ELECTRONICS WORLD

+ WIRELESS WORLD

Denmark DKr. 70.00
Germany DM 15.00
Greece Dra.760
Holland DFl. 14
Italy L. 7300
IR £3.30
Spain Pts. 780
Singapore S$ 12.60
USA $6.70

SOR DISTRIBUTION

A REED BUSINESS PUBLICATION

SEPTEMBER 1992 £1.95

BROADCAST

Standards for the 21st century

APPLICATIONS

Single chip Nicam demodulator

DESIGN

Digitally controlled audio preamplifier

REVIEW

Ultimate is the ultimate in EDA?

ENGINEERING

Cookbook for FIR filter design

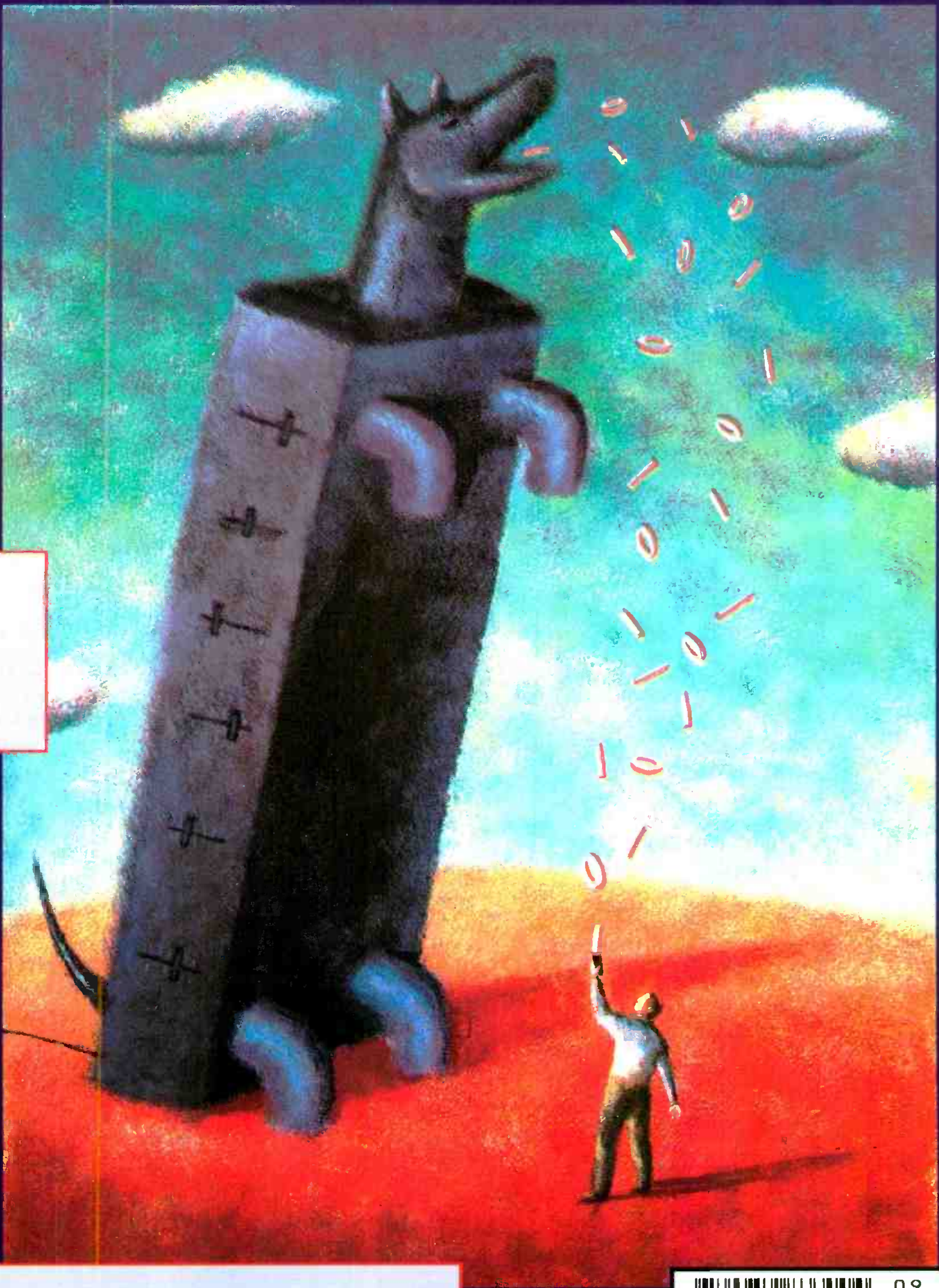

FREE: Fully working *Easytrax 2* PCB layout software

09
9 770959 833004

Dataman's new S4 programmer costs £495
You could have one tomorrow on approval*

If you've been waiting for S4 we have some good news. It's available now. S4 is the 1992 successor to Dataman's S3 programmer, which was launched in 1987. The range goes back through S2, in 1982, to the original Softy created in 1978.

Like its predecessors, Softy4 is a practical and versatile tool with emulation and product development features. S4 is portable, powerful and self-contained.

Design and manufacture are State of the Art. S4 holds a huge library of EPROMS, EEPROMS, FLASH and One Time Programmables. Software upgrades to the Library are free for the life of the product, and may be installed from a PROM by pressing a key. *S4 makes other programmers seem oversized, slow and outdated.* S4 is now the preferred tool for engineers working on microsystem development.

Battery Powered

S4 has a rechargeable NICAD battery. On average, you can do a week's work without recharging. On a single charge, up to a thousand PROMS can be programmed – and charging is fast: it only takes an hour. Normal operation can continue during the charging process.

Continuous Memory

Continuous Memory means never losing your Data, Configuration or Device Library. You can pick up S4 and carry on where you left off, even after a year on the shelf. If the NICAD battery loses all of its charge, RAM contents are preserved by the LITHIUM backup battery.

Remote Control

S4 can be operated via it's RS232 Serial Port. The standard D25 socket connects to your computer. Using batch files or a terminal program, all functions are available from your PC keyboard and screen.

Free Terminal Program

You could use any communications software to talk to S4. But the Terminal Driver program, which we include free, is the best choice. It has Help Screens to explain S4's functions and it sends and receives at up to 115200 baud – that's twelve times as fast as 9600 baud. At this speed a 64 kilobyte file downloads in 9 seconds. There is a memory resident (TSR) option too, which uses only 6k of your precious memory, and lets you "hot key" a file to S4. Standard *upload* and *download* formats include: ASCII, BINARY, INTELHEX, MOTOROLA and TEKHEX.

S4 loads its Library of programmables from a PROM in its socket, like a computer loads data from disk. Software upgrades are available free. Download the latest Device Library from our Bulletin Board.

Microsystem Development

With S4 you can develop and debug microsystems using Memory Emulation. This is an extension of ROM emulation, used for prototype development, especially useful for single-chip "piggy back" micros. When you unpack your S4 you will find an Emulator Lead with a 24/28/32 pin DIL plug and a Write Lead with a microhook. Plug the EMULead in place of your ROM. Hook the Write-Lead to your microprocessor's write-line. Download your assembled code into S4. Press the EMULate key and your prototype runs the program. S4 can look like ROM or RAM, up to 512K bytes, to your target system. Access-time depends on S4's RAM. We are currently shipping 85ns parts.

CIRCLE NO. 101 ON REPLY CARD

Your microprocessor can *write* to S4 as well as *read*. If you put your *variables* and *stack* in S4's memory space, you can inspect and edit them. You can write a short monitor program to show your *internal registers*.

S4's memory emulation is an inexpensive alternative to a full MDS and it works with any microprocessor. Many engineers prefer it because their prototype runs the same code that their product will run in the real world.

Dimensions & Options

S4 measures 18 x 11 x 4 cm and weighs 520 grams. 128k x 8 (1MB) of user memory is standard, but upgrading to 512k x 8 is as easy as plugging in a 4MB low-power static CMOS RAM.

The stated price includes Charger, EMUlead, Write Lead, Library ROM, Terminal Driver Software with Utilities and carriage in U.K. but not VAT.

*Money-back Guarantee

We want you to buy an S4 and use it for up to 30 days. If it doesn't meet with your complete approval you will get your money back, immediately, no questions asked.

Access VISA

Call us with your credit card details. Stock permitting, we are willing send goods on 30 days sale-or-return to established U.K. companies on sight of a legitimate order.

Customer Support

Dataman's customer list reads like Who's Who In Electronics. Dataman provides support, information interchange, utilities and latest software for S4, S3, Omni-Pro and SDE Editor-Assembler on our Bulletin Board which can be reached at any time, day or night.

DATAMAN tools for microengineering

Station Road MAIDEN NEWTON
Dorset DT2 0AE United Kingdom
Phone 0300-20719
Fax 0300-21012
Telex 418442
BBS 0300-21095
Modem 12/24/96 V32 HST N,8,1

CONTENTS

FEATURES

COVER: DIGITALLY CONTROLLED AUDIO PREAMPLIFIER 718
Digital control needn't compromise audio quality. Chris Miller shows how to drive an all function preamplifier from a low cost microcontroller using the Philips I^2C bus.

LIBRARIES LEND AUTHORITY TO CAD PACKAGE 725
Powerful schematic capture and PCB layout software can be let down by inadequate libraries or poor documentation. Martin Cummings finds no such drawbacks with *Ultimate*.

BROADCAST TECHNOLOGY TUNES TO A DIFFERENT PROGRAMME 730
Widescreen, mac, pal or...? Barry Fox reports from the IBC on how broadcasters are facing an unprecedented number of technical decisions.

PHOTO CD: DIGITAL IMAGING ON THE HIGH STREET 739
Linking conventional photography with digital processing is set to burst open a mass market for electronic imaging. George Cole pictures Kodak's new *Photo CD* technology – and sees what else is moving the still video sector.

DIRECT DIGITAL SYNTHESIS...746
DDS can provide regular small frequency increments with minimum discrete components directly from a high frequency clock signal. Unlike phase lock synthesisers, DDS noise sidebands vary with frequency increment. Ian Hickman shows how to predict system performance.

GOING LINEAR WITH POWER MOSFETS..778
A mosfet's behaviour depends on the source-drain voltage. High drain voltages produce an electrostatic field which affects both channel conductance and the resulting device transfer characteristic. In the concluding part of his article Terence Finnegan completes his examination of the operation of power mosfets from first principles.

REGULARS

COMMENT 707
Have you considered writing for us?

UPDATE 708
IBM, Siemens and Toshiba enter into research pact for 256M drams; MAC fades out of the picture; HSE denies health risk to VDU workers; Neural chips for speech recognition.

RESEARCH NOTES...712
Chip defects waiting to happen. Wiring up the electric earth. Rolling out the led. Electronics gets the measure of diabetes. Giant magnetoresistance comes closer to exploitation. Desk bottom computing – less stressful than desktop.

CIRCUITS, SYSTEMS & DESIGNS 751
Simplify FIR-filter design with a cookbook approach

LETTERS 758
Mixing it. Concepts and cultures. Putting correct numbers into HDTV. View through the smog. Satellite solutions. Virtuous m-derived filter. Calling all RFI sufferers. Digital redundancy. Brickwall filters...., ...interesting but.... ... not convincing. Museum musings.

CIRCUIT IDEAS 763
Inverting audio amplifier. Analogue A-to-D converter. Fast full-wave rectifier. Metal detector. 1:1 square waves with 2ns edges. Gated oscillator ignores input noise. RC attenuator distortion.

NEW PRODUCTS 767
EW + WW's round-up of all that's new in electronics and engineering software.

DESIGN BRIEF 772
Ian Hickman puts to work a unique A-to-D converter capable of taking an instantaneous snapshot of the voltages on all its eight inputs.

APPLICATIONS..784
Single-chip Nicam 728. Op-swaps. Uses for varactors. 1GHz receiver front end.

In next month's issue. The RF Design Revolution. Many functions in electronics increasingly depend on RF technology: mainstream applications such as mobile radiocomms are being joined by cordless office equipment. Cellular telephones, pagers and computer networks couldn't work without a new generation of specialised semiconductors, many of which are intended to reduce the engineering and design skill required of the system designer. Tim Stanley begins a major new series on working with the new RF components.
In the **OCTOBER** issue, on sale **September 24**

FROM CONCEPT TO ARTWORK IN 1 DAY

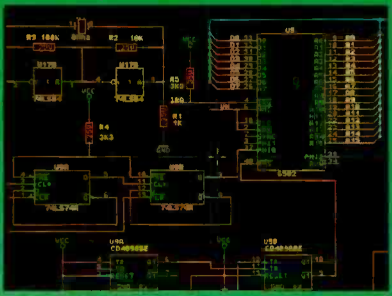

Your design ideas are quickly captured using the ULTIcap schematic design Tool. ULTIcap uses REAL-TIME checks to prevent logic errors. Schematic editing is painless; simply click your start and end points and ULTIcap automatically wires them for you. ULTIcap's auto snap to pin and auto junction features ensure your netlist is complete, thereby relieving you of tedious netlist checking.

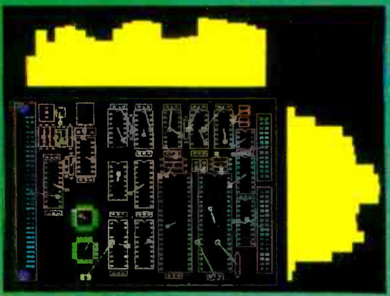

ULTIshell, the integrated user interface, makes sure all your design information is transferred correctly from ULTIcap to ULTIboard. Good manual placement tools are vital to the progress of your design, therefore ULTIboard gives you a powerful suite of REAL-TIME functions such as, FORCE VECTORS, RATS NEST RECONNECT and DENSITY HISTOGRAMS. Pin and gate swapping allows you to further optimise your layout.

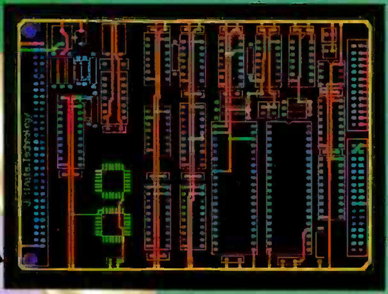

Now you can quickly route your critical tracks. ULTIboard's REAL-TIME DESIGN RULE CHECK will not allow you to make illegal connections or violate your design rules. ULTIboard's powerful TRACE SHOVE, and REROUTE-WHILE-MOVE algorithms guarantee that any manual track editing is flawless. Blind and buried vias and surface mount designs are fully supported.

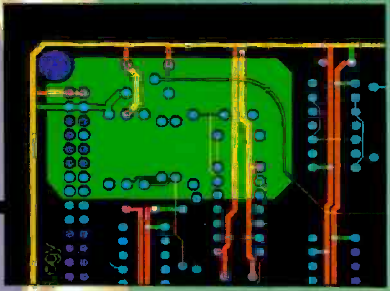

If you need partial ground planes, then with the Dos extended board systems you can automatically create copper polygons simply by drawing the outline. The polygon is then filled with copper of the desired net, all correct pins are connected to the polygon with thermal relief connections and user defined gaps are respected around all other pads and tracks.

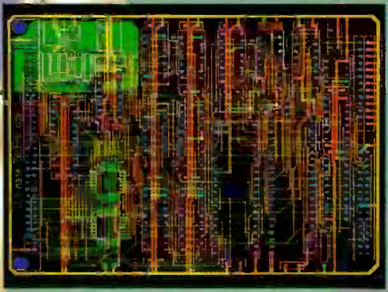

ULTIboard's autorouter allows you to control which parts of your board are autorouted, either selected nets, or a component, or a window of the board, or the whole board. ULTIboard's intelligent router uses copper sharing techniques to minimise route lengths. Automatic via minimisation reduces the number of vias to decrease production costs. The autorouter will handle up to 32 layers, as well as single sided routing.

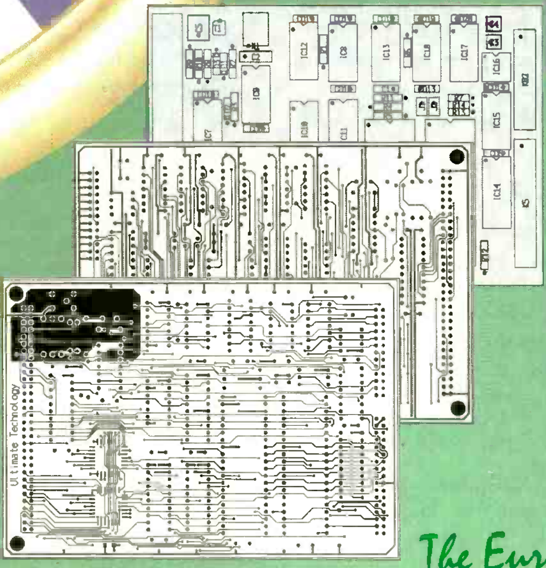

ULTIboard's backannotation automatically updates your ULTIcap schematic with any pin and gate swaps or component renumbering. Finally, your design is post processed to generate pen / photo plots, dot matrix/laser or postscript prints and custom drill files.

CIRCLE NO. 106 ON REPLY CARD

NEW

ULTIboard/ULTIcap evaluation system:
- **all** features of the bigger versions
- full set of manuals
- design capacity 350 pins

Price incl. S & H, excl. VAT: **£ 75**

Purchase price is 100% credited when upgrading to a bigger version. • *Also suitable for study & hobby*

ULTIboard PCB Design/ULTIcap Schematic Design Systems are available in low-cost DOS versions, fully compatible with and upgradable to the 16 and 32 bit DOS-extended and UNIX versions, featuring unlimited design capacity.

The European quality alternative

ULTICAP + ULTIBOARD = MAXIMUM PRODUCTIVITY

ULTImate Technology UK Ltd. • 2 Bacchus House, Calleva Park, Aldermaston Berkshire RG7 4QW • Fax: 0734 - 815323 • Phone: 0734 - 812030

EDITOR
Frank Ogden
081-652 3128

DEPUTY EDITOR
Jonathan Campbell
081-652 8638

CONSULTANT
Derek Rowe

DESIGN & PRODUCTION
Alan Kerr

EDITORIAL ADMINISTRATION
Lorraine Spindler
081-652 3614

ADVERTISEMENT MANAGER
Jan Thorpe
081-652 3130

SALES MANAGER
Shona Finnie
081-652 8640

CLASSIFIED SALES EXECUTIVE
Pat Bunce
081-652 8339

ADVERTISING ADMINISTRATION
Kathy Lambart
081-652 3139

ADVERTISING PRODUCTION
Shirley Lawrence
081-652 8659

PUBLISHER
Robert Marcus

FACSIMILE
081-652 8956

CLASSIFIED FACSIMILE
081-652 8931

Hoping to read you

Have you considered writing for *EW + WW*? We are continually looking for interesting, occasionally eccentric contributions to our pages. Nearly everyone has a gem to pass on be it electronic circuit design or heretical science. I have put together a few hints which might be of help to prospective authors.

When writing a magazine article, presentation is everything. You may have the greatest story ever told within your grasp but unless it can be conveyed clearly and simply to the reader, few will read it.

There is another requirement for successful authorship. The aim must be to present material in a way which appeals to the complete audience, not just a small sector. Please assume that potential readers will be equipped with little more than scientific curiosity about your chosen speciality. Consider carefully the basic point of the article which you wish to convey and then support it with the necessary explanatory structure.

There is a great temptation to resort to mathematics for supporting argument. Don't do it. Although maths is the language of science, words are the language of magazines. Algebra deters more people than it helps. However, if you must use it, be sure to explain and quantify the terms. In general, find another way of making the point.

Remember that you are not writing for a learned journal; authors often forget that most readers get a stack of free technical magazines at their office. Our words should represent entertainment as well as information. Please guard against deliberately attempting to impress readers with your knowledge. The expertise of the author is self-evident in a well written article.

How long should the script be? The answer is "as short as possible" provided that what you have written conveys both the essential point and the structure to get it across. Items longer than 2500 words are the exception. Please consult us if you wish to exceed this.

Please avoid a "sea of words". All magazine material benefits from extensive use of graphics and pictures. An annotated and captioned drawing on the back of an envelope is better than no drawing at all. Technical articles should be supported with block diagrams and detailed circuit diagrams as appropriate.

Pictures serve a different function in magazine presentation. Although they may be used to illustrate a particular point, their main purpose is to draw the reader into the words which surround them. The picture subject matter can (and often should be) lateral to the main thrust of the article. The purpose of the caption, which should always accompany a submitted picture, is to serve as a bridge between the two. It should not spell out what is already obvious from the content of the picture.

Explanatory text boxes broaden article appeal. Each box, around 200 to 500 words, explain ancillary aspects of the main theme without disturbing article flow. As with pictures, the subject matter of the text boxes should be lateral to the main content of the article.

Use active sentence constructions where possible and avoid excessive use of the verbs "to have" and "to be" . In short, don't waste words.

Please don't be deterred by these guidelines; we appreciate that engineers aren't professional writers and that an interesting point remains so even if ineptly expressed.

Please submit copy on disk if at all possible. We can cope with almost any word processor format (IBM or Mac) although we prefer files in straight ascii without carriage returns.

Hoping to read you soon.

Frank Ogden

ARE WE HARD TO GET?

Just one phone call to our Circulation Actionline brings instant assistance.

Some readers have experienced problems in finding copies of *EW+WW* on newstrade shelves - so we've decided to do something about it.. If you have any difficulty purchasing your copy, call our Circulation Actionline. We will follow up your complaint and, more importantly, make sure yon can obtain your copy.

Call Kathy Lambart on 081-652 3139 and let us tackle your supply problems

REED BUSINESS
PUBLISHING
GROUP

Electronics World + Wireless World is published monthly By post, current issue £2.25, back issues (if available) £2.50. Orders, payments and general correspondence to **L333, Electronics World + Wireless World, Quadrant House, The Quadrant, Sutton, Surrey SM2 5AS.** Telex 892984 REED BP G Cheques should be made payable to Reed Business Publishing Group.
Newstrade: IPC Marketforce, 071 261-6745.
Subscriptions: Quadrant Subscription Services, Oakfield House, Perrymount Road, Haywards Heath, Sussex RH16 3DH. Telephone 0444 441212. Please notify a change of address. Subscription rates 1 year (normal rate) £30 UK and £35 outside UK.
USA: $116.00 airmail. Reed Business Publishing (USA), Subscriptions office, 205 E. 42nd Street, NY 10117.
Overseas advertising agents: France and Belgium: Pierre Mussard, 18-20 Place de la Madeleine,Paris 75008. United States of America: Ray Barnes, Reed Business Publishing Ltd, 205 E. 42nd Street, NY 10117.Telephone (212) 867-2080. Telex 23827.
USA mailing agents: Mercury Airfreight International Ltd Inc, 10(b) Englehard Ave, Avenel NJ 07001. 2nd class postage paid at Rahway NJ Postmaster. Send address changes to above.

IBM, Siemens, Toshiba in research pact

Siemens, IBM Toshiba have joined forces to develop advanced semiconductor devices for the end of this decade and into the next century.

The three companies will cooperate in development of a 256M dram and its process engineering. The submicron technology will be a basis for production of future generations of highly dense chips.

Work will commence immediately at IBM's Advanced Semiconductor Technology Centre, about 70 miles north of New York City using workers recruited from the three companies. Siemens and Toshiba will also conduct project-related activities at their own facilities. The development team will focus on the process technology for fabricating features of 0.25μm – 400 times narrower than a human hair.

At the peak of the development phase, more than 200 researchers will support the effort.

The three-way alliance is an outgrowth of separate relationships among the companies. Siemens and IBM currently work together in 16Mb dram manufacturing and 64Mb dram development. A joint venture between IBM Japan and Toshiba produces flat panel computer displays. More recently, IBM and Toshiba signed a flash memory technology agreement. Siemens and Toshiba have been collaborating in various semiconductor areas, including 1Mb drams, standard cells, and gate arrays.

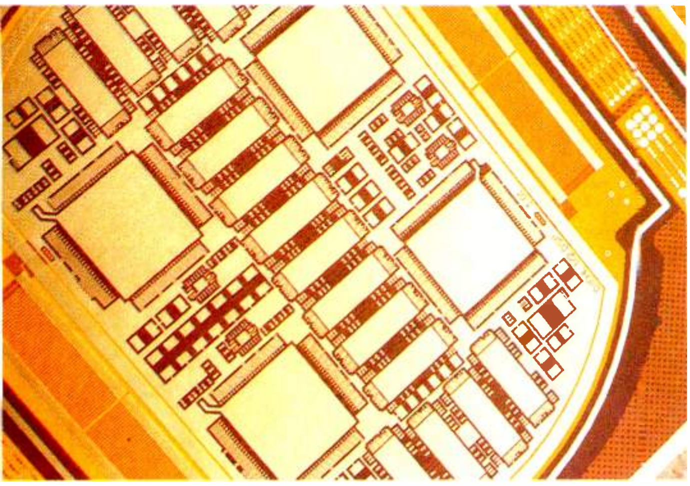

Thinly sliced... This digital signal processing multichip module (MCM) is made using a new Swiss developed technology which promises to slash the costs of MCM and complex multilayer printed circuit board production. By combining a thin flexible copper-coated plastic substrate material with semiconductor making plasma etching techniques for drawing conductive paths and drilling holes, Swiss firm Dyconex can increase PCB interconnection density by a factor of 20 or even 30. Unlike conventional PCBs, the copper coated plastic foil substrate does not generate the dust which ruins yields on densely packed boards. This MCM uses a four layer structure on a copper-molybdenum base.

Mac fades out of picture

Breakthroughs in digital high definition television transmission and pal-plus enhanced TV appear to have put the final nails in the coffin of the mac route to HDTV.

Swedish Telecom has successfully transmitted 1250 line high definition digital pictures over a standard European 8MHz terrestrial UHF TV channel.

Project leader Erik Stare believes the system proves that digital HDTV is technically possible well before the end of the decade.

European broadcasters have also carried out transmissions of pal-plus widescreen enhanced definition pictures from a transmitter in Holland. This means terrestrial broadcasters can transmit pal-plus from their existing transmission infrastructure with virtually no modifications.

Swedish Telecom's HD-Divine (Digital Video Narrowband Emission) system uses a hybrid coding technique to compress a 900 Mbit/s HDTV signal into a 24 Mbit/s channel with very little drop in picture quality.

Transmission uses 16-qam (quadrature amplitude modulation) to squeeze 4-bits of information into each Hz of bandwidth. Orthogonal frequency division multiplexing spreads the signal over the bandwidth in such a way as to minimise interference with pal transmissions.

The combination of pal-plus in the short to medium term and digital HDTV before the end of the decade seems to have pulled the rug from under the mac programme.

Philips has already begun pal-plus chip development and expects to have a working chipset ready next year. Full IBC report on p730.

Computer that smells success

An experimental neural network computer which Bellcore researchers are developing at its Morristown, N.J. lab can learn and process patterns at more than 100,000 signals each second, a speed about ten thousand times faster than a typical workstation. Bellcore hopes that it may eventually be able to identify spoken words, read handwriting, identify fingerprints and recognize a smell.

The Bellcore machine relies on an experimental chip which the research centre first produced in 1988. Like that chip, the more advanced version contains interconnected circuits which were inspired by the neural processes of the human brain.

On a much smaller scale, the advanced chip processes information by using electronic equivalent of 496 synapses and 32 neurons. The technology is based on the Boltzmann algorithm, a physical-oriented computation involving thermal noise. In order to prevent the chip from getting stuck during the decision-making process, on-chip noise generators prod neurons with electronic noise, encouraging the chip to make a good decision.

The experimental chip is cascadable, allowing it to be linked with similar chips. Eventually, this could provide a computer prototype incorporated into a large system able to process even more information faster.

Bellcore researchers will add additional chips to their prototype computer to create an experimental neural learning computer that will help solve problems faced in telecommunications network management and operation systems. These include assigning frequencies to wireless equipment, routing telephone calls, compressing telephone company business data for storage and transmission. It will be especially practical in assessing frequencies in cellular telephone systems. Another likely area includes signal processing for the equalisation of telephone and fibre optic lines.

A San Jose based company has already brought out a product using an integrated electronic retina directly coupled to a neural net which instantly recognises the magnetic characters printed on the bottom of cheques, even if the print quality is poor.

The neural network chip was developed by Synaptics Inc also of San Jose and "represents a tiny fraction of what we will eventually be able to do with neural networks" claims semiconductor industry veteran Federico Faggin, co-founder and CEO of Synaptics.

Martin Cheek

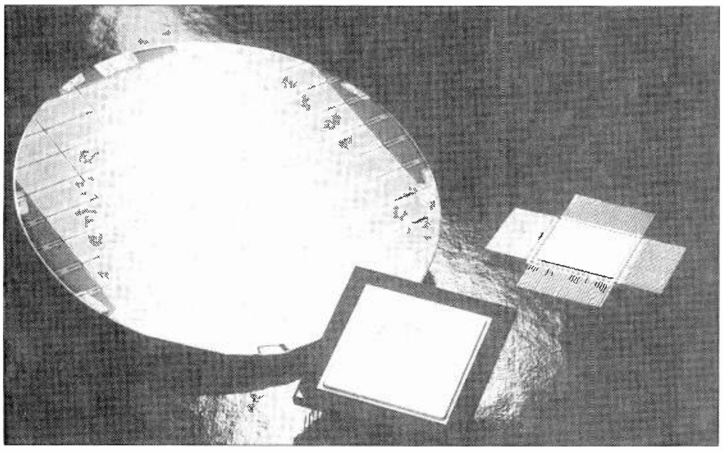

Asics with 3000 – 30,000 gates, and gate delays as low as 80ps, are currently being fabricated on 4in GaAs wafers at Fujitsu's new $200 million "Quantum" fabrication plant at Yamanashi, Japan.

New survey highlights UK manufacturing decline

An underqualified workforce, a loss of national innovative capability and a very uneven spend on R&D are just a few of the reasons for the worrying decline in UK Manufacturing, says a new report.

Other problems identified by the IEE survey include: a shortage of strong medium sized companies and a sometimes unsatisfactory balance of interests between shareholders, managers and workforce. The report also recommends further action to improve the overall quality of management in the UK manufacturing sector.

The report entitled *UK Manufacturing – A survey of surveys and a compendium of remedies* has been compiled by Professor Jack Levy. Manufacturing is the largest single element of the UK's economy. Its continuing decline is therefore a cause for considerable concern, especially within the electronics industry. The last few years have seen the publication of a number of highly significant reports on the problem including those by the CBI, the House of Lords Select Committee on Science and Technology, the EEF and the DTI. Professor Levy's findings are all the more important because his work draws together and directly compares the views expressed separately by each of these authoritative bodies.

Solid blue laser

Researchers at Sony claim to have made a blue semiconductor laser that will eventually allow much greater optical disk capacity.

The density at which the data can be packed onto an optical disk is limited by the wavelength of the light in the reader mechanism. Lasers currently use red or infrared light. A blue light laser could allow up to three times as much data to be stored on a comparatively sized disk.

The laser was produced using a material composed from magnesium and zinc selenide. Commercially viable product is still some years away: the laser can only operate at sub-zero temperatures

Recordable CD available soon

A recordable CD player aimed at the consumer market is likely to be launched next year priced at around £800.

Philips is believed to be timing the launch so as to block Sony's proprietary recordable disc system, *Mini Disc*, due to reach the market in December. Philips hopes this will leave the way clear for its digital tape technology, digital compact cassette which it hopes will take over from analogue audio cassettes.

The consumer recordable CD is based on the same write-once technology used in professional CD-R machines. The disc has a special dye layer which turns dark when struck by a laser beam of sufficient energy.

A Sony spokesman commented that consumers would not tolerate a system that could only record once, leaving no room for error.

DAB from space

The BBC will be carrying out research into distributing dab signals to terrestrial transmitter sites over the next nine months and will examine the potential for satellite delivery of dab for public reception. Research will also be carried out using the Olympus satellite into aspects of picture scrambling systems and the distribution of digital television.

This work will be carried out by BBC Engineering Research Department at Kingswood Warren, Surrey. BBC Transmission will carry out the overall co-ordination of this work and will also operate the ESA uplink earth station feeding the Olympus transponder.

FREE: Easytrax 2

Here is your opportunity to acquire a fully working version of Protel Technology's Easytrax 2 PCB layout software as reviewed in *EW + WW* October 91 absolutely free. Simply complete the professional services reply card located between pages 760 and 761 to receive your HD 5.25in self extracting program disk.

This offer, arranged in conjunction with JAV Electronics Ltd, does not include the paperback instruction manual, normal price £50. Copies are available to *EW + WW* readers at a discounted price of £40 directly from JAV although the software does include a printable instruction file.

Please note that JAV Electronics is handling all aspects of this offer.

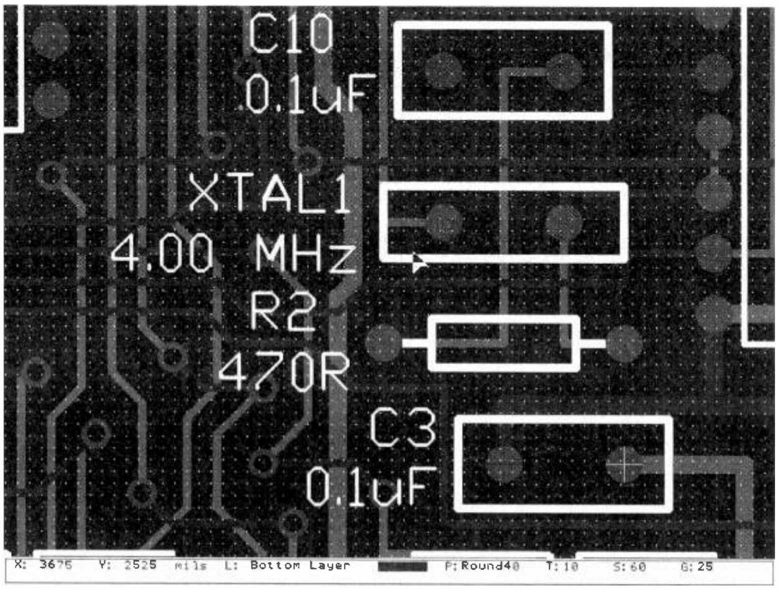

"No health risk to VDU workers"

Pregnant women who work with visual display units are not at increased risk of miscarrying. This is the main finding of newly published research sponsored mainly by the Health and Safety Executive.

Commenting on the study, Dr Colin Mackay, chief ergonomist at the HSE, said: "This research, the first of its kind to be carried out on a UK working population, was specifically designed to investigate the alleged increased incidence of spontaneous abortion in women exposed to VDUs at work."

Some 450 pregnant women participated in the study. It shows that pregnant women who work, even habitually, at VDUs are not at increased risk of miscarriage.

Dr Eve Roman, who led the study, said: "We found it made no difference whether a woman worked on a VDU as part of her general day, whether she just used it occasionally or whether her only contact with a VDU was that it happened to be in the same room."

In recent years there has been much speculation and concern that working with VDUs may cause birth defects, miscarriage and other adverse reproductive effects.

The study *Spontaneous Abortion and Work with Visual Displays Units* is published in the *British Journal of Industrial Medicine* vol. 49, issue No. 7.

RF MODULAR EQUIPMENT

LOW NOISE GASFET PREAMPLIFIERS
Two-stage Gasfet preamplifiers High Q filters Masthead or local use
TYPE 9006 Tuned to your specified frequency in the range 5–250MHz NF 0 6dB. Gain 10–40dB variable. 50 ohms. £96
TYPE 9006FM As above. Band II 88–108MHz 75 ohms £99
TYPE 9002 Tuned to your specified channels in bands IV or V NF 0.7dB. Gain 25dB adjustable 75 ohms £128
TYPE 9004 Aligned to your specified frequency in the range 250–1000MHz NF 0 7dB. Gain 25dB adjustable 50 ohms £128
TYPE 9035 Mains power supply for above amplifiers. £58
TYPE 9010 Masthead weatherproof unit for above amplifiers £16

WIDEBAND AMPLIFIERS
Monolithic microwave integrated circuits in a fully packaged microstrip format Full-wave shottky diode protected inputs Temperature compensated bias circuitry Internal voltage regulation
TYPE 9301 100kHz–500MHz. NF 2dB at 500MHz. Gain 30dB Power output +12 5dBm, 18mW £165
TYPE 9302 10MHz–1GHz NF 2dB at 500MHz Gain 30dB Power output +12 5dBm, 18mW £165
TYPE 9008 Gasfet 10MHz–2GHz NF 2 5dB at 1GHz. Gain 10dB Power output +18dBm, 65mW £165
TYPE 9009 Gasfet 10MHz–2GHz NF 3.8dB at 1GHz Gain 20dB Power output +20dBm, 100mW £185

PHASE LOCKED LOOP FREQUENCY CONVERTER
TYPE 9115 Converts your specified input channels in the range 20–1000MHz to your specified output channels in the range 20–1000MHz. Minimum input to output separation 10 channels 1mV input, 10mW output (+10dBm) Low-noise Gasfet front end NF 0 7dB AGC controlled Gain 60dB adjustable −30dB Will drive transmitting amplifiers directly. £550

PHASE LOCKED SIGNAL SOURCES
TYPE 8034 Frequency as specified in the range 20–250MHz Output 10mW £195
TYPE 9036 Frequency as specified in the range 250–1500MHz Output 10mW £291

FM/FSK EXCITERS
TYPE 9282 Frequency as specified in the range 20–1500MHz Output 10mW Deviation up to ±75kHz £348

TELEVISION TRANSMITTER
TYPE 9550 Single channel Bands I, III, IV or V PAL B, G or I 50W output 1V composite video input Output protection Power meter Integral cooling and power supply £4950

RF LINEAR POWER AMPLIFIERS
Tuned to your specified frequency in the range 20–250MHz or your specified channels in bands I or III 28V + DC supply.
TYPE 9105 10mW input, 3 watts output £275
TYPE 9106 500mW input, 10 watts output £341
TYPE 9155 3 watts input, 30 watts output £460
TYPE 9458 5 watts input, 50 watts output Integral forced air cooling and output transistor protection £750

UHF LINEAR POWER AMPLIFIERS
Tuned to your specified frequency in the range 250–470MHz 28V + DC supply
TYPE 9213 300mW input, 3 watts output. £350
TYPE 9124 2–3 watts input, 25 watts output. £484

TELEVISION EXCITER
TYPE 9269 Phase locked loop vestigial sideband miniaturised television modulator with sound channel RF output 10mW on your specified frequency in the range 40–1000MHz or channel in bands I, III, IV or V. £650

TELEVISION LINEAR POWER AMPLIFIERS
Tuned to your specified channels in bands IV or V. 28V + DC supply
TYPE 9252 10mW input, 500mW output £308
TYPE 9259 500mW input, 3 watts output £352
TYPE 9262 500mW input, 10 watts output £638
TYPE 9263 2–3 watts input, 15 watts output £484
TYPE 9266 10 watts input, 50 watts output Integral forced air cooling and output transistor protection £1919

LINEAR POWER AMPLIFIERS 800–1000MHz
Tuned to your specified frequency in the range 800–1000MHz
TYPE 9265 500mW input, 10 watts output £484
TYPE 9264 2 watts input, 25 watts output. £840

WIDEBAND LINEAR POWER AMPLIFIERS
TYPE 9306 10MHz–1GHz Gain 15dB. Output +30dBm, 1 watt £438
TYPE 9246 1 watt output 100kHz–175MHz 13dB gain. £182
TYPE 9247 4 watts output. 1–50MHz. 13dB gain £204
TYPE 9051 4 watts output 20–200MHz 13dB gain £204
TYPE 9176 4 watts output. 1–50MHz 26dB gain £314
TYPE 9177 4 watts output. 20–200MHz 26dB gain. £314
TYPE 9173 20 watts output 1–50MHz. 17dB gain. £374
TYPE 9174 20 watts output 10–160MHz 10dB gain. £374
TYPE 9271 40 watts output 1–50MHz 16dB gain. £748
TYPE 9172 40 watts output 10–160MHz 10dB gain. £748

Prices exclude p&p and VAT

RESEARCH COMMUNICATIONS LTD
Unit 1, Aerodrome Industrial Complex, Aerodrome Road, Hawkinge, Folkestone, Kent CT18 7AG
Tel: 0303 893631 Fax: 0303 893838

CIRCLE NO. 107 ON REPLY CARD

EASY-PC PCB and Circuit Diagram CAD

Forget using tapes and lightbox! Create your Circuit Boards using CAD - like the professionals.

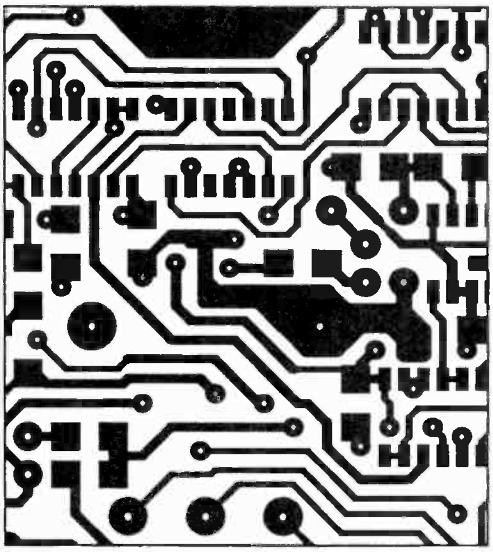

- Runs on PC/XT/AT etc. with Hercules, CGA, EGA or VGA display and many DOS emulations.
- Design Schematics Single and Double sided and Multilayer boards including Surface Mount.
- Standard output includes Dot Matrix / Laser / Inkjet Printer, Pen Plotter, Photo-plotter and N.C. Drill.
- Extremely powerful.
- Very easy to use.

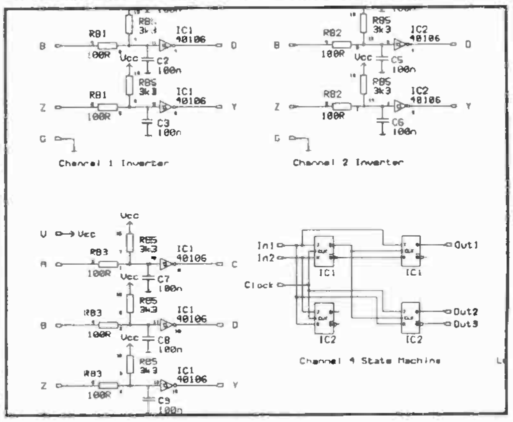

EASY-PC

Technical support is free, for life!

Only £98.00!
Plus P&P+VAT

Over 13,000 Installations in 70 Countries Worldwide!

Options:-500 piece Surface Mount Symbol Library £48, 1000 piece Symbol Library £38, Gerber Import facility £98.

DIGITAL SIMULATION £195

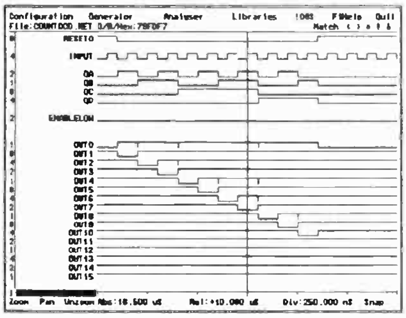

- At last! A full featured Digital Circuit Simulator for less than £1000!
- PULSAR allows you to test your designs without the need for expensive test equipment.
- Catch glitches down to a pico second per week!
- Includes 4000 Series CMOS and 74LS Libraries. 74HC/HCT libraries only £48.00 each.
- Runs on PC/XT/AT/286/386/486 with EGA or VGA.

ANALOGUE SIMULATION £195

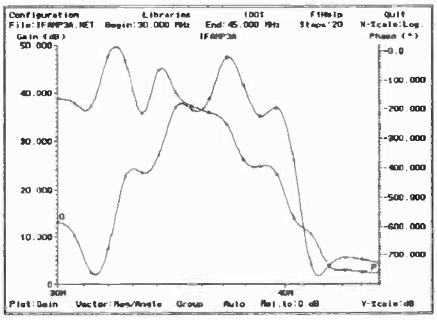

- NEW powerful ANALYSER III has full graphical output.
- Handles R's,L's,C's, Bipolar Transistors, FET's, OP-amp's, Tapped and Untapped Transformers, and Microstrip and Co-axial Transmission Lines.
- Plots Input / Output Impedance, Gain, Phase & Group Delay.
- Covers 0.001 Hz to > 10GHz
- For PC/XT/AT/286/386/486 with EGA or VGA.
- Very fast computation.

SMITH CHART CAD £195

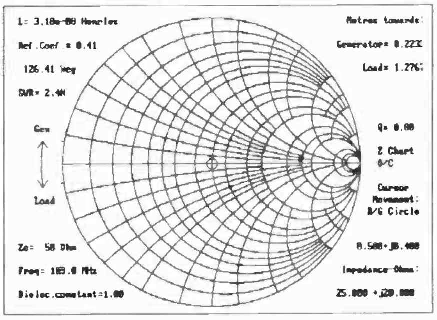

- Z-MATCH II simplifies RF matching and includes many more features than the standard Smith Chart.
- Handles transmission line transformers, stubs, discrete components, S Parameters etc.
- Supplied with many worked examples.
- Superbly easy to learn and use.
- Runs on IBM PC/XT/AT/386/486, CGA,EGA,VGA.
- Ideal for Education and Industry.

For full info Phone, Fax, or use enquiry card!

Number One Systems Ltd. 1

- TECHNICAL SUPPORT FREE FOR LIFE!
- PROGRAMS NOT COPY PROTECTED.
- SPECIAL PRICES FOR EDUCATION.

REF: WW, HARDING WAY, ST.IVES, HUNTINGDON, CAMBS, ENGLAND, PE17 4WR.
Telephone: 0480 61778 (7 lines) Fax: 0480 494042
International: +44 -480-61778, Fax: +44-480-494042 ACCESS, AMEX, MASTERCARD, VISA Welcome.

CIRCLE NO. 108 ON REPLY CARD

REGULARS

RESEARCH NOTES

Chip defects waiting to happen

Greater likelihood of chip defects is an unfortunate, but inevitable, consequence of ever-smaller circuit elements. But faulty manufacture is not always to blame. Many defects that develop during the working life of a chip are the result of electro-migration – the tendency of atoms to move out of place – and research is showing that this can be as violent and destructive as mechanical deformation. Added to this, tinier conductors and higher current densities mean migration is much more likely to happen than before and because of the tiny clearances the device is more likely fail.

What happens is that the movement of atoms, especially in metal conductors, creates voids in the film which then coalesce and reduce the amount of conductor left to carry the current. That in turn increases the current density, accelerating the process until the conductor eventually melts.

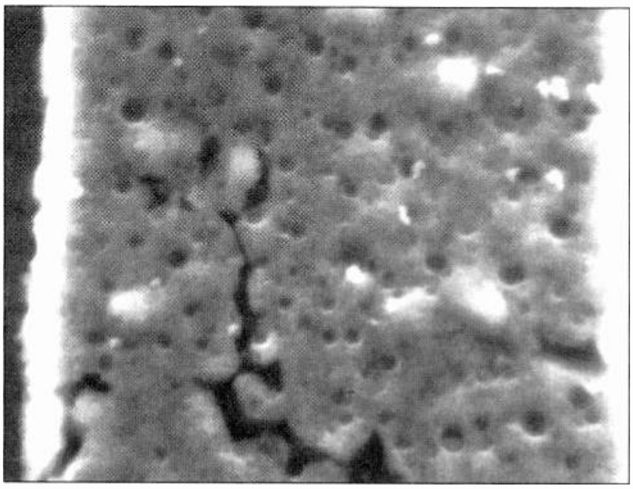

Voids formed in the thin metal conductors used in microcircuits, seen through an electron microscope. Such voids can increase the current density, inducing failure during operation.

According to Dr Bill Livesay, who's researching this problem with a team at Georgia Tech Research Institute in Atlanta, it is not just that conductors get thinner. Problems can also result when the displaced atoms migrate through the film and stack up as hillocks and whiskers, leading to short-circuits.

Livesay's team is currently using powerful electron microscopy techniques to study the growth of these hills and voids. They believe that atoms are displaced by electro-migration in much the same way that atoms move when materials are mechanically deformed.

Mechanical deformation occurs when soft metals are stretched, bent or hammered. Dislocations occur at the microscopic level and atoms are massively displaced. Electro-migration, according to Livesay, is just as violent and operates in much the same way. Up until now it has been generally assumed that high density currents merely cause a gentle drift of atoms along grain boundaries.

Gathering evidence to prove that dislocations are a major factor in electro-migration has formed a large part of this recent research at GTRI. Livesay and his group say that the clinching evidence came from studies of aluminium films using a transmission electron microscope. When high current pulses were applied to the films, dislocations could be observed moving through the aluminium.

Confirmation of this has come from Russian scientists working on copper films and from other groups using acoustic pulses to observe the growth of hillocks from the transmigrating atoms.

The practical value of this research clearly lies in the possibility of re-designing circuit elements to minimise electro-migration, or at least to mitigate its effects. Livesay suggests that the use of alloys or multiple layer conductors could have a substantial effect on this.

Wiring up the electric earth

Surface measurements suggest that the rocks forming the deeper parts of the Earth's crust conduct electricity far more strongly than is evident from the results of laboratory measurements on similar rocks found loose. To explain this, researchers have speculated that the rocks in the lower part of the crust may be "wired up" with films of graphite or, more probably, films of mineral salts in solution.

In a recently published report *[Nature Vol 357 No 6380]*, Marianne Mareschal and her colleagues of the Ecole Polytechnique in Montreal have revealed the presence of graphite in the grain structure of Canadian rocks which, although now on the surface, originally formed thousands of millions of years ago in the lower crust at a depth of about 20km.

As well as graphite, the researchers have found traces of chlorine, iron and sulphur, which may be the residues of subterranean brines. The brines, they say, may have played a small part in enhancing the conductivity of igneous and metamorphic rocks in the lower crust but the team argues that all the evidence points to graphite as the most important factor. Temperatures and pressures of the deep crustal regions would not allow the retention of enough moisture to generate the high observed conductivity if it were based mainly on salt solutions.

Rolling out the bendable led

In a recent issue of *Nature (Vol 357 No 6378)*, a group from the Uniax Corporation in Santa Barbara, California, reports the fabrication of a fully flexible led that is easily visible under room lighting and can be bent sharply without causing failure. This is a significant practical advance on previous leds made from conjugated polymers.

Until this recent advance, electroluminescent devices made from organic materials were not mechanically flexible because of the need to employ rigid

Omni-Pro II - The Next Generation

When you get a new product, what are your main concerns? Freedom from frustration is certainly one important consideration, for your time is valuable. You will want a product which is reliable and sophisticated, yet simple to use, with clearly written documentation. You will be looking for a high standard of technical support and regular upgrades for the product.
We at Dataman recognise how difficult it can be to choose between programmers which look and cost much the same. So, instead, why not concentrate your effort into choosing a reliable vendor.
Dataman has been the leading vendor of low-cost programmers for as long as the market has existed.
Any of our customers will tell you that Dataman has always supplied excellent well-supported products.
That's why we're still here! We take technical support seriously. We give you your money back, if you're not satisfied. These are important points to consider. But now let's take a look at some of the special benefits of owning Omni-Pro II.

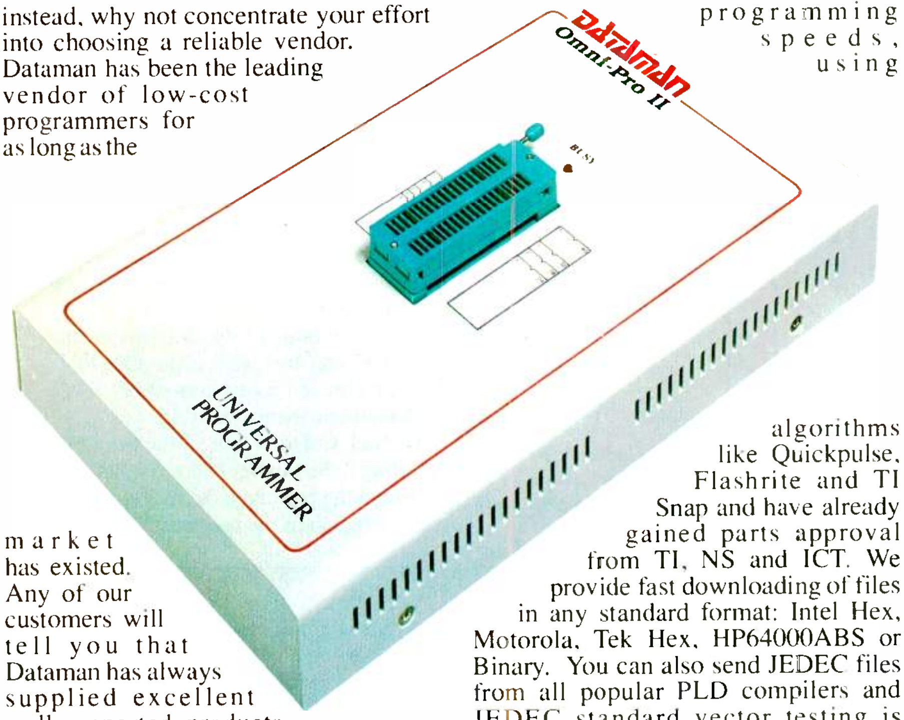

What Benefits?

Well, for instance, the interface is not via the computer's parallel port, which is speed-limited, and probably connected to your printer. A dedicated plug-in half card performs fast data transfers.
The software is a professional package in full colour that will run in only 400K of RAM. What's more it will run on any PC/AT or compatible - even the latest 486 machines. That's because Omni-Pro II has its own independent clock - some programmers rely on the computer for timing, and won't work with faster machines.
Ground pins are connected by relays - not by logic outputs. Some vendors won't approve programmers which don't ground pins in this way.
The 40-pin Textool socket can be changed without even having to remove the cover. A complete range of PLCC adapters is available.

Truly Universal

Omni-Pro II has universal pin-drivers which will accommodate a very wide selection of parts. You can program BIPOLARS, PROMS, E/EEPROMS, PALS, GALS, FPLAS, PEELS, E/EEPLDS and MICRO-CONTROLLERS. The latest FLASH EPROMS are supported too. The list has 1250 devices already and substantial numbers of new devices will be added FREE every quarter.
We have optimised programming speeds, using algorithms like Quickpulse, Flashrite and TI Snap and have already gained parts approval from TI, NS and ICT. We provide fast downloading of files in any standard format: Intel Hex, Motorola, Tek Hex, HP64000ABS or Binary. You can also send JEDEC files from all popular PLD compilers and JEDEC standard vector testing is supported: a full array of test condition codes can be generated.

Remember - you get a 30 day money-back guarantee, FREE quarterly software updates and FREE technical support - as much as you need. Phone now for a free Demo Disk and up-to-date Device-List.

Omni-Pro II comes with a FREE copy of NS's superb Open Programmable Architecture Language - OPAL Junior.

Omni-Pro II - complete £495

Gang-of-eight Programmer.....£395
This production programmer from Dataman can handle all 25 and 27 pin EPROMs up to 512K bits. Programs eight copies from a master EPROM, or from an object file. The G8 offers fast programming methods and three, user-selectable programming voltages. G8 is clearly designed for the busy workshop being supplied, as standard, in a high quality steel case.

CIRCLE NO. 109 ON REPLY CARD

Software Development from £195
Dataman's Software Development Environment, **SDE**, comprises a two-window Editor, Macro Assembler, Linker, Librarian, Serial Comms and intelligent Make facility. The latter reassembles selectively just those files you have edited, links them and downloads the object-code to your Emulator or Programmer. It's quick and painless. If the assembler finds a mistake it puts you back in the Editor at the right place to fix it.
The Multi-Processor version supports all common micros - please ask for list. The Disassembler makes source files out of object code - from a ROM, for example. SDE is not copy-protected.

SDE Multi-processors & Disassemblers	£695
SDE Multi-processors (includes 82 micros)	£395
SDE Single-processor	£195

OPAL from NS £297
Are you looking for a PLD design tool? Then OPAL could be just what you need. It supports state machine, truth table and Boolean equation entry, also optimisation, verification and implementation, for a great many PLDs.

Erase an EPROM in ten seconds!

Simply hold the gun right over the EPROM's window and squeeze the trigger. The strobe eraser puts out intense UV light at the right wavelength (253.7nm). Erase EPROMS on the bench, in the PCB or in the programmer.

Strobe Eraser...........................£175

UK customers please add VAT. Major credit cards accepted. UK delivery available next working day.

DATAMAN

Station Road, MAIDEN NEWTON,
Dorset DT2 0AE, England
Phone 0300-20719
Fax....................................0300-21012
Telex 418442
Bulletin Board...............0300-21095
(300/1200/2400/9600 V. 32)

contact structures or a rigid substrate. Indium/tin oxide is one of the most widely employed electrode materials, but it shatters readily when bent. Ideally an active layer made from conducting polymers would be complemented by a polymer substrate and transparent polymer electrodes; the only difficulty hitherto has been the difficulty of fabricating such layers in situ without poisoning the active layer.

Uniax's mostly-polymer led is made up of three different polymer materials, the first of which is a substrate made from polyethylene terephthalate, or PET. This PET film, 100µm thick, is first cleaned by boiling in solvents and then dried for an hour.

The next layer, which functions as a hole-injecting layer, consists of a polyaniline (PANI) complex, doped to render it soluble in common organic solvents. The PANI complex is applied to the substrate by spinning from solution, after which it is dried for 12 hours.

Uniax' flexible led is built on a 100µm thick PET substrate. Subsequent layers are around 0.5µm of PANI-CSA, followed by 1000-1500Å of MEH-PPV, then less than 1000Å of calcium.

The active electroluminescent layer, which follows next, consists of poly (2-methoxy, 5-(2'-ethyl-hexoxy) -1,4-phenylene-vinylene) – MEH-PPV for short! – which is topped by a metallic electron-injecting layer made from calcium. Light emission is through the PET substrate, and the calcium layer acts as a sort of mirror at the back.

The calcium layer also determines the light-emitting area, so it is possible to fabricate the led in any pattern or alphanumeric symbol desired.

Dr Nick Colaneri, one of the team that developed the flexible led, says that although the prototype devices emit in the yellow region of the spectrum, in principle

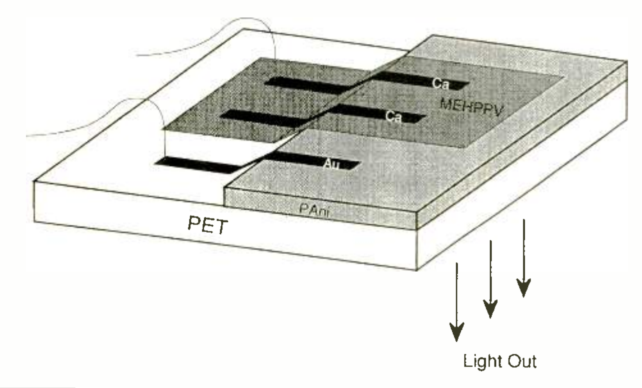

Flexible led with an applied bias voltage which is positive on the PANI electrode.

Break through in GMR materials opens commercial exploitation

Physicists working at Johns Hopkins University and at the University of California in San Diego have simultaneously discovered a new class of solid state materials. The remarkable characteristic of the materials is an enormous change in electrical resistance when exposed to a magnetic field.

Magnetoresistance is exhibited to some degree by most alloys and is the basis of many magnetic field-sensing devices such as magnetoresistive disk read-out heads. But the effect in most cases is extremely small – often less than a 2% change in resistance between zero field and magnetic saturation.

Back in 1988 this situation changed with a discovery that initially showed great promise. Several research groups showed that it was possible to create multilayer structures in which the change of resistance might, under certain circumstances, be as great as 50%. This phenomenon, called "giant magnetoresistance" or GMR, was demonstrated in a variety of multilayers consisting of iron/chromium, cobalt/copper, iron/copper and cobalt/gold/cobalt.

Theoreticians came up with a variety of explanations, some involving oscillatory exchange reactions and similar exotica, though even today the fundamental mechanism remains elusive. But from a practical point of view, all these layered structures – mostly involving transition elements – are difficult to produce and would be far too costly for everyday application. So, until recently, GMR has largely remained a laboratory curiosity.

Two papers *(Phys Rev Lett Vol 68 No 25)* now report the existence of GMR in a class of easy-to-prepare materials known as granular alloys. The alloys consist of tiny grains of ferromagnetic metal – such as iron – embedded in another metal. They bear little or no resemblance to the previous layered GMR materials and can be made without any of the stringent controls or delicate fabrication techniques hitherto required.

Professor Chia-Ling Chien, the leader of the Johns Hopkins team, says that research has been going on for many years into the creation of "unnatural alloys" - metals that don't naturally mix. Metals like iron and cobalt form alloys with almost every element, except for copper and a few others. Chien found a way to create these unnatural alloys using low temperature vapour deposition. The method allows him to produce thin films containing tiny particles of iron or cobalt less than 20 atoms across. Changing the size of the particles by heating can enhance the magnetoresistive effect.

Chien says that the first room-temperature tests of the new alloys showed a magnetoresistive effect amounting to 8%, considerably more than with any natural alloy. The effect led both the Johns Hopkins group and the San Diego team to develop a range of different alloys, including gadolinium/titanium and to test them under a variety of conditions and temperatures.

Detailed theories are still rather disjointed, but the fact that GMR has been demonstrated in materials that are easily and reproducibly fabricated suggests that they will soon have considerable commercial potential.

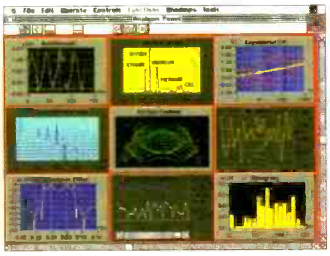

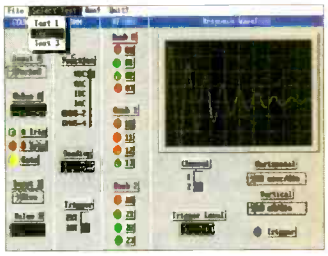

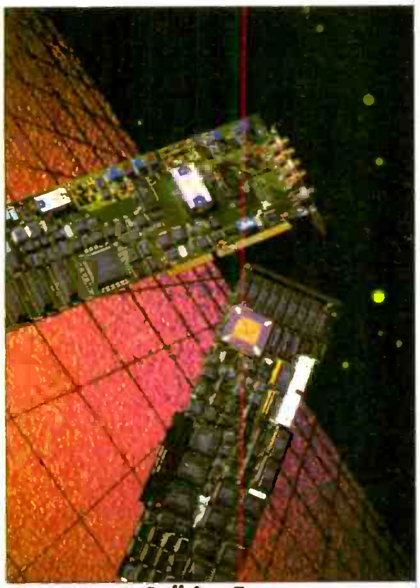

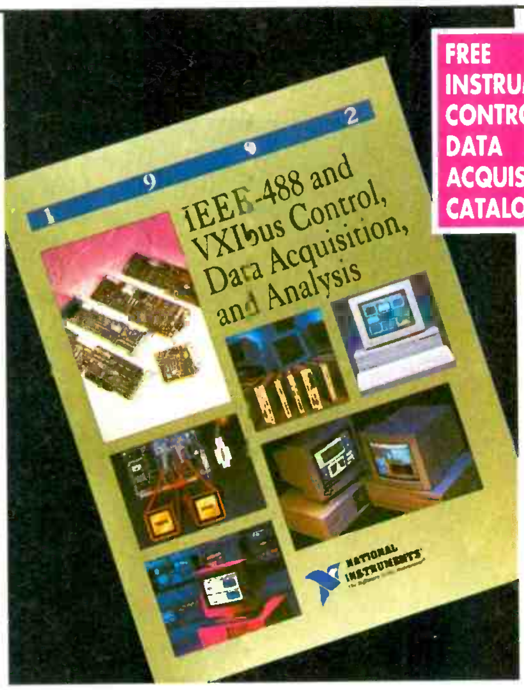

1 9 9 2
IEEE-488 and VXIbus Control, Data Acquisition, and Analysis
NATIONAL INSTRUMENTS

there is no reason why they should not be made to produce light of any wavelength. He says that the new leds are natural candidates for emitting blue light, something otherwise only possible using the most exotic inorganic materials and expensive fabrication technologies.

The other potential benefit of this flexible, mostly-polymer, diode is that it could be manufactured in big rolls without the need for ultra-clean rooms or ultra-high vacuum. It could therefore be used for large area displays or possibly even a light-emitting wall!

Electronics gets the measure of diabetes

Scientists in the US have developed a painless, non-invasive technique by which diabetic people can measure the level of their blood sugars. As well as replacing the traditional tests which require a blood sample, the new glucose monitor can provide continuous measurements – an important advantage for diabetics who are undergoing surgery or childbirth.

The new approach to checking blood sugar has been developed and patented by Sandia Laboratories, an R&D establishment operated by AT&T. Instead of requiring a drop of blood sample to analyse, the system determines sugar levels by their effect on near-infra red light as it passes through a finger or some other part of the body. Jim Borders, one of the project team, says that the idea of using infra red is not itself new, but that before it has not worked very well in practice.

Sandia's patented approach involves looking at a very large number of IR frequencies using a method called chemometrics, relying on advanced statistical techniques to analyse spectral data. In simple terms, it is all about the extent to which broadband IR is "coloured" as it passes through the skin; the nature of the coloration provides a precise measure of blood sugars.

The new technique is not only precise, but is also quick. Even with bulky laboratory equipment, a blood sugar analysis takes only a minute. Sandia says it is working towards a home monitor that could be carried around in a pocket. Another goal is an instrument that could be used in a doctor's surgery to avoid going through the wet chemical tests that are now used to determine glucose levels.

A portable painless method of measuring blood sugars would enable diabetic people to check their sugar balance as often as they wished. That in turn – to judge from preliminary research – might also help to reduce some of the tragic complications of diabetes, such as blindness, kidney disease, heart disease and limb amputations.

Ultimately there would be the prospect of automating diabetes management completely. Sandia says that connection of the monitor to a mechanical insulin pump and using a negative feedback loop should enable blood sugar levels to be corrected automatically. It would be the nearest thing to a completely mechanical replacement for the pancreas gland (which is defective in people with insulin-dependent diabetes).

Sandia Laboratories claims that its new multi-frequency infra red technology can be used not just for sugar measurements but for measuring virtually anything that circulates in the blood in moderate amounts. Jim Borders hints at one or two minor commercial possibilities, mentioning alcohol and cholesterol.

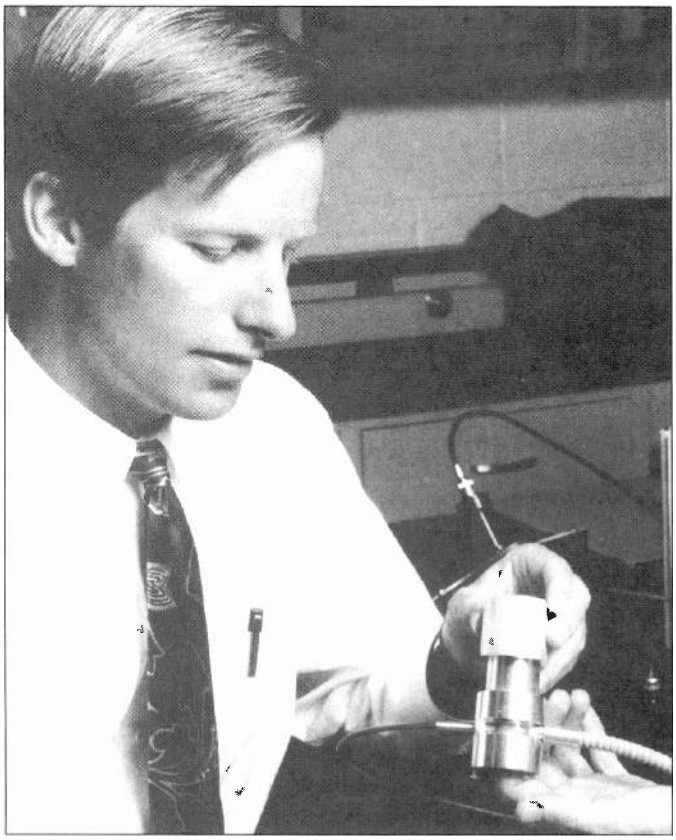

The non-invasive glucose sensor developed by Sandia National Laboratories and the University of New Mexico School of Medicine. A beam of infrared light is passed through the patient's finger and a portion of the light at a number of different wavelengths is absorbed by components such as glucose. The light is then spectrally dispersed and the resultant data is analysed to determine glucose concentrations.

Desk bottom computing – less stressful than desktop?

Keyboard-related injuries are now reckoned to be the leading occupational health problem in the US. Repetitive strain injuries or cumulative trauma disorders are said to account for 45% of workplace injuries and 63% of total injury claim payments.

Dr Alan Hedge, an ergonomist at Cornell University in New York reckons that many of the very common wrist injuries (arising from what is called Carpal Tunnel Syndrome) could be virtually eliminated if computer keyboards were dropped several inches below desk level on a gentle downward slope.

Hedge and his colleague James Powers conducted biomechanical analyses on volunteers using a standard computer keyboard that could be adjusted in several dimensions. The most successful and least stressful arrangement involved a backward slope that avoided bending the wrists upwards. It also provided a broad palm support to minimise muscular activity associated with an unsupported forearm.

The Cornell team also found that the best ergonomic arrangement supports papers in the same plane as the screen. Hedge says that, given a sloping keyboard, properly positioned accessories and a chair that allows the operator to support his or her back, there should be a considerable reduction in stress injuries as well as less eye strain and fewer typing errors.

POWER SUPPLIES

CLEAN POWER
IS NOW
BETTER VALUE

Whatever your application, Kenwood has a range of power supplies to meet it and guarantees exceptional value for money.

With 9 models, the low cost **PR Series** offers analogue meters with a voltage range up to 70V, current up to 7 amps and full over-voltage protection. Prices start low at £155.

The 7 models in the **PA Series** give high accuracy and single output with a digital display. They are rack mountable and include remote control and series/parallel operation. Starting at £220 they are very good value.

High performance, high stability and absolute accuracy are just a few of the features of the 10 model **PW Series**.

Others include built in microprocessor, multiple outputs, digital displays, last setup memory, output protection, dual tracking, GP-IB options and rack mounting. This series is an excellent investment from £405.

For higher DC voltages to 110 volts and current to 30 amps, the 12 model **PD Series** is ideal. There are analogue and digital versions with comprehensive features including series/parallel operation, remote sensing, remote control, voltage and current limiting, master slave operation and GP-IB options. These rack mountable supplies are economically priced from £520.

For further information, please contact:
Trio-Kenwood UK Ltd, Kenwood House,
Dwight Road, Watford WD1 8EB
Tel: 0923 816444. Fax: 0923 819131

PR Series

PA Series

PW/PWR Series

PD Series

KENWOOD
TEST & MEASURING INSTRUMENTS

CIRCLE NO. 114 ON REPLY CARD

R.S.T. **LANGREX** R.S.T.
SUPPLIES LTD

One of the largest stockists and distributors of electronic valves, tubes and semiconductors in this country.

Over 5 million items in stock covering more than 6,000 different types, including CRT's, camera tubes, diodes, ignitrons, image intensifiers, IC's, klystrons, magnetrons, microwave devices, opto electronics, photomultipliers, receiving tubes, rectifiers, tetrodes, thryatons, transistors, transmitting tubes, triodes, vidicons.

All from major UK & USA manufacturers.

Where still available.

Obsolete items a speciality. Quotations by return. Telephone/telex or fax despatch within 24 hours on stock items. Accounts to approved customers. Mail order service available.

LANGREX SUPPLIES LTD
1 Mayo Road, Croydon, Surrey CR0 2QP.
Tel: 081-684 1166
Telex: 946708
Fax: 081-684 3056

CIRCLE NO. 115 ON REPLY CARD

Complete your tools with Antex Soldering Irons

The art of accurate soldering is to maintain the bit temperature at the optimum level.

Antex fixed setting, thermally balanced, high efficiency irons maintain constant tip temperature and offer a wide range of soldering bits to suit your particular application.

For the more sophisticated applications, control at lower temperatures is essential. In these cases an adjustable temperature soldering iron is required. Also available are soldering stations with the option of digital temperature read out.

Antex products are designed for precision soldering to meet the demands of precision electronics.

Ask for Antex by name at leading Electronics distributors.

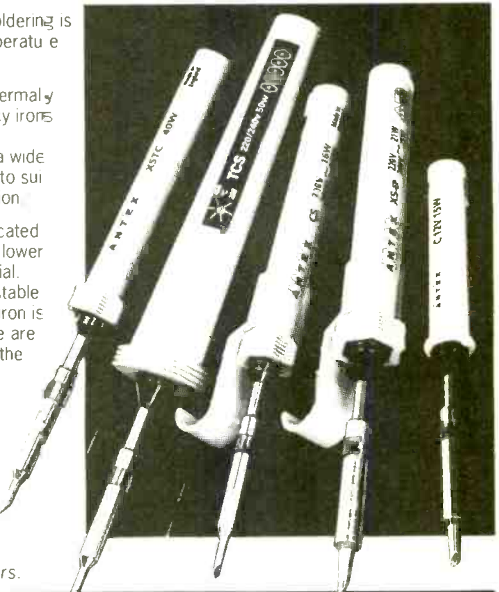

ANTEX

Antex Electronics
2 Westbridge Ind. Est.,
Tavistock, Devon PL19 8DE
Telephone: (0822) 613565
Fax: (0822) 617598

CIRCLE NO. 116 ON REPLY CARD

DIGITALLY CONTROLLED AUDIO PREAMPLIFIER

Digital control needn't compromise audio quality. Chris Miller shows how to drive an all-function preamplifier from a low cost microcontroller using the Philips I²C bus

Circuits used to control source input selection, gain and frequency response in audio preamplifiers usually consist of mechanical switches, potentiometers and complicated RC networks. Being electromechanical, they deteriorate with usage, develop tracking errors and are generally noisy and unreliable. Additionally, front panel controls require fiddly screened wiring, an expensive item in commercial production. In any case, screened circuitry is no guarantee against hum pickup due to induction and earth loops.

A halfway solution might be to use voltage controlled amplifiers and filters driven by DC voltages derived from front panel controls although the distortion penalties from fully parametric VCAs may be too severe. Philips thought so when it developed a range of audio control chips which produce their effects by switching integrated resistor networks through internal semiconductor switches. Designed properly, this scheme is almost as linear as a mechanical switch or potentiometer.

Additionally, it offers the possibility of microprocessor control enabling facilities such as remote operation and stored settings without compromise to audio quality.

The Philips system uses the microprocessor controlled I^{2}C two wire bus which connects up to specialised two-terminal ports on the individual control ICs. Originally designed for TV video and car radio equipment, this specialised local area network is increasingly being used to interconnect different pieces of electronics equipment externally.

An *EW + WW* article entitled *Microcomputer-controlled audio preamplifier* (June 1989) described a suitable microcontroller interface and typical signal routing. This has now been expanded from a simple application note to a full blown digitally controlled preamplifier. Although this article is intended mainly as a design illustration, microcontroller software code for this design is available directly from the author (see box at end of article). **Figure 1** depicts the general structure of the electronics.

Front end

The RIAA preamplifier shown in **Fig. 2** is after John Linsley Hood. Despite its longevity, this design performs well with moving magnet cartridges.

To support Phono, CD, Cassette, Tuner, Video and the obligatory 'Aux' requires six input channels. It is also convenient if the record output can be selected independently from the amplifier input. The input selection facilities built in to the audio processor chip only provides for four stereo inputs and one mono input.

Figure 3 shows an input selector based on the *CD221000* analogue 4x4 crosspoint switch. Three devices provide twelve inputs (six stereo channels) and four outputs (output to amplifier and record output).

These switches contain a latch for each crosspoint position; it only allows one switch to be closed in any given row. Thus setting up the relevant crosspoint arrangements requires only four bits written to each chip. This is described more fully in the software section.

Split power rails are avoided by biasing the switch matrix at roughly half the supply rail – the audio processor chip provides a convenient, stabilised reference voltage. Inputs are decoupled using 100nF capacitors with 470k bias resistors, yielding a –3dB rolloff at 3.4Hz.

The crosspoint outputs feed unity gain buffers comprising an *OP470* ultra low noise op-amp. The buffered record outputs feed the record output sockets and a further set of buffers feed the audio processor chip. This buffering stage is definitely required: one never knows what might be connected to the record output.

Gain presets are avoided by adding an input-dependent offset to the volume through software. The only drawback to this approach is that high level signal sources could overload the input stages. In practice, these will handle 1.5V rms and this has proved adequate for several different CD players. Furthermore levels can be set with the amplifier covers on, and will always be equal for each channel while the technique eliminates mechanical components.

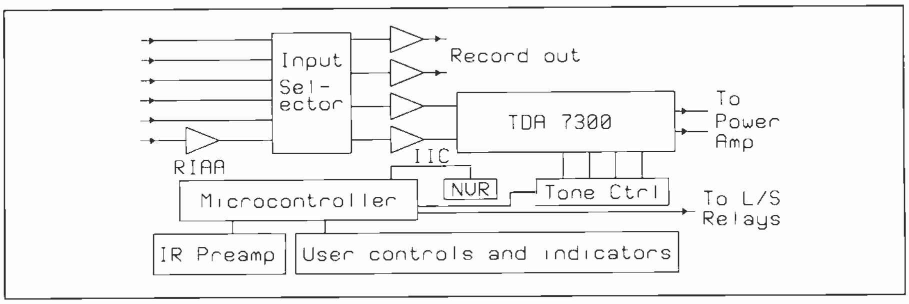

Fig. 1. General structure of the digitally-controlled audio preamplifier.

The TDA7300

This chip forms the heart of the system. It features input selection, volume control by 2dB steps, treble and bass control by 2.5dB steps and has two independently attenuated outputs per channel. It was designed for four-speaker car audio applications. It implements all control functions through I^{2}C commands delivered by the two-wire bus.

Its input selector switch provides stereo/reverse stereo/left-left/right-right and mono routing. This could, of course, have been effected by means of more complex software control of the input crosspoint, with the exception of the mono requirement. Since the volume control operates with both channels ganged, balance is achieved by altering the output attenuators in software.

The chip provides a reference voltage – nominally 4.3V – which is used to bias the input matrix and unity gain buffers. Since these are biased to the same voltage as the *TDA7300* input circuitry, DC coupling can be used.

The tone control function requires external capacitors. This design selects these with cmos

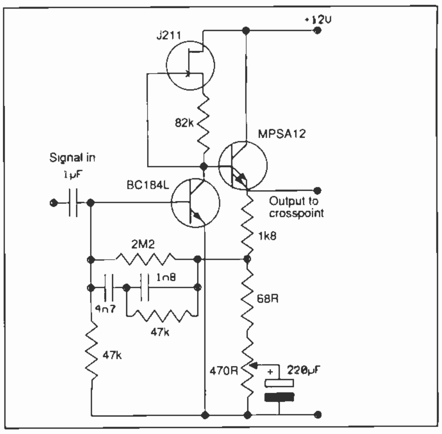

Fig. 2. R1AA preamplifier is after John Linsley Hood and performs well with moving-magnet cartridges.

Fig. 3. Tone control and input switching sections. Input selector based on the CD221000 analogue 4x4 cross-point switch. 12 inputs and four outputs are provided by three devices.

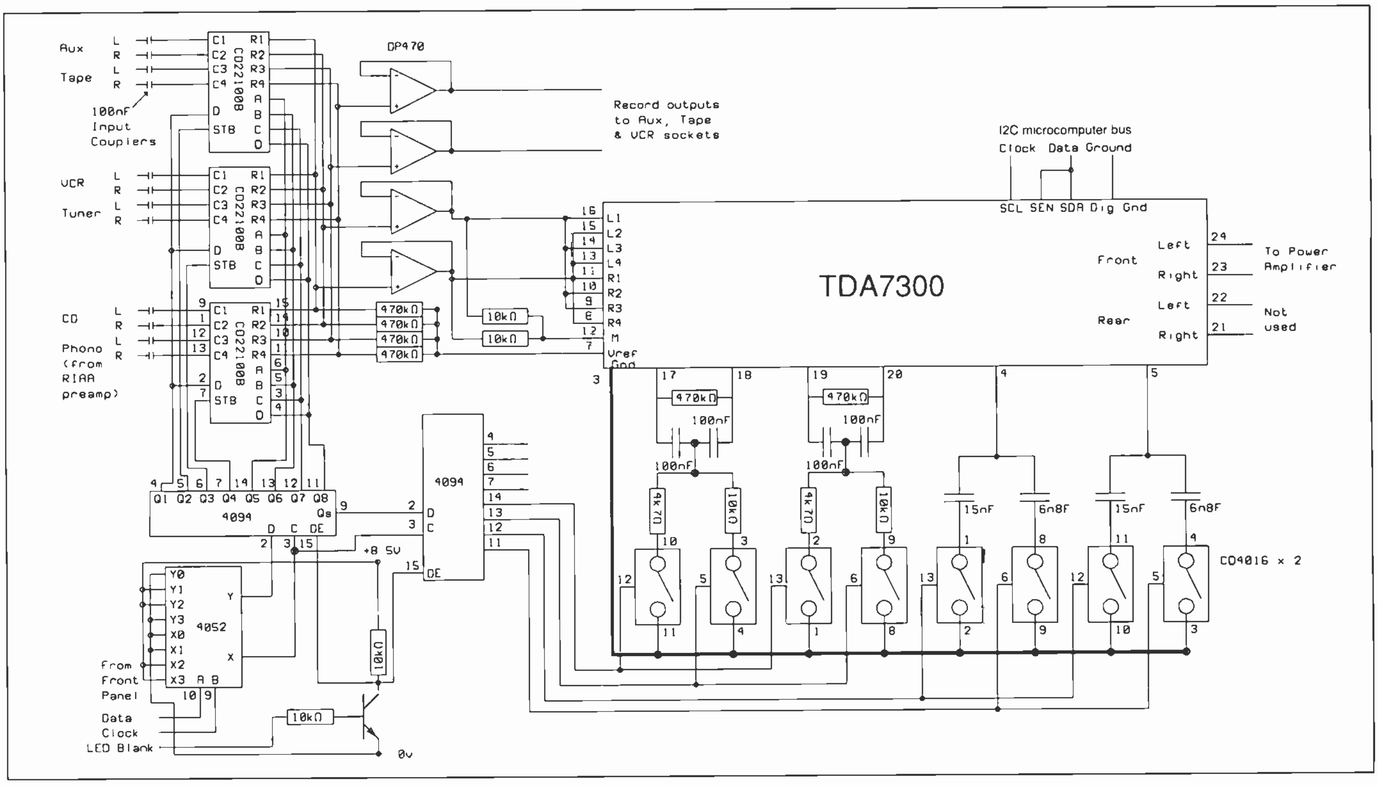

switches to provide variable turnover frequencies. The text panel *Programming the TDA7300* summarises the commands.

Microcontroller and non-volatile ram

The minimal *8031* microcontroller circuit uses a *74C373* address latch and any eprom from the *2716* up to the *27128*. The on-chip 128 byte ram is sufficient for this design. Thus no external ram is required although the relevant *8031* pins are available for further customisation. The external eprom holds the program. **Fig. 4** shows the circuit.

Details of the *8031* can be found in numerous places; for the purposes of this article one simply notes that it has four 8-bit ports. When the micro is using external memory, Port 0 is used to carry the data bus and the lower eight bits of address bus, and port 2 carries the most significant eight bits. Port 1 is therefore available as a completely uncommitted input/output port. Port 3 is also free, but most of its bits have some other function such as interrupt lines. Ports 0 and 2 thus become the main interface to the outside world.

The preamplifier software programs an additional function into port 0. While its main use is to address program memory, it also acts as an input port for the pushbuttons.

Port 0 has no internal pullups unlike the other ports. 5k6 resistors ensure that the input is pulled low (Fig. 4). The eprom is connected directly to the *8031* pins while the input buttons are connected via 3k3 resistors.

Clearly the switch inputs and the eprom can contest the input port. If during program access the input switch is open (i.e. low) but the eprom wants to deliver a '1', the 400μA that the eprom is capable of sourcing will develop 2.44V across the pull-down resistors – safely above the 2.0V V_{IH} threshold of the *8031*. If, on the other hand, the input switch is closed (i.e. high) but the eprom wants to supply a '0', since it can sink about 2mA, and the current supplied via the input switch is only 1.5mA maximum, the eprom will again win.

During input switch reads, the eprom is disabled, and therefore open circuit. If the input switch is closed, the input seen by the micro will be (5–0.7)*4.7/(4.7+3.3) = 2.5V – seen as '1'. An open switch will allow the pulldown to ensure a '0' being seen. **Figure 5** indicates the circuitry involved at Port 0. While this skulduggery may be viewed with suspicion by those used to designing "large" systems, in this instance it has avoided the use of a 20-pin octal buffer for the sake of a few resistors.

Careful consideration was given to the storage of system constants such as the gain level of the individual inputs. Battery-backed cmos ram was avoided, in the end, since great care has to be taken to ensure it is not corrupted during power up/down. The *24C02* backup eeprom is accessed through the I^2C bus and has a ten-year retention capability without power. Costing rather less than a decent pri-

Programming the TDA7300

The device comes with hex 88 as the permanent I^2C write address. Although nominally hex 89 is available as its read address, there are no valid read commands.

Data bytes sent to the chip are interpreted as commands as follows(programming table):

TDA7300 programming table

MSB							**LSB**	**Function**
0	0	B2	B1	B0	A2	A1	A0	Volume control
1	1	0	B1	B0	A2	A1	A0	Left rear speaker
1	1	1	B1	B0	A2	A1	A0	Right rear speaker
1	0	0	B1	B0	A2	A1	A0	Left front speaker
1	0	1	B1	B0	A2	A1	A0	Right front speaker
0	1	0	x	x	S2	S1	S0	Input switch
0	1	1	0	C3	C2	C1	C0	Bass control
0	1	1	1	C3	C2	C1	C0	Treble control

In the table above, Bx represents the binary value of a 10dB step and Ax a 2dB step. The data byte 14_h would therefore mean "set the attenuation to 28dB". Values of the 'A' bits in excess of 4 are not allowed.

The input switch Sx values 0 to 3 select stereo inputs 1 to 4, with a value of 4 selecting "mono".

The tone controls have a most interesting pattern whereby Cx running from 1 to 7 select 2.5dB steps of -15dB through to 0dB; we then start to count backwards from F_h to 9_h selecting 0dB (again) to +15dB respectively.

The I^2C bus has been described[2], and full details of the *TDA7300* may be found[3].

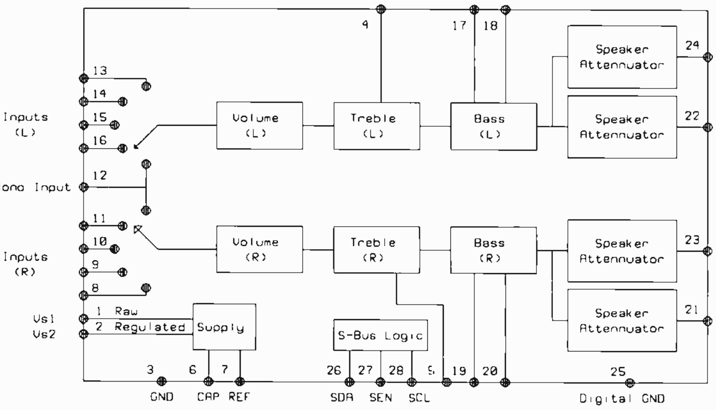

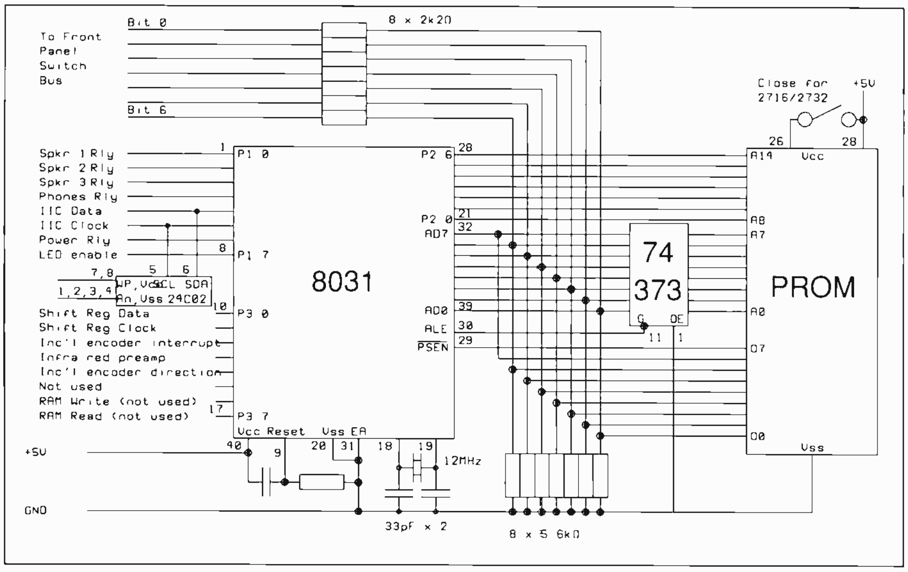

Fig. 4. Microcontroller circuitry. No external ram is required in this minimal 8031 microcontroller circuit. The program is held in external rom.

mary cell, this seems like the answer. Connection is also simple, since – being bus compatible, its connection with the microcontroller comes down to two wires.

The following table shows how the port pins on the microcontroller are used. I^{2}C generation is carried out in software

Port.Bit	Function
1.0	Speaker relay 1
1.1	Speaker relay 2
1.2	Speaker relay 3
1.3	Headphones relay
1.4	I^{2}C Data
1.5	I^{2}C Clock
1.6	Power amplifier mains relay
1.7	LED power control
3.0	Shift register data
3.1	Shift register clock
3.2	Incremental encoder interrupt
3.3	Infra Red detector interrupt
3.4	Incremental encoder direction
3.5	(Not used)
3.6	Reserved for ram write
3.7	Reserved for ram read

Infra-red preamplifier

When an infra-red pulse impinges on the photodiode, it produces a low pulse on pin 7 of the *TDA2800* IR amplifier. This is connected to an interrupt line on the *8031* – Port 3.3. A diode/capacitor network ensures that each set of pulses from the transmitter creates just a single interrupt. All further decoding is carried out in software. **Fig. 6** shows this standard application of the *TDA2800*.

Controls and indicators

Digitally controlled equipment offers highly customised front panel switches and indicators. The design shown here depends heavily on led-illuminated push buttons with a round presentation (IMO/Omron B3F9100 series). **Figure 7** shows the front panel layout. Some functions are duplicated on the remote control.

Following the power button, twelve more are used for input and record source selection. The chosen source button is illuminated when pressed. A single incremental encoder is used for analogue quantities and its function is selected by buttons for volume, balance, treble or bass, the levels of which are indicated with led bar displays. Four more buttons select tone control turnover frequencies, and a further four switch three pairs of speakers and a pair of headphones on and off.

In order to avoid acres of PCB given over to 8-bit buses, serial communication is used for most of the i/o handling controls and indicators. **Fig. 8.** shows the user interface circuitry.

With the exception of the relay controls and I^{2}C bus, the microprocessor delivers all output signals through a long chain of shift registers – fourteen in all. The majority of these outputs are control front-panel leds, although some are used to select tone control capacitors and to drive the input cross-point.

Possible drawbacks of this approach are slowness, and where leds are being driven while the data is being shifted through the registers, leds that are "off" glow visibly. The first is not a problem for human interaction since the update rate is sufficiently frequent; the second is handled by using a single output line from the *8031* to disable the leds during the update period: a transistor disconnects the led cathodes from ground during the update period.

Some of the shift register outputs are used to enable one of the banks of input switches. These are diode OR'ed onto seven of the port 0 lines. Apart from the bank covering the source selection, all other sets of input switches are dealt with by four input lines, thereby minimising the amount of busing required.

The incremental encoder feeds an interrupt line on the microcontroller. While this provides a satisfactory maximum speed, if the encoder is being turned very slowly, the contact can "dither", resulting in multiple interrupts, hence multiple steps. This is overcome by fitting a 10nF capacitor across the interrupt line, which can only charge at a rate limited by the input current of the *8031*. This allows interrupts to occur only at 40μs intervals.

Practical considerations

Mixing analogue and digital circuits is not without its risks. Great care has to be taken to keep the pulsed led current from reaching the audio stages. To do this, the PCB containing the leds was mounted on the far side of the steel front of the main amplifier chassis. Electrolytics on the front panel localise heavy currents, minimising leakage onto the power rails.

The crosspoint switches suffer audible breakthrough from the control latches to the signal path, so they should only be written to when a change is required – the original software refreshed the latches on a regular basis and this could be heard on the output as a soft "galloping" noise.

Similarly, there is some breakthrough from the I^{2}C bus to the audio path inside the *TDA7300*, so good software design will only update the device when necessary (i.e. a control has been moved).

Analogue and digital earthing paths must be kept completely separate, and only connected deliberately at one place, usually the power supply, unless the +5V and +12V supplies are independent.

A reasonable distance (say six inches) should be left between the "noisy" microcontroller and the audio paths. Providing these precautions are taken, the digital noise on the output is at acceptably low levels.

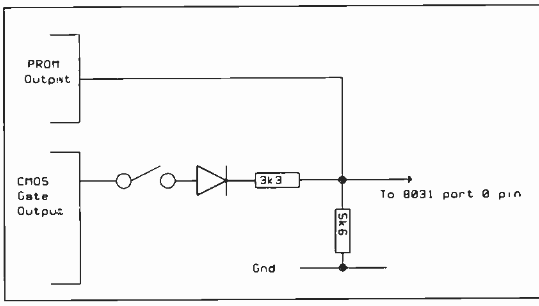

Fig. 5. Using port 0 twice avoids having to use a 20-pin octal buffer. A few resistors suffice.

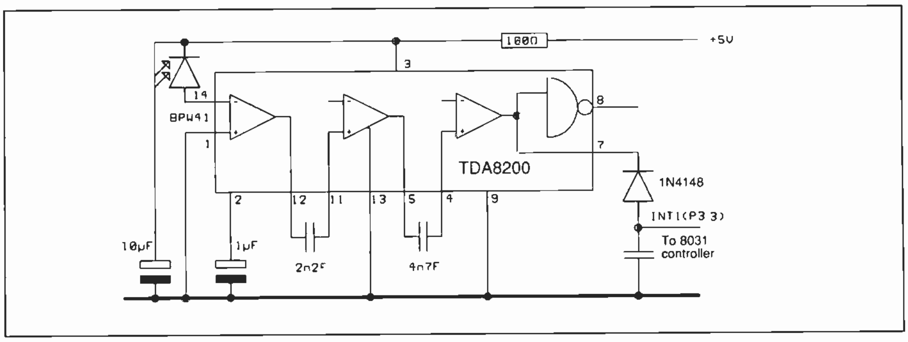

Fig. 6. Only one chip is used for the remote control receiver. See also section "Cracking the infra-red code".

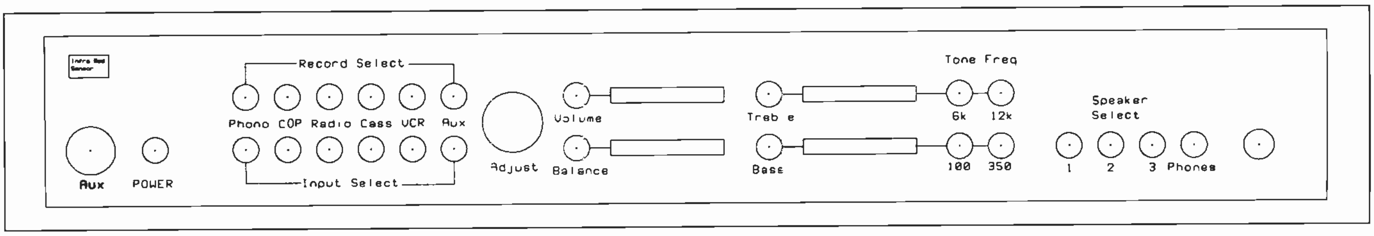

Fig. 7. Front panel layout of the preamp, which uses round led-lit push-buttons.

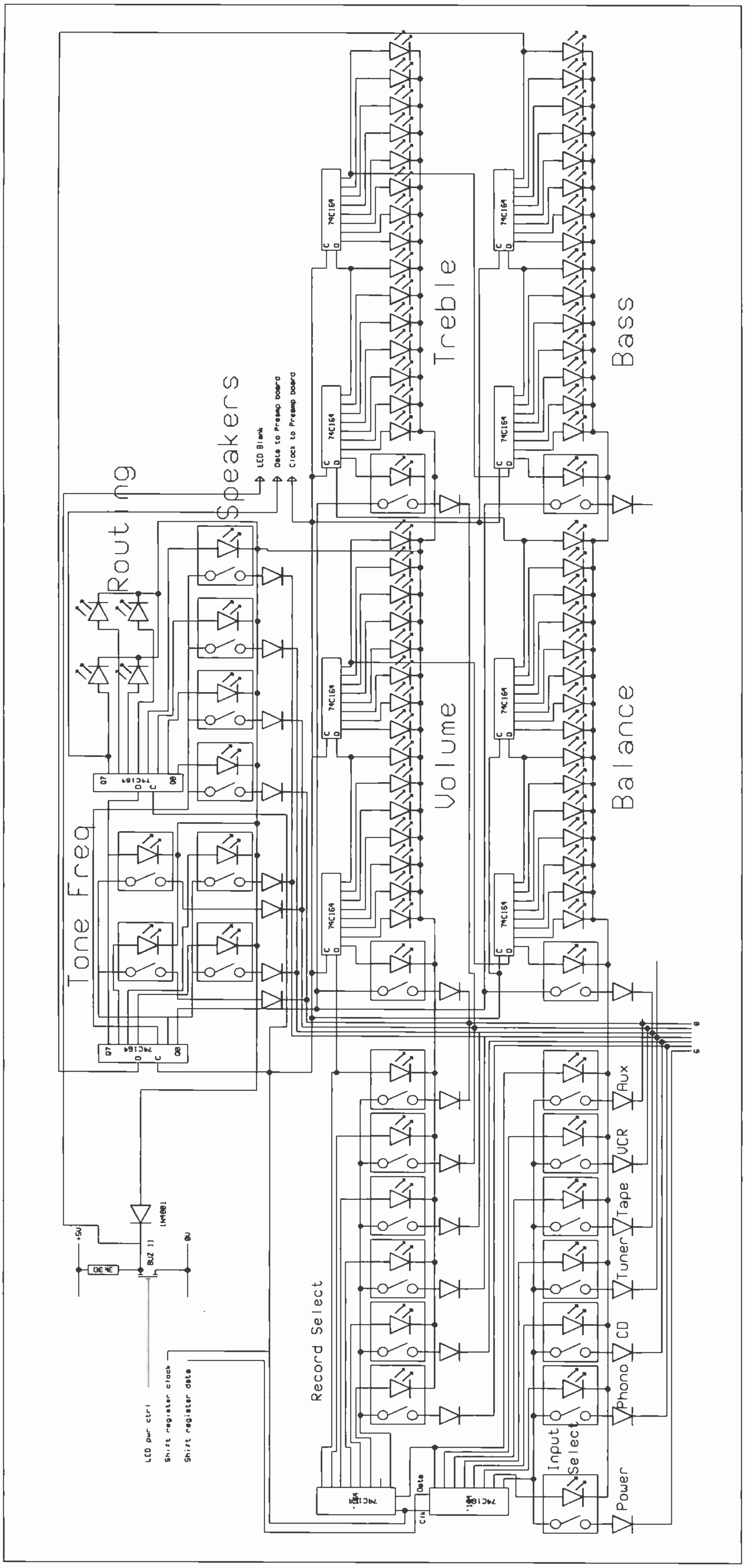

Fig. 8. Front panel circuitry. Use of shift registers simplifies the control of over 80 leds and 20 switches. Serial communication is used for most of the i/o handling controls and indicators.

Software design

The software is used to implement the following features:

Input gain equalisation
Muting during input selection
Balance controls
Infra red decoding
Input switch debouncing
Child lock
Incremental encoder operation
Volume/Balance/Bass/Treble bargraph operation

Each of these may be regarded as a basic set. Once the hardware is working, the possibilities for enhancement to the software abound. The software can be considered in four major

Getting started with the *8031*

Firstly, don't be frightened of assembler programming the 8031. Assuming you have an IBM-compatible PC, Shareware assemblers are very reasonable and with the addition of a eprom programmer – or better still emulator – you can get started. An oscilloscope is also an essential tool.

The simple program;

```
loop1:   cpl p1.0  ;complement port 1, bit 0
sjmp loop1; and do it again
```

should result in pin 1 of the 8031 producing a beautiful square wave with a 6μs period, easily detectable with an oscilloscope.

If an i/o pin is reserved for debugging, all the "I wonder if it went through that place" questions can be answered by inserting the odd CPL instruction to that port bit and observing the pin on a 'scope. Of course, if you have the luxury of a working 8-bit shift register connected to the processor, you can even display the contents of a register – visibly if leds are connected.

The manufacturer's literature (or a good third party handbook) makes essential reading with growing fascination for assembler programming.

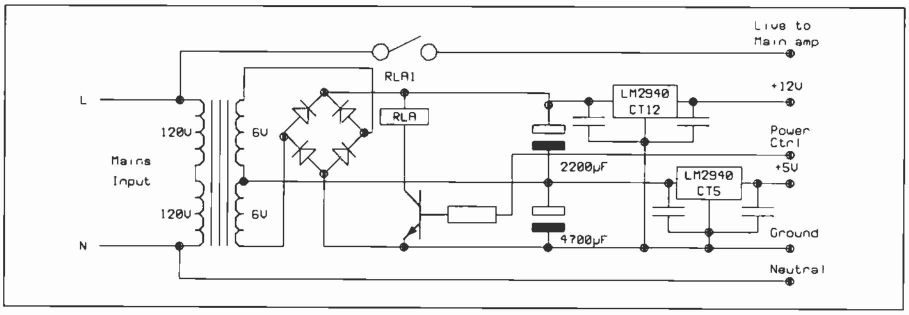

Preamplifier power supply.

parts: initialisation; infinite loop "scheduler"; interrupt service routines; I^{2}C support subroutines.

Main loop: The processor spends most of its time going round a loop which simplified in pseudocode would read:

```
do {
read & process input select switches
read & process record select switches
read & process function select switches
read & process tone select switches
read & process speaker switches
deal with any results from infra red receiver
update crosspoint array if any changes
update TDA7300 via I²C bus
update led bar graph display memory map
} forever;
```

The incremental encoder and remote control inputs are dealt with by interrupt service routines which signal to the main loop by leaving simple messages in ram.

Incremental encoder interrupt service routine: The incremental encoder (Alps *LA226WD*) comprises two staggered sets of contacts, arranged so that if one is used to trigger the microprocessor on closure, sampling of the other will determine whether the device is being turned clockwise or anticlockwise. This sampling must be carried out very soon after the falling edge has been detected if false readings are not to be obtained when the rotation is rapid. For this reason, an interrupt input to the *8031* is used, and the first action of the interrupt service routine is to sample the other input connected to the second track. Incidentally, the microcontroller responds to interrupts within 8µs.

Cracking the Infra Red code

Inspection of the output on an oscilloscope connected to a photodiode revealed a simple code whereby '0' is represented by a series of short pulses of a particular duration followed by a long gap, and for a '1', the gap is shorter. Sixteen bits are sent, the first eight appear to represent a device code, whilst the next eight appear to represent the function required of that device.

The first pulse group detected interrupts the 8031 starts timer 1, and clears out a 16-bit variable to be used as a shift register. When the next is received, the value of the timer is inspected with five possible outcomes.

Too early – spurious pulse
In likely range for a '1'
In between '1' and '0'
In likely range for a '0'
Timer expired prior to arrival

If the timing is "wrong" the code is aborted. If not, then the relevant bit value is shifted into the RAM variables used as a 16-bit accumulator. On successful receipt of all sixteen bits, the interrupt service routine sets a RAM bit to tell the main loop that a valid code has been received and should be acted upon.

When the software has determined the direction of the step, a subroutine is called (still in interrupt mode) to adjust the variable presently being controlled (i.e. vol/bal/bass/treb). This same routine is also called in response to detection of the "up" or "down" keys on the remote controller.

Note that the volume variable is stored internally as a number between 0 and 128, then converted before delivery since the *TDA7300* needs a form of binary coded decimal number.

Infra red interrupt service routine: In the author's case, the JVC remote control supplied with a VCR had additional buttons designed to operate a JVC television – a Grundig TV is quite unmoved by these!

In essence, the interrupt routine measures the time between pulses which is one interval for a '1', another for a '0'. The text panel gives more detail. The reader will need to adapt the software to match the remote control available.

The code at the scheduler level weeds out commands intended for other devices, acting only on those commands intended to control the amplifier.

Volume/Balance/Bass/Treble bargraph operation: These subroutines are called to convert the internal variables into a continuous bar graph for volume, or a moving point for the other variables. The resulting led pattern is written to the display ram area to be delivered as part of the normal scanning cycle.

Input gain equalisation: The "variable adjustment" routine referred to above detects whether the input select button is being held down. If it is, the input gain equalisation array entry corresponding to the chosen input is adjusted up or down within a range of *xx* to *yy*. This value is added to the attenuation set by the volume control prior to transmission on the I^{2}C bus to the *TDA7300*.

Input selection and muting: Selecting the input source (and record source) is a matter of writing four bits to each crosspoint chip. Since all the control lines are operated by the chain of shift registers, it is quite laborious.

First the appropriate data bit, the required bit address and the required chip select are delivered with the strobe bit low. Then the same pattern is repeated but is written with the strobe bit high . Finally, the same pattern but with the strobe bit low again is written. Thus 36 shift register update cycles must take place to update the crosspoint. This takes about a second.

SOFTWARE

The author can provide the shareware assembler , and project source and listing files on receipt of an IBM format disk (5.25in or 3.5in) and a cheque for £2.50 to include return postage. He can also program most proms for the same price. If there is sufficient interest, he will consider making front panels and printed circuit boards available. Please write to 53 St John's Road, Sevenoaks, Kent TN13 3NA.

While this is going on, the *TDA7300* is set to maximum attenuation, since during the update process it is possible to have "strange" combinations of the crosspoint set, giving for example left channel from one source, right from another.

Balance, bass & treble controls: These controls operate by a variable running from 0 to 15, and indexing into fixed data arrays containing the relevant commands for the *TDA7300*.

Child lock: The author's four year old found the array of pretty lights most interesting, and the fact that the bottom left button turned them on and off even more so. This led to the need for a child lock. This was implemented by ruling that if the amplifier had been turned off while the Volume function select button was pressed, the system would be deemed locked, and the Power button would be ignored unless the Volume button was again held down. This helped considerably and the junior op has now lost interest. ■

References

1. Hi-Fi News and Record review, January 1973
2. Description of I^{2}C bus
3. SGS-Thomson *TDA7300* Datasheet, June 1988

Micro AMPS

£99 8051 'C' COMPILER £99

- Preprocessor, compiler, optimiser
- Integer implementation
- Inline assembler
- Assembler level simulator and monitor
- Single chip to fully expanded memory
- Micro C is not a re-worked small C
- Other code generators available: 68HC11, 6809, 8085
- Low cost cross assembler available: 8031/8051, 6800/01/03/05/09/11, 8085/8096

£99 8051 BASIC COMPILER £99

- Integer BASIC compiler
- Supports single chip mode
- 8051 cross assembler included
- High level debugger runs on PC
- Standard Basic commands supported
- Specific functions to access 8051 SFRs and internal memory
- Line editor included, accepts text files
- Generates INTEL hex format output
- Output suitable for 87C751

8051 ICE (ICE51™)

- Low cost 8051 In-Circuit Emulator
- Low power, 5 volt operation
- Plugs directly into the 8051 processor socket on target hardware
- 32K Bytes of battery-backed RAM for program/data
- Single stepping and break points
- Assign memory and SFRs
- Upload/download INTEL hex files
- PC host software communicates via serial port
- Monitor file supplied in assembly form
- On-screen disassembly of code
- I²C drivers available
- Real time clock version available

™ ICE51 is a trademark of Intel Corp.

87C751 ICE (ICE751)

- Low cost 87C751 In-Circuit Emulator
- Emulation cable plugs into the 87C751 processor socket on target hardware
- On-board programmer for DIL devices
- PLCC adaptor available for 87C751
- Programs 87C752 DIL and PLCC devices through optional adaptors
- Monitor uses only 48 bytes of program memory
- Upload/download INTEL hex files
- Assign memory and SFRs
- Set break points
- I²C drivers available
- On-screen disassembly of code
- PC host software communicates via serial port

8051 BOOK
Architecture, Programming and Applications (£49.95). This book includes a free assembler and simulator for personal or educational use

PEB552
The Philips evaluation board for the 80C552 processor variant, a monitor and programming adaptor are available for this product

I²C
Quick Basic development tools available which includes I²C monitor program, I²C connector/cable assembly and parallel I/O demo board

MACH 1
An RTX2000/1 PC based evaluation board featuring the RTX2001 RISC Forth processor capable of sustaining up to 12 MIPS

ICC2000
An 8 channel intelligent communications card using the RTX2001 RISC Forth processor capable of sustaining up to 12 MIPS

FORTH++
A low cost RTX200/1 compiler optimised for use on the IBM PC based MACH1 development board but can be interfaced to other boards

The 8051: An Introductory Course
This is a one day course aimed at customers who need to become familiar with the MCS51 (8051) microcontroller family, and designed to give a detailed look at the generic 8051 processor facilities.

Access

66 Smithbrook Kilns, Cranleigh, Surrey, GU6 8JJ, UK
Tel: +44(0)483 268999, Fax: +44(0)483 268397

VISA

CIRCLE NO. 117 ON REPLY CARD

Libraries lend authority to cad package

Powerful schematic capture and PCB layout software can be let down by inadequate libraries or poor documentation. Martin Cummings finds no such drawbacks with *Ultimate*.

Ulticap for schematic capture and *Ultiboard* for PCB layout are part of the *Ultimate* family of software products. The name might be relatively new to the UK, but has been around long enough elsewhere to have acquired a comprehensive set of features and been well tried and tested.

Quantity of libraries and quality of documentation are undoubted strong points, to such an extent that purchasing the package is almost like being given a range of data books and a design training course free with the software.

There are four levels of software from which to choose. The *Challenger* version is good value, offering a professional design environment for up to 700 pins and almost all the features of the rest of the family.

But pay more, and the circuit need only be limited by a computer's memory size – and large demands are certainly made on system capabilities. *Ulticap* needs a massive 7Mbytes of hard disk and *Ultiboard* about 4Mbytes. Almost 4Mbytes of the total is due to symbol and component libraries, and considerable decompression of files takes place as they are unloaded from three floppy disks.

The lowest cost *Challenger* system will work on a basic 640K machine. But more expensive versions make use of 286/386/486 memory management and benefit both in speed and capacity from plenty of ram.

In any case the software will not run on anything less than an EGA screen – nor should it: displays can get very cluttered. Drivers are included for VGA and a good range of higher resolutions up to 1024 by 768 pixels: packages of this calibre look much better on a big, high resolution monitor.

Either a mouse or a digitiser pad can be used as a pointer.

Displays for both schematic capture and PCB layout are almost identical, and all but one line at the top of the screen – used for text entry, error messages and XY co-ordinates – is dedicated to design.

All commands are called up by selecting from menus which appear near the top left hand of the screen, prompted by a single mouse press. Two or three menu selections may be necessary to execute some functions, but the menu title shows the selections made so far and aids navigation through them.

Zooming in and out is achieved with a single function key press or by defining a window, so zoom factors are infinitely variable. Screen redraw time on a 386SX is negligible: even complex designs are completed in a second or two. Panning is also achieved at the press of a key and the screen can be redrawn centralised about the current cursor position. When the cursor approaches a screen edge, *Ultimate* will autopan – which can be very frustrating, particularly if the move into the autopan zone is accidental. It is like someone tripping over your drawing board just as you start to draw.

But on the plus side, autopan can be turned on or off at will, and is very helpful when connecting components. Wires can be drawn from point to point without breaking off to pan manually.

Periodic security dumps are taken

Zooming is achieved with a single function key press or by defining a window, so zoom factors are infinitely variable.

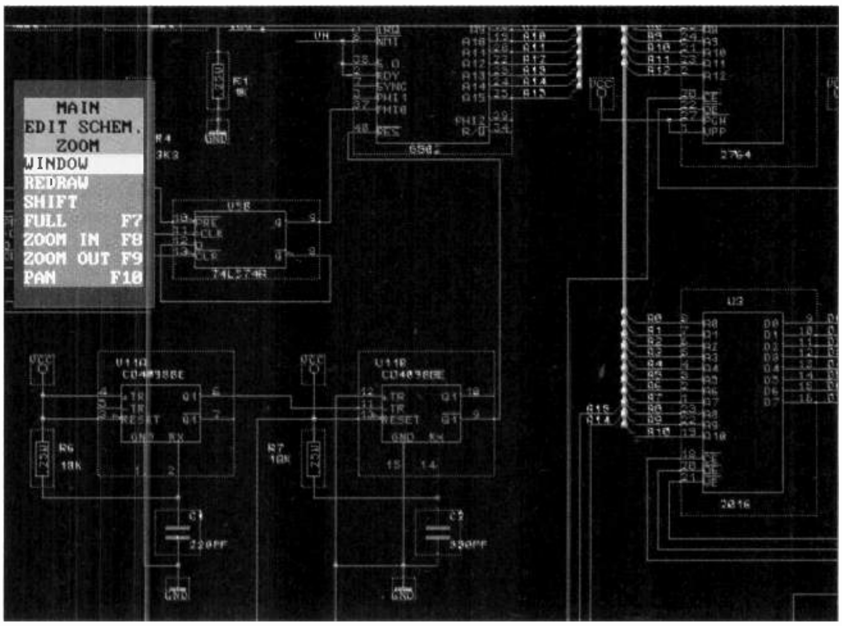

SYSTEM REQUIREMENTS
Challenger/Entry level needs:
80286 processor
640k ram
...preferably more
Dos version 3.0 or later
7Mbytes HD
EGA or VGA graphics
Mouse

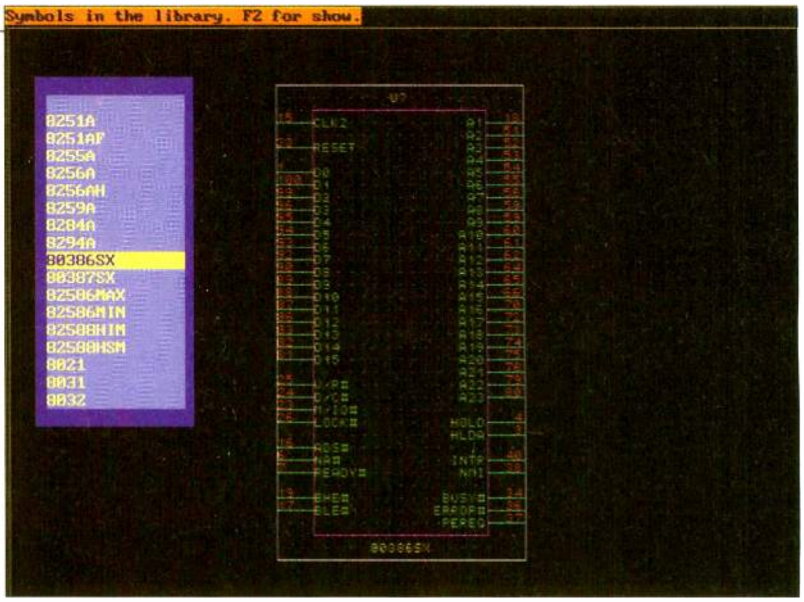
Symbols in the library. F2 for show.

Selection can be made by browsing through a list (in this case the 80386SX) – though it can be a lengthy process. But the choice is impressive.

automatically during design, the period between dumps being adjustable and another example of a structure that is highly configurable. In fact almost everything from the screen colours to menu content can be configured although changes are by no means necessary for successful operation and the manual strongly advises against needless reconfiguration because of possible support problems.

Visible and invisible (snap) grids can be set to any reasonable resolution down to 0.001in and turned on or off at will. Units are either metric or imperial, and it is further evdence of flexibility that even the snap capture distance can be adjusted. Co-ordinates are continuously displayed in the top right hand corner and can be complemented by relative co-ordinates upon demand.

Schematic capture

Complete freedom is allowed in defining proprietary sheet sizes, with European sheets predefined from A4 to A0 and American standards A to E. The next step is simply to select circuit symbols from the libraries and place them onto the schematic – and it is the libraries that are one of the most impressive features of this package. The 23 supplied cover such categories as logic, analogue, discrete components and various microprocessor families. Symbols added to a schematic build up a local library associated with that sheet, so that new symbols can be chosen from the local library in memory, the original ones on disk, or the library associated with another sheet.

Selection can be made by typing in the part identity, or, if the identity is not known, by browsing through a list – though this can be a lengthy process. For example the *74LS* series library stretches from *74LS00* to *74LS962*.

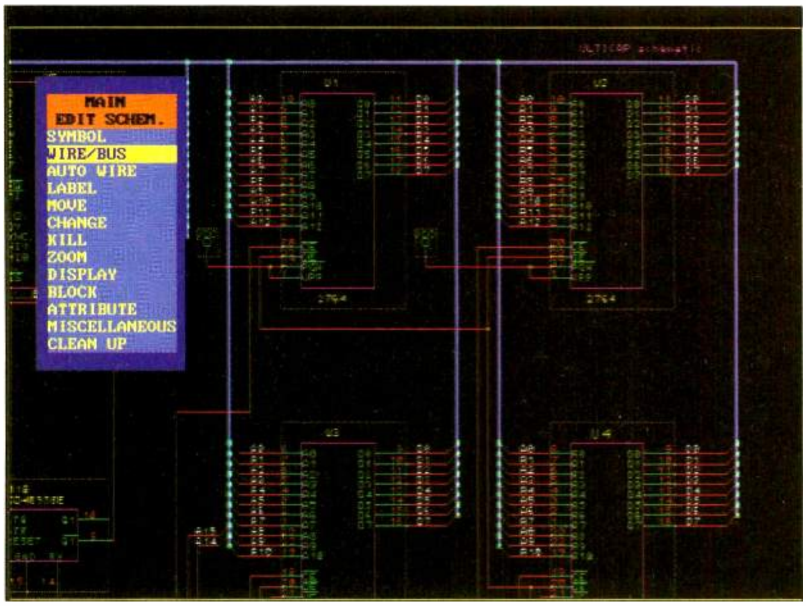

Bus handling is excellent, picture shows edit wire/bus menu.

The choice is impressive, but with only 17 items on the scrolling menu, scrolling from one end of the menu to the other is time consuming. At any stage during the browse, a part can be viewed with a single key press. When the right part is found, another key press returns the user to the schematic ready to place the symbol.

An even easier way to select symbols is by duplication, where clicking on an already-existing symbol prompts *Ultimate* to create a duplicate ready to be placed.

If the sheer size of the libraries is not enough to impress, then the fact that either European IEC logic representations (bland boxes with funny labels) or American ansi representations (nice recognisable gate shapes) can be selected, is evidence of the experience embodied in this product.

Positioning a symbol on the schematic is particularly easy. Using the mouse to move images in real time takes a fair amount of processing and with some packages the result is a symbol that jerks across the screen overshooting the desired position. Others represent the symbol, during placement, as an easier-to-draw outline box. But that leaves the problem of remembering where on the box leads should connect.

Ulticap provides the best of both worlds, displaying an outline box that moves smoothly with the mouse, but which changes to a ghost image of the symbol, with all leads evident for alignment, when the mouse comes to rest. Rotating or reflecting a symbol is simple, and a final click on the mouse converts the ghost into the real thing.

On the schematic, symbols appear complete with identities, reference numbers and pin numbers. If, say, a *74LS04* is chosen, *Ulticap* keeps a record of how many inverters have been used, adjusts the reference and pin numbers accordingly and automatically moves on to the next device once all six in a package have been used.

Auto connect

Manual symbol connection is accomplished by drawing lines with the mouse, and connections can be drawn at any angle or limited to 90° or 45°. Connections may not start or end in mid air, only at legitimate terminals.

Connections can also be made automatically with the schematic equivalent of a point to point autorouter. Click on the terminals to connect and *Ulticap* will place the connecting lines itself, though the route may not be the one a designer would have chosen and sometimes the "neatness" of a human drawn schematic can be lost. But the attempts are respectable and the results technically correct. Whether connections are made manually or not, an automatic junction feature creates junctions as wires are linked.

Any desired width of bus is possible, and as individual connections are linked into the bus, it is the signal name that defines the electrical connection. When connecting to an existing bus, a pick-list of possible connections is presented to make life easy. Creating a new bus, or any other signal, makes use of automatic numbering, though the default name can be changed and there is even the facility to place a bar over the name to indicate a negated signal.

For allocating names to a sequence of similar signals, once the prefix or suffix is typed in, *Ultimate* helpfully increments the number as the user clicks down the signals. Up to 72 characters can be used to describe a signal.

Electrical rule checking is not unusual in cad packages. What marks *Ulticap* out from similar products is that checking is performed during wiring, with the package continually keeping an eye on connections, giving an immediate error message if, for example, there is an attempt to connect outputs together. Similarly, a warning is given if two inputs are connected with no other signal present. In either case a user can over-ride the machine, giving all the benefits of having someone helpfully looking over your shoulder without any of the embarrassment.

Occasionally everyone must face the potential nightmare of re-arranging an already wired-up schematic. *Ulticap* makes this less painful by using rubber-banding to make connections follow symbols, as the crow flies, as they are moved. Once the new position is settled, the old connections are erased from the screen and re-routed. Re-routing takes several seconds depending on the complexity of the block moved. But sit back and watch, take a few sips of coffee and you can still feel as if you are working.

To help with clarity, different entities on the schematic such as device names, identities, pin numbers, comments and grids can be turned off at will, uncluttering the schematic and allowing closer study of particular areas.

In theory, circuit diagrams can span an unlimited number of sheets and as long as signals have been named appropriately, connections will be maintained from sheet to sheet. Multi-level hierarchical diagrams can also be created.

Creating components is straightforward though time consuming, and needs good access to the manual. Symbols are drawn using lines and arcs, then pin numbers, default identifiers and package types are defined. One disadvantage of having such extensive libraries is that symbol creation is a rare enough event to forget how to do it.

The annotate utility is a good example of design automation, numbering components far quicker than a human could and with 100% accuracy. All components that have so far been labelled, such as *U?A*, will have a unique identifier allocated to turn them into say *U15A*.

Further post processing can produce a clear and readable bill of materials though it is a shame there is no spare field for an inventory number. However *Ulticap* can link to an inventory control system by outputting the BOM as an ascii file to be read into a *dBase* compatible system of the correct structure.

Hard copy

Schematic prints can be produced on plotters or printers – including lasers – but though the number of drivers looks impressive, on closer inspection there are a lot of variations on a theme, with operation limited to a small number of the most common devices. Printers include HP Laserjets, Epsons and IBM Pro-printers: there is also an extensive range of HP and Houston Instruments plotters with one or two others.

Printing is a little long winded. First step is to produce an intermediate plot file from the schematic, taking a few seconds and leaving a file on disk, then exiting *Ulticap* and entering the *Plotcap* output utility program. *Plotcap* allows selection of a printer driver and direction of the output to a file, if wanted. The print can be scaled down to one tenth of normal or up to five times larger.

Printing itself is very time consuming. *Plotcap* keeps users informed of the number of vectors it has processed: after 45min and over 100,000 vectors I decided to take lunch.

Dot matrix printing takes a while, even in draft mode, and the vector to raster conversion gives a few furry edges. But by expending a little more time, a three pass print can be created which yields very good results and makes the wait worthwhile. On narrow printers large sheets are printed in strips with a slight overlap for later re-assembly.

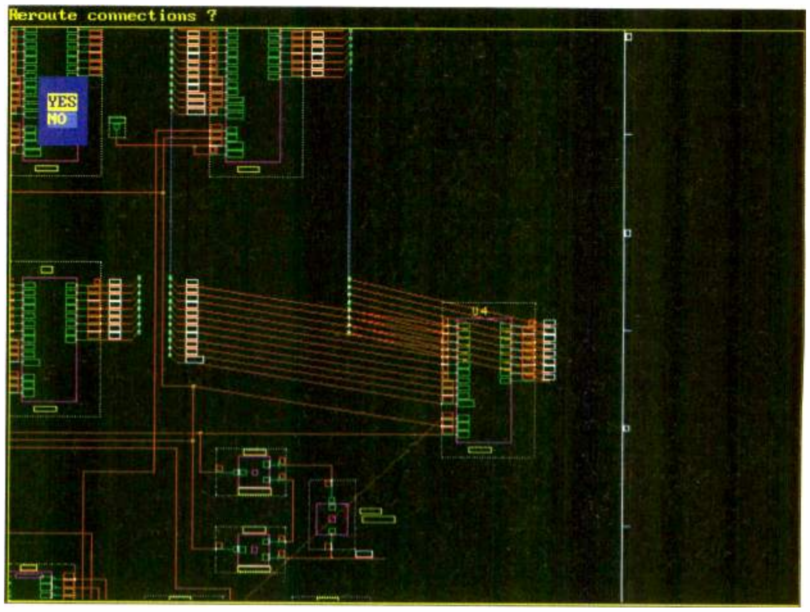

Moving a block drags all the connections with it. After moving, connections can be rerouted.

PCB layout

Ultiboard for PCB layout presents an almost identical screen to schematic capture and the menus, though different, oper-

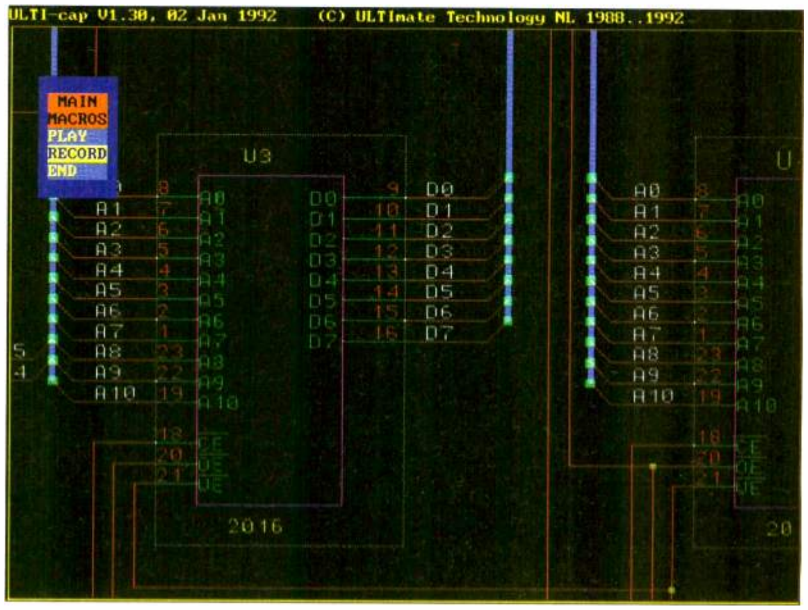

Recording a macro makes repetitive tasks easier.

Start-up and manual

Ultimate's user manual is an impressive black and gold covered A5 paperback just over an inch thick. It looks daunting but turns out to be a real gem. Not only does it cover all the features in a very readable form, it also gives detailed comments on the management of electronic designs

The tutorial booklet is a good place to start for those learning about *Ultimate*. It is fairly superficial, only covering the basics, but gives a taste of the possibilities and good use is made of supplied demonstration files. The user manual also contains a wealth of helpful advice, in addition to the more usual which-keys-to-press guidance.

Installation notes hint that getting started could be protracted. But in practice the install utility seems to handle everything: just select a few drivers for screen, printer and plotter under menu control and answer very polite questions such as "May I modify your AUTOEXEC.BAT file if needed?"

ate in the same way. Thirty two layers can be accommodated and the maximum board size is around 20in square – larger for the more expensive versions. Smallest grid size is 0.001in, as is the thinnest track if the board manufacturer can cope with it.

At around 200 components, the library is smaller than the schematic one, but still adequate, and provides a good range with plenty of surface mount chips, passives and some pin grid arrays. Unfortunately some of the devices have been designed with text over the component pins, and will need editing.

SUPPLIER DETAILS

Version	Capacity) (pins	Schematic capture	PCB layout	Combined
Challenger	700	£175	£295	£395
Entry level	1400	£290	£895	£990
Advanced	2800	£475	£2690	£2975
Professional	unlimited	£950	£4475	£4950

Ultimate Technology (UK) Ltd, 2 Bacchus House, Calleva Park, Aldermaston, Berkshire RG7 4QW. Tel: 0734 812030 Fax: 0734 815323.

Visual grid can be turned on or off and adjusted.

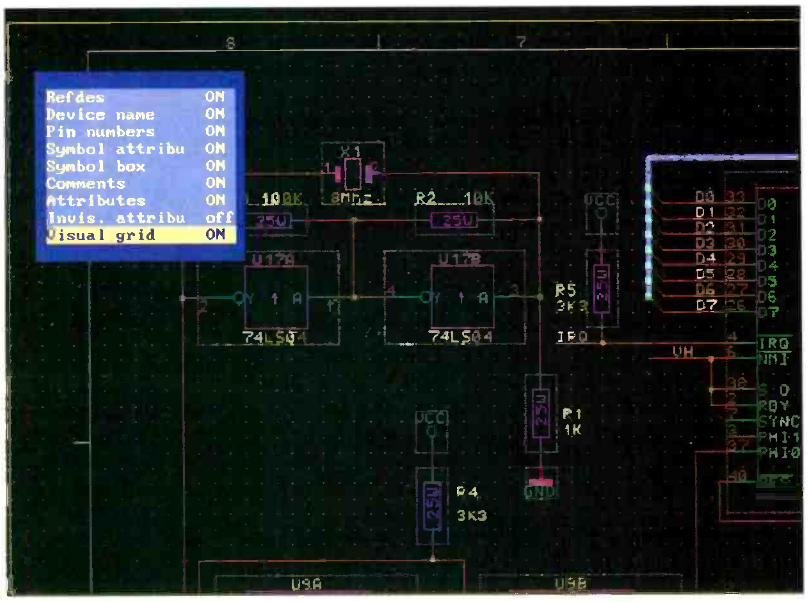

Refdes ON
Device name ON
Pin numbers ON
Symbol attribu ON
Symbol box ON
Comments ON
Attributes ON
Invis. attribu off
Visual grid ON

The starting point is to define the outline of the board, in a fairly simple drawing exercise, then read in files produced by the schematic capture programme. File structures are given in the manual and there are useful links to the output of other packages; for example, *Ultiboard* will accept files from other products such as *Orcad*. After reading in the data, components appear above the board ready to be moved into position.

The designer's judgement is used to decide where best to locate the parts. But *Ultiboard* gives some assistance with what are called *force vectors* – lines emanating from the centre of each package, designed to indicate the direction and magnitude of movement that would help reduce connection lengths. The idea is an interesting way of assisting human intuition with calculated data, graphically presented, though it gives some curious indications as parts are moved about. But with experience, the method begins to inspire trust and most users are converted.

Histograms help indicate routing channel density and, once the designer has become used to them, can be a valuable tool.

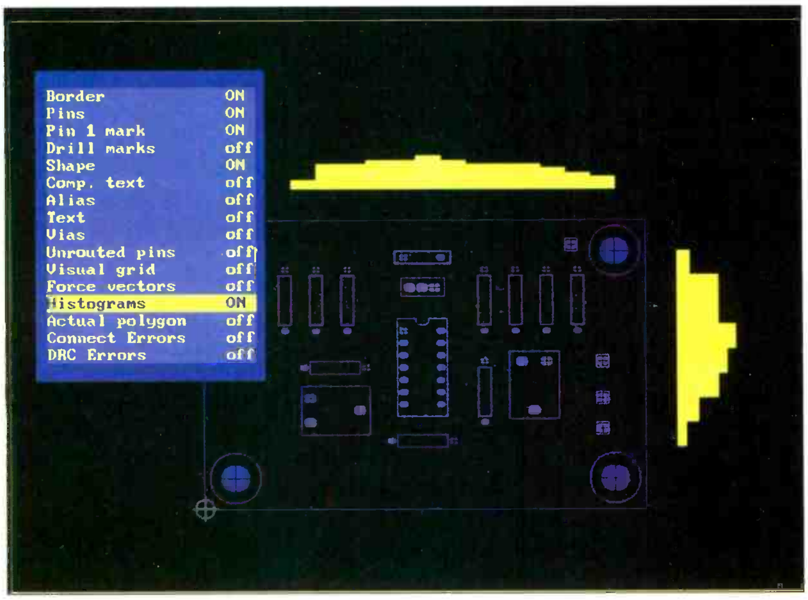

Border ON
Pins ON
Pin 1 mark ON
Drill marks off
Shape ON
Comp. text off
Alias off
Text off
Vias off
Unrouted pins off
Visual grid off
Force vectors off
Histograms ON
Actual polygon off
Connect Errors off
DRC Errors off

Another interesting aid to the designer is the plotting of histograms along the edges of the board. The manual says that these show the available routing channel density and peaks in the histograms should be avoided. Again, with experience, the information can be valuable, for example where the designer is aware that a bus has to traverse the board.

If all this visual data does not overload the designer then, at the press of a key, all the relevant connections for a part can be turned on. The limited rats' nest immediately identifies the density of tracks and in which direction they are heading.

Key to successful cad

As the manual says: "Iteration is the key to successful cad", and with all the information to hand it is simply a matter of experimentation. Moving parts is simplicity itself and if required they can be flipped over and placed on the other side of the board. Function keys are extensively used – to such an extent that a template supplied to fit over them on the keyboard would be a definite help.

Many benefits of cad come from integration of schematic capture and PCB layout, and *Ultimate* scores well here. Assuming a netlist has been imported, defining all connections, then even manual routing is speeded up: click on a pin and the program indicates all other pins that need to be connected to it. The net name is given and links, as the crow flies, can be displayed, and in a useful macro facility that eases repetitive tasks such as the creation of a bus, keystrokes are recorded and given an identity then can be played back as many times as required.

A configuration file defines a list of valid track widths and associated clearances so, for example, different standards could be called up for different jobs.

As with *Ulticap*, there is an on-line rules checker, and while the board is being created, clearances are checked against those defined in the configuration file. When a violation occurs, not only is there a bleep and a message, but a small white circle immediately shows the location of the problem. Usefully, all layers are checked even if they are not currently being displayed.

Flexible autorouter

Once critical tracks have been hand drawn the autorouter can be brought into action either for all remaining connections or a specified set. The autorouter is not the fastest around. But what it misses in speed it more than makes up for in features and flexibility, and gives very respectable results.

Many elements are configurable – such as the predominant track direction on a particular layer and whether diagonal starts to tracks are wanted – and it will work simultaneously on many layers, or it can be limited to different layer sets for different passes to organise the layout. "Trace hugging" algorithms can be enabled, causing tracks to run alongside each other as much as possible, and where the design is not critical but speed is of the essence some of the intelligence can be switched off.

Via holes are treated as a necessary evil. The program will try to minimise them if "via reduction" is selected, and will also shift those that have already been placed to make room for more tracks if things get tight later. *Ultiboard* supports blind, buried and through-the-board vias.

Plenty of memory is needed fully to exploit the autorouter, and the more memory there is, the finer the grid can be and the more possible routes there are to choose from.

The large magnitude of number crunching going on is indicated by the recommendation in the manual that the autorouter is allowed to work around the clock: prepare it during the day then set it routing overnight. This may be a little pessimistic because relatively small, not too dense boards may route in a matter of minutes.

Further improvement, in addition to via optimisation, can be gained by swapping gates and pins where this does not affect the functionality of the design. Where it is clear what need to be done, swapping can be manual. But watching the program doing it automatically is much more fun. Possibilities include gate swaps within chips, gate swaps between chips and pin swaps on gates, a menu selecting which of these are to be allowed. The program highlights the pins it is "thinking" about and after each thought, updates the force vectors and histograms. As each possibility is tried in quick succession, the screen becomes a picture of activity. The number of iterations can be specified and at the end the package quantifies its success in terms of reduction in track length. Naturally a record is kept of swaps made and by running the back annotate utility the schematic is brought in line with the layout.

Producing artwork

All the usual output devices are supported: plotters, photoplotters and printers, laser or matrix. Drivers are included for a range of popular devices and include a DXF file generator so designs can be read into mechanical design tools such as AutoCad. Like *Ulticap*, an intermediate plot file must be created, to be operated on from a separate utility. Pen speeds, aperture sizes and other parameters that need to be adjusted are all available from the set-up menu and output can be scaled from 10 to 500% in 1% steps.

A batch file is set up to define the number of plots, which layers are plotted on each one and whether or not they are to be reflected. In this way, outputting a complex multilayer board can be set up and left to complete, perhaps overnight. Different batch files can be created and called up for single sided, double sided or multilayer boards.

Confidence inspiring

Ultimate's comprehensive set of features, well tested by the existing user base, means professional users should be able to buy with the confidence that the package should meet their business needs.

There are one or two unusual features, but it is probably the quantity of libraries and quality of documentation that are its strong points.

Of the four levels on offer, *Challenger* is good value, providing a professional design environment and almost all the features of the rest of the family. More expensive versions make good use of 286 and 386 memory management so offer the capacity to deal with large and complex designs.

There is little to fault on either package.

The autorouter is impressive in its flexibility, and the performance will not disappoint. In use, both *Ulticap* and *Ultiboard* inspire the confidence of well made tools that can be relied on to see the job through.

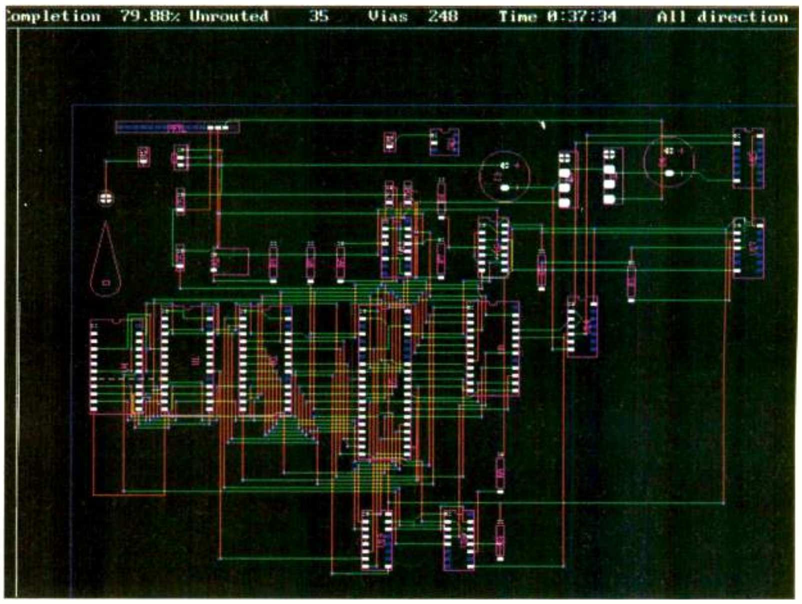

Autorouter, 80% complete after 38 minutes.

KEY FEATURES

Schematic capture:
Extensive symbol libraries.
Pin and gate swapping.
Annotation and back-annotation.
Real time electrical rule check.
Hierarchical sheet structures.
Ansi and IEC symbols.
Automatic connection.
Routing.
Bills of materials.

Board layout:
32 layers.
Force vectors.
Density histograms.
Multiple strategy autorouter.
Real time clearance check.
Via optimisation blind, buried and through board vias.
DXF translator.
Macro facility.

Ultiboard gives some assistance in where best to locate parts with its force vectors. Lines emanating from the centre of each package indicate the direction and magnitude of movement that would help reduce connection lengths.

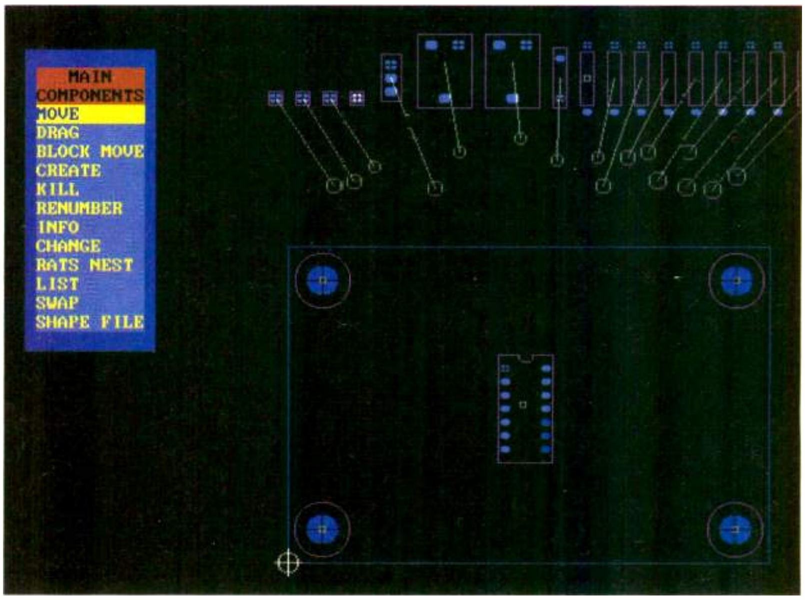

BROADCAST TECHNOLOGY tunes to a different programme

Should we prepare to watch widescreen TV? Can the present PAL system adapt itself to providing better quality pictures? Should we be reading the last rites over MAC? The world's broadcasters have never had to face so many technical development decisions in such a short period. Barry Fox reports from The International Broadcasting Convention, Amsterdam.

In spite of the confusion over professional recording, and broadcast transmission standards, the clear and logical swing is towards digital technology.

This was the message broadcast from the International Broadcast Convention recently held in Amsterdam despite pockets of analogue resistance.

Undoubted surprise of the show was the demonstration of a terrestrial HDTV system using digital transmission.

HD-Divine (DIgital VIdeo Narrowband Emission) was developed by a group of Scandinavian broadcasters, manufacturers and PTTs.

The raw data rate for this 1250-line digital system is 1.2Gbit/second, with Eureka standard compression down to 140MB/s. The Divine coder compresses this signal to 27Mbit/s to include four sound channels, each coded at 128kb/s using the *Musicam* compression system developed for Digital Audio Broadcasting.

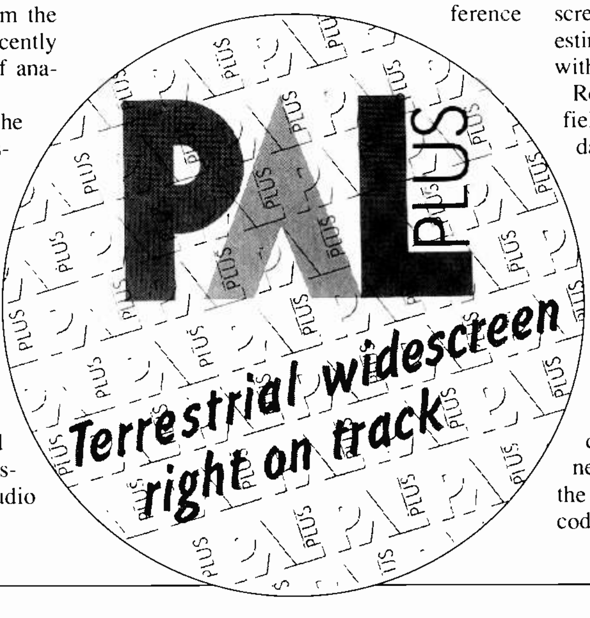

The group, comprising Teracom, Swedish Television, Telia Research, Norwegian Telecom, Telecom Denmark, Digital Vision and Sintel, believes that it will have a modulator to squeeze the digital data stream into a conventional 8MHz terrestrial tv channel by the time you read this. This paves the way for a domestic widescreen HD service.

It hopes Divine may soon become an official Eureka research project.

Its demonstrators at IBC were working with prototype real time coders and decoders. Because the broadcast signal is in digital code, it can be transmitted at much lower power than a conventional analogue TV signals. This should allow transmission in the taboo channels which lie between today's pal programme channels and are currently unused because of the risk of interference.

The timescale for Divine is long term, "before the year 2000", because there is a world of difference between showing a laboratory prototype and fabricating a set of microchips which do the same job at a price which consumers can afford.

Squeeze on Space

The IBA's labs near Winchester began work on a terrestrial digital TV system called Spectre (Special Purpose Extra Channels for Radio Communications Enhancements) in 1989. When the facilities were sold off as NTL (National Transcommunications Ltd) the Independent Television Commission gave NTL a contract to continue work on Spectre. At IBC, NTL revealed that it has also been developing its own version of the system for use with satellites. NTL's System 2000 will let broadcasters transmit several TV programmes from each satellite transponder.

Sceptre can be used either to squeeze several pal quality channels into the bandwidth of one analogue pal signal, or carry one wide screen TV programme into the home. One estimate is that Spectre could provide the UK with up to 20 extra TV programmes.

Recently NTL and the ITC ran unannounced field tests in Devon, broadcasting low level data signals in taboo channels (the channels in any area which cannot safely be used for analogue broadcasting) from the Stockland Hill and Beacon Hill transmitters. The object was to test the digital signal for error rate in hilly areas prone to multipath, and to see whether any pal viewers complained about interference. The error rate, checked by a van, looks good, and there have been no complaints.

Most satellite channels can, if suitably configured, carry two analogue pal channels. In practice they often carry only one. If the broadcast signal is converted into digital code, and the power reduced, the same bandwidth can already carry four full widescreen pal-quality programmes.

System 2000 features divisible capacity: it can deliver eight pal-quality programmes from a single transponder, each with a data rate of 12MB/s. Halving or reducing to a third (4MB/s) still delivers a service of VHS quality which might be adequate for business conferencing.

Increasing the data rate to around 20MB/s extends the system to HDTV quality.

NTL is not saying how System 2000 should be used, just offering a coder/decode which lets users make their own decisions. Chips for real time coding and decoding will be ready in November. The hardware goes on sale soon after.

Initially the price will be pitched at business users or point to point or multipoint distribution, below professional broadcast cost levels and above consumer price levels.

"But," Bruce Randall of NTL was telling people at IBC "once the chips are available, we are open to suggestion".

A consortium of Scandanavian manufacturers has taken a big step for television with the launch of Divine, a high definition digital video narrowband emission system.

NTL hopes for a further contract from the ITC, as the original comes to an end later this year.

Looking through the letterbox

Pal plus consortium of European broadcasters and manufacturers showed the widescreen, improved definition pal system, the product of three years' development. The group now describes its technology as a final system, ready to fine tune and standardise.

ZDF carried out on-air tests from German terrestrial transmitters in March and there were further tests in Hilversum last month. The next step is to start building pal-plus circuitry down to consumer price points for a commercial launch at the Berlin Funkausstellung in 1995.

Pal-plus will give terrestrial broadcasters the chance to transmit widescreen pictures, which are compatible with conventional pal receivers. When pal-plus signals are received on pal-plus sets they will not just be wider, they will be clearer too, with better resolution and fewer artifacts like cross-colour.

Unfortunately pal-plus produces letterbox pictures on conventional 4:3 sets. People will see a widescreen image with black borders at the top and bottom of the picture. On the Continent of Europe viewers are already accustomed to watching letterbox transmissions, but in the UK (like the USA) letterboxing is a new idea.

Dr Albrecht Ziemer, Technical Director of ZDF and Chairman of the pal-plus Steering Committee talks of a "soft start". Some programme material may be broadcast in 14:9 aspect ratio, as a temporary compromise between the old 4:3 and new 16:9 formats. Viewers with 4:3 sets will see only narrow black borders at the top and bottom of the screen; viewers with new widescreen sets will see narrow black curtains at each side of the screen.

Also, as part of the soft start when 10% of viewers have pal-plus sets, the broadcasters will transmit 10% of their material in letterbox; when the number of viewers with new sets rises to 20%, the percentage of letterbox material will increase accordingly.

The original plan was to make pal-plus a side panel format, with 4:3 transmissions containing digital information which new widescreen sets could decode as side panels to make 16:9 pictures. This idea was dropped for two reasons. Film producers would have had to continue shooting programmes with all the action kept to the central 4:3 area of the widescreen, for the benefit of viewers with 4:3 receivers. Also it proved impossible to stitch the side panels (which would be digital) onto the central image (which has to be analogue) without the seams showing.

Pal-plus will now store extra "helper" information as digital code in the unused, black lines of the letterbox. This helper code will enhance resolution and make up for the fact that a pal-plus set has to expand the letterbox image (which has less than 625 lines) to fill a 625 line screen.

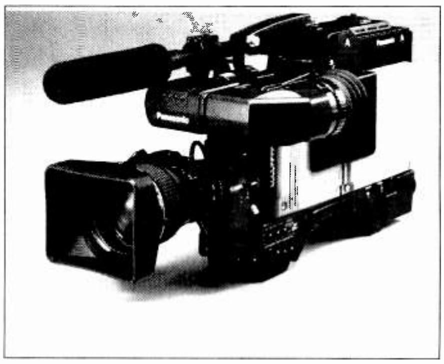

Panasonic's AQ20D is a digital processing camera

Pal-plus threat to mac

Both Dr Ziemer and Charles Sandbank, Assistant to the BBC's Director of Engineering, admit they see pal-plus as a "defensive measure". The Group's work has been done voluntarily, without any government subsidies. The broadcasters want to keep pal alive, against competition from mac and any other widescreen format that is offered to the public.

This raises the question of whether pal-plus could threaten the survival of mac, which has so far failed to sell as well its mentors Philips and Thomson had hoped.

Both Dr Theo Peek, Director of Philips' Video Display Products Division, and Jacques Sabatier, Senior Vice President of Corporate Research at Thomson Consumer Electronics, refute suggestions that mac is dead, or likely to be killed by pal-plus. They say the issue of survival and success is something which the public will decide.

Says Sabatier "Mac was optimised for satellite, pal-plus for terrestrial TV. The aim in each case is to bring 16:9 into the home. It is more constructive to talk of the two systems helping each other to achieve this than fighting".

HDTV spells end to cheap wigs, cheap game shows?

Overheard, from an engineer from Swedish Television who was looking at super clear pal-plus pictures.

"I don't want pal-plus. There is too much detail in the picture. At the moment we can get away with crude scenery. With pal-plus we will have the same problems they do with HDTV. It costs around four times as much to paint the backdrops so that they look natural".

This is just what the BBC found when shooting the Ginger Tree in HDTV. Wigs that looked fine in pal an NTSC looked phoney in HDTV.

The Swedish producer reckoned he could shoot four quiz shows a day in pal, using crude and quickly erected backdrops. With pal-plus he might well be down to one a day.

Dr Ziemer confirms that although the pal-plus group has patents on the system's key technology, it would, if asked, license use for satellite broadcasting.

"But the international regulators would have to approve its use for satellites" says Ziemer. "It is not up to the broadcasters or the manufacturers". Explains Sabatier "Under European law we cannot refuse to give anyone a licence under the pal-plus patents. It is the same with mac. We can perhaps be rather slow and create some difficulties, but in the end we cannot refuse and use the patents as a weapon".

Although the pal-plus engineers are now confident that they have cracked all the major problems in processing widescreen pictures to retain backwards compatibility with existing receivers, they still have work to do on the sound. In countries which already use Nicam digital stereo, there is no difficulty. pal-plus will use the same sound system. But in German-speaking countries, which currently use analogue stereo derived from separate carriers, there will have to be a modified Nicam system for pal-plus. This will not be ready until 1996 or 1997, a year or two after pal-plus is launched. This could discourage people in German-speaking countries from buying first generation pal-plus receivers.

Mac: dying to impress?

Meanwhile Thomson was rising to another challenge, a blistering article written by Jacques Caumartin, of the Thomson's Professional Broadcast Systems division. It was published (in *Advanced Television Markets*) on the day IBC opened and the day Caumartin left Thomson after 26 years. In the bluntest of language, Caumartin writes HD-mac off as dead unless someone can find a way of broadcasting it from terrestrial transmitters.

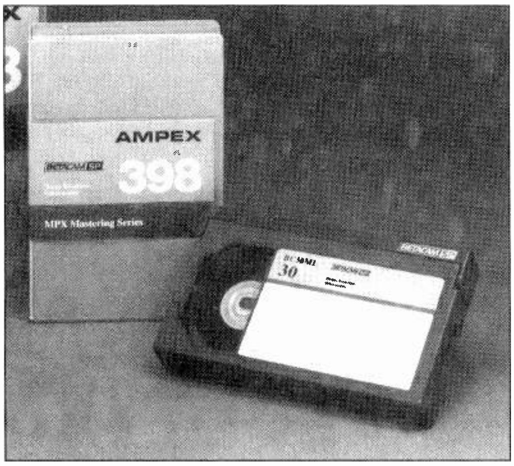

Ampex has produced improved videotape claimed to provide high overall performance in all Sony Betacam SP applications.

And, sure enough, at IBC both Thomson and Philips were giving the first demonstrations of terrestrial HD mac.

The FDL90 system from BTS is able to deliver in both conventional 4:3 and the new 16:9 formats. Will film makers be able to decide which format they will use on new productions?

There is a general perception that D2 mac and HD mac can only be distributed by satellite or wideband cable. The signal needs a bandwidth of over well over 10MHz if the analogue picture detail and the digital code used to carry all the sound, data and picture assistance information for HD display is to survive the journey to the viewer's receiver. Terrestrial TV channels have a bandwidth of 8 MHz, at best.

The IBC demonstrations were picking up HD mac signals relayed by terrestrial transmitters from the Telecom 2 satellite. The satellite took its source HD mac signals from France Telecom in Paris. The PTT Telecom tower in Amsterdam then picked up these signals from the satellite's transponder 3, converted them from FM to AM and re-broadcast them with 200W transmitters in the UHF band.

The widescreen pictures received at IBC looked good. So how was this seemingly impossible trick done?

The PTT terrestrial transmitter was working on two adjacent terrestrial TV channels (33 and 34). This gave a 12MHz working bandwidth which was more than enough to carry the 11.25MHz HD mac signal through unscathed.

In practice very few countries have enough UHF capacity available to allocate two channels to a single transmission. The IBC demonstrations do nothing to answer Caumartin's challenge.

Slow motion supercomputer

TV viewers watching the Wimbledon tennis tournament saw the first trials of Gazelle, on show at IBC from British electronics company Snell and Wilcox.

S and W worked with the BBC's Designs Department to develop Gazelle in time for the Summer Olympics in Barcelona. It was then tested with a side camera on the Centre Court. Gazelle plays the magical trick of converting the normally jerky movements seen when a video or film recording is replayed in slow motion, into smooth slow movement.

Until now the only way to get smooth slow motion from film or video was to shoot the original at high speed. Gazelle works with any material shot at any speed. So it can also be used to convert old silent film material, shot at 16 or 18 frames per second, into any of the different picture speeds (24, 25 or 30 Hz) used by the cinema and TV systems in Europe, the US and Japan.

The core idea is to analyse each picture of a motion sequence and detect what objects are moving, where they are going in the picture and at what speed and angle. Gazelle uses this information to build new images which bridge the gap between each source image. If the slomo sequence is playing at one tenth normal speed, then Gazelle builds nine images to bridge the gap. If the source is running at one hundredth normal speed, Gazelle constructs 99 gap-bridging images.

"This is a lot harder than it sounds" says S amd W's research director, Roderick Snell, "because any mistakes will mean that the end of the constructed sequence does not flow smoothly into the next source image. You have to get the trajectory of each and every moving object just right".

BBC engineers spent many man years in the 80s working on motion analysis as a means of reconstructing high definition TV pictures from signals which have been compressed for recording and transmission. At the time, the theoretical techniques were too expensive to implement on a commercial basis. Snell and Wilcox built a working system from military image processing chips made by Marconi and Ferranti.

Gazelle is really a supercomputer, working as fast as, or faster than, a Cray. Working in real time, it analyses each of the 700 pixels in each of the 625 lines of the 25 pictures a second used for European TV. Gazelle then computes the trajectory of each moving object, with accuracy down to one eighth the size of each pixel. From this reservoir of sub-pixel

SMALL SELECTION ONLY LISTED – EXPORT TRADE AND QUANTITY DISCOUNTS – RING US FOR YOUR REQUIREMENTS WHICH MAY BE IN STOCK

Tektronix 475 – 200Mc/s oscilloscopes – £400 less attachments to £500 C/W manual probes etc.
Marconi TF2008 – AM-FM signal generator – Also sweeper – 10Kc/s – 510Mc/s – from £350 tested to £500 as new with manual – probe kit in wooden carrying box.
HP DC Current source type 6177C – £200.
HP Frequency comb generator type 8406A – £400.
HP Sampling Voltmeter (Broadband) type 3406A – £200.
HP Vector Voltmeter type 8405A – £400 to £600 – old or new colour.
HP Synthesiser/signal generator type 8672A – 2 to 18GHz £4000.
HP Oscillographic recorder type **7404A** – **4** track – £350.
HP Plotter type 9872B – 4 pen – £300.
HP Sweep Oscillators type 8690 A & B + plug-ins from 10Mc/s to 18GHz also 18-40GHz. P.O.R.
HP Signal Generators type 626 – 628 – frequency from 450Mc/s to 21GHz.
HP Network Analyser type 8407**A** + 8412A + 8601**A** – 100Kc/s – 110Mc/s – £500–£1000.
HP 432A–435A or B Power Meters + Powerheads – 10Mc/s–40GHz – £200–£650.
HP Down Converter type 11710B – .01-11Mc/s – £450.
HP Pulse Modulator type 11720A – 2-18GHz – £1000.
HP Modulator type 8403**A** – £100-£200.
HP Pin Modulators for above-many different frequencies – £150.
HP Counter type 5342A – 18GHz – LED readout – £1500.
HP Signal Generator type 8640B – Opt001 + 003 – .5-512Mc/s AM/FM – £1000.
HP Spectrum Display type 3720A £200 – HP Correalator type 3721**A** £150.
HP 37555 + 3756A – 90Mc/s Switch – £500.
HP Amplifier type 8447A – .1-400Mc/s £200 – HP8447F .1-1300Mc/s £400.
HP Frequency Counter type 5340A – 18GHz £1000 – rear output £800
HP 8410 – A – B – C Network Analyser 110Mc/s to 12GHz or 18GHz – plus most other units and displays used in this set-up – 8411**A** – 8412 – 8413 – 8414 – 8418 – 8740 – 8741 – 8742 – 8743 – 8746 – 8650. From £1000.
HP Signal Generator type 8660C – .1-2600Mc/s. AM/FM – £3000. 1300Mc/s £2000.
HP Signal Generator type 8656A – 0.1-990Mc/s. AM/FM – £2000.
HP 3730B Mainframe £200.
HP 8699B Sweep PI – 0.1-4GHz £750 – HP8690B Mainframe £250.
Racal/Dana Interface type 9932 – £150.
Racal/Dana GPIB Interface type 9934**A** – £100.
Racal/Dana 9301A-9302 RF Millivoltmeter – 1.5-2GHz – £250-£400.
Racal/Dana Counters 9915M – 9916 – 9917 – 9921 – £150 to £450. Fitted FX standards.
Racal/Dana Modulation Meter type 9009 – 8Mc/s – 1.5GHz – £250.
Racal – SG Brown Comprehensive Headset Tester (with artificial head) Z1A200/1 – £350.
EIN 310L. RF Power Amp – 250KHz – 110Mc/s – 50Dbs – £250.
Marconi AF Power Meter type 893B – £200.
Marconi Bridge type TF2700 – £150.
Marconi/Saunders Signal Sources type – 6058B – 6070A – 6055B – 6059A – 6057B – 6056 – £250–£350. 400Mc/s to 18GHz.
Marconi TF1245 Circuit magnification meter + 1246 & 1247 Oscillators – £100-£300.
Marconi microwave 6600A sweep osc., mainframe with **6650** PI – 18-26.5GHz or 6651 PI – 26 5-40GHz – £1000 or PI only £600.
Marconi distortion meter type TF2331 – £150. TF2331A – £200.
Thurlby convertor 19 – GP – IEEE – 488 – £150.
Microwave Systems MOS/3600 Microwave frequency stabilizer – 1GHz to 40GHz £1k.
Bradley Oscilloscope calibrator type 156 – £150.
Tektronix Plug-ins 7A13 – 7A14 – 7A18 – 7A24 – 7A26 – 7A11 – 7M11 – 7S11 – 7D10 – 7S12 – S1 – S2 – S6 – S52 – PG506 – SC504 – SG502 – SG503 – SG504 – DC503 – DC508 – DD501 – WR501 – DM501A – FG501A – TG501 – PG502 – DC505A – FG504 – P.O.R.
Ailtech Stoddart receiver type 17/27A – .01–32Mc/s – £2500.
Ailtech Stoddart receiver type 37/57 – 30-1000Mc/s – £2500.
Ailtech Stoddart receiver type NM65T – 1 to 10GHz – £1500.
Gould J3B Test oscillator + manual – £200.
Image Intensifiers – ex MOD – tripod fitting for long range night viewing – as new – £1500-£2000.
Infra-red Binoculars in fibre-glass carrying case – tested – £100 Infra-red AFV sights £100.
ACL Field intensity meter receiver type SR – 209 – 6. Plugs-ins from 5Mc/s to 4GHz – P.O.R.
Systron Donner Counter Model 6057 – 18GHz – £800.
Tektronix 491 spectrum analyser – 1.5GHz-40GHz – as new – £1000 or 10Mc/s 40GHz.
Tektronix Mainframes – 7603 – 7623A – 7633 – 7704A – 7844 – 7904 – TM501 – TM503 – TM506 – 7904 – 7834 – 7104.
Knott Polyskanner WM1001 + WM5001 + WM3002 + WM4001 – £500.
Ailtech 136 Precision test RX + 13505 head 2 – 4GHz – £350.
SE Lab Eight Four – FM 4 Channel recorder – £200.
Ailtech 757 **Spectrum Analyser** – 001 22GHz – Digital Storage + Readout – £3000.
Dranetz 606 Power line disturbance analyser – £250.
Precision Aneroid barometers– 900-1050Mb – mechanical digit readout with electronic indicator – battery powered. Housed in polished wood carrying box – tested – £100-£200-£250. 1, 2 or 3.
B & K Sound Level Meter type 2206– small – lightweight – precision – ½″ microphone – in foam protected filled brief type carrying case with windshield & battery + books + pistol grip handle – tested – £170. Carr: £8. – B & K 2206 Meter + Mike + Book – less carrying case etc. – £145 Carr: £8. **DISCOUNT ON QUANTITY.**

HP141T SPECTRUM ANALYSERS – ALL NEW COLOURS
TESTED WITH OPERATING MANUAL
HP141T+8552A or B IF-8553B RF – 1kHz–110Mc/s-A IF – £1300 or B IF – £1400.
HP141T+8552A or B IF-8554B RF – 100kHz–1250Mc/s-A IF – £1400 or B IF – £1500.
HP141T+8552A or B IF-8555A RF – 10Mc/s–18GHz-A IF – £2400 or B IF – £2500.
HP141T+8552A or B IF-8556A RF – 20Hz–300kHz-A IF-A IF – £1200 or B IF – £1300
HP8443A tracking generator/counter – 100kHz–110Mc/s – £500.
HP8445B tracking pre-selector DC–18GHz – £750

HP ANZ UNITS AVAILABLE SEPARATELY – NEW COLOURS – TESTED.
HP141T mainframe – £550 – 8552A IF – £450 – 8552B IF – £550 – 8553B RF – 1kHz–110Mc/s – £550 – 8554B-RF – 100kHz–1250Mc/s – £650 – 8555A-RF – 10Mc/s–18GHz – £1550.
HP 3580A LF-spectrum analyser – 5kHz to 50kHz – LED readout – digital storage – £1600 with instruction manual – internal rechargeable battery.
Spectrascope 11 SD335 (S.A.) realtime LF analyser – 20Hz to 50kHz – LED readout with manual – £500 tested.
Tektronix 7D20 plug-in 2-channel programmable digitizer – 70 Mc/s – for 7000 mainframes – £500 – manual – £50.
Datron 1065 Auto Cal digital multimeter with instruction manual – £500
Racal MA 259 FX standard. Output 100kc/s–1Mc/s–5Mc/s – internal NiCad battery – £150.
Aerial array on metal plate 9″×9″ containing 4 aerials plus Narda detector – .100–11GHz. Using N type and SMA plugs & sockets – ex eqpt – £100.
EIP 451 microwave pulse counter 18GHz – £1000.
Marconi RF Power Amplifier TF2175 – 1.5Mc/s to 520Mc/s with book – £100.
HP 8614A Signal Generator 800Mc/s to 2.4GHz – old colour – £300. New colour – £600.
HP 8616A Signal Generator 1.8GHz to 4.5GHz – old colour – £200. New colour – £400.
HP 8620A or 8620C Sweep Generators – £400 to £1000 with IEEE.
Marconi 6155A Signal Source – 1 to 2 GHz – LED readout – £600.
Schlumberger 2741 Programmable Microwave Counter – 10Hz to 7.1GHz – £750
Schlumberger 2720 Programmable Universal Counter 0 to 1250Mc/s – £600.
HP 37203A HP-IB Extender – £150.
PPM 411F Current Reference – £150.
HP 5363B Time Interval Probes – £150.
HP 8900B Peak Power Calibrator – £100.
HP 59313A A/D Convertor – £150.
HP 59306A Relay Actuator – £150.
HP 2225CR Thinkjet Printer – £100.
TEK 576 Calibration Fixture – 067-0597-99 – £250
HP 4437A 600 Ohm Attenuator – £100.

HP 8006A Word Generator – £150.
HP 1645A Data Error Analyser – £150.
Texscan Rotary Attenuators – BNC/SMA 0-10 60-100DBS – £50-£150.
HP 809C Slotted Line Carriages – various frequencies to 18GHZ – £100 to £300.
HP 532-536-537 Frequency Meters – various frequencies – £150-£250.
Barr & Stroud variable filter EF3 0.1Hz–100kc/s + high pass + low pass – £150.
S.E. Lab SM215 Mk11 transfer standard voltmeter – 1000 volts.
Ailtech Stoddart P7 programmer – £200.
H.P. 6941B multiprogrammer extender. £100.
Fluke Y2000 RTD selector + **Fluke 1120A** IEEE-488-translator + Fluke 2180 RTD digital thermometer + 9 probes. £350 all three items.
H.P. 6181 DC current source. £150
H.P. 59501A – HP-IB isolated D/A/power supply programmer.
H.P. 3438A digital multimeter.
H.P. 61775 DC current source.
H.P. 6207B DC power supply.
H.P. 741B AC/DC differential voltmeter standard (old colour) £100.
H.P. 6209B DC power unit.
Fluke 80 high voltage divider.
Fluke 431C high voltage DC supply.
Tektronix M2 gated delay calibration fixture. 067-0712-00
Tektronix precision DC divider calibration fixture. 067-0503-00
Tektronix overdrive recovery calibration fixture. 067-0608-00
Avo VCM163 valve tester+book £300.
H.P. 5011T logic trouble shooting kit. £150.
Marconi TF2163S attenuator – 1GHz. £200.
PPM 8000 programmable scanner
H.P. 9133 disk drive + 7907A + 9121 twin disk.
Fluke 730A DC transfer standard.
B&K 4815 calibrator head.
B&K 4812 calibrator head
Farnell power unit H60/50 – £400 tested.
H.P. FX doubler 938A or 940A – £300.
Racal/Dana 9300 RMS voltmeter – £250
H.P. sweeper plug-ins – 86240A – 2–8.4GHz – 86260A – 12.4–18GHz – 86260AH03 – 10–15GHz – 86290B – 2–18.6GHz. 86245A 5.9–12.4GHz.
Telequipment CT71 curve tracer – £200.
H.P. 461A amplifier – 1kc–150Mc/s – old colour – £100.
H.P. 8750A storage normalizer.
Tektronix oscilloscopes type 2215A – 60Mc/s – c/w book & probe – £400.
Tektronix monitor type 604 – £100.
Marconi TF2330 or TF2330A wave analysers – £100–£150
HP5006A Signature Analyser £250 + book
HP10783A numeric display. £150.
HP 3763A error detector £250.
Racal/Dana signal generator 9082 – 1.5–520Mc/s – £800.
Racal/Dana signal generator 9082H – 1.5–520Mc/s – £900.
Claude Lyons Compuline – line condition monitor – in case – LMP1+LCM1 £500
Efratom Atomic FX standard FRT – FRK – .1–1–5–10Mc/s. £3K tested.
Muirhead fax receivers K649 – **TR4** – solid state – speed – 60–90–120–240–auto – IC 288-576 – auto. £250 with book. **Weather maps** – paper rolls available. £2 each.
Racal 4D recorder – £350 – £450 in carrying bag as new.
HP8350A sweep oscillator mainframe + HP11869A RF PI adaptor – £1500.
Ailtech – precision automatic noise figure indicator type 75 – £250.
Adret FX synthesizer 2230A – 1Mc/s. £250.
Tektronix – 7S12–7S14–7T11–7S11–S1–S52–S53.
Rotek 610 AC/DC calibrator. £2K + book.
Tektronix 7L12 analyser – .1Mc/s–1 8GHz. £1500.
Clark Scam Heavy Duty 40′ Telescopic Pneumatic Masts – retracted 7′8″ – head load 40lbs – with or without supporting legs & erection kit – in bag + handbook – £200-£500.
Clark Scam Heavy Duty 70′ Telescopic Pneumatic Masts – retracted 13′5″ – head load 90lbs – with or without legs + erection kit + handbook – £500-£800.
Marconi TF2950 test set – £200.
Marconi TF2016 signal generator – £150.
Marconi TF2173 synthesizer – £150.
Marconi TF2015 signal generator – £150.
Marconi TF2171 synthesiser – £150.
Marconi TF2370 spectrum analyser – 110Mc/s – £1500–£2k.
Marconi TF2512 RF power meter – 10 or 30 watts – 50 ohms – £80.
Marconi multiplex tester type 2830.
Marconi digital simulator type 2828A.
Marconi channel access switch type 2831.
Marconi automatic distortion meter type TF2337A – £150.
Marconi TF2370 spectrum analyser + TK2373 **FX** extender 1250Mc/s + tracking generator – £3k.
Marconi mod meters type TF2304 – £250.
HP 746A high voltage amp – HP **745A** AC calibrator – both – £250
HP 5240A counter – 10Hz to 12.4GHz – £400.
HP 3763A error detector.
HP 8016A word generator.
HP 489A micro-wave amp – 1–2GHz.
HP 3582A analyser LF–25kc/s – £2.5k.
HP 8565A spectrum analyser – .01–22GHz – £4k.
HP 5065A rubidium vapour **FX** standard – £5k.
Fluke 893A differential meters – £100 ea.
Systron Donner counter type 6054B – 20Mc/s–24GHz – LED readout – £1k.
Racal receivers – RA17L – RA1772 – RA1779 – RA1792. P.O.R
Takeda Riken TR4120 tracking scope + TR1604P digital memory
EG&G Parc model 4001 indicator + 4203 signal averager PI.
Systron Donner 6120 counter/timer A+B+C inputs – 18GHz – £1k.
Racal/Dana 9083 signal source – two tone – £250.
Systron Donner signal generator 1702 – synthesized to 1GHz – AM/FM.
Systron Donner microwave counter 6057 – 18GHz – Nixey tube – £700.
Datron 1065 Autocal multimeter – £500.
Racal/Dana synthesized signal generator 9081 – 520Mc/s – AM–FM.
Farnell SSG520 synthesized signal generator – 520Mc/s – £500.
Farnell TTS520 test set – £500 – both £900.
Tektronix plug-ins – AM503 – PG501 – PG508 – PS503A.
Tektronix TM515 mainframe + TM5006 mainframe.
Tektronix CG5001 programmable calibration generator – £1k.
Cole power line monitor T1085 – £250.
Claude Lyons LCM1P line condition monitor – £250.
Rhodes & Schwarz power signal generator SLRD-280 – 2750Mc/s.
Rhodes & Schwarz S parameter test adaptor .5–5200Mc/s ZPV-Z5.
Rhodes & Schwarz vector analyser – ZPV+E3 tuner – .3–2000Mc/s.
Rhodes & Schwarz Polyskop IV SWOB 4–1000Mc/s – 50 ohms.
Bell & Howell TMA3000 tape motion analyser – £250
Ball Efratom PTB-100 rubidium standard mounted in Tek PI.
Ball Efratom rubidium standard PT2568-FRKL.
Trend Data tester type 100 – £150.
Farnell electronic load type RB1030-35.
Fairchild interference analyser model EMC-25 – 14kc/s–1GHz.
Fluke 1720A instrument controller+keyboard.

ITEMS BOUGHT FROM HM GOVERNMENT BEING SURPLUS. PRICE IS EX WORKS. S.A.E. FOR ENQUIRIES. PHONE FOR APPOINTMENT OR FOR DEMONSTRATION OF ANY ITEMS. AVAILABILITY OR PRICE CHANGE. VAT AND CARR., EXTRA. ITEMS MARKED TESTED HAVE 30-DAY WARRANTY.

Johns Radio, Whitehall Works, 84 Whitehall Road East, Birkenshaw, Bradford BD11 2ER. Tel. No. (0274) 684007. Fax 651160.

CIRCLE NO. 118 ON REPLY CARD

information the computer builds conventional pal images which take the moving object along its predicted trajectory. The constructed images thus contain as much detail as the source images.

Where the source images are clear, Gazelle builds clear and smooth action. Where the images are blurred or too fast to be captured by the camera (as with some racket swings) the reconstructed images may also be blurred or missing. But the overall result looks deceptively natural.

Snell and Wilcox will now adapt the system for use when converting TV programmes from the European 25Hz rate to North American and Japanese 30Hz rate. Gazelle will also be used to smooth judder on panning shots and for old silent film material up to TV speed.

Gazelle costs £190,000. The DTI has paid around 40% of the £2 million development cost.

Changing standards in video

Broadcasters are moving inexorably from analogue to digital recording. The makers of recorders all agree that standards are essential, but most believe their own format should be the standard. The result is a mess of confusion, bridging analogue and digital domains.

The first video recorders, made in 1956 by Ampex in the US, were huge and used open spools of 50mm tape. Recording was analogue. Sony led the market into spools of 25mm (1in) tape and 19mm tape in U-Matic cassettes, both still analogue. Later, Ampex became heavily committed to C format.

Answering the need for field recorders and camcorders, Sony and Panasonic developed formats which use 12.5mm tape in cassettes. Panasonic's MII is loosely based on domestic VHS and Sony's Betacam built on domestic Beta. SP then built on Betacam.

The first digital standard, dubbed D1, records component video according to CCIR standard 601. The luminance signal is recorded separately from the two chrominance signals. Digital coding is in 8-bit words with a raw picture data rate of 216Mbit/s. The 601 standard now provides the option for 10-bit coding but it is not implemented in D1 machines.

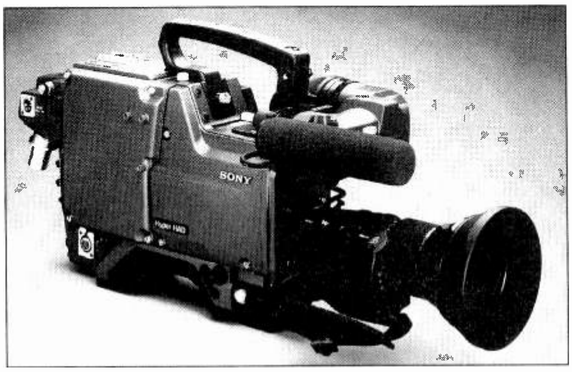

Combining portability and technology – Sony's BVP-90P.

The EBU's Serial Digital Interface provides a standard for connecting digital machines of either 8 or 10 bit standard, with a data link running at 270MBits/s. The D1 cassette uses 19mm cassette tape, like a U-Matic but the cassettes are not the same. The D1 standard, written by the SMPTE, defines a track layout which lets the recorder interchange 625 and 525 line recordings.

To reduce costs Ampex proposed the D2 system. D2 uses a D1 cassette but records the TV signal in its composite form as transmitted to the public. Luminance and chrominance is mixed together into a single composite signal. This reduces raw data rate to around 150Mb/s (depending on the TV standard used). Coding is 8-bit.

Japanese state broadcaster NHK developed D3, manufactured and sold under licence by Panasonic. D3 records composite video at similar data rate to D2 but uses cassettes of 12.5mm tape. After a year of production, Panasonic has sold over 3000 machines.

One D3 cassette can hold four hours of unbroken programme. The debit is that quality suffers if the recording is repeatedly copied for editing or effects.

Panasonic now has a new component system known (although not officially so by Panasonic) as D5. Britain's Channel 4 has chosen D5 for its new studio centre at Horseferry Road. D5 is a component system, with no bit rate reduction, giving just over two hours from a single large size cassette.

There is no D4; the number 4 is unlucky in Japan.

Both D3 and D5 use the same 18µm track pitch and drum speed of 100Hz. The difference is that for D5, the linear tape speed doubles from D3's 83.88 mm/s. Coding is 10-bit, with luminance sampling at 13.5MHz. The full data rate fits into the 270Mb/s Serial Digital Interface now agreed as an industry standard.

The D5 machine will handle either 4:3 or 16:9 material, and can be switched to a sampling rate of 18MHz for 16:9 recording with full resolution. At this rate it records with 8-bit code, to keep within the SDI standard data rate.

When the D5 machine plays back a D3 recording it decodes and delivers it as a component signal.

Panasonic argues that 10 bit coding gives higher resistance to quality loss with repeated dubbing. The disadvantage is that maximum playing time is halved from four hours to two hours per cassette. D5 machines will play back D3 recordings and broadcasters can choose the format to suit their needs.

Typifying the longstanding rivalry between Sony and Panasonic, Sony is countering D5 with a digital version of Betacam. Digital SP will record digital component video on a cassette the same size as those used for analogue SP. Some Digital SP machines will also play back analogue Betacam recordings.

Ampex DCT system uses 2:1 bit rate reduction and DCT coding.

Digital Betacam uses 2:1 data compression to reduce the bit rate of the component signal recorded on tape and thus reduce costs of the equipment and extend playing time. A large cassette will hold two hours. Machines come in 625 line pal and (probably later) 525 line NTSC versions. They are not switchable between formats because the tape track layout is simpler than D1.

Ampex now promises DCT, a studio production and post production format. The design aim was to offer a component format, switchable between 625 and 525 line operation, at much lower cost than D1. DCT builds on work done by Ampex for data storage. DCT is an 8-bit system which, like Digital Betacam, uses 2:1 bit rate reduction. Ampex is cagey abut details but says that, as the name implies, discrete cosine transform coding is used. Data rate is around half the D1 standard of 270Mb/s.

Although both Sony's Digital Betacam and Ampex's DCT use bit rate reduction, both do their compression work only on single fields (whereas more drastic compression systems, like MPEG standard for CD-I Full Motion Video, work on several fields at the same time). Single field working lets the DCT or Digital Betacam machine work like a conventional VTR, with freeze frame display and single field editing.

Ampex had DCT hardware working on the open stand. Sony was showing Digital Betacam in a private room, by appointment only. Panasonic was also demonstrating D5 only for press and prospective customers in a back room, using a D3 machine with two racks of outboard electronics. Anyone from a rival manufacturer was rigidly excluded.

No visible difference?

Competition between formats has triggered a hot debate on the pros and cons of compression. This debate will run and run.

Compression works on a simple principle but is far from simple to implement, especially in real time. The simple principle is that in every picture there is great deal of redundant information, which need not be coded. In comparison to the MPEG FMV compression systems, the broadcast compression systems are very mild, just 2:1, to halve the data rate.

Doubters say there is no such thing as a free lunch. Any compression of the picture signals must create some problems, even if they are not recognised until years into the future. These are the doubts which led Channel 4 to chose Panasonic's D5, with no compression.

Panasonic stresses that neither D1, D2, D3 nor D5 uses any data compression.

In rebuttal, Ampex claims, only rather vaguely, that optimisation of DCT for studio use makes eight bits work like 10. Sony argues that when Betacam Digital compresses the digital code, it is taking advantage of advances in electronics to simplify the mechanics, without visibly compromising picture quality during normal editing. It has given demonstrations comparing D1 with Digital Betacam and suggest that once the tape has been copied with compression, with no perceptible loss of quality, data-compressed tapes can be copied 30 times with no perceptible quality loss.

Norwegian national broadcaster NRK copied Digital Betacam material through ten generations before deciding that it would be a safe bet for use at the 1994 Winter Olympics. NRK's engineers say they could see "no visible difference".

Random access video

Back in the analogue domain, imagine an editing system that gives instant access to different parts of the same recording, with cross cuts controlled by time code. Pioneer's Video Disc Recorder delivers just this.

The system uses magneto-optical disc technology which allows the disc to be used, erased and re-recorded. A pal version of the NTSC hardware will go on sale in the New Year for around £25,000. The discs will cost £800 but can be re used a million times.

Magneto-optical recording technology is of course not new; the computer industry already uses it. A 30cm glass blank coated with rare earth materials is tracked by a laser spot while bathed in a magnetic field. As the beam changes its intensity the surface spot gets hotter and colder and switches its magnetic state in line with the applied field.

The recording is then replayed, much like a pressed disc, with a lower-powered laser beam and polarising filter that detect the small changes in optical characteristic caused by the magnetic pattern. MO technology can work with either digital or analogue signals. Pioneer's VDR makes FM analogue component recordings. So far engineers have found difficulty getting good bandwidth and signal-to-noise ratio from analogue magneto-optical systems. But Pioneer has achieved a bandwidth for VDR of 4.8MHz, and claims a signal-to-noise ratio of 46 dB in the centre of the disc, with only a 3dB degradation at each end of the disc recording, and no noticeable degradation after repeated re-use.

The VDR deck can skip from the beginning to end of its 32 minute recording in just 0.3 seconds. But even this blinding speed is not fast enough for real time editing cuts. So Pioneer plays a clever trick to make access instant. The VDR has two separate laser heads. While one head plays one sequence of a recording, the other searches out the next sequence. Using time code to identify start and stop points the VDR then switches seamlessly from head to head and sequence to sequence.

Having two heads also lets the VDR erase one recording just ahead of a recording made by the other. Previous systems have required an erase pass before a fresh recording can be made. The Pioneer VDR thus works like tape, giving direct overwrite or existing recordings, but with far faster access than tape can ever offer. The twin head readout facility allows a recording to be replayed as it is recorded, as from a tape recorder with confidence heads. And once material has been copied to the disc there is no need to re-copy through an extra generation for cross-cut editing.

When the edited copy is taken from the disc all the sequences are being sourced from the same first generation copy. Pioneer says it is looking at ways of extending playing time from 32 minutes, and may eventually move into the digital domain. ■

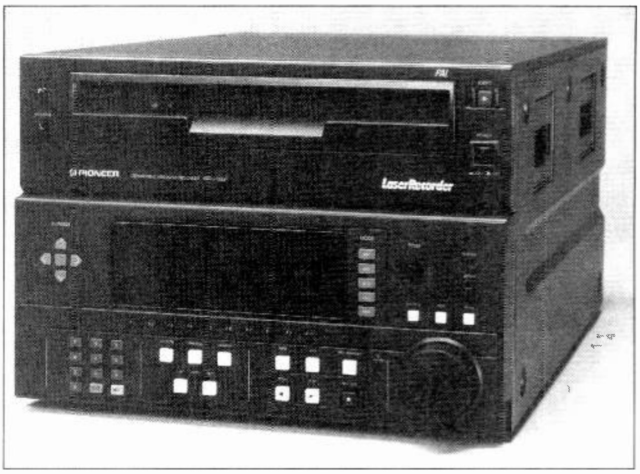

Pioneer's LaserRecorder is claimed to be the first rewritable videodisc recorder that conforms to the pal TV format.

IBC: Britain loses British show

"Today no trains to Brighton" mocked signs outside the RAI Conference Centre in Amsterdam during the International Broadcasting Convention held there in early July.

"This has brought in a lot of work for us all" said the taxi driver who took me across town to a press evening.

Meanwhile British government flunkeys were swanning round the show pathfinding a route for the British Ambassador to Holland, who was visiting.

It is a safe bet that the Ambassador did not dare relay back to Her Majesty's Government, and Michael Heseltine and the DTI in particular, what a disgrace it is that this British show has had to move abroad to find a suitable venue.

As Tony Lawes, Publicity Director for the IBC, put it with some obvious regret: "We are here at RAI because we don't know anywhere better. And we have no plans to move anywhere else".

The bottom line is that there is nowhere in the UK to match the RAI Centre for facilities. It is on a short direct train line from Amsterdam Schipol airport. It is right by a main road. There are plenty of hotels and restaurants within walking distance, and a taxi ride to town centre is easy and cheap.

The IBC outgrew the hotels in Park Lane. Then it outgrew Brighton. Anyone who had struggled with the cramped facilities knew that. And getting to Brighton from Heathrow was a nightmare. Driving there from London, or using the M25 to orbit London, can be a miserable experience. Only the train is relatively easy.

Birmingham has the space at its National Exhibition Centre for IBC, but there are nowhere near enough hotel rooms in the area. The IBC needs 15,000 rooms. Delegates do no want to have to travel in and out of Central Birmingham to eat and sleep. As Lawes puts it: "There is no ambience at the NEC". Anyone who has been stuck there knows what he means.

If anything RAI is a bit too big. The press facilities were relatively poor. The air-conditioning in the main halls was unfinished and suspect. One plan was to hose water over the outside roof if things got too bad. But IBC worked and may well grow into the RAI space.

If the British Ambassador had eyes to see he will have sent a postcard to Michael Heseltine at the DTI which read "Having a wonderful time at RAI. What Britain needed was something like this – but don't bother about it now. It's too late".

BF

Microprocessor Development Tools

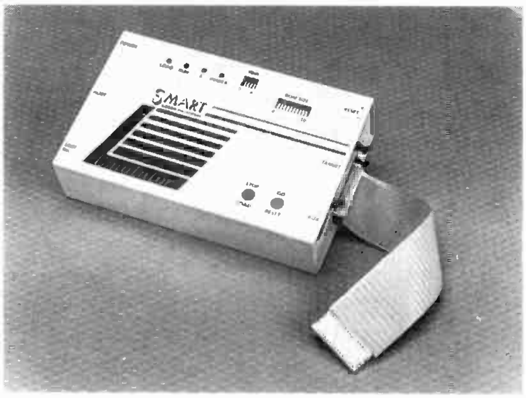

ROM/RAM EMULATOR

- ROM sizes from 2716 to 64 Mbit !
- Full bi-directional communications
- Emulates all 24, 28, 32 & 40 pin devices
- Fast download - loads 4Meg in 10 seconds
- Split and shuffle and paged ROM capability

UNIVERSAL ASSEMBLER

- Relocatable - fast assembly
- Caters for ALL microprocessors and controllers
- Iterative macros
- Intelligent jump facilities
- Linker and MAKE facility

8051 DEVELOPMENT

- Pascal, C and Modula2 Compilers
- Simulator, Cross-Assembler, Linker and Editor
- Source level Debugger
- Multitasking support
- Supports ALL 8051 variants

PROGRAMMERS

- Universal programmer
- Low Cost E(E)PROM Programmer

EMULATORS - SIMULATORS - COMPILERS - ASSEMBLERS - PROGRAMMERS

8051 8085 Z8 68020 77C82 80C552 320C25 68HC11 6301 6502 87C751 65816 Z80 6809 8096 7720 MIPS etc.

2 Field End, Arkley, Barnet, Herts EN5 3EZ Telephone: 081-441 3890

SMART COMMUNICATIONS

CIRCLE NO. 119 ON REPLY CARD

Custom metalwork — good & quick!

Plus a wide range of rack-mounting cases etc. from stock.

Send for our new Product Catalogue.

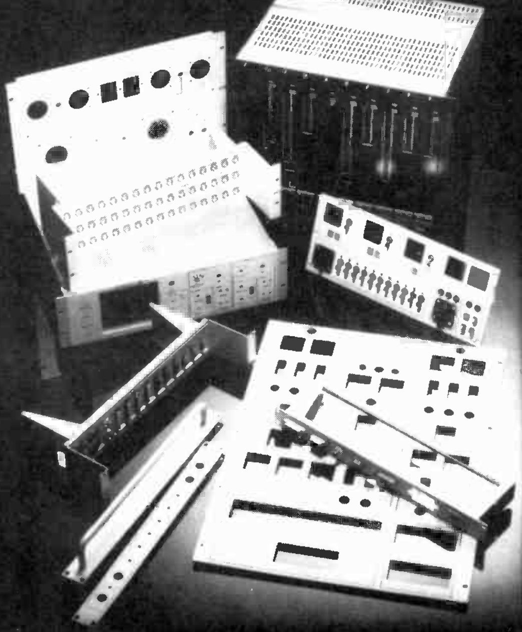

ipk

IPK Broadcast Systems
3 Darwin Close Reading Berks RG2 0TB
Tel: (0734) 311030 Fax: (0734) 313836

CIRCLE NO. 120 ON REPLY CARD

Layo 1

PCB CAD/CAM

The ideal solution for the creative Electronics Designer

- ☆ Schematic input
- ★ Netlist input
- ☆ Autorouter
- ★ DRC
- ☆ All common outputs

FROM **£99**

PENTAGRAM ELECTRONIC DESIGNS

Tel 0274 882609
Fax 0274 882295

Discount for Educational Establishments

CIRCLE NO. 121 ON REPLY CARD

PHOTO CD:

Digital imaging on the high street

Photo CD's linking of conventional 35mm photography with digital processing is set to burst open the mass market for electronic imaging. George Cole pictures the new Kodak technology – and sees what else is moving in the still video sector.

High quality imaging is the aim of Kodak's new system, and source images should be photographic and not electronic. Picture shows a thermal print produced from a CD. The 35mm negative was scanned and the image stored on a Photo CD

Kodak's. *Photo CD* system, now appearing in high street photo-processors around the UK, will for the first time bring digital imaging within the range of anyone with a PC. The mass attraction of *Photo CD* is that, unlike earlier systems, it takes conventional 35mm film and processes it to a digital image stored on disc

At the same time Canon, who entered the market with the *Ion*, recording images on electronic data storage, has introduced an enhanced version of its original still video camera.

Both developments will help supply the surging demand for electronic imaging systems. As personal computers turn into multimedia devices – handling video and photographic images as well as text and graphics – and desktop publishing evolves into desktop colour imaging, this is a sector that is guaranteed to grow.

Major R&D programme

During the 1980s video cameras rapidly replaced the home cine camera: would the same thing happen to film? The American film giant Kodak responded to the threat by entering the video market with badged camcorders and video tape, and starting a major R&D programme in electronic imaging systems.

Kodak researchers found that while electronic systems offered a number of advantages over film (such as instant viewing, re-usable software and easy image manipulation), video systems could not match 35mm film picture quality.

The result was the development (with Philips) of a hybrid format known as *Photo CD*, which allows users to store up to 100 photographic images on a compact disc and watch them on a television screen. Photo CD can provide high quality images sixteen times better than current TV systems and four times better than any proposed HDTV system.

Photo CD is being launched this summer and users will be able to go along to selected high street photofinishers and ask for a set of prints, negatives and a *Photo CD* disc for around £18.

Kodak is optimistic about the new system's prospects, because, it says, that unlike still video, *Photo CD* offers high quality pictures and hard copy prints. There is also no need to buy an expensive new camera as the system is compatible with the 360 million 35mm cameras worldwide. Unlike Canon's video floppy system, *Photo CD* discs are not tied to local TV standards and the discs will play on *Photo CD* machines, compact disc interactive (CD-I) decks and CD-rom-XA (extended architecture) drives.

How Photo CD works

The idea is that consumers take their film along to a photofinisher and ask for the *Photo CD* service. Film is developed and processed in the normal way to negative, then *Photo CD* discs are produced on a £74,000 photo image workstation (PIW) built up of a film scanner, data manager, disc writer, CD-rom-XA drive and printer.

To produce the disc, the operator first analyses the colour and checks film orientation. Each disc is given a unique bar code number and then the scanner scans the slides or nega-

RALFE · ELECTRONICS

36 EASTCOTE LANE, S. HARROW, MIDDLESEX HA2 8DB
TEL: 081-422 3593. FAX: 081-423 4009

EST
35
YEARS

SPECTRUM ANALYSERS

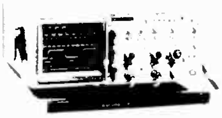

ADVANTEST R4131B portable 10kHz–3.5GHz analyser	£4000
B&K 2031 narrow band audio analyser	£2000
HP141T/8552B/8554B 1250MHz system	£1750
HP3562A systems analyser 64µHz–100kHz	£7500
HP35660A dynamic analyser 244µHz–102kHz	£3500
HP3580A 5Hz–50kHz opt 01. Digital readout model	£2000
As above but without option, mechanical readout	£1500
HP3582A dual-channel 25kHz analyser	£4000
HP3569B 22GHz spectrum analyser	£7000
MARCONI TF2370 110MHz analyser	£2000
ANRITSU MS62B 10kHz–1700MHz	£2000
ANRITSU MS68B 10kHz–4.4GHz	£4000
MARCONI 2380/2382 400MHz system	£5000

MARCONI INSTRUMENTS

2019 synthesized signal generator 10kHz–1040MHz	£2000
2091C/2092C white noise receiver/transmitter, pair	£500
2356/2357 level oscillator/level meter	£500
2380/82 400MHz spectrum analyser	£5000
2388 1GHz active probe	£400
2347 100MHz timer/counter	£175
2501 RF power meter 0.3W DC–1GHz	£100
2503 RF power meter to 100W DC–1GHz	£200
2828A/2829 digital simulator/analyser	£1000
2830 multiplex tester	£1500
2833 digital in-line monitor	£250
2970 data communications tester	£500
2955 mobile radio test set **5 IN STOCK, REDUCED . . .**	£3250
2956 NMT cellular adaptor, latest issue software	£1250
6460 microwave power meter with head 6421	£300
6700B sweep oscillator 8–12 4 GHz	£750
CA2805A PCM regenerator test set	£750
TF1245A Q-Meter with 1246 and 47 oscillators	£400
TF2006 FM signal generator 10–1000MHz	£350
TF2015/2171 signal generator AM/FM 10–520MHz	£400
TF2162 audio frequency attenuator	£100
TF2304 automatic modulation meter	£350
TF2370 110MHz spectrum analyser	£2000
TF2908 blanking & sync mixer	£50
TF2910/4 non-linear distortion (video) analyser	£1000
TF2914A TV insertion signal analyser	£1250
TF2910 TV interval timer	£500

**URGENTLY REQUIRED —
'HIGH-END' test Equipment
by brand names. TOP prices paid
for HP, TEK, MARCONI etc.
PLEASE CALL.**

TEST EQUIPMENT

ADRET 7100B AM/FM signal generators 10kHz–1.3GHz	£2000
AIM 501 low distortion oscillator GP1B/RS232	£500
ANRITSU MW98A/MH925A optical TDR	£1500
AVO CB154/5 electrolytic & tant' cap' bridge	£450
BRUEL & KJAER 4230 sound level calibrator	£200
BRUEL & KJAER 2307 level recorder	£1000
DATRON 1071 digital voltmeter (R & IEEE options)	£1250
GOULD J3B audio oscillator	£200
HAMEG HM605 60MHz dual-trace oscilloscope	£295
HITACHI V1050F 100MHz dual-trace oscilloscope	£500
KIKUSUI COS5040TM 40MHz dual-trace oscilloscope	£150
LING DYNAMICS LA500 (500W vibrator amplifier)	£275
MAURY MICROWAVE 8650E TNC-calibration kit	£1750
MOTOROLA R-2010D mobile radio test set	£2950
PHILIPS PM9355 current probe	£350
PHILIPS PM5134 function generator 1mHz–20MHz	£750
PHILIPS PM5534 standard pattern generator NTSC	£2500
PHILIPS PM5545 colour encoder PAL	£500
PHILIPS PM5597 VHF modulators £250. PM5598 UHF	£500
PHILIPS PM5580 I.F. modulator	£1500
PHILIPS PM6652 1.5GHz timer/counter GPIB	£850
PHILIPS PM8202 recorder with 9874/01 temp' unit	£250
RACAL DANA 9008A automatic modulation meter	£400
RACAL 9082 signal generator 1 5–520MHz synthesized	£850
RACAL 9105 RF micro-wattmeter 0.02µW–200mW	£250
RACAL 9300 RMS voltmeter −80dB to +50	£325
RACAL Store 4 4-channel tape recorder	£1000
RACAL 9341 LCR databridge component tester	£350
ROHDE & SCHWARZ SMFP mobile radio test set	£1500
SCHLUMBERGER 1250 frequency response analyser	£3250
SCHLUMBERGER 4010A mobile radio test set	£1250
TEKTRONIX TM503/SG503/TG506/TM501/PG506 calibrator	£2250
TEKTRONIX J16 digital photometer	£275
TEKTRONIX 1485R full spec' TV waveform monitor	£1500
TEKTRONIX 1503/03/04 TDR cable tester	£1750
TEKTRONIX 1503C/03/04 TDR cable tester	£3500
TEKTRONIX 465 100MHz dual-trace o'scope	£400
TEKTRONIX 465B as above	£450
TEKTRONIX 475 200MHz dual-trace oscilloscope	£550
TEKTRONIX 7623A 100MHz storage main-frame	£750
TEKTRONIX 7613/7A18/7B10 storage scope system	£500
TEKTRONIX 7A13, 7B53A, 7A18, 7B85, 7B87, 7CT1N	£call
TEKTRONIX AFG5110 arbitrary function generator	£1750
THURLBY PL320T-GP 0–30V 2A twice psu. GPIB	£350
WAYNE KERR B905 automatic precision bridge	£1150

HEWLETT PACKARD

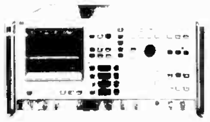

11602B transistor fixture for S-parameter test	£250
11710 frequency down-converter for 8640B	£500
1741A 100MHz storage (analogue) oscilloscope	£450
214B pulse generator high-power	£650
333A distortion meter	£400
3456A digital voltmeter	£850
3478A multi-meter	£550
35660A dynamic signal analyser 244µHz–102kHz	£3500
3580A audio spectrum analyser 15 Hz–50kHz LED version	£2000
3582A audio frequency spectrum analyser	£3500
3585A 40MHz spectrum analyser	£6000
400FL mV-Meter 100µV–300V fs. 20Hz–4MHz	£325
4276A/001 LCZ meter	£1750
436A/8481A RF power meter	£1000
5005B signature multi-meter, programmable	£750
5328A 100MHz counter with DVM and HPIB options	£350
5334A frequency counter 100MHz HPIB	£1000
5334B frequency counter 100MHz HPIB	£1000
6825A bipolar power supply/amp −20 to +20vdc 0–1A	£350
70300A tracking generator plug-in unit	£3000
70907A external mixer	£2750
7470A HPIB plotter	£295
8405A vector voltmeter, voltage & phase to 1000MHz	£1250
8406A comb generator	£1000
8505A network analyser system including 8503A S-parameter test set and 8501A storage normaliser	£5000
8554B/141T/8552B spectrum analyser system to 1250MHz	£1750
8558B/182C 1500MHz spectrum analyser system	£2000
8600A digital marker generator for 8601A	£325
8614A signal generator 800MHz–2.4GHz	£1250
8620C/86222A 10MHz–2.4GHz sweep generator	£2000
86290B 2–18GHz sweep generator plug-in	£2000
8640A signal generator 5–520MHz AM/FM	£750
8640B signal generator option 001/003	£1250
8656A AM/FM synthesized signal generator 0.1–990MHz	£1500
8683B 2 3–6.5GHz signal generator	£5000
8683D 2.3–13GHz signal generator	£6500
8684D 5.4–18GHz signal generator	£6500
8901A modulation analyser	£2500
8901B modulation analyser options 01/02/04	£4000
8903B audio analyser options 001/010/051	£2750
8954A transceiver interface	£500

PLEASE NOTE. ALL OUR EQUIPMENT IS NOW OPERATION-VERIFICATION TESTED BEFORE DESPATCH BY INDEPENDENT BS5750-REGISTERED LABORATORY. We would be pleased to handle Certificates of Calibration or NAMAS Certification by same laboratory at 'cost price'. All items covered by our 90-day parts and labour guarantee and 7-day 'Right to Refuse' warranty. **URGENTLY REQUIRED FOR STOCK 'HIGH-END' TEST EQUIPMENT.** Top prices paid

CIRCLE NO. 122 ON REPLY CARD

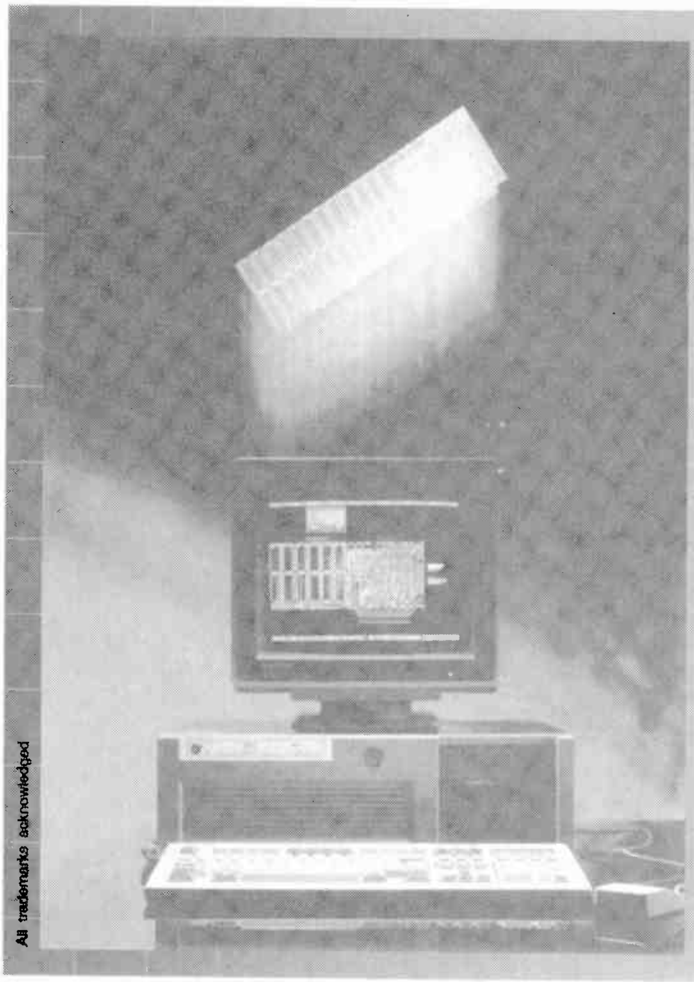

All trademarks acknowledged

BoardMaker

Finally... an upgradeable PCB CAD system to suit any budget

BoardMaker1 - Entry level

- PCB and schematic drafting
- Easy and intuitive to use
- Surface mount support
- 90°, 45° and curved track corners
- Ground plane fill
- Copper highlight and clearance checking

£95

BoardMaker2 - Advanced level

- All the features of BoardMaker1 plus
- Full netlist support - OrCad, Schema, Tango, CadStar
- Full Design Rule Checking - mechanical & electrical
- Top down modification from the schematic
- Component renumber with back annotation
- Report generator - Database ASCII, BOM
- NEW Thermal power plane support with full DRC

£295

BoardRouter - Gridless autorouter

- Simultaneous multi-layer routing
- SMD and analogue support
- Full interrupt, resume, pan and zoom while routing

£200

Output drivers - Included as standard

- Printers - 9 & 24 pin Dot matrix, HPLaserjet and PostScript
- Penplotters - HP, Roland, Houston & Graphtec
- Photoplotters - All Gerber 3X00 and 4X00
- NC Drill plus annotated drill drawings to HPGL, Gerber and DXF (BM2)

Call for info or FREE evaluation kit :
Tsien (UK) Limited
Phone : (0223) 277 777
Fax : (0223) 277 747

tsien

Tsien (UK) Ltd, Cambridge Research Labs, 181A Huntingdon Road, Cambridge CB3 0DJ

CIRCLE NO. 123 ON REPLY CARD

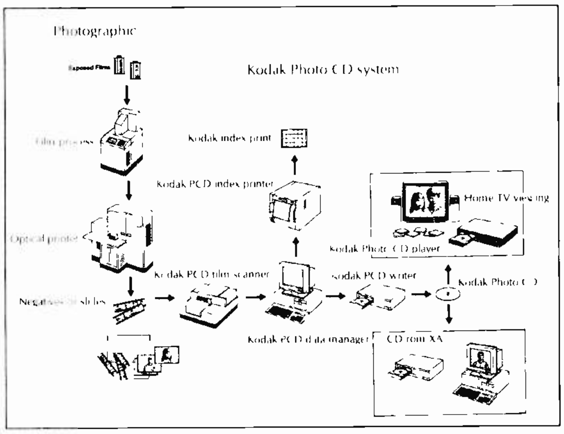

Photo CD allows 35mm film to be processed to disc – on the high street.

tives using 2048 lines with 3072 pixels each and twelve bits for each of the RGB components. The data manager – a Sun Sparcstation 2 – performs compression and colour correction, then the disc writer writes the disc at 2x normal speed, although research is working to increase this to 6x. The CD-rom- XA drive reads the disc information and is responsible for the generation of prints, enlargements and index prints which are displayed on the *Photo CD* jewel case.

PIW can process around 14 orders per hour, and consumers can obtain further prints or enlargements taken from their *Photo CD* disc.

In practice, greater compression ratios are possible, but Kodak is being careful about image quality and is stipulating that the source images for *Photo CD* should be photographic and not electronic.

Photo CD encoding

Kodak's system relies on a compression system called *Photo YCC*, where each pixel is represented by an eight-bit luminance (Y) component and two eight-bit chrominance (C) components. *Photo YCC* is converted back to RGB for display purposes.

YCC encoding reduces data, but preserves picture quality by storing each image as a hierarchy of components – extending from relatively low resolution images with 128 lines by 192 pixels, through to high resolution images with 2048 by 3072 pixels. The low resolution images are used for index prints and PIP effects and are uncompressed. A base image is used for TV and computer displays and is also uncompressed. The higher resolution images are used for HDTV displays and hard copy enlargements.

Image hierarchy is arranged as an image pac, size varying from 3 to 6Mbyte, with average size being around 4.5Mbytes. A compact disc stores around 600Mbyte of data – explaining why *Photo CD* discs store around 100 images. The system uses the Iso 9660:1988 file format so that the discs can be read by computers with suitably-equipped CD-rom drives. *Photo CD* players read microcontroller readable sectors,recorded in each image pac.

One of the problems with encoding is that light and colour can vary from scene to scene and film to film. Image quality of a hard copy print is also quite different to a TV or computer monitor screen. The *Photo YCC* system assumes that the original scene conformed to the CIE (Commision Internationale de l'Eclairage) standard Illuminant D_{65} and the system is based on the CCIR 601-1 and 709 recommendations for digital and high definition TV systems. RGB components are converted into YCC in three stages: a non-linear transformation is applied to maintain compatibility with the most popular display devices; the non-linear values are converted into one Y and two C components; and YCC components are converted into 8-bit data for storage on disc.

Image structure

To improve access time and data storage capacity, *Photo CD* images are compressed, and a full resolution 2048 x 3072 x 24-bit colour images uses 18Mbyte of data. But the transfer rate of a CD player or drive is just 150Kbyte/s, so it would take two minutes to call up an image and a disc would only be able to store around 30 images.

Compression is achieved by removing the high resolution components from the standard base image, compressing them and storing the data as residual files. C data is sub-sampled twice in horizontal and vertical directions to reduce the image to around 9Mbyte, and further compression is carried out on the highest resolution components using Huffman encoding. Only 4base and 16base are compressed (**Table 1**). The High resolution images are produced by a process of interpolation and Huffman decoding. For example, to convert a 512-line by 768 pixel base image into 1024-line x 1536 4base image first involves 2x interpolation. Then, the Huffman-encoded high resolution components are decompressed and added to each corresponding pixel to produce the final display image. A high resolution 16base image is produced in a similar way to a 4Base image, although the process is also applied to the chroma channels. (see **Figs. 1 and 2**)

Image pacs

The image pac (**Fig. 3**) consists of a series of regions which store various types of data. The

Table 1. Photo CD image structure

Image component	Resolution lines x pixels
Base/16	128 x 192
Base/4	256 x 384
Base	512 x 768
4Base	1024 x 1536
16Base	2048 x 3072

Still video advance

The latest advance by Canon in the still-video sector is the launch of the £1760 *RC-560* SVC, offering field and frame recording, in-camera editing facilities, an input socket for signals from various video sources and an adaptor for 35mm film negatives and slides. The camera also includes a digital frame store for displaying a still picture on the TV screen – as opposed to most SVCs where still frame involves scanning an image continuously so increasing head and disc wear and reducing battery life.

The *RC-560* eliminates the problems by reading the image from memory. Its frame store is also used for shuffling the order of the images so that any gaps caused by erasing selected images can be filled in. The process involves A-to-D-to-A conversion as the image is fed into the memory and then re-positioned on the disc. Some image reduction results, although Canon claims that this is very slight.

In the US, the *RC-560* is described as a "digital camera", but Canon UK has (wisely) decided that this could confuse some buyers. Its logical next step is to move towards a full digital still video system, though Canon will wait until digital TVs are on the market. The company has also announced a £2500 *Ion-Mac* kit for Macintosh II computers, which includes a 32-bit digitiser card with a full frame resolution of 756 x 540 pixels. An optional recording board attaches to the *Ion-Mac* mother board without needing to occupy a further Nubus slot. Text and graphics to be recorded from the Macintosh on to a still video floppy disk for presentation purposes, and a fast indexing feature allows users to view up to 50 thumbnail images on a Mac screen. The *Ion-Mac* system also supports Apple's *QuickTime* system software extension for moving media, which enables the images to be turned into motion video clips.

The *RC-560* is promoted as a "multimedia" machine, but it does not use the optional audio recording facility specified in the SVC format. Canon says that current sound recording is limited to around 10s per image and is a rather hit and miss affair, but that later SVCs will offer this facility.

In professional publications, designers could use still video images for page layouts, but the finished product would require much higher picture quality.

Canon's new RC-560 SVC pictured alongside its existing RC-260.

The Complete Programmable Function Generator

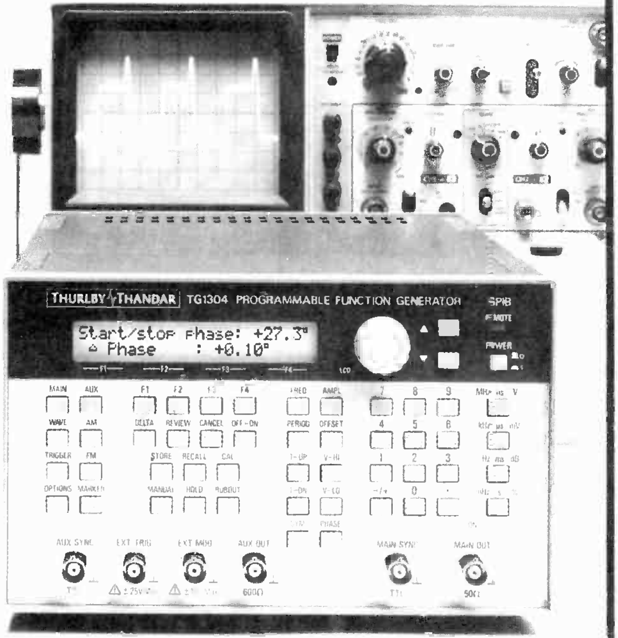

£1,295!

THURLBY THANDAR

The new TG1304 from Thurlby-Thandar is a high performance 13MHz function generator with full programmability including GPIB as standard.

The TG1304 has a full dual generator architecture. An auxiliary 5mHz to 50kHz generator provides programmable AM, FM and Sweep facilities or can be used independently. A further gating generator provides for programmable burst or gated waveforms independently of AM/FM modulations.

Non-volatile storage of up to 50 front panel settings is possible. All functions are remotely controllable from a GPIB interface conforming to IEEE.488.2.

For full technical details which demonstrate how the TG1304 has no competition at the price; contact:

Thurlby-Thandar Ltd.
Glebe Rd., Huntingdon, Cambs. PE18 7DX
Tel: (0480) 412451 Fax: (0480) 450409

CIRCLE NO. 124 ON REPLY CARD

PICO ADC-10

8-bit Analog to Digital Convertor for IBM PCs & compatibles

- 10-25 kHz typical sampling speed
- 0-5 v input range

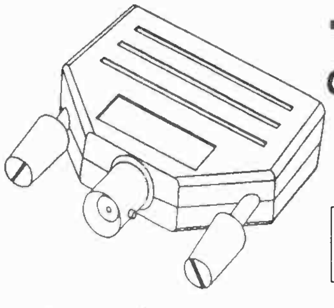

£49

+ VAT
(including p+p)

Access VISA

- Plugs directly into parallel printer port
- Requires no external power or expansion slots
- BNC input connector
- Supplied with software to use as a voltmeter & oscilloscope, plus Turbo C and Pascal drivers

Pico Technology Limited
Broadway House, 149-151 St. Neots Road,
Hardwick, Cambridge CB3 7QJ
Tel. 0954 211716 Fax. 0954 211880

CIRCLE NO. 125 ON REPLY CARD

WE HAVE THE WIDEST CHOICE OF USED OSCILLOSCOPES IN THE COUNTRY

TEKTRONIX 7000 range Plug-in Oscilloscopes

7603 with 7A26 & 7B53A Dual Trace 100MHz Delay Sweep with Cursors	£450
7403N with 7A18 & 7B50 Dual Trace 60MHz	£300
7504 with 7A12 & 7B52 Dual Trace 90MHz Delay Sweep	£250
7503 with 7A12 & 7B50 Dual Trace 90MHz	£200
7633 with 7A26 & 7B53A Dual Trace 100MHz Delay Sweep Storage	£500
7313 with 7A18 & 7B53 Dual Trace 25MHz Delay Sweep Storage	£300
7A13 Differential Comparator Amplifier DC–105MHz	£125
Other Plug-in options are available ie 4-Trace etc	
TEKTRONIX 2445B Four-Channel 150MHz Delay Sweep with Cursors	£1750
TEKTRONIX 2445A Four-Channel 150MHz Delay Sweep with Cursors	£1300
IWATSU SS5711 Four-Channel 100MHz Delay Sweep	£700
TRIO CS2100 Four-Channel 100MHz Delay Sweep	£500
TEKTRONIX 2336 Dual Trace 100MHz Delay Sweep Ruggedised	£1000
HITACHI V1050F Dual-Trace 100MHz Dual TB with 4-Channel Mode	£550
SCHLUMBERGER 5218 Dual-Trace 200MHz Delay Sweep with Trig View	£500
TEKTRONIX 475 Dual Trace 200MHz Delay Sweep	£550
TEKTRONIX 465 Dual Trace 100MHz Delay Sweep	£450
PHILIPS 3267 Dual-Trace 100MHz Delay Sweep	£500
TEKTRONIX 2215A Dual-Trace 60MHz Delay Sweep	£500
TEKTRONIX 2213 Dual-Trace 60MHz	£350
TEKTRONIX 2225 Dual-Trace 50MHz Alternate TB Magnification	£500
PHILIPS PM3217 Dual-Trace 50MHz Delay Sweep	£400
GOULD OS3000A Dual-Trace 40MHz Delay Sweep	£250
GOULD OS1100 Dual-Trace 30MHz	£180
GOULD OS300 Dual-Trace 20MHz	£200
IWATSU CS5702 Dual-Trace 20MHz	£225
TELEQUIPMENT D66 Dual-Trace 25MHz	£150
TRIO CS1720 Programmable 20MHz Dual-Trace	£300
HITACHI V209 Dual Trace 20MHz Portable (AC DC Operation)	£400

THIS IS JUST A SAMPLE • MANY OTHERS AVAILABLE

ELECTRON MICROSCOPES

I.S.I. Super 111A – Scanning

MARCONI 2440 20GHz Microwave Counter	£1500
MARCONI 2610 True RMS Voltmeter	£800
FARNELL SSG1000 Sig Gen 10MHz–1GHz Synthesised	£1750
FARNELL Synthesized Oscillator DSG1 – 0 0001Hz–99.99kHz	£275
MARCONI TF2015 AM/FM 10 520MHz Sig Gen with TF2171	£400
MARCONI TF2015 without Synchroniser TF2171	£250
MARCONI TF2016 AM FM 10kHz 120MHz with TF2173	£350
MARCONI TF2016 without Synchroniser TF2173	£175
MARCONI SANDERS Sig Sources Various models Covering 400MHz–8 5GHz	from £300
RACAL Instrumentation Recorders Store 4D and Store 7D	from £500
KEITHLEY 224 Programmable Current Source	£1000
FERROGRAPH RTS2 Recorder Test Set	from £150

FARNELL SSG520 Synthesised Sig Gen 10–520MHz	£600
FARNELL TTS520 Transmitter Test Set Consisting of RF/AF Counter, RF Mod Meter RF Power Meter AF Voltmeter AF Distortion Meter, AF Synthesiser	£600
SOLD as a pair for **ONLY**	£1000

SPECTRUM ANALYSERS

TEKTRONIX 494AP 10kHz 325GHz	P.O.A.
ANRITSU MS68B 10kHz–4 4GHz	£4000
ANRITSU MS62B 10kHz–1700MHz	£2000
HP 141T with 8555A & IF Plug-in 10MHz–18GHz	£2500
HP 141T with 8554B & 8552B 500kHz–1250MHz	£1500
HP 140T with 8554L & 8552A 500kHz–1250MHz	£1200
HP 141T with 8556A & 8552B 20Hz–300kHz	£1250
TEKTRONIX 491 Option 01 10MHz to 2GHz	£1000

PHILLIPS PM2525 Multi Function DMM 4 5–5 5-digit with GPIB/IEEE-488	Only £300
THURLBY PL320T-GP Bench PSU 0–30V 2-Amp Twice with GPIB	£350
HAND-HELD MULTIMETERS – 3.5-digit DM105 – 14 Ranges DC–2Amp	Only £18
M2355 – 32 ranges AC DC 10 Amps Diode/Transistor Tester, Freq counter etc	Only £32 50

RACAL DANA Syn Sig Gen 9084 0.01–104MHz	£500
RACAL DANA RF Power Meter 9104	£800
RACAL DANA 9341 Databridge Automatic measurements of L.C.R & Q	£350
WAYNE KERR B424 RCL Meter LCD Display	£125
WAYNE KERR 4210 LCR Meter Accuracy 0 1%	£600
AVO AC DC Breakdown Leakage & Ionisation Tester RM215L/2	£600

MARCONI DIGITAL FREQUENCY METERS		
Type 2430A	10MHz 80MHz	£125
Type 2431A	10MHz 200MHz	£130
MARCONI UNIVERSAL COUNTER TIMERS		
Type 2437	DC 100MHz	£175
Type 2438	DC–520MHz	£225

THORN PSU 0–40V: 0–50Amps Metered	£300
FARNELL PSU H60 25 0–60V, 0–25Amps Metered	£400
FARNELL PSU L30E 0–30V, 0–5Amps Metered	£80
TELEQUIPMENT CT71 Curve Tracer	£250
MARCONI TF2700 Universal LCR Bridge Battery	from £125
MARCONI TF2337A Auto Distort Meter 400Hz 1kHz 0 01%	£175
RACAL 9915 Freq Counter 10Hz–520MHz (Crystal Oven)	£150
MANNESMAN TALLY Pixy 3 XY Plotter RS232	£100

AVO MULTIMETERS

MODEL 8 or 9 (what's available)	£40 each
Test Set No 1 8X, 9SX	from £45
8 Mk 5 with Carrying Case	£90
8 Mk 6 with Carrying Case	£120

All Meters Supplied with Batteries & Leads

NEW EQUIPMENT

HAMEG OSCILLOSCOPE HM1005 Triple Trace 100MHz Delay Timebase	£792
HAMEG OSCILLOSCOPE HM604 Dual Trace 60MHz Delay Sweep	£610
HAMEG OSCILLOSCOPE HM203 7 Dual Trace 20MHz Component Tester	£338
HAMEG OSCILLOSCOPE HM205 3 Dual Trace 20MHz Digital Storage	£610

All other models available all oscilloscopes supplied with 2 probes

BLACK STAR EQUIPMENT (P&P all units £5)

APOLLO 10 100MHz Counter Timer Ratio/Period Time interval etc	£222
APOLLO 100 100MHz (As above with more functions)	£325
METEOR 100 FREQUENCY COUNTER 100MHz	£109
METEOR 600 FREQUENCY COUNTER 600MHz	£135
METEOR 1000 FREQUENCY COUNTER 1GHz	£178
JUPITOR 500 FUNCTION GEN 0.1Hz–500kHz Sine Sq/Tri	£110
ORION COLOUR BAR GENERATOR Pal TV/Video	£229

All other Black Star Equipment available

OSCILLOSCOPE PROBES Switchable × 1 × 10 (P&P £3)	£11

Used Equipment – With 30 days guarantee. Manuals supplied if possible.
This is a VERY SMALL SAMPLE OF STOCK SAE or Telephone for lists. Please check availability before ordering CARRIAGE al. units £16. VAT to be added to Total of Goods and Carriage.

Access VISA

STEWART of READING
110 WYKEHAM ROAD READING BERKS RG6 1PL
Telephone: (0734) 268041 Fax (0734) 351696 Callers Welcome 9am–5 30pm Mon–Fri (until 8pm Thurs)

CIRCLE NO. 126 ON REPLY CARD

first data block is the image pac attribute holding historical information, such as where the disc was produced. Base images are arranged in increasing resolution. Between each base image is a microcontroller readable sector. An image pac extension is used for storing audio, text and graphic information, and will be used for pre-recorded *Photo CD* discs. It also enables users to record sound, text and graphic information with images.

For the base/16, base/4 and base image components, first, one sector stores attribute information on the image, such as its rotation (in 90° increments), highest resolution and a flag indicating the presence of an image pac extension. A separate sector stores the image data.

4base and 16base data are arranged differently because additional information is needed to reproduce the high quality images. In these cases the first sector is the attribute sector, with the same function as the attribute sector in the other image components. The next two sectors are line pointers in a player-readable format, designed for *Photo CD* and CD-I decks, and the following sector contains line pointers again, though this time in a computer-readable format. Another sector is taken up by an Huffman quantiser table which is used for decoding the high resolution residual files. Remaining sector(s) stores the data.

A copy of all the base/16 images is stored in an overview pac, acting as a central information store, which can be used to display all the disc images on screen while helping users locate specific images. The overview pac consists of two overview pac attributes, the first designed for a computer, consisting of a single sector; the second composed of four microcontroller readable sectors which are designed for player use. These are followed by a series of base/16 images.

SVC basics

In conventional photography, images are recorded on to silver halide film which must be processed and developed before the prints are revealed.

Still-video systems (eg Canon) record images on a magnetic floppy disk or sram card, and can be viewed instantly on a TV screen. What is more, the disks and memory cards are reusable.

Canon uses the video floppy system (VFS), an analogue format which records its images as follows.

A still video camera (SVC) uses a CCD images sensor, composed of around 400,000-700,000 pixels. The video signal is composed of a luminance signal and two colour difference signals (R-Y, B-Y) and the three signals are frequency modulated and multiplexed on to a single track. Luminance signal peak white is 7.5MHz and sync tip 6.0MHz, giving a carrier deviation of 1.5MHz.

The two colour difference signals have carriers with centre frequencies of 1.2 and 1.3MHz and deviations of 0.7 and 0.5MHz respectively. Standard VFS format has a horizontal resolution of around 350 lines. But a high band version improves picture quality by raising the frequency of the luminance carrier and widening the carrier deviation to 7.7-9.7MHz. This improves the signal-to-noise resolution by around 2dB and increases the luminance bandwith from 4.5 to 6.5MHz, giving a theoretical horizontal resolution of over 500 lines. VFS images can be stored as field or frame recording modes. Field recordings occupy just one track, allowing up to 50 images to be stored on a disk – but the penalty is a loss of vertical resolution. In the frame mode, two tracks are used for each recording, giving better picture quality, but reducing the number of stored images to 25. Some SVCs offer only field mode recording; others offer both.

In the late 1980s, companies such as Canon, Sony, Pentax and Olympus began marketing SVC systems for the business market. In 1989, Canon launched the first European consumer SVC, the *RC-251* or Ion (image on-line network), a high-band model with field-only recording. An improved version launched in 1991, the *RC-260*, also offered field mode recording.

But there has been a poor consumer response to the still video concept, even in Japan, where consumers are more receptive to new electronics products. The problem is that SVCs are not cheap (around £500), image quality is much poorer than film and it is difficult and expensive to obtain hard copy prints to carry around on a pocket or wallet.

In Japan, still video is now being pushed as a desktop imaging system, although Canon still believes that its VFS video floppy system has a future as a consumer format.

In April 1991, Canon launched the £995 *Ion* PC kit for IBM PC/AT and compatibles. The minimum system requirement is a machine with a 286 processor, 1Mbyte ram, EGA graphics and at least 10Mbyte of hard disk space. In practice, Canon recommends a 386 machine with VGA graphics and a 20Mbyte hard disk. Because VFS is an analogue system, its images have to be digitised before being stored in a computer. The kit includes a plug-in digitiser card for 24-bit colour or 8-bit monochrome images. Image resolution is 736 x 544 pixels. The images can be saved in a number of file formats, such as TIFF and *PC Paintbrush*, and various software can be used to compress and manipulate the images.

Photo CD file system

Photo CD uses a hierarchical directory system for computer use. The root directory (0) contains, in addition to other, subdirectories. PHOTO_CD which contains all the *Photo CD* data. Its subdirectories INFO.PCD has *Photo CD* information that can be used by a computer; IMAGES stores the image pacs and image information files and OVERVIEW.PCD holds the overview images. A CDI directory is used by CD-I players. One of the advantages of *Photo CD* is that users can take a partly-filled disc along to a photofinisher and have further images added, although existing recordings

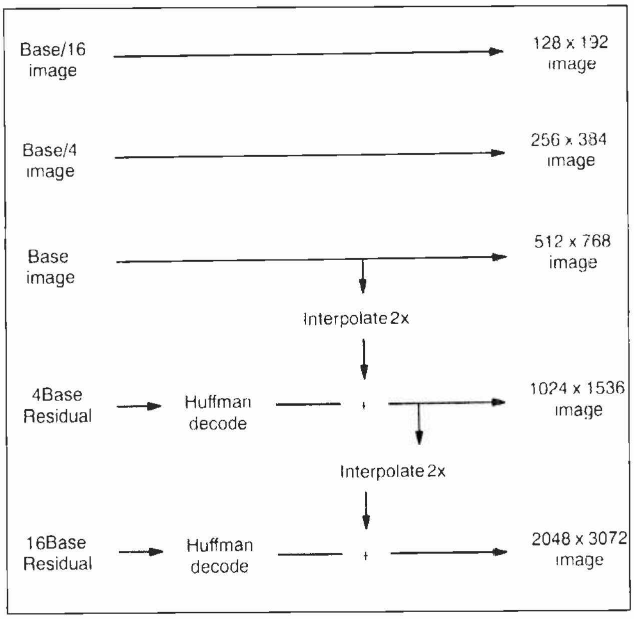

Fig. 1. Base image converted into a 16base image. Recomposition scheme for the luma channels.

Fig. 2. Recomposition scheme for the chroma channels.

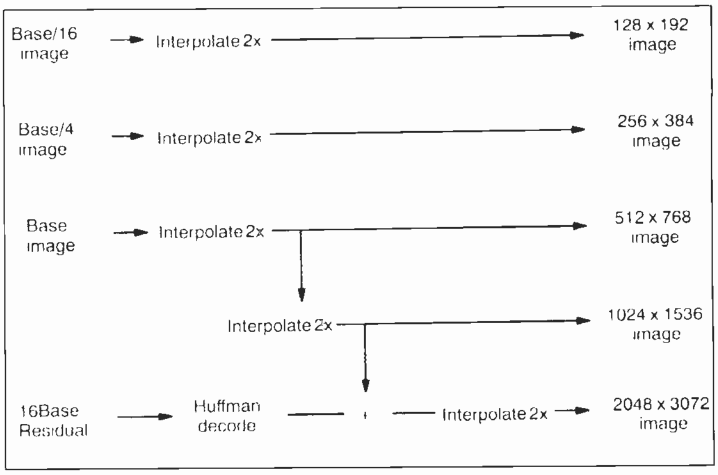

cannot be erased. In effect, *Photo CD* is a write-once system that allows more than one write per disc! This is possible because the system uses a hybrid disc as defined by the Philips/Sony Orange Book for recordable CD systems (**Fig. 4**).

Conventional CDs and CD-roms have a table of contents which the players reads when the disc is first inserted. The toc tells the player the number, time and location of each track, and is normally only written once so that any new tracks would not be listed and thus ignored by the player. A hybrid disc uses multiple program areas called sessions.

File structure of the first session conforms to CD-rom, while subsequent sessions conform to write-only CD.

When a new session is written, the *Photo CD* directory and information files are updated. Existing CD-rom drives can only read single session *Photo CD* discs, but Toshiba, Philips and Pioneer have recently announced that they will be marketing CD-rom drives which read multi-session *Photo CD* discs. These decks will use software which tells them to look for additional sessions. Photo CD uses the CD-rom XA sector structure (**Fig. 5**) so that the discs are compatible with CD-I players and other Mode 2 systems. The structure contains user data, along with synchronisation, header, sub-header and error detection and correction information.

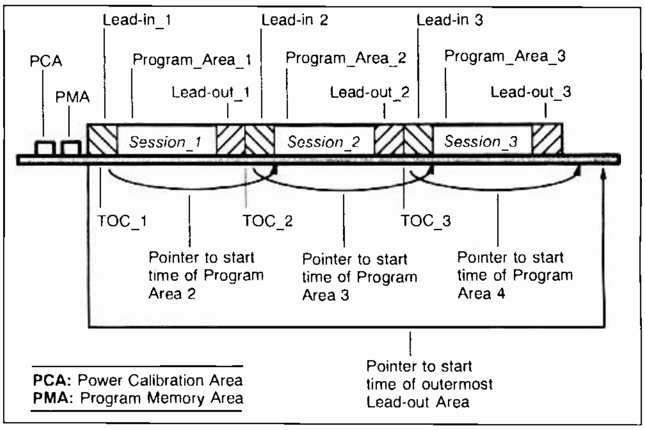

Fig. 4. Type B hybrid Photo CD disc, after fixation. Photo CD is a write-once system that allows more than one write per disc.

Photo CD and desktop colour imaging

Kodak is already promoting *Photo CD* in the consumer market, but the company also has its eye on the commercial sectors. This is because *Photo CD* will allow users to put high quality photographic images into a computer easily and cheaply. It is worth remembering that a high resolution scanner can cost ten times as much as a PC. Once stored, the images can be manipulated by an existing art or graphics package, such as Adobe *Photoshop*. Kodak says that *Photo CD* will be a boon for software developers and publishers, desktop publishers, magazines, picture libraries, museums, reproduction houses, medical libraries and multimedia production companies.

Kodak has produced several *Photo CD* packages , written in *C* and designed for the PC (dos/Windows 3.0) , Macintosh, Unix and OS/2 platforms. The *Photo CD* development toolkit allows programmers to transfer *Photo CD* images from a CD-rom-XA disc to a computer and select any *Photo CD* image at any resolution. Images can be viewed in full, or a portion can be displayed over the full screen area or in a window. The *Photo CD* accessory allows end-users to scan the contents of a disc, scroll, pan or zoom an image, copy part of an image on to a clipboard and then paste into another software application such as Microsoft *Word* or *Photoshop*, or save part of an image in a file format such TIFF or PICT. Images can also be printed out.

Kodak's Colour Management System includes tools for maintaining the colour level throughout the *Photo CD* production chain – important because there is no colour standard for computers or printers. *Photo CD* was recently demonstrated by Kodak at its UK headquarters in Hemel Hempstead and showed how manipulation software can be used digitally to clean up *Photo CD* images. For example, dust spots can be erased, damaged negatives repaired and items within an image can be removed or enlarged. In one demonstration, the colour of the sky was changed and rings were removed from the fingers of a woman. But these types of applications are for the commercial, rather than consumer market.

Kodak says that the minimum PC specification for a software developer is a machine with a 386 processor, 4Mbyte ram and 10Mbyte hard disk – though it recommends a 486 machine with 16Mbyte ram and 30Mbyte hard disk.

End users would need at least a 386SX with 2Mbyte ram and 3Mbyte hard disk, although a 486 machine with 16Mbyte ram and 25Mbyte HD is preferable. To process high resolution images, Macintosh users would need a Mac II with 32Mbyte ram and 25MByte hard disk.

Apple, IBM, Microsoft, Sun, NeXT, Hewlett Packard, Tandy and Olivetti all support the photo YCC standard, and Apple says that it plans to integrate Photo CD into its *QuickTime* system. So it seems likely that within a few years, Photo CD will become a natural part of desktop computing.

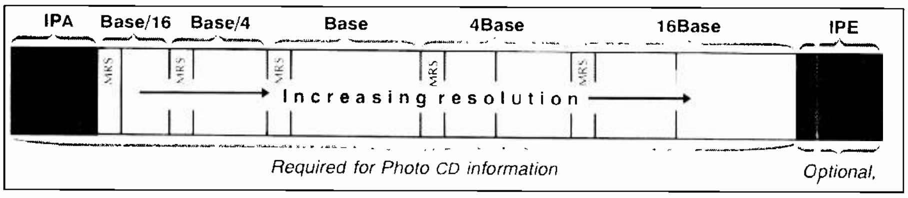

Fig. 3. Image pac structure consists of a series of regions which store various types of data.

Photo CD marketing

Photo CD is supported by the film companies Agfa and Fuji and the high street photofinishers Boots and Supasnaps. Kodak is launching three *Photo CD* players, priced between £300 and £400, which look like ordinary CD players, plug into a home TV and stereo system and are operated by a remote control handset. They will play Photo CD and audio CD discs and will give users instant and random access to all the disc images. Some decks will also offer zoom, crop and pan facilities.

An 8K eeprom will allow users to store details of their favourite images, so that when a disc is inserted into the *Photo CD* machine, those shots are displayed on-screen – Kodak calls this favourite picture select, or FPS.

Earlier this year, Philips announced that it is to launch pre-recorded *Photo CD* discs which can store up to 800 TV-quality images or 72 minutes of CD quality sound, or a combination of both. Pre-recorded discs may include arts, nature and sports titles.

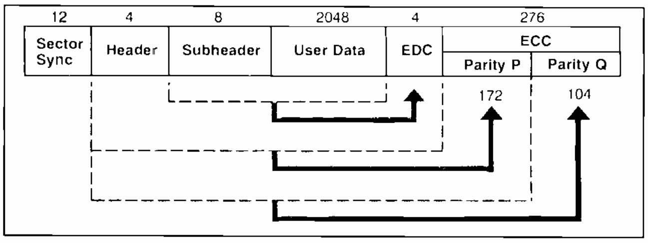

Fig. 5. Photo CD uses the CD-rom XA sector structure so that the discs are compatible with CD-I players and other Mode 2 systems.

Next year, consumers will be offered an enhanced *Photo CD* system which will also include audio, text and graphics recording. For example, a disc containing wedding shots, could also include the wedding march and captions. The new system will offer users a simple interactive system consisting of a series of branches. Kodak says that the audio may be selected from a sound library or users may bring along their own tapes or discs. ■

References

1. George Cole, *Still Video — still here?*. *EW + WW*, Oct 1990.
2. Kodak, Photo CD – A Planning Guide for Developers, May 1991.

Acknowledgement

Thanks to Jerry Cook, senior technical specialist for *Photo CD* at Kodak UK, for his help.

PCB DESIGN SOFTWARE
IN TODAYS ENVIRONMENT
PROTEL FOR WINDOWS

Protel For Windows provides advance capabilities within the user preferred graphically based Windows 3 envionment. The products modular approach allows selection of packages suited to your needs.

The Full Range of the world re-known *Protel* Software Available at unbeatable prices.

Protel for Windows PCB + Schematic layout running under Microsoft Windows 3.1, *Protel Autotrax* and Schematic DOS based plus Entry Level Easytrax 2 (freeware).

Contact us **NOW** on 061 320 7210 for your
EVALUATION PACK

J.A.V. ELECTRONICS LIMITED

Gallery House, 677 Manchester Road Denton,
Manchester M34 2NA.

Tel : 061 320 7210 Fax: 061 335 0119

ROLAND PLOTTERS
Flatbed and Drum A4 - A0

Full Range of Roland Plotters available at DISCOUNT Prices

Sample Prices

DXY1200 A3 Plotter	£647.50 + VAT
DPX 2600 A2 Plotter	£3160.00 + VAT
DPX 4600 A0 Plotter	£5960.00 + VAT
GRX 300AG Plotter	£2485.00 + VAT

Contact us **NOW** on 061 320 7210 for further information All prices quoted exclude Delivery and VAT. Ex Demos available.

J.A.V. ELECTRONICS LIMITED

Gallery House, 677 Manchester Road, Denton,
Manchester, M34 2NA

Tel: 061 320 7210 Fax: 061 335 0119

CIRCLE NO. 127 ON REPLY CARD

KESTREL ELECTRONIC COMPONENTS LTD

☆ **All items guaranteed to manufacturers' spec.**
☆ **Many other items available.**

'Exclusive of V.A.T. and post and package'

	1+	100+
EPROMS		
2764A-250	1.48	1.15
27C64-150	1.48	1.15
27C128-150	1.85	1.55
27128A-200	1.45	1.20
27256-250	1.45	1.28
27C256-200	1.75	1.35
27C512-150	2.50	1.85
27C010-150	2.90	2.35
Z80A CPU	1.10	0.75
6522	2.10	1.70
6551A	2.10	1.70

	1+	100+
STATIC RAMS		
62256LP-100	2.80	2.15
62256LP-70	3.30	2.45
6264LP-100	1.50	1.15
6116LP-100	0.75	0.65
628128LP-80	11.60	10.80
DRAM		
64k x 1	1.00	0.81
256k x 1	1.05	0.85
1M x 1	3.40	2.65
256k x 4	3.30	2.65

74LS, 74HC, 74HCT Series available
Phone for full price list

All memory prices are fluctuating daily, please phone to confirm prices

178 Brighton Road,
Purley, Surrey CR8 4HA
Tel: 081-668 7522. Fax: 081-668 4190.

CIRCLE NO. 128 ON REPLY CARD

FULL SPECTRUM MONITORING

The world is at your fingertips with ICOM's new IC-R9000 radio communications receiver with continuous all mode, super wideband range of 100KHz to 1999.8MHz and a unique CRT display that shows frequencies, modes, memory contents, operator-entered notes and function menus. The revolutionary IC-R9000 features IF Shift, IF Notch, a fully adjustable noise blanker and more. The Direct Digital Synthesiser assures the widest range, lowest noise and rapid scanning. 1000 multi-function memories store frequencies, modes, tuning steps and operator notes. Eight scanning modes include programmable limits, automatic frequency and time-mark storage of scanned signals, full, restricted or mode-selected memory scanning priority channel watch, voice-sense scanning and a selectable width around your tuned frequency.

ICOM

Post to: Icom (UK) Ltd. Dept WW
Sea Street Herne Bay Kent CT6 8LD
Tel:0227 741741 (24hr). Fax: 0227 360155

Name/address/postcode ....
....
Call sign:......................................Tel: ....Dept: WW

CIRCLE NO. 129 ON REPLY CARD

INSTRUMENTS TO BUY

Buy top quality instruments direct from **Electronics World + Wireless World** and avoid disappointment. If you are not satisfied, return the goods and we will refund the purchase price*.

*Goods must be returned within seven days of receipt; must be returned in their original packing; must not be tampered with in any way and must be returned in the condition in which they were received.

FREQUENCY COUNTERS

MX1010F and **MX1100F** are 8-digit frequency counters offering a broad range of features.

MX1010F: 1Hz to 100MHz, sensitivity of 15mV and resolution to 0.1Hz, data auto set, 10:1 attenuator, high impedance input – £129.00 plus VAT (£151.58).

MX1100F: 1Hz to 1GHz, features as MX1010F except ranges 70MHz to 1GHz and 50Ω impedance. £160.00 plus VAT (£188.00).

MX1010F MX1100F

MULTIMETERS

The **180 series** of high performance multimeters provide advanced features and are supplied complete with probes, battery and rubber holster. The case is dust and splash proof making it ideal in most environments. Designed to meet IEC348 Class II safety standard.

183: $3^1/_2$ digit large LCD display, ACV, DCV, ACA, DCA, resistance, continuity buzzer, diode test, hold, basic accuracy 0.5%. £33.50 plus VAT (£39.36).

185: $3^1/_2$ digit LCD, bar graph, ACV, DCV, ACA, DCA, resistance, continuity buzzer, diode test, hold, temperature (–40°C to 1370°C), capacitance (1pF to 40µF), frequency (1Hz to 200kHz), max min, edit, %, compare, basic accuracy 0.3%. £68.50 plus VAT (£80.49)

185: $3^1/_2$ digit LCD, bar graph, ACV, DCV, ACA, DCA, resistance, continuity buzzer, diode test, hold, temperature (–40°C to 1370°C), capacitance (1pF to 40µF), frequency (1Hz to 200kHz), max min, edit, %, compare, basic accuracy 0.3%. £68.50 plus VAT (£80.49)

187: As 185 except auto ranging. £75.00 plus VAT (£88.13).

285: As 185 except $4^1/_2$ digit true rms, basic accuracy 0.05%. £89.50 plus VAT (£105.16).

THE 180 SERIES

MULTIMETERS (2)

The **MX170B** and **MIC-6E** offer low cost measurement yet retain a large number of features. Supplied complete with probes.

MX170B: $3^1/_2$ digit LCD, compact size, ACV, DCV, DCA, resistance, diode test, low voltage battery test. £18.50 plus VAT (£21.74).

MIC-6E: $3^1/_2$ digit LCD, ACV, DCV, ACA, DCA, resistance, diode test, buzzer.
£33.50 plus VAT (£39.36).

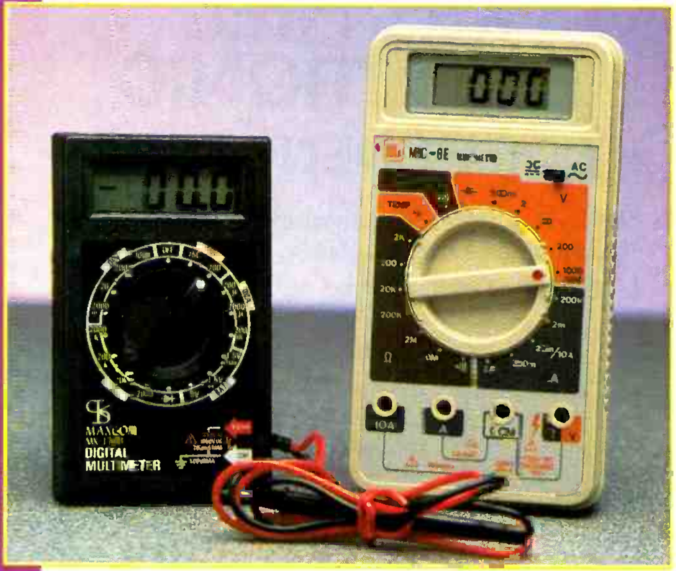

MX170B MIC-6E

20MHz 2-CH OSCILLOSCOPE

The CS4025 20MHz dual trace oscilloscope offers a comprehensive range of facilities including a high sensitivity vertical amplifier providing from 1mV to 5V/div in CH1, ALT, CHOP, ADD, CH2 modes with inverse polarity on CH2. The horizontal timebase offers a sweep range of 0.5s/div to 0.5µs/div plus x10 sweep expansion and X-Y mode. Triggering can be auto or normal from vert, CH1, CH2, line or external sources with coupling provided for AC, TV-F and TV-L. The CS4025 is supplied complete with matching probes for £295.00 plus VAT (£346.62).

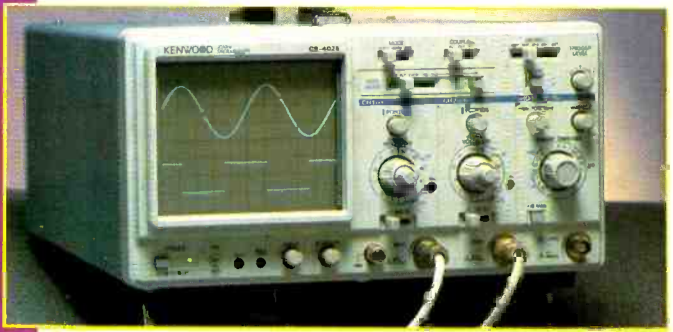

20MHz 2-CH OSCILLOSCOPE

PROGRAMMABLE POWER SUPPLIES

The PPS series of GPIB programmable DC power supplies offer high performance yet are extremely competitively priced using a 16 x 2 backlit LCD and 14 button keypad. All functions and conditions are easily selected and displayed. Overvoltage and overcurrent are selectable as is output enable/disable. Terminals for output and sense are provided on the front and rear to allow easy rack mounting.

PPS-1322: 0-32V 2A (GPIB) £375.00 plus VAT (£440.63)

PPS-2322: Dual 0-32V 2A (GPIB) £555.00 plus VAT (£652.13)

PROGRAMMABLE POWER SUPPLIES

MX2020

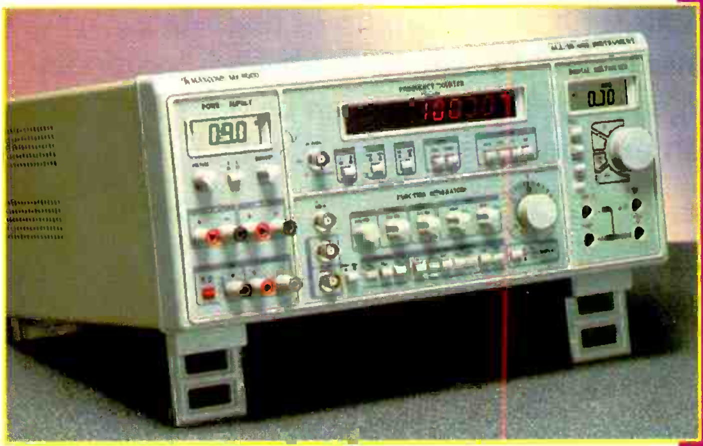

MX 9000

MIC-4070D

FUNCTION GENERATOR

The **MX2020** 0.02Hz – 2MHz sweep function generator with LED digital display offers a broad range of features. Output waveforms include sine, square, triangle, skewed sine, pulse and TTL. Lin and log sweeps are standard as is symmetry, DC offset and switchable output impedance from 50Ω to 600Ω. The digital display provides readout of the generators' frequency or can operate as separate 10MHz frequency counter. £175.00 plus VAT (£205.63).

LCR METER

The **MIC-4070D** LCD digital LCR meter provides capacitance, inductance, resistance and dissipation measurement. Capacitance ranges are from 0.1pF to 20,000μF plus dissipation. Inductance ranges from 0.1μH to 200H plus a digital readout of dissipation. Resistance ranges from 1mΩ to 20MΩ. Housed in a rugged ABS case with integral stand it is supplied complete with battery and probes at £85.00 plus VAT (£99.88)

FOUR INSTRUMENTS IN ONE

The **MX9000** combines four instruments to suit a broad range of applications in both education and industrial markets including development work stations where space is at a premium.

The instruments include:

1. A triple output power supply with LCD display offering 0-50V 0.5A, ±5V 1A, 5V 2A with full overcurrent protection;
2. An 8-digit LED display 1Hz - 100MHz frequency counter with gating rates of 0.1Hz, 1Hz, 10Hz and 100Hz providing resolution to 0.1Hz plus attenuation inputs and data hold;
3. A 0.02Hz to 2MHz full featured sweep/function generator producing sine, square, triangle, skewed sine, pulse and a TTL output and linear or logarithmic sweep. Outputs of 50Ω and 600Ω impedance are standard features;
4. An auto/manual $3^{1}/_{2}$ digit LCD multimeter reading DCV, DCA, ACV, ACA, resistance, and relative measurement with data hold functions.

The MX9000 represents exceptionally good value at only £360.00 plus VAT (£423.00).

FG SERIES FUNCTION GENERATORS

The **FG500 series** sweep/function generators provide two powerful instruments in one package, a 6MHz or 13MHz sweep/function generator and an intelligent 100MHz frequency counter. The microprocessor based instruments offer sophisticated facilities yet remain extremely competitively priced. A menu driven display allows easy set up and operation. A 16 character by 2-line LCD display provides clear and unambiguous readout of generator output and frequency measurement.

FG-506: 2Hz to 6MHz sweep/function with 100MHz counter £325.00 plus VAT (£381.88)

FG-513: 2Hz to 13MHz sweep/function with 100MHz counter £482.00 plus VAT (£566.35)

Please send me the following instruments..

....

....

I enclose a cheque/postal order/eurocheque to the value of £..................made payable to Reed Business Publishing Ltd or Please debit my Access/Visa/American Express/Diners Club with £......................Card Number..

Card expiry date.......................... Signature.................................Date..........................

Name...Address...

....

....................................Postcode.................................Phone.................................

Return to: Lorraine Spindler, Rm L333, Quadrant House, The Quadrant, Sutton, Surrey SM2 5AS. Please allow 21 days for delivery.

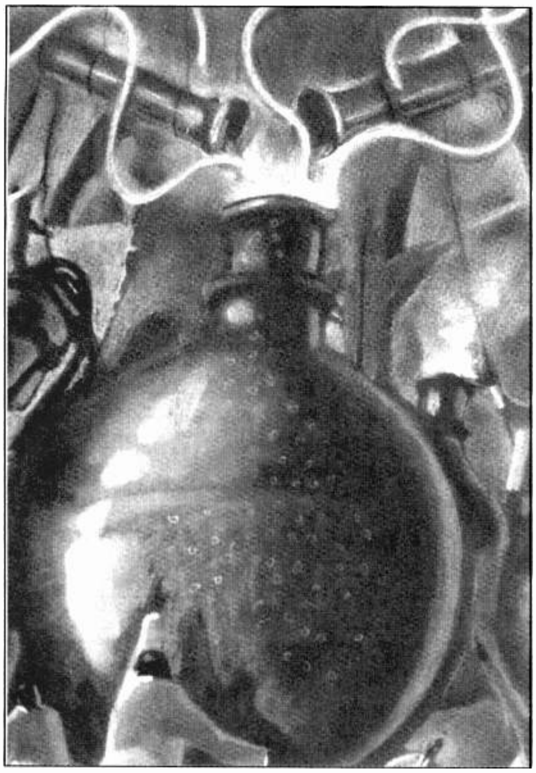

DIRECT DIGITAL SYNTHESIS

PART 2

On the face of it, direct digital synthesisers seem like an ideal solution to frequency generation. The technology can provide regular, small frequency increments with the minimum of discrete components directly from a single high frequency clock signal. Sideband noise can be a problem. Ian Hickman explains its cause and control.

Spurious outputs can be due to a variety of causes, principally amplitude truncation (only a finite number of voltage levels available out of the dac to represent a sinewave) exacerbated by dac non-linearity and glitches, and phase truncation (only a finite number of phase steps available to represent the sinewave). In many ways, spurious outputs due to phase truncation are the most troublesome, as will appear later.

But first, by way of a recap, a DDS (**Fig. 1**) produces an output sinewave at a given frequency by digital integration of a phase increment. The integration is not a continuous process as in an op-amp integrator, but stepwise, the phase increment being added into an accumulator repeatedly at each and every cycle of the clock frequency. The phase increment acts as the FSW – frequency setting word – since it determines how many clock cycles elapse per complete cycle of the wanted output frequency. If the digital representation of the phase were passed straight to a dac, the result would be a sawtooth waveform.

In a DDS, the continually increasing phase is converted to a digital representation of a sinewave via a look-up table in rom (or by other means) and this is in turn converted by the dac to a stepwise approximation to a sinewave. Finally, a lowpass or bandpass according to the application, smooths the output into a continuous sinewave. The phase accumulator (**Fig. 1**) accepts an N-bit binary FSW and delivers a binary word indicating the instantaneous phase to the table look-up function. The lowest possible output frequency and the frequency resolution (smallest frequency increment) are both equal to $F_{clock}/2^N$. The output frequency from the DDS is the N-bit binary number FSW times the DDS resolution, i.e:

$$F_{out} = FSW \text{ X } (F_{clock}/2^N).$$

As the output frequency is increased, the number of samples per sinusoid decreases. Since sampling theory states that at least two samples per cycle are required to reconstruct the output waveform, the maximum DDS fundamental output frequency is $F_{clock}/2$. In general, the maximum output frequency is somewhat less than this to permit filtering of the image response, **Fig. 2**. This shows a typical frequency spectrum output from a DDS after conversion to the analogue domain by the D-to-A converter, but before passing through the output filter. The example shows a DDS producing a fundamental output of 10MHz using a DDS clock of 30MHz. Image responses occur at (N x $F_{clock} \pm F_{out}$), where N = 0, 1, 2, ... etc, which must be filtered using a lowpass or bandpass filter at the output of the dac. Note that if F_{out} > ($F_{clock}/2$) the first image cannot be separated from the wanted

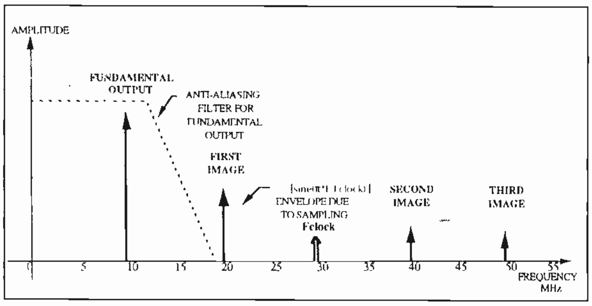

Fig. 2. Typical DDS output spectrum (10MHz output with 30MHz clock) illustrating the effect of sampling (the stepwise output waveform) and showing the response of a suitable anti-aliasing filter.

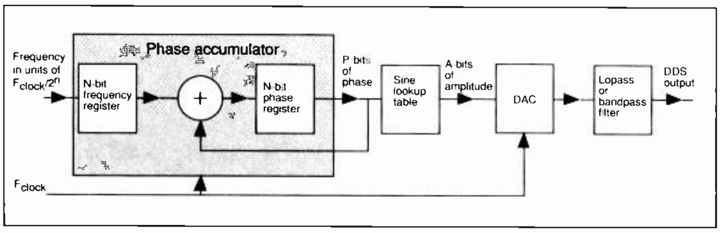

Fig. 1. Generic direct digital synthesiser showing the phase accumulator, sine look-up table (usually rom), D/A converter and output lowpass filter.

fundamental output by means of a lowpass filter, and is called an alias. Due to the sampled nature of the dac output the relative amplitudes of all the DDS outputs are described by a "(sine x)/x" envelope (with the exception of clock breakthrough). In Figure 2, the wanted output is at one third of the clock frequency: this is not one of the "good" frequencies described in last month's article, and accordingly the output at 20MHz is not a harmonic, but an image.

Where the final output frequency required is higher than $F_{clock}/2$, one of the image responses may be extracted from the dac output with a bandpass filter and used as the wanted output, thus avoiding the need for multiplier stages or up-conversion circuitry.

The problem in using an image response thus is that while the amplitude of the image responses decreases according to sine x/x, spurious responses due to dac non-linearities (the higher frequency components contained in dac glitches), roll off much more slowly with frequency. See **Fig. 3**. Tight dac linearity specifications and deglitching can help here; deglitching is described in Ref. 1.

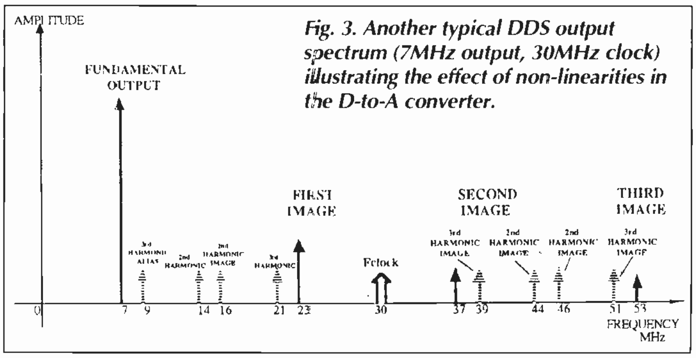

Fig. 3. Another typical DDS output spectrum (7MHz output, 30MHz clock) illustrating the effect of non-linearities in the D-to-A converter.

Even if the dac were perfectly linear and glitch free, there would still be spurious responses caused by its amplitude quantisation (truncation). There are two limiting cases: in the first there is no close-in LCM (lowest common multiple) between the DDS output frequency and the clock frequency; in the second the output frequency is a small integer submultiple of the clock frequency.

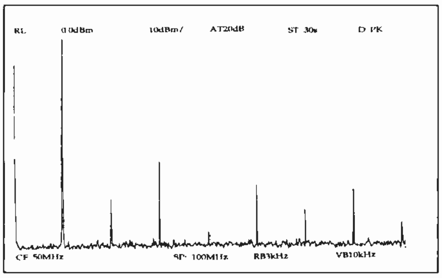

Fig. 4a. Output spectrum of a DDS clocked at 400MHz and set to produce an output at 12.5MHz ($F_{clock}/32$).

In the first case, the periods in the quantisation error process have a very long period. The quantisation error then results in what appears to be a white noise floor, but it is actually a "sea" of very finely spaced AM spurious sidebands. Although this noise floor is white, it is not Gaussian; it results from a uniform probability distribution. As it results from an AM process, it can be suppressed by using a hard limiter following the lowpass filter, at the expense of generating odd harmonics of the wanted output frequency.

In the second case there is no quantisation noise floor; the quantisation noise is concentrated in several discrete AM spurs due to the highly periodic nature of the error process. Again, the spurs can be suppressed by means of a hard limiter in those cases where a square wave output is acceptable, or where further filtering can be added to suppress the odd harmonics of the wanted output frequency generated by the limiter. These two cases are extremes, typical cases lie somewhere in between. The signal to noise ratio for the first case can be calculated by assuming that the quantisation errors are independently selected with a uniform probability distribution in the range ±0.5LSB. The result of the analysis (which can be found in Ref. 2) gives the signal to quantisation noise power as $(1.8 + 6D)$dB, where D is the number of bits of the D-to-A converter.

This may be expressed as a noise power density of $-(1.8 + 6D + 10\log W)$dBc/Hz where W is the Nyquist bandwidth of $F_{clock}/2$. On a spectrum analyser, this noise floor will look just like a phase noise floor, although of course the latter could not be suppressed by hard limiting.

By way of illustration, for a DDS clocked at 50MHz, the quantisation noise floor works out as follows:

D(No. of dac bits)	Quantisation noise floor
8	−124dBc/Hz
10	−136dBc/Hz
12	−148dBc/Hz

but don't expect to achieve these figures in practice. Remember that they are for a perfectly linear glitch-free dac. Note that at some frequencies, such as $F_{out} = F_{clock}/4$, there is no amplitude truncation error and hence the noise floor is the divided phase noise of the clock generator plus the noise floor of the digital circuitry. At least, this is the case when the phasing is as shown at either the right hand or left hand side of Figure 7 of last month's article, since these involve only two, or three equally spaced, levels respectively. For the intermediate forms shown, involving four levels, truncation errors will apply.

Similarly, as already noted, there is no quantisation AM noise floor in the second case quoted, but nonetheless measurements indicate that the total power in the discrete spurs is still approximately equal to $-(1.8 + 6D)$dBc. This is roughly true even when $F_{out} = F_{clock}/8$, where the quantisation noise power is concentrated into just one spur, the third harmonic of the output frequency.

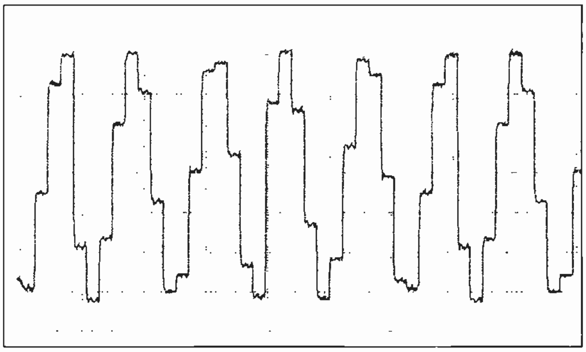

Fig. 4b. Output waveform of a DDS clocked at 400MHz and set to produce an output at 62.5MHz (5/32Fclock).

Figure 4a shows the output of a GEC/Plessey *SP2002* DDS (with no lowpass filter), clocked at 400MHz and programmed to provide an output of 1/32th of the clock frequency, ie 12.5MHz. As can be seen, the only outputs, apart from the wanted fundamental, are harmonics. All the even harmonics are more than 60dB down on the fundamental, and the largest odd harmonic – the third – is well over 40dB down.

If the device is programmed to provide an output of five times this frequency, $^5/_{32}$ times F_{clock} or 62.5MHz, then the rom locations visited are not the same on each and every cycle, see **Fig. 4b**. In fact, the waveform repeats exactly every five cycles; you might say it was really a 12.5MHz waveform whose fifth harmonic was stronger than the fundamental or any other harmonic. **Figure 4c** confirms this, indeed, the similarity between it and Figure 4a is striking: the only difference is that the frequency of the main output has moved from the first to the fifth harmonic.

In Figure 4b, a variation in time (phase) between zero crossings is clearly visible. This is shown even more dramatically in **Fig. 5**, where the DDS has been set to an even simpler ratio, just $^3/_{16}$ of the clock frequency, giving a 75MHz output, lower trace. The upper trace shows the MSB of the accumulator, or what you would get if you hard limited the lower trace: the arrows show how the traces should align, allowing for an incidental time offset between them due to triggering. The upper trace shows that the nearest a DDS can get to $^3/_{16}$ths of the clock frequency (400MHz in this case) is to put out two half cycles each three clock periods long followed by one half cycle two periods long, i.e. one cycle of 66.6MHz followed by half a cycle of 100MHz.

When the output of a generator is to be used as the local oscillator drive for a frequency converter, the wave shape is usually unim-

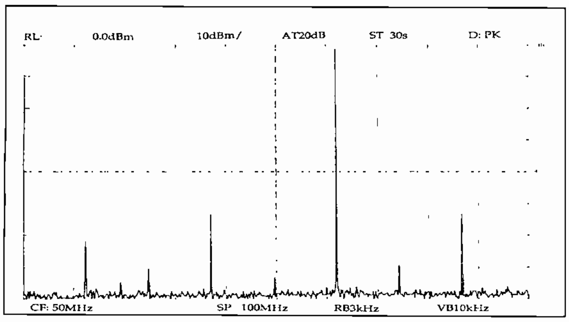

Fig. 4c. Output spectrum of a DDS clocked at 400MHz and set to produce an output at 62.5MHz ($^5/_{32}F_{clock}$), corresponding to the waveform of Fig. 4b.

portant: a squarewave will do as well as a sinewave. This means in the case of a DDS that the AM noise floor or discrete AM spurs mentioned earlier are of no consequence. As far as the local oscillator signal is concerned, a mixer normally works way into to saturation and any small variations of drive level have no effect.

However, with truncation effects present, this is no longer the case. Neither the upper or lower trace in Fig. 5 would be a suitable drive signal for a mixer assuming, as is usually the case, that we wish to minimise spurious responses in the mixer. But if the dac is followed by a high order lowpass filter with a steep cut-off – Chebychev or elliptic for example – the high Q tuned circuits in the filter which are responsible for its atrocious group delay will exert a flywheel effect, helping to evenly space out the zero crossings as well as suppressing harmonics. This won't work at DDS output frequencies way below the filter's cut-off frequency but at such lower frequencies, there will be many clock cycles per half cycle of the output and hence the zero crossings will be much more evenly spaced in the first place.

Spurs caused by phase truncation introduce jitter into the output waveform. This artefact may be regarded as time (and hence phase) displacement of the zero crossings of the fundamental component of the wanted output frequency. The resultant phase modulation appears as PM sidebands or spurs. Where the phase increment sent to the rom is the same on each and every cycle of the output so that the sinewave samples are equally spaced, there is no phase truncation and consequently no PM spurs. As the rom address range is a power of two, this includes the frequencies ($F_{clock}/2$), $F_{clock}/4$, $F_{clock}/8$, $F_{clock}/16$ etc, i.e. precisely the "good" frequencies that were mentioned in last month's article. At many other frequencies, PM spurs occur and are a real problem in DDS applications.

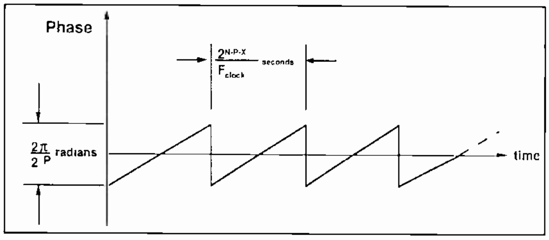

Fig. 6. Phase truncation causes phase modulation with a periodic sawtooth waveform. The figure shows the phase of the output relative to the phase of an ideal sinewave of the same frequency. Most of the time, the DDS is putting out a frequency that is slightly too high so its phase advances relative to the ideal. Every so often, on a particular clock pulse the accumulator output does not advance, so the rom causes the dac to deliver the same voltage as on the previous clock cycle. Thus the phase drops back by $2\pi/2^P$ radians before continuing to creep forward as before.

They are at their most difficult to deal with when they occur at a very small offset from the wanted frequency, since it is then virtually impossible to filter them out from the wanted output. To see how close-in PM spurs arise, imagine the rudimentary DDS of last month's Figures 4 and 5 with the FSW set to 001000; then the output will be as in last month's Figure 6a. Each of the eight rom locations is visited successively, giving an 8Hz output for a 64Hz clock. Now imagine the FSW incremented to 001001 (corresponding to 9Hz) when the accumulator content is all zeros. For seven clock cycles the DDS will produce an output waveform as in Figure 6, but on the eighth clock cycle, an internal carry in the adder will cause the phase to advance by 90° instead of 45°. Eight cycles later the same will happen again, until after 64 clock cycles, there have been not eight cycles of output but nine, each of them containing a phase hiccup as the gradual falling behind of phase of the output relative to a real analogue 9Hz sinewave is made up by a forward phase jump of an extra 45°.

Clearly this mechanism is absent if the $N - P$ least significant bits of the FSW are all zero. It would always be absent if P were equal to N, i.e. if we could carry all of the accumulator bits to the rom, but for typical values of N, this is impractical.

In a typical DDS with say a 30-bit frequency setting word, the frequency resolution is finer than one thousand millionth of the clock frequency, giving rise to the possibility of PM spurs removed from the wanted output by a tiny amount. However, the smallest phase increment is determined by P, the number of bits sent from the accumulator to the rom, not by N, the number of bits in the FSW. The process is illustrated in **Fig. 6**, where $F_{out} = (M \text{ X } F_{clock})/2^N$, and $M = (2^x)y$, with $x = 0, 1, 2,...$ and $y = 1, 2, 3,...$. Here, y is an integer and x is the largest power of 2 that factors into M, x may of course be zero. Then the period of the sawtooth phase modulation giving rise to the phase truncation spur is as given in Figure 6. Again, a formal treatment will be found in Ref. 2, from which it is found that the worst case phase truncation spur exhibits a power level of $-6P$ dBc.

It is clear that binary submultiples of the clock frequency, $F_{clock}/4$, $F_{clock}/8$, $F_{clock}/16$, $F_{clock}/32$ etc, are all good frequencies because no drift of the output phase relative to an ideal sinewave of the same frequency occurs. However, there are many other frequencies that are free of phase modulation due to phase truncation. For if P, the number of bits passed from the accumulator to the sine look-up rom is (say) 10, then $F_{clock}/1024$ is one of these good frequencies as is $F_{clock}/512$, and $F_{clock}/256$, all three frequencies falling in the binary submultiple series mentioned above. At these frequencies, the phase passed to the rom advances on each clock cycle by $2\pi/2^P$, by twice this amount and by four times this amount respectively. But likewise, the phase increment is constant on every clock cycle when it advances by three, five or any other constant whole number multiple of $2\pi/2^P$. So potentially there are 2^P frequencies free of phase modulation spurs, less if you discount those above the Nyquist rate.

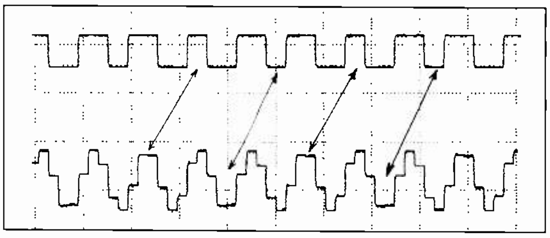

Fig. 5. Output waveform of a DDS clocked at 400MHz and set to produce an output at 75MHz ($^3/_{16}$ of F_{clock}) lower trace, and the output of the MSB of the accumulator upper trace. The two traces are displaced timewise due to triggering levels; the arrows indicate the actual alignment, from which it can be seen that the upper trace mirrors the zero crossings of the lower.

References

1. Design brief: voltage references. Ian Hickman EW+WW Oct 1991 p845

2. Application Note AN2334-4 Hybrid PLL/DDS Frequency Synthesizers Qualcomm Incorporated.

3. Direct Digital Synthesis – Aspects of Operation and Application D May IEE Colloquium on Direct Digital Frequency Synthesis University of Bradford Nov. 1991 IEE Digest No. 1991/172

Next month: more ways of reducing the levels of spurious outputs of a DDS; using the modulation facilities of DDS systems for AM, FM, PM; hybrid PLL/DDS synthesisers, and other considerations.

M & B RADIO (LEEDS)

THE NORTH'S LEADING USED TEST/EQUIPMENT DEALER

GENERAL TEST EQUIPMENT

Amber 4400A Multipurpose Audio Test Set	£750
Datalab DL1080 Programmable Transient Recorder	£750
Genrad 1658 RLC Digibridge	£750
HP 754A AC Calibrator	£750
HP 3455A Hi-stability voltmeter GPIB	£1450
HP 3478A LCD Digital multimeter	£400
HP 3468B Digital multimeter 5½-digit	£400
HP 5306 GPIB Multimeter/counter	£225
HP 3400A True RMS voltmeter	£145
HP 3403C True RMS voltmeter 2Hz–100MHz	£150
HP 400E Audio voltmeters	£145
HP 8750A Storage normalizer	£450
HP 5382A 225MHz Frequency counter	£195
HP 10529A Logic comparator	£125
HP 394A Variable attenuator 1GHz–2GHz	£195
HP 461A Amplifier 1kHz–150MHz	£100
HP 6294A PSU 0–60 Volts 1 Amp	£100
HP 3556A Posphometer	£75
HP 333A Distortion analyser	£225
HP 4271B 1MHz Digital LCR meter	£950
Tektronix 576 Curve tracer + 172 Programmer	£1400
Tektronix 521A PAL Vectorscope	£1000
Tektronix 1481R Video waveform monitor	£500
Tektronix DC508 1GHz Frequency counter	£500
Tektronix 141A PAL Test signal generator	£850
Racal/Dana 5002 Wideband level meter	£850
Racal/Dana 9303 True RMS RF level meter	£850
Racal 9904M Counter timer	£125
Racal/Dana 9009 Modulation meter 10MHz–1.5GHz	£275
Iwatsu SC7104 1GHz Frequency counter (NEW)	£395
Racal/Dana 9100 Absorption wattmeter 1GHz 1mW–3Watt	£75
RFL 5950A Crystal impedance meter	£150
Telonic TSM Rho meter	£500
EMT Audio threshold monitor	£250
Systron Donner PSU Dual 0–40V 1Amp	£100
Sayrosa 252 Automatic mod meter 1MHz–2GHz	£225
Gravitron HD05/5S Digital scales	£300
Hughes Travelling wave tube amplifier	£295
Wayne Kerr LCR Meter battery-powered	£150
Woekle ME102 Wow and flutter meter	£100
Woekle ME106C Wow and flutter meter	£150
Fluke 6160A Frequency synthesizer 1kHz–30MHz	£125
Marconi TF2950 RF Communication test set	£400
Marconi TF2914A TV Insertion signal analyser	£750
Marconi TF2913 Test line generator + insertor	£750
Marconi TF2162 Audio frequency attenuator	£75

SIGNAL GENERATORS

Farnell SSG1000 10Hz–1GHz Synthesized (as new)	£1650
Farnell SSG2000 10Hz–2GHz Synthesized (as new)	£2500
Farnell TTS1000 Transmitter test set	£800
Farnell SSG520 AM/FM signal generator	£600
Farnell TTS520 transmitter test set	£650
Farnell SSG520/TTS520 Together	£1000
Marconi TF2952 Radiotelephone test set AM/FM	£1500
Marconi TF2008 AM/FM 10kHz–510MHz RF probe kit + manual	£350
Marconi TF2015/2171 Sync' 10MHz–520MHz AM/FM	£375
Marconi TF2015 AM/FM signal generator	£200
Marconi TF2016 AM/FM 10Hz–120MHz generator	£150
Marconi TF2016A with Rev' power trip + manual	£200
Marconi TF2002 AM/FM 100kHz–88MHz generator	£100
Marconi TF2000/2162 AF generator	£125
RS SHF 4.8–18GHz Sgnal generator	£850
Philips PM5224 110MHz AM/FM generator	£195
Philips PM4556 Stereo generator	£150

SPECTRUM ANALYSERS

HP 8406A Comb generator	£500
Marconi TF2371/1 110MHz Spectrum analyser	£1650
HP 8555A 10MHz–18GHz Plug-in (NEW)	£3000
HP 182T/8558B 0.1–1500MHz (as new)	£2000
HP 141T/8553B IF unit 8554B/8553B 1250/110MHz	£2950
HP 3580A 5Hz–50kHz Spectrum analyser (NEW)	£2500

OSCILLOSCOPES

Tektronix 2465 250MHz four-trace scope	£1650
Tektronix 2445A 150MHz four-trace	£1500
Tektronix 5223 digitizing scope	£950
Tektronix 465B 100MHz scope + DVM	£500
Tektronix T922R rack mount scope	£225
Tektronix 935A 15MHz dual-channel	£175
Nicolet 4094A digital oscilloscope	£1000
HP 1727A 275MHz storage oscilloscope	£450
HP 1703A storage oscilloscope	£195
Philips 3217 50MHz oscilloscope (as new)	£375
Philips 3244 50MHz four-trace oscilloscope	£275
Philips 3234 10MHz storage oscilloscope	£225
Philips 3232 10MHz true dual-beam oscilloscope	£200
Hitachi V650F 60MHz oscilloscope	£275
Gould OS4000 10MHz digital storage oscilloscope	£235
Gould OS300 20MHz dual-channel oscilloscope	£195
Gould OS250 15MHz dual-channel oscilloscope	£175
Farnell DTS12 12MHz digital storage oscilloscope	£300
Telequipment D83 50MHz dual-channel oscilloscope	£200
Telequipment DM63 four-trace storage oscilloscope	£195

SPECIAL OFFERS

AVO 8 TESTSET No.1 meters probes + case inc.	£25
Farnell C2 PSU 0 to 30V 2amp	£90
Tektronix DM501 DVM + TM501 frame	£150
HP 3400A true RMS voltmeters	£145
HP 3403C true RMS voltmeter digital 10Hz to 100MHz	£150
Clare V158 electrical safety testers	£100
Marconi TF2015/2171 10MHz–520MHz signal generators	£375
Radiometer SMG1 stereo generators	£100

RADIO EQUIPMENT

Racal RA1792 HF Receivers	£2000
Racal MA1723 HF Drive units	£1500
Philips 88MHz–108MHz 10kW Broadcast TX	£4500

ALL PRICES PLUS VAT AND CARRIAGE

86 Bishopsgate Street, Leeds LS1 4BB
Tel: 0532 435649 Fax: (0532) 426881

CIRCLE NO. 130 ON REPLY CARD

---

sherwood ■ single board computers ■ sherwood ■ single board computers ■ sherwood ■ single board computer

SHERWOOD
Data Systems

. . . the single board computer people

Our rugged industrial PC compatible Eurocards now include:

286 and 386sx cpu cards, SVGA/VGA display cards, multi I/O cards, PC-AT card adaptors, case frames, industrial I/O cards, backplanes etc.

FOR INDUSTRIAL CONTROLLERS CONTACT US TODAY!

Sherwood Data Systems Ltd., Tel: 0494 464264

sherwood ■ single board computers ■ sherwood ■ single board computers ■ sherwood ■ single board computer

CIRCLE NO. 131 ON REPLY CARD

AOR (UK) Ltd. Adam Bede High Tech Centre,
Derby Road, Wirksworth, Derbys. DE4 4BG.
Tel: 0629 - 825926 Fax: 0629 - 825927

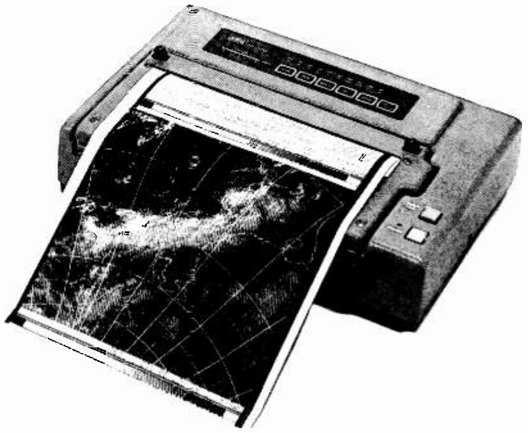

Radio Facsimile Terminal WX-2000

The WX-2000 is a stand alone radio facsimile terminal designed to produce hard copy images from various facsimile services including Weather charts, Maps, News media and even Satellite pictures from NOAA, GOES and METEOR etc. The WX-2000 simply requires an audio signal from a shortwave or satellite receiver capable of receiving facsimile signals.

The built-in high resolution (8 dots per mm) thermal line printer produces crisp images with high resolution. The WX-2000 is also capable of simulating grey scale which is ideal for Automatic Picture Transmission by weather satellites.

In addition to the basic functions, the WX-2000 provides full operational controls such as Auto Start, Sync, Adjustment, Position Alignment, Tuning LED etc to produce the highest quality images. The power requirement is 12 - 13.5V DC @ 3A, this makes the WX-2000 ideal for both on land and off shore applications.

Printing method: Thermal line printer 8 dots per mm
Printing scale: 2 (B/W) or 16, selectable
Paper width: A4 (210mm) x 30m
Audio Input: FM 1900+/-400Hz 0.7V/600 OHM
AM 2400Hz 0-1V/600 OHM
Auto start: APSS type
Synchronisation: Independent type
Reception speed: 60, 90, 120 & 240 rpm, selectable
Collaboration factor: 576 or 288
Power requirements: 12 - 13.5V DC @ 3A
Size: 310mm (W) x 70mm (H) x 200mm (D)

Full details available upon request

CIRCLE NO. 132 ON REPLY CARD

PRODUCTION/A.T.E.
SECOND USER EQUIPMENT
HUGE SAVINGS ON NEW PRICES

PCB ASSEMBLY

SYSTEM 1000 Hot Air Rework Station	£495
DYNAPERT MPS 118 Pick + Place c/w Feeders	£5,950
DYNAPERT MPS 500 Pick + Place c/w Feeders	£9,450
AMBOTECH Robin Axial/DIP Inserter Refurbished and Upgraded	£12,000
BLAKELL LS210 Assembly Station	£375
MPM ASP-24 Screen Printer Make offer	£call
OMNITAC Socket Inserter	£375
Pin Inserter	£375
ROYONIC 410 2 Assembly Workstations with programmer	£4,950
TRESCOMP PA-60 Paternoster	£375
UNIVERSAL AUTO-INSERTION PACKAGE 80 Stn Sequencer, Dual Head, VCD, DIP Inserter, Excellent condition. Make offer	£call

TEST EQUIPMENT

MARCONI 2019 Signal Generator	£1,650
MARCONI 2371 Spectrum Analyser	£1,975
H.P. 3325A Function Generator	£1,750
TEK 2445 Oscilloscope	£1,350
TEK 2465 Oscilloscope	£1,995

SPECIAL OFFERS

All ex-stock. Callers welcome.

BLUNDELL Vaculamp	£250
BLUNDELL Cropmatic	£4,500
ELITE "FORMETT" Axial Lead Form	£495
ELITE "VB" Axial Lead Cut + Bend	£275
HELLER 715 Auto Axial Lead Form*	£2,955
HELLER D277-36 Auto DIP Lead Processsor*	£1,495
DEK 1200 Screen Printer	£495
DEK 1750 Screen Printer (for spares)	£195
DEK 1760RS Screen Printer	£895
EDWARDS E12E3 Coater	£198
K+S 1419-3 Automatic Gold Wire Bonder	£4,950
MRC SEM-8620 Sputter-Etch System	£795
FISCHER 870C Betascope	£1,350
CEMCO Pull-Peel Test Set	£125
CUSTOM CR1 Router	£125
CUSTOM CR2 Router	£198
EG +G 560B Lite-Mike	£56
PLANAR GB7 Gas Bonder	£135
CEMCO Solderability Tester	£475
ICI 1214 Vapour Phase Reflow Tank	£675
SOLBRAZE RD3 and RD6 "Rotadip" Solder Pots from	£425
SOLDERMATIC 800 Wave solder machine 240v single phase	£1,750
ICI AO Screen Cleaner	£675
ICI 6502AR Ultrasonic Cleaner	£875
GRIFFIN Bench Oven. AMB to + 200°C	£199
PERN 360 litre Burn-in Oven	£395
RINGWAY 250/640/48 Cold Chamber. AMB to - 40°C	£295

*** Factory refurbished**

DO YOU HAVE SURPLUS PRODUCTION/A.T.E. EQUIPMENT?

Bring your surplus assets to the expanding European marketplace through Buyers News – read by 20,000 key buyers in High Tech industries.

Subscribe Now for
Your FREE Copy

See latest issue of Buyers News for full listing and Terms & Conditions. Prices exclude VAT Buyers Premium not included

BUYERS NEWS Tel: 071-284 4074 (UK)
Fax: 071-267 7363 (UK)
146 Camden Street, London NW1 9PF

CIRCLE NO. 133 ON REPLY CARD

HALCYON ELECTRONICS

Test equipment, video monitors, amateur radio gear, printers, power supplies, communications, disk drives, multimeters, oscilloscopes, scientific instruments, connectors, component bridges, frequency counters, signal generators, computers.

TEK 453 50MHz DUAL TRACE DEL T/B	£249	EDDYSTONE 940 770U/R 740 730 680X 659 EC10	POA
TEK 465 100MHz DUAL TRACE DEL T/B	£450	LEVELL TG200DMP 1HZ-1MHZ OSC SIN/SQ	£95
SCOPEX 4D25 25MHZ DUAL TRACE	£169	LEVELL TG152 3HZ-300KHZ OSC SIN/SQ	£85
SCOPEX GP-SB1 (4S6) 1 TRACE LONG PERS	£99	LEVELL TM6B MICRO V-METER 450MHZ	£95
BECKMAN 9020 20MHZ DUAL TRACE	£249	LEVELL TM3B MICRO V-METER 3MHZ	£85
CROTECH 3030 1 TRACE 15MHZ COMP TESTER	£99	TU8B/TU9B TUNER UNITS BRAND NEW	£29/£39
DATA PRECISION 6000 WITH 611 PLUG-IN AND		OERTLING V20 SINGLE PAN BALANCES 200GM	£95
681 DISK DRIVE UNIT	£3995	MAGNIFYING BENCH LAMPS	From £25
GOULD OS3000A 40MHZ 2 TRACE, DEL T/B	£249	WIRELESS WORLD CIRCARDS SER 1-25 cased	£29
HAMEG 203-5 20MHZ, 2 TRACE, COMP TESTER	£249	SAGE 2-WAY CO-AX SWITCH SAN 2120 N CONNS	£95
HAMEG 203 20MHZ DUAL TRACE	£199	UDI 2026 SONAR SCANNER, SURFACE UNIT	£895
HITACHI VC 6015 10MHZ DIGITAL STORAGE	£395	B&K 1013 BFO & 2305 LEVEL RECORDER	£195
HITACHI V422 40MHZ DUAL TRACE	£295	UPA CAVIDERM CD6 P.T.H. TESTER	£750
H.P. 1340A X-Y DISPLAYS	£99	GOULD BRUSH 260 6-PEN CHART RECORDER	£95
LEADER LBO-9C ALIGNMENT SCOPE	£195	SONY HVC2010P COLOUR CAMERA	£95
TEK 5L4N 100KHZ SPECT ANAL WITH 5110 M/F,		MARCONI MARINE KESTREL 3	POA
2x 5A18N, 5B10N TIME BASE	£750	LOGIC ANALYSERS, VARIOUS	From £45 to £95

SUMMER CLEARANCE

MANY UNLISTED ITEMS AT GREATLY REDUCED PRICES FOR CALLERS ONLY

PHILIPS PM3400 SAMPLING SCOPE	£125	AVO C24575 LCR COMPONENT COMPARATOR	£75
TELEQUIPMENT D75, 50MHZ 2 TRACE DEL T/B	£225	ANALYTICAL BALANCES WITH WEIGHTS	£69
TEKTRONIX 7403N, DF1, 7D01 LOGIC ANAL	£495	LIGHT BOXES 230V 10X12" AREA	£49
TEK 545B, 585, 535A, 541A etc	From £49	DECADE R/C/V BOXES	FROM £15
TEK 545/585 SERIES PLUG-INS	From £10	KAYE DEE, PNEUMO UV EXP UNIT 390×260mm	£175
AJAX LEADER MARINE T/R 160-400k 10-4m	£59	VACUUM PUMPS TYP 100 MBAR (28L/MIN)	£95
CONSTANT VOLTAGE TRANSF'S 150VA-2KV	POA	CALIBRATION STANDARDS C/V/L/R	POA
WANDAL/GOLTERMAN SPM-2 SEL LEVEL METER	£169	COSSOR CRM533A VHF NAV/COM RF SIG GEN	£750
MARCONI TF2331 DIST'N FACTOR METER	£175	COSSOR CRM511 ILS/VOR AUDIO SIG GEN	
BBC-B & MASTER COMPUTERS	From £99	TOPAZ 91007-11 7·5KVA 120/240–120/240 ISOL	£249
MARCONI TF2300 FM/AM MODULATION METER	£195	KINGSHILL NS1540 15V 40A PSU CASED	£295
TEKTRONIX 834 PROG DATACOMMS TESTER	£895	MARCONI TF2330 WAVE ANALYSER	£150
VARIABLE OUTPUT PSU's HV & LV	From £29	HP 618C, 626A, 628A SIG GENS	£35 ea
TEKTRONIX 520 521A PAL V/SCOPES	From £475	SIGNAL GENERATORS AF TO 21GHz	From £15

LIST AVAILABLE, BUT 1000's OF UNLISTED BARGAINS FOR CALLERS
QUALITY ELECTRONIC EQUIPMENT BOUGHT. ALL PRICES EXC. OF P&P AND VAT

423, KINGSTON ROAD, WIMBLEDON CHASE, LONDON SW20 8JR
SHOP HOURS 9–5.30 MON–SAT. TEL 081-542 6383.

CIRCLE NO. 134 ON REPLY CARD

STEREO STABILIZER 5

- Rack mounting frequency shifter for howl reduction in public address and sound reinforcement.
- Mono version, box types and 5Hz fixed shift boards also available.

◆

- ★ Broadcast Monitor Receiver 150kHz–30MHz.
- ★ Advanced Active Aerial 4kHz–30MHz.
- ★ Stereo Variable Emphasis Limiter 3.
- ★ 10-Outlet Distribution Amplifier 4.
- ★ PPM10 In-vision PPM and chart recorder.
- ★ Twin Twin PPM Rack and Box Units.
- ★ PPM5 hybrid, PPM9 microprocessor and PPM8 IEC/DIN −50/+6dB drives and movements.
- ★ Broadcast Stereo Coders.
- ★ Stereo Disc Amplifiers.
- ★ Philips DC777 short wave car combination: discount £215+VAT. Also quick-release mount.

SURREY ELECTRONICS LTD
The Forge, Lucks Green, Cranleigh, GU6 7BG
Telephone: 0483 275997. Fax: 276477.

Circuits, Systems & Standards

First published in the US magazine EDN and edited here by Ian Hickman

Simplify FIR-filter design with a cookbook approach

Hardware-implemented digital signal processors promise real-time capability that is difficult to achieve in software, so an increasing number of hardware engineers now face the unfamiliar task of designing such systems. But the task is easier than might be thought and following a tried-and-true procedure can make it relatively painless. This article describes a procedure for finite-impulse-response (FIR) filters – one of the most commonly used digital filters.

Filtering in DSP reviewed

I guess any budding digital engineer will find this article valuable. Even for analogue engineers, it is handy to know what goes on at the digital side of the stream – I certainly found it useful.

IH

New devices implement filters in hardware

VLSI technology advances – resulting in new devices such as less-expensive and more-practical high-speed multiplier/accumulators – are behind the push towards hardware-implemented filters; the devices' speed accommodates real-time filtering not previously feasible. But to make good use of the devices, their capabilities and limitations must be understood. For example a device with too small a word size will be inadequate for some filtering applications.

Characteristics of different types of filters should be borne in mind (see box, "Comparison of FIR, IIR and lattice filters"), along with digital-filter design parameters and different design techniques. It is also helpful to know how digital filters compare with their analogue counterparts.

Digital filters have advantages

Digital and analogue filter types both perform the same basic function: passing signals in a specified frequency range and attenuating signals outside that range. But digital filters have certain advantages – sharper roll-offs and better stability over time, power-supply fluctuations and temperature, for example. As a result, they often find use in modems, digital oscilloscopes, spectrum analysers and speech and image-processing equipment. Digital filters also allow real-time changes in their characteristics (adaptive filtering), whereas many analogue filters require component changes to modify their frequency response.

For low-performance filtering (8- to 24dB/octave roll-off), analogue filters are less expensive than digital filters. But as roll-off requirements reach 24 to 36dB/octave, digital filters demand less complex implementations than do analogue filters, especially when pass-band ripple must be small. Moreover, prototype changes with digital filters often involve only software changes, and software simulation of a digital filter can reflect the filter's exact performance.

Filter design requires calculating coefficients

Designing a digital filter necessitates calculating the filter's coefficients which define the filter's performance characteristics (see box, "Digital filtering theory"). They filter an input signal's sample values through convolution – a process of multiplications and additions.

Digital-filter terminology

Attenuation: a decrease in output signal magnitude relative to the input signal.

Pass band: The frequency range of no signal attenuation. Signals in this range pass through the filter unaltered, except possibly for some gain in the pass band.

Stop-band: The frequency range of signal attenuation.

Stop-band attenuation: The minimum amount of attenuation in the stop-band.

Pass band ripple: Maximum amount of excursion in the pass-band from the desired output magnitude.

Sampling rate: Rate at which an A-to-D converter samples the input signal value.

Filter coefficients: Numbers that define a filter's characteristics, representing the Fourier transform of the desired filter transfer function.

Taps: Delays in a digital filter. The number of taps equals the number of filter coefficients and also the number of sampled input values processed by the filter for each output point.

Comparison of FIR, IIR and lattice filters

FIR filters are non-recursive; they have no feedback terms and their outputs are a function only of a finite number of previous input signals. Compared with IIR and lattice designs, FIR filters have several advantages:

- Stability. FIR filters have no poles in their transfer function, so output is always finite and stable. Absence of poles also means they have no analogue equivalent. IIR filters, on the other hand, require careful design to ensure stability.
- Linear phase response. With linear phase, the phase delay of the output signal increases linearly with frequency of the input signal; equivalently, the output has a constant time delay with respect to the input signal. Linear phase is useful in applications such as speech processing, sonar and radar, where knowledge of the phase delay is necessary. IIR filters, unlike the FIR type, have non-linear phase response.
- Ease of design. The FIR filter is the easiest of the three types to understand, design and implement.
- Low sensitivity to coefficient accuracy allows FIR-filter implementation with small word sizes. A typical range of FIR-coefficient accuracy is 12 to 16 bits, whereas typical IIR filters need 16 to 24 bits per coefficient.
- Simple implementation of adaptive FIR filters. Adaptive filters change their coefficients in real time to accommodate changes in external conditions. Modems' equalisation filters, for example, change their characteristics in response to transmission-line degradations.

Unlike FIR filters, IIR filters are recursive. Their outputs derive both from previous input values and previous output values fed back into the circuit. As in all feedback circuits, positive feedback with gain greater than one results in instability. IIRs need large coefficient word sizes to ensure stability, and their phase shift is nonlinear with frequency. IIR filters, however, have several advantages compared with FIR units and lattice designs:

- Highest efficiency. IIR filters have the fewest coefficients, resulting in the smallest number of multiplications and the highest throughput.
- Smallest storage requirements. An IIR filter has the fewest coefficients, so it requires the least amount of rom storage. For example, an IIR high-pass filter typically requires only one-third the coefficients of an equivalent FIR filter.

Lattice filters are the newest form of digital filter; they promise greater stability than IIR filters and use less hardware than FIR designs. But because they are new the theory describing them is not well developed, and they are difficult to design. In addition, like IIR filters, they show high sensitivity to coefficient accuracy.

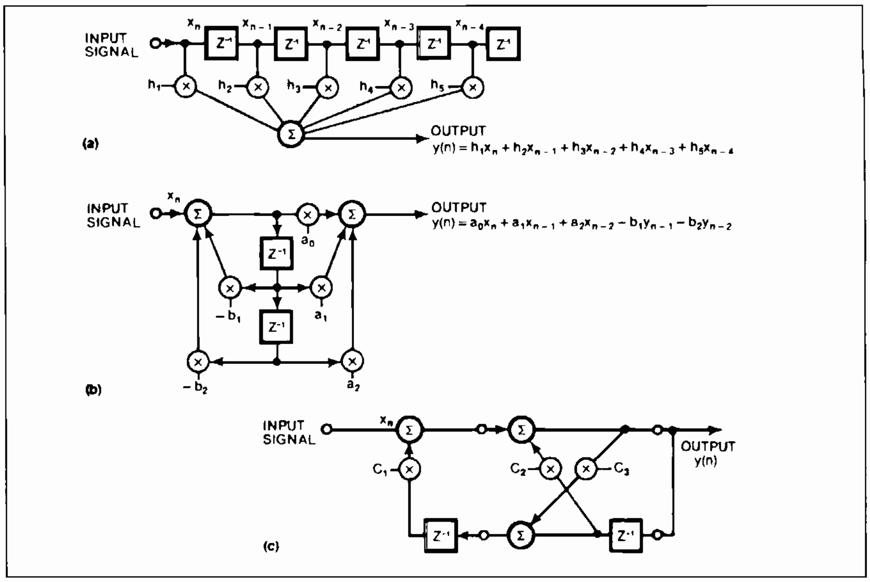

Illustrating the differences between FIR (a), IIR (b) and lattice (c) filters.

Digital filters have performance aspects similar to those of analogue filters – a certain ripple in the pass-band and a certain attenuation in the stop-band, for example (see box, "Digital-filter terminology"). To generate an FIR filter's coefficients, the following design parameters must be specified (**Fig. 1**):

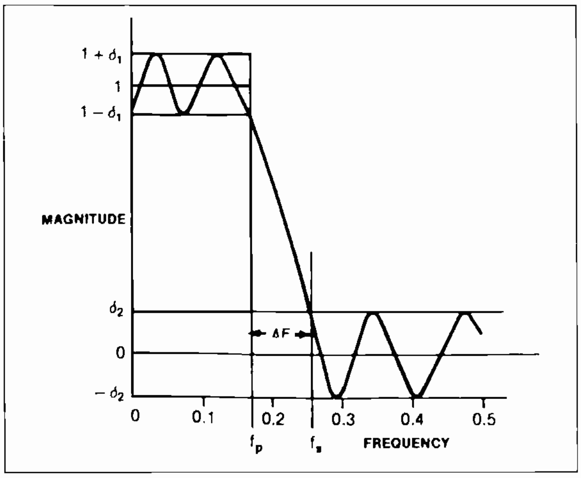

Fig. 1. Pass band and stop band cut off frequencies (f_p and f_s, respectively) and ripple (δ_1 and δ_2) help specify the performance of a low-pass filter. Similar specifications define high-pass and band pass filters.

- N, the number of taps in the filter, equalling the number of filter coefficients.
- f_p, the normalised pass-band cut-off frequency
- f_s, the normalised stop-band cut-off frequency
- $K=(\delta_1/\delta_2)$, the ratio of the ripple in the pass-band to the ripple in the stop-band.

For example, a filter with a 100kHz sampling frequency, 10kHz actual pass-band cut-off frequency and 20kHz actual stop-band cut off frequency has a normalised pass-band cut off frequency f_p equalling 10kHz/100kHz=0.1 and a normalised f_s equalling 20kHz/100kHz=0.2.

In addition, pass-band and stop-band ripple are often expressed in decibels:

pass band ripple (dB)=$20\log_{10}(1+\delta_1)$

stop band ripple (dB)=$-20\log_{10}(\delta_2)$.

By convention, f_p and f_s are expressed in units of normalised frequency – actual signal frequency divided by the sampling frequency. Typical values for pass-band ripple range from 1 to 0.001dB, and values for stop-band

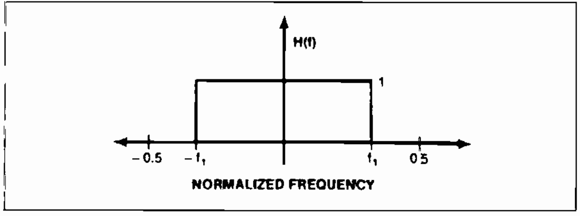

Fig. 2. A low pass filter's ideal transfer function unity gain from DC to the cut off frequency, f_1, and zero gain at higher frequencies.

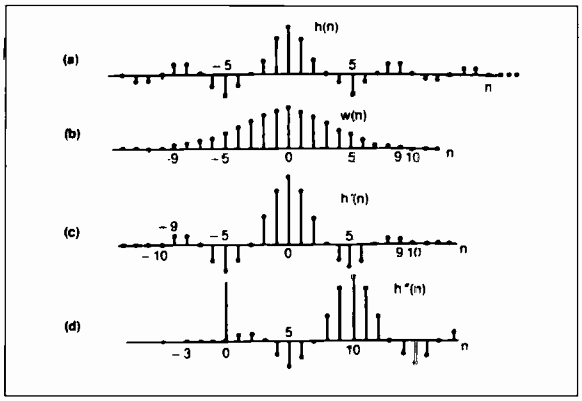

Fig. 3. Fourier coefficients h(n) (a) result from performing the inverse Fourier transform of the filter's desired transfer function (Fig. 2). Multiplication of the coefficients by samples w(n) from a weighted window (b) yields filter coefficients h'(n) (c) which require shifting (d).

ripple are typically between 10 and 90dB.

Note that the normalised frequency axis extends from 0.0 to 0.5, because the Nyquist sampling theorem requires sampling a signal at more than twice its highest frequency component for accurate signal reconstruction. Thus, the ratio of any signal frequency to its sampling frequency must always be less than 0.5 to avoid aliasing errors; keeping the values below 0.33, as in this example, merely is conservative design.

Several trade-offs exist among the design parameters. With a fixed number of filter taps, for example, steeper roll off means more ripple. Obtaining both small ripple and a steep roll off requires increasing the number of taps (and hardware) in the digital filter.

Two design techniques predominate

The two most commonly used FIR filter design techniques are the traditional windowing method and the Remez Exchange algorithm. The latter is preferable because it always results in a more efficient filter; it is also available in Fortran[2, 4] to assist in the design process. (A free program listing is available from Analog Devices's DSP Marketing Dept.)

Windowing is simple to use, and it generates filter coefficients with minimal computation. Unfortunately, it satisfies no known optimising criterion[5].

A design example serves to illustrate the technique: consider a low-pass filter with a desired stop band attenuation of 50dB or more, a normalised pass band cut off frequency of 0.2 and a normalised stop band cut off frequency of 0.3. Actual cut off frequencies depend on the filter's sampling frequency.The ideal transfer function for the filter, H(*f*), appears in **Fig. 2**. To obtain the Fourier series coefficients, solve the inverse Fourier transform:

$$\mathrm{h}(n)=\int_{-0.5}^{0.5}\left(e^{j2\pi f}\right)e^{j2\pi fn}\,\mathrm{df}$$

$$\mathrm{h}(n)=\int_{-f_1}^{+f_1}e^{j2\pi fn}\,\mathrm{df}$$

$$\mathrm{h}(n)=\frac{\sin(\pi f_1 n)}{\pi n}$$

Now select a window with an applied weighting function that truncates the infinite Fourier series above and below specified limits (**Fig. 3**). The window weights the Fourier series coefficients by different amounts to generate the filter's coefficients – the window's width determines the required number of coefficients. Result is a finite-impulse-response approximation (hence the filter's name) to the desired transfer function H(*f*). This design example uses one of the more widely used windows, the Hamming window; other commonly used windows include the Kaiser, Blackman, and Hanning windows[1].

After choosing a weighted window, determine the number of filter coefficients – a number which comes from the designed roll off band, $\Delta F=f_s-f_p$

For the Hamming window, $\Delta F\approx 4/N$. In this design example, $\Delta F=f_s-f_p=(0.3-0.2)=0.1$, so $N\approx 4/\Delta F=4/0.1=40$.

The approximation usually yields a slightly larger number of taps (*N*) than the filter actually needs, so a downward adjustment (by two to five taps in this case) is a practical measure for meeting design specs without producing an excessive number of multiplications in the filter's implementation. In this example, a value of 36 for *N* is reasonable.

The actual filter coefficients, h'(*n*), result from multiplying each Fourier coefficient, h(*n*), by its corresponding weight, w(*n*). But because the coefficients are symmetrical only half of them require computing. (The coefficients are symmetrical because they describe the function (sin *x*)/*x* shown in **Fig 3a,** which implements a low-pass filter and which is the Fourier transform of the H(*f*) shown in Fig 2.)

Remez Exchange Algorithm aids design

The Remez Exchange algorithm is another, very powerful, method for designing FIR filters, using linear programming techniques to estimate filter order with approximate relationships between filter parameters[6, 7]. Understanding of its operation is not important – only how to use its[2, 4] Fortran implementations.

The Remez Exchange algorithm yields optimal filters that satisfy the so-called minimax error criterion[6]: For a given number of coefficients, the filter minimises the maximum ripple in the pass band.

This criterion has two major implications: the Remez Exchange yields an FIR filter with the smallest number of filter coefficients, so it uses less memory and operates more rapidly than filters produced from window designs. Pass band ripple components also all have equal amplitude (assuming no quantisation errors). Pass band ripple need not equal the stop band ripple, but their ratio must be specified.

For an example design procedure using the Remez Exchange program, assume a fixed 50kHz sampling rate, a 10kHz pass band frequency and a 14kHz stop band frequency. Normalised pass band and stop band frequencies are f_p=0.20 and f_s=0.28. Assume also that the desired minimum stop band attenuation is 40dB, the desired maximum pass band ripple is 0.20dB and that pass band and stop band ripple are equal ($\delta_l/\delta_s=1$).

Inputs to the Remez Exchange program include these design parameters and a few control parameters. Program output contains an estimate for the required number of filter taps, *N*, plus computed values for the filter coefficients. It also contains first-pass computed values for design parameters such as pass band ripple and stop band attenuation; if the computed values fall short of design goals, *N* must be increased slightly and the program run again.

In the design example previously outlined, the Remez Exchange program recommends a 24-tap filter, and estimates a pass band ripple of 0.18dB for such a filter. It also predicts a 39.08dB stop band attenuation – slightly short of the design goal. But by instructing the program to

Digital filter theory

Consider the frequency domain and assume a signal H(*f*) with a magnitude graph in the frequency domain as shown in (a). This graph merely shows the signal's frequency components – cosine waves at particular frequencies. For example, a signal expressed as cos(2π3t) has one frequency component, at 3Hz. The signal H(*f*) contains frequency components from 0 to f_1Hz, which means that in H(*f*) can be found cosine waves which have frequencies from 0 to f, Hz. Note that the highest frequency component of H(*f*) is f_1; any cosine signal with frequency higher than f_1 is not part of H(*f*).

Now consider a second signal, X(*f*), whose frequency-domain graph appears in (b). This graph shows that X(*f*) has only two frequency components – f_2 and f_3. X(*f*) is the sum of cos($2\pi f_2 n$) and cos($2\pi f_3 n$).

Suppose the *X(f)* signal needed to be separated out to obtain only the cosine wave at frequency f_2 (c). It would be ideal just to multiply the signal H(*f*) by the signal *X(f)*, because H(*f*)=1 at frequency f_2 and H(f_2)=0 at frequency f_3. The result would be the required cos($2\pi f_2 n$).

Fortunately, the desired multiplication can be performed by using a trick from Fourier's theorem. Fourier showed that multiplication in the frequency domain is analogous to convolution in the time domain.

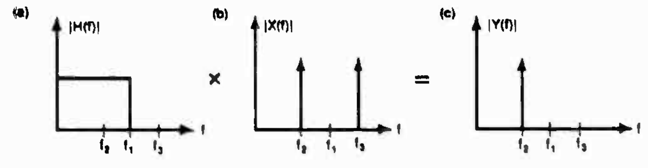

Multiplication of signals in the frequency domain is equivalent to convolution in the time domain.

Convolution is just a series of multiplications and additions performed in a particular order. The convolution equation states that:

$$y(n)=h(n)*x(n)$$

$$=\sum_{m=1}^{N} h(m)*(n-m)$$

where * indicates a special convolution operator. The equation assumes that h(*n*) is zero for *m*<1 and for *m*>*N* – always true for FIR filters. What the equation states is that performing the specified series of multiplications and additions will automatically low-pass-filter the input signal x(*n*). Fourier's theorem takes care of the why and how, so all we need to know is what to do (the multiplications and additions) to implement the filter.

Now consider a practical example of the equation. For a 27th order FIR filter, *N*=27; the 28th output value computed will be

$$y(28)=h(1)x(27)+h(2)x(26)+h(3)x(25)+ \ldots +h(26)x(2)+h(27)x(1)$$

These multiplications and additions perform the convolution.

What are the h(*n*) and x(*n*) signals? They are the Fourier transforms of the signal H(*f*) and X(*f*).

Solving the Fourier integral is not a problem, as it turns out that the Fourier transform of X(*f*) is a simple cosine wave,

$$x(t)=\cos(2\pi f_2 t)+\cos(2\pi f_3 t).$$

A pocket calculator can be used to calculate the sample values of x(*t*) and x(*n*) if f_2, f_3 and the sample rate are known. The values of h(*n*) are slightly more complicated; their computation requires a computer program. Note that the h(*n*) values are filter coefficients, and when multiplied by the x(*n*) values they implement a low-pass filter.

---

consider more taps, the design can be tuned.

Experimentation finally yields a 27-tap filter that satisfies the design specifications (41.07dB stop band attenuation and 0.15dB pass band ripple).

Implement the filter in hardware

Having designed the FIR filter on paper, we are now ready to put it in hardware. As an illustration, go back to the previous 27-tap filter and assume its implementation in hardware having 16-bit words. A block diagram for a hardware FIR filter appears in **Fig. 4**.

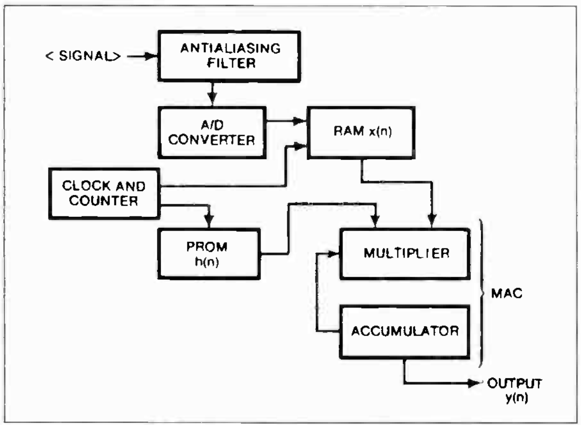

Fig. 4. Digital filter operation. The sampled input signal goes to ram and is operated on by filter coefficients stored in prom.

The input block is an anti-aliasing filter – an analogue filter that prevents sampling of high-frequency noise components. It is not a high-performance filter, but it does need good attenuation at the noise frequencies. Typical roll off characteristics for anti-aliasing filters are 6-24dB/octave.

The anti-aliasing filter's output goes to an A-to-D converter, which samples the incoming analogue signal at a given frequency and converts it to digital form. Sampling frequency should be approximately three times the input signal's highest frequency component. From the A-to-D, the samples go to a ram (with size *N* taps x 16 bits/word) for storage. The 27-tap filter, for example, needs 27 16-bit locations.

A prom typically stores the filter coefficients, although a ram can replace the prom. The number of required memory locations equals the number of different filter coefficients, because an FIR filter's coefficients are symmetrical; the number of different coefficients is *N*/2 when *N* is even and 1 + *N*/2 when *N* is odd. In the example 27th-order filter, 14 locations are necessary. A clock and counter circuit steps through the ram and the prom, presenting the coefficients and input values to a multiplier.

Actually, the multiplier is part of a multiplier/accumulator (MAC), which multiplies the filter's coefficients by the signal's input values. Analog Devices's *ADSP1010* is one such device; it features 16 x 16bit multiplication and has a 35-bit accumulator, providing three bits of extended precision to handle overflows from the addition of multiple 32-bit products.

Examine each design component

Using the hardware block diagram as a structural base, let us look at the design details of each block element.

First, store the filter coefficients in the prom after obtaining their 16bit fixed-point (or floating-point) representation. For a fixed-point arithmetic system, multiply each coefficient by 2^{15}; for a floating-point system, convert the coefficients to the system's required format.

Round off – do not truncate – the coefficient values to the nearest least significant bit. Rounding preserves the accuracy of the filter-coefficient values, and results in filter performance close to the theoretical limit for a system's number of bits. Store the rounded 16-bit coefficients in the prom.

It must also be ascertained whether an external multiplier chip is necessary to handle the filter's speed requirements, or whether the multiplications can be performed with a µP. To decide, calculate the multiplication rate that the filter requires, and the number of multiplications per second equals the sampling rate times the number of coefficients.

In the example 27-tap filter, the sampling rate is 50kHz, and the number of multiply/accumulates is thus 50,000 x 27 = 1,350,000. The processing time per multiply/accumulate is therefore 1/(1,350,000)=740ns. This multiply/accumulate time is too short for ILPs, so the filter implementation requires a separate multiplier chip.

To coordinate the filter multiplications, ensure that the memory-control circuitry (ram, prom, counter) retrieves the correct words from ram and prom; data pointers can assist in this process, as **Fig. 5** shows. Pointer 2 directs the storage of each new data point on a stack (actually a circular buffer), and a multiplication procedure uses pointers 1 and 3 for determining which filter-coordinates and data-samples require multiplying at any one time.

The procedure for choosing coefficients and samples to multiply is fairly simple. For the pointer positions of Fig 5, the filter output sample is

$$h(4) \times (n-3)+h(3) \times (n-2)+h(2) \times (n-1)$$
$$+h(1) \times (n)+h(5) \times (n-4)+h(6) \times (n-5).$$

After computing each sample, increment pointers 2 and 3, resetting the pointers when they reach the stack boundary.

Next, decide how to handle accumulator overflow.

When a filter performs its multiplications and accumulates the sum of products, the required number of bits usually exceeds the 32-bit result of a 16 x 16 multiply. To handle this, first calculate a reasonable upper bound for the amount of overflow the filter can experience. If this upper bound exceeds the accumulator's capacity, additional steps will have to be taken.

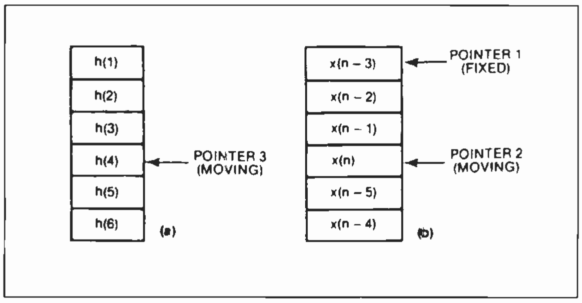

Fig. 5. Stacks with fixed and moving pointers assist a convolution process. The stacks hold filter coefficients (a) and data samples (b).

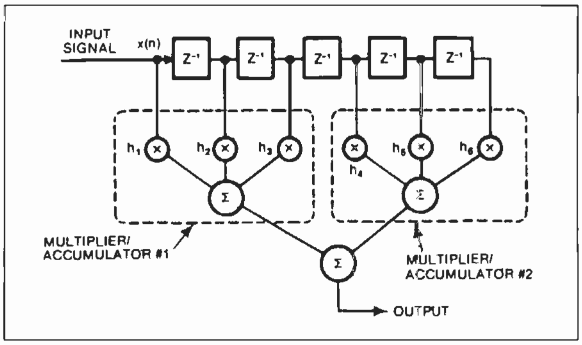

Fig. 6. Parallel multiplier/accumulators speed digital filtering in high-throughput applications.

Three different procedures can handle overflow.

An easy method uses the multiplier/accumulator's extended precision bits, while an alternative method scales the coefficients down by one to five bits. This latter approach sacrifices some accuracy in the filter for the considerable advantage of overflow prevention.

A third method allows the accumulator to saturate at its maximum value. For some applications, the full dynamic range of the input signal need not be accommodated, purposely allowing overflow to occur.

Finally, it must be determined whether a parallel architecture is needed to meet speed requirements. Some filters require a multiply/accumulate speed faster than one MAC can handle. A parallel architecture (**Fig. 6**) uses two or more multipliers or processors to increase throughput, but the 27 tap example filter requires only one multiplier.

Software simulation detects resolution problems

After designing a filter, simulating it in software can help detect potential problems with hardware resolution. One significant advantage of digital filters is that their performance can be modelled exactly with software. But before examining the simulation procedure, weigh up the potential hardware problems which often result from limited processor precision[3].

One contributing factor is the rounding of filter coefficients computed on a high-precision mainframe

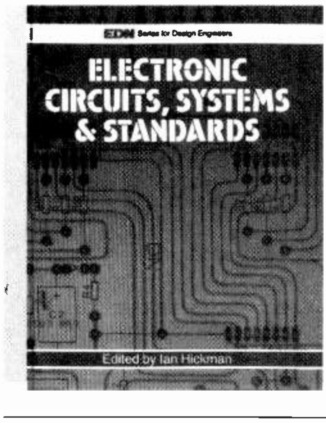

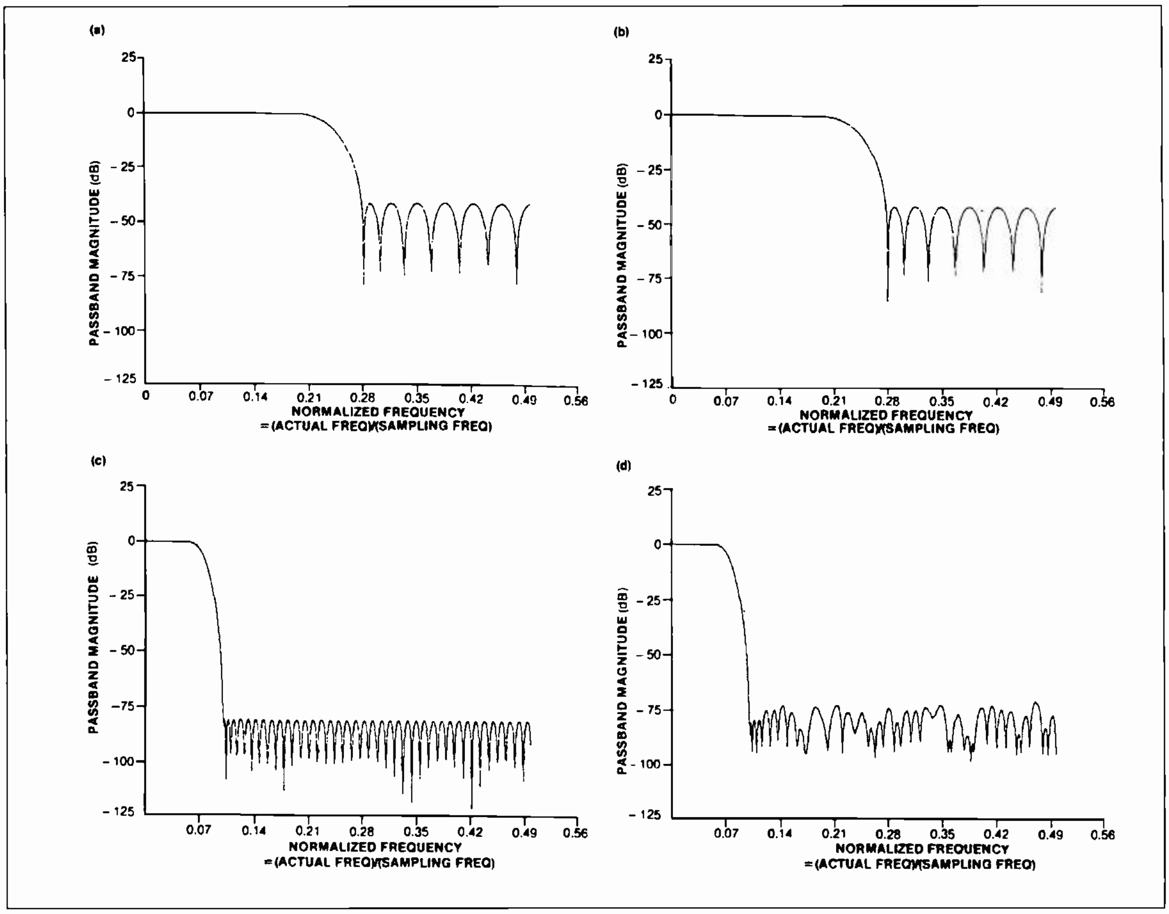

Fig. 7. Rounding errors can result from employing small word sizes in digital-filter implementations. A 27 tap 32bit filter's performance (a) is essentially duplicated by that of a 16bit version (b) but response degrades when a 90 tap 32bit filter (c) is implemented in 16bit hardware (d).

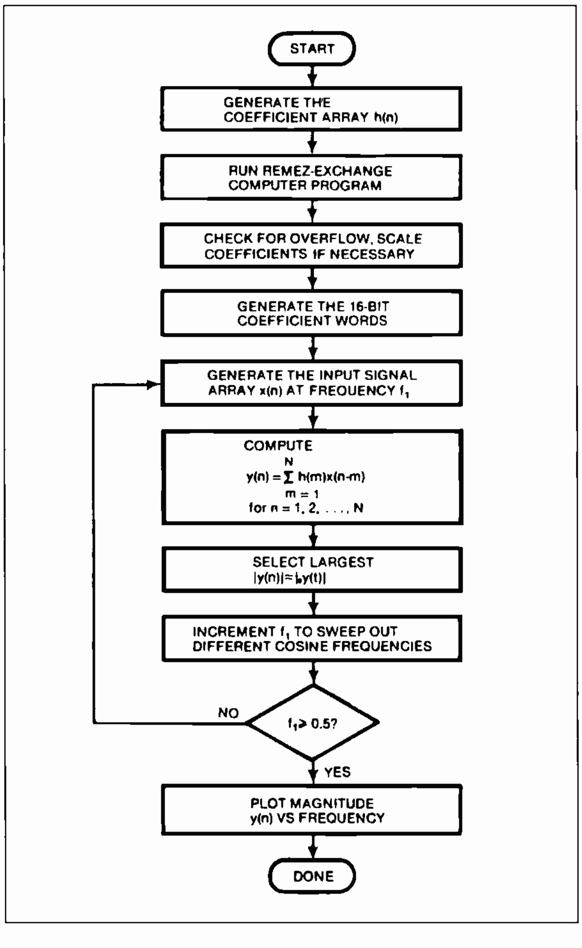

Fig. 8. Software simulation of digital filters. Simulation helps detect potential problems before hardware implementation

computer to the 16bits of the filter hardware's memory width. Rounding coefficients before storage in prom produces less error than truncating the coefficients, but it produces error nonetheless. Furthermore, round off errors result from the many sequential finite-precision multiplications and accumulations; arithmetic results must frequently be truncated to fit into finite-width registers. These cumulative errors are more significant than coefficient-rounding errors for high-order filters, and they cause a deterioration of filter performance compared with the performance originally calculated on a mainframe.

But will word size will cause problems for a filter? In 16bit systems, based on simulations of many FIR filters, if shooting for more than 67dB of stop band attenuation or less than 0.05dB of pass band ripple, software simulation should definitely be carried out because hardware resolution problems can reasonably be detected. Software simulation determines whether 16bit resolution is adequate or whether higher resolution, (24 or 32 bits) is needed.

How serious are errors arising from limited processor precision? **Fig.** 7 shows simulated performance results for the example 27 tap filter and for a 90-tap filter with low-pass-band cut off frequency. Errors generated for the 90 tap filter are much more significant than those for the 27 tap filter, even though both use 16bit arithmetic. More importantly, the 90 tap filter does not yield the 80dB stop band attenuation calculated on a mainframe with 32bit arithmetic.The simulation shows that 80dB stop band attenuation requires more than 16bits of resolution.

Simulate the filter with a Fortran program

A Fortran program available from Analog Devices's DSP Marketing Dept performs the actual filter simulation. It simulates FIR filters using the *ADSP1010* 16 x 16 multiplier/accumulator.

Simulation starts by (**Fig. 8**) obtaining an accurate representation of the filter coefficients as they will appear in the hardware. To do this, the program repeats the steps in the hardware design. It obtains the filter coefficients h(*n*) from the Remez Exchange computer program, performs overflow checking and any necessary scaling of the coefficients and obtains the 16bit fixed-point or floating-point coefficient representation.

The array of coefficients simulates the hardware filter's prom, which stores the coefficients in the same format.

Next, the program simulates a digitised input signal by generating an input signal array x(*n*); the number of values in the array is the same as the number of filter taps. The first input signal array is a cosine wave of frequency 0Hz, sampled at the sampling rate of the simulated system. The input signal array simulates the A-to-D converter and the ram that stores the input signal values. The program later generates input signals with higher frequencies.

Next, the program performs all arithmetic operations with 16bit precision. An accumulator-overflow check, verifying the coefficient, scaling, is included, performed before storing the coefficients in prom. If the software flags an accumulator overflow, the coefficients must be scaled down further and the simulation rerun.

Finally, the program computes the filter output values, y(*n*), by setting up a loop to perform filter convolution. It computes an output value for each cosine frequency value; each computation involves *N* multiplications and additions, where *N* is the number of filter taps.

To find the magnitude of the filter's output, the program chooses the largest absolute value from the output y(*n*) array. This value is usually very close to the actual magnitude of y(*n*) – finding a more exact magnitude requires interpolation. Having computed the output magnitude for a particular cosine input frequency (0Hz), the program computes the frequency response for a range of frequencies. It typically sweeps from 0Hz to just below the Nyquist frequency of 0.500. The result is a filter transfer function (Fig. 7). If the simulation results match the filter requirements, hardware can be built with confidence. ■

References

1. Harris, Frederick J. "On the Use of Windows for Harmonic Analysis with the Discrete Fourier Transform," *Proceedings of the IEEE*, Vol 66, No 1, January 1978.
2. McClellan, J H, Parks, T W, and Rabiner, L R, "A Computer Program for Designing Optimum FIR Linear Phase Digital Filters," *IEEE Transactions on Audio and Electroacoustics*, Vol AU-21, No 8, December 1973.
3. Oppenheim, A V, and Schater, R W, *Digital Signal Processing*, Prentice-Hall Inc, Englewood Cliffs, NJ, 1975 Chapter 9.
4. Peled, A, and Liu, B, *Digital Signal Processing*, John *Wiley* and Sons Inc, New York, NY, 1976. Chapter 2.
5. Rabiner, L R, and Gold, B, *Theory and Application of Digital Signal Processing*, Prentice-Hall Inc, Englewood Cliffs, NJ 1975, Chapter 3.
6. Rabiner, L R, "Practical Design Rules for Optimum Finite Impulse Response Low-Pass Digital Filters," *Bell System Technical Journal*, Vol 52, No 6, July-August, 1973.
7. Rabiner, L R, "Approximate Design Relationships for Low-Pass FIR Digital Filters," *IEEE Transactions on Audio and Electroacoustics*, Vol AU-21, No 5, October 1973.

Bill Windsor, Harvard Business School and **Paul Toldalagi,** Analog Devices Inc.

Many Radio Amateurs and SWL's are puzzled. Just what are all those strange signals you can hear but not identify on the Short Wave Bands? A few of them such as CW, RTTY, Packet and Amtor you'll know – but what about the many other signals?

Hoka Electronics have the answer! There are some well known CW/RTTY decoders with limited facilities and high prices, complete with expensive PROMS for upgrading etc., but then there is CODE3 from Hoka Electronics! It's up to you to make the choice – but it will be easy once you know more about Code3. Code3 works on any IBM-compatible computer with MS-DOS 2.0 or later and having at least 640k of RAM. The Code3 hardware includes a digital FSK Convertor unit with built-in 230V ac power supply and RS232 cable, ready to use. You'll also get the best software ever made to decode all kinds of data transmissions. Code3 is the most sophisticated decoder available and the best news of all is that it only costs **£299**!

- Morse – Manual/Auto speed follow. On screen WPM indicator
- RTTY/Baudot/Murray/ITA2/CCITT2 plus all bit inversions
- Sitor – CCIR 625/476-4, ARQ, SBRS/CBRS FEC, NAVTEX etc
- AX25 Packet with selective callsign monitoring, 300 Baud
- Facsimile, all RPM/IOC (up to 16 shades at 1024x768 pixels)
- Autospec – Mk's I and II with all known interleaves
- DUP-ARQ Artrac – 125 Baud Simplex ARQ
- Twinplex – 100 Baud F7BC Simplex ARQ
- ASCII – CCITT 6, variable character lengths/parity
- ARQ6-90/98 – 200 Baud Simplex ARQ
- SI-ARQ/ARQ-S – ARQ 1000 simplex
- SWED-ARQ/ARQ-SWE – CCIR 518 variant
- ARQ-E/ARQ1000 Duplex
- ARQ-N – ARQ1000 Duplex variant
- ARQ-E3 – CCIR 519 variant
- ARQ6-70 – 200 Baud Simplex ARQ
- POL-ARQ – 100 baud Duplex ARQ
- TDM242/ARQ-M2/M4-242 – CCIR 242 with 1/2/4 channels
- TDM342/ARQ-M2/M4 – CCIR 342-2 with 1/2/4 channels
- FEC-A – FEC 100A/FEC101
- FEC-S – FEC1000 Simplex
- Sports info. – 300 Baud ASCII F7BC
- Hellscreiber – Synch./Asynch
- Sitor RAW – (Normal Sitor but without synchronisation)
- F7 BBN – 2-channel FDM RTTY

COMING SOON: Packtor

All the above modes are preset with the most commonly seen baudrate setting and number of channels which can be easily changed at will whilst decoding. Multi-channel systems display ALL channels on screen *at the same time*. Split screen with one window continually displaying channel control signal status e.g. Idle Alphas/Beta/RQ's etc., along with all system parameter settings e.g. Unshift on space, *Shift on Space*, multiple carriage returns inhibit, auto receiver drift compensation, printer on, system sub-mode. Any transmitted error correction information is used to minimise received errors. Baudot and Sitor both react correctly to third shift signals (e.g. Cyrillic) to generate ungarbled text unlike some other decoders which get 'stuck' in figures mode!

Six Options are currently available extra to the above standard specification as follows: 1) Oscilloscope. Displays frequency against time. Split screen storage/real time. Great for tuning and analysis. £29. 2) Piccolo Mk 6. British multi-tone system that only we can decode with a PCI £59. 3) Ascii Storage. Save to disc any decoded ascii text for later processing. £29. 4) Coquelet – French multi-tone system, again only on offer from Hoka! £59. 5) 4 Special ARQ and FEC systems i.e. TORG-10/11, ROU-FEC/RUM-FEC, HC-ARQ (ICRC) and HNG-FEC. £69. 6) Auto-classification. Why not let the PC tell YOU what the keying system is? £59.

NEW VERSION 4.00 JUST RELEASED – Now with improved user interface and even more features!

Please add £5 to the above prices for Carriage by fully insured First Class postal delivery (default mode).
Call or write for our comprehensive information leaflet – there is just not enough room here to tell you everything about Code3!
Professional users – please ask about our new CODE30 DSP unit available soon! (Piccolo down to −12dB S/N!!). Prices start from £1250.

HOKA ELECTRONICS (UK)
26 Bury Road, Shillington, Hitchin, Herts., SG5 3NY
Phone (0462) 711600 or Fax (0462) 711769

CIRCLE NO. 136 ON REPLY CARD

REGULARS

LETTERS

Concepts and cultures

George Overton is a bit too dismissive of "Eastern mysticism" in his letter "Sculpting the quantum world" (*EW + WW*, June 1992). Mysticism has acquired a pejorative sense implying obscure or woolly ideas. But looking at Eastern mystic thinking reveals it as perfectly clear, although strange to us in the West.

To take one instance, Nagarjuna, a 2nd century Indian Buddhist monk, argued time did not exist independently of events in space. Time as an independent entity was a mental construct. It has taken many centuries for Western science to reach a similar conclusion. Only recently have we abandoned ideas of absolute time and formulated the space-time continuum. We needed recent cosmological theory to pronounce time did not exist before the Big Bang because only then did physical change begin.

Early Japanese clock-makers, though not mystics, recognised primacy of real physical events over mental pictures of time. Their clock "hours" were continuously varied in length to fit daylight periods between dawn and dusk as it changed with the seasons.

Tom Ivall
Middlesex

Mixing it

I was intrigued to read Tim McCormick's article "Putting Mic Amplifiers on the Line" (*EW + WW*, June 1992). As someone who has designed quite a few of these, I would like to offer some constructive criticism.

I am profoundly uneasy about transistor use without any negative feedback, or any other linearising stratagem. It is a long time since we could assume that whatever electronics did to a signal, recording media would do something worse. A THD at 2V output of 0.08% implies 0.02% at a common operating level of 500mV RMS, and is surely too much distortion for the first stage in a long audio chain. A good professional mixing console would pass a signal of ten times the amplitude through all its stages without a 1kHz THD exceeding 0.005%. It is essential to find a way of wrapping negative feedback loops around input devices.

Configuration seems to need no less than three presets to enable it to work properly and is a cause for concern and disincentive to quantity manufacture. Phantom power presets should certainly be unnecessary; normal negative feedback should take care of setting DC conditions, and final CMRR presets are only required because McCormick's circuit does not exploit inherent CMRR of a differential pair, but relies on exact quantities of resistor values around IC_3. Use of a standard differential amplifier as a phase-summer will always leave CMRR in the hands of resistor matching.

I winced at the presence of R_{22}, whose sole function appears to be imperiling noise performance by coupling supply-rail disturbances into output in combination with R_{21}. Capacitor distortion from $C_{9,10}$ could occur at very low frequencies, but only when driving largely mythical 600Ω loads; a correct solution is simply to increase capacitance so that no significant voltage (say less than 500mV pk-pk) can occur across it in the audio band.

I have used devices of the *BC461/2N4403* type myself many times when no purpose-designed low-R_b devices were available or affordable, but much better transistors now exist. Those designed for moving-coil head amps (eg *2SB737*) have lower 1/f noise, and reduce R_b to a few Ohms. Since R_b effectively appears twice in series with source resistance, it is worthwhile minimising. There appears to be no transistor protection against turn-on/off of +48V phantom feed. I would have thought reverse-diodes between base and emitter, at least, should be included.

If I may shamelessly state my own reference point when looking at mic preamp design, the art as practised at Soundcraft provides a single-knob gain range of 2-70dB (eliminating the archaic switched input pad) and THD below 0.002% at +20dBu between 20Hz and 20kHz. It uses less than half the parts count of the published circuit.

Douglas Self
Forest Gate
London

Putting correct numbers into HDTV

Aubrey Harris's article "Putting the right numbers in HDTV" (*EW + WW*, June 1992) states adoption of 16/9 widescreen format for 1250-line HDTV increases required video bandwidth from 22MHz to 39MHz. But increasing aspect ratio by a factor of 4/3 would increase video bandwidth also by a factor of 4/3 to 29.3MHz. Vertical resolution is not affected by this change.

A 16/9 widescreen 625-line format, foreseen for use by the pal-plus group and widescreen mac, will conform to CCIR rec 601 for 422 component digital video transmission, with 720 pixels per active line period (as for 4/3 aspect ratio 625-line standard). It remains compatible with the 270Mbit/s series component digital standard. In analogue terms this is equivalent to a video bandwidth that does not change in transition from a 4/3 to 16/9 aspect ratio.

Brian Flowers
European Broadcasting Union
Brussels

View through the smog

Your Comment "Driving through the smog" (*EW + WW*, July 1992) was a really objective appraisal of a crazy approach by experts to problems of exhaust pollution.

But you are perhaps a bit unfair to electronics. Mechanical diesel injector pumps are excellent and very reliable but electronic systems such as Lucas Girling Epic can make diesel engines even better!

P D Gibbons
Cornwall

Satellite solutions

As a user of MVDS ("The potential and problems of radio-based TV", *EW + WW*, June 1992), known in Ireland as MMDS, I agree that the supplied technology certainly has its problems. Interference from microwave ovens can only be attenuated, not eliminated, by tuning; interference with radio signals, both long and medium wave, emanates from receiving apparatus; there is a dead zone adjacent to the transmitter; and programmes cannot be recorded while another channel is being watched, because receiving apparatus cannot give more than one output to the television.

I suggest abandoning terrestrial broadcasting transmitters, with all their attendant problems, and placing all BBC and ITV transmissions on to a satellite. These do not go off air due to electrical storms and give the added advantage that all existing TV aerials would be replaced by a more discrete dish. The BBC then could be sure of getting their licence fee by using smart cards.

Edward Donnelly
Co Galway

Calling all RFI sufferers!

Not long after moving house just recently I began to experience intermittent malfunctions with my home computer. These machine errors happened two or three times a day. I put it down to mechanical damage while moving.

Not having much knowledge of computer electronics, I called for a professional computer engineer, who gave my PC a thorough check. He told me that no fault could be found but suggested that as it was an intermittent problem and my PC was old, the machine could be susceptible to noise, not conducted, but radiated at some external source by Radio Frequency Interference (RFI). He also added it was not viable to work on an older computer and to invest in a new one.

Do older machines suffer from RFI?. Have any other readers experienced problems caused by RFI in computer or microprocessor

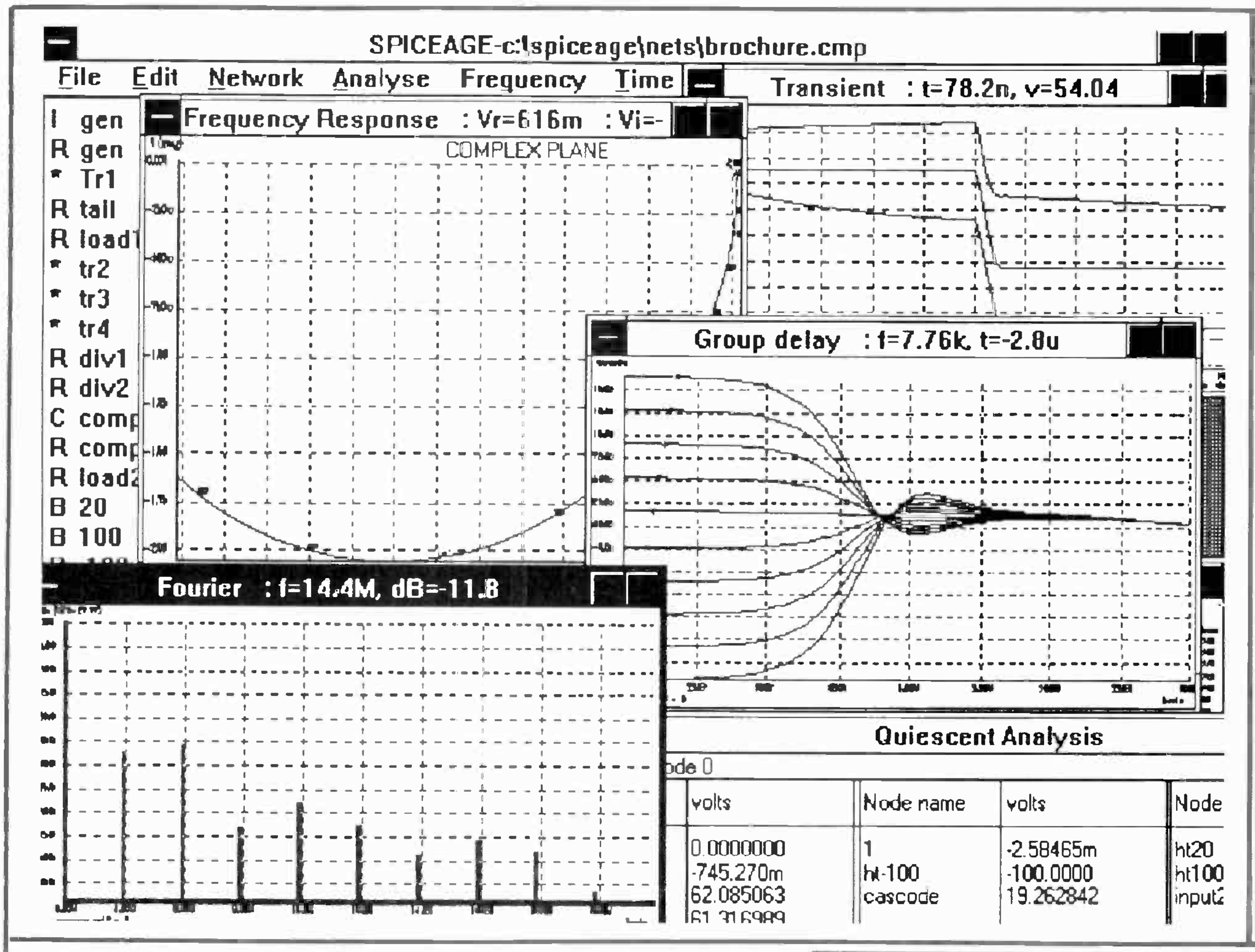

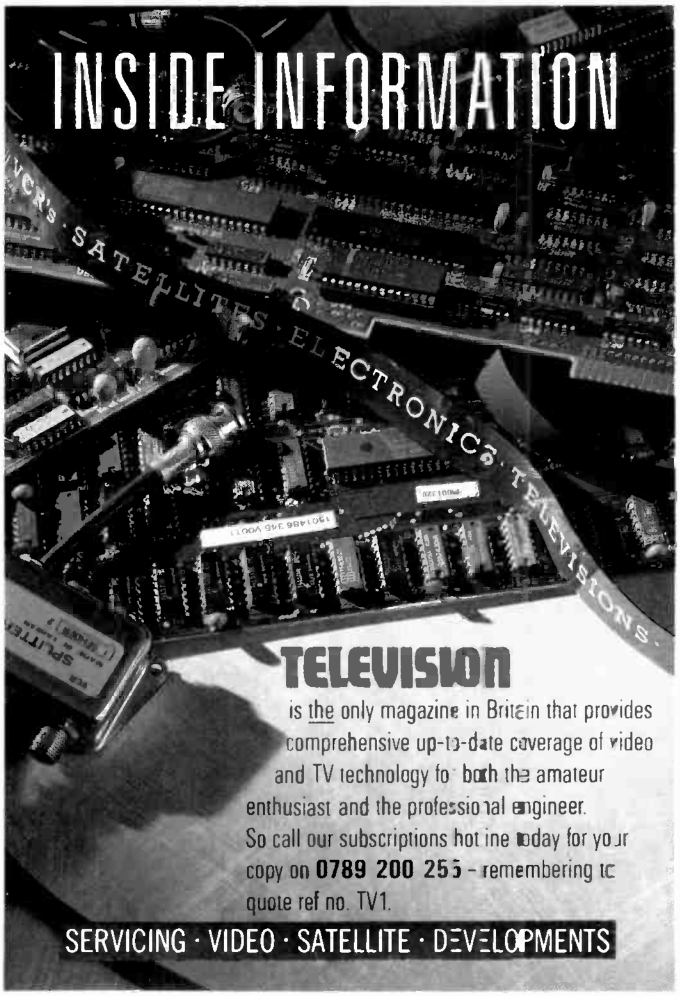
INSIDE INFORMATION
VCR's · SATELLITES · ELECTRONICS · TELEVISIONS ·

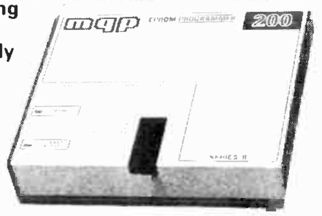
mqp
EPROM PROGRAMMER
200

controlled equipment? What are potential sources of RFI and how do you overcome them? Are there any good books on the subject? I have searched several bookshops but to no avail. Please help!
J Conners
Cambridge

Digital redundancy

I read Hot Carrier's White Noise ("A nation of project managers", *EW + WW*, July 1992) almost with a feeling of joy.

Recently redundant from my product support role I threw myself willingly onto the job market – but nothing. It is not the technology which has caused difficulties, just the word "digital". Engineers are forgetting that so many interconnecting systems are analogue. For now, I will fill my time with serious TV and international radio, both gloriously analogue systems, albeit under processor control.

But there are still all my old LPs. In *vinyl veritas*...
Robert Ellis
Derby

Brickwall filters...

I was intrigued by a promise of brickwall filters with no phase shift whilst reading David Grundy's "Structured analogue design builds perfect filters", (*EW + WW*, May 1992). But before enthusing about cad advantages of this type of filter, I would like a few fundamental questions answered about its operation.

In both type 1 and 2 filters, an initial step is to take the log of the signal. Since there is no such thing as the log of a negative number, presumably signals must be biased to be entirely positive. In itself that would not be a problem. But what happens when a log must be taken of double derivatives, which must take negative values? It is not so simple to add a DC offset because using logs to perform division means constants can not be forever added to variables without causing a major upset. Quite possibly there is a way around this, but Grundy does not allude to it.

Assuming it can be solved, what about the filter's dynamic range? Double derivatives of a signal rise in amplitude with the square of the frequency, giving rise to some fearsome scaling problems – especially when trying also to avoid a signal going negative.

At ten times the corner frequency, the signal at the log converter will be 100 times input level. It must be biased to avoid both clipping and negative values, so clearly there is an upper limit to frequency of operation and, as with sampled data filters, there must be some pre-filtering.

Simple filters with an order of 100 sound too good to be true. Please enlighten us so we can all use this novel technique.
Pete Seligman
Victoria
Australia

...interesting but...

Professor Grundy's "Structured analogue design builds perfect filters" was interesting to read but we are worried about implementation problems which appear to be fundamental to the method. On a positive note, we have verified his method works conceptually for a frequency varying tone, except at zero crossings where zero divided by zero is not defined.

In his Fig.1 there are problems with the algorithms portrayed:

●Sinusoidal input will assume negative, zero and positive values over each cycle of operation. Log processing blocks will also have a similar range of input values. Log of zero is minus infinity and there are two zero crossings per cycle. Log of a negative number is a complex number. How can processing cope with this problem?

●Differentiator blocks will act on any noise as well as intended signal. Rapid small level noise can have very large second derivatives! Outputs of a second differentiator could contain violent swings, upsetting subsequent processing. Its noise will severely affect output waveform.

●Let input consist of two sinusoids:

$$f(t)=a\cos(\omega_1 t)+b\cos(\omega_2 t)$$

Ignoring log and antilog operations, output (for $n=1$) is:

$$y(t)=f_2(t)/[(f(t)-f''(t)]$$

When $f(t)$ is put into equation:

$$y(t)=[a\cos(\omega_1 t)+b\cos(\omega_2 t)]^2/[a(1+\omega_1^2)\cos(\omega_1 t)+b(1+\omega_2^2)\cos(\omega_2 t)]$$

which is non-sinusoidal.

Hence the method is restricted to filtering of a single tone. Most signals applied to filters are more complicated than this type of input.
L F Hind & M J Hawksford
University of Essex

...not convincing

Professor Grundy answered all our questions (*EW + WW*, July 1992), concerning his zero phase shift filters with the skill of an experienced politician. Despite two independent proofs showing how incompatible his filter is with basic laws of physics, Grundy still persists in his unsubstantiated claims.

Please could he either publish a complete circuit for a simple filter of this type, so others can build and verify its operation, or admit his article was, as I suspect, a hoax.
John Yewen
Leighton Buzzard

Museum musings

Over the past sixty years my husband avidly collected wireless and television magazines and various sorts of radio and television equipment – one of the radios he repaired and brought home came from the Burmese jungle. But since his death earlier this year I have been trying to find a museum or individual who would be interested in taking over the collection.

Some of the journals are in good condition, others not so good. The first *Wireless World* in the collection dates from April 1927 and there is also a 1928 Vol 1 No 1 issue of *Television* – the world's first television journal.

Can anyone suggest what can be done with the collection?
Betty Owen
Gwent ■

Virtuous m-derived filter

In Tim Mason's Circuit Idea (*EW + WW*, July 1987) and J A H Edwards variation (*EW + WW*, April 1992), both contributors appear to be unaware of special virtues of an m-derived filter which meets exactly what is required with a sharp cut-off and stop-band null. I show a passive version here with computer derived values – but have made no attempt to juggle those more amenable values to make others fit off-the-shelf components. Any component designer will be able to do it and necessary equations are accessible in most textbooks (or I have a Basic program available that will do the job).

I am not averse to using a ferrite component for *L*; but for those who find the prospect daunting, a gyrator may be used. Because inductors are floating, two must be back to back and *R* (trimmed, if necessary) between outputs.

If a modest rise above null is objectionable, it can be attenuated with a simple first order passive *RC* network. For a highly practical application of these circuit technique please refer to my article "Variable slope, Low Pass Filter" (*EW + WW*, August 1990).
Reg Williamson
University of Keele
Staffordshire

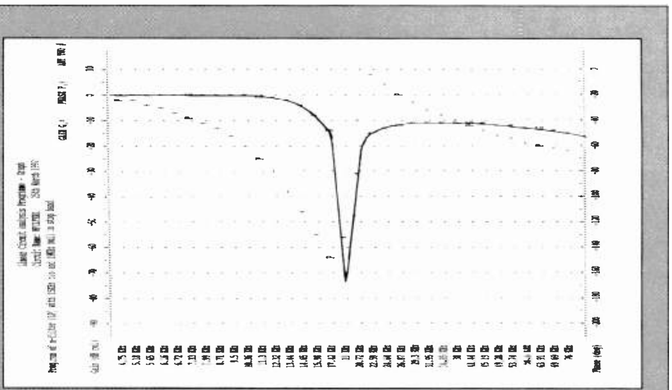

Linear circuit analysis.

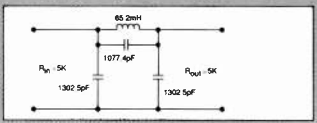

Full preferred π section LP filter

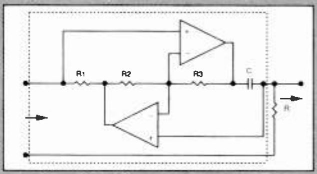

Gyrator module (due to Antoniou)

Full preferred π section LP filter (gyrator version)

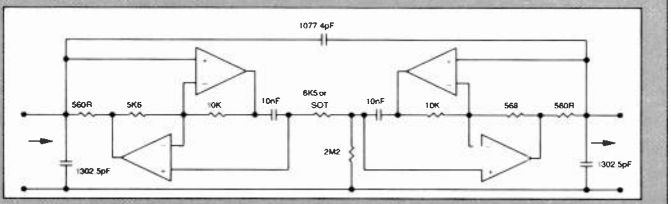

J. & M. Computers

Reliability DC-DC Power Source, 12½m 5V out 600MA out	£9.00 each
DS Connector 9→50 way male-female, all types	from 20p each to 60p each
24V Fans, 18V Fans	from £1.75 each
Hitachi LMO87LN, LMO32LN Displays	£6.50 each
Cable Ribbon, Multi-way Coax	On Request
Connectors, Coax 75a Type 43 & B37AT JO12X, many others	from £1.00 each
E. Prom 2764A-200 N/S, E. Prom 27128-200, E. Prom 27C256-2-OPT, E. Prom 27C1001-20FX1, E. Prom 27C256-15	all at £2.30 each
8086-Z-P	£5.00
I.C. Sockets	Various
RF Attenuator 50a 6DB 250 Watt 1.59Hz	£150.00 each
BLW 50F, BLY 92C, BLW 60R, MHU 5222A, MRF 4921	all at £8.00 each
NE 27177-3B, FLCO53 WG109, FSX51 WF-141	all at £40.00 each
Battery, Varta CR2032 3V, 20mm round	£1.00 each
Duracell TR146X 8.4V, PP3 type	£1.00 each

FIBRE OPTIC TELECOMMUNICATION

CW Laser Devices
STC MS6189/AC Type TS 8079
Lasertron SS 4070/10 At 1.3mm and 1.5mm SS 4070
Laser Diode SN 50470 Type LTD-362E-80 SS 4070
STC Type PT 1609-19C6
Laser Diode SN DN 2957 Type LDT-362E-80 SS4070
HR 1103TR-B
PCD 0311-FC-A-B
Pin Diode MLS 1023/2
Microwave Tube Transmitting YA 1198/G REG
Travelling Wave Amplifier Type W4 MC 13A STC
Travelling Wave Amplifier Type KS-49 493-1 STC
NEC OD 9470B-1-2M-D

ALL NEW BOXED

TRANSISTORS & IC's

BD3535
PMS77C01NL
D780C-1
SFC2741M
ZTX750L
BC559
DS00269 MIL V/S
Photodiode detector
HR1103TR-B
PCD0311-FC-A-B
Crystal 4.416
Pin diode
ML61023/2

PPR300 10-3
CCS 272018-3
Resistor

Filter E 10.7 H
KTXD-18503D-7.200418MHz

ICN1KV
Type HPX613
HAX1035DACFDX

130 160V
Z084004VSC
Z84C4204PEC
Z84C4004PEC
Z7220A08VSC
Z8028010VSC
Z0853004PSC
Z8440ASIO
Z8430APS
Z8430AC-TC
Z80ACTC
N8821
SN84161N
T74LSI26B
HCDBAXAA143
SN74SI5W
T74LSI39BI
GD74HC175
GD74HC175
GD4053B
GD4518B
GD74HC153
GD74HC05
G7905CU
BD202
HEF404DBDI
HEF4023BD
HEF4021BPI
PC74HC368P
HEF400988P
NE5592N
PC74HC283F

PC74HC368P
MC1489
Z8028010VSC
Z84C4004PEC
Z84C4204PEC
Z84C4204PEC
Z0868112PSC
Z641800PSC
Z85308PE
Z0803006VSC
Z84C400ADEE
Z84C4404VEC
Z0841004PSC
Z0853606DSE
Z0844404VSC
Z0858106CSE
Z84C400CMB
Z0853004PSC
Z84C2004VSC
Z0853604CMB
Z8536ACEA
Z860312RSE
Z82KXRON
T74LS138BI
T1001GRHCT373
MC74AC174N
GD74HCT245
GD74HC125
HEF4028BP
HEF4028BP
HEF4028BP
AD75BILCWI
MX7547JN
GD74HC257
GD74LS393
GD74HCT245
AD7581JN
GD74HCT245
MX7538JN
MX7502JN
AD7537JCW
MAX131CPL
AD7538JCWG
ICI7614DCPA
GD7475393
ICL76140CPA
HCT373/T1001GR
GAL16U8-35HD
ICL76140CPA
MAX134CQH
14584BX819
MAX1232
MAX251
ESD938
GD4516B
GD74HC10

TC74HC20P
GD400IB
GD74HCT241
GGD4510B
GD4052B
GD74HC365
GD74LS393
GD74LS393
GD74HC283E
MC14070B
MC14070B
SN7400N
SN7400N
SN7400N
SN7400N
SP8650B
MC10141L
MC10174L
MC14070B
SN7406N
MC14070B
SN7406N
MC14070B
MEDL8434
TDA1060B
CD40103BE
SN74HC109N
MC14070B
MC14070BCL
MC14070B
2N2907A
BFX80
BXY71
BF421
MPAA92
IN5829
IRF610
BC557BT
BYV32
MC14070BCLD
MC34070BCLD
SM74LS390N
SN74AL500AN
M9112LP311N
SN74ALS27N
SN7406N
TLD60CD
MC14001BCL
MC14001BCL
MC14001BCL
MC14001BCL
MC14001BCPP
SB9124A
TDA1060B
SI91100J
MEDL8930I

TDA1060B
ILQ74L8946H
AM685DL
MC14015BCP
MCP3022
74LSO5N
FFPQ2907
H11AIL8918H
H11BIL8833H
ZN477E
FFXY9119
4W28V923
74F258APC
MX7524KN
SFH615-4
PC74HC20T
T74LS10BI
ICL7126CPL
M74HC20BI
LM748CN
M74HCOOB1
GD4731B
ICL7126CPL
T74LS139B1
LM748CN
2N2222
BC178C
2N2903
BCY71
2N2369A
BD165A
IRF640
IRF642
IRF630
MBR1035
BDX34A
2NREF025CI
L7905CV
IRF230
BR220-140
HA178L05
HA179L05
HA178L12
HA179L12
HA179L15
BDX62A
UA7915
L7905CV
BD952
M3E350
HA19216
HA19508A
TA7676P
HA11544
AR5836
PAL8L14AC

27C256-20N-H
P8049AH
DMP3000-001
TA7778P
LM339N
DICA
TA8611AN
LA3624
STA401A
S5D1196
SSC930
JC556
2SC930
25A1015-Y
2SC3000
S740GN
STB8912
DS3691N
VN2406L
F421
F420
C557
MPSA92
2N6519
C547
C337
C640
BC639
BXY95A
BFR37
BF5Z1A
BCY71
ZN1308
ZN1302
CV9790
BCY34A
ACY18
1ZN1309
CV7438
1AUGET895
1UGALY20
IUGACY17
BSY39
BFY18
ZN1986
BCY32
ML102M
LU308X
DS75452H
BF756
BCY40
2N5179
OC139/RO18
CV9507
BFY30
ADZX2
CCBX003

PRICES PLUS VAT & POSTAGE & PACKING

J. & M. COMPUTERS
EIGHT ACRES,
GT TOTHAM ROAD,
WICKHAM BISHOPS,
WITHAM, ESSEX.

Tel: (0621) 892701

Fax: (0621) 891414

CIRCLE NO. 140 ON REPLY CARD

BARGAINS – 12 New Ones This Month

SUPER MULTIMETER Ex British Telecom, this is a 19-range 20k o.p.v. top grade instrument, covers AC & DC voltages, current and resistance, very good condition, fully working and complete with leads **£8**, leather carrying case **£2** extra (batteries not included but readily available).

MULTI-CORE CABLES all with 8A 230V cores so suitable for disco and other special lighting effects. With earthable woven screen and thick pvc outer. 3-core, **30p** per metre, 16-core, **50p** per metre, 18-core, **80p** per metre, 25-core, **£1** metre and 36-core, **£1.50** per metre.

VARIAC an infinitely variable unit gives any voltage from 0–230 AC at ½A. Obviously an invaluable piece of equipment which should be in every workshop and probably would be except that the usual price for this is **£35** plus VAT. Now is your chance to buy one, brand new, at **£15** including VAT, Order Ref. 15P42B.

ULTRA THIN DRILLS Actually 0.3mm. To buy these regular costs a fortune. However, these are packed in half dozens and the price to you is **£1** per pack, Order Ref. 797B.

YOU CAN STAND ON IT! Made to house GPO telephone equipment, this box is extremely tough and would be ideal for keeping your small tools. Internal size approx. 10½" × 4½" × 6" high. These are complete with snap closure lip and shoulder-length carrying strap. Taken from used equipment but in good condition, price **£2**, Order Ref. 2P283B.

BUILD YOUR OWN NIGHT LIGHT, battery charger or any other gadget that you want to enclose in a plastic case and be able to plug into a 13A socket. We have two cases, one 3½" × 2¼" × 1¾" deep, **£1** each, Order Ref. 845. The other one is 2½" × 2¼" × 1¾" deep, 2 for **£1**, Order Ref. 565.

LIMITED SUPPLY ITEMS
are only described in our newsletter. Over 50 appear in our current issue. If you order something this month you will receive this and the next three issues posted to you free of charge.

SAFETY LEADS curly coil so they contract but don't hang down. Could easily save a child from being scaleded. 2-core, 5A, extends to 3m, **£1**, Order Ref. 846, 2-core, 13A, extends to 1m, **£1** each, Order Ref. 847, 3-core, 13A, extends to 3m, **£2** each, Order Ref. 2P290.

POWER SUPPLY WITH EXTRAS mains input is fused and filtered and the 12V dc output is voltage regulated. Intended for high-class equipment, this is mounted on a PCB and, also mounted on the board but easily removed, are 2 12V relays and a Piezo sounder. **£3**, Order Ref. 3P80B.

5V 2.5A POWER SUPPLY UNIT £5. Order Ref. 5P186.

ULTRASONIC TRANSDUCERS 2 metal cased units, one transmits, one receives. Built to operate around 40kHz. Price **£1.50** the pair, Order Ref. 1.5P/4.

100W MAINS TRANSFORMERS normal primaries 20–0–20 at 2.5A, or 30V at 3.5A, **£4**, Order Ref. 4P24. 40V at 2.5A, **£4**, Order Ref. 4P59. 50V at 2A, **£4**, Order Ref. 4P60.

PHILIPS 9" HIGH RESOLUTION MONITOR black & white in metal frame for easy mounting, brand new, still in maker's packing, offered at less than price of tube alone, only **£15**, Order Ref. 15P1.

16-CHARACTER 2-LINE DISPLAY screen size 85mm × 36mm, Alpha-numeric LCD dot matrix module with integral microprocessor made by Epson, their Ref. 16027AR, **£8, Order Ref. 8P48.**

INSULATION TESTER WITH MULTIMETER internally generates voltages which enable you to read insulation directly in megohms. The multimeter has four ranges. AC/DC volts, 3 ranges DC milliamps, 3 ranges resistance and 5 amp range. These instruments are ex British Telecom, but in very good condition, tested and guaranteed OK, probably cost at least £50 each, yours for only **£7.50**, with leads, carrying case £2 extra, Order Ref. 7.5P/4.

THIS MONTH'S SNIP
is a 6, 9 or 12V dc Japanese-made fan, this is approx. 93mm square, at 6V draws only 100mA. Brushless, so no parts to wear out, won't interfere with your computer. Price only **£4**, Order Ref. 4P65. Mains power supply unit to operate this at variable speeds so make it a good desk fan, only **£2**, Order Ref. 2P3.

MAINS 230V FAN best make "PAPST" 4½" square, metal blades, **£8**, Order Ref. 8P8.

2MW LASER Helium Neon by PHILIPS, full spec. **£30**, Order Ref. 30P1. Power supply for this in kit form with case is **£15** Order Ref. 15P16, or in larger case to house tube as well **£18**, Order Ref. 18P2. The larger unit, made up, tested and ready to use, complete with laser tube **£69**, Order Ref. 69P1.

⅓ HP 12V MOTOR – THE FAMOUS SINCLAIR C5 brand new, **£15**, Order Ref. 15P8.

SOLAR CHARGER holds 4 AA nicads and recharges these in 8 hours, in very neat plastic case, **£6**, Order Ref. 6P3.

FERRITE AERIAL ROD 8" Long × ⅜" diameter, made by Mullard. Complete with 2 coil formers. 2 for **£1**, Order Ref. 832B.

AIR SPACED TRIMMER CAPS 2–20 pf ideal for precision tuning UHF circuits, 4 for **£1**, Order Ref. 832B.

FIELD TELEPHONES just right for building sites, rallies, horse shows, etc., just join two by twin wire and you have two-way calling and talking and you can join into regular phone lines if you want to. Ex British Telecom in very good condition, powered by batteries (not included) complete with shoulder-slung carrying case, **£9.50**, Order Ref. 9.5P/2.

MAINS ISOLATION TRANSFORMER stops you getting "to earth" shocks. 230V in and 230V out. 150watt upright mounting, **£7.50**, Order Ref. 7.5P/5 and a 250W version is **£10**, Order Ref. 10P79.

MINI MONO AMP on PCB. Size 4" × 2" with front panel holding volume control and with spare hole for switch or tone control. Output is 4 watts into 4-ohm speaker using 12V or 1 watt into 8-ohm using 9V. Brand new and perfect, only **£1** each, Order Ref. 495.

JUST ARRIVED
a 5" 20W 4ohm, mid-range speaker, **£3**, Order Ref. 3P145 and a matching 4ohm 20W tweeter, **£1.50**, Order Ref. 1.5P9, also FM radio mike hand-held **£8.50**, Order Ref. 8.5P.

AMSTRAD POWER UNIT 13.5V at 1.9A encased and with leads and output plug, normal mains input **£6**, Order Ref. 6P23.

ATARI 64XE COMPUTER at 65K this is quite powerful, so suitable for home or business, unused and in perfect order but less PSU, only **£19.50**, Order Ref. 19.5P/5B.

80W MAINS TRANSFORMERS two available, good quality, both with normal primaries and upright mounting, one is 20V 4A, Order Ref. 3P106, the other 40V 2A, Order Ref. 3P107, only **£3** each.

PROJECT BOX size approx 8" × 4" × 4½" metal, sprayed grey, louvred ends for ventilation otherwise undrilled. Made for GPO so best quality, only **£3** each, Order Ref. 3P74.

12V SOLENOID has good ½" pull or could push if modified, size approx 1½" long by 1" square, **£1**, Order Ref. 232.

WATER VALVE 230V operated with hose connections, ideal for auto plant spray or would control air or gas into tanks etc, **£1** each, Order Ref. 370.

BUILDING YOUR OWN PSU, battery charger, night light, or any other gadget that you want to enclose in a plastic case and be able to plug into a 13A socket? We have two cases, one 3½" × 2¼" × 1¾" deep, **£1** each, Order Ref. 845. The other one is 2½" × 2¼" × 1¾" deep, 2 for **£1**, Order Ref. 565.

500V BRIDGE MEGGER developed for GPO technicians the Ohmeter 18B is the modern equivalent of the bridge megger. 9V battery operated, it incorporates a 500V generator for insulation testing and a null balance bridge for very accurate resistance measurement. Ex B.T. in quite good condition with data & tested. Yours for a fraction of original cost, **£45**, Order Ref. 45P2.

EXPERIMENTING WITH VALVES don't spend a fortune on a mains transformer, we can supply one with standard mains input and secs. of 250-0-250V at 75mA and 6.3V at 3A. **£5**, Order Ref. 5P167.

15W 8-OHM 8" SPEAKER & 3" TWEETER made for a discontinued high-quality music centre, gives real hi-fi, and only **£4** per pair, Order Ref. 4P57.

3V SOLAR PANEL price **£3**, Order Ref. 3P99B.

3-GANG .0005 MFD TUNING CONDENSER with slow-motion drive. Beautifully made by Jackson Brothers and current list price is probably around £20. Yours for **£5**, Order Ref. 5P189.

STEREO HEADPHONES extra lightweight with plug, **£2** each, Order Ref. 2P261.

BT TELEPHONE LEAD 3m long and with B.T. flat plug ideal to make extension for phone, fax, etc. 2 for **£1**, Order Ref. 552.

WATER PUMP very powerful with twin outlets, an ideal shower controller, mains operated, **£10**, Order Ref. 10P74. Also single-outlet pump. Order Ref. 10P88.

PROJECT BOX a first-class, Japanese two-part moulding size 95 × 66 × 23mm. Held together by 2 screws, takes a battery and a PCB and is ideal for many projects. To name just a few, the washer bottle monitor, the Quicktest and the model railway auto signal, described in September's issue of *Everyday Electronics*. This is nicely finished and very substantial. You get 2 for **£1**, Order Ref. 876.

HOLD IT MAGNETIC BASE embedded in a circular metal shallow disc, diameter approx. 65mm (2½"), is the most powerful magnet. We have yet to find anyone who can remove this with his fingers. Ideal for adding extra shelves inside a metal case or to glass without drilling. Its uses, in fact, are innumerable. Price **£2** each, Order Ref. 2P296.

AMSTRAD EXPANSION BUS BOARD – their part no. Z70901. Brand new. Just one IC is missing from its socket, contains a terrific quantity of very useful parts. There are 4×32-way edge connector sockets with gold-plated contacts, 7 crystals, over 40 ICs many of which are plug-in types. There are 5 microprocessors Japanese-made, 8 socket connectors with gold-plated pins and hundreds of other small parts. Yours for **£10**, Order Ref. 10P94.

WANT A SPARE 3" DISC DRIVE FOR YOUR AMSTRAD? We have, unused and believed OK, Amstrad 3" disc drives that are all complete except for front bezel. It shouldn't be too difficult to take the bezel off your old one and fit it to this. Price **£15** each, Order Ref. 15P45.

OPD DUAL MICRO DRIVE UNIT This is a twin unit, each unit having its own motor, record/playback head and PCB with all electronics. In addition to being a direct replacement in the OPD, this can also be used with the Spectrum or the QL. We have a copy of the procedure necessary and will gladly supply a photostat of this if you require it when you purchase the unit. The price is **£5**, Order Ref. 5P194.

12V 2A MAINS TRANSFORMER upright mounting with mounting clamp. Price **£1.50**, Order Ref. 1.5P8.

AM/FM RADIO CHASSIS with separate LCD module to display date and time. This is complete with loudspeaker and is mains-powered but is not cased and, as yet, we have no information on how to wire it up. So, if you want a challenge, here it is! By way of recompense we will give the first customer to send us the connection details a £25 credit voucher. The price of the AM/FM radio chassis with LCD module is **£3.50**. Order Ref. 3.5P5. All purchasers will receive connection details directly we have them.

2, 3 AND 4-WAY TERMINAL BLOCKS the usual grub screw types. Parcel containing a mixture of the 3 types, giving you 100 ways for **£1**, Order Ref. 875.

12/24V DC SOLENOID constructed so that it will push or pull, plunger is a combined rod and piston. With 24V is terrifically powerful but is still very good at 12V and, of course, with any intermediate voltage with increasing or decreasing power. It has all the normal uses of a solenoid and an extra one, if wired in series with a make and break, this could be a scribing tool for marking plastics and soft metals. We welcome other ideas and will give a £25 credit voucher for any used. Price **£1**, Order Ref. 877.

2M 3-CORE LEAD terminating with flat pin instrument socket, **£1**, Order Ref. 879. Ditto but with plug on the other end so that you could use this to extend an instrument lead. **£1.50**, Order Ref. 1.5P10. Ditto but with a single outlet. Same price and Order Ref. Please specify which one you require.

0–1mA FULL VISION PANEL METER 2¾" square, scaled 0–100 but scale easily removed for re-writing, **£1** each, Order Ref. 756.

Prices include VAT. Send cheque/postal order or ring and quote credit card number. Add £3 post and packing. Orders over £25 post free. You can order up to 9pm Monday to Friday on 0273 430380.

M & B ELECTRICAL SUPPLIES LTD
12 Boundary Road, Hove, Sussex BN3 4EH
Telephone (0273) 430380
Fax or phone (0273) 410142

Telephone Order Hotline Monday to Friday until 9.00pm on 0273-430380

CIRCLE NO. 141 ON REPLY CARD

Inverting audio amplifier

I have used this amplifier in many different audio applications and found it consistent, economical and offering wide bandwidth and high gain.

DC stability with temperature is good, the necessary voltage references being derived from the two diodes and their resistors. All DC settings are easily carried out and are almost independent: v_{out} is set by Tr_1 bias resistors; cascode current by R_4; and output stage current by R_5. Values in the diagram give V_{REF2} = -3V, V_{DCout} = -15.5V, I_1 = 0.4mA and I_4 = 8mA.

Open-loop gain is 4000 at 1kHz, falling to 2500 at 16kHz and 55 at 1MHz. Capacitor C_2 maintains stability with feedback down to gains of less than 1. The low-impedance output stage provides 8V RMS at a slewing rate of 20V/µs.

For the input transistor, a low-noise p-n-p type will give an equivalent unweighted input noise amplitude of 0.35µV from 20Hz to 20kHz, with a source impedance of 100Ω.

Open-loop distortion on a 5V RMS output is less than 0.8% over the audio band, feedback to give a gain of 5 producing a typical THD of 0.0028% at 1kHz.

As it stands, the amplifier's input impedance is low (from 15kΩ to 50kΩ, depending on frequency) and the two electrolytics are unfortunately needed. If the amplifier is used as the second stage of a fet-input differential amplifier, these problems are reduced

Vladimir Katkov
Priluki
Ukraine

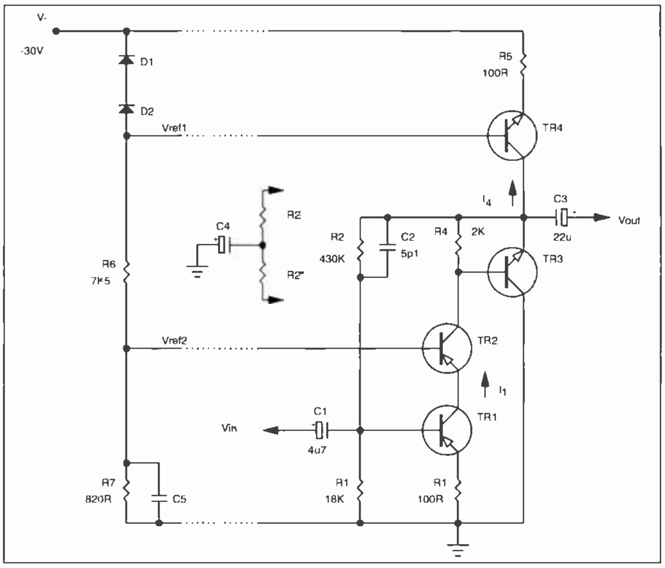

Audio amplifier offering high gain, wide bandwidth and economy, meant for use in mixers, tone controls, filters, equalisers and other 20Hz-20kHz applications. It is useful as the gain stage in a fet-input differential arrangement.

Analogue A-to-D converter

This essentially analogue circuit will convert a 0-4V analogue input to a 4-bit digital output. Several such stages are cascadable and each uses a quad comparator, a quad op-amp and a *4066* quad bilateral switch.

If V_{in} exceeds $V_{ref(1)}$, the comparator output is 1 and forms the most-significant bit. V_x, which is the difference amplifier output V_{in}-$V_{ref(1)}$, is fed to the next stage to be compared in the same way with $V_{ref(2)}$. If V_{in} is less than $V_{ref(1)}$, the comparator output is 0 and V_{in} is switched straight to the next stage by the multiplexer. Only two stages are shown; the other two are identical.

The circuit finds application in a-law[1] and µ-law[2] companding.

Haydar Bilhan
EMT Electronics
Ankara
Turkey

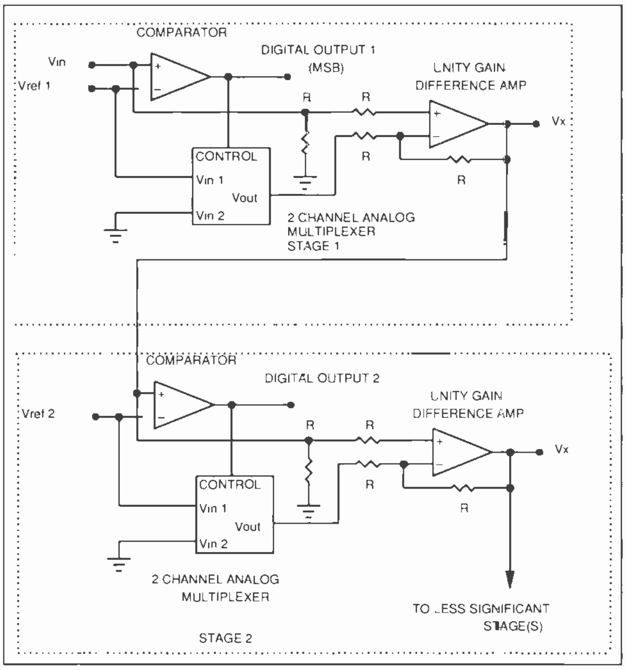

Four-bit D-to-A converter using common analogue components. Stages are cascadable.

References

µ-law
1. Smith, B., *Instantaneous companding of quantised signals*, BSTJ 36, May 1957.

A-law
2. Cattermole, K.W., *Principles of pulse-code modulation*, Iliffe, 1969.

Fast, full - wave rectifier

Precision rectifiers using op-amps with feedback diodes perform extremely well, except where speed is concerned, bandwidth and slew rate being limiting factors. This circuit overcomes the speed barrier.

Transistor Q_1 is a common-emitter amplifier and Q_2 is connected in common-base configuration, so that each half-cycle of input draws current through R_7. The result is a full-wave rectifier. $R_{1,2,3}$ and $R_{5,6}$ define emitter currents and $C_{1,2}$ speed up the action.

With R_7 at 1.8kΩ, output is 50% input, the -3dB point occurring beyond 2MHz. If a milliammeter is used in parallel with a 560Ω resistor (R_{7a}) and a 100nF smoother, a ±5V sine input gives 50% FSD meter deflection with a response past 20MHz. Non-linearity at 100kHz is less than 5% FSD on the meter.

C J D Catto
Elsworth
Cambridgeshire

Precision rectifier compares in accuracy with the op-amp/diode variety and exhibits a 2MHz bandwidth.

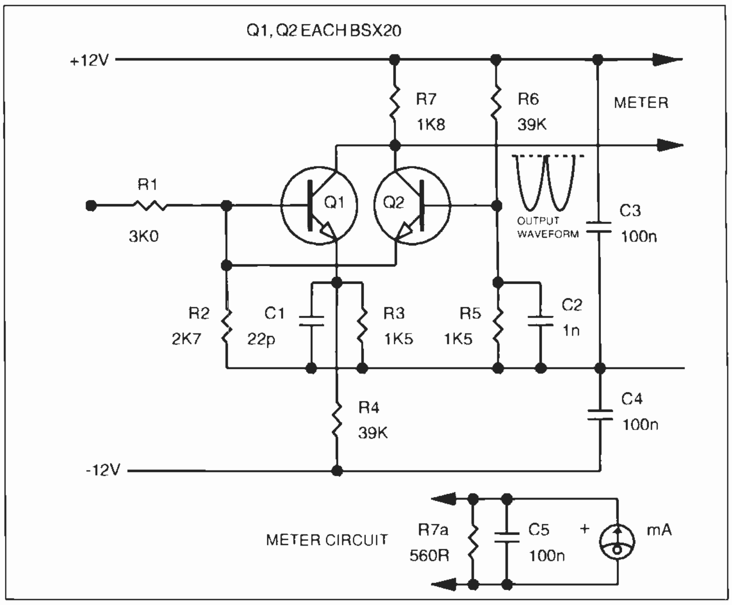

Metal detector

If the VCO output in a phase-locked loop is phase shifted and taken back to the input, the loop locks to itself and runs at whichever frequency causes 90° phase shift in the network. This principle is used to make a metal detector here, but has many applications in measurement systems.

When the search coil is within 75cm of a metal object, the VCO increases its frequency for a non-ferrous metal and decreases it for ferrous objects. Loop output on pin 7 of the *565* is compared with the pin 6 reference voltage, the long-tailed pair $Tr_{1,2}$ amplifying the difference.

My search coil is 50 turns on 50mm diameter to give an inductance of 0.5mH. The VCO frequency is around 1kHz.

Kamil Kraus
Rokycany
Czechoslovakia

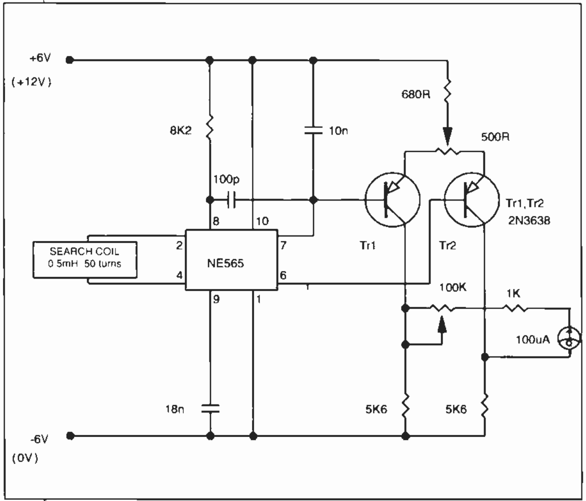

Simple metal detector using a PLL locked to itself. Search distance is about 75cm.

1:1 square waves with 2ns edges

With a bit of care in layout, this square-wave generator will produce accurate 5V output of 50% duty cycle at 1MHz or 1kHz with transition times of less than 2ns.

It is composed of an emitter-coupled Schmitt-trigger oscillator, $T_{1,2,3}$, its RC feedback components being R and C_1 or C_2, switched for 1MHz or 1kHz. The fast rise time and accurate level control are the responsibility of the two UHF transistors, which form a current-mode switch. Low-tolerance, metal-film resistors and adjustable IC regulators for the 5V and -6.9V supplies supply the accuracy to within 1%.

To calibrate the oscillator, first adjust the 5V. Connecting T_2 base to negative by 100Ω stops oscillation and turns T_5 on; adjust the -6.9V to obtain 0V at the output. Disconnect the 100Ω resistor and set P for 50% duty cycle on an oscilloscope. Using a frequency counter, select $C_{1,2}$ for 1MHz and 1kHz. Output should be 5V into 1MΩ and 2.5V into 50Ω.

Use a ground plane and bypass the supplies close to the output stage; keep leads very short.

Thomas Korte
Hanover
Germany

Very fast square-wave generator, with accurate levels and duty cycle, produces 2ns transition times. Use IC regulators for both supplies.

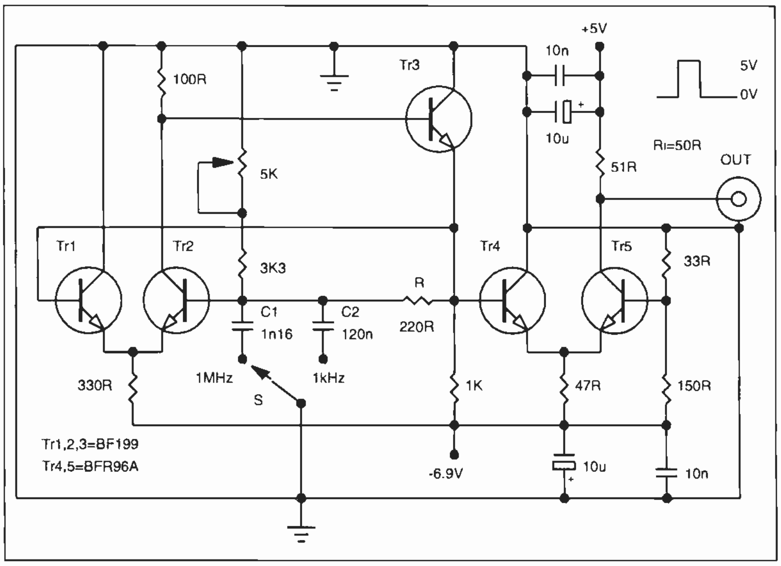

Gated oscillator ignores input noise

Using a cmos 74AHCT132 quad two-input schmidt trigger nand gate array, this oscillator will not respond to enable signals of less than a certain width: neither will it emit a partial pulse when the enable signal is removed during an output low. Furthermore, the duration of all low levels is identical – even the first one after the enable starts.

One of the nands, U_{1B}, with C_1 and R_1, forms a gated oscillator, its frequency depending on R_1C_1. Another nand, U_{1A}, controls the oscillator and is an external latched gate element using feedback from the oscillator. Diode D_1 holds C_1 low when an enable high is present.

A low enable starts the oscillator. Initially, C_1 is high to hold the enable signal but, if enable goes high again before T_{min} has elapsed, the capacitor goes low, all its charge being removed. Narrow "enable" pulses are therefore ignored.

M Railesha
World Friends Design Group
Tamilnadu, India

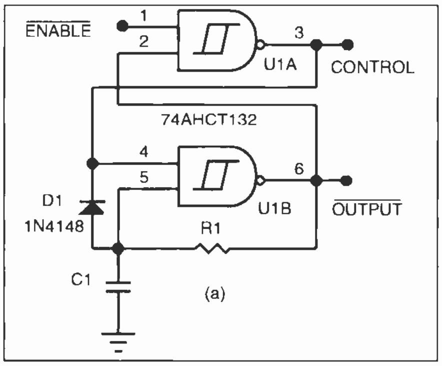

Novel gated oscillator is invulnerable to short enable signals, such as noise spikes and emits constant-duration lows.

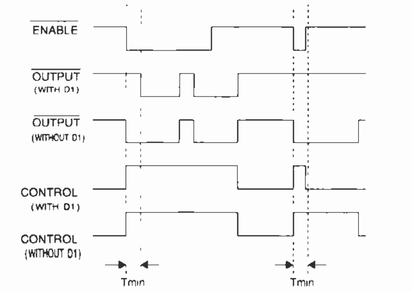

Gated oscillator with input noise rejection: input enable pulses shorter than T_{min} will not start the oscillator.

RC attenuator distortion

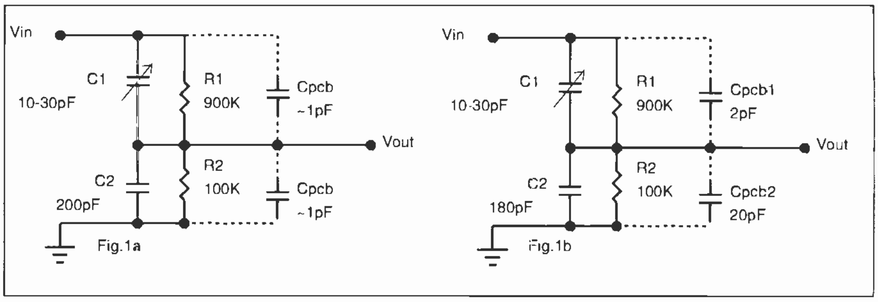

Fig.1. At (a), a typical 1MΩ, 10:1 RC attenuator, showing PCB strays, which are not constant with frequency and introduce a "hook" in a step function. Circuit at (b) is a complete cure; artificial "strays" in proportion to attenuation introduce impedance changes in each branch that compensate each other. Trim the two additional Cs and then adjust C_1 for an ideal response.

Figure 1(a) is a typical 10:1, 1MΩ wide-band attenuator, often used in signal generators, millivoltmeters and oscilloscopes. It is compensated by C_1 and C_2, so that $R_1/R_2 = C_1/C_2$ (neglecting C_{pcb}), and attenuation ought to be constant for all input frequencies, depending on source impedance and input capacitance. Unfortunately, one cannot neglect C_{pcb}, particularly since it is not constant with frequency and cannot therefore be cancelled by adjustment of C_1. Special PCB materials can be used which do have constant electrical properties, but they are expensive.

A step function passed through the attenuator exhibits the effect seen in **Fig.2**, which shows what happens with adjustment of C_1; the "hook" is ever-present, regardless of C_1 setting and makes its presence felt mainly in the 10-200kHz band with the values shown in Fig.1. Its amplitude is roughly $C_{pcb}/(C_{pcb} + C_1)$.

Using a ground plane around the output is not totally effective, since C_2 now has a great deal more capacitance to contend with. Instead, my solution is to make a pair of "deliberate strays", C_{pcb1} and C_{pcb2} in **Fig.1(b)**, using pads on both sides of the board with areas in proportion to the desired attenuation. Trimming the pads to exact size by drilling small holes allows complete cancellation of the hook. **Figure 3** gives a suggested layout.

Erik Margan
Ljubljana
Slovenia

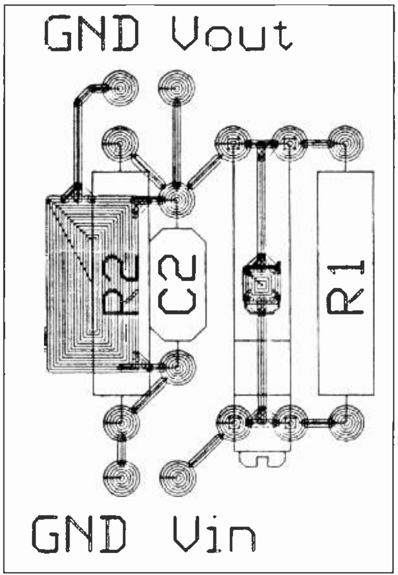

Fig.3. Suggested board layout of Fig.1(b) circuit. The track area is in the ratio of C_1 to C_2.

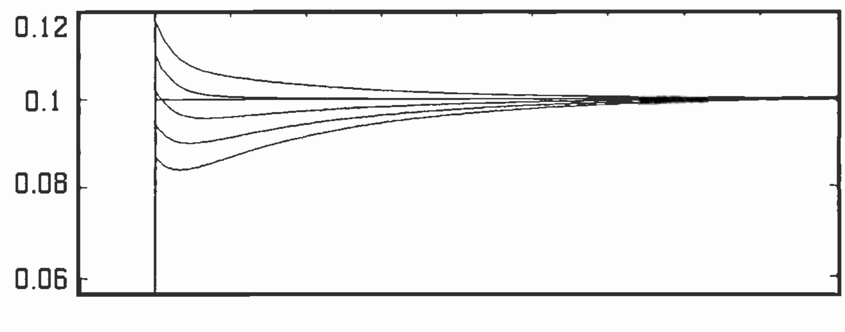

Fig.2. Without the two additional pads, this is the attenuator response to a step function. Whatever the setting of C_1, the hook in the response stays due to dielectric adsorption.

Surplus always wanted for cash!

THE *ORIGINAL* SURPLUS WONDERLAND!

Surplus always wanted for cash!

COMPUTER *SCOOPS*

PC-AT 386 20-DX FULLY LOADED FOR £499!

- 20 Mhz DX processor
- 2 megs RAM. Exp 10 meg
- 40 meg hard drive
- 1.2 meg 5-1/4" floppy
- 32K cache exp. 64K
- Installed VGA card
- Enhanced 102 key k/board
- Complete with MS-DOS 3.3
- 2 serial 1 parallel ports
- 8 free slots- 6 off 16 bit!

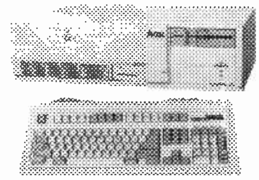

The MP386 quality made by Mitsubishi to last a lifetime! Brand new with all manuals and software plus Super PC-Quick Disk Accelerator for lightning disk access. Only............. **£499** (F)

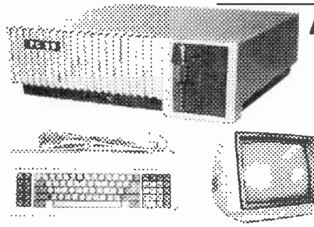

A COMPLETE IBM PC COMPAT SYSTEM FOR ONLY £99!!

Just plug in and go - fully expandable - the **Display PC-99!** System supplied complete with 12" mono monitor, 84 key keyboard, 360k 5-1/4" floppy disk drive, 128K RAM, 2 serial and 1 parallel port plus DOS with manual. Many other features include 7 slot backplane, all metal case, 150 watt PSU and US made motherboard. In very good used condition with 90 day guarantee. At the unique price of:

Optional FITTED extras: 256K RAM £15; 640K RAM £39. 12" CGA colour monitor with card £89. 2nd 5-1/4" 720K floppy (or 360K if preferred) £29.95. 20 mbyte hard drive £99.

£99 (E)

FLOPPY DISK DRIVES

5¼" from £22.95 - 3½" from £21.95!

Massive purchases of standard 5¼" and 3½" drives enables us to present prime product at industry beating low prices! All units (unless stated) are removed from often brand new equipment and are fully tested, aligned and shipped to you with a 90 day guarantee and operate from standard voltages and are of standard size. **All are IBM-PC compatible** (if 3½" supported).

3.5" **Panasonic** JU364 720K*	**£21.95**(B)
3.5" **Mitsubishi** MF353C-L. 1.4 Meg. Laptops only*	**£29.95**(B)
3.5" **Mitsubishi** MF353C-D. 1.4 Meg. Non laptop*	**£29.95**(B)
5.25" **Teac** FD-55(36). 360K half height.	**£22.95**(B)
5.25" **Teac** FD-55(72). 720K half height.	**£24.95**(B)

* **Data cable included in price.**

Shugart 800/801 SS refurbished & tested	**£175.00**(E)
Shugart 851 double sided refurbished & tested	**£275.00**(E)
Mitsubishi M2894-63 double sided switchable hard or soft sectors- BRAND NEW	**£250.00**(E)

Dual 8" drives with 2 mbyte capacity housed in a smart case with built in power supply! Ideal as exterior drives! **£499.00**(F)

End of line purchase scoop! Brand new **NEC D2246** 8" 85 megabyte of hard disk storage! Full CPU control and industry standard SMD interface. Ultra hi speed transfer and access time leaves the good old ST506 interface standing. In mint condition and comes complete with manual. Only........................**£299**(E)

THE *AMAZING* TELEBOX!

Converts your colour monitor into a QUALITY COLOUR TV!!

TV SOUND & VIDEO TUNER!

The TELEBOX consists of an attractive fully cased mains powered unit, containing all electronics ready to plug into a host of video monitors made by manufacturers such as MICROVITEC, ATARI, SANYO, SONY, COMMODORE, PHILIPS, TATUNG, AMSTRAD and many more. The composite video output will also plug directly into most video recorders, allowing reception of TV channels not normally receivable on most television receivers (TELEBOX MB). Push button controls on the front panel allow reception of 8 fully tuneable 'off air' UHF colour television or video channels. TELEBOX MB covers virtually all television frequencies VHF and UHF including the HYPERBAND as used by most cable TV operators. Composite and RGB video outputs are located on the rear panel for direct connection to most makes of monitor. For complete compatibility - even for monitors without sound - an integral 4 watt audio amplifier and low level Hi Fi audio output are provided as standard.

Telebox ST	for composite video input monitors	**£32.95**
Telebox STL	as ST but with integral speaker	**£36.50**
Telebox MB	as ST with Multiband tuner VHF-UHF-Cable. & hyperband For overseas PAL versions state 5.5 or 6mhz sound specification.	**£69.95**
Telebox RGB	for analogue RGB monitors (15khz)	**£69.95**

Shipping code on all Teleboxes is (B)

RGB Telebox also suitable for IBM multisync monitors with RGB analog and composite sync. Overseas versions VHF & UHF call. SECAM / NTSC not available.

No Break Uninterruptable PSU's

Brand new and boxed 230 volts uninterruptable power supplies from **Densei**. Model MUK 0565-AUAF is 0.5 kva and MUD 1085-AHBH is 1 kva. Both have sealed lead acid batteries. MUK are internal, MUD has them in a matching case. Times from interrupt are 5 and 15 minutes respectively. Complete with full operation manuals...........**MUK......£249** (F) **MUD......£525** (G)

POWER SUPPLIES

Power One SPL200-5200P 200 watt (250 w peak).Semi open frame giving +5v 35a, -5v 1.5a, +12v 4a (8a peak), -12v 1.5a, +24v 4a (6a peak). All outputs fully regulated with over voltage protection on the +5v output. AC input selectable for 110/240 vac. Dims13" x 5" x 2.5". Fully guaranteed RFE. **£85.00** (B)

Power One SPL130. 130 watts. Selectable for 12v (4A) or 24 v (2A). 5v @ 20A. ± 12v @ 1.5A. Switch mode. New. **£59.95**(B)

Astec AC-8151 40 watts. Switch mode. +5v @ 2.5a. +12v @ 2a. -12v @ 0.1a. 6-1/4" x 4" x 1-3/4".New **£22.95**(B)

Greendale 19AB0E 60 watts switch mode.+5v @ 6a,±12v @ 1a,+15v @ 1a. RFE and fully tested.11 x 20 x5.5cms. **£24.95**(C)

Conver AC130. 130 watt hi-grade VDE spec.Switch mode.+5v @ 15a,-5v @ 1a,±12v @ 6a.27 x 12.5 x 6.5cms.New. **£49.95**(C)

Boshert 13090.Switch mode.Ideal for drives & system. +5v@ 6a, +12v @ 2.5a, -12v @ 0.5a, -5v @ 0.5a. **£29.95**(B)

Farnell G6/40A. Switch mode. 5v @ 40a.Encased **£95.00**(C)

Farnell G24/5S. As above but 24v @ 5a. **£65.00**(C)

BBC Model B APM Board

WIN £100 CASH!

£100 CASH FOR THE MOST NOVEL DEMONSTRATABLE APPLICATION!

BBC Model B type computer on a board. A major purchase allows us to offer you the **PROFESSIONAL** version of the BBC computer at a parts only price. Used as a front end graphics system on large networked systems the architecture of the BBC board has so many similarities to the regular BBC model B that we are sure that with a bit of experimentation and ingenuity many useful applications will be found for this board!! It is supplied complete with a connector panel which brings all the I/O to 'D' and BNC type connectors - all you have to do is provide +5 and ± 12 v DC. The APM consists of a single PCB with most major ic's socketed. The ic's are too numerous to list but include a 6502, RAM and an SAA5050 teletext chip. Three 27128 EPROMS contain the custom operating system on which we have no data. On application of DC power the system boots and provides diagnostic information on the video output. On board DIP switches and jumpers select the ECONET address and enable the four extra EPROM sockets for user software. Appx. dims: main board 13" x 10". I/O board 14" x 3". Supplied tested with circuit diagram, data and competition entry form.

Only £29.95 or 2 for £53 (B)

SPECIAL INTEREST

Trio 0-18 vdc bench PSU. 30 amps. New	£ 470
Fujitsu M3041 600 LPM band printer	£2950
DEC LS/02 CPU board	£ 150
Rhode & Schwarz SBUF TV test transmitter 25-1000mhz. Complete with SBTF2 Modulator	£6500
Calcomp 1036 large drum 3 pen plotter	£ 650
Thurlby LA 160B logic analyser	£ 375
1.5kw 115v 60hz power source	£ 950
Anton Pillar 400 Hz 3 phase frequency converter 75Kw	POA
Newton Derby 400 Hz 70 Kw converter	POA
ADDS 2020 VDU terminals - **brand new**	£ 225
Sekonic SD 150H 18 channel Hybrid recorder	£2000
HP 7580A A1 8 pen high speed drum plotter	£1850
Kenwood DA-3501 CD tester, laser pickup simulator	£ 350

BRAND NEW PRINTERS

Microline 183. NLQ 17x17 dot matrix. Full width.	£139 (D)
Hyundai HDP-920. NLQ 24x18 dot matrix full width.	£149 (D)
Qume LetterPro 20 daisy. Qume QS-3 interface.	£39.95 (D)
Centronics 152-2 9 x 7 dot matrix. Full width.	£149 (D)
Centronics 159-4 9 x 7 dot matrix.Serial. 9-1/2" width	£ 99 (D)

MONITORS

MONOCHROME MONITORS

THIS MONTH'S SPECIAL!

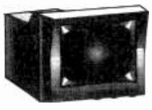

There has never been a deal like this one! **Brand spanking new & boxed** monitors from NEC, normally selling at about £140! These are over-engineered for ultra reliability. 9" green screen composite input with etched non-glare screen plus switchable high/low impedance input and output for daisy-chaining. 3 front controls and 6 at rear. Standard BNC sockets. Beautiful high contrast screen and attractive case with carrying ledge. Perfect as a main or backup monitor and for quantity users! **£39.95 each** (D) **or 5 for £185**(G)

COLOUR MONITORS

HI-DEFINITION COLOUR MONITORS

SAVE £59 - ONLY £100 WHEN BOUGHT WITH THE 386 ABOVE!

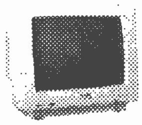

14" Philips Model CM8873 VGA multisync all the way up to 34Khz with 640 x 480 resolution. This one has everything! Two switches enable you to select CGA, EGA or VGA and digital/analog. Unusual for a professional monitor, sound is also provided, with a volume control. There is also a special "Text" switch for word processing, spreadsheets and the like. Compatible with virtually all computers including IBM PC's, Amiga, Atari, BBC, Archimedes etc. Good used condition (possible minor screen burns) 90 day guarantee. 15" x 14" x 12". Only....................................**£159**(E)

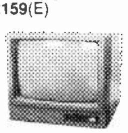

KME 12" high definition colour monitors. Nice tight 0.28" dot pitch for superb clarity and modern two tone plastic styling. Operates from any 15.625 khz sync RGB video source, with RGB analog and composite sync such as Atari, Commodore Amiga, Acorn Archimedes & BBC. Measures only 13.5" x 12" x 11". Also functions as quality TV with our RGB Telebox. Excellent used condition with 90 day guarantee. In nice two tone beige and brown case. Only ....**£149** (E)

Brand new Centronic 14" monitor for IBM PC and compatibles at a lower than ever price! Completely CGA equivalent. Hi-res Mitsubishi 0.42 dot pitch giving 669 x 507 pixels. Big 28 Mhz bandwidth. A super monitor in attractive style moulded case.Full 90 day guarantee. Only .... **£129** (E)

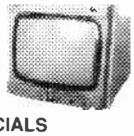

NEC CGA 12" IBM-PC compatible. High quality ex-equipment fully tested with a 90 day guarantee. In an attractive two tone ribbed grey plastic case measuring 15"L x 13"W x 12"H. The front cosmetic bezel has been removed for contractual reasons. Only.......... **£79** (E)

20", 22" and 26" AV SPECIALS

Superbly made UK manufacture. PIL all solid state colour monitors, complete with composite video & sound inputs. Attractive teak style case. Perfect for Schools,Shops,Disco, Clubs. In EXCELLENT little used condition with full 90 day guarantee.

20"....£135 22"....£155 26"....£185

CALL FOR PRICING ON NTSC VERSIONS! (F)

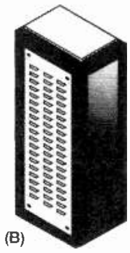

Superb Quality 6 foot 40u 19" Rack Cabinets

Massive Reductions

Virtually New, Ultra Smart!

Less Than Half Price!

Top quality 19" rack cabinets made in UK by Optima Enclosures Ltd. Units feature designer, smoked acrylic lockable front door, full height lockable half louvered back door and removable side panels. Fully adjustable internal fixing struts, ready punched for any configuration of equipment mounting plus ready mounted integral 12 way 13 amp socket switched mains distribution strip make these racks some of the most versatile we have ever sold. Racks may be stacked side by side and therefore require only two side panels or stand singly. Overall dimensions are 77-1/2"H x 32-1/2"D x 22"W. Order as:

Rack 1 Complete with removable side panels.......**£275.00** (G)
Rack 2 Less side panels ....**£145.00** (G)

COOLING FANS

3 inch	AC. 1½" thick	**£ 8.50**(B)
92 mm	AC 230 v. 18mm thick	**£12.95**(B)
3½ inch	AC ETRI slimline.Only 1" thick.	**£ 9.95**(B)
3½ inch	AC 230 v 8 watts. Only 3/4" thick	**£12.95**(A)
4 inch	AC 110/240v 1½" thick.	**£10.95**(B)
10 inch	AC round. 3½ thick. Rotron 110v	**£10.95**(B)
10 inch	As above but 230 volts	**£24.95**(B)
60 mm	DC 1" thick.No.812 for 6/12v.814 24v.	**£15.95**(A)
80 mm	DC **5 v.** Papst 8105G 4w. 38mm. RFE.	**£19.95**(A)
92 mm	DC 12v. 18 mm thick.	**£14.95**(A)
4 inch	DC 12v. 12w 1½" thick	**£12.50**(B)
4 inch	DC 24v 8w. 1" thick.	**£14.50**(B)

1992 Summer Issue of *Display News* now available - send large SAE - PACKED with bargains!

DISPLAY -ELECTRONICS-

MAIL ORDER & OFFICES
Open Mon-Fri 9.00-5.30
Dept EL, 32 Biggin Way,
Upper Norwood,
London SE19 3XF.

LONDON SHOP
Open Mon-Sat 9-5.30
Thursday till 9.00pm
215 Whitehorse Lane,
South Norwood,
London, SE25.

DISTEL © The Original
Free dial-up database!
1000's of items+info On Line
V21, V22 & V22 bis
081-679-1888

ALL ENQUIRIES
081-679-4414
Fax- 081-679-1927

Visa

All prices for UK Mainland UK customers add 17.5% VAT to TOTAL order amount. Minimum order £10. PO orders from Government,Universities,Schools & Local Authorities welcome-minimum account order £30. Carriage charges (A)=£2.00. (A1)=£3.75. (B)=£5.50. (C)=£8.50 (D)=£11.50 (E)=£14.00 (F)=£18.00 (G)=Call . Scotland surcharge: call. All goods supplied subject to our standard Conditions of Sale and unless otherwise stated guaranteed for 90 days All guarantees on a return to base basis.Rights reserved to change prices & specifications without prior notice. Orders subject to stock. Quotations willingly given for higher quantities than those stated. Bulk surplus always wanted for cash.

CIRCLE NO. 142 ON REPLY CARD

ACTIVE

Asics

20,000-gate FPGA. AT&T's new field-programmable gate array, optimised reconfigurable cell array (orca) allows automatic routeing of 100% of all designs with 75% gate utilisation. Orca doubles the attainable density of srams and increases datapath and random logic densities by 60% and 50%. Nibble-wide logic and internal connections lend increased flexibility, each cell being usable in four functions. A set of design tools takes into account gate utilisation, timing and routability, and circuit changes do not need an entire reworking of the circuit. AT&T Microelectronics, 0732 460424.

GaAs VLSI. Vitesse Semiconductor's range of digital VLSI products in gallium arsenide is to be handled in the UK by Hawke. Prices are to be typical of silicon devices but with a price/performance ratio equal to bicmos. Range includes gate arrays, standard cells, telecomms products and memories. Hawke Components Ltd, 0256 880800.

0.45µm cmos asics. Gate arrays, Embedded arrays and cell-based asics in 0.6µm (as drawn), 0.45µm (effective) cmos are announced by LSI Logic. Its process is said to offer the smallest feature size of any asic or microprocessor process below 0.65µm. The 300K chips offer up to 600,000 usable gates and over 800 i/o. On-chip phase-locked loops eliminate chip-to-chip skewing for clocks up to 160MHz. LSI Logic, 071-497 8728.

Gate arrays. Asics from Texas using an 0.8µm cmos technology, *TGC1000LV* and *TGC1000*, are optimised for low voltage and power requirements and provide up to 455,000 gates with 70% utilisation. Dissipation is 0.8µW/MHz/gate; the LV version achieves up to three times battery life of 5V versions. These arrays interface with 3V and 5V systems, their macros accepting 5V signals when powered by 3V. Texas Instruments, 0234 223252.

A-to-D & D-to-A converters

Low-power A-to-D. Linear says its *LTC1096* is the industry's first micropower sampling A-to-D converter to be packed in an 8-pin SO package. Current draw is proportional to sample rate: less than 100µA at its maximum of 33kHz, 3µA at 1kHz and 300nA at 100Hz. It operates on a supply of 3-9V and reduces current to 1nA between conversions; at a sampling rate of 1kHz, it will work for five years on a 3V lithium coin cell. On-chip S/H has a 50kHz full-accuracy bandwidth and its three-wire serial interface connects to most microprocessor serial ports. Input span of less than 1V eliminates need for amplification between sensors and A-to-D in many cases. Linear Technology (UK) Ltd, 0276 677676.

±18bit A-to-D converter. Maxim's *Max132* is a multi-slope integrating A-to-D converter giving 100 conversions per second and needing only 60µA. An input of ±500mV can be resolved to within 2µV with no input amplification. A sleep mode cuts current supply to 1µA. The device's four-wire interface (clock, data in/out, end-of-convert) reduces board space and cost of isolation. Four binary outputs control a front-end mux or PGA from within the serial data stream. Maxim Integrated Products UK, 0734 845255.

Discrete active devices

1.8GHz power. Philips's *LZ1418E100R* class A high-power transistor has a 1.4-1.8GHz range and is meant chiefly for broad-band continuous power circuitry. It offers load power of 9mW for 1dB compressed power gain and has a typical low power gain of 10dB. Collector voltage and current are 16V and 2A. Package is FO57C with large flanges for heat transfer, but the device is also available as a chip. Anglia Microwaves Ltd, 0277 630000.

Gunn diodes. X-band Gunn diodes from Alpha Industries, working on 8V DC, are available in 10mW, 20mW and 30mW versions, while their K-band devices produce 5mW, 10mW and 20mW from 5V DC. Both ranges are mounted in a standard anode heat-sink package, although other packages and operating bands are available. Cirkit Distribution Ltd, 0992 444111.

Microwave hemts. Sony offers a high electron mobility transistor, the *SGH5712F*, with a noise figure of 0.7dB and a 12GHz gain of 11dB. It is an AGaAs/GaAs n-channel device, meant for satellite reception, DSP and telecomms. Sony Components & Peripherals, 0784 466660.

Linear integrated circuits

Low-power PLLs. *MB1503/1513* from Fujitsu are power-saving frequency synthesisers meant for mobile telephone work. They are phase-locked loops and prescalers in one, work at 1.1GHz and incorporate a standby mode, in which current consumption is 100µA (8mA while active). An intermittent mode of operation eliminates difficulties caused by switching circuits off and still saves the power. Fujitsu Microelectronics Ltd, 0628 76100.

CCDs. Top of the new Panasonic range of charge-coupled devices, the *MN3727* is a 1/3in, 360,000-pixel, interline transfer, area image sensor having a minimum object illumination of 3lux. Panasonic also have linear devices with a current leader offering 7,500 pixels, which will shortly be superseded by a 10,000-pixel type. Panasonic, 0344 353304.

Fast battery charging. Battery charging in 30 minutes is offered by a range of six ICs from Philips, which cover a variety of uses. *TEA1100(T)* handles both mains-isolated and non-mains-isolated SMPS charging, being used as battery monitor and control. *SAA1500T* fast charges dynamic-loaded batteries; *TEA1090* in dmos is a self-oscillating power supply and power switcher to charge over the full mains range; *TEA1041T* monitors battery voltage and has a filter to avoid false indications of low battery voltage; *PCA1329T* charges static-loaded batteries; and *TEA1088T* detects full charge and is for non-mains-isolated SMPS systems. Philips Semiconductors Ltd, 071 436 4144.

Quad video buffer. Introduced by Siliconix to complement its range of crosspoint switches and multiplexers, the *Si584* quad video buffer IC replaces four 8-pin buffers. Bandwidth is 200MHz and output drive ±20mA to drive capacitive loads or a flash converter at up to 40MHz. Differential gain and phase are 0.3% and 0.1deg. Siliconix Ltd, 0635 30905.

TV chip. Toshiba's *TA8759BN* is a highly integrated device for television receivers, providing pal/Secam/NTSC video, chroma and deflection. Combined with one of the Toshiba PIF/SIF chips it gives all the processing functions needed by a multi-standard colour receiver. Standard switching is by subcarrier detection and a mode-change output switches external components. The deflection section performs sync separation and automatically detects

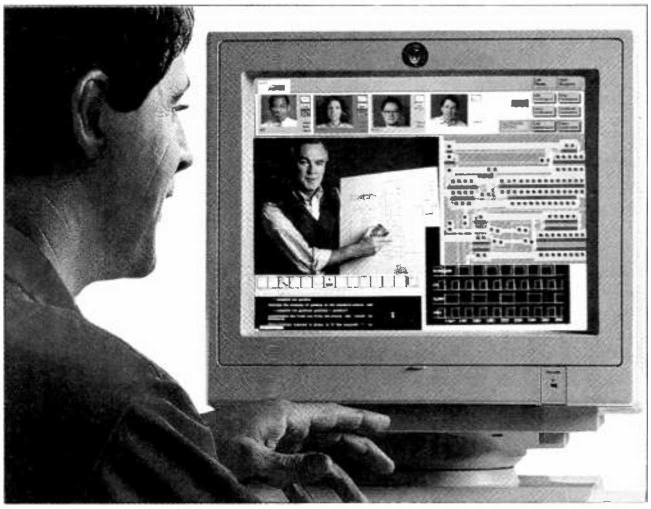

Mixed-signal ICs. *AVP1000* by AT&T is a three-chip set to implement full-motion video in teleconferencing and computers. The *AVP1300E* encoder, *AVP1400D* decoder and *AVP1400C* controller are compatible with the MPEG and P*64 compression standards and interface with ISDN comms lines. Data rate is programmable between 40Kbit/s and 4Mbyte/s. Only 1Mbyte of 60ns dram is needed for a fully configured system. AT&T Microelectronics, 0732 460424.

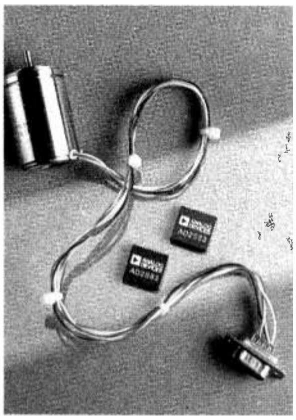

Resolver-to-digital converter. This device, the *AD2S83* from Analog, eliminates the tachogenerator in systems that normally require both that and a resolver by providing position and velocity information directly; its non-linearity of 0.1% and reversion error of ±0.3% rival tacho performance. A type II tracking servo loop converts resolver signals to a parallel natural binary word. Resolution can be optimised by external components. Free PC software is available to select component values. Analog Devices, 0932 253320.

mains frequency. A teletext interface is included. Toshiba Electronics (UK) Ltd, 0276 694600.

Logic building blocks

PLL clocks. Applied Micro Circuits Corporation has what it claims to be the first bicmos PLL clock generators. *S4402/3* generate multi-phase TTL clocks in the 20-66MHz range with less than ±250ps skew. *S4402* provides six outputs and the *S4403* another four copies in addition, all outputs being provided with enable signals. Feeding back one output allows all outputs to be phase-locked to a lower-frequency reference, and a programmable divider enables the user to select 21 different output relationships, phase-adjusted in 3.75ns increments. Amega Electronics Ltd, 0256 843166.

Programmable encoder. Serial encoder chip from United Microelectronics has an address combination range of over 380 million codes and is meant for use in infrared or RF control of doors, fire detectors, environmental control of buildings, alarms and car systems. It is available in dil or SOIC packages. United Microelectronics B.V., 010 31-20-6970766.

Memory chips

1.8V serial eprom. Serial interface memories from Atmel offer an 80% reduction in operating-mode power consumption and even greater saving in standby mode. All three of the standard bus interfaces in 2,3 and 4-wire configuration are usable. Clock speeds are 100kHz in two-wire form and 500kHz in three and four-wire configuration. Other versions use 2.5V, 2.7V or 5V supplies. Atmel (UK) Ltd, 0276 686677.

Configurable disk drive. Micro Linear's family of bicmos ICs for hard disk drives includes a configurable drive chip, a read-channel filter/equaliser and head amplifier. Taken together, this is claimed to be a complete solution for the read channel of 1.8in, 2.5in and 3.5in drives at up to 36Mbit/s. The *FC3560* uses the tile-array technique, in which the metal interconnection layer is the final, user-specified one, leading to reduced production time. Ambar Components Ltd, 0844 261144.

Switch-mode controllers. Three new high-voltage bicmos PWM chips from Supertex for use in power supplies use bipolar circuits for their low-noise linear sections, cmos for high speed and low power and dmos for high-voltage start-up. *HV9110/9111/9120* cope with power levels of 1W-150W. Clock speed is up to 1MHz and dynamic range is 120:1 at 50kHz and 12:1 at 500kHz for a wide range of inputs and loads. Current limit delay is 80ns. Starting is directly from up to 450V for the *9120* (120V for the *9111/9110*) but all will operate from inputs down to 9.4V DC without external resistors or filter capacitors. Kudos Thame Ltd, 0734 351010.

PASSIVE

Passive components

Chip trimmers. *TZBX4* ceramic chip trimmers from Murata are 4 by 4.5 by 3mm, are PCB mounted and, if covered by the film provided, are immersible in flux and solder and can be washed in organic solvents. Colour-coded capacitance values range from 1.4-3pF to 7-50pF, rated at 50 or 100V DC. Murata Electronics (UK) Ltd, 0252 811666.

Power metal-oxides. Welwyn has new ranges of power metal-oxide resistors, the *MO2-S* and *MO3-S*, rated at 2W and 3W at 70°C respectively. Both ranges cover 10Ω-100kΩ in E24, working in the -55°C to 235°C temperature range, with a temp. comp of 350ppm/°C. Cement coatings are flame-proof and solvent-resistant. Welwyn Components Ltd, 0670 882181.

Connectors and cabling

Bendy microwave cable. *Handiform II* 0.141 and 0.085 microwave coaxial cables by Atlantic have solid aluminium outer conductors and can be formed on site without any subsequent heat treatment and with no loss of performance. Further, there is no work hardening, so that reforming can be done. Losses in the 0.141in cable are 0.39dB/ft at 10GHz and 1.4dB/ft at 36GHz. Phase stability is maintained with bend radii down to 0.125in in the 0.085in version. Atlantic Microwave Ltd, 0376 550220.

EMI suppression. Oxley's *TVS* filter range of feedthrough capacitors incorporates a transient-voltage suppressor, providing small-signal EMI attenuation of 2dB at 100kHz and 75dB at 10GHz and clipping large spikes. As an example, the *DLT/10000/5/TVS* has a 10nF capacitor and a 5.6V suppressor which withstands 500 applications of a 150A, 8-20μs waveform to IEC801 part 5 with a maximum clamping voltage of 15.5V. Oxley Developments Co. Ltd, 0229 52621.

Displays

Bi-level leds. Series *552* and *552* led packages from Dialight contain two leds in red, yellow and/or green and come in several versions for 5V or 12V, 2mA operation, with or without limiting resistors. They are designed for right-angled PCB mounting with stand-offs on high-density boards. Dialight, 0638 665161.

Controlled LCDs. Meant for embedded use such as process control or retailing equipment, Hawke's Cirrus Logic board and Epson 640 by 480 LCD panel avoid most of the problems of using an LCD panel and driver chips, and come a good deal cheaper than a custom design. The combination displays a 64-level greyscale and the board interfaces to 8 or 16-bit buses, accepting MDA, CGA and Hercules modes. Software is provided. Hawke Components Ltd, 0256 880800.

Filters

Ceramic comms filters. NTK (Japanese) ceramic filters for mobile communications equipment are surface-mounted stripline types with extremely high temperature stability

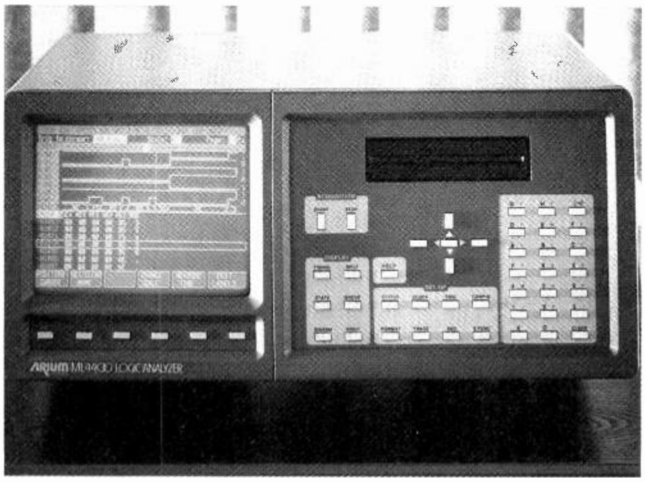

Logic analysis data capture. *ML4400* logic analysers from Arium can now be provided with a data capture system, the *Paladin*. It offers 100 channels of 100MHz synchronous capability in each module, these being coupled for more channels. Timing analysis is up to 1000MHz. Three modes are used: 100 channels at 100MHz or 50 at 200MHz; 80 channels of 100MHz synchronous data and 20 asynchronous; or 10/20 asynchronous channels at 1000MHz/500MHz. ARS Microsystems Ltd, 0256 381400.

and high Q. Two, three and four-pole units are made, to cover the range 814.5 to 1057.5MHz, two of them being for the 1.5GHz and 1.9GHz bands. The 1.9GHz types, *MFS1890B12X* and *MFS1890C12X* each have a 1890MHz centre frequency and 20MHz bandwidth; the former has a maximum insertion loss of 5dB and minimum attenuation of 25dB and the latter 6dB and 40dB. Quantelec Ltd, 0993 776488.

Hardware

Network routeing. *Vista* is a system for the routeing of network ports developed by Cableship and Oxley Developments. The system, hardware and software, allows a network manager to analyse all aspects of a cabled network for diagnosis, alteration and documentation. Oxley's Controlox patching matrix, a simple method of routeing and rerouteing ports, uses electronic scanning to report the network status to a computer, where software interprets these signals to provide a view of sources and destinations. Oxley Developments Co. Ltd, 0229 52621.

Instrumentation

Analogue + digital voltmeter. Amplicon's *MX570* multimeter provides both analogue and digital autoranged readings of resistance, alternating and direct voltage, and manual current, diode and continuity. Digital display will hold a value until reset while the analogue reading follows the signal. Ranges are: 400mV-1000V direct, 400mV-750V alternating, 400Ω-20MΩ, 400μA-10A (both) at 0.5% for the digital reading, 2% analogue. Amplicon Liveline Ltd, (Free)0800 525 335.

Traditional multimeter. Amplicon's *MX112G* analogue multimeter, intended for those who need to know whether the volts are going up or down, notes the voltage to six decimal places. Measurement on all ranges is to within 3%: alternating and direct volts and current 100mV to 16000V and 50μA to 10A; resistance 2kΩ to 2MΩ; capacitance 1μF to 1F; dwell angle for engines and noise to 66dB. Amplicon Liveline Ltd, (Free) 0800 525 335.

Spectrum analyser for EMC. Laplace's *SA450A* low-cost spectrum analyser uses an oscilloscope as its display and covers the 2-450MHz range with enough sensitivity, a high enough input impedance and a sufficiently flexible probe set to use for locating and measuring EMC emissions. Facilities include zoom to 1kHz/div, switchable 7kHz and 300kHz bandwidth filters, a demodulator with an audio output, –70dBm sensitivity, RFI attenuators and a dynamic range of 50dB. Centre frequency can be swept over the full range. Laplace Instruments Ltd, 0692 500777.

Digital oscilloscope. Yokogawa's range of digital oscilloscopes has a lower-cost member, the two-channel *DL1100*. Analogue bandwidth is 100MHz, sampling rate on each channel is 20Msamples/s and memory length is 32Kword/channel. A printer provides hard copy in seconds. Screen refresh rate is 60Hz to give an impression of real-time and several stored signals can be superimposed, with varying tube intensity to emulate a tube-storage instrument. Martron Instruments Ltd, 0494 459200.

EMI gauge. Rapid Technology's *EMG800* gauge enables electrical equipment to be accurately tested for EMI emission, its results being traceable back to a standard. The supply wire of an electrical appliance is passed through the *EMG800*'s toroidal sensor and a worst-case frequency identified and continuously monitored. The instrument will then provide a led or acoustic indication if the appliance is within preset limits, nearly fails or completely fails. Rapid Technology, 081 6598220

100MHz oscilloscope. In a small (310mm/130mm/370mm) package. Thurlby-Thandar's *V1085* oscilloscope provides four 100MHz channels and features cursor measurement, CRT readout, autoranged sweep time and frequency measurement. The autosweep selects the correct time to display between 1.6 and 4 cycles of signal: the f meter displays frequency between 20Hz and 100Mhz; and the CRT readout shows sensitivity, sweep time, delay time, hold-off and cursor measurement results. A range of triggering modes is present, with the selected triggering input brought to an output, and the four channels can be configured as a two-channel X-Y display. Thurlby-Thandar Ltd, 0480 412451.

Infrared thermometers. Four models in the *D200* series of IR temperature measuring equipment from Digitron perform contactless measurement from -20°C to 250°C to within ±1% of reading, ±3°C. Depending on the type of probe supplied, range is 0.5m or closer, and the sensor signal is linearised. Cost is said to be lower than in comparable instruments. Digitron Instrumentation Ltd, 0992 587441.

3mm trimmer pot. Murata's *RVG3A08* single-turn SM trimpot measures only 3mm square, but is easily adjusted by means of the special screwdriver and a stainless-steel funnel, eliminating backlash. Resistance range is 200Ω-2MΩ at ±25%. Rating is 0.1W at 70°C and maximum voltage is 50V. Murata Electronics (UK) Ltd, 0252 811666.

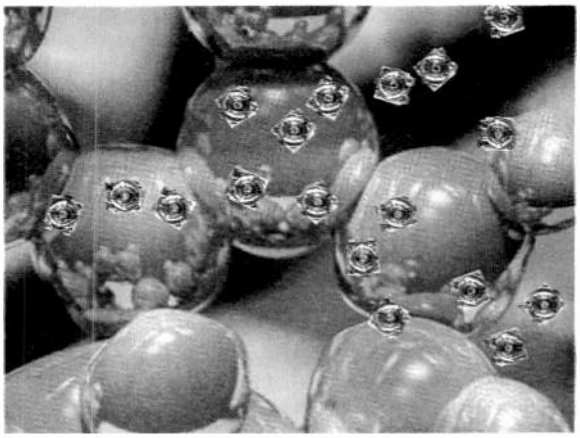

Spectrum analyser. Thurlby-Thandar's *TSA250* spectrum analyser adaptor converts an oscilloscope into a 250MHz analyser with a measurement bandwidth of 250kHz. Centre frequency is adjustable over the full range, an LCD giving frequency display, and scanwidth and rate are fully adjustable. Amplitude range is –70dBm to 0dBm over the whole range and a cal button provides a calibrated 0-30dBm, 50MHz marker and harmonics. Thurlby-Thandar Ltd, 0480 412451.

Literature

Inductor design guide. Allied-Signal Inc has a comprehensive application note for its Metglas amorphous choke cores intended for high-frequency SMPSs. Saturation inductance of the cores is 1.56T and they can be operated at a higher DC bias than usual with relatively little change in permeability. They come in a range of sizes for application in EMI filters and magnetic amplifiers, for example.

Rectifiers. GI's new databook and 1992 condensed catalogue of rectifiers covers flat-pack SM devices and isolated power packages in standard, fast-recovery, Schottky and TVS packages. In 15 chapters and 680 pages, the databook includes all relevant data and applications information. General Instrument UK Ltd, 0895 272911.

Power mosfets. Harris's latest power mosfet databook covers over 1000 devices, including megafets, logic-level types, IGBTs up to 1kV, intelligent high-speed power drivers and controllers, ultra-fast rectifiers and new n-channel fets, and presents application notes on the devices described. Harris Semiconductor (UK), 0276 686886.

Production equipment

Real-time IR thermography. Units in the Thermovision *800* series of instruments from Agema now form a stand-alone complete system for real-time temperature measurement of electronic components, analysing dynamic and static thermal patterns of PCBs, hybrid circuits and racking systems down to discrete component level. One of a range of three scanners produces a TV-like image on a SVGA monitor, a wide range of lenses being available for various distances and object sizes. Agema Infrared Systems Ltd, 0525 375660.

Conductive adhesive. Fry's Metals says its *Agesive* silver-loaded adhesive is ten times more conductive than any other. It contains 78% by weight of silver with an average particle size of 5µm to give a volume resistivity of 0.00003Ω/cm, which compares favourably with that of solder. The material possesses high shear strength and high thermal conductivity, its resistivity remaining constant at high temperatures. Fry's Metals Ltd, 081-665 6666.

Laser-cut stencils. Solder cream stencils and the *Platefix* system from Multicore provide an extremely high level of accuracy to the application of solder to PCBs. Stencils can be cut directly from customers' cad data to an accuracy of ±0.0006in over a distance of 40in, with aperture widths of 0.005in. Platefix is an interchangeable frame to hold the stencil, fitting all popular printing machines accurately. Multicore Solders Ltd, 0442 233233.

Power supplies

DC-to-DC converters. Sil converters from Amplicon in the LF series provide 1000MΩ isolation at 500V. Dual 5V, 12V or 15V outputs are provided from inputs of 5V or 12V, output power being 750mW. There is 1s short-circuit protection, ±10% and 1.5% regulation and stabilisation, input reflected noise of 75mV pk-pk and output ripple and noise of 50mV pk-pk. If mounted near each other, switching frequencies of the devices lock, assisting with filtering and EMC. No heat sinks needed to 80°C. Amplicon Liveline Ltd. 0800 525 335.

Small DC-to-DC converters. DA and DB converters from Astec are 2.5W and 3W types designed for cramped conditions giving single or dual, regulated or unregulated outputs of 5, 9, 12 and 15V DC. All have short-circuit protection, 500V input/output isolation, and a pi input filter for reflected-ripple reduction. Inputs are 5-48V DC, output tolerance is 3% and ripple and noise amount to 50mV pk-pk maximum. Switching frequency is 20kHz. Astec Standard Power Europe, 0246 455946.

30A lab power supplies. *PD* power supplies from Trio-Kenwood come in voltages up to 110V and currents to 30A. Phase control and a choke-input filter give good regulation and a 10-turn pot. allows precise output setting. Remote sensing is provided, as is remote control, and voltage/current limits can be preset and checked during operation, leds showing V and I limited operation. Trio-Kenwood UK Ltd, 0923 816444.

Small SMPSs. *Power Gorillas* from Elco come in 5W and 10W versions and, at 65 by 45 by 21mm for the 10W units are among the smallest in the jungle. With universal input, the range has inrush and over-current protection, UL and IEC approval and CSA certification. AC input of 85-264V at 47-440Hz and DC of 110-340V is accepted and outputs for both ranges are 5V, 12V±12V or ±15V (30V), accurate to within ±5%. XP plc, 0734 845515.

Radio communications

Saws for mobiles. Three surface acoustic wave filters from RFM, SF1033/34/35 are intended as 71MHz IF filters in GSM handsets and base stations. The 1033 and 1035 for handsets exhibit typical insertion loss of 5.5dB, ultimate rejection of 50dB, minimum 1dB bandwidth of ±90kHz and 3dB bandwidth ±150kHz. The 1034 base-station device shows corresponding figures of 11dB, 80dB, ±90kHz and ±150kHz. Quantelec Ltd, 0993 776488.

Radio-frequency ID tags. *Tiris* from Texas Instruments is TI registration and identification system, which is now augmented by a low-frequency passive transponder to identify trucks and containers in parking areas or toll booths, warehouses and factories. Units in the new range have a range of 2m and store up to 64bit of data or 20 digits. At the low frequency used, the vehicle-mounted units will function in virtually any position and the reading antenna can go beneath the road, where it is unaffected by ice and snow and non-metallic surfaces. Users create their own codes to preserve security. Texas Instruments, 0234 223252.

Transmitter combiners. 800/900MHz trunking transmitter combiners from The Antenna Specialists (USA) use high-Q ceramic cavities to permit combined channels with 150kHz spacing, with low insertion loss. Five and ten-channel models are smaller than is usual and need only 60% of the rack space taken up by conventional designs. Temperature drift is automatically fine-tuned out. Power input is 150W/channel; reflected power from the antenna can be 80W; and maximum VSWR is 1.25:1. The Antenna Specialists Co, (US) 0101 216 349-8400

Radio telemetry. This 450MHz telemetry link is claimed by Warwick Industrial Electronics to provide a reliable and cost-effective alternative to a multi-core cable, either inside or outside buildings. Each transmitter has four 4-20mA inputs, eight opto-isolated digital inputs and an RS-232 serial port. Gaussian minimum-shift keying techniques allow data transmission at up to 9600baud and range is 40 miles. The receiver has four 4-20mA transmitters, eight voltage-free contacts and an RS-232 serial output. Warwick Electronics Ltd, 0455 233616.

Switches and relays

Reed relays. FR's new reed relays in dip, sip and SM packages come in a range of forms with contact ratings of 3-50W and include internal and external screening and diode protection. FR Electronics, 0202 897969.

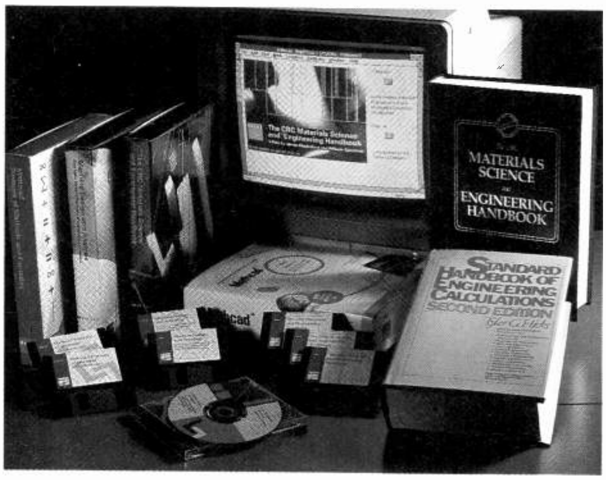

Electronic handbooks. Latest version of MathSoft's problem-solving software, *Mathcad 3.1*, allows an engineer to import the data normally found in reference books directly to a PC and to manipulate it into a Mathcad worksheet. Equations, formulae and diagrams may be used interactively to calculate results. Changing parameters in the handbook itself causes Mathcad to compute the new results which, since Mathcad supports object linking and embedding, can be pasted into Word for Windows and Excel. Adept Scientific Microsystems, 0462 480055.

Transducers and sensors

Load cell. Model UTC load cells made by Control Transducers cover ranges of 230kg to 22700kg with combined non-linearity, hysteresis and repeatability of ±0.15% of full scale on both static and dynamic loads. The four-arm Wheatstone bridge of bonded strain gauges gives a 20mV output from 10V at an bridge resistance of 350Ω. Temperature range is −10°C to 65°C. Control Transducers, 0234 217704.

Pressure sensors. Motorola's range of pressure sensors now includes the *MPX7100* and *MPX7200* series, which have a high-impedance input and on-chip temperature compensation and calibration for portable, low-power and battery operation. 7100 covers 0-15psi and the 7200 0-30psi, both being temperature compensated from 0°C to 85°C. Motorola Inc., 0101 800 2244 5504.

Small accelerometers. JTFC strain-gauge accelerometers measure up to 1000"g", with overload up to 5000g, their small size and low mass reducing the possibility of distorting results. Frequency range is 0 to 6kHz and output is ±100mV from 10V DC. Temperature compensation is from 24 to 93°C and the devices are fitted with connectors. RDP Electronics Ltd, 0902 457512.

COMPUTER

Computer board level products

EISA-compatible I/O cards. *PCI-20501C* PC-compatible data acquisition cards from II are claimed to be the first to offer integrated analogue and digital input/output on Extended Industry-Standard Architecture. The cards use the EISA

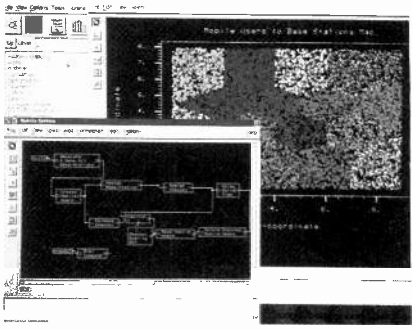

Network simulator. *Bones Designer* is a revised version of the *Bones* network simulation tool, 32 bits to provide performance compatible with VME. First available is the *PCI20502C-1*, which has eight single-ended 12-bit analogue inputs with a total throughput of 1MHz, channels being scanned in any order. The card also includes 16 digital i/o channels, two 16-bit counters and a timebase generator. Dual DMA channels allow simultaneous input and output. The package includes system diagnostics and linkable software drivers in QBasic, C and TPascal. Intelligent Instrumentation, 0923 896989.

Compact DSP. Data Beta's *DB056* is a small, i/o-intensive, low-power digital signal-processing module, which comes complete with custom software, fully tested and debugged. It connects to a PC with no extra interfacing. The device uses a Motorola *56001* 27MHz DSP, 96kword of zero wait-state ram and comms interfacing for use either alone or with a host processor, a 6.75Mbyte/s parallel interface and serial port being included. DSP code can be compiled, assembled and simulated on Sun or Vax workstations, PCs or Macs. Data Beta Ltd, 0734 303631.

Development and evaluation

Sound generator board. *Doc II*, the digital sound generator from Integrated Circuit Systems Inc, is now presented as an evaluation board. It is also available in a package containing documents, circuit diagrams, board artwork, firmware, driver software and licences for production. The sound card will synthesise 24-voice polyphonic, multitimbral stereo, the operating system being controlled by midi commands and providing multi-channel PCM playback. Audio sampling is at 44.1kHz, 22kHz and 11kHz from internal sources and one external source. Amega Electronics Ltd, 0256 843166.

having a better user interface and the capability of animating simulations. Cost of starting with the package has been reduced by separating library modules and core simulator. A user builds a diagram on screen by connecting signal processing blocks with data pathways, the blocks being hierarchical in nature, so that a block can be at several levels of complexity. Movements of packets of data are recorded and played back in animation to speed debugging, as a teaching aid or presentation method. Comdisco Systems, 0454 614256.

8051/68HC11 development systems. *Ideas* is a package meant to ease the debugging of software for the CT series of microprocessor development systems. It is an emulator that automatically edits any errors found during debugging. in a similar manner to *Turbo C* debuggers. Run from the dos prompt or from inside CT-Series, tasks in the development process are called up for editing or compiling, the object file then being linked and emulated in-circuit from the Ideas menu. Ashling Microsystems Ltd, 0628 773070.

Software

PC comms. Micro SciTech's *Comio* V1.0 serial communications software is meant to simplify development of C programs to provide interrupt-driven data comms with PC com ports. It comes as a *C* or *8086* mnemonics source code; *C* source and dos-executable demo, example and utility programs are included. Micro SciTech Ltd, 0703 784578.

Views on schematic capture. *Design Centre*, a schematic capture program from MicroSim, now incorporates views, which is a method of looking at bits of circuit in different, but quickly selected ways. It may be that a circuit is shown by its circuit diagram and a graph of its behaviour, both views being selectable. Used with *PSpice*, a transistor-level view of an adder, for example, could be assigned, together with the gate-level view, to the adder symbol, default being either view. Design Centre runs under Windows or Sun OpenWindows or, in analogue form only, under dos. MicroSim Corporation, (USA)800 245-3022.

Asic development tools. Development tools for *Z80* and *64180*-cored asics are introduced by Microtec. The set includes an Ansi *C* compiler, cross assembler and the *Xray* source-level debugger. Conventional Zilog and Hitachi microcontrollers up to 12MHz and their variants are also supported. All the tools work with PCs, Sun-3 and Sun-4 (Sparcstation). Microtec Research Ltd, 0256 57551.

Prediction by neural net. Complementary software for NCS's *Windows 3.1* neural network package, NeuForecast, predicts time-varying data. It runs on a PC under Windows to provide a means of automating data entry, training and interrogation of neural networks for time series prediction. DDE in Windows will allow automatic transfer of data from a PC data acquisition package to a neural network, organising the data into the sets needed for network input. Neural Computer Sciences, 0703 667775. ■

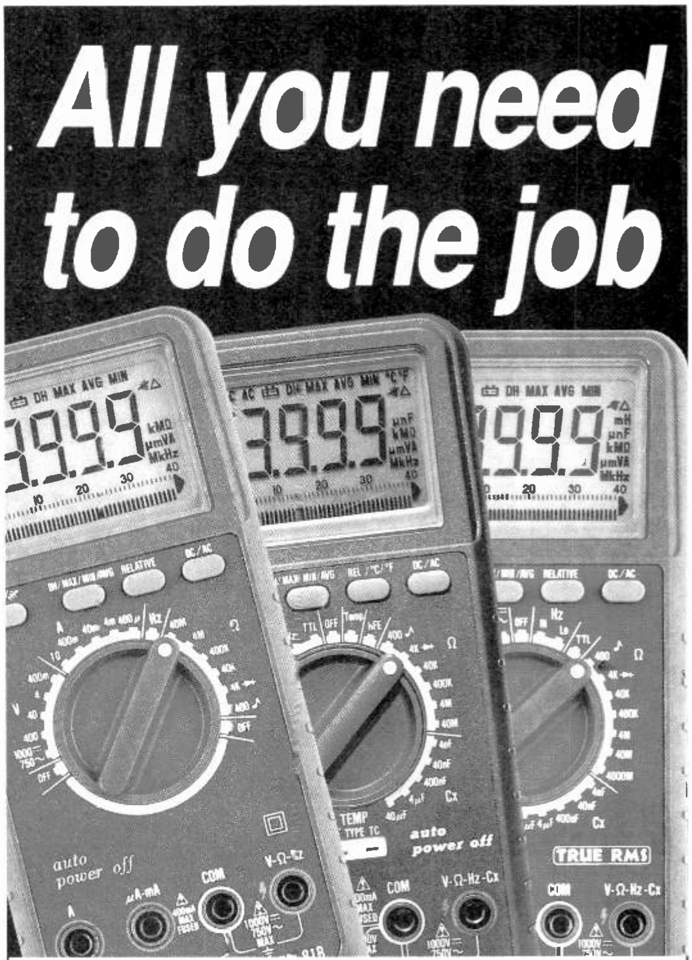

DESIGN BRIEF

A-to-D converter with analogue muscle

Ian Hickman puts to work a unique A-to-D converter capable of taking an instantaneous snapshot of the voltages on all its eight inputs.

My aim was to design a versatile analogue plus digital I/O card to fill the spare card slot on a rudimentary dual floppy mono PC. The digital side does not present too much of a problem: it will probably use opto-isolators for inputs and relays for outputs, with a few non-isolated lines for use where speed is essential. But for the analogue side I decided to experiment with the recently released *Max155* 8bit A-to-D converter from Maxim. The converter has eight inputs, but its really novel feature is that each input is provided with its own individual track/hold circuit, all the T/Hs being switched from track to hold simultaneously.

Outputs of the T/H circuits go to an eight input multiplexer, the output of which routes the selected way to an 8bit A-to-D. Result for each channel is stored in an internal 8 x 8 ram and is available on demand over a byte-wide output bus.

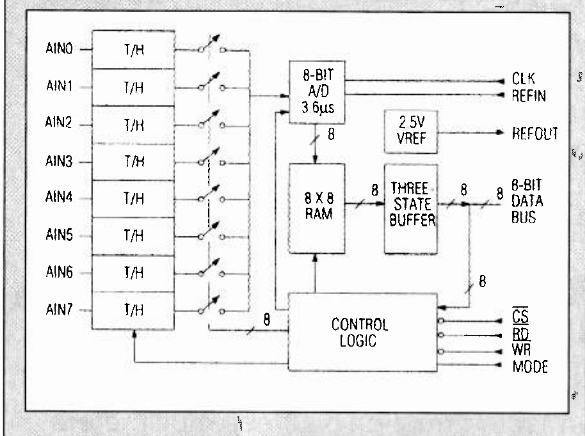

Fig. 1. The Max155 8bit A-to-D converter samples eight input channels simultaneously. Usual arrangement is where an eight-input multiplexer precedes a single sample/hold circuit, limiting the device to converting the inputs one after the other.

Unique architecture

The architecture is thus fundamentally different (see **Fig. 1**) from most eight input A-to-Ds, in that usually the multiplexer precedes a single T/H, so that channels can only be sampled sequentially.

Max155's unique arrangement means it is capable of taking an instantaneous snapshot of the voltages on all eight inputs. Although they are converted sequentially by the single A-to-D converter, the eight output bytes all refer to the voltages on the eight inputs at the same instant – important in applications such as I/Q processing. But it is particularly useful in view of the *Max155*'s ability to configure its eight (single-ended) inputs as four differential input channels.

When a pair of inputs are used as a differential input, the common mode range extends from V_{ss} to V_{dd}. For my intended application, there is effectively isolation between the 0V rail of the PC and the 0V common of the external circuit. True, both will be separately referred back to mains earth, but a direct connection between them can be omitted, thus avoiding the creation of potential hum problems due to an earth loop.

For the purposes of initial experimentation with the analogue aspects of the chip, it was used in hard-wired (output only) mode, which calls for a little explanation. The device's 8-bit data bus is bi-directional, providing the converted A-to-D data in output mode, but accepting instructions from a host micro in input mode.

I/O (input/output) mode operation is selected by leaving the MODE pin, pin 5, floating. Output only mode is selected by wiring MODE to V_{ss} or V_{dd}, the former setting all eight inputs to independent single ended conversions, and the latter setting them up as four differential inputs.

A further option is provided by the V_{ss} pin: wired to analogue ground (0V common) the device performs unipolar conversions covering the range 0V to *Vref* (a 2.5V on chip reference is provided) while wired to –5V the bipolar range $-V_{ref}$ to $+V_{ref}$ is covered. As in I/O mode, readings are initiated in hard-wired mode by the rising edge of the /WR pulse, provided that /CS is low. The conversion time depends upon the frequency of the clock supplied to the A-to-D section, but can be as little as 3.6µs/channel with a 5MHz clock.

Following conversion, the application of up to eight successive /RD pulses will read out the eight channel samples, the ram address being automatically incremented by each /RD pulse and reset to 0 by the falling edge of the next /WR pulse. Thus it is not necessary to read out all eight results; if only say five inputs are used, then only five /RD pulses are required, provided that the inputs used are *AIN0* to *AIN4*.

Versatower:

A range of telescopic towers in static and mobile models from 7.5 to 36 metres with tilt-over facility enabling all maintenance to be at ground level.

Designed in accordance with CP3 Chapter V: part 2 1972 **for a minimum wind speed of 140 kph in conditions of maximum exposure** and specified by professionals world-wide where hostile environments demand the ultimate in design, quality and reliability.
Suitable for mounting equipment in the fields of:
Communications
Security surveillance – CCTV
Meteorology
Environmental monitoring
Geographical survey
Defence range-finding
Marine and aero navigation
Floodlighting
Airport approach lighting
Further details available on request.

STRUMECH ENGINEERING LIMITED
Portland House, Coppice Side, Brownhills
Walsall, West Midlands WS8 7EX. England
Telephone: Brownhills (0543) 452321
Telex: 335243 SEL G
Fax: 0543 361050

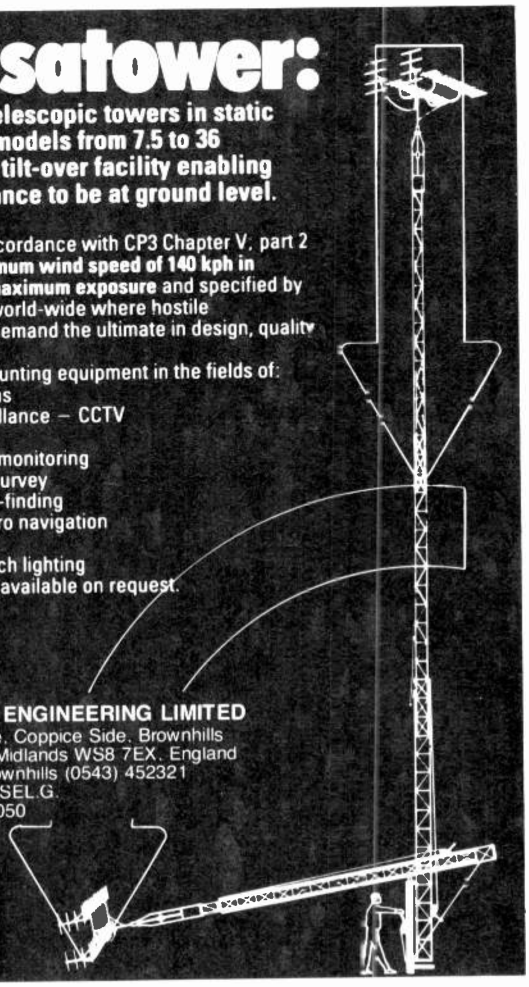

CIRCLE NO. 144 ON REPLY CARD

Prototypes manufactured directly in your own Lab in only a few hours.

LPKF offers a complete solution: Professional periphery for every CAD System.

Time spec sheet
of a 4 layer multilayer
milling inner layer: 45 min
pressing: 120 min
drilling: 10 min
through plating: 105 min
milling outer layer: 60 min
operating time: 5 hrs. 40 min

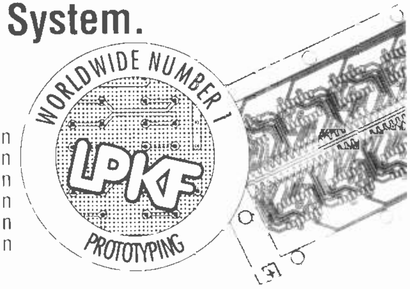

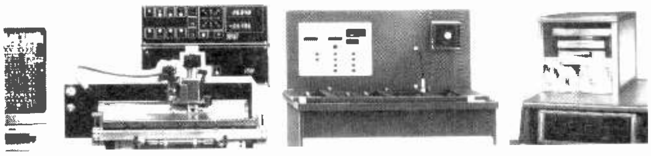

CAD > Milling/Drilling Prototypes > Through Plating > MULTIPRESS

For prototype production LPKF Mill/Drilling machines have proven its merits in thousands of installations all over the world. CAD data can be downloaded from any CAD system and prototypes are manufactured automatically either through the mill/drilling machine or by means of our latest laser technology.

The CONTAC through plating system and the MULTIPRESS completes the system.
Suitable for any CAD system!

Request info material or call:

GH Systems

GH Systems [illegible]
Bracknell, Berkshire RG[illegible] UK
Tel 0344 860 [illegible] Fax 0 [illegible] 46
Telex [illegible]

CIRCLE NO. 145 ON REPLY CARD

Precision C51 Tools, Fine Tuning For All...

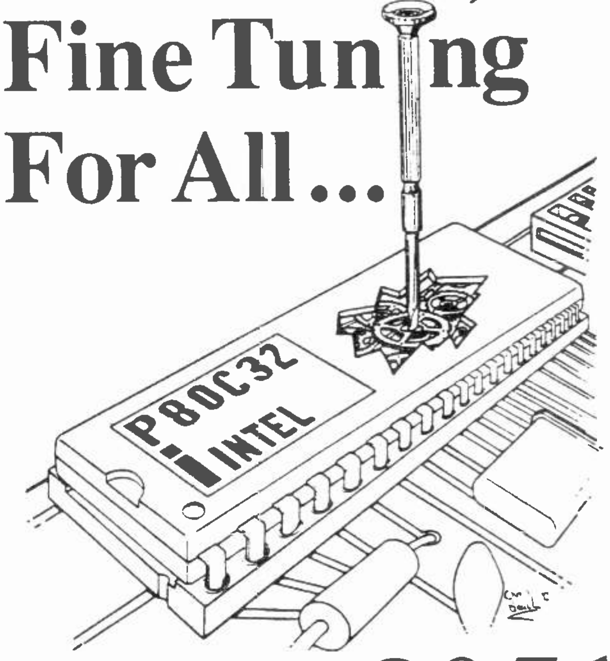

...8051 Family Devices

To get the most out of the 8051 family, the *best* tools are essential. The Hitex tool kit offers *two* 8051-dedicated in-circuit emulators, designed to locate real time bugs in the target environment.

When combined with the Keil C51 compiler our ***teletest 51 Professional*** and ***Junior*** development systems ensure efficient, high-integrity real time code, delivered on schedule.

For less demanding tasks, the ***telemon*** ROM-based debugging kits provide a powerful alternative - the common ***HiTOP51*** user interface allowing a rapid transition to emulator debugging.

For further information, ask for our ***HiTOP*/C51** data pack now.

Hitex (UK) Ltd
Sir William Lyons Road
Science Park
Coventry
CV4 7EZ

☎ 0203 692066
Fax 0203 692131

KEIL ELEKTRONIK

hitex

A subsidiary of Hitex Systementwicklung GmbH

CIRCLE NO. 146 ON REPLY CARD

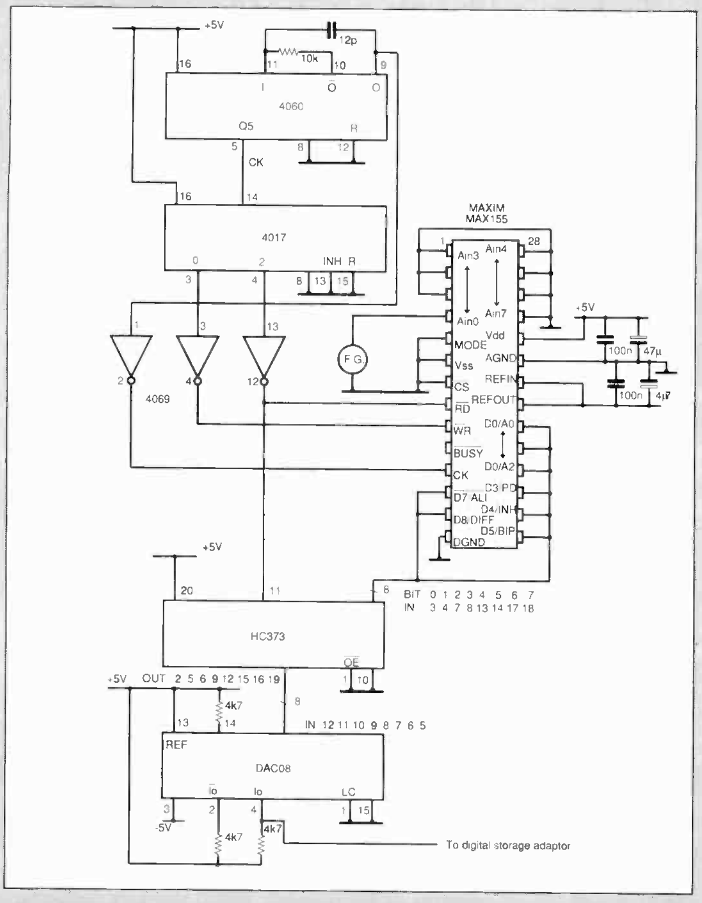

Fig. 2. The testbed circuit used to operate the Max155 in hard-wired (output only) mode. In this mode, all inputs must be unipolar or all bipolar, and all single ended or arranged as four differential inputs.

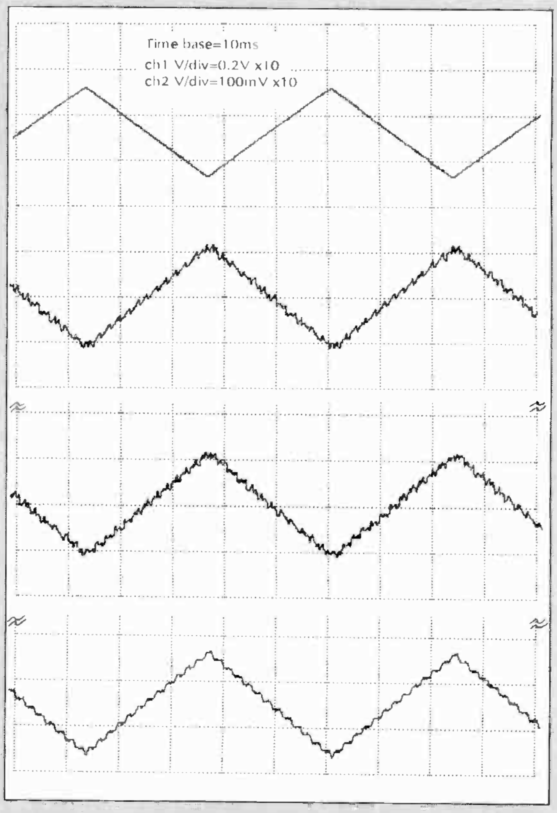

Fig. 3. Operation with a 20Hz triangular input. a) Input (top trace) and output (lower trace) of a D-to-A connected to the latched data output of the Max155: single shot acquisition. b) D-to-A output from a different acquisition. c) D-to-A output averaged over sixteen acquisitions.

Testbed

A quick testbed using the hard-wired output-only mode was thrown together using the circuit shown in **Fig. 2**. The internal oscillator of the *4060* ran at just over 1MHz and this was buffered and used to clock the A-to-D. The Q_5 output of the *4060* at about 32kHz was used to drive a *4017* decade counter with ten decoded outputs.

Outputs 0 and 2 were inverted and used as the */WR* and */RD* pulses respectively, giving a 3.2kHz sampling rate. Thus the sampling rate was tied to the A-to-D clock rate, but this is not essential provided that the clock to /WR delay of 800ns minimum (track/hold acquisition time) is met. The /RD pulse was used to store the data from the first channel, *CH0*, into a *74HC373* 8bit D-type latch.

With no microcontroller attached, the easiest way to see what was going on was to reconvert to analogue form, so the latch outputs were applied to a *DAC08* digital to analogue converter. With the testbed up and running – following debugging – a 20Hz triangular waveform from a function generator was applied. The amplitude was adjusted to just less than the full A-TO-D input range.

Figure 3a shows the input wave (upper trace) and the output of the D-to-A converter at its I_o pin, as a single shot recording made with a digital storage adaptor. The first point of interest is the apparent inversion of the trace. This is because the multiplying D-to-A's

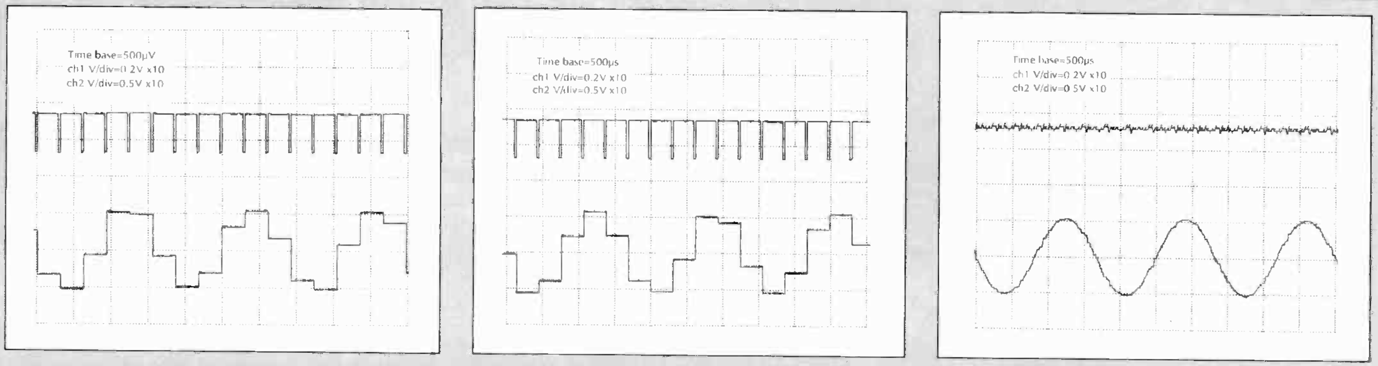

Fig. 4. Single shot acquisitions of a 600Hz sinewave at the 3.2kHz sampling frequency, triggered from the sinewave. a) /RD pulses (upper trace) and the sampled sinewave (lower trace) b) As a), but a different single shot; note different phasing - the sampling waveform frequency and the sinewave frequency are unrelated. c) Result of averaging 16 acquisitions: the sampling pulses have averaged to very nearly zero, whilst the step approximations to a sinewave have averaged to a very good approximation of the original.

ABI
E·L·E·C·T·R·O·N·I·C·S

THE £OGICA£ WAY TO TEST LOGIC

ABI CHIPMASTER COMPACT DIGITAL IC TESTER will identify and functionally test more than 4000 generic digital logic devices including memories, state variable functions, processors and multiplexers.

Functional testing – which operates on both bipolar and cmos devices – employs fully dynamic algorithms including truth table examination for state machine components. It also undertakes parametric logic threshold tests.

ChipMaster Compact diagnoses faulty devices breaking function/non-function down to individual pin level providing insight into chips which fail in service.

Developed and manufactured by ABI Electronics, the UK's leading board repair and diagnostic systems company.

The ChipMaster Compact is available through EW+WW at a special reader offer price of £245 + VAT (£287.88).

We know that you will be impressed by this diagnostic tester. And in the unlikely event that you aren't, we will refund the purchase price provided that the instrument is returned in good condition within seven days of receipt.

To order simply call our editorial administration line on 081-652 3614 with your credit card details.
Alternatively, fill in the coupon below:

- ***More than 4000 generic devices in library***
- ***Regular library updates available***
- ***Eight to 40 pin capability***
- ***Identifies unmarked devices***
- ***Alpha-numeric display***
- ***Detects intermittent faults***
- ***Displays diagnostic data for individual pins***
- ***Handheld, battery operated***
- ***No pre-programming required***
- ***Easy to use***

ABI ChipMaster Compact

Debit my Access/Visa/Amex/Diners credit card

☐☐☐☐☐☐☐☐☐☐☐☐☐☐☐☐ Expiry date..............

or enclose cheque/PO made out to Reed Business Publishing Ltd for £287.88.

Name..

Address...

....

....

Signature...

Contact phone number (if possible)..

Send coupon to: Lorraine Spindler, Electronics World + Wireless World, Room L333, Quadrant House, The Quadrant, Sutton SM2 5AS. Phone 081-652 3614.

I_o output pin sinks a current equal to $I_{ref}/256$ times the digital input code. Therefore an input of 00H results in no voltage drop across the 4K7 resistor load resistor giving a +5V output, and an input of FFH gives maximum negative-going output. (Normally, I_o would be connected to the virtual earth of an inverting op-amp, giving an erect output in place of the inverted one.)

The second point to note is the considerable noise, equivalent to several least significant bits of resolution, present on the output waveform. This is doubtless the result of crosstalk between the analogue and digital circuitry, due to the plug-board construction.

Figure 3b shows the output trace resulting from a later single shot acquisition; the fine detail is quite different, due to the different phasing of the input relative to the sampling pulses. This illustrates the care in layout which is necessary even with an 8-bit system; one can imagine the precautions that would be necessary with a 12-, 14-, 18- or even 22-bit system!

Figure 3c shows what happens when the sampling adaptor is set to average sixteen acquisitions rather than just recording a single shot. It looks as though the system is operating with just sixteen levels – four effective bits, but again this is misleading, a second averaging run produced a distinctly different picture.

Next, a 600Hz sinewave was applied to *AIN0* of the *MAX155*, resulting in about six samples per cycle. **Fig. 4a** shows a single shot recording of the negative going read pulses, upper trace, and the "sinewave" output by the D-to-A.

Figure 4b is the same again, the sampling adaptor being triggered in both cases from the input sinewave. Because the frequency of this is unrelated to the sampling rate, the picture is substantially different – the different phasing of the sampling relative to the zero crossing of the input sinewave can be clearly seen at the left-hand edge of the two traces.

Figure 4c is a 16 trace average run. Due to the lack of synchronism between the sampling pulses and the sinewave from which the sampling adaptor was triggered, the sampling pulses have averaged out to very nearly zero. However, the "float" on the positioning of the sinewave only amounts to about one sixth of a cycle, so this does not average out to nothing. In fact, the average of a mere sixteen cycles has resulted in the reconstruction of a remarkably good approximation to the original square-wave, demonstrating graphically the power of digital signal processing.

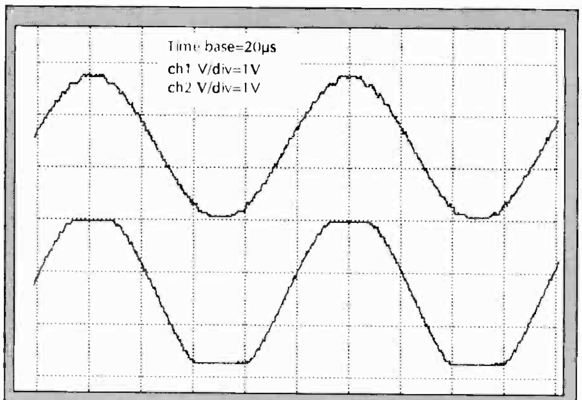

Fig. 5. 20Hz sinewave input. a) D-to-A output when the input is almost full scale. b) as a), but amplitude increased beyond full scale input range. Note clean overload indicated by clipping.

Figure 5 shows the D-to-A output with a 20Hz sinewave applied at *AIN0*, at the same level as the earlier triangular wave – ie just less than the full scale range of the A-to-D (upper trace) - and also the effect of increasing the input amplitude. The A-to-D overloads cleanly, outputting codes *0DEC* and *255DEC* in the negative and positive regions of overload respectively.

Hard-wired mode is very handy for the simpler applications but it does sacrifice much of the device's flexibility. For example, all inputs must be unipolar or all bipolar, and all eight single-ended or else arranged as four differential inputs. Furthermore, in the case of a differential pair, eg *AIN2* and *AIN3*, the even numbered input becomes the positive input – if the input at pin *AIN2* is at any negative voltage with respect to pin *AIN3* a zero result will always be returned. ■

Active filter designs in basic terms

Introduction to active filters covers active filters, their design and operation, and related topics. After an introductory chapter covering components, basic filter theory and responses, frequency scaling etc, the second chapter analyses the Butterworth and Chebychev responses in considerable mathematical detail. Chapter 3 deals with op amps and their limitations (although the only op amp whose characteristics are mentioned is the venerable *741*) and op amp circuits such as the inverting and non-inverting connections and the three op amp instrumentation amplifier.

Chapter 4 covers single op amp first and second order sections, low- high- and band-pass using the VCVS (Salen and Key) and the MFB (multiple feedback) circuits.

Mathematical treatment is extensive and, like all the others, this chapter concludes with a selection of problems, complete with answers. The next chapter describes the three or four op amp filters variously known as the Biquadratic or State Variable filter, including the band reject (notch) function, and also covers switched capacitor filters briefly. Chapter 6 is – engagingly for a book on active filters – devoted to passive filter circuit design. It is the only chapter which gives tables of normalised component values; designs with 2-10 poles are covered, but for the Butterworth case only. However it leads in nicely to Chapter 7 which covers passive-filter-simulating gyrator based circuits, using FDNRs or "supercapacitors". Here, the mathematical treatment is distinctly abbreviated, with results being simply stated rather than derived at length. Chapter 8 deals with sensitivity analysis in general, with worked examples of the gain and phase sensitivity of the Salen and Key second order low-pass section, while expressions for the sensitivity of Q and Ω_o to variations of each of the components are also derived. A brief appendix covers the use of cad (computer aided design) methods but although *Spice* is mentioned, the only one described – with examples of gain and phase plots versus frequency for a second order band-pass MFB filter - is *Microcap*.

The book is generally well produced, though as every author knows to their cost, the odd error has slipped through, such as a band-pass circuit captioned "band reject". Usefully, each chapter contains worked examples using the mathematical expressions derived in the text.

The index is hardly adequate; for example, "high-pass", "band-pass" and "band-reject" appear, but low-pass does not appear either under "low- " or "filter". The single amplifier Biquad circuit with a finite zero (so useful for building high order elliptic filters) is not covered, nor indeed is any implementation of the elliptic filter. Moreover, although the all-pass filter is briefly mentioned in passing, the reader will look in vain for any mention of Bessel, Gaussian or other filter types. The book is aimed at the basic level – as the Introduction and back cover blurb make clear – at undergraduates and BTEC students who have examinations to pass. To these it will certainly prove useful and more than basic Butterworth and Chebychev types will not be required.

Introduction to active filters, Allan Waters, £13.99 paperback. Macmillan Press, Houndmills, Basingstoke, Hampshire RG21 2XS. ISBN 0-333-48862-8.

Ian Hickman

ANCHOR SURPLUS LTD
THE CATTLE MARKET
NOTTINGHAM
NG2 3GY
TEL: (0602) 864902 & 864041
FAX: (0602) 864667

TECHTEST 250 VHF/UHF SIGNAL GENERATORS
LOW BAND, HIGH BAND, UHF, FM/AM.
EPROM CONTROLLED, SYNTHESISED, 200CH. 12-VOLT MAINS.
PORTABLE, RUGGED CASE. 80–105MHz. 140–170MHz. 440–475MHz.
FREQUENCY RANGES EXTENDABLE
ie 50–120MHz IS OK WITH LOSS OF CALIBRATION.
203mm×305mm×203mm (8″×12″×8″), 7.5kg.
200chs . . . 12.5kHz SPACING . . .
PROGRAMMED EPROM . . . SELECTED BY 3-DIGIT THUMBWHEEL.
0.3μV TO 3mV INTO 50Ω.
SUPPLIED EX-EPROM (2716) WITH INSTRUCTION MANUAL . . .
SERVICE MANUAL AND EPROM PROGRAMMING INFO/
BASIC PROGRAM.
FEW REMAINING AT £99

PHILIPS PM3217 50MHz OSCILLOSCOPES
CALIBRATION VERIFIED **£325**

HP 1476 100MHz OSCILLOSCOPES
DUAL TRACE AND TIMEBASE
CALIBRATION VERIFIED **£599**

HP 1600A LOGIC STATE ANALYSER 16bit 20MHz **£199**
HP 1607A LOGIC STATE ANALYSER 16bit 20MHz **£125**
Buy both and get 32bit analysis (1600S System)
for only **£299**

MARCONI TF2370 SPECTRUM ANALYSER 30Hz–110MHz
9-digit LED Display – Excellent Condition **£1250**

MATRIX 3000 COLOUR GRAPHICS RECORDER + M^2 Matrix Monitor
Takes RGB+Composite+BW Video inputs
and has CAMERA (still). Mount to Photograph Images.
Incl. Service Manual. 1 only – **£525**

ORTEC BROOKDEAL ORTHOLOC SC 9505
Two-phase lock-in analysers. 3 only.
Excellent condition. **£220**

VU-DATA MULTISCOPE. 7 Micro-sized Scopes (each removable)
in one frame. **£160**

MARCONI TF2008 SIG GENS 10kHz–520MHz AM FM
CALIBRATION VERIFIED **£325**

All prices excluding VAT & carriage.

CIRCLE NO. 147 ON REPLY CARD

In the concluding part of his article Terence Finnegan completes his examination of the operation of power mosfets from first principles.

Going linear with power mosfets

PART 2 OF 2

The charge-control analysis (see *Theoretical behaviour of the drain current, last issue*) shows the two separate regions of the drain transfer characteristics. When V_D is small compared to V_G, the expression $I_D=\beta(V_G-V_T)V_D$ defines the drain current, which represents an effective resistance between the drain and source of: $R_{DS(on)}=1/\beta(V_G-V_T)$. Thus $R_{DS(on)}$ is linearly related to the gate voltage. This is characteristic of all mosfets, so the drain-source resistance can be used as a gate-controlled variable resistor, in AGC and other control loops, for example.

As the drain voltage is increased, the simplifications used to derive these expressions no longer apply. The initial increase in drain voltage from zero is impressed across the channel length, essentially to counteract the gate field Q_n in the channel, which is greater near the source than it is near the drain. When the drain voltage reaches (V_G-V_T) an equilibrium condition is reached and the drain end of the channel is then blocked or "pinched off". With any further increase in V_D, the voltage across the channel remains sensibly constant at (V_G-V_T) and the additional voltage will appear across the depletion region, which forms at the drain.

The secret of all mosfet manufacture is to prevent, as far as possible, the drain depletion region from interfering with the channel conduction process – the purpose of the n$^-$ epitaxial layer. A more accurate expression for the drain current below saturation is:

$$I_D=\beta\left\{(V_G-V_T)V_D-\frac{V_D^2}{2}\right\}$$

When plotted, this expression leads to a succession of parabolas for I_D versus V_D, for differing values of (V_G-V_T), as shown in **Fig. 7**. These parabolas all have maxima at drain voltages equal to V_{Dsat}, where $V_{Dsat}=(V_G-V_T)$. The drain current reaches a saturation value at V_{Dsat} and remains approximately constant thereafter, independent of V_D. The locus of V_{Dsat}, shown dotted in Fig. 7, is itself a parabola.

Derivation of drain output characteristic

Linear analysis only concerns itself with the device characteristics in saturation, ie above the pinch-off voltage V_{Dsat}. In general, complete saturation of the drain current beyond V_{Dsat} will only occur in mosfets with very large channel lengths – unless special steps are taken in the device design. As the drain-source spacing is reduced, the saturation properties deteriorate from two causes:

- Modulation of the channel length by the spreading of the drain depletion region into the channel.
- Electrostatic feedback of the drain field into the channel.

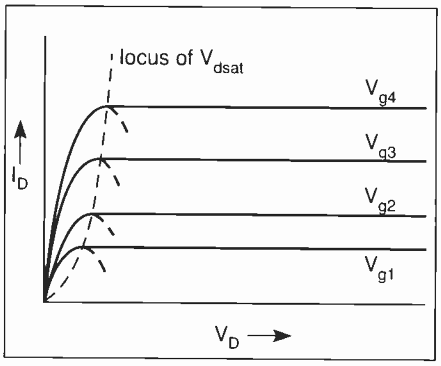

Fig. 7. Derivation of the drain output characteristic. The locus of V_{Dsat} is a parabola.

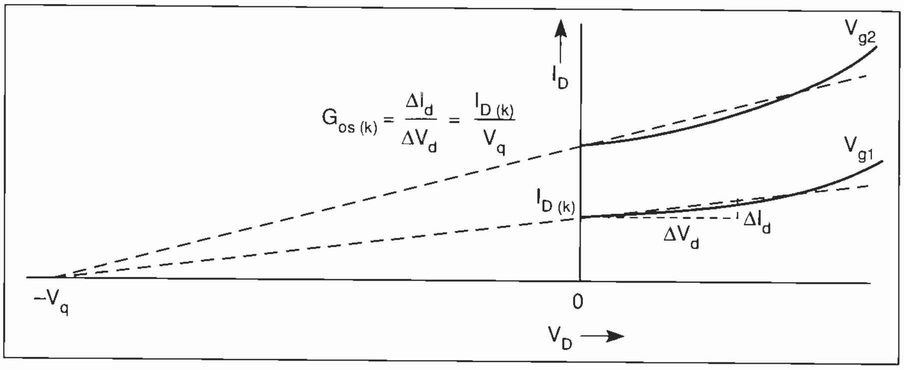

Fig. 8. Determination of the drain output conductance in terms of the intercept voltage V_q

Modulation

A depletion region will form at the drain end of the channel and will spread towards the source end with increasing drain voltage. This will reduce the effective channel length, in turn decreasing its resistance so that the saturated drain current will increase. Effect on the saturated drain current can be modelled by:

$$I_{Dsat} = \frac{I_{Dsat_{(0)}}}{1 - \frac{\mathrm{d}L}{L}}$$

where dL denotes the width of the depletion region at the drain end of the channel and $I_{Dsat(0)}$ is the value of I_D at the projection onto the $V_D = 0$ axis, for a particular value of V_G. From simple PN-junction theory, $\delta L = k_1\sqrt{V_D}$ for values of $V_D > V_{Dsat}$, and so I_{Dsat} is given by:

$$I_{Dsat} = \frac{I_{Dsat_{(0)}}}{1 - \frac{k_1\sqrt{V_D}}{L}} = \frac{I_{Dsat_{(0)}}}{1 - k_2\sqrt{V_D}}$$

where k_1 and k_2 are constants.

When plotted, the curves of I_{Dsat} (at differing values of V_G) will gradually turn upwards with increasing V_D, so the incremental drain output conductance will gradually increase with drain voltage, as shown, exaggerated, in **Fig. 8**. These curves can be approximated by straight lines which, when projected backwards, will meet the $-V_D$ axis at a voltage $-V_q$. (In practice the lines do not project to a point as shown, but meet the $-V_D$ axis within a small segment about $-V_q$.) Voltage V_q is an intercept voltage, and is almost equivalent to the Early intercept voltage for bipolar devices: the Early voltage in bipolar devices is due to depletion layer widening in the base region, whereas this intercept voltage is due to depletion layer widening at the drain.

The depletion region will develop at the drain in the lightly doped n$^-$ epitaxial layer and so will grow away from the channel and minimise effects of channel shortening. This is the function of the n$^-$ epitaxial layer, which is carefully controlled in switching devices to balance the conflicting needs of breakdown voltage and $R_{DS(on)}$. If the epitaxial layer is too thick, the on-resistance will be too high in relation to the voltage specification. If too thin, the epitaxial layer will punch through below the desired voltage rating. But since $R_{DS(on)}$ is of no interest in linear design, it should be possible to adjust the doping of the n$^-$ epitaxial layer for a family of linear devices, further minimising channel shortening and increasing the saturated drain resistance.

From the projected curves in Fig. 8, the incremental drain conductance $G_{os(k)}$ at a particular value of I_D, say $I_{D(k)}$, is given by $I_{D(k)}=V_q.G_{os(k)}$;. G_{os} can either be derived by projection from published manufacturer data, or careful measurements can be made on a particular device to determine G_{os} at particular values of I_D.

SUMMARY OF FORMULA

Oxide capacitance	$C_{ox} = \frac{\varepsilon_{ox}}{T_{ox}} = \frac{\varepsilon_0\varepsilon_r}{T_{ox}}$
Theoretical mosfet gain (n-channel)	$\beta = \frac{\mu_n C_{ox} W}{L}$
Drain current (V_D below pinch-off)	$I_D = \beta\left[(V_G - V_T)V_D - \frac{V_D^2}{2}\right]$
Saturated drain current (V_D above pinch-off, square-law region)	$I_{Dsat} = \frac{\beta}{2}(V_G - V_T)^2$ or $I_{Dsat} = \frac{\beta}{2}\frac{(V_G - V_T)^2}{[1+\theta(V_G - V_T)]}$
Saturated drain current (velocity saturation)	$I_{Dsat} = \frac{1}{2}\mu_n C_{ox} W v_{sat}(V_G - V_T)$
Transconductance (square-law region)	$G_{fs} = \beta(V_G - V_T)$ $= \sqrt{2\beta I_{Dsat}}$
Practical transconductance with modulation coefficient	$G_{fs} = \frac{\beta}{2}\left\{\frac{2(V_G - V_T) + \theta(V_G - V_T)^2}{[1+\theta(V_G - V_T)]^2}\right\}$ $\approx \frac{\beta}{2}\left\{2(V_G - V_T) - 3(V_G - V_T)^2\right\}$ $\approx \sqrt{2\beta I_{Dsat}} - 3\theta I_{Dsat}$
Transconductance (velocity saturation)	$G_{fs} = \frac{1}{2}C_{ox} W v_{sat}$
Drain output conductance	$G_{os} = \frac{I_{Dsat}}{V_q}$
Amplification factor (square-law region, simple formula)	$\mu = V_q\sqrt{\frac{2\beta}{I_{Dsat}}}$
Amplification factor (velocity saturation)	$\mu = \frac{V_q C_{ox} W v_{sat}}{2I_{Dsat}}$
Threshold voltage (n-channel)	$V_T = -\phi_{MS} - \frac{Q_{ss}}{C_{ox}} + \frac{Q_d}{C_{ox}} + 2\phi_F$
Variation with temperature (n-channel)	$\frac{\mathrm{d}V_T}{\mathrm{d}T} \approx \frac{1}{T}\left\{\left(\phi_F - \frac{E_{G0}}{2q}\right)\left(\frac{Q_d}{2C_{ox}\phi_F} + 2\right)\right\}$
Maximum operating frequency	$f_{max} = \frac{3\mu_n(V_G - V_T)}{8\pi L^2}$ $= \frac{3G_{fs}}{8\pi C_{Gch}}$
Fermi voltage	$\phi_F = \frac{kT}{q}\ln\frac{N_A}{n_i}$
Depletion region width (step junction)	$W = \sqrt{\frac{2\varepsilon_0\varepsilon_r V_R}{qN_A}}$ for $V_R > 0.6V$ and $N_D > N_A$ $= k_1\sqrt{V_R}$

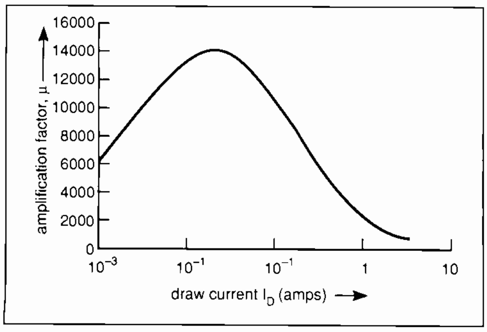

Fig. 9. Variation of amplification factor* μ *with drain current for IRF510 @ 25°C.

Feedback

Channel length modulation by spreading of the drain depletion region is usually the dominant effect for mosfets fabricated on low-resistivity substrates – which probably includes all power mosfets. But for devices fabricated on moderately-high resistivity substrates, when the depletion region width becomes comparable with the drain-source spacing, another mechanism dominates, adding to channel length modulation and giving a further reduction in drain resistance at saturation.

The effect is due to capacitive coupling from the drain electrode to the channel. Electric field lines from the drain can extend through the drain depletion region and end in the channel. As the drain voltage is increased, the electron population in the n-type channel must also increase to terminate completely the now larger field. So the drain electrode actually acts as a second gate in controlling the drain-source conductance.

On the other hand, the depletion region width for a low resistivity substrate is less than the drain-source spacing and this acts as an electrostatic shield, effectively decoupling the drain field from the channel.

When the electrostatic feedback mechanism is dominant, the drain conductance in the saturation region is given by equation (5) where C_{Dch} is the total effective coupling capacitance between the drain and the channel. But the transconductance G_{fs} is given by equation (6). Hence the effective amplification factor for the mosfet in this condition, which equals G_{fs}/G_{os}, is given in equation (7), where C_{tox} is the total oxide capacitance from the gate to the channel.

$$G_{os} = \frac{\mu_n C_{Dch}\left(V_G - V_T\right)}{L^2} \qquad (5)$$

$$G_{fs} = \frac{\mu_n C_{ox} W\left(V_G - V_T\right)}{L} \qquad (6)$$

$$\mu = \frac{C_{ox} WL}{C_{Dch}} = \frac{C_{tox}}{C_{Dch}} \qquad (7)$$

Interestingly, this expression is effectively identical to that for a planar triode valve, for which $\mu = C_{gk}/C_{ak}$.

Amplification factor

Mosfets have an amplification factor μ defined similarly to pentode valves, where $\mu = G_{fs}/G_{os}$.

We saw, last issue, that in the *square-law region* and for $V_D > V_{Dsat}$, we have the fundamental relationships, in their simplified form:

$$I_D = \frac{\beta}{2}\left(V_G - V_T\right)^2$$

and

$$G_{fs} = \beta\left(V_G - V_T\right)$$
$$= \sqrt{2\beta I_{Dsat}}$$

But $G_{OS} = I_{Dsat} / V_q$, so

$$\mu = \frac{G_{fs}}{G_{os}} = \frac{V_q\sqrt{2\beta I_{Dsat}}}{I_{Dsat}}$$

$$\mu = V_q\sqrt{\frac{2\beta}{I_{Dsat}}}$$

whereas in the *velocity saturation* region

$$\mu = \frac{V_q C_{ox} W v_{sat}}{2 I_{Dsat}}$$

because in the velocity saturation region,
$I_{Dsat} = 0.5 C_{OX} W.v_{sat}(V_G - V_T)$ and
$G_{fs} = 0.5 C_{OX} W.v_{sat}$

As the current is reduced, the amplification factor increases since G_{os} is decreasing faster than G_{fs}, but this cannot continue indefinitely, as G_{fs} must equal zero when I_D is zero. G_{os} also has a lower limit, set by the channel leakage currents when V_G=0. Maximum value of R_{os}, when V_G=0, is about 1M, depending on device.

The amplification factor therefore peaks at some value of I_D as shown in **Fig. 9**, which shows the predicted amplification factor for the *IRF510*. The factor has a peak value of about 14,000, when I_D = 20mA, with $G_{fs} \cong 0.11$A/V and $R_{os} \cong 130$k. It is higher than that for bipolar devices, which have maximum gains in the order of 6,000, limited usually by h_{re}.

Factors G_{fs}, β, μ, and V_q have been derived using the simple theory for a variety of power mosfets operating in the square-law region and these are shown in **Table 2**. Interestingly the channel shortening factor $\delta L/L$ varies from 4.3% to 5.6%; V_q varies between 17 and 24 times the value of V_{DSS}; and devices with the larger values for V_{DSS} also have higher amplification factors.

N-channel/p-channel differences

Mosfet characteristics depend heavily on the surface at the silicon-silicon dioxide interface. Transition at the interface from semiconductor to insulator is so drastic that many of the properties used to describe semiconductor operation need modification to define the overall action accurately.

Current flowing in a mosfet is directly proportional to effective mobility of the carriers in the channel as they travel from the source to the drain under influence of the gate voltage. The gate silicon dioxide insulator is typically 1000Å thick. An applied gate voltage of 10V creates a field strength of 10^6V/cm across the insulator, attracting carriers to the surface, which then continually bounce off the interface as they travel down the channel. So surface mobility in the channel is considerably less than that normally occurring in bulk silicon, due to interface scattering.

Many of the differences between n-channel and p-channel devices can be ascribed to this interface. But the main factor is the difference in channel mobility. Electron mobility in n-type material is 1370cm^2/V-s, while hole mobility in p-type material is only 480cm^2/V-s – both figures applying at doping concentrations of 10^{15}/cm^3 and 300°K.

Actual channel mobilities are only about 1/3 of these values, due to scattering at the interface. So the gain β of p-channel devices is lower, by typically a factor of 2.5, leading to lower values of G_{fs}. The lower mobility also means that p-channel devices have a higher transit time and practical devices more easily reach saturation velocity, so that the transconductance curves flatten out at lower values of drain current.

Table 3 shows a comparison between complementary pairs *IRF640* and *IRF9640*.

There is also a considerable difference in the theoretical threshold voltage between the devices. The threshold voltage for an n-channel mosfet with a phosphorus-doped polysilicon gate is given as

$$V_T = -\phi_{MS} - \frac{Q_{ss}}{C_{ox}} + \frac{Q_d}{C_{ox}} + 2\phi_F$$

while

Table 2. Mosfet characteristics at 25°C (taken from International Rectifier data).

Part	Die size	Rating	Theoretical gain, β (A/V^2)	Actual gain, β (A/V^2)	Mobility modⁿ factor, θ (1/V)	Mutual cond G_{fs} (A/V)	Amp factor μ	Intercept voltage V_q (V)	Threshold voltage V_T (V)	dV_T/dT (mV/°C)
IRF510	Hex 1	100V, 5A	1.8	1.3	0.11	$1.2\sqrt{I_D}$	$3000/\sqrt{I_D}$	–2400	3.4	–6.3
IRF710	Hex 1	400V, 1A	1.8	1.1	0.03	$1.3\sqrt{I_D}$	$13000/\sqrt{I_D}$	–9800	3.3	–4.8
IRF045	Hex 5	60V, 53A	28.0	16.5	0.11	$4.0\sqrt{I_D}$	$5000/\sqrt{I_D}$	–1300	3.5	–6.0
IRF460	Hex 5	500V, 21A	28.0	18.1	0.02	$16.0\sqrt{I_D}$	$50000/\sqrt{I_D}$	–8400	3.6	–6.4

Table 3. Comparison between complementary pairs IRF640 and IRF9640.

		IRF640	***IRF9640***
ß	A/V^2	5.1	–3.7
G_{fs}	A/V	$3.2\sqrt{I_D}$	$-2.6\sqrt{I_D}$
V_T	V	3.7	–3.65
dV_T/dT	mV/°C	–7.6	7.5
µ		$16{,}300/\sqrt{I_D}$	$37{,}000/\sqrt{I_D}$

$$V_T = \phi_{MS} - \frac{Q_{ss}}{C_{ox}} - \frac{Q_d}{C_{ox}} - 2\phi_F$$

is the threshold voltage for a p-channel mosfet with a boron-doped polysilicon gate.

In both expressions, the terms are all taken as magnitudes having positive values where ϕ_{MS} is the difference in work function between the polysilicon gate and the semiconductor surface: Q_{ss} is a fixed positive surface-state charge density caused by imperfections in the oxide-semiconductor interface; Qd is the depletion layer charge density and ϕ_F is the Fermi voltage needed to invert the surface and create the channel.

Since there are only two positive terms in the n-channel expression but three negative terms in the p-channel expression, it is much easier to make enhancement mode p-channel devices, needing negative gate voltages, than it is to make enhancement mode n-channel devices, needing positive gate voltages – unless high levels of doping are used. This is the reason why small signal p-channel enhancement mode fets were developed first. But the advantage is now more than offset by the difference in mobility. Technology now favours n-channel devices – coupled with the use of <100> oriented silicon crystal to increase the mobility further and reduce surface-state charge density Q_{ss}. Hole mobility is improved with the use of <111> oriented silicon for p-channel devices, but this does not give the added reduction in Q_{ss}. Precise threshold voltage control for n-channel devices is achieved through ion implantation techniques which accurately set the required value of Q_d, for all values of substrate doping.

Both types also suffer from fixed and mobile ionic charges located within the silicon dioxide, due to sodium contamination during fabrication. Mobile ions cause severe instability in device performance, particularly in shifts in the threshold voltage, but the problem is sometimes overcome by making the gate insulator from 600Å of silicon dioxide followed by 400Å of silicon nitride.

For n-channel devices, the mobile Na^+ ions migrate toward the interface under the continual action of the positive gate voltage and cause instability in the threshold voltage. But for p-channel devices, the mobile Na^+ ions migrate away from the interface and towards the gate electrode under the continual action of the negative gate voltage. Here they do not affect the threshold voltage, so that p-channel devices are potentially more stable than n-channel devices.

But with today's fabrication technology, long-term threshold voltage stability for both types will be within a few tenths of a volt at junction temperatures of 125°C and +15V gate bias.

Difference in mobility and consequent tendency for p-channel devices to achieve earlier velocity saturation at lower gate voltages means that the drain output resistance is also higher. Drain current is unable to increase above the value set by the velocity saturation, even when the drain voltage is increased. Hence p-channel devices usually have higher values for R_{os} (lower G_{os}), more than making up for the lower G_{fs} when deriving the amplification factor. The tendency to velocity saturation also shows up in the slightly strange shape of the I_D vs V_D curves for some devices. See for example the curves for the *IRF9630* and *IRF9230* and the sharp knee at V_{Dsat} for the *IRF9640*.

The temperature differences between the two types was discussed last issue (Variation of the transfer characteristic with temperature).

High frequency performance

In general, silicon bipolar transistors are capable of operating at much higher frequencies when compared to conventional silicon mosfets in circuit. There are three major reasons for this: mosfets have appreciable gate-drain capacitance, reducing the high frequency gain due to the Miller effect; power mosfets have a very high gate-source input capacitance; and transconductance per unit area of a mosfet is less than that of a bipolar transistor operating at the same current.

If G_{fs}/C_{in} is used as the usual figure-of-merit, it is clearly less than for a comparable bipolar device – by a significant amount. Where mosfets do score over bipolar devices, of course, is in switching speed, since there are no minority base carriers to cause switching delays. The intrinsic limit on speed of response of the device itself is the time needed to transport the charge along the channel. When the device is operated in current saturation, the transit time is about 3 x 10^{-11}s for a typical power mosfet – probably two orders of magnitude faster than attainable in practical circuits. So the actual in-circuit switching speed is set by the external ability to charge and discharge the capacitances associated with the device, rather than by the device itself.

Figure 10 represents the three-terminal equivalent circuit for a mosfet, suitable up to about 5MHz. Above this frequency, the parasitic lead inductances and other second order effects must be included. C_{in} is the parallel combination of the gate-source capacitance and the gate-channel capacitance C_{Gch}. C_{in} is deduced from the data sheets as $C_{in} = C_{iss} - C_{rss}$.

The circuit in **Fig. 11** shows the mosfet connected as a simple linear amplifier, ignoring the bias components, together with an equivalent circuit (**Fig. 12**) containing only admittances and with the voltage source replaced by the equivalent Norton current source.

Following Richman's analysis[1], the incremental amplifier gain for this circuit is given by equation (8) and for a power mosfet, the following conditions usually apply: $C_{in}>C_{oss}>C_{rss}$, and $G_{fs}>Y_2$. Hence $Y_1>Y_2$ and $Y_1Y_3>Y_1Y_2+Y_2Y_3$. Applying these conditions simplifies equation (8) as a first step to equation (9).

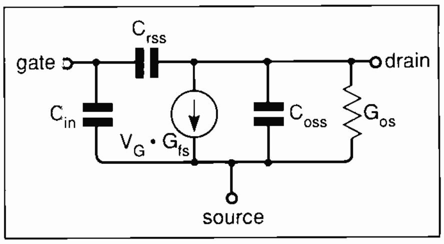

Fig. 10. Three-terminal equivalent circuit for a mosfet, suitable up to about 5MHz.

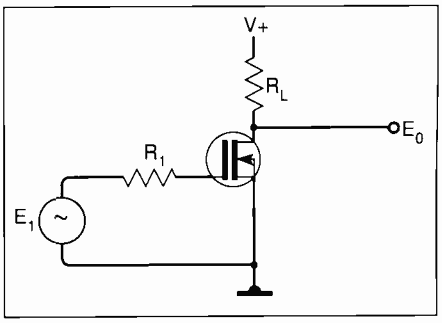

Fig. 11. Connecting a mosfet as a linear amplifier.

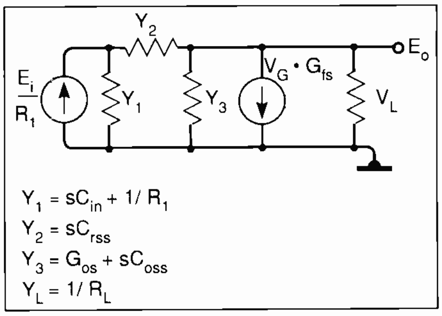

Fig.12. Equivalent circuit. $Y_1=sC_{in}+1/R_1$, $Y_2=sC_{rss}$, $Y_3=G_{os}+sC_{oss}$, $Y_L=1/RL$

Substituting $\tau_1 = R_1.C_{in}$ so that $Y_1=(1+s\tau_1)/R_1$, $\tau_2 = C_{oss}/G_{os}$, and $\tau_3 = R_1.C_{rss}$ so that $Y_3=G_{os}(1+s\tau_2)$ yields equation (10).

Now in normal circumstances, $G_{fs}\tau_3 > G_{os}\sqrt{(\tau_1\tau_2)}$, so to a first order, the term in s^2 will have little effect on the frequency response and neglecting it further simplifies the gain expression to its final form of equation (11), at DC equal to equation (12).

$$G = \frac{Y_2 - G_{fs}}{R_1\left\{Y_1Y_3 + Y_1Y_2 + Y_2Y_3 + Y_L\left(Y_1 + Y_2\right) + G_{fs}Y_2\right\}} \tag{8}$$

$$G = \frac{-G_{fs}}{R_1\left(Y_1Y_3 + Y_1Y_l + G_{fs}Y_2\right)} \tag{9}$$

$$G = \frac{-G_{fs}}{s^2G_{os}\tau_1\tau_2 + sG_{fs}\tau_3 + G_{os} + Y_l} \tag{10}$$

$$G = \frac{-G_{fs}}{sG_{fs}\tau_3 + G_{os} + Y_L} \tag{11}$$

$$G = \frac{-G_{fs}}{G_{os} + Y_L} \tag{12}$$

The final expression for gain shows a corner frequency given by:

$$f_{(3dB)} = \frac{G_{os} + Y_L}{2\pi G_{fs}\tau_3}$$

Hence gain-bandwidth figure of merit is

$$GB = \frac{1}{2\pi\tau_3} = \frac{1}{2\pi R_1 C_{rss}}$$

This somewhat surprising result follows from the high $G_{fs}.C_{rss}$ product common to power mosfets, swamping the usual limitations imposed by the output circuit time-constant. High frequency performance of all power mosfets is therefore governed by the source resistance coupled with the gate-drain feedback capacitance. In all designs, whether linear or switching, the gain-bandwidth of the active element is the deciding factor. So a mosfet should be chosen with the minimum C_{rs}, usually meaning using the smallest possible die size within the constraints of the current or power needs. Higher voltage devices, with their lower doping, also tend to have the lower capacitances. (Note that resistance of the polysilicon gate is about 1-2Ω and should be included in the input circuit resistance.)

Transit time considerations

The gate-drain capacitance is a parasitic element, due to the small overlap of the gate over the drain connection. For a perfectly self-aligned mosfet structure in which the effects of the parasitic gate-drain, gate-source and drain-substrate capacitances are negligible, the maximum frequency of operation will be limited by the carrier transit time.

Under these conditions, the maximum operating frequency will be $f_{max}=1/(2\pi T_{tr})$. Carrier transit time in the square-law region is derived, (using the same reasoning as in Theoretical behaviour of the drain current, last issue) when V_D is small, as:

$$T_n = \frac{4L^2}{3\mu_n(V_G - V_T)}$$

Maximum operating frequency is

$$f_{max} = \frac{3\mu_n(V_G - V_T)}{8\pi L^2}$$

But

$$G_{fs} = \frac{\mu_n C_{ox} W}{L}(V_G - V_T)$$

Hence

$$f_{max} = \frac{3G_{fs}}{8\pi C_{tox}} = \frac{3G_{fs}}{8\pi C_{Gch}}$$

(C_{tox} equals C_{Gch} in this case since all parasitic elements are negligible.)

For the *IRF840*, with μ_n=450cm^2/V-s, L=1.2μm and (V_G-V_T) =1.5V, then T_n=3 x 10^{-11}s and f_{max}=5.4GHz. The channel capacitance C_{Gch} equals 154pf at a transconductance of 7.2A/V. A survey of IR mosfets covering various ratings shows a maximum operating frequency of about 1.3GHz for all devices, where the value of C_{in} instead of the unknown C_{Gch} was used in the above expression. ■

References

1. Richman, P. "Mos Field-Effect Transistors and Integrated Circuits", Wiley 1973.
2. Muller, R S and Kamins, T I. "Device Electronics for Integrated Circuits", Wiley 1986.
3. Grove, A S. "Physics and Technology of Semiconductor Devices", Wiley 1967.
4. The Staff of Siliconix Inc. "Mospower Applications Handbook", Siliconix 1985.
5. International Rectifier, "Hexfet Power mosfet Designers Manual", 1987.

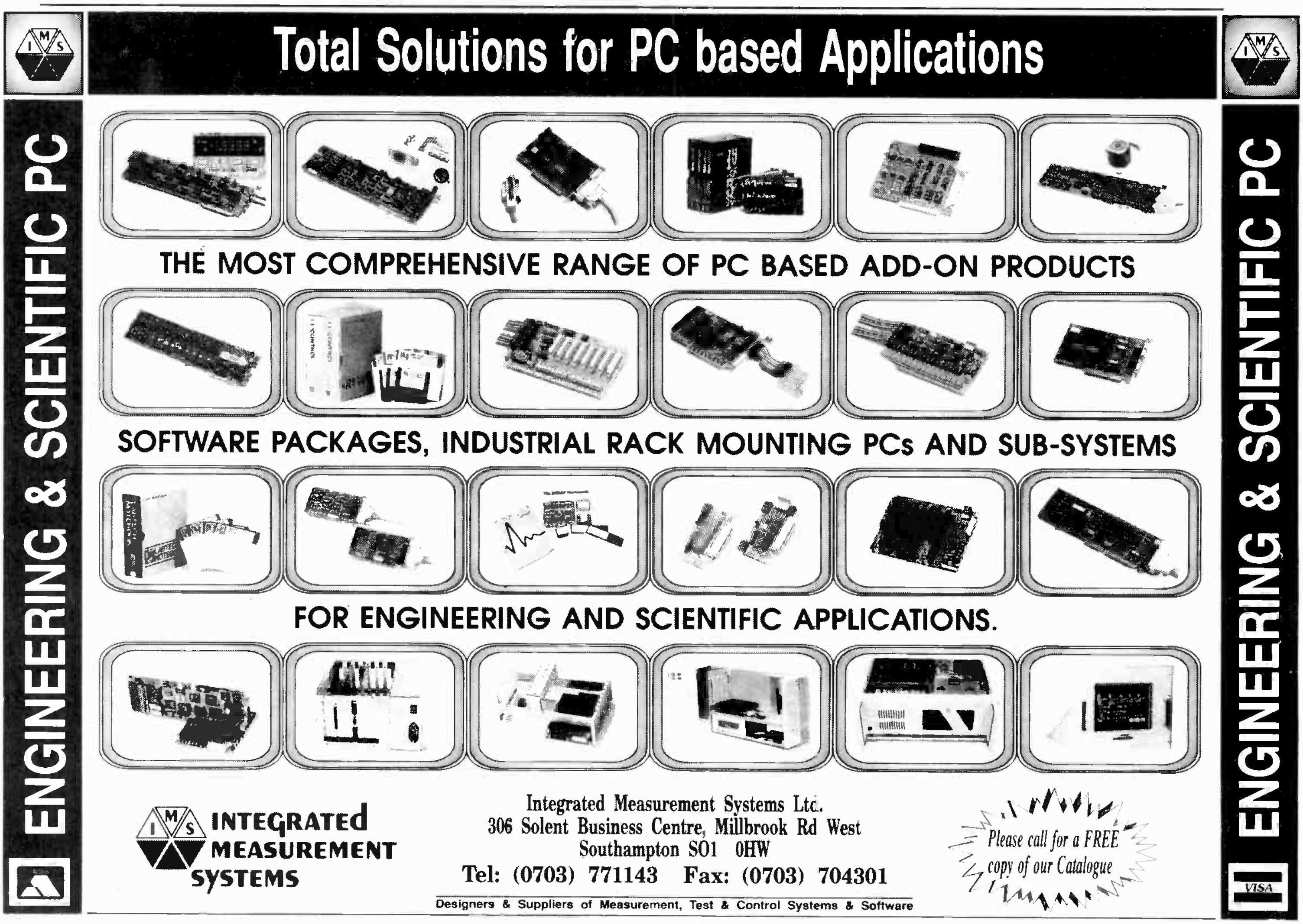

AMSTRAD PORTABLE PC'S FROM £149 (PPC1512SD). £179 (PPC1512DD). £179 (PPC1640SD). £209 (PPC1640DD). MODEMS £30 EXTRA.NO MANUALS OR PSU.

HIGH POWER CAR SPEAKERS. Stereo pair output 100w each. 4ohm impedance and consisting of 6 1/2" woofer 2" mid range and 1" tweeter Ideal to work with the amplifier described above Price per pair £30.00 Order ref 30P7R.

MICROWAVE CONTROL PANEL. Mains operated, with touch switches. Complete with 4 digit display, digital clock, and 2 relay outputs one for power and one for pulsed power (programmable) Ideal for all sorts of precision timer applications etc. **Now only £4.00 ref 4P151.**

FIBRE OPTIC CABLE. Stranded optical fibres sheathed in black PVC. Five metre length £7.00 ref 7P29R

12V SOLAR CELL. 200mA output ideal for trickle charging etc. 300 mm square. Our price £15 00 ref 15P42R

PASSIVE INFRA-RED MOTION SENSOR. Complete with daylight sensor, adjustable lights on timer (8 secs -15 mins), 50' range with a 90 deg coverage Manual override facility Complete with wall brackets, bulb holders etc. Brand new and guaranteed **Now only £19.00 ref 19P29**

Pack of two PAR38 bulbs for above unit £12.00 ref 12P43R

VIDEO SENDER UNIT Transmit both audio and video signals from either a video camera, video recorder or computer to any standard TV set within a 100' range! (tune TV to a spare channel) 12v DC op £15.00 ref 15P39R Suitable mains adaptor £5.00 ref 5P191R

FM TRANSMITTER housed in a standard working 13A adapter (bug is mains driven). £26.00 ref 26P2R

MINATURE RADIO TRANSCEIVERS A pair of walkie talkies with a range of up to 2 kilometres. Units measure 22x52x155mm. Complete with cases. £30.00 ref 30P12R

FM CORDLESS MICROPHONE. Small hand held unit with a 500' range! 2 transmit power levels reqs PP3 battery Tuneable to any FM receiver. Our price £15 ref 15P42AR

12 BAND COMMUNICATIONS RECEIVER. 9 short bands, FM, AM and LW DX/local switch, tuning 'eye' mains or battery Complete with shoulder strap and mains lead **NOW ONLY £19.00!! REF 19P14R.**

CAR STEREO AND FM RADIO Low cost stereo system giving 5 watts per channel. Signal to noise ratio better than 45db, wow and flutter less than 35% Neg earth. £19.00 **ref 19P30**

LOW COST WALIKIE TALKIES. Pair of battery operated units with a range of about 200' Our price £8.00 a pair ref 8P50R

7 CHANNEL GRAPHIC EQUALIZER plus a 60 watt power amp! 20-21KHZ 4-8R 12-14v DC negative earth. Cased. £25 ref 25P14R

NICAD BATTERIES. Brand new top quality 4 x AA's £4.00 ref 4P44R 2 x C's £4.00 ref 4P73R, 4 x D's £9 00 ref 9P12R, 1 x PP3 £6 00 ref 6P35R

TOWERS INTERNATIONAL TRANSISTOR SELECTOR GUIDE. The ultimate equivalents book Latest edition £20 00 ref 20P32R

CABLE TIES. 142mm x 3 2mm white nylon pack of 100 £3 00 ref 3P104R. Bumper pack of 1,000 ties £14 00 ref 14P6R

GOT A CARAVAN OR BOAT?

NEW 80 PAGE FULL COLOUR LEISURE CATALOGUE

2,500 NEW LINES FREE WITH ORDER ON REQUEST

OR SEND £1.00

GEIGER COUNTER KIT. Complete with tube, PCB and all components to build a battery operated geiger counter £39.00 ref 39P1R

FM BUG KIT. New design with PCB embedded coil. Transmits to any FM radio. 9v battery req'd £5.00 ref 5P158R

FM BUG Built and tested superior 9v operation £14 00 ref 14P3R

COMPOSITE VIDEO KITS. These convert composite video into separate H sync, V sync and video. 12v DC £8.00 ref 8P39R.

SINCLAIR C5 MOTORS 12v 29A (full load) 3300 rpm 6"x4" 1/4" O/P shaft. New. £20 00 ref 20P22R.

As above but with fitted 4 to 1 inline reduction box (800rpm) and toothed nylon belt drive cog £40.00 ref 40P8R

ELECTRONIC SPEED CONTROL KIT for c5 motor PCB and all components to build a speed controller (0-95% of speed). Uses pulse width modulation £17 00 ref 17P3R.

SOLAR POWERED NICAD CHARGER. Charges 4 AA nicads in 8 hours Brand new and cased £6.00 ref 6P3R.

ACORN DATA RECORDER ALF503 Made for BBC computer but suitable for others Includes mains adapter, leads and book £15.00 ref 15P43R

VIDEO TAPES. Three hour superior quality tapes made under licence from the famous JVC company. Pack of 5 tapes New low **price £8.00 ref 8P161**

PHILIPS LASER. 2MW HELIUM NEON LASER TUBE. BRAND NEW FULL SPEC £40.00 REF 40P10R. MAINS POWER SUPPLY KIT £20.00 REF 20P33R READY BUILT AND TESTED LASER IN ONE CASE £75.00 REF 75P4R.

12 TO 220V INVERTER KIT As supplied it will handle up to about 15 w at 220v but with a larger transformer it will handle 80 watts. Basic kit £12.00 ref 12P17R. Larger transformer £12 00 ref 12P41R

VERO EASI WIRE PROTOTYPING SYSTEM Ideal for designing projects on etc. Complete with tools, wire and reusable board. **New low bargain price only £2.00 ref B2P1**

HIGH RESOLUTION 12" AMBER MONITOR 12v 1.5A Hercules compatible (TTL input) new and cased £22.00 ref 22P2R

VGA PAPER WHITE MONO monitors new and cased 240v AC. £59.00 ref 59P4R

25 WATT STEREO AMPLIFIER c STK043 With the addition of a handful of components you can build a 25 watt amplifier. £4 00 ref 4P69R (Circuit dia included)

BARGAIN NICADS AAA SIZE 200MAH 1.2V PACK OF 10 £4.00 REF 4P92R, PACK OF 100 £30.00 REF 30P16R

FRESNEL MAGNIFYING LENS 83 x 52mm £1 00 ref BD827R

12V 19A TRANSFORMER. Ex equipment but otherwise ok. Our price £20.00

ULTRASONIC ALARM SYSTEM. Once again in stock these units consist of a detector that plugs into a 13A socket in the area to protect. The receiver plugs into a 13A socket anywhere else on the same supply Ideal for protecting garages, sheds etc Complete system £25.00 ref B25P1 additional detectors £11 00 ref B11P1

IBM AT KEYBOARDS Brand new 86 key keyboards £15 00 ref 15P612

AMSTRAD MP3

UHF/VHF TV RECEIVER/CONVERTER

CONVERTS COLOUR MONITOR INTO A TV!

£9.00

286 MOTHER BOARDS. Brand new and tested complete with technical manual. £49.00 ref **A49P1**

UNIVERSAL BATTERY CHARGER. Takes AA's, C's, D's and PP3 nicads Holds up to 5 batteries at once. New and cased, mains operated £6 00 ref 6P36R.

IN CAR POWER SUPPLY. Plugs into cigar socket and gives 3,4,5,6,7.5,9, and 12v outputs at 800mA. Complete with universal spider plug £5.00 ref 5P167R.

RESISTOR PACK. 10 x 50 values (500 resistors) all 1/4 watt 2% metal film. £5 00 ref 5P170R.

CAPACITOR PACK 1. 100 assorted non electrolytic capacitors £2.00 ref 2P286R

CAPACITOR PACK 2. 40 assorted electrolytic capacitors £2.00 ref 2P287R.

QUICK CUPPA? 12v immersion heater with lead and cigar lighter plug £3.00 ref 3P92R.

LED PACK .50 red leds, 50 green leds and 50 yellow leds all 5mm £8 00 ref 8P52R

AMSTRAD 1640DD BASE UNITS

BRAND NEW AND CASED

TWO BUILT IN 5 1/4" DRIVES

MOTHER BOARD WITH 640K MEMORY

KEYBOARD AND MOUSE

MANUAL

OUR PRICE JUST

£79!!!!

IBM PRINTER LEAD. (D25 to centronics plug) 2 metre parallel. £5 00 ref 5P186R.

COPPER CLAD STRIP BOARD 17" x 4" of 1" pitch "vero" board £4.00 a sheet ref 4P62R or 2 sheets for £7 00 ref 7P22R

STRIP BOARD CUTTING TOOL. £2 00 ref 2P352R

50 METRES OF MAINS CABLE £3.00 2 core black precut in convenient 2 m lengths Ideal for repairs and projects ref 3P91R

4 CORE SCREENED AUDIO CABLE 24 METRES £2.00 Precut into convenient 1 2 m lengths Ref 2P365R

6 1/2" 20 WATT SPEAKER Built in tweeter 4 ohm £5.00 ref 5P205R

WINDUP SOLAR POWERED RADIO! FM/AM radio takes rechargeable batteries complete with hand charger and solar panel 14P200R

PC STYLE POWER SUPPLY Made by AZTEC 110v or 240v input. +5 @ 15A,+12 @ 5A,-12 @ 5A,-5 @ .3A Fully cased with fan, on/off switch, IEC inlet and standard PC flyleads. £15.00 ref F15P4

ALARM PIR SENSORS Standard 12v alarm type sensor will interface to most alarm panels. £16 00 ref 16P200

MODEMS FOR THREE POUNDS!!
Fully cased UK modems designed for dialup system (PSTN) no data or info but only £3.00 ref 3P145R

TELEPHONE HANDSETS
Bargain pack of 10 brand new handsets with mic and speaker only £3.00 ref 3P146R

DATA RECORDERS
Customer returned mains battery units built in mic ideal for Computer or general purpose audio use. Price is £4.00 ref 4P100R

SPECTRUM JOYSTICK INTERFACE
Plugs into 48K Spectrum to provide a standard Atari type joystick port. Our price £4 00 ref 4P101R

ATARI JOYSTICKS
Ok for use with the above interface, our price £4.00 ref 4P102R

BENCH POWER SUPPLIES
Superbly made fully cased (metal) giving 12v at 2A plus a 6V supply Fused and short circuit protected. For sale at less than the cost of the case! Our price is £4 00 ref 4P103R

BULL ELECTRICAL
250 PORTLAND ROAD HOVE SUSSEX
BN3 5QT TELEPHONE 0273 203500
MAIL ORDER TERMS: CASH PO OR CHEQUE WITH ORDER PLUS £3.00 POST PLUS VAT.
PLEASE ALLOW 7 - 10 DAYS FOR DELIVERY
FAX 0273 23077

SOME OF OUR PRODUCTS MAY BE UNLICENSABLE IN THE UK

SPEAKER WIRE
Brown twin core insulated cable 100 feet for £2.00 REF 2P79R

DISC DRIVES
Customer returned units mixed capacities (up to 1.44M) We have not sorted these so you just get the next one on the shelf Price is only £7.00 ref 7P1R (worth it even as a stripper)

MICROSCOPE 1200X MAGNIFICATION
Brand new complete with shrimp hatchery, shrimps, prepared slides, light etc. £29.00 ref J29P4

LIGHT ALARM SYSTEM
Small cased alarms that monitor a narrow beam area for sudden changes in light level. Complete with siren that sounds for a preset time when unit is triggered £7.00 ref J7P1

JOYBALLS
Back in stock popular Commodore/Atari equiv (replace standard joystick) £5.00 ref J5P8

720K 3 1/2" DISC DRIVE
Brand new units made by JVC complete with tech info just £19.00!! ref J19P2

CAR BATTERY CHARGER
Brand new units complete with panel meter and leads. 6 or 12v output £7.00 ref J7P2.

CUSTOMER RETURNED SPECTRUM +2
Complete but sold as seen so may need attention £25 00 ref J25P1 or 2 for £40.00 ref J40P4

CUSTOMER RETURNED SPECTRUM +3
Complete but sold as seen so may need attention £25.00 ref J25P2 or 2 for £40 00 ref J40P5

HEX KEYBOARDS
Brand new units approx 5" x 3" only £1.00 each ref CD42R

PROJECT BOX
51/2" x 31/2" x 1" black ABS with screw on lid. £1.00 ref CD43R

SCART TO SCART LEADS
Bargain price leads at 2 for £3.00 ref 3P147R

SCART TO D TYPE LEADS
Standard Scart on one end, Hi density D type on the other. Pack of ten leads only £7.00 ref 7P2R

OZONE FRIENDLY LATEX
250ml bottle of liquid rubber sets in 2 hours Ideal for mounting PCB's fixing wires etc. £2.00 each ref 2P379R

QUICK SHOTS
Standard Atari compatible hand controller (same as joysticks) our price is 2 for £2 00 ref 2P380R

VIEWDATA SYSTEMS
Brand new units made by TANDATA complete with 1200/75 built in modem infra red remote controlled qwerty keyboard BT approved Prestel compatible, Centronics printer port RGB colour and composite output (works with ordinary television) complete with power supply and fully cased Our price is only £20.00 ref 20P1R

AC STEPDOWN CONVERTOR
Cased units that convert 240v to 110v 3" x 2" with mains input lead and 2 pin American output socket (suitable for resistive loads only) our price £2 00 ref 2P381R

CURLY CABLE
Extends from 8" to 6 feet! D connector on one end, spade connectors on the other ideal for joysticks etc (6 core) £1.00 each ref CD44R

COMPUTER JOYSTICK BARGAIN
Pack of 2 joysticks only £2 00 ref 2P382R

BUGGING TAPE RECORDER
Small hand held cassette recorders that only operate when there is sound then turn off 6 seconds after so you could leave it in a room all day and just record any thing that was said. Price is £20.00 ref 20P3R

NEW SOLAR ENERGY KIT
Contains 8 solar cells, motor, tools, fan etc plus educational booklet. Ideal for the budding enthusiast! Price is £12 00 ref 12P2R

286 AT PC
286 MOTHER BOARD WITH 640K RAM FULL SIZE METAL CASE, TECHNICAL MANUAL, KEYBOARD AND POWER SUPPLY £139 REF 139P1 (no i/o cards or drives included) **Some metal work req'd phone for details.**

35MM CAMERAS Customer returned units with built in flash and 28mm lens **2 for £8.00** ref 8P200

STEAM ENGINE Standard Mamod 1332 engine complete with boiler piston etc £30 ref 30P200

TALKING CLOCK
LCD display, alarm, battery operated Clock will announce the time at the push of a button and when the alarm is due. The alarm is switchable from voice to a cock crowing! £14 00 ref 14P200 R

HANDHELD TONE DIALLERS
Small units that are designed to hold over the mouth piece of a telephone to send MF dialling tones. Ideal for the remote control of answer machines £5.00 ref 5P209R

AMAZING TALKING COINBOX!
Fully programmable talking, lockable coinbox BT approved, retail price is £79 ours is just £29! ref J29P2

ANSWER PHONES £15
Customer returned units with 2 faults one we tell you how to fix the other you do your self! £18 ref J18P2 or 4 for £60 ref J60P3 BT approved (retail price £79 95!! each)

COMMODORE 64 MICRODRIVE SYSTEM
Complete cased brand new drives with cartridge and software 10 times faster than tape machines works with any Commodore 64 setup The orginal price for these was £49.00 but we can offer them to you at only £25 00! Ref 25P1R

90 WATT MAINS MOTORS Ex equipment but ok Good general pupose unit £9.00 ref F9P1

HI FI SPEAKER BARGAIN Originally made for TV sets they consist of a 4" 10 watt4R speaker and a 2" 140R tweeter If you want two of each plus 2 of our crossovers you can have the lot for £5 00 ref F5P2

VIDEO TAPES E180 FIFTY TAPES FOR £70.00 REF F70P1

360K 5 1/4" Brand new drives white front. £20 00 Ref F20P1

EMERGENCY LIGHTING SYSTEM
Fully cased complete with 2 adjustable flood lights. All you need is a standard 6v lead acid battery Our price is just £10 ref J10P29

AMSTRAD 464 COMPUTERS
Customer returned units complete with a monitor for just £35! These units are sold as faulty and are not returnable

IN SUSSEX? CALL IN AND SEE US!

CIRCLE NO. 149 ON REPLY CARD

Single-chip Nicam 728

Toshiba's Application Note X5701 is a useful description of the company's second attempt at a Nicam demodulator. The *TB1204N/F* single-chip version replaces an earlier three-chip set. Versions of the saw and block filters are available for System I (UK and Eire) and Systems B and G for most of Europe.

Figure 1 shows the bare bones of the demodulator. Admittedly other chips are used, but demodulation is all done by the *TB1204N/F* with the summing amplifier being either an IC type or discrete.

A four-phase or differential quadrature phase-shift keyed (DQPSK) signal is presented to the 1204, via a Toko bandpass filter. The filter gets rid of the primary FM sound carrier and remaining video from the *TA8712N* picture and sound IF amplifier. The signal first encounters the DQPSK demodulator (**Fig. 2**), which may need an extra gain stage before the bandpass filter to give 150mV pk-pk. A voltage-controlled filter in a Costas loop phase-locks to the carrier and extracts the data-sliced I and Q signals. A further VCO, divided by 16, gives the 728kHz needed to phase-lock to the recovered data.

In Nicam decoding, frame sync is followed by descrambling and de-interleaving of 704 bits of information to give 64 compressed 10-bit samples. 10-to-14 expansion is then performed along with possible correction, by means of averaging, if there is a parity or range error . A digital filter then eliminates anything over 16kHz and reconstructs the digital audio.

Digital de-emphasis conforming to CCITT J.17 follows and a sigma-delta D-to-A converter produces left and right analogue audio in true and inverted forms. These can be taken to the two inputs of an external final op-amp to reduce distortion; the op-amp is either a discrete type (**Fig. 3**) or the Toshiba *TA2009P* integrated amplifier designed for this purpose. Channel switching and analogue and digital muting facilities are provided.

Toshiba Electronics (UK) Ltd, *Riverside Way, Camberley, Surrey GU15 3YA. Telephone 0276 694600.*

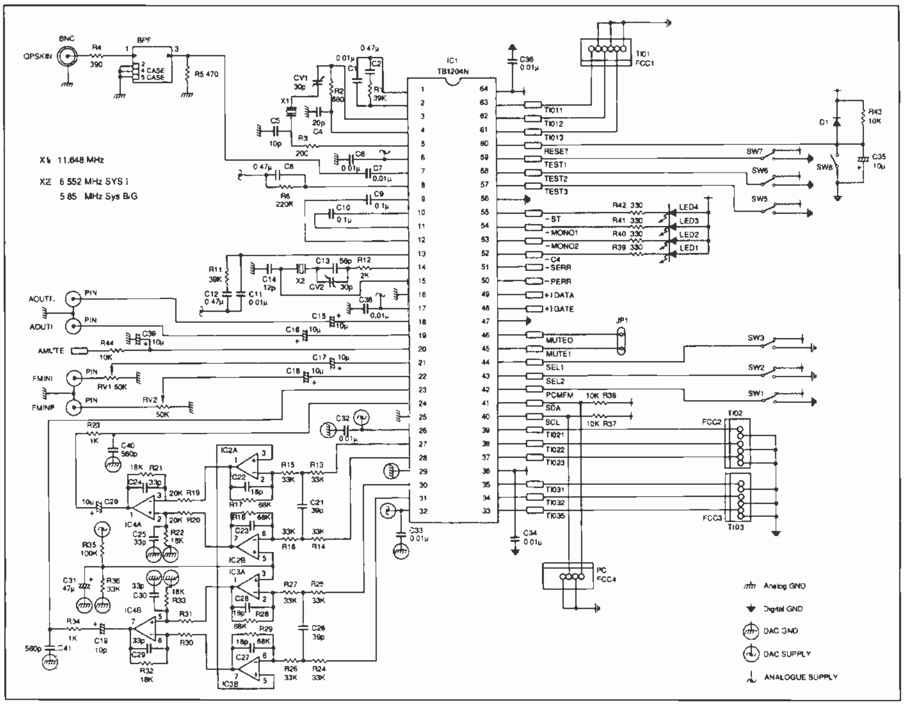

Fig.3. Complete circuit of Toshiba Nicam decoder, in this case using discrete op-amps for audio output (pins 27, 28, 30, 31). The TA2009P IC is designed for this job.

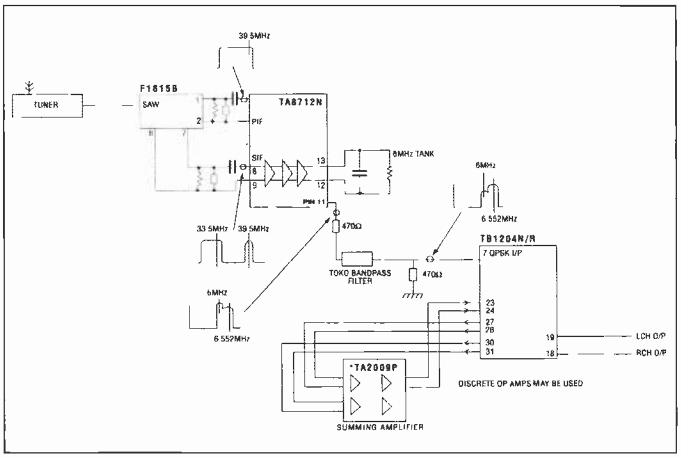

Fig. 1. Toshiba's TB1204N/R terrestrial Nicam 728 decoder and its associated circuitry, incorporating QPSK demodulation, PCM decoder, memory, D-to-A conversion and de-emphasis.

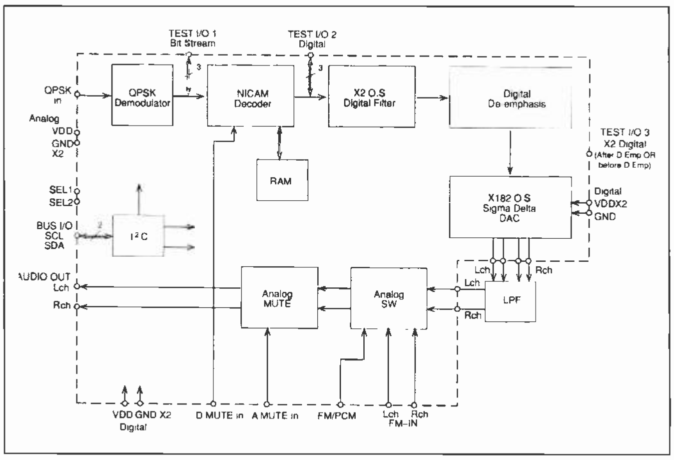

Fig.2. Internals of the TB1204. Ram is used for de-interleaving sound and parity/range bits.

Op-Swaps

Burr-Brown's swop is a switchable-input op-amp, and is described in the company's Design Update, Summer 1991. Effectively, it is an op-amp with a double-pole, double-throw switch to select one of two front ends, as in **Fig. 1**. Switching between the two is accomplished in a matter of a few nanoseconds by TTL (*OPA676*) or ECL (*OPA675*) inputs. The devices can be used for multiplexing or, with different feedback networks for each channel, as programmed-gain amplifiers.

Figure 2, for example, shows a multiplexer. Gain for each channel is determined in the normal way by external feedback resistors, in this case both channels having the same gain without recourse to precision resistors.

If different gains are needed in each channel, separate feedback networks can be used, as in **Fig. 3**. Since the compensation capacitor is common to both channels, it must be sufficient to stabilise the lowest-gain channel. Resistor R_7 is needed to make the noise gain 10, even though signal gain is 2, so that the value of C_I can be 6.5pF instead of the 35pF needed for a gain of 2. With its inputs connected together, this circuit becomes a programmed-gain amplifier, which will function also as a gated amplifier or noise blanker for RF.

Three swops make the four-channel multiplexer in **Fig. 4**, using three of the Fig. 2 circuits and two channel-select bits. Any of the channels can be made inverting or non-inverting, with or without filtering.

For best compensation, each channel should have its gain split equally between A_I/A_2 and A_3, so that all amplifiers can be compensated for maximum bandwidth. If channels need widely different gains, group high gains on A_I and low gain on A_2, so that A_I has low-value compensation for wide bandwidth.

Burr-Brown International Ltd, 1 Millfield House, Woodshots Meadow, Watford, Hertfordshire WD1 8YX. Telephone 923 33837.

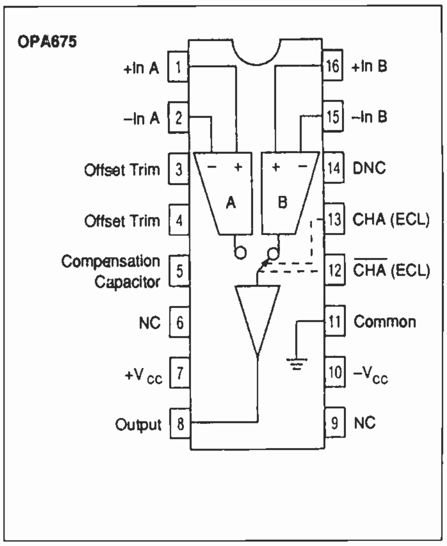

Fig. 1. Internal arrangement of Burr-Brown's OPA675 switched-input op-amp (swop). OPA676 is identical, but is switched by a TTL input. In either case, switching takes only 6ns maximum.

Fig. 3. Two channels with gains of 10 and 2. If inputs are connected together, result is a programmed-gain amplifier.

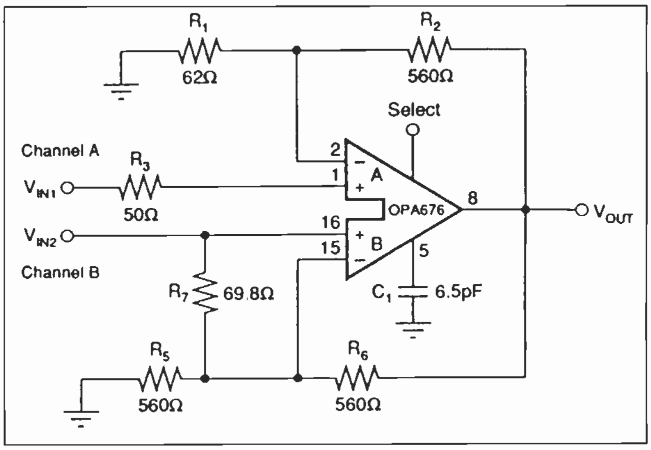

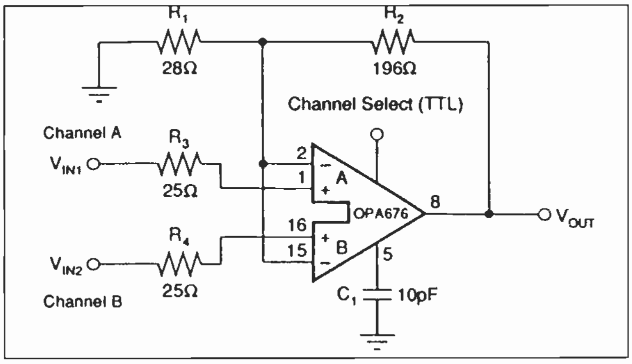

Fig. 2. A swop used as a two-channel multiplexer with gains of 8 in each channel. Since feedback network is common, gains are identical with no need for precision resistors.

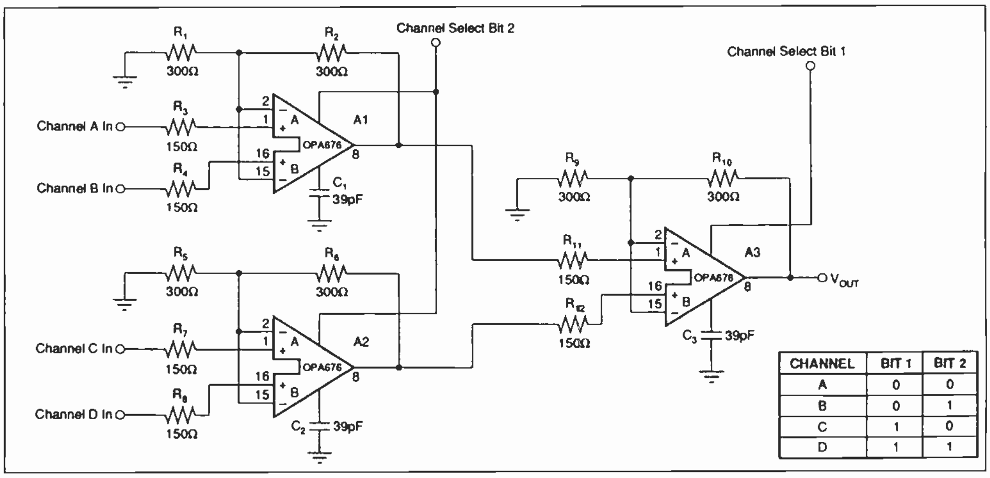

CHANNEL	BIT 1	BIT 2
A	0	0
B	0	1
C	1	0
D	1	1

Fig. 4. Three of the Fig.2 circuits used in a 70MHz four-channel multiplexer, gain of each being 4.

HEAVY DUTY "ALCAD" NICKEL- CADMIUM 6 VOLT BATTERIES 6 VOLT 54 A/Hrs. PLASTIC CASED IN WOODEN CRATES 16" X 9.5" HIGH X 5.5" WIDE EXCELLENT CONDITION, EX HOME OFFICE. UNDER 3 YEARS OLD. WEIGHT 15Kg/CRATE LIFE EXPECTANCY 20 YEARS 500 CRATES AVAILABLE £20/CRATE PLUS CARRIAGE 50A/Hr. NIFE (NICKEL-IRON) 6V BATTERIES ALSO AVAILABLE

COMPUTER ICS

2817A-20 (2K×8) EEPROM ex eqpt.	£2
AM7910 Modem chip ex. eqpt **£5** new	£10
80C88A-2 used	£1.25
27C64-25 used/wiped	**£1.50** 100+ £1
27S191 PROM	£2
IMS1400P-45	£2
80C31 MICRO	£2
P8749H MICRO	£5
D8751H USED	£6
NEW 4164-15	£1
USED 41256-15	£1
USED 4164-15	60p
BBC VIDEO ULA	£10
6845 CRT	£5
6522 PIA	£3
AY3-1015D UART	£2.50
9 × 41256-15 SIMM	£10
8 × 4164 SIP MODULE NEW	£8
HD 146818 CLOCK IC	£2
2864 EPROM	£3
27128A 250ns EPROM USED	£2 NEW £2.30
27C1001-20Z NEW 1M EPROM	£6
FLOPPY DISC CONTROLLER CHIPS 1771	£10
FLOPPY DISC CONTROLLER CHIPS 1772	£17.50
68000-8 PROCESSOR NEW	£6
HD6384-8	£5
ALL USED EPROMS ERASED AND BLANK CHECKED CAN BE PROGRAMMED IF DESIRED	
2716-45 USED	£2 100/£1
2732-45 USED	£2 100/£1
2764-30 USED	£2 100/£1.60
27C256-30 USED	£2
27C512 USED	£3.50
1702 EPROM EX EQPT	£5
2114 EX EQPT **50p** 4116 EX EQPT	70p
6264-15 8k STATIC RAM	£2
GR281 NON VOLATILE RAM EQUIV 6116	£5
Z80A SIO-O	£1.25
TMS27PC256-25 ONE SHOT 27C256	£1 ea 100/£70
P80387-16 CO-PROCESSOR	£80
M27C1024-12XF1 (40-pin 1 MEG EPROM)	£4.50
NMC9306EN EEPROM 256 bits	£1
7126 3½ DIGIT LCD DRIVER CHIP	£2 ea

REGULATORS

78H12ASC 12V 5A	£5
78M05 5V 0.5A	7/£1
LM317H T05 CAN	£1
LM317T PLASTIC TO220 variable	£1
LM317 METAL	£2.20
7812 METAL 12V 1A	£1
7805/12/15/24V plastic	25p 100+ 20p 1000+ 15p
7905/12/15/24 plastic	25p 100+ 20p 1000+ 15p
CA3085 TO99 variable reg	2/£1
LM338 5A VARIABLE 1.2-30V	£8
L387 5v ½A WITH RESET OUTPUT	£1ea £50/100

CRYSTAL OSCILLATORS

1M000 1M8432 1M000 4M000 10M000 16M000
18M432000 20M500 56M6092 .... **£1.50 each**

CRYSTALS

1M0 1M8432 2M000 2M304 2M77 3M000 3M2768 3M400
3M579545 3M58564 3M93216 4M000 4M194304
4M194304 4M4336 4M9152 5M000 5M0688 6M000
6M400 8M000 8M448 9M8304 10M240 10M245 11M000
12M000 13M000 13M270 14M000 14M31818 16M000
15M000 16M000 16M5888 17M000 20M000 21M300
21M855 22M1184 24M000 34M368 36M36875 36M5625
36M78125 36M79375 36M80625 36M81875 36M83125
36M84375 38M900 49M50 54M19166 57M7416 57M7583
69M545 69M550 .... **£1 each**

TRANSISTORS

BC107 BCY70 PREFORMED LEADS full spec	£1 £4/100 £30/1000
BC557, BC546B, BC238C, BC308B	£1/30 £3.50/100
2N3819 FETS short leads	4/£1

POWER TRANSISTORS

P POWER FET IRF9531 8A 60V	3/£1
N POWER FET IRF531 8A 60V	2/£1
2SC1520 sim BF259	3/£1 100/£22
TIP 141/2 **£1 ea** TIP 112/125/42B	2/£1
TIP35B/TIP35C	£1.50
SE9301 100V 1DA DARL SIM TIP121	2/£1
PLASTIC 3055 OR 2955 equiv **50p**	100/£35
2N3773 NPN 25A 160V **£1.60**	10/£14
2N3055H	4 for £2

TEXTOOL ZIF SOCKETS

28 WAY ZIF EX NEW EQUIPMENT	£2.50
40 WAY NEW	£5
SINGLE IN LINE 32 WAY CAN BE GANGED FOR USE WITH ANY DUAL IN LINE DEVICES . . . COUPLING SUPPLIED	2/£1.50

CAPACITORS COMPUTER GRADE

2200µF 160V SIC SAFCO FELSIC CO38	£4 (£1.20)
24,000µF 50V	£3 (£1.30)
10,000µF 100V SPRAGUE/PHILIPS	£6 (£2.00)

QUARTZ HALOGEN LAMPS

12V 50watt LAMP TYPE M312	£1 ea HOLDERS 60p ea
24V 150 WATTS LAMP TYPE A1/215	£2.50 each

NEW BITS

'SAFEBLOCKS' MADE BY RENDAR . . . MAINS 'RAT TRAP' USED	£4 ea
7126 3½-DIGIT LCD DRIVER CHIP	£2 ea
74N16 MOTOROLA CELLULAR CAR PHONE O/P MODULE	£5 ea
CMOS 555 TIMERS 20k available	2/£1 £30/100

MISCELLANEOUS

36 CORE 7/0.2mm OVERALL SCREENED	£50/100m
LITHIUM CELL 1/2 AA SIZE	2 FOR £1
PASSIVE INFRA RED SENSOR CHIP + MIRROR + CIRCUIT **£2 each**	
EUROCARD 21-SLOT BACK PLANE 96/96-WAY	£25 ea
"PROTONIC 24 VARIBUS" 16.7"×5" FIBREGLASS MULTILAYER PTH PCB	
EUROCARD 96-WAY EXTENDER BOARD 290×100mm	£10 ea
"PROTONIC 24" c/w 2 SUPPORT ARMS/EJECTORS.	
DIN 41612 96-WAY A/B/C SOCKET PCB RIGHT ANGLE	£1.30
DIN 41612 96-WAY A/B/C SOCKET WIRE WRAP PINS	£1.30
DIN 41612 64-WAY A/C SOCKET WIRE WRAP PINS	£1
DIN 41612 64-WAY A/C PLUG PCB RIGHT ANGLE	£1
DIN 41612 64-WAY A/B SOCKET WIRE WRAP (2-ROW BODY)	£1
BT PLUG+LEAD	3/£1
PC PARALLEL PRINTER CABLE	£5.90
13A MOULDED PLUG+2m lead	£1
MIN. TOGGLE SWITCH 1 POLE c/o PCB type	5/£1
LCD MODULE sim. LM018 but needs 150 to 250V AC for display 40×2 characters 182×35×13mm	£10
TL431 2.5 to 36V TO92 ADJ. SHUNT REG	2/£1
6-32 UNC 5/16 POZI PAN SCREWS	£1/100
NUTS	£1.25/100
PUSH SWITCH CHANGEOVER	2 £1
RS232 SERIAL CABLE D25 WAY MALE CONNECTORS	£5.90 ea (£1.30)
25 FEET LONG, 15 PINS WIRED BRAID + FOIL SCREENS	INMAC LIST PRICE £30
STICK ON CABINET FEET RS NO 543-327	30/£1
LEMAG EARTH LEAKAGE TRIP 35A 35mA TRIP	£9
FANS 240V 120MM	£6 (£1.50)
(OTHER VOLTAGES/SIZES USUALLY AVAILABLE)	
AMERICAN 2/3 PIN CHASSIS SOCKET	2/£1
HUMIDITY SWITCH ADJUSTABLE	£2
WIRE ENDED FUSES 0.25A	30/£1
NEW ULTRASONIC TRANSDUCERS 32kHz	£2/pr
12-CORE CABLE 7/0.2mm OVERALL SCREEN	70p/metre
POWERFUL SMALL CYLINDRICAL MAGNETS	3/£1
BNC 50OHM SCREENED CHASSIS SOCKET	2/£1
SMALL MICROWAVE DIODES AE1 OC1026A	2/£1
D.I.L. SWITCHES 10-WAY **£1** 8-WAY **80p** 4/5/6-WAY	80p
180VOLT 1WATT ZENERS also 12V & 75V	20/£1
VN 10LM 60V ½A 5 Ohm TO-92 mosfet	4/£1 100/£20
MIN GLASS NEONS	10/£1
RELAY 5V 2-pole changeover looks like RS 355-741 marked STC 47WBost	£1 ea
MINIATURE CO-AX FREE PLUG RS 456-071	2/£1
MINIATURE CO-AX FREE SKT RS 456-273	2/£1.50
DIL REED RELAY 2 POLE n/o CONTACTS	££
PCB WITH 2N2646 UNIJUNCTION WITH 12V 4-POLE RELAY	£1
400m 0.5W thick film resistors (yes four hundred megohms)	4/£1
STRAIN GAUGES 40 ohm Foil type polyester backed balco grid alloy	£1.50 ea 10+ £1
ELECTRET MICROPHONE INSERT	£0.90
Linear Hall effect IC Micro Switch no 613 SS4 sim RS 304-267	£2.50 100+ £1.50
HALL EFFECT IC UGS3040 + magnet	£1
OSCILLOSCOPE PROBE SWITCHED ×1 ×10	£12
1 pole 12-way rotary switch	4/£1
AUDIO ICS LM380 LM386 TDA 2003	£1 ea
555 TIMERS £1 741 OP AMP	6/£1
ZN414 AM RADIO CHIP	80p
COAX PLUGS nice ones	4/£1
COAX BACK TO BACK JOINERS	3/£1
4×4 MEMBRANE KEYBOARD	£1.50
INDUCTOR 20µH 1.5A	5/£1
1.25" PANEL FUSEHOLDERS	3/£1
CHROMED STEEL HINGES 14.5×1" OPEN	£1 each
12V 1.2W small w/e lamps fit most modern cars	10/£1
STEREO CASSETTE HEAD	£2
MONO CASS. HEAD **£1** ERASE HEAD	50p
THERMAL CUT OUTS 50 77 85 120°C	£1 ea
THERMAL FUSES 220°C/121°C 240V 15A	5/£1
TRANSISTOR MOUNTING PADS TO-5/TO-18	£3/1000
TO-3 TRANSISTOR COVERS	10/£1
PCB PINS FIT 0.1" VERO	200/£1
TO-220 micas + bushes	10/50p 100/£2
TO-3 micas + bushes	15/£1
PTFE min screened cable	10m £1
Large heat shrink sleeving pack	£2
IEC chassis plug filter 10A	£3
POTS SHORT SPINDLES 2K5 10K 25K 1M 2M5	4/£1
40k U/S TRANSDUCERS EX-EQPT NO DATA	£1/pr
LM335Z 10MV/degree C	£1
LM234Z CONST. CURRENT I.C	£1
PAPST 18-24V FAN 120MM WORKS OK ON 12V	£5
BNC TO 4MM BINDING POST SIM RS 455-961	£1
BUTTON CELLS SIM. AG10/AG12	4/£1
MIN PCB POWER RELAY 12V COIL 6V CONTACTS 2 P C/O	£1.25
AVEL-LINDBERG MOULDED TRANSFORMER TYPE OB10 15+15V 10VA QTY. AVAILABLE	£2 ea
BANDOLIERED COMPONENTS ASSORTED Rs, Cs, ZENERS	£5/1000
LCD MODULE 16 CHAR. X 1 LINE (SIMILAR TO HITACHI LM10)	£5
KYNAR WIRE WRAP WIRE	£1/REEL
OPI1264A 10kV OPTO ISOLATOR	£1.35 ea 100+ £1 ea
'LOVE STORY' CLOCKWORK MUSICAL BOX MECHANISM MADE BY SANKYO	£1 ea

DIODES AND RECTIFIERS

A115M 3A 600V FAST RECOVERY DIODE	4/£1
1N5407 3A 1000V	8/£1
1N4148	100/£1.50
1N4004 SD4 1A 300V	100/£3
1N5401 3A 100V	10/£1
BA158 1A 400V fast recovery	100/£3
BY127 1200V 1.2A	10/£1
BY254 800V 3A	8/£1
BY255 1300V 3A	6/£1
6A 100V SIMILAR MR751	4/£1
1A 600V BRIDGE RECTIFIER	4/£1
4A 100V BRIDGE	3/£1
6A 100V BRIDGE	2/£1
8A 200V BRIDGE	2/£1.35
10A 200V BRIDGE	£1.50
25A 200 V BRIDGE **£2**	10/£18
25A 400V BRIDGE **£2.50**	10/£22

SCRS

PULSE TRANSFORMERS 1:1+1	£1.25
2P4M EQUIV C106D	3/£1
TICV106D 800mA 400C SCR **3/£1**	100/£15
MEU21 PROG. UNIJUNCTION	3/£1

TRIACS .... DIACS 4/£1

NEC TRIAC ACO8F 8A 600V TO220	5/£2 100/£30
TXAL225 8A 500V 5mA GATE	2/£1 100/£35
BTA 08-400 ISO TAB 400V 5mA GATE	90p
TRAL2230D 30A 400V ISOLATED STUD	£5 ea
TRIAC 1A 800V TLC381T 16k AVAILABLE	5 FOR £1 £15/100

CONNECTORS

D25 IDC SOCKET FUJITSU	£2
34-way card edge IDCCONNECTOR (disk drive type)	£1.25
CENTRONICS 36 WAY IDC PLUG	£2.50
CENTRONICS 36 WAY IDC SKT	£4.00
BBC TO CENTRONICS PRINTER LEAD 1.5M	£3
CENTRONICS 36 WAY PLUG SOLDER TYPE	£4
USED CENTRONICS 36W PLUG+SKT	£3

PHOTO DEVICES

HI BRIGHTNESS LEDS CQX24 RED	5/£1
SLOTTED OPTO-SWITCH OPCOA OPB815	£1.30
2N5777	50p
TIL81 PHOTO TRANSISTOR	£1
TIL38 INFRA RED LED	5/£1
4N25, OP12252 OPTO ISOLATOR	50p
PHOTO DIODE 50P	6/£2
MEL12 (PHOTO DARLINGTON BASE n/c)	50p
LED's RED 3 or 5mm **12/£1**	100/£6
LED's GREEN OR YELLOW **10/£1**	100/£6
FLASHING RED OR GREEN LED 5mm **50p**	100/£40
HIGH SPEED MEDIUM AREA PHOTODIODE RS651-995	£10 ea

STC NTC BEAD THERMISTORS

G22 220R, G13 1K, G23 2K, G24 20K, G54 50K, G25 200K, RES 20°C DIRECTLY HEATED TYPE	£1 ea
FS22BW NTC BEAD INSIDE END OF 1" GLASS PROBE RES 20°C 200R	£1 ea
A13 DIRECTLY HEATED BEAD THERMISTOR 1k res. ideal for audio Wien Bridge Oscillator	£2 ea

CERMET MULTI TURN PRESETS ¾"

10R 20R 100R 200R 250R 500R 2K 2K2 2K5 5K 10K 47K
50K 100K 200K 500K 2M .... **50p ea**

IC SOCKETS

14/16/18/20/24/28/40-WAY DIL SKTS	£1 per TUBE
8-WAY DIL SKITS	£2 per TUBE
32-WAY TURNED PIN SKTS. 7k available	3 for £1
SIMM SOCKET FOR 2×30-way SIMMS	£1

SOLID STATE RELAYS

40A 250V AC SOLID STATE RELAYS	£10

POLYESTER/POLYCARB CAPS

100n, 220n 63V 5mm	20/£1 100/£3
1n/3n3/5n6/8n2/10n 1% 63V 10mm	100/£5
10n/15n/22n/33n/47n/66n 10mm rad	100/£3.50
100n 250V radial 10mm	100/£3
100n 600V Sprague axial **10/£1**	100/£6 (£1)
2µ2 160V rad 22mm, 2µ2 100V rad 15mm	100/£10
10n/33n/47n 250V AC x rated 15mm	10/£1
1µ 600V MIXED DIELECTRIC	50p ea
1µ0 100V rad 15mm, 1µ0 22mm rad	100/£6

RF BITS

CONHE X 50ohm PCB RIGHT ANGLE PLUG ITT/SEALECTRO 051 053 9029 22-0 4K AVAILABLE	2/£1
ALL TRIMMERS	3 for 50p
TRIMMERS larger type GREY **2-25pF**	YELLOW **5-65pF**
VIOLET	5-105pF
SMALL 5pF 2 pin mounting 5mm centres	
SMALL MULLARD 2 to 22pF	3 FOR 50p £10/100
TRANSISTORS 2N4427	70p
CERAMIC FILTERS 4M5/6M/9M/10M7	60p ea
FEED THRU' CERAMIC CAPS 1000pF	10/£1
SL610	£5
74N16 MOTOROLA CELLULAR CAR PHONE O/P MODULE	£5 ea
6 VOLT TELEDYNE RELAYS 2 POLE CHANGEOVER (BFY51 TRANSISTOR CAN SIZE)	£2
2N2222 METAL	5/£1
P2N2222A PLASTIC	10/£1
2N2369A	5/£1

PLESSEY ICS EX-STOCK

SL350G SL360G SL362C SL403D SL423A
SL521B SL523C SL541B SL630C SL850C SL1021A
SP8655 SP8719DG

MONOLITHIC CERAMIC CAPACITORS

10n 50V 2.5mm	100/£4.50
100n 50V 2.5mm or 5mm	100/£6
100n ax short leads	100/£3
100n ax long leads	100/£5
100n 50V dil package 0.3" rad	100/£8
1µF 50v 5mm	£6/100

KEYTRONICS

TEL. 0279-505543
FAX. 0279-757656
P O BOX 634
BISHOPS STORTFORD
HERTFORDSHIRE CM23 2RX

SEND £1 STAMPS FOR CURRENT IC+SEMI STOCK LIST – ALSO AVAILABLE ON 3½" FLOPPY DISK

MAIL ORDER ONLY

MIN. CASH ORDER £3.00. OFFICIAL ORDERS WELCOME
UNIVERSITIES/COLLEGES/SCHOOLS/GOVT. DEPARTMENTS
MIN. ACCOUNT ORDER £10.00
P&P AS SHOWN IN BRACKETS (HEAVY ITEMS) OTHERWISE 65p

ADD 17½% VAT TO TOTAL

ELECTRONIC COMPONENTS BOUGHT FOR CASH

CIRCLE NO. 150 ON REPLY CARD

Uses for varactors

Information on the construction, characteristics and uses of varactors are collected in a useful little note entitled *Zetex Variable Capacitance Diodes*, which explains their working and methods of specification. It also gives some circuits, not only for the usual FM and TV front ends, but for variable-frequency oscillators up to 1GHz and frequency multipliers that need no DC power.

VCOs, for example, are very simple, unless you want UHF oscillators, in which case a little thought in construction is needed. **Figure 1** is the circuit of a basic VCO using gates to give a 1-1.25MHz square-wave output at 1-1.25MHz, the circuit in **Fig. 2** being a transistor modified Clapp, oscillating at between 75MHz and 150MHz for a 30V swing of V_c. The 1GHz oscillator in **Fig. 3** will put out -5dBm, with a 10dB pad into 50Ω, and a second harmonic of –35dB. To make it work predictably, the transistor was in a slot in a small ground-plane board and the rest supported by leads kept as short as possible. The note says that such circuits will go to 2.5GHz, but does not provide a circuit; it does, however, mention a Zetex diode in such a circuit in the Plessey Satellite, Cable and TV Handbook.

Frequency multipliers contain nothing active and take no DC power; **Fig. 4(a)** shows the basic idea. There is input and output matching and a second-harmonic trap. **Figure 4(b)** is a more specific diagram, showing a 100-300MHz tripler, which has a band-pass filtered output and a fundamental trap. These arrangements are said to possess very high conversion efficiency and clearly use few components.

Figure 5 is the plot of capacitance against voltage for devices with abrupt junctions and **Fig. 6** that for hyperabrupt junctions.

***Zetex plc**, Fields New Road,*
Chadderton, Oldham OL9 8NP.
Telephone 061-627 4963.

Fig. 1. Voltage-controlled oscillator using logic gates to produce square waves at around 1MHz.

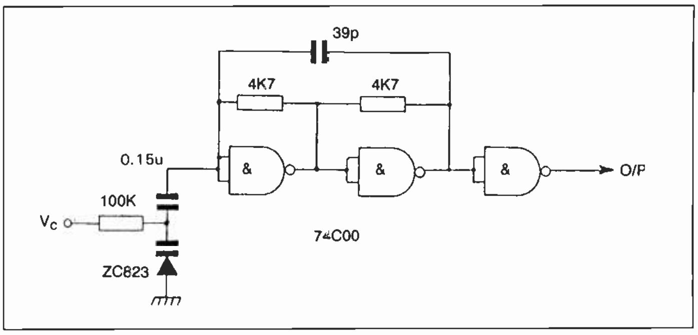

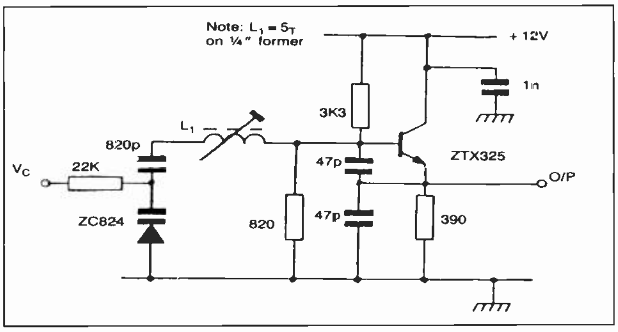

Fig. 2. Transistor VCO giving an output frequency range of 75MHz-150MHz for an input-voltage swing of 30V.

Fig.3. 1GHz VCO, which produces –5dBm into 50Ω.

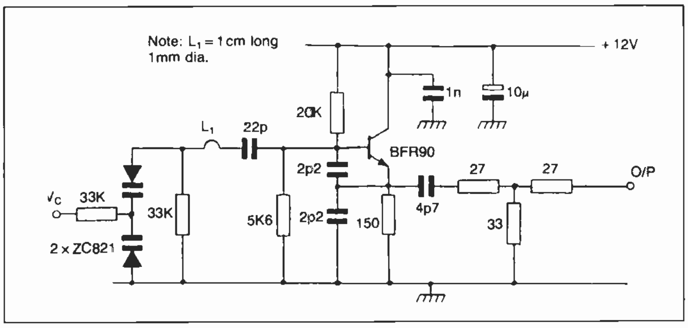

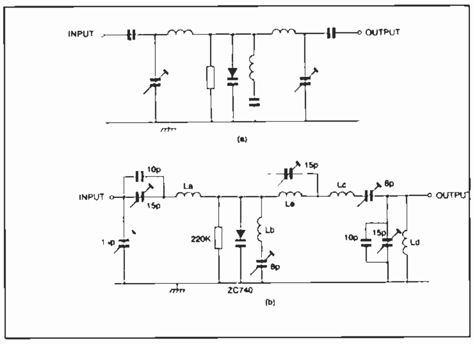

Fig. 4. General view (top) of a varactor multiplier, with matching and a second-harmonic trap, and a 100-300MHz tripler with a fundamental trap.

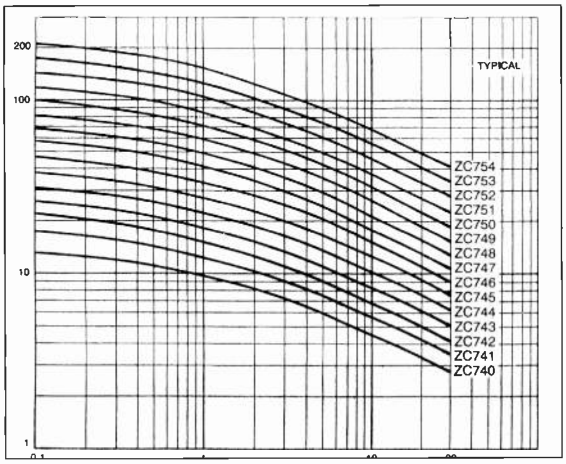

Fig. 5. Capacitance-against-voltage characteristics for varactors with abrupt junctions.

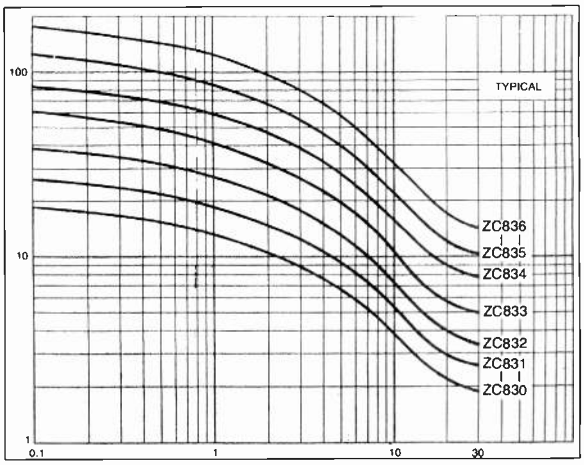

Fig. 6. C-V curves for hyperabrupt junction varactors.

1GHz receiver front end

Application AN117 from GEC Plessey describes the SL6442 in its role as amplifier/mixer working at 950MHz.

Figure 1 is a basic block diagram of the device, which contains a low-noise amplifier, gain controlled by a DC level, and two identical mixers for direct-conversion I and Q receivers or image-cancelling superhets. Battery economy is provided and the SL6442 works from 5V at around 4mA.

Figure 2 gives details of the illustrative circuit, which is optimised for maximum gain and low input-reflection coefficient at 950MHz, and gives a printed-board layout.

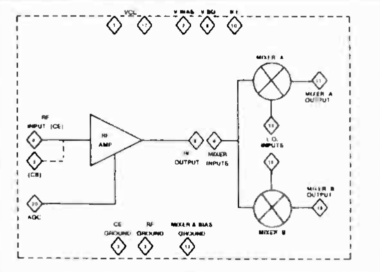

Fig. 1. SL6442 from GEC Plessey, a low-noise amplifier/mixer front end for use at 1GHz.

RF input is matched by means of a shorted stub in stripline form, matching of amplifier to mixer being by series inductor and mixer to 50Ω output by a variable LC network. Quadrature phase shift at the local oscillator input is accomplished by RC lead and lag networks, the inductor L_3 serving to resonate with the parasitic C between the two inputs and cancel it out. It is not easy to reconcile theory with practice in calculating the phase-shift component values in the presence of strays and these were found "empirically", according to the note — a very useful word, on occasion. At any rate, the values settled on give imbalances of around 1dB in amplitude and about 4° of phase.

Trimmers VC_1 and VC_2 give maximum output at an IF of 20MHz; other IFs will need a change in trimmer value or different inductors. Direct-conversion, zero-IF operation needs no change.

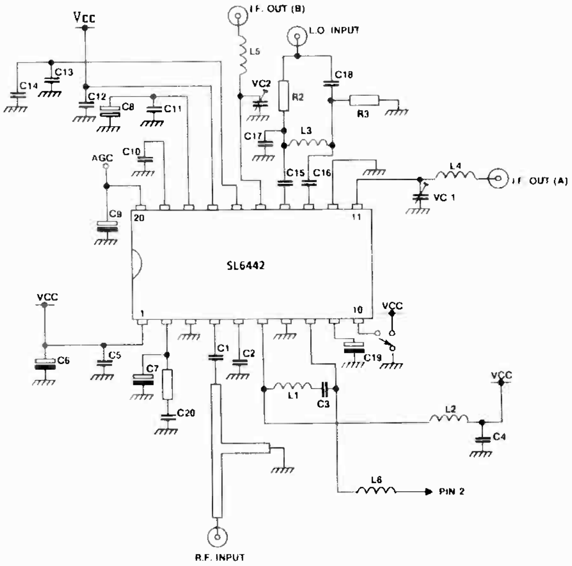

Fig. 2. Demonstration circuit of SL6442 used at 950MHz. Component values were initially found by Smith chart and s-parameter analysis and were refined by use of the Touchstone circuit simulator to achieve maximum gain and lowest input reflection at 950MHz.

Overall power gain is 7dB; voltage gain 33dB into 100kΩ; overall double-sideband noise is 8.2dB; local oscillator drive is -5dBm and terminations are 50Ω.

GEC Plessey Semiconductors, Cheney Manor, Swindon, Wiltshire SN2 2QW. Telephone 0793 518000.

MARCO TRADING

INCORPORATING EAST CORNWALL COMPONENTS

ELECTRONIC COMPONENTS & EQUIPMENT

MAIL ORDERS • WHOLESALE
RETAIL

SEND ORDERS TO – DEPT WW9
MARCO TRADING
THE MALTINGS, HIGH STREET, WEM
SHROPSHIRE SY4 5EN
Tel: (0939) 232763 Telex: 35565
Fax: (0939) 233800
ELECTRICAL & ELECTRONIC
COMPONENT SUPPLIERS

24HR ANSAPHONE

VISIT

OUR OTHER BRANCHES

SUPERTRONICS
Tel: 021 666 6504
65 HURST STREET
BIRMINGHAM B5 4TE

WALTONS
Tel: 0902 22039
55A WORCESTER ST
WOLVERHAMPTON WV2 4LL

Visit our shop in WEM
Tel 0939 232763

SEPTEMBER SPECIAL OFFER

(while stocks last)

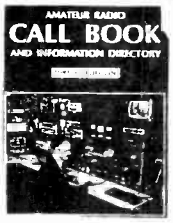

RSGB 1991/92 CALL BOOK

(less than half price)

SUPER SALE

The Official RSGB Call Book & Information Directory. This publication is a must for anybody interested in Amateur Radio. **430 PAGES!** Lists all UK & EIRE Call Signs and is packed with information including:

Abbreviations, Awards, Band Plans, Beacons, Clubs, Contests, EMC, Licensing Info., Locators, Morse Info., News, Packet Nodes, Propagation, QSLs, Planning permission, RAE, Raynet, Repeaters, RSGB Info., Safety, Satellites, Special Event Stations, Etc. etc.

CURRENT PRICE: £6.75!!
DIMS: 200 X 270MM
SALE PRICE £2.99

SALE SALE SALE SALE

LATEST 1992 CATALOGUE

- ★ Velleman Kit Catalogue
- ★ Free pre-paid envelope
- ★ Many new lines
- ★ Pages of special offers
- ★ Free gifts

132 PAGES £2.00
FREE with orders over £10

POST & PACKING IS NOW

£2.25

ALL PRICES INCLUDE 17½% VAT

NI-CAD RECHARGEABLE BATTERIES

	PRICE 1+	EACH 10+
AAA	£1.50	£1.30
AA	95p	85p
C	£1.95	£1.80
D	£2.00	£1.85
PP3	£3.90	£3.75

NI-CAD CHARGER

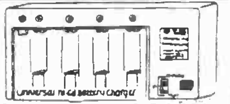

Charges AA, AAA, C, D & PP3 Ni-Cads 240V AC **£4.99**

SCART ADAPTOR

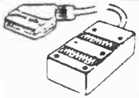

T113Z (2XSC) £10.50

Scart plug to two scart sockets for coupling three pieces of audio, video equipment with scart sockets.

SOLDER 18 & 22 SWG -500gm REEL

	1+	10+
★ 18swg	£4.95	£4.70 ★
22 swg	£4.99	£4.75

Remember: Our prices INCLUDE VAT!

CLOSED CIRCUIT TELEVISION SYSTEM

1 x CAMERA **£120**

USED

1 X CAMERA BRACKET **£7.75**

NEW

Complete price £185
Plus £15 carr

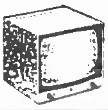

£70 USED 1 X MONITOR

FM TRANSMITTER

Made in U.K

Very high quality 'Mini-Bug – ideal for baby alarm, etc'! A very good range is obtainable – we have obtained over ½ mile, but it does depend on conditions. Simply remove cover – insert battery – and you'r ready to go. Reception can be obtained on any FM radio.
Frequency 105-109MHz FM

ORDER CODE SEC/FMB1

PRICE: £9.99

FM KIT

For those of you who enjoy building kits – we now offer the above transmitter in kit form. Ideal for the beginner – supplied complete with full, easy to follow instructions. Box NOT INCLUDED – See our BOXES Section for suitable housing
ORDER CODE SEC/FMKIT

PRICE: £7.50

HOME ALARM PACKAGE

Includes:

- ★ Optima Alarm Control Panel
- ★ External Red Bell Box
- ★ 2 x 1 Internal Passive I.R.
- ★ 2 x Door Contacts
- ★ Siren for bell box
- ★ 100 mtrs. cable and clips
- ★ Full fitting instructions

ONLY £130

★ **BACK-UP LEAD ACID BATTERY**
12V 1.9Ah
★ **£15.27**

LEAD ACID CHARGER
★ **£19.99**

★★ BELL BOXES ★★

A very attractive external box made of Polypropylene. Supplied complete with back plate. Available in Red, Yellow, Blue, White.

BASIC		FLASHING	
SEC/RED	£6.99	SEC/RS	£9.99
SEC/YELLOW	£6.99	SEC/YS	£9.99
SEC/BLUE	£6.99	SEC/BS	£9.99
SEC/WHITE	£6.99	SEC/WS	£9.99

MORSE KEY

£6.99

All metal, cast base, professional high speed key
Fine adjustment screws.
Dims (base) 75 x 50mm

COMPUTER DISKS

5¼ Computer Disks – 3M Type: 744 D-O SS DD

Single sided double density soft sector. Limited quantity, only a few hundred boxes. First come first served!

ORDER CODE: SO/636 **PRICE: £2.00 per box of 10**

B101 SWR METER SWR2T

Close tolerance SWR meter.
SWR .... 1:1 to 1:3
Frequency range .... 1.7 to 30MHz
Impedance 50Ω
Dims .... 70 x 47 x 65mm

Price £9.99

2-WAY HAND HELD CRYSTAL CONTROL TRANCEIVERS

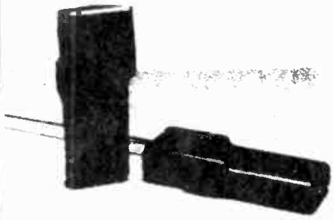

Built-in Telescopic Aerial, call button, transmitter receive key, on air indicator. Each unit requires PP3 Battery for operation (not supplied).

Operating Frequency .... 49 MHz
Transition Power .... 100 MHz
Frequency Tolerance .... + or – 0.005%
Range .... 1-2 Kilo. open field (depends on conditions)
Oscillation Crystal Control
Power .... 9V dc (PP3 Battery)

Pack B123 **£27.50** 1 pair in box

TUNGSTEN DRILL BITS

A range of metric, solid tungsten drill bits, suitable for drilling glass fibre based pcb's and general hobby use, giving extended life over HSS drills.
Drill bits range in size from 0.4mm to 3.0mm. Our packs of 10 are a random mix. Unsorted. Original price of these bits was £4.20 each!!. They really are the highest quality. **ORDER CODE: SO/610**

£3.50 per pack of 10 **Buy 10 packs for only £30**

DESOLDER TOOL

High quality, fitted with Teflon micro nozzle.
Length: 190mm
Dia: 20mm

PRICE: £2.99

SPARE NOZZLES 95p each

FULL RANGE OF BABANI BOOKS IN OUR CATALOGUE

HEATSHRINK PACK

10 lengths, assorted diameter of high quality heatshrink sleeving. Assorted colours. Approximate length: 12in.
ORDER CODE: SO/HEATSHRINK

1+ **£1.50** 10+ **£1.00**

QUARTZ-HALOGEN SPOTLIGHT

THIS UNIT SUBJECT TO DESIGN CHANGE

Hand held or hanging. Heat resistant polycarbonate housing, highly polished reflector. Protective lens cover doubles as base stand. With On/Off switch and 12ft curly cable terminating in cigar lighter plug. Produces 250,000 candle power – 5 times the intensity of average car headlamps **Price £5.75**

Power .... 12V d.c. 4.5A 55W
Dims .... 160 x 88 x 110mm

ANTEX IRONS

C-15W IRON	£9.30	XS-KIT 25W	£13.45
CS-17W IRON	£9.15	CS-KIT 17W	£13.30
XS-25W IRON	£9.50	C-KIT 15W	£13.15

All bits for irons £1.95, Elements £5.30 Stands £3.75

TWIN FLUORESCENT LAMP – 12V

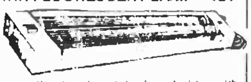

A very attractive twin tube lampholder with two 12V BW fluorescent tubes. White plastic case with clear plastic ribbed diffuser and ON/OFF switch. Supplied with 90cms of twin flex for connection to 12V battery (Red stripe to positive). Ideal for caravans, boats, vans, etc.
Overall dimensions 370 x 65 x 41mm
ORDER CODE Opto TFL12

	1+	10+	50+
Price	£6.50	£6.00	£5.25

SINGLE FLUORESCENT LAMP – 12V

Identical to above unit but single tube. 12V dc, 8 Watts. Dims 360 x 62 x 37mm
ORDER CODE Opto SL **£5.50**

PORTABLE FLUORESCENT LAMP – 12V

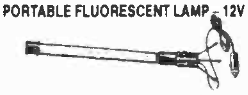

Free-standing or hanging with 15ft cable terminating in cigar lighter plug. For use in car, boat, van or home emergency. 12V dc
EVEN FLOATS IN WATER!
Overall dimensions: 430 x 30mm

ORDER CODE	1+	10+	50+
Price	£6.50	£6.00	£5.25

SPARE TUBES

Replacement tube for above Twin and Single flourescent lamps. Fits most 12V fluorescent lamps. Philips, etc. Tube length: approx 300mm (inc. pins).
ORDER CODE Opto Tube
£1.50 ea, 10 for £12

CIRCLE NO. 151 ON REPLY CARD

CLASSIFIED

TEL 081 652 8339 **FAX 081 652 8931**

ARTICLES FOR SALE

PHILLIPS PM3217 Dual trace 50MHz Delay sweep	£320
FARNELL DT12-5 12MHz Dual channel scope	£120
FARNELL DT12-14 12MHz Dual channel scope	£120
TEKTRONIX 2215 60MHz Dual channel scope	£375
TEKTRONIX 475 200MHz Dual channel scope	£425
TEKTRONIX 434 50MHz Dual channel scope	£250
TELEQUIPMENT D755 50MHz Dual channel scope	£180
TELEQUIPMENT D1010 10MHz Dual channel scope	£95
TELEQUIPMENT D1010R 10MHz Dual channel scope	£95
TELEQUIPMENT D1011R 10MHz Dual channel scope	£95
TELEQUIPMENT D1016A 20MHz Dual channel scope	£125
SCOPEX 4D10 10MHz Dual channel scope	£95
SCOPEX 4D10A 10MHz Dual channel scope	£95
SCOPEX 4D25 25MHz Dual channel scope	£125
DM64 10MHz Dual channel scope	£95
D67A 25MHz Dual channel scope	£130
REDIFON 1kW Linear amplifier 1.5MHz–30MHz c/w aerial filter unit – mains power unit and drive unit GK203N	£1250
MARCONI Universal Bridge TF2700	£120
MARCONI UHF Attenuator DC–1GHz TF2163S	£150
MARCONI 2GHz Digital frequency meter 2435	£495
GOULD Signal generator J3B	£120
KEMO 1.0Hz–100kHz Phasemeter Type DP1 (new)	£120
FLUKE 845AB High impedance voltmeter – null detector (new)	£500
SIEMENS Level meter 200Hz–620kHz Type D2155 c/w tracking osc. Type W3155	£1250
HP 3770B Telephone line analyzer	£950

All our equipment is sold with a 30-day guarantee.
SAE for enquiries. Phone for appointment or for demo. of any item.
P&P included UK only. VAT excluded.
For more details please contact:
TELFORD ELECTRONICS, Old Officers Mess, Hoo Farm, Humbers Lane, Horton, Telford, Shropshire TF6 6DJ. Phone: 0952 605451. Fax: 0952 677978.

Please ring if what you want is not on this list!

NORTHWEST COMMUNICATIONS
Specialists in Cellular Communications · Cellular Repair/Maintenance · Computer Sales/Repairs · Phone Systems · Facsimiles PX Welcome
Balceder House, Goulding Avenue, Leyland PR5 2HE
Telephone: (0772) 623 143 (5 lines) Fax: (0772) 621 488

IBM COMPATIBLE M/Cs

286	£395.50
386	£447.00
486	£579.00

All above systems come with VGA Mono, 20meg H/Drive, Keyboard etc.

OR FOR THE DIY ENTHUSIAST COMPLETE KITS SUPPLIED:

286	£371.00
386	£417.00
486	£540.00

MICE £16.95

MOTHERBOARDS

286-16	£49.40
386SX-25	£84.50
386SX-33	£97.50
386DX-33	£149.50
486SX-20	£156.00
486SX-25	£175.50
486DX-33	£403.00

I/O & VIDEO CARDS

Super I/O 2S/1P/1G/IDE	£14.95
I/O 2S/1 par/1 game	£9.95
IDE/FDD 2F/2HDD	£9.95
256 video card	£29.95
512 video card	£32.95
1M video card	£52.00
MFM card/2FD (inc. cables)	£32.00
KEYBOARDS	£22.00

Add £s for the following:

SVGA col	£130.00
Larger hard drives	£ Ring
Memory 1meg	£30.00

Brand new boxed AMSTRAD 2386DX 65meg hard drive, VGA monitor, Windows 3.1 £525

FLOPPY DRIVES

1.44 3½"	£29.90
1.2 5¼"	£39.00
360K 5¼"	£19.50

CASE & PSU

Slimline desktop	£53.50
Standard desktop (very high quality)	£54.60
Mini tower (modern design)	£71.50
Full tower	£84.50

HARD DRIVES

MFM 20meg	£49.00
IDE 40meg	£130.00
IDE 70meg	£162.50
IDE 100meg	£208.00
IDE 200meg	£383.50

10 off OLIVETTI 9-PIN PRINTERS Special Price £115.00

MONITORS

Super VGA colour 0.39mm	£180.70
Super VGA colour 0.28mm	£208.10
VGA mono	£58.50
Herc. mono (12volt)	£39.00

DR DOS 6.00 THIS MONTH'S GIVEAWAY Price £31.95

MS DOS	£42.00

BARGAIN BASEMENT Used Units

Amstrad 1512 mono 20meg hard drive	£345
Amstrad 1640 col. 30meg hard drive	£395
IBM PS2 Model 30 20meg hard drive, colour VGA	£365

Access

All prices subject to VAT and + postage/packing. All systems carry a 1-year warranty.
We are major suppliers of computer equipment. Please phone or fax with your enquiries.
Access/Visa please add 2.5%

VISA

Access VISA

Cooke International

TEST INSTRUMENTS

SUPPLIERS OF BACK-UP AND SUPPORT EQUIPMENT FOR 1980's TECHNOLOGY

Also stock a varied range of good used modern equipment and workshop manuals.

Send for lists.

Cooke International, Units 4/5, Fordingbridge Site,
Main Road, Barnham, Bognor Regis, West Sussex PO22 0EB
Tel. 0243 545111 Fax: 0243 542457

Wide range of items available. Send SAE for lists.

TELNET

LARGE STOCK OF PRE-OWNED TEST EQUIPMENT FOR DISPOSAL

CALIBRATED TO RECOMMENDED STANDARD (not ex-government)

1. **OSCILLOSCOPES** – such as Hewlett Packard, Gould, Philips, Tektronix, Telequipment	(From £100)
2. **FREQUENCY COUNTERS** – Racal	(From £50)
3. **LOGIC ANALYSERS** – Hewlett Packard	POA
4. **LEVEL METERS/LEVEL OSCILLATORS** Wandel + Golterman 200Hz 6MHz and 6kHz–18.6MHz	POA
5. **AVOs + D.M.M.s**	From £15
6. **POWER SUPPLIES** Farnell, Solartron	From £30
7. **COMPONENT COMPARATORS** – AVO	POA
8. **MAINS FILTERS** (Isolating Transformers)	POA
9. **PULSE GENERATORS** – Lyons	POA
10. **SWEPT AMPLITUDE ANALYSERS** – (H. Packard)	POA

PLUS MANY MORE ITEMS NOT LISTED HERE

ALL GUARANTEED FOR 3 MONTHS

FAX LIST AVAILABLE AND LOW-COST DELIVERY NATIONALLY CAN BE ARRANGED IF REQUIRED

TELNET
UNIT 8, CAVANS WAY,
BINLEY INDUSTRIAL ESTATE,
COVENTRY CV3 2SF

(Premises situated close to Eastern Bypass in Coventry with easy access to M1, M6, M40, M69)

Telephone: 0203-650702 Fax: 0203-650773

CLASSIFIED ADVERTISEMENT ORDER FORM

1	2	3	4	5	6
7	8	9	10	11	12
13	14	15	16	17	18
19	20	21	22	23	24
25	26	27	28	29	30

Place a lineage advertisement in next months issue and it will cost, for a single insertion, only £2.50 per word

Lineage advertisements under £50 have to be pre-paid by credit card or cheque.

Special rates:

6 insertion £2.15 per word/issue. (Advertisement can appear every month or every other month only) 12 insertions £1.80 per word/issue. (Advertisement to run every month only).

WHY NOT PLACE A BOXED ADVERTISEMENT TO GIVE MAXIMUM IMPACT? →

Extras:

Spot Colour 20%

Box number service.................................£22.00

EXAMPLE SIZE

3 cm x 1 column

For 1 insertion cost is: £60.00

For 6 insertions costs are: £51.00 per issue

For 12 insertions costs are: £42.00 per issue

ALL RATES QUOTED ARE EXCLUSIVE OF VAT: All major credit cards accepted

Please debit my__________________card a total of £__________________

☐☐☐☐☐☐☐☐☐☐☐☐☐☐☐☐

Expiry Date:__________________

Please ensure that address given is where your credit card statement goes to.

NAME..

ADDRESS...

....

TEL NO.. SIGNATURE ....

All advertisements must be received 5 weeks prior to publication date.

All cancellations must be received by 8 weeks prior to publication date after that. No advertisement can be cancelled.

Please send to Electronics World & Wireless World, Classified, Room L329, Quadrant House, The Quadrant, Sutton, Surrey SM2 5AS. Tel: Pat Bunce on 081-652 8339.

ARTICLES FOR SALE

SPECIAL OFFER

SATELLITE RECEIVER New Ferguson BSB (Chassis only) with Tuner and Modulator etc. **£10**
35cm DISH With LNB 11.7 to 12.7GHz **£15**
HAND SET Remote Control for above Receiver **£1.50**
SINCLAIR POWER SUPPLY For Spectrum+2. 9Volt 2.1Amp **£3**

All prices exclude VAT and Carriage
ALSO LARGE QUANTITIES OF ELECTRONIC COMPONENTS
FOR DISPOSAL

TELEPHONE 081 445 0749/445 2713

R. HENSON LTD.
21 Lodge Lane, North Finchley, London N12 8JG
(5 minutes from Tally Ho Corner)

TURN YOUR SURPLUS TRANSISTORS, ICS ETC, INTO CASH
Immediate settlement.
We also welcome the opportunity to quote for complete factory clearance.
Contact:
COLES-HARDING & CO.
103 South Brink
Wisbech, Cambs PE14 0RJ.
ESTABLISHED OVER 15 YEARS
Buyers of Surplus Inventory
Tel: 0945 584188 Fax 0945 475216

GOLLEDGE
ELECTRONICS
CRYSTALS OSCILLATORS FILTERS

Comprehensive stocks of standard items Over 650 stock lines. Specials made to order.
OEM support: design advice, prototype quantities, production schedules
Personal and export orders welcome.
SAE for our latest product information sheets.

GOLLEDGE ELECTRONICS LTD **Tel: 0460 73718**
Merriott, Somerset, TA16 5NS **Fax: 0460 76340**

ARTICLES WANTED

WANTED: VALVES, TRANSISTORS. I.Cs (especially types KT66, KT88, PX4. PX25). Also capacitors, antique radios. shop clearance considered. If possible, send written list for offer by return. Billington Valves, phone 0403 865105. Fax: 0403 865106. See adjoining advert.

WANTED
Test equipment, receivers, valves, transmitters, components. cable and electronic scrap and quantity.
Prompt service and cash.
M & B RADIO
86 Bishopgate Street,
Leeds LS1 4BB
Tel: 0532 435649
Fax: 0532 426881 9956

WANTED: VALVES
Receiving & Industrial, All Kinds,
All Quantities.
KURLUFF ENTERPRISES
43331 Maxson Road, El Monte,
CA 91732. USA
TEL: (818) 444 7079
FAX: (818) 444 6863
Charlie Dripps

STEWART OF READING
110 WYKEHAM ROAD,
READING, RG6 1PL
TEL: 0734 68041
FAX: 0734 351696

TOP PRICES PAID FOR ALL TYPES OF SURPLUS TEST EQUIPMENT, COMPUTER EQUIPMENT, COMPONENTS etc. ANY QUANTITY. 103

WANTED
Receivers, Transmitters, Test Equipment, Components, Cable and Electronic, Scrap. Boxes, PCB's, Plugs and Sockets, Computers, Edge Connectors.
TOP PRICES PAID FOR ALL TYPES OF ELECTRONICS EQUIPMENT
A.R. Sinclair, Electronics, Stockholders,
2 Normans Lane, Rabley Heath, Welwyn,
Herts AL6 9TQ. Telephone: 0438 812 193.
Mobile: 0860 214302. Fax: 0438 812 387 780

Tel:
081-652-8339
Fax:
081-652-8931

SERVICES

SERVICES OFFERED
of an
ENGINEER
for installation, commissioning and maintenance.
UK/overseas.
Daily Rates.
MOBILE: 0831 869788
TEL/FAX: 0333 424797

WANTED:
ELECTRONICS
GENIUS

To help me repair integrators and spectrographs etc. From 1950s–70s. Valves and Printed Circuits, Swiss-made. Approx. 1 Day/Month in Bradford.
Contact: EQUIPTEX on
0535 602332 fax/phone.
286 Bradford Road, Riddlesden,
Keighley, West Yorkshire BD20 5JU.

FREE PRIVATE CLASSIFIED

SONY PCM 701 Processor. Record audio digitally to industry standard on any VCR. £340 (with JVC VCR £390). 0782 782419 Staffs.

WIRELESS WORLD Bound annual volumes March 1947 to December 1981. Mint condition. £5.00 each or £150.00 set. 081-642-7086.

LOW COST RANGER1 PCB DESIGN FROM SEETRAX

- **Circuit Schematic**
- **Circuit Capture**
- **PCB Design**
- **Host Of Outputs**

REDUCED PRICE!

All-In-One Design System

£100

Fully Integrated Auto Router

£50

Ask Us About Trade-In Deals

Call Now For Demo Disk on 0705 591037

Seetrax CAE • Hinton Daubnay House
Broadway Lane • Lovedean • Hants • PO8 0SG
Tel: 0705 591037 • Fax: 0705 599036

What The Press Said About RANGER1

For most small users, Seetrax Ranger1 provides a sophisticated system at an affordable price. It is better than EasyPC or Tsien's Boardmaker since it provides a lot more automation and takes the design all the way from schematic to PCB - other packages separate designs for both, that is, no schematic capture. It is more expensive but the ability to draw in the circuit diagram and quickly turn it into a board design easily makes up for this.

Source JUNE 1991
Practical Electronics

Pay by Visa or Access

CIRCLE NO. 152 ON REPLY CARD

matmos

TATUNG TCS8000 386 COMPUTER SYSTEM last few at £249

386DX with 102 keyboard manuals, 210 watt PSU, I/O card, hard and floppy controller (please state MFM, ESDI, IDE or SCSI), 1 2 or 1.4 Mbyte floppy drive, 1 Mbyte RAM upgradable to 16 Mbyte, eight slots, MS-DOS, 16 MHz clock £249, with 2 Mbytes RAM £269 Fitted with 62 Meg hard drive add **£100**. Stocks limited – please hurry

MATMOS 25 MHz 386 SYSTEMS

Latest style high quality 386 DX computer with AMI Bios, 2 serial, 1 parallel ports, 1 Mbyte RAM, eight slots, Hard and Floppy controller (state SCSI, ESDI, MFM or IDE), 1 2 or 1.44 Mbyte floppy drive and small footprint luxury desktop case £319

TOP SPEC. 486 SYSTEMS

20 MHz 486 SX system, 64K 1 Mbyte RAM, 1.44 Mbyte floppy drive, I/O card etc £449
33 MHz DX 486 cache system, with 1 Mbyte RAM £599, 50 MHz DX 486 cache system £849
Phone for details and a quote for complete system to your requirements.
Carriage on systems £15 See below for add-ons and other stock items

486 CAD/DTP SYSTEM WITH 1280 × 1024 MONITOR

486 33 MHz cache system with 91 Mbyte Seagate hard drive, 3.5-inch 1.44 floppy, 4 megs RAM (upgradable to 32 Megs), tower case, 102 keyboard, 2 serial, 1 parallel ports, OPTI chipset, AMI bios, Microfield Graphics T8 colour graphics controller with 2 Mbytes video RAM and 8 MIPS processor, Hitachi 15-inch ultra high resolution monitor to display 1280 × 1024 non-interlaced Will drive Windows 3/3 1, ACAD etc Cancelled defence order limited stocks £1399 Ask for colour leaflet! or quote for machine to your spec

LASER PRINTERS

Konica LP3110 10 10 page per minute high quality laser printer Fully Laserjet II compatible With free on site mainenance £695 (carr £15) stocks limited

FLOPPY DISK DRIVES

360K 5.25-inch IBM standard half-height drive £29.95 (carr £3.50)
720K 3.5-inch Citizen OSD third-height drive for XT or AT (NOT Amstrad 1512/1640) £24 50 (carr £3)
1.44 Mbyte 3.5-inch Citizen OSDA39C third-height drive for ATs, grey bezel £39.95 (carr £3)
1.2 Mbyte 5.25-inch Panasonic half height £39 95 (carr £4).
Kit to fit 3.5 inch drive in 5.25 inch space suitable all Citizen drives inc. cable adaptors £4.99 (carr. free with drives)

IBM standard floppy disk drive cable £3

HARD DISK DRIVES

MFM: 10 Mbyte NEC 5124 5.25-inch £25, **62 Mbyte** Micropolis 1324A 5.25 full height £100
RLL: 30 Mbyte NEC 5127 5 25-inch £89
SCSI: 20 Mbyte Miniscribe 8225S 3.5-inch £69.95, **91 Mbyte** Seagate/Imprimus ST2106N 5.25-inch £189, **330 Mbyte** Seagate ST4376N 5.25-inch full height £399
ESDI: all with 16-bit high speed controllers – **94 Mbyte** Seagate/Imprimus ST2106N 5.25-inch £209, **115 Mbyte** NEC D3661 3 5-inch £239 **141 Mbyte** Micropolis 1355 5.25-inch full height £229, **160 Mbyte** Micropolis 5.25-inch half-height £279. Access time on ESDI drives 17 msec. or better (carr on hard drives £5). HDD cable set £5

DISK DRIVE CONTROLLER CARDS (carr £2.50)

XT MFM £24.95, XT RLL £37 50, XT SCSI £29.50, AT MFM £19.95, AT IDE £12.95, AT SCSI £37 50, AT ESDI (Cache) £49
Multi SCSI card for hard drive, CD, WORM, tape etc Future Domain firmware, £49.
High transfer rate intelligent SCSI card; supports all devices under MSDOS, Unix, OS/2 and Netware, £139. As above with SCSI and IDE interfaces on one card £149 New Ultra-fast (33 msec) SCSI cache cards expected soon Also EISA cache controllers

IBM COMPATIBLE AT MOTHERBOARDS, CARDS etc

66 MHz 486 DX2 baby size motherboard with 256K cache Co-processor built in Fan cooled CPU £649 Landmark 220 MHz
33 MHz 486 DX baby size motherboard with extra 64K cache. Floating point co-processor built into CPU Eight expansion slots, OPTI WB chipset £449 (carr £5) 50 MHz DX or DX2 P.O.A.
20 MHz 486 SX motherboard; The 486 SX is the same as the DX but without the Maths Co-Processor £199 (carr £3 50)
40 MHz 486 SX motherboard as above but twice the speed! Fan cooled CPU £249.
20 MHz 386 motherboard, accepts up to 8 Mbytes SIMMS RAM, £89, 25 MHz 386 DX £109 (carr £3 50)
1 Mbyte SIMM RAM for 386/486 (70ns) £24
EISA 486 top spec EISA systems now in stock, please ring for quote on a system 75 MHz 486 expected soon — please ring
AT MULTI I/O card with 1 parallel, 2 serial, 1 game, 2 floppy, IDE hard drive £19.95
AT I/O card, parallel, 2 serial, game £14 95
Mono graphics card £12 95 (all carr £2)
Mouse Microsoft compatible, serial with all software £14.95 (carr £4)
Keyboard 102-key UK, top quality click action, £29 95 (carr £4)

NETWORK PRODUCTS

Ethernet card Novell NE-2000 compatible 16-bit £89 (carr £2). Novell Lite network software £65. All network cables and connectors in stock

AT/XT CASES WITH PSU

Desktop with 3 × 5 25-inch and 1 × 3.5-inch bays, latest styling, £34.95 With 200W psu £59 (carr £6.50)
Luxury desktop as above, with psu, but to accept full size motherboard, small footprint, £89 **Mini tower** £69 (carr £6 50)
Full size tower with 6 × 5.25-inch bays, 230W psu, digital speed display, suits all motherboards inc. 486, £109 (carr £10).

INTEL 386 PROCESSOR AND 387 CO-PROCESSOR

(386 and 387 processors extracted from new systems and guaranteed 1 year)

20 MHz 386-20 DX cpu £49 (carr £1)
20 MHz 387-25 co-processor £59 (carr £1).

MONITORS

MONO HERCULES 14-inch paper white screen, high res. display, £49 (carr £6 50)
MONO VGA 12-inch paper white high resolution £59 (carr £6.50).
MONO SVGA PORTRAIT A4 15-inch Screen 800 by 1000, full VGA and Windows 3/3 1 compatibility Complete with 512K card and drivers £125 (carr £6 50).
COLOUR SUPER VGA 14-inch up to 1024 by 768 multisync, 0.28 dot pitch Very high quality display £219 (interlaced), £249 (non-interlaced) (carr £10)

CAD COLOUR

20-inch fixed frequency 48kHz Hitachi CM2086 monitors, £299.
15-inch fixed frequency 64kHz Hitachi HM4115 with **Microfield Graphics T8 driver card** for Autocad and Windows 3/3 1 at 1280 by 1024 non interlaced (new) £399 (p o a for carriage for above)

VGA CARDS AND WINDOWS ACCELERATORS

16-bit VGA card, 256K, all emulations, up to 800 × 600, with software to run all major packages. Oak chip set Switchable for use in XT's £29 95.
16-bit 1024 × 768 super VGA card Very high resolution with 512K and drivers for Windows, Acad, VP etc. Full manuals and disks Latest version of the industry standard Trident chip set. £49; 1 Mbyte version £59 (carr on cards £2.00).
50 MHz S3 Windows Accelerator Latest high speed accelerator card using the full 50 MHz S3 chipset (carr £2).
NCR Windows Accelerator with 2 MByte video RAM £149 (carr £2).
VGA to TV PAL card Connects between VGA card and TV or video at up to 640 by 480 256 colours. Composite video (PAL) output. VGA monitor can still be used. £39 (carr £2)

DIGITISERS

Hitachi Puma Series Digitisers erd of stock' 24 by 36 inches and 36 by 48 inches only, new, no pucks, no psu's. £150 to clear (carr on application)

MODEM CARDS

Hayes Compatible 2400BPS internal modem fully compatible with MNP 5 error correction. Auto dial/answer and speed sensing. Works with Windows 3, Procom, Crosstalk etc £69 (car £4)

POWER SUPPLY

Astec BM140 IBM XT/AT compatible 150W, +5V at 15A, +12V at 5A, −5V at 0.3A, −12V at 0.5A, fan cooled, rear panel switch, good value at £19.50 (carr £4)

SOFTWARE AND DISKS

DR DOS 6 Latest operating system from Digital Research with many extra features including file compression and good memory handling £39 95 **MS DOS 5** £49 95 (carr £4)
WINDOWS 3.1 Latest version from Microsoft on 3.5-inch disks £69.95 (carr £4)
3.5-INCH DISKS Box of ten 1.44 Mbyte preformatted £9.95 (carr £2).

Stop Press! 386-16 motherboards not working but with guaranteed good 386DX cpu £29 (carr £4) *Few only, no guarantee on motherboard.*

NB ★ VAT and carriage must be added to all items (quotes for carriage overseas).
★ Everything new, and guaranteed one year unless stated; ex-dem. products guaranteed 6 months.
★ Access and Visa telephone service.

MATMOS LTD., UNIT 11, THE ENTERPRISE PARK,
LEWES ROAD, LINDFIELD, WEST SUSSEX
RH16 2LX. 0444 482091 and 0444 483830
(Fax: 0444 484258).

Matmos Ltd. has been trading successfully since 1976

CIRCLE NO. 153 ON REPLY CARD

INDEX TO ADVERTISERS

	PAGE
Anchor Surplus	777
Antex Electronics Ltd	717
AOR (UK) Ltd	749
Bull Electrical	783
Buyers News	750
Citadel Products Ltd	IBC
Dataman Designs	IFC,713
Display Electronics Ltd	766
Feedback Test & Measurement	771
G H Systems Ltd	773
Halcyon Electronics	750
Hitex (UK) Limited	773
Hoka Electronics (UK)	757
ICOM (UK) Limited	743
Integrated Measurement Systems Ltd	782
IPK Broadcast Systems	736
J & M Computers	761
J A V Electronics	743
Johns Radio	733
Kestral Electronic Components Ltd	743
Keytronics	786
Langrex Supplies Ltd	717
M & B Electrical	762
M & B Radio (Leeds)	749
M Q P Electronics	759
Maplin Electronics	OBC
Marco Trading	789
Matmos Ltd	792
Micro Amps Ltd	724
National Instruments	715
Number One Systems Ltd	711
Pentagon Electronic Design	736
Pico Technology	740
Ralfe Electronics	738
Research Communications Ltd	710
Seetrax Ltd	791
Sherwood Data Systems Ltd	749
Smart Communications	736
Stewart of Reading	740
Strumech Engineering Ltd	773
Surrey Electronics Ltd	750
TELEVISION	759
Those Engineers Ltd	759
Thurlby Thandar Ltd	740
Trio-Kenwood UK Ltd	717
Tsien Ltd	738
Ultimate Technology	706

OVERSEAS ADVERTISEMENT AGENTS

France and Belgium: Pierre Mussard, 18–20 Place de la Madeleine, Paris 75008.

United States of America: Jay Fenman, Reed Business Ltd., 205 East 42nd Street, New York, NY 10017 – Telephone (212) 867 2080 – Telex 23827.

Printed in Great Britain by Riverside Press, Gillingham, Kent, and typeset by Marlin Graphics, Sidcup, Kent DA14 5DT, for the proprietors, Reed Business Publishing Ltd, Quadrant House, The Quadrant, Sutton, Surrey SM2 5AS.

© Reed Publishing Ltd 1992.

Electronics and Wireless World can be obtained from the following: AUSTRALIA and NEW ZEALAND: Gordon & Gotch Ltd, INDIA: A.H. Wheeler & Co, CANADA: The Wm Dawson Subscription Service Ltd.; Gordon & Gotch Ltd., SOUTH AFRICA: Central News Agency Ltd.; William Dawson & Sons (S.A.) Ltd.; UNITED STATES: Worldwide Media Services Inc., 115 East 23rd Street, NEW YORK, N.Y. 10010. USA. *Electronics & Wireless World* $5.95 (74513).

TOTAL PROGRAMMING SOLUTIONS FROM CITADEL

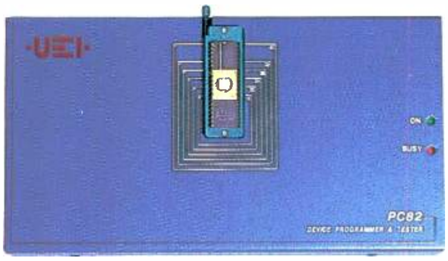

PC82 UNIVERSAL PROGRAMMER £449.00

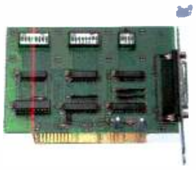

- Universal programmer – the complete designers kit.
- Over 1,500 devices – call for list on FREE disk.
- EPROM, EEPROM, Flash, BPROM, GAL, PAL, MPU etc.
- Serial EEPROM, EPLD, MACH, MAX, MAPL, CMOS EPAL.
- Device testing – 74XX, 40XX, 45XX, DRAM, SRAM.
- PAL vector test.
- Clear menu driven software
- Text mode only, suits any video card.
- 40 pin Zero insertion force socket.
- Device testing – 74XX, 40XX, 45XX, DRAM, SRAM.
- Small half card to install in PC may be left in place.
- Secure round cable and locking D connectors.
- Proven reliability – over 100,000 units sold.
- Programmer pod size – 260×140×38mm.

ADAPTERS FOR THE PC82 From £85.00

- Extend programming facility for special devices.
- Allows alternative socket types eg PLCC.
- Multi-gang adapters for fast programming of EPROMS, GAL, PAL and popular CPU types.

FEATURES ALL PROGRAMMERS

For the IBM PC, install the interface card and programming socket, load the menu-driven software and you have a complete design system at your fingertips. The programmers will run on any compatible IBM machines such as XT, AT, '286, '386 or '486. Whether it be an Amstrad or Compaq the system will work. All features are software-driven and supplied on 5¼" disks, these may be copied onto your hard disk using the DOS copy command. All control of the programmer, programme voltages etc are menu-driven by selecting manufacture, type number, and selection of a suitable speed algorithm. Blank check, read & modify, verify, programme, auto programme, security blow etc.
FREE SOFTWARE UPDATES as new devices become available.

FILE CONVERSION FACILITIES

- HEX to BIN File conversions for Intel, Motorola and Tektronics.
- 2 way/4 way Bin file splitter for 16/32 bit data.
- Dumpfile to Console, modify and re-programme.

For further information and your **FREE PC82** Simulation and device disk

PHONE SAMANTHA NOW ON:
081 951 1848
081 951 1849

FREE DEMO DISK

M25 BULK FAST ERASER £199·00

- Same advanced UV source as the M1 but 4 lamps.
- Very large capacity 64×32 pin chips or one double Eurocard.
- All other features as M1.
- Low profile steel case finished in powder coat.
- Size 365×240×65mm high.

M1 FAST ERASER £99·00

- Advanced UV source.
- Typical erase time three minutes.
- LED display of set time and countdown.
- End of time indicated by beep and display.
- Large capacity 13×28 pin devices.
- Sturdy construction, plated steel & aluminium
- Small footprint only 65×225×100mm high.

PC86 HANDY POCKET DEVICE TESTER £99·00

- Tests and identifies virtually all TTL & CMOS.
- Test many DRAM and SRAM memory chips.
- LCD display of type number and results.
- Battery operated (PP3) and completely self-contained.
- Zero insertion force test socket.
- Dimensions 90×140×30mm.

PC84-1 to -8 ROM PROGRAMMERS From £139·00

- Low cost EPROM programmer – devices up to 1Mb CMOS and NMOS.
- One to eight gang versions.
- To program 2716 to 271000.
- 32 pin Zero insertion force sockets.

ORDER INFORMATION

Please include £7 for carriage by overnight courier (£20 for exports) and VAT on all UK orders. ACCESS, VISA or CWO. Official orders welcome from Government bodies and local authorities.

BARCLAYCARD VISA CP Citadel

CITADEL PRODUCTS LTD
DEPT WW
50 HIGH STREET, EDGWARE
MIDDLESEX HA8 7EP