ELECTRONICS WORLD

VOLUME 113, ISSUE 1860

9 770959 833110 12

DECEMBER 2007 £4.60

www.electronicsworld.co.uk

THE ESSENTIAL ELECTRONIC ENGINEERING MAGAZINE

CAN VISTA MAKE YOU SAFE ONLINE?

THE FUTURE OF STEALTH DESIGN

CREATING MULTICHANNEL RADIO

PERFECT FM RECEPTION FROM BUILT-IN ANTENNAE

ENJOY 2 FREE ISSUES AND OUR 2005 ARTICLES CD

PASSIVE & ACTIVE COMPONENTS

CASE STUDIES FOR DESIGNERS

subscribe today and save 16%

CALL +44 (0)1795 414608 OR VISIT WWW.ELECTRONICSWORLD.CO.UK

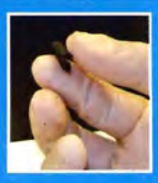

TECHNOLOGY
PAPER BATTERY AIMS TO POWER A CAR SOME DAY

BOOK REVIEW
ELECTRONIC CIRCUITS FUNDAMENTALS AND APPLICATIONS

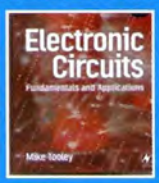

PRODUCTS
LED DRIVERS, CLASS-D AUDIO AMPS, ZIGBEE ANTENNAS

ALSO IN THIS ISSUE: INSIGHT @ UKDL @ TIPS 'N' TRICKS

SERIAL COMMUNICATIONS SPECIALISTS
Test and Measurement Solutions

EasySYNC™

featured products

£81.50 £61.00

CAN-USB & CAN-232
affordable CAN Bus to USB and RS232 interface solutions

=== Bronze Prize Winner ===
NASA Tech Briefs 2004
Products of the Year

£125.00

DS1M12 USB Scope / Logger
2 x 1MS/s Input Channels + waveform generator output. EasyScope & EasyLogger s/w included.

£36.00

USB-2COM-M
2 Port Industrial USB RS232 Serial with wall mount bracket and DC auxiliary output

£65.00 £10.00

UPCI-400HS
4 Port UPCI RS232 Serial Card with Spider Cable or COMBOX IO (extra)

Affordable CAN Bus Solutions
CANUSB is a very small dongle that plugs into any PC USB Port and gives an instant CAN connectivity. This means it can be treated by software as a standard COM Port (serial RS232 port) which eliminates the need for any extra drivers or by installing a direct driver DLL for faster communications and higher CAN bus loads. CAN232 is a very small dongle that plugs into any PC COM Port, or any other RS232 port in an embedded system and gives an instant CAN connectivity. This means it can be treated by software as a standard COM Port (serial RS232 port) which eliminates the need for any extra drivers. Sending and receiving can be done in standard ASCII format.

priced from £61.00 (CAN-232)

USB Instruments - PC Oscilloscopes & Logic Analyzers
Our range of PC Instruments may be budget priced but have a wealth of features normally only found in more expensive instrumentation. Our DS1M12 and PS40M10 oscilloscopes have sophisticated digital triggering including delayed timebase and come with our EasyScope oscilloscope / spectrum analyzer / voltage and frequency display application software and our EasyLogger data logging software. We also provide Windows DLLs and code examples for 3rd party software interfacing to our scopes.
Our ANT8 and ANT16 Logic Analyzers feature 8/16 capture channels of data at a blazing 500MS/S sample rate in a compact enclosure.

priced from £125.00 (DS1M12 & ANT8)

1 to 16 port USB to Serial Adapters
With over 16 different models available, we probably stock the widest range of USB Serial Adapters available anywhere. We offer converter cables, multi-port enclosure style models in metal and plastic, also rack mount units with integral PSU such as the USB-16COM-RM. Serial interfaces supported include RS232, RS422 and RS485. We also supply opto-isolated RS422 and RS485 versions for relaible long distance communications. All our USB Serial products are based on the premium chipsets and drivers from FTDI Chip for superior compatibility, performance and technical support across Windows, MAC-OS, CE and Linux platforms.

priced from £20.00 (US232B/LC)

UPCI Serial Cards
Discover our great value for money range of multi-port UPCI serial cards. Supporting from two to eight ports, the range includes RS232, RS422, RS485 and opto-isolated versions. Our 4 port and 8 port models can connect through external cables or the innovative wall mounting COMBOX.

priced from £21.00 (UPCI - 200L)

EasySync Ltd
373 Scotland Street
Glasgow G5 8QB U.K.
Tel: +44 (141) 418-0181 Fax: +44 (141) 418-0110
Web : http://www.easysync.co.uk
E-Mail: sales@easysync.co.uk

* Prices shown exclude carriage and VAT where applicable

05 **EDITOR'S COMMENT**
POWER ON THE MENU

06 **TECHNOLOGY**

10 **TOP TEN TIPS**

12 **INSIGHT**
CYBER-CRIME: CAN VISTA SAVE THE DAY by **DR HAMID JAHANKHAN**

14 **FOCUS**
FUTURE STEALTH DESIGN by **Dr Chris Lavers**

19 **THE TROUBLE WITH RF...**
EVER WONDERED WHAT'S INSIDE A "MULTICHANNEL" MODULE? by **Myk Dormer**

FEATURES

21 BUILT-IN ANTENNA FOR FM RADIO RECEPTION AND TRANSMISSION IN MOBILE PHONES
Peter Lindberg and **Andrei Kaikkonen** discuss the possibility of using small internal antennas in portable devices for FM reception as perfectly viable, and give design details and measured characteristics of an active antenna

27 POWERING LED ARRAYS IN BACKLIGHT APPLICATIONS
David Sorlien discusses an op-amp which can power more than eight LEDs and which help implement applications that require a constant light output

31 A CLOSER LOOK AT PHASE DELAY
Hugo Coolens analyses the extra facets of phase and phase delay

34 KEEPING THE LID ON NON-SOLID SMD ELECTROLYTIC CAPACITORS DURING A LEAD-FREE REFLOW SOLDERING
Franz Wiser explains the challenges facing component manufacturers when working with aluminium electrolytic capacitors and the new directives

38 PACKAGING OF PASSIVE AND ACTIVE COMPONENT TECHNOLOGY
Bob Hunt analyses the needs of the automotive, aerospace and defence industries for packaging components

REGULARS

40 **UKDL**
LET THERE BE LIGHT by **Chris Williams**

42 **CIRCUIT IDEAS**

44 **TIPS 'N' TRICKS**
Power supply building, digital level and analogue translation blocks * Optimising gate timing with an external FET driver for high input voltage step-down converter

50 **BOOK REVIEW**

51 **ROHS**
Gary Nevison answers readers' questions relating to the RoHS and WEEE directives

52 **PRODUCTS**

ELECTRONICS WORLD

has now gone online

www.electronicsworld.co.uk

You are clicks away from your own copy of the magazine – *faster than ever!*

Here, you can register for:

- key-word searches
- article searches
- customised newsletters
- buy any edition of the magazine – including the latest one, before it hits the newsstands
- buy CDs of past articles from different years
- chat on our exclusive forum with like-minded professionals
- comment on articles
- buy techy items
- get software code, references and additional material on certain articles run in the magazine
- win prizes

So, don't waste any time and go to Electronics World's website now!

www.electronicsworld.co.uk

ELECTRONICS WORLD

EDITOR:
Svetlana Josifovska
Email: svetlana.josifovska@stjohnpatrick.com

PRODUCTION EDITOR/DESIGNER:
Tim Wesson

DISPLAY SALES EXECUTIVE:
Matthew Dawe
TEL: +44 (0) 20 7933 8999
Email: matthew.dawe@stjohnpatrick.com

EDITORIAL DIRECTOR:
Melony Rocque

SALES DIRECTOR:
Chris Cooke

PUBLISHER:
John Owen

SUBSCRIPTIONS:
Dovetail Services
800 Guillat Avenue,
Kent Science Park,
Sittingbourne,
Kent, ME9 8GU
TEL: +44 (0) 870 428 1426
Email: saintjohnpatrick@servicehelpline.co.uk

SUBSCRIPTION RATES:
1 year: £46 (UK); €120 (Europe);
$145 (US & worldwide)

NEWSTRADE:
Distributed by Seymour Distribution Ltd,
2 East Poultry Avenue, London, EC1A 9PT
+44 (0) 20 7429 4000

PRINTER:
William Gibbons Ltd

St John Patrick Publishers

POWER ON THE MENU

As our homes and offices stock up on the latest consumer electronics systems and gadgets it is not surprising to see a new trend that is developing in parallel – the trend for research and reports that confirm that we are using far too much power (as if we didn't know!).

According to just one of these reports, entitled "*The Ampere Strikes Back*", by year 2020 electricity needs in UK households alone are likely to treble. To be able to meet this demand we'll need the output of 14 more power stations. We are told that worst offenders are large screen digital TVs and digital radio receivers. Whereas the old cathode ray tube TVs consumed between 50 and 100 watts, today's LCD flat-screen TV consume more than 300W. Even listening to the radio is not as an innocuous a pastime of yesteryear's, as the digital radios require four times more power than the old analogue set, and if you are lazy enough to listen to it via your digital TV set or set-top box, this rises to a staggering 100W.

So, what are consumer electronics companies going to do about it?

First, we are going to have 'The Discovery!' – that power is an issue which we will all need to address very soon.

Then there will be 'The Warnings'. Only last week, German IC supplier Infineon Technologies "warned" of the growing demand for power in the consumer electronics sector. Others will follow.

Then, we will have 'The Small Steps Forward': even now German TV maker Loewe claims that two of its LCD flat screens consume between 150 and 165 watts of power respectively, a lot lower than the average LCD screen. But this is hardly 'The Progress'. And at this stage, real progress is hard to envisage as most are still in the 'The Blinkered Mode': where they don't know or it doesn't make economical sense to acknowledge that there is a problem.

Oh yes, there's a lot of work going on tackling power consumption, but most of it is for portable devices – the mobile phones, the PDAs, the laptops – and not much for having a particularly low power digital set-top box or plasma screen.

I once asked an executive of a company developing ICs that go into consumer electronics systems if they have started addressing the power issue. He said: "Oh no, we don't have to do that just yet; [consumer electronics] OEMs are [still] only interested in low costs [of ICs]." This was only a few months ago and I can't imagine that much of the development work has changed course at that company since – or other, similar ones, for that matter. But, it's time that it did and power is placed firmly on everybody's menu where it should stay for a long time.

Svetlana Josifovska
Editor

Electronics World has now gone online **(www.electronicsworld.co.uk)**. You are clicks away from your own copy of the magazine – faster than ever! Here, you can register for key-word searches, article searches and to receive customised newsletters. For those who are not subscribers of *Electronics World*, the website offers the e-commerce facility which will allow you to buy any edition of the magazine on-line – including the latest one.

Your feedback on how Electronics World's website looks and feels, as well as what you'd like to see on it in the future, will be greatly appreciated. Please write to me at svetlana.josifovska@stjohnpatrick.com

Electronics World is published monthly by **Saint John Patrick Publishers Ltd**, 6 Laurence Pountney Hill, London, EC4R 0BL.

Disclaimer: We work hard to ensure that the information presented in Electronics World is accurate. However, the publisher will not take responsibility for any injury or loss of earnings that may result from applying information presented in the magazine. It is your responsibility to familiarise yourself with the laws relating to dealing with your customers and suppliers, and with safety practices relating to working with electrical/electronic circuitry – particularly as regards electric shock, fire hazards and explosions.

Mobile phones not given clean bill of health in hospitals

Mobile phones can interfere with hospital equipment, confirms a latest study from the University of Amsterdam.

Until now, mobile phones were largely banned from hospitals, even though more recently the government showed signs of condoning their use, which resulted in 'relaxed rules' to allow mobile phones on wards.

According to the study, however, handset signals can interfere with medical equipment nearly three meters away. The researchers found that mobile phones interfered with 26 out of 61 medical devices, which included dialysis machines, pumps and even external pacemakers. Out of the 48 separate incidents recorded a third were considered hazardous, meaning they could risk the life of a patient. The interferences' strengths depended largely on the distance away from the medical equipment.

"The one-meter rule, as the minimum distance to keep a mobile phone away from medical equipment or the bedside as proposed in the past, seems safe, although the rule does not exclude electromagnetic interference by new generation mobile phones entirely," said Dr Erik van Lieshout of the Dutch research team.

The scientists who carried out the tests say that hospitals should ban mobiles from wards. "Our work has real implications for present restrictions of mobile phone use in patient areas," confirmed Dr van Lieshout.

Mobile phones can interfere with medical equipment

PAPER BATTERY AIMS TO POWER A CAR SOME DAY

Flexible, thin and powerful but also small for the time being – the new paper-type battery from the Rensselaer Polytechnic Institute

Researchers at the Rensselaer Polytechnic Institute in the US have created a new energy storage device that is thin, flexible and as light as a sheet of paper.

It is made of aligned carbon nanotubes, which act as electrodes. The nanotubes are embedded in a sheet of paper soaked in ionic liquid electrolytes. The battery can function between temperatures of 100 Fahrenheit below zero to 300 degrees Fahrenheit. The device is also unique as it can function as a high-energy battery or a high-power supercapacitor, which are generally separate components in most electrical systems.

The team's first 'battery' is a sheet a little larger than a postage stamp but one that can release about 2.3V. If several such sheets were to be stacked, the output will increase. Being flexible, the battery can function when rolled up, folded or even cut.

"If we stack 500 sheets together in a ream, that's 500 times the voltage," said Robert Linhardt, professor of Biocatalysis and Metabolic Engineering at Rensselaer. "If we rip the paper in half we cut power by 50%. So we can control the power and voltage issue."

Although the paper-type battery's first use could be in portable systems and implantable medical devices, the team's ambition is to create a sheet large enough to power cars, boats and even planes, where the light weight is of critical importance. Such a commercial reality, however, might take some time as carbon nanotubes are very expensive to produce, and batteries large enough to power a car are unlikely to be cost-effective.

Professor Linhardt is not discouraged: "The devices we're making are only a few inches across. We would have to scale up to sheets of newspaper size to make it commercially viable; but at that scale, the voltage could be large enough to power a car."

Parallel Processing Offers Supercomputer Performance on the Desktop

A prototype computer for desktop use that is claimed to be one hundred times faster than current desktop machines has been developed by Uzi Vishkin and his colleagues in the James Clark School of Engineering at the University of Maryland. It is based on parallel processing on a single chip, an approach that lets the computer perform many different tasks simultaneously, unlike the serial techniques used in conventional desktop computers.

Although large scale parallel processing using many interconnected chips or computers has been in use for many years in various forms of supercomputer, its use in desktop systems has been very difficult owing to severe programming complexities. The Maryland group found a way to use a single chip parallel processing technology to change this situation with special algorithms.

The prototype device's physical hardware attributes are strikingly like those of ordinary standard computer blocks executing at just 75MHz. It is the device's parallel architecture, ease of programming and processing performance relative to other computers with the same clock speed that get attention. Vishkin's system represents a significant improvement in generality and flexibility for parallel computer systems because of its unique abilities. It can exploit a wider spectrum of parallel algorithms than today's microprocessors and this in turn will help to bring general purpose parallel computing closer to reality.

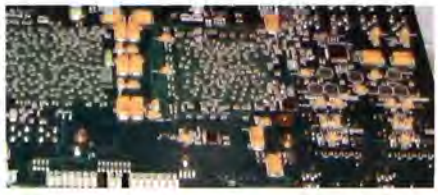

Viskin's desktop supercomputer board

The prototype was constructed on a circuit board about the size of a car registration plate on which 64 parallel processors were mounted. These processors are controlled by a parallel computer organiser that enables the processors to work together and makes the programming practical and simple for software developers.

Vishkin and his team are now demonstrating their technology, which in future systems could include 1,000 processors on a chip the size of a finger nail for use by government and industry groups.

THz Waves View Inside Living Trees

In order to maximise the value of trees in some Canadian forests in British Columbia, terahertz waves are being used to image the internal condition of each tree growing in the forests.

The THz system has been developed by Professor Matt Reid and his colleagues at the Advanced Laser Light Source in Montreal. They use ultra fast lasers to generate what is claimed to be the highest energy bursts of THz radiation yet produced. His group is now seeking ways to apply the THz waves to industrial applications by seeing through objects in real time. For the forestry work, they are collaborating with researchers at the University of Northern British Columbia in Canada.

Forestry makes the largest contribution to the economy of British Columbia. The industry needs a technology to see the insides of the trees so that, after they have been felled, the logs they provide can be optimally positioned in the mills to achieve a maximum value from the resulting wood.

IN BRIEF

MuleSource, the provider of open source infrastructure and integration software, launched MuleForge (www.muleforge.org/), a shared community environment, offering a fully managed hosting site for Mule extensions and applications for the Mule ESB. MuleForge offers a platform where developers can explore, download, test and contribute to a broad range of re-usable Mule extensions. In addition to applications and extensions for the Mule project, the forge offers tips, documentation and other resources. MuleForge is becoming an increasingly powerful tool for developers looking for resources, extensions and examples on how to use Mule on integration projects, and as such saving on time, developer resources and lowering the total cost of ownership.

British astronomers from the University of Cambridge and the California Institute of Technology (Caltech) have developed a new camera using e2v's L3Vision imaging sensors that gives much more detailed pictures of stars and nebulae than even the Hubble Space Telescope, and it does all this from the ground.
Whilst a technique called adaptive optics has been successfully used to reduce atmospheric blurring of infra-red images from ground-based telescopes, a new noise-free, high-speed camera has been developed at the Institute of Astronomy in Cambridge which at last makes very high resolution, ground-based imaging in the visible spectrum a possibility. At the heart of e2v's L3Vision technology are a series of Charged Coupled Device (CCD) imaging sensors so sensitive that they can detect individual photons.

The government of Ontario will provide $40m to fund a new Centre for Engineering Innovation at the University of Windsor. This new manufacturing courtyard will bring industry and academia into much closer contact on a daily basis, which is a strong desire from the province.
"In today's global economy, we've got to be better than our competitors," said Sandra Pupatello, Minister of Economic Development and Trade. "Ontario's future depends on our ability to be leaders in ideas and innovation. With a highly skilled and innovative workforce, the Centre for Engineering Innovation will attract high value research and new investment to the province.

OP-AMP FIT FOR A PORTABLE CIRCUIT

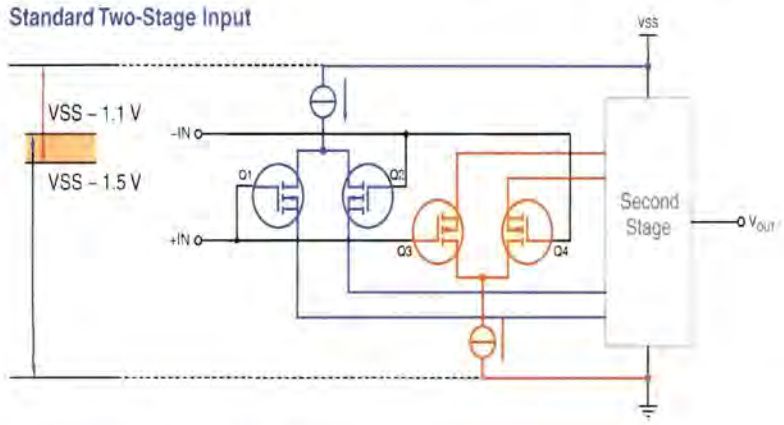

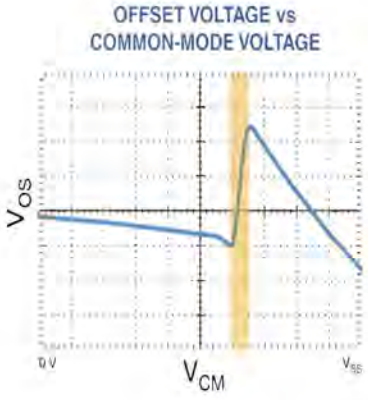

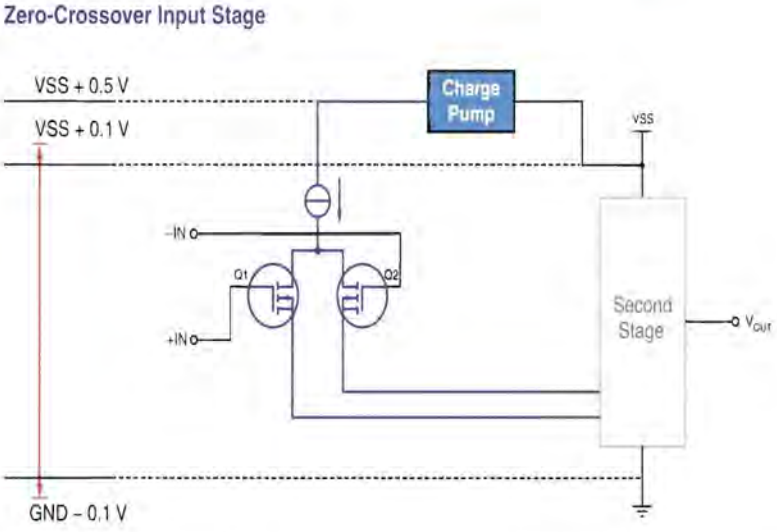

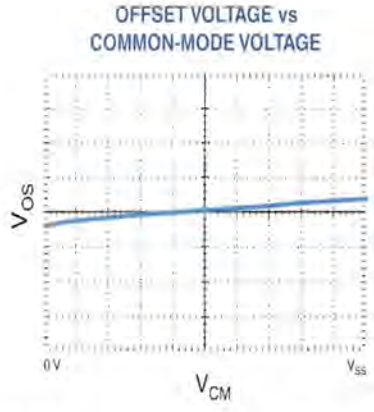

Rail-to-rail op-amp inputs comparison

Texas Instruments (TI) has launched a low power, zero-crossover op-amp, which it hopes will help designers who often need to choose between power consumption and the AC/DC performance of their signal conditioning amplifiers.

TI's OPA369 has a single input and, yet, the performance is matched to that of a rail-to-rail op-amp. With the single input, the op-amp does away with the input offset distortion (due to the change in common mode voltage) that exists in low-voltage, rail-to-rail applications.

"Our new op-amp combines two development trends that we'd identified: zero-crossover products and devices demanding serial power of around 1µA, or in other words, zero-crossover and low power," said Christoph Gromann, EMEA business development manager for high performance analogue devices at TI.

In rail-to-rail op-amps, there are two inputs and there will be a point where both of them will work simultaneously. This causes an undesirable offset voltage spike. In the zero-crossover solution, there's only one input and the in-circuit charge pump allows for a smoother offset voltage.

The OP369 was developed in TI's analogue CMOS process technology, the HPA07. The device delivers offset voltage of 750µV over the entire rail-to-rail input range and a common-mode rejection ratio (CMRR) of 100dB minimum, which allows for a wider useable input dynamic range for low supply voltage applications. Among its other features are low noise of 120nV/rtHz, gain bandwidth of 12kHz on 1µA, low input bias current of 50pA maximum, low voltage offset drift of 1.75µV/°C (max), PSRR of 94dB and low 1/f noise of 3.6µVp-p (0.1 to 10Hz).

The op-amp is yet another device in a series of products TI is aiming at the low power, small package, portable systems market. The firm recently also launched a new, low-cost DaVinci processor – the TMS320DM355 – which can handle HD video formats in portable devices, such as video phones, cameras and security systems.

HANDYSCOPE HS4

Four channels not enough

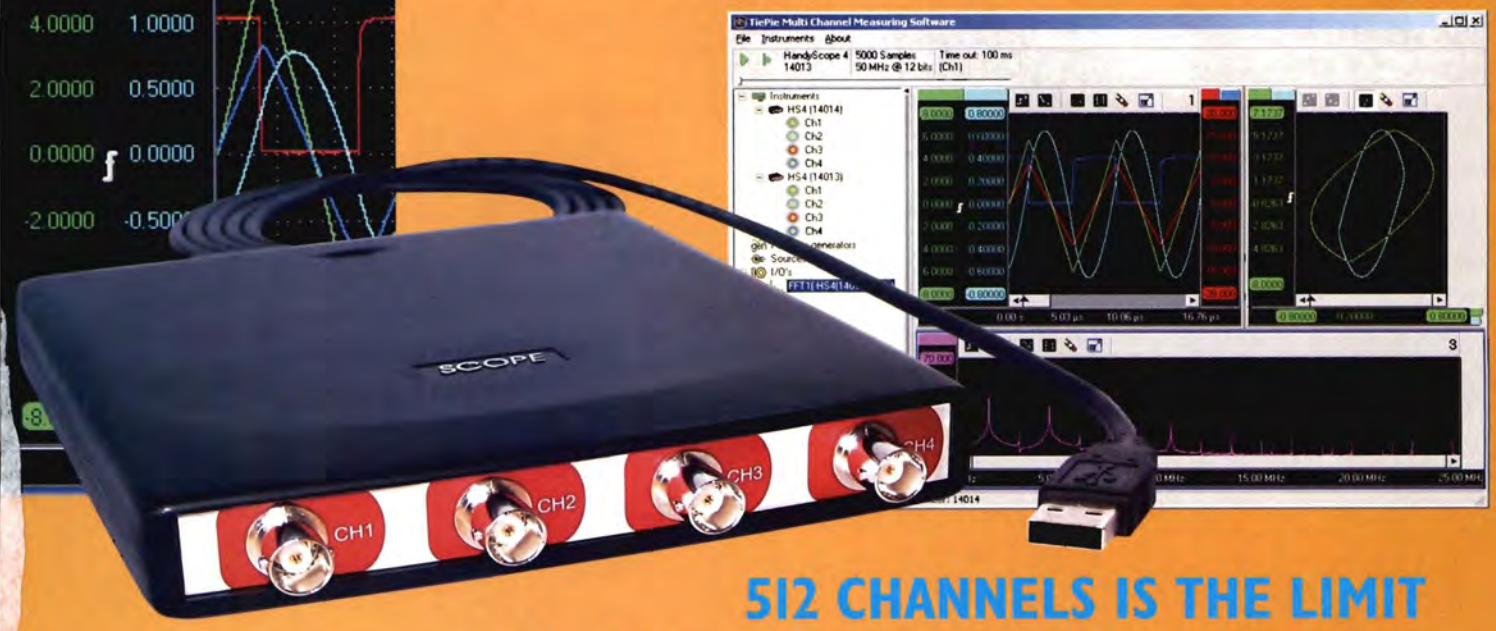

512 CHANNELS IS THE LIMIT
COMPLETE PACKAGE STARTING AT £ 440

The Handyscope HS4 (50MHs 12/14/16 bit) is a powerful and versatile four channel measuring instrument with extension

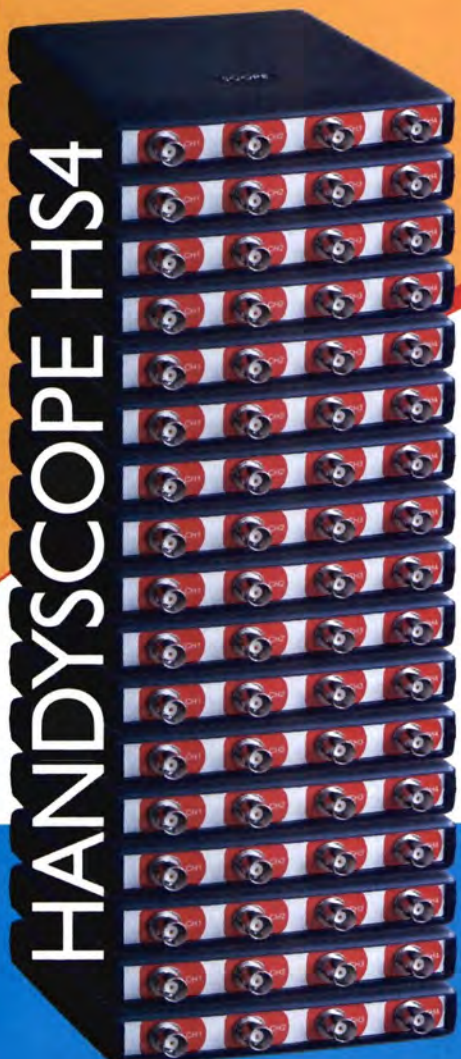

The Handyscope HS4 starts a new standard for multi channel measuring.

It offers perfect measure qualities and through the USB connection it is easy to connect to every PC. Because of the very versatile software it becomes simple to extend the instrument to 512 channels.

A four channel, 12-16 bit oscilloscope, spectrum analyzer, transient recorder and voltmeter created as a most compact instrument.

- Making virtual instruments (combine maximum of 128 instruments)
- Extension to maximum of 512 channels.
- USB 2.0 connection (USB 1.1 compatible)
- Sample speed up to 50 MHz per channel
- 12 to 16 bit resolution (6 µVolt resolution)
- 25 MHz bandwidth
- Input sensitivity from 200 mVolt up to 80 Volt
- Large memory up to 131060 samples per channel
- Four integrated measuring devices
- Spectrum analyzer with a dynamic range of 95 dB
- Fast transient recorder up to 100 kHz
- Several trigger features
- Auto start/stop triggering
- Auto disk function up to 1000 files
- Auto setup for amplitude axis and time base
- Auto trigger level and hysteresis setting
- Cursor measurements with setup read-outs
- Multi window signal display
- Multi channel display

WWW.TIEPIE.NL

for more information, demo software, software, source code and DLL's visit our internet page: http://www.tiepie.nl

TiePie engineering (NL)
Koperslagersstraat 37
8601 WL SNEEK
The Netherlands
Tel: +31 515 415 416
Fax: +31 515 418 819

TiePie engineering (UK)
28, Stephenson Road, St. Ives
Cambridgeshire, PE17 3WJ, UK
Tel: 01480 - 300695
Fax: 01480 - 461654

© Copyright 2005 TiePie engineering. All rights reserved.

Top Ten Tips

Training Multimedia Tips for Managers

01. Talk to your IT department

You may well be right and that is half the problem. Many people now have a more powerful, multimedia capable PC at home than they do on their desk at work. To save money and to prevent viruses, 'trojans' and other undesirables from getting into the network, IT departments issue PCs without CD/DVD drives and without soundcards.

In fact, what you are looking at now may not be a PC but simply a terminal on a thin client network.

If you are going to embark on delivering training through multimedia, you need to get IT on your side from the beginning:

- Can they upgrade at least one PC per branch or site so that it is multimedia capable?
- Would they be happier if it was a standalone machine, maybe a laptop, not connected to the network?
- If you want to deliver e-learning over your intranet, will they allow you the bandwidth – bearing in mind that training is going to get a lower priority than operational traffic, even though your application may be more bandwidth hungry?
- Is there a specific piece of authoring/design software they want you to use for ease of future maintenance?
- Is the browser Java enabled?
- Is it OK to use Flash?

02. Choose the right medium

Intranet? CD-ROM? DVD? Even a traditional video and workbook may do the job. The deciding factors are, obviously: what's possible in terms of your IT set-up, organisation and budget, as well as your training objectives. Don't forget that material can readily be converted between media and also upgraded and extended as time and money permit. Existing video can be recycled as part of a CD-ROM or streamed over your intranet, for example.

03. Feel the flexibility

Multimedia is amazingly flexible; use this to your benefit. What this means is that you can create a package of learning material that is automatically tailored to the needs of the individual learner. This may take the form of navigation set up at the start ("click here if you are a sales advisor/manager/administrator/other"), which then takes the learner on a specific route through the material. Or it may be more sophisticated, using tests to find out how much the learner already knows and maybe even their learning style, and so refining the route even further. This gives you a wider audience, more value from your investment in the material and, hopefully, a better result in terms of learning.

04. Make your multimedia interactive

Interactivity means more than having a button to take you to the next page. Some e-learning packages are really just electronic books and might be better on paper, especially as most people find it easier to read large amounts of text off paper rather than off a screen. Your authoring tool (the software used to construct the package) should allow you to set and record a variety of quizzes, tests and games, as well as displaying text and graphics, playing audio and video, etc.

By and large, people learn by doing. The closer you can get to a simulation of the situation or process you are teaching them about, the more realistic and involving the learning environment will be.

05. Grab their attention

Face the fact that a lot of your learners, particularly those trying to study through e-learning at their own desk, rather than at a learning centre, will have distractions. The phone will ring, colleagues drift by, and supervisors ask questions... Some people won't be motivated to learn, particularly if it's obligatory refresher training – financial compliance or aviation safety, for example.

A challenging, media-rich learning experience, particularly if you can put a novel spin onto the content and presentation, is more likely to win the learner's interest than a worthy but predictable electronic lecture.

06. Use 'carrot and stick'

Motivation is very important. Studies suggest that anywhere between 20% and 70% of corporate online learners fail to complete the course. Carrots can include making it obvious from the start that the learner is going to get some value and enjoyment from the course or even awarding prizes or cash to people to finish successfully.

Sticks can include excluding people from a further activity until they have completed the course or, in the case of one German car company, a financial penalty on the dealership or department if all their staff have not completed by a certain date.

07. Aim for 'blended' learning

This means blending input from a human tutor with the online training. This helps with motivation, both because there is someone there to encourage learners and because there are concrete deadlines. It

also means learners can get answers to their questions. If they can't do that, it can be very discouraging.

Learners can attend in person sessions scheduled between online modules or this can be achieved electronically, using Virtual Classroom technology over the internet/intranet.

08. Remember that people have different learning styles

You need to take into account how people learn, particularly when they're at a distance. There are some 70 models which describe this (see the Learning & Skills Research Council www.lsda.org.uk). Are your people "convergers" or "divergers", "activists" or "reflectors", "intuitionists" or "analysts"? Advice from a professional instructional designer may help. "Pedagogic sheep dip" is the term for including a variety of elements in the online learning which you hope will appeal to all types.

09. Manage the learning

- Who's registered for the course?
- How much time have they spent on it?
- Have they finished?
- Have they understood it?

These are some of the questions that a Learning Management System (LMS) will answer for you. If you need to record this for compliance, legal or safety reasons, this is invaluable. An LMS is a specialised database and can be costly; if you only need limited information, somebody could write a piece of software quite inexpensively.

If your material and your LMS comply with the SCORM (www.adlnet.org) and/or AICC (www.aicc.org) standards, most commercial, off-the-shelf online learning material you buy will also work through the LMS.

10. Model, pilot, test

The larger the project, the more important to model and develop the material in stages. Design and author a series of pages or learning objects so that you can get a sample of your audience to try them out and report back.

Because multimedia is put together as a series of interlocked files, it is very easy to tweak and refine on a small scale, rather than have to rework the whole project when it's all but completed.

The more sophisticated LMS can identify where trainees are struggling or losing interest. And, of course, before you release the final product, it should be fully tested and bug free.

This month's top ten tips were supplied by Kevin Rossiter of Rossiter and Co. To view training multimedia samples visit www.rossiterandco.com/Training.htm

If you want to send us your top tips on any engineering and design subject, please write to the Editor: **svetlana.josifovska@stjohnpatrick.com**

www.stewart-of-reading.co.uk

Check out our website, 1,000s of items in stock.

PM3082 - £195

HP 34401A - £500 to £550

HP33120A - £575 to £700

HP 8563A - £6,000

MARCONI 2024 - £1,250 to £1,500

DIGITISING/STORAGE OSCILLOSCOPES

HP 54616B Digitising 500MHZ 2GS/S 2 Channel £1,100
TEKTRONIX TDS520 Digitising 500MHZ 500MS/S 2 Channel £800
TEKTRONIX TDS360 Digitising 200MHZ 1GS/S 2 Channel £650
TEKTRONIX 2232 Dual Trace 100MHZ 100MS/S £325
HP 54600B Dual Trace 100MHZ 20MS/S with RS232, 2HP Probes, Ops Manual, Pouch & Front Cover £325
TEKTRONIX TDS224 Digitising 100MHZ 4 Channel 1GS/S £750

SCOPEMETERS

FLUKE 97 Dual Trace 50MHZ 25 MS/S £295

OSCILLOSCOPES

TEKTRONIX 2465B 4 Channel 400MHZ Delay Cursors etc incl. Tek Probes £750
PHILIPS PM3082 2+2 Channels 100MHZ Delay TB etc Autoset £195
TEKTRONIX 2445A 4 Channel 150MHZ Delay Sweep Cursor etc £375
GOULD OS300 Dual Trace 20MHZ £75
PHILIPS PM3217 Dual Trace 50MHZ Delay Sweep £125
FARNELL DTV12-14 Dual Trace 12MHZ £40
TEKTRONIX P6139A 100MHZ Probes - Unused £140

SPECTRUM ANALYSERS

HP 8563A 9KHZ-22GHZ Synthesised £6,000
HP 8560A 50HZ-2.9GHZ Synthesised Various opts ..... £1,900-£3,250
HP 8590A 10KHZ-1.5GHZ £1,400
HP 3580A 5HZ-50KHZ £295
ADVANTEST TR4132 100KHZ-1000MHZ £750

SIGNAL GENERATORS

HP 83731A Synthesised 1-20GHZ £5,000
Marconi 2032 Sig Gen 10KHZ-5.4GHZ Opt 01/02/06 - Avionics £3,250
HP 8648A Sig Gen 0 1-1000MHZ £750
Gigatronic 7100 Synth 10MHZ-20GHZ (internal sweep/mod - 130 to +15dBM) £3,000
Marconi 2024 9KHZ-2.4GHZ - HPIB used/unused ..... £1,250-£1,500
Marconi 2022E Synthesised AM/FM 10KHZ-1.01GHZ £500
Marconi 2019/A Synthesised AM/FM 80KHZ-1040MHZ ..... £150-£195
HP 33120A Function Gen 100 microHZ-15MHZ used/unused ..... £575-£700
T.T.I TG210 Function Gen 0.002HZ-2MHZ TTL etc £70
R&S APN62 Synth Function Gen 1HZ-260KHZ Bal/Unbal Output LCD £195
Metrix GX5000 Pulse Gen 50MHZ Programmable £150
HP 3325A Synthesised Function Gen 21MHZ £295
HP 3312A Function Gen 0.1HZ-13MHZ AM/FM Sweep/Tri/Burst etc £175
HP 8112A Pulse Gen 50MHZ £350
HP 8116 Pulse/ Function Gen 50MHZ £750
Gould J3B Sine/Sq Osc 10HZ-100KHZ Low Distortion ..... £50-£75

FREQUENCY COUNTER/ TIMERS

HP 5350B Counter 20 GHZ £750
Marconi 2440 Counter 20 GHZ £500
Racal 1998 Counter 10HZ-1.3GHZ £225
Racal 1991 Counter/Timer 160MHZ 9 Digit £150
HP 53131A Universal Counter 3GHZ Opt 001 oven unused/used ..... £995/£750
HP 53131A Universal Counter 225MHZ Oven-In original boxes - unused/used ..... £700/£600

DIGITAL MULTIMETERS

HP/Agilent 34401A 8 1/2 Digit ..... £500/£550
Solartron 7150Plus 6 1/2 Digit True RMS IEEE with tem measurement £75
Fluke 77 series 2 3 1/2 Digit Handheld £45
AVO 8 Mk6 In Ever Ready Case with Leads etc £75
AVO 8 Mk5 with Leads etc £50
Goodwill GVT427 Dual Ch AC Millivoltmeter 10mV in 12 ranges 10HZ-1MHZ. Unused £60

MISCELLANEOUS

MARCONI 2955A Radio Communications Test Set £1,000
MARCONI 2955 Radio Communications Test Set £625
MARCONI 6960B RF Power Meter with head £500
MARCONI 893C AF Power Meter Sinad Measurement Unused £50
HP 4192A Impedance Analyser with 16047A Text Fixture etc £3,500
HP 8902A Measuring Receiver 150KHZ-1300MHZ £4,500
HP 85032A Calibration Kits £400
SEAWARD Nova Pat Tester £195
BIRD 43 Wattmeter - Many Elements Available £75
HUNTRON 1000 Tracker £75
RACAL DANA 9343M LCR Databridge Digital Auto Measurements of RCL QD £95
RACAL 9008 Automatic Modulation Meter 1.5MHZ-2GHZ £80
MEGGER PAT2 Tester £95

POWER SUPPLIES

FARNELL AP60/50 0-60V 0-50A 1KW Switch Mode £400
FARNELL H60/250-60V 0-25A £400
THURLBY PL320QMD 0-30V 0-2A Twice Digital £180
H.P. 6628A Precision High Resolution 4 Outputs 0-7V 0-15MA or 0-50V 0-0.5A Twice 0-16V 0-0.2A or 0-50V 0-2A Twice £500
FARNELL XA35.2T 0-35V 0-2A Twice Digital £95
FARNELL B30/10 30V 10A Variable No Meters £55
FARNELL LT30-1 0-30 0-1A Twice £80
FARNELL L30.2 0-30v 0-2A £50
THURLBY PL330 0-32V 0-3A Digital (Kenwood badged) £75
THURLBY PL320 0-30V 0-2A Digital £55
TAKASAGO GM035-2 0-35V 0-2A 2 Meters £35

STEWART of READING
17A King Street, Mortimer, Near Reading RG7 3RS
Telephone: (0118) 933 1111
Fax: (0118) 933 2375
www.stewart-of-reading.co.uk
9am-5.00pm Monday to Friday

Used Equipment – GUARANTEED. Most Manuals supplied
Please check availability before ordering or calling.
Prices plus carriage and VAT

CYBER-CRIME: Can Vista Save the Day?

MICROSOFT'S WINDOWS VISTA SOFTWARE IS NEARLY A YEAR OLD, BUT HAS IT BROUGHT THE BENEFITS PROMISED BY THE COMPANY, ESPECIALLY NOW WHEN CYBER SECURITY IS OF PARAMOUNT IMPORTANCE, ASKS DR HAMID JAHANKHANI, PRINCIPAL LECTURER AT THE UNIVERSITY OF EAST LONDON (UEL) SCHOOL OF COMPUTING AND TECHNOLOGY

Cyber-crime is now the world's biggest growth industry and law enforcement agencies are struggling to cope with the wealth of opportunities that rapid technological advances have created for a new breed of criminal. The menace of organised crime and terrorist activity grows ever more sophisticated, in line with the increasing ability of criminals to enter, control and destroy our electronic and security systems. Nations, governments, corporations and individuals are all under threat.

At the beginning of the year, Microsoft launched its long-awaited Windows Vista, immediately heralding the system as a revolution in computer security. Vista is being promoted as the most secure and trustworthy version of Windows yet, but it remains to be seen whether the new software will prove reliable enough to make a real difference to levels of cyber-crime. Some have been quick to write off its chances.

Vista contains many features that appear to make existing commercial products redundant, so developers of such products have inevitably sought to stress the perceived flaws of Microsoft's latest release. So how flawed really is this software and how much of an impact can it actually have in the war against cyber-crime?

In many ways, we've been here before: Microsoft made similar claims before the release of Windows XP, but hackers proved up to the challenge. The key difference this time is the new Patchguard system, a feature of Vista's 64-bit version. Patchguard makes it difficult for people to interfere with the Windows kernel – the very centre of its operating system. Together with the drivers, the kernel has ultimate control over the computer; for a virus to operate undetected it needs to interfere and modify the kernel software in order to gain control. If Patchguard could prevent this from happening it would unquestionably be of great benefit.

Unfortunately, many legitimate software developers also interfere with the Windows kernel, meaning that Patchguard has enemies outside of the criminal underworld, including most of the current anti-virus vendors. Vista 32-bit doesn't include Patchguard or any other new restrictions, allowing users the option to run most existing hardware and software, but denying them the enhanced security.

Although Patchguard makes it difficult to interfere with Windows, it doesn't prevent it completely. Put simply, a virus can turn off Patchguard before proceeding to modify the kernel as normal. For technical reasons, this situation will last until the next generation of processor chips is delivered with special security features. There is simply no way that Microsoft can get around the existing hardware limitation.

Critics point to Patchguard's current flaws as an example of Microsoft's security problems. However, by using more advanced processor chips, future versions of Patchguard will be very secure indeed. Releasing the imperfect Patchguard now is a warning to legitimate software companies: stop interfering with the Windows kernel – in future, your products will simply

The brunt of any security problems will be borne by individual home users, who will not have commercial-grade security measures in place or a team of IT specialists on site ready to address problems

no longer work.

With Vista, Microsoft has also rewritten all the software that a PC uses to talk to the network – what's known as the 'network stack'. It's widely understood in the industry that new code always contains new bugs, so there is a real risk that unknown problems will be found with Microsoft's new network stack. Cyber criminals are now busy working away to discover what they are and how they can best be exploited.

Large organisations are very unlikely to start using Windows Vista until it has proved to be reliable over a reasonable period of time. The brunt of any security problems will therefore be borne by individual home users, who will not have commercial-grade security measures in place or a team of IT specialists on site ready to address any issues. Criminals finding loopholes in the new network stack could have launched an attack as of the software's immediate release, but it was always more likely that they would wait until a large number of vulnerable Windows Vista machines had been installed. This could make for a very interesting second half of 2007.

Windows Vista includes the Windows Defender system, previously known as Microsoft AntiSpyware. This is an anti-virus program by another name, and third-party anti-virus vendors are understandably unhappy to see their market being eroded. Windows Vista also incorporates an improved firewall. Whilst no anti-virus software is fully effective, having Windows Defender enabled on every new machine is likely to have a similar effect in cutting down the number of viruses in circulation.

There are many other security enhancements in Windows Vista, most of which are available as free upgrades for users of Windows XP. Whilst Microsoft may wish to play up the release of their new product as a revolution, many of the security enhancements have been available for some time and have already proved to work well. ■

FUTURE STEALTH **WARSHIP DESIGN**

DR CHRIS LAVERS, HEAD OF SENSORS AT THE BRITANNIA ROYAL NAVAL COLLEGE IN DARTMOUTH, THE UK, ANALYSES THE PAST, PRESENT AND FUTURE ELECTRONIC STEALTH DESIGN TECHNIQUES DEPLOYED ON WARSHIPS

BAE Type 45 Destroyer warship

Sun Tzu in '*The Art of War*', ca. 450BC, said: "All warfare is based on deception." Stealth or signature reduction techniques play a large part in that deception.

Stealth is any technique which reduces reflected radiation, mostly with passive measures. Signature reduction involves methods to reduce a platform's own electronic emissions, using largely active methods. The most frequent response when asking about 'stealth' usually involves the F117A stealth fighter, or futuristic warship in the James Bond film '*Tomorrow Never Dies*', or perhaps the 'One Ring' from '*The Lord of the Rings*'. In reality there has been a quiet revolution in modern stealth warship design which has enabled navies worldwide to progress increasingly stealthy platforms.

Stealth technology is a combination of techniques that significantly reduces the range of ship detection, especially Radar Cross Section (RCS) reduction.

The roots of modern radar stealth warship design have much to thank earlier stealth aircraft. The Lockheed F117A Nighthawk, the world's first operational aircraft to fully exploit stealth technology, was intended to penetrate heavily protected enemy environments at night and attack targets with precision accuracy. It was designed to minimise seven signatures that would compromise its location to an enemy: radar, visual, infrared, acoustic and electromagnetic emissions, engine smoke and contrails, making the aircraft virtually 'invisible' against such perceived threats.

The F117A's most apparent stealth feature, its facetted airframe, is composed of multiple angled plates which reflect incident radar energy away from enemy radar, aided by radar absorbent coatings. The cost of aviation stealth is enormous; the F117A fleet cost $6bn whilst the B2 cost even more. Similarly, a ship's cross-sections of greatest concern are: visible, radar, infrared, acoustic and magnetic.

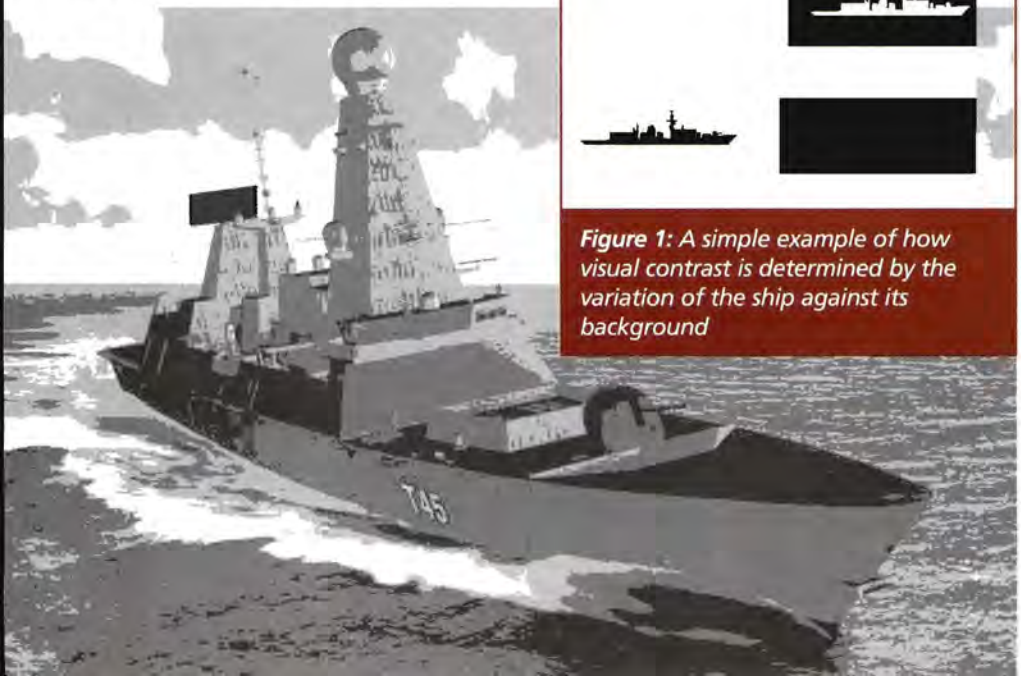

***Figure 1:** A simple example of how visual contrast is determined by the variation of the ship against its background*

Dazzle Painted Warships

Given radar stealth's recent aviation roots it is strange that ship stealth began during World War One. However, as radar was not then deployed on ships, visibility was the principal detection concern. Low visibility is essential for warships. It is generally achieved by colouring a ship so it blends in, inconspicuously as possible, with its background environment.

In April 1917 Naval Reservist Lt. Cdr. Norman Wilkinson, devised a camouflage concept for ships called 'dazzle painting' in response to the high loss rate of torpedoed vessels in the North Atlantic. Rather than trying to paint a ship uniformly to blend it into a non-uniform and against a changing sky and ocean, Wilkinson used colourful cubist patterns to confuse U-boat captains, denying speed and heading accuracy, with the possibility that broken outline patterns could prevent ships being detected altogether.

Rapidly a team of artists painted over 4000 merchant and naval vessels with various stripe styles, blocks and disrupted lines. It was such a success that, by the end of the war under 1% of dazzle painted ships were sunk. After World War, One there was a gradual decline in dazzle camouflage with a focus on deep ocean operations, usually with just grey paint. However, with 21st century emphasis on shallow water operations (littoral) navies are reconsidering disruptive camouflage, of which the Swedish Visby stealth corvette is an example. Furthermore glint, bright reflections from bridge windows and lookout binoculars are now minimised with modern multiple layer anti-reflection coatings.

Figure 3: *Wilkinson's 'The Normandy Landings 6 June 1944' HMS Uranus and HMS Jervis in dazzle camouflage bombarding in the early morning with landing craft waiting to go in*

Radar Stealth

RADAR is the use of reflected microwave radiation to detect targets and is an acronym for Radio Aid for Detection finding And Ranging. Radar first illuminates a target, transmitting a radio pulse at a target. If energy is reflected by a target some may be collected by a receiver.

Radar stealth requires that a ship absorbs incident radar pulses, deflects pulses away from a detector, or actively cancels them. However, a target's detected signal is complex with two parts: the first is its overall size or target cross-section and the second is its identifiable internal detail, or signature. Non-imaging sensors only see a target's Radar Cross-Section (RCS) and obtain only signal size. Size is misleading as similar response is given by both large weakly reflecting targets or by small, strongly reflecting ones.

Radar Signature Reduction

There is a relationship between Maximum Detection Range (MDR) and target RCS σ the target area seen by radar. Key factors determining RCS include: target size, shape, material, aspect angle and frequency, making platform design and evaluation far from simple. RCS is measured in m^2 with a perfect conducting sphere of diameter 1.13m defined as having a RCS of $1m^2$.

A flat plate of area $1m^2$ has an RCS of $14,000m^2$ at 10GHz if radar is perpendicular to its surface. If rotated, or tilted up the energy reflected directly back to a receiver is reduced, as some is reflected to the side, or above respectively, reducing RCS. Because of its importance in determining the MDR, RCS reduction must be 'built into' warship design. With ships having a large RCS the aim is to reduce RCS so that decoys present a comparable or more attractive target, whereas with aircraft, it is possible to make the RCS *so low* that to all intents and purposes aircraft are "invisible" to search radar.

Simplistically radar stealth consists of three basic techniques:

(1) Target materials should have low reflection coefficients, such as plastics, fibre-glass or GRP. Interestingly, wooden warships like Nelson's Victory would have had a relatively low RCS by modern standards.

(2) Radar Absorbent Material (RAM) covers a platform's outer skin, absorbing energy and reducing reflections. There are two types of RAM, resonant and non-resonant. In resonant RAM, a $\lambda/4$ coating is used. A thin film's top and bottom reflections have a path difference of $\lambda/2$ and interfere destructively, reducing reflections. For several wavelengths multiple coatings are required. In non-resonant absorbers, loss is possible over a wide frequency range but is generally not as good as resonant RAM at its resonant frequency.

(3) Modification of ship geometry. One of the largest sources of radar returns is the Corner Reflector, where three plane surfaces meet at 90°, a geometry which reflects energy back towards a receiver, whatever the original incident angle, resulting in high RCS. One solution is to blank off corners with tilted plates or design ships without 90° angles. The Type 23, La Fayette and Kirov class are ships designed to have low RCS and avoid 90° corners, with sloping sides (tumble home) directing energy away from radar and breaking up superstructure into small sections with varied angles, e.g. sections tilted between 5-7°. These generate small broadside 'flashes' during ship motion, nearer to background radar 'noise', rather than a single broadside radar flash. Ships use radar absorbent paint, like that used on the F117A containing carbonyl iron ferrite spheres known as 'iron

Figure 4a: *Visible view of the Mouth of the Dart*

Figure 4b: *Near Infra Red view of the Mouth of the Dart*

Figure 4c: *Thermal view of the Mouth of the Dart, note the hot image of man who has just walked into the scene in the bottom right corner*

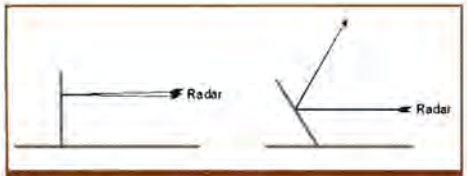

Figure 5: Tilting surfaces reduces back reflections

balls'. Radar waves induce alternating magnetic field in paint, converting radar energy into heat. Coating bridge windows with thin transparent conductors (gold or Indium tin oxide) reduces RCS. Normally waves enter the bridge, bounce off flat surfaces and return to the radar; conductive coatings create controlled shapes that deflect incoming waves away from radar.

Many radar absorbent plastics, carbon-based and ceramics materials were developed for stealth aircraft; combining such materials with radar reducing geometry on ships will enhance stealth.

Design Considerations

One design dilemma for stealth ships is they not only need to be invisible to radar but to use it as well. Ships need conventional radar to track hostile missiles and aircraft and avoid collision hazards which don't have beacons. One solution has moveable absorbent covers over antennae that move aside only if radar is used. Antennae are then vulnerable to detection intermittently, as in the case of the Sea Shadow.

The future RN Type 45 (T45) destroyer integrated mast should have materials transparent only at its operating frequencies but opaque at all others. The Sea Shadow, a test platform for advanced propulsion and signature reduction developed in the 1980s incorrectly called the USS Sea Shadow, has highly angled sides, twin hulls and was the stealth ship prototype in the James Bond film *'Tomorrow Never Dies'*. It includes Low Probability of Intercept (LPI) radar and is a template for platforms such as the Navy Land Attack Destroyer. It resembles early US Civil War 'Iron Clad' vessels with a low profile, but unlike the Iron Clads has diesel electric propulsion with low acoustic signature.

To answer a simple question, is it possible to make a ship totally invisible to radar, the answer must be no, but it can be made very difficult to detect. Theoretically stealth can be detected by radar operating at most frequencies with sufficient power output and conveniently placed receivers. In practice, radar power is limited with often just one receive antenna.

In 1999 Defence Weekly reported Russia's claim to developing a low-cost stealth technique for cloaking aircraft in ionised plasma, absorbing waves and reducing radar reflectivity of otherwise non-stealthy aircraft by a factor of 100+. Plasma would flow back over its fuselage and wings, but the plane would glow, giving an easy target to ground-based defensive systems on dark nights.

Infrared Signature Reduction

All ships emit heat in the Infra Red (IR) region of the electromagnetic spectrum which helps reveal warships, allowing missiles to home onto targets. IR detection is different to radar in that it is passive, detecting emitted energy, whilst radar is an active technique pulsing energy at targets and detecting reflected energy. Passive IR detection is valuable in missile homing heads as their passive nature doesn't reveal them to listening sensors as a radar homing head would.

IR emission is divided into Infra Red Cross Section (IRCS), the total emitted target power, and Infra Red Signature (IRS), the target's detailed distribution of emitters. If ship's IRCS is reduced it should enhance decoys' effectiveness. Imaging sensors, however, see both IRCS and detail, allowing image identification.

To avoid identification it is vital to reduce IRCS and 'blur' signature. Passive ship heat detection depends on several factors: energy emitted towards a detector and on propagation conditions. IR band absorption by atmospheric molecules is highly wavelength-dependent due to vibrations of molecules with three atoms such as water and CO_2, with light sand and sea salt as a further factor.

Warm ships are relatively easy to detect against a cold sea and colder sky background, so warm ships are easier to detect in Arctic waters than in the Caribbean, for example. However, a ship may also be detected as air cooled ship's plating can appear colder than its background. In the 3-5 micron band (short wave) hot objects include: propulsion units' exhaust plumes, uptake and funnel surfaces. This band gives high contrast but poor edge definition, like a bright torch against a dark background, easy to detect but not easy to identify what it is. Most sensors in this band are non-imaging heat-seekers detecting and tracking target IRCS.

The 8-14 micron band (long wave) covers room temperatures and detects small differences. Thermal imagers examine target IR signature with high definition pictures. Very hot sources still dominate the 8-14 micron band, but emissions of other parts of a ship are close to the intensity of its hot parts. High contrast of lower temperature areas means that high resolution detectors sensitive to variation of temperature or emissivity allows features to be identified.

As IRCS is mainly used by heat seekers in the 3-5 μm band most techniques aim to reduce radiation from very hot objects, such as a diesel engine exhaust between 230-300°C.

IRCS Contributors

Gas turbine exhaust plumes are the biggest IRCS contributor between 300-500°C at full power. Gases are poor IR radiators, but plumes contain hot carbon particles which radiate near perfectly. Cold air blowers reduce metal uptake temperatures and turbulently mix hot plumes with cool air. However, soot-filled gas can fall back onto a ship and increase corrosion.

Engine exhausts are separated from funnel outer casing, reducing surface temperature, but sunlit reflections from superstructure produce strong long-wave reflections. Exhaust ducts are good high temperature radiators, so most ducts are vertical and only visible to high-flying aircraft or satellites. At low angles, from submarines, ships and most missiles, vertical ducts are nearly invisible. Some auxiliary exhaust ducts are horizontal and screen baffles are placed in front. Embarked helicopters and missile blast screens after firing produce transient emissions which may betray a ship's presence.

As IR emission is a surface problem, coating ships in low emissivity paint reduces IRCS. Emissivity can be up to 0.99 for matt paint. Painted objects behave much like black bodies in the infrared, so low emissivity paint incorporating radar absorbent particles (so RCS doesn't increase as emissivity is reduced) reduces from about 0.92 to 0.15.

The aim is to remove or add contrast edges so ships don't fit recognised patterns. The main identification is from contrast due to differential heating across a ship. Machinery spaces and refrigerated compartments give well-defined hot and cold spots on a hull, reduced by isolating compartments (hull design) or insulation so

they have no external bulkheads. Sprinkler systems may reduce IRCS and blur a ship's IRS, but increases RCS as water droplets produce large radar clutter features, enhance corrosion if used often and are unsuitable for Arctic operations due to icing. In its favour, it renders CO_2 laser rangefinders ineffective by absorption and scattering.

Thermal Contrast and Acoustic Noise

Emitted radiation depends on temperature and surface emissivity. For good imaging, contrast between target and background must be high.

If there is enough contrast between bodies they are separated by the imager. Radiated intensity is given by $\epsilon\sigma T^4$, so for two different objects 1 and 2 to be distinguished $\epsilon_1\sigma T_1^4$ must differ from $\epsilon_2\sigma T_2^4$ by at least the camera sensitivity.

Key noise contributions include: machinery, sensor systems, crew activity, hull motion, propeller noise and aircraft operations. Acoustic signature analysis can give valuable information on vessel activities and identification. Acoustic noise must be minimised in case of acoustic mines and homing torpedoes. Running gas turbine and diesel engines require many mechanical anti-vibration mountings. Moving parts should be minimal and sound insulation included between machinery spaces and the hull.

"MANY RADAR ABSORBENT PLASTICS, CARBON-BASED AND CERAMICS MATERIALS WERE DEVELOPED FOR STEALTH AIRCRAFT; COMBINING SUCH MATERIALS WITH RADAR REDUCING GEOMETRY ON SHIPS WILL ENHANCE STEALTH"

Electric propulsion, insulation in work and living spaces and minimising unnecessary activity all help reduce noise. Aircraft landing and take-off should be conducted swiftly. Sonar emissions must be controlled, hulls should be streamlined to reduce flow noise, lower speed also reduces turbulence. Propeller noise from collapsing cavitation bubbles, blade-rate noise and singing must be avoided. Some systems injects low pressure air into propeller blade tip holes so bubbles collapse slowly reducing acoustic signature, whilst the Visby's water jets eliminate propellers altogether but generate bigger wakes.

Figure 6: Tilted facets on 4.5" gun

Magnetic Stealth

Steel hulled warships are magnetised during construction and as they move through earth's magnetic field. As a magnetised ship moves it affects earth's local magnetic field. Field distortion can trigger magnetically sensitive mines, so to remain stealthy warships must cancel local magnetic fields by degaussing.

To make ships magnetically stealthy permanent and induced magnetic fields are neutralised or reduced to levels which don't trigger mines. Ships use degaussing coils to create an 'offset' induced field in the form of electromagnets embedded in a ship's hull. Warships have several sets of coils to reduce fields in three dimensions.

In addition, silence must be strictly enforced otherwise stealth's benefits are lost. As large signatures are dealt with much smaller signatures may rise to greater significance, a sort of 'peeled onion effect', such as induced marine bioluminescence visible from satellite may become a major detection issue.

Stealth Navies

The Royal Navy's first T45, HMS Daring, was launched February 2006 by BAE Systems at Yarrow's Scotstoun shipyard, representing continued RN stealth development, building upon success with the Type 23 frigate, itself a revolutionary design after the Type 42. Daring's main sections were built at Scotstoun with the bows built in Portsmouth. It is the most powerful destroyer built in the UK and incorporates the PAAMS anti-air defence system.

Visby was built for the Swedish Navy by Kockums and its littoral sea trials took four years. It is the first vessel to use fully developed stealth technology and will hopefully increase its probability of conflict survival. Visby culminates a decade's research starting with HMS Smyge in 1991. The Visby, like the T45, is designed to minimise all signatures: optical and infra red, above water acoustic and hydro-acoustic signature, underwater electrical potential and magnetic signature, pressure signature, RCS and actively emitted signals.

The hull is designed with large flat-angled surfaces, whereas the T45 incorporates a more facetted appearance and uses glass

reinforced epoxy (GRE) suited to naval operations. Visby features are built into its surfaces or concealed under special hatches. Gas turbine exhausts are concealed in hidden outlets close to the stern water surface. Steel is abandoned in favour of composite hull construction, using a PVC core sandwich with carbon fibre laminate. Composites have good strength and durability, low weight and magnetic signature and are relatively cheap.

As of 2007 there are five Visby class ships, from HMS Visby to the most recent HMS Karlstaad. Ship magnetic signature is low; its hull is non-magnetic and uses composites much lighter than conventional steel, increasing speed and endurance over ordinary vessels, making it almost invisible to detection.

Kockums estimates Visby costs 1.5 times conventionally-built corvettes, with low predicted maintenance. Racing yachts and patrol boats have been manufactured from carbon composite materials for years but the Visby is the largest ship to date made from carbon fibre.

India's multi-role destroyer INS Kolkata, launched in 2006, was modified extensively to add stealth with rounded and covered sides and a gas turbine propulsion system, allowing speeds above 30 knots and carries cruise missiles. Russia has also unveiled a St Petersburg built stealth gunboat, the Astrakhan, with stealth capabilities previously only found on larger vessels such as the Kirov; while France's La Fayette class multi-mission frigate is now widely available in Saudi Arabia, Singapore and Taiwan, powered by diesel electric engines, max speed 25 knots and 7000nm range endurance. Germany is also banking upon stealth concepts in future Bremen class frigates to replace its Braunchweig class corvettes, notably in the radar and infrared. China unveiled her first stealth radar-evading warship Yantai in July 1999 and is expected to make a significant contribution to modernise the Chinese navy. With 30% of its equipment newly designed, on a 120-day, 9000-mile sea voyage over 300 faults were rectified. Similar teething problems are likely to be encountered with Daring's sea trials, the first of a Royal Navy fleet of six T45 destroyers.

Electronics Stealth Design

Overall electronic stealth design has become increasingly sophisticated, encompassing many cross-sections and signatures. The ongoing conflict between offensive and defensive capability will continue this trend, requiring the design of further stealthier platforms. The ideal of a warship which cannot be detected is unlikely to be achieved across all energy bands simultaneously, but it is less likely to be detected if signatures are minimised, and increases the probability that decoys and electronic countermeasures will be effective.

To future crews of a Type 45 destroyer (230 at full strength) this should be a comforting thought. ■

Stealth References

http://www.milnet.com/stealth.htm
http://www.bobolinkbooks.com/Camoupedia/DazzleCamouflage.html
http://www.flickr.com/photos/ufopilot/859730496/

connectBlue
Industrial Wi-Fi UART Interface Modules

- Supports 802.11b/g
- No driver required - completely stand-alone
- Radio type approval for Europe, USA and Canada
- Internal or dual external antennas (diversity)
- Industrial temperature range -30 to +85°C
- Ad-hoc and infrastructure modes
- Compatible with connectBlue Bluetooth modules
- Supports security features WEP64, WEP128, WPA-PSK, WPA2-PSK (TKIP/AES)
- Quality of service: 802.11e and WMM
- Integrated web server

nohau
www.nohau.co.uk
Tel 01962 841290
Email sales@nohau.co.uk

2 ISSUES FREE when you subscribe today

Subscribe today to save 16% and receive your CD of articles from 2005

CALL TODAY OR SUBSCRIBE ONLINE

UK:	0870 428 1426
International:	+44 1795 414608
Web:	www.electronicsworld.co.uk

EVER WONDERED WHAT'S INSIDE A "MULTICHANNEL" MODULE?

by Myk Dormer

The ISM radio market still contains a very wide variety of module products, ranging from the very simplest short range, wideband units, right up to high power, long-range radio modems. About half way up the market, in terms of cost and sophistication, the keen observer will have noticed a shift from predominately single channel radios to multi-channel designs. The merits and problems of single versus multiple channel operation have been

"THE MERITS AND PROBLEMS OF SINGLE VERSUS MULTIPLE CHANNEL OPERATION HAVE BEEN DISCUSSED ELSEWHERE, BUT AN ISSUE REMAINS WORTH DISCUSSING"

discussed elsewhere, but an issue remains worth discussing: how does a multiple channel module generate its (programmable) range of operating frequencies?

Basic radio circuit theory points us easily towards the configuration necessary for single channel operation: a sufficiently stable oscillator (using a crystal, surface acoustic wave resonator, or just possibly lumped LC components, depending on the degree of stability required at the operating frequency) is designed to operate on the required transmit (or receiver local oscillator) frequency. Sometimes, when the desired frequency is higher than the chosen oscillator technology can achieve, a sub-multiple of the wanted frequency is chosen and frequency multiplier stages are included, but the basic principle remains the same: a single fixed frequency oscillating element defines the channel frequency.

When a different channel is desired, a new oscillating device is needed. Older multiple channel radios frequently used switched banks of crystals to provide a limited range of channels, but this clumsy technique is rarely seen today. A modern multiple channel design is quite different. The defining 'local' oscillator needs to be capable of moving from one channel frequency to any other, under user control. In most cases this is achieved by using a circuit configuration known as a 'phased lock loop frequency synthesiser'.

The basic PLL is familiar to most engineers: the output of a phase comparator controls the tuning input of a variable frequency oscillator (a VCO) via a low pass "loop filter". One of the phase comparator inputs connects back to the oscillator output, while the other is connected to an external signal source. Provided the tuning range of the VCO is not exceeded, its frequency will be 'locked' to the frequency of the external signal.

The frequency synthesiser adds two important elements to this. The 'external signal' input to the phase comparator is derived from an accurate, fixed, "reference frequency" (Fc), and a programmable frequency divider (a 'divide by N') is placed between the VCO output and the phase comparator. The VCO frequency thus locks to N times Fc.

In the radio application, a second divider (the "R divider") is used to generate the necessary reference frequency from a high stability crystal oscillator, and the local oscillator signal is taken (via suitable buffers) from the VCO output. The reference frequency is set to be the smallest frequency step that the local oscillator will need to be tuned by (usually the channel spacing of the radio).

F(VCO out) = N x F(reference) / R

There is, of course, more involved in a

practical frequency synthesiser implementation. On the one hand, the N divider, R divider, the phase comparator and other ancillary circuitry are usually combined in a single integrated circuit, and in "single chip radio" devices, this synthesiser block is further combined with the VCO (and the rest of the radio's circuitry) to simplify the designer's task even more (at the cost of greatly reduced performance, especially in terms of oscillator noise).

On the other hand, there are many more constraints on the design than I have detailed above. The VCO must be designed for low phase noise (no easy task in itself) while still having sufficient tuning range for the phase comparator output voltage swing, and it must be buffered and isolated from the influence of the remainder of the radio.

Reducing Fc to tune in finer steps increases the settling time of the loop and the inherent phase noise output rises too (as Fc is reduced, N must increase and the loop multiplies any noise on the reference oscillator or dividers by this factor too). If an FM or FSK transmitter is considered, some means must be provided to modulate the output frequency (a subject that deserves an article of its own).

The 'single loop' PLL synthesiser I've briefly described is far from the only configuration possible. There are multiple loop designs, frequently found in signal generators, designs using various fractional divider configurations and hybrid PLL/direct digital synthesisers, to name but a few.

So why is any of this theory relevant to the user of a wireless module? Beyond intellectual curiosity, there are several good reasons:

1. Some modules contain frequency synthesiser circuitry, but no microcontroller. In these cases the control of the synthesiser registers (usually via an SPI or I2C bus) is entirely in the hands of the user. This provides complete flexibility over the radios' operation (provided the operating range limits of the circuitry are not exceeded of course) at the cost of increased control task complexity.

2. Modules which contain their own processor and provide a simpler, more user-friendly interface may still require the user to re-program them if it is desired to operate on any channel other than those in the factory set-up. An understanding of the synthesiser register functions and a basic feel for the operation of the circuit are essential to complete this task. And one day, you may need to design your own. Good luck!

Myk

Myk Dormer is Senior RF Design Engineer at Radiometrix Ltd
www.radiometrix.com

EXAMPLE:

A simple ISM band transmitter operates over 433.9 to 434.65MHz
Channel spacing is 25kHz (30 channels)
A 13MHz TCXO provides the frequency reference.

So:	Fc = 25KHz, R divider will need to be set to 13MHz/25KHz = 520
And:	For output frequencies 433.9 to 434.65MHz: the N divider will be set to values between 17356 and 17386

FOOTNOTE:

Typical frequency synthesiser chips:
http://www.national.com/mpf/LM/LMX2306.html
http://www.fujitsu.com/downloads/MICRO/fme/pll/MB15E03.pdf
Typical multichannel wireless modules:
http://www.radiometrix.co.uk/dsheets/uhx1.pdf
http://www.cdt21.com/products/transceiver/std302/default.asp

ELECTRONICS WORLD

IF YOU ARE INTERESTED IN STAYING AT THE CUTTING-EDGE OF ELECTRONIC DESIGN, ELECTRONICS WORLD IS THE MAGAZING FOR YOU. SIGN UP AND BE INSPIRED EVERY MONTH.

A subscription guarantees your magazine arrives every month promptly and without fail.

SUBSCRIBE NOW! SUBSCRIBE NOW!

Electronics World Subscription
Dovetail Services
800 Guillat Avenue,
Kent Science Park,
Sittingbourne,
Kent, ME9 8GU
Tel: +44 (0) 870 428 1426
Email: saintjohnpatrick@servicehelpline.co.uk

PETER LINDBERG AND ANDREI KAIKKONEN, RF RESEARCH ENGINEERS AT LAIRD TECHNOLOGIES, HERE DISCUSS THE POSSIBILITY OF USING SMALL INTERNAL ANTENNAS IN PORTABLE DEVICES FOR FM RECEPTION AS PERFECTLY VIABLE, AND GIVE DESIGN DETAILS AND MEASURED CHARACTERISTICS OF AN ACTIVE ANTENNA

BUILT-IN ANTENNA FOR FM RADIO RECEPTION AND TRANSMISSION IN MOBILE PHONES

FM radio receiver modules are, since a few years back, a standard feature in most modern mobile phones. Due to the long wavelengths (λ ~3m) and high relative bandwidth in the FM band (76-108MHz, corresponding to a fractional bandwidth of 35%), the hands-free earpiece cord has traditionally been used as the antenna, with the phone chassis (and possibly also the user) as counterpoise, thereby requiring the hands-free to be connected during radio listening. While this solution was acceptable a few years ago, unfortunately this precludes the use of Bluetooth hands-free sets as well as audio speakers for radio. Additionally, FM transmission (Tx) has recently become a popular means of transferring audio short range from a portable MP3 player to the home/car radio, a feature that will be available for mobile phones shortly. It is therefore desirable to separate the antenna functionality from the hands-free cord, preferably integrating the antenna inside the mobile phone instead.

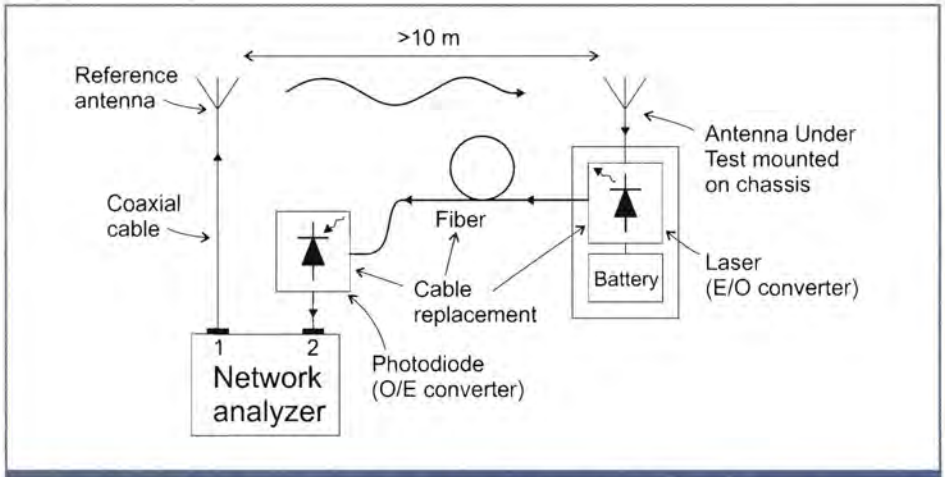

Figure 1: *Cableless measurement setup using fibre-optical system*

Integration Issues

Two problems arise when integrating the antenna inside the phone. First, the amount of available volume is exceptionally limited due to the small size of modern terminals. From laws of physics it is known that this limits the achievable bandwidth to a few tenths of a percent (for the lossless case) – see L. J. Chu, *"Physical limitations of omni-directional antennas"* in the Journal of Applied Physics, vol 19, pp1163-1175, December 1948.

In addition, the chassis PCB typically consists of at least one fully metallised layer (ground plane) with a maximum height over ground available in the 4-8mm range, corresponding to < 0.003λ. Hence, any monopole type of antenna must be highly reduced in length (by capacitive top loading or inductive base loading) to achieve resonance for maximum gain, with a large penalty in bandwidth and antenna efficiency as result.

The achievable radiation resistance is in the order of 1mΩ for reasonable implementations, meaning that the radiation efficiency will be poor and making any attempt at impedance matching to the standard 50Ω interface both hugely difficult but, more importantly, exceedingly lossy, thus further reducing the efficiency. In addition, this low radiation resistance makes accurate characterisation more difficult, as any metal connected to the phone, such as a coaxial measurement cable, will contribute to radiation and thereby lead to a significant overestimation of the antenna gain.

The second problem relates to isolation from transmitting antennas co-located with the FM antenna inside the phone, so called 'blocking'. In particular, the GSM850/900 transmitter presents the

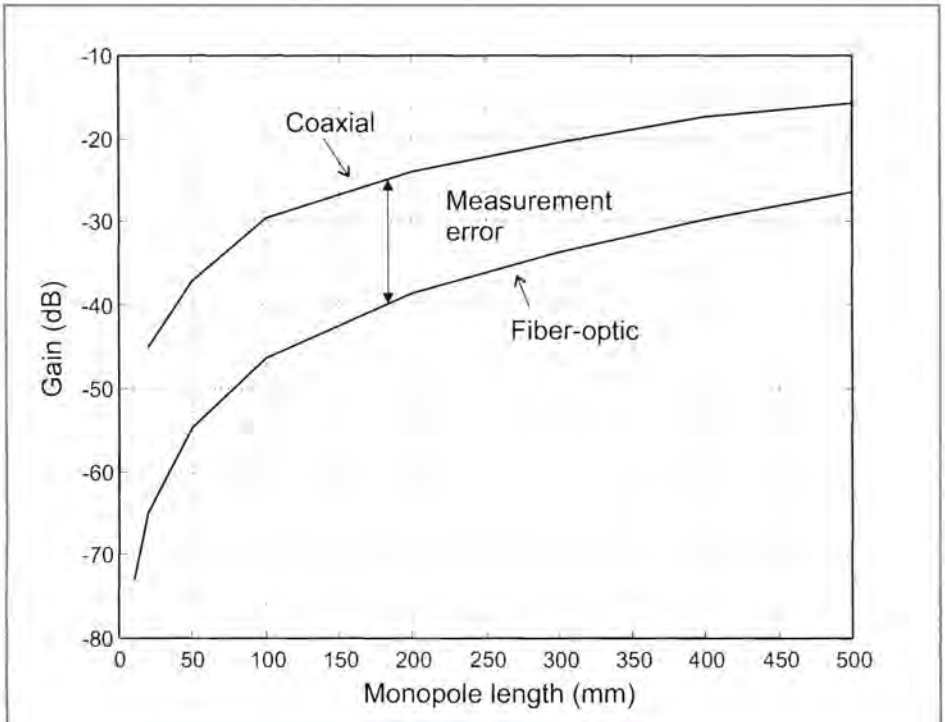

Figure 2: *Measurement error introduced by metallic cable during small antenna measurement*

severest interference due to the closeness in frequency, compared to, say, GSM1800/1900 or UMTS 2.1GHz, and the high maximum output power (2W during 1/8 time slots).

Active Antenna Design Concept

Laird Technologies has developed a built-in antenna concept for FM radio reception, called the RadioAnt, which provides performance similar to that of the earpiece cord by utilising an active concept, i.e. integrating the radiating element with a co-designed pre-amplifier. This approach has several advantages compared to the traditional passive solutions.

The requirement of an antenna impedance of 50Ω is effectively removed, thus avoiding lossy and bandwidth limiting matching components. This is particularly important at FM frequencies where the achievable radiation resistance is around ~1mΩ. Furthermore, in addition to the fundamental issue of loss and bandwidth reduction, the realisation of such a matching network is immense design challenge, as such low impedance levels are very difficult to estimate accurately. For instance, no metallic cables can be connected during measurements as these will then become a significant part of the antenna system. While the intrinsic radiator-amplifier impedance interface is non-50Ω in the active antenna concept, the output can be selected as any impedance level, for example 50Ω single-ended or 200Ω differential etc, for a proper connection to the receiver input.

The gain of the pre-amplifier suppresses the noise contribution of the FM receiver, which typically is about 6dB. This is equivalent to using a passive antenna with 6dB higher gain.

The high gain of the active antenna provides more suitable signal levels to the FM receiver, which is due to the limited dynamic range of the automatic gain control (AGC) of standard receivers. Note that while the higher gain does not improve the signal to noise ratio (SNR) at RF frequencies, as both noise and signal is amplified equally, however it does significantly improve SNR at the down-converted audio frequencies.

The amplifier need not be unconditionally stable, which for a given transistor (with non-zero isolation S12) typically only can be achieved through resistive loading, which would severely reduce the gain and increase the noise of the antenna.

Although the active antenna will provide superior performance to a passive solution, the advantages come at a price. The design and characterisation complexity increases, as described in the following section, the preamplifier consumes power and PCB area and, most importantly, stability and linearity must be achieved without resistive loading, even though the antenna will present a nearly open or short circuit impedance at the amplifier input. In addition, the active element must be protected from ESD without degrading the sensitivity.

Characterisation of Active Antennas

Active antennas are not characterised by the standard antenna parameters gain, efficiency and return loss etc. For instance, the gain can be selected arbitrarily high by simply increasing the gain of the amplifier or cascading another amplifier at the output. Hence, gain by itself is not relevant. Instead, the main figure of merit for active antennas is the total gain (antenna + amplifier) normalised by the total output noise temperature, G/T (see J. J. Lee's *"G/T and noise figure of active array antennas"* in the IEEE Transactions on Antennas and Propagation, vol 41, no 2, pp241–244, February 1993). Now, if we increase the gain of the amplifier, the output noise will also increase and so there is no improvement in terms of G/T.

The G/T for a lossless perfectly matched short dipole or loop antenna (with directivity 1.8dBi) in room temperature is for instance -22.8dB/K (1.8dBi – 10log10(290 K)).

As it is recognised that this concept is unfamiliar to most antenna engineers, we instead present the results in terms of "G/T degradation" relative to a perfectly matched lossless short dipole antenna. This concept is similar to that of "noise figure" in that we compare the SNR at two different nodes (see the *'Calculating Noise'* panel), but without the requirement of a matched source at 290K noise temperature at the input, as is defined for the noise figure metric.

Typically, as most electrically small antennas have a directivity of 1.8dBi, the gain G is more conveniently considered as an "average gain" over all angles, which is identical to the standard antenna efficiency, for example 0dB, or 100%, is maximum. Throughout this article, gain is used synonymously with efficiency and does not include directivity. A G/T degradation of say 10dB thus gives an

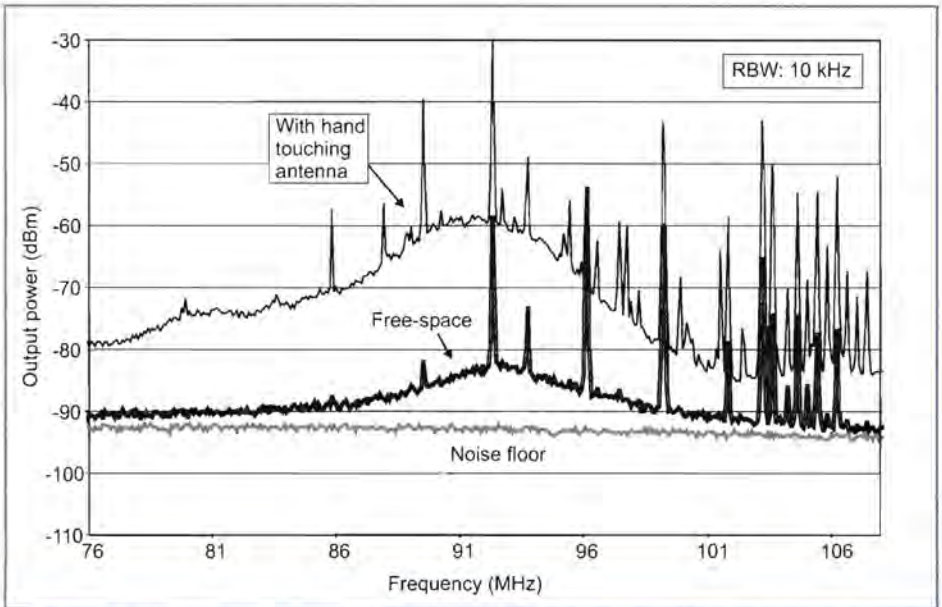

Figure 3: *Measured improvement of gain and SNR due to the human body effect*

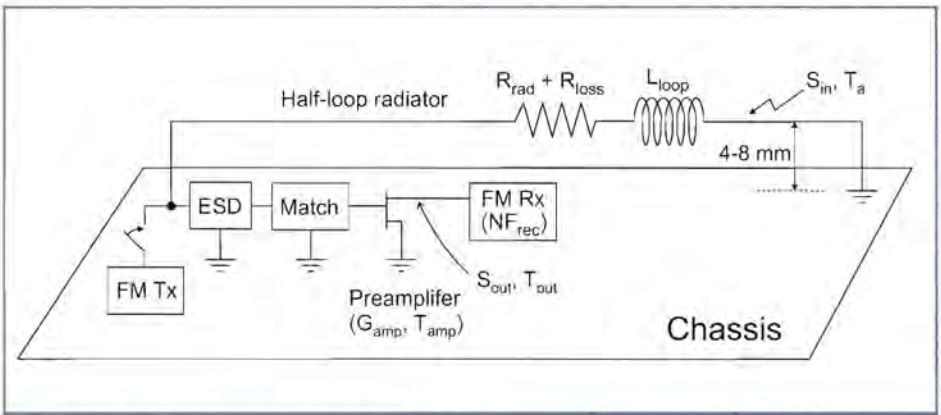

Figure 4: *Schematic layout of the RadioAnt.active antenna using a half-loop radiator*

equivalent system performance as that of a passive antenna with -10dB efficiency (if both antennas are connected to noise-free receivers).

The G/T degradation value in a real application is besides the antenna properties influenced by two external effects: the noise figure of the receiver, which will increase the antennas output noise T_{out} (and reduce the G/T), and the surrounding noise temperature T_a, which will also increase the output noise. This temperature has been shown to be significantly higher than room temperature T_0 (i.e. 290K or -174dBm/Hz) at FM frequencies, mainly due to man-made noise, such as from industrial equipment, consumer products, power transmission etc (see R. J. Achatz and R. A. Dalke's *"Man-made noise power measurements at VHF and UHF frequencies"* in the NTIA Report No. 02-390, Dec. 2001).

The increased noise level means that the effect of the noise contributions from the active devices and resistors is reduced, unless, as in the case of built-in antennas, the gain of the radiating element is so low that the physical temperature of the antenna dominates the noise temperature. Additionally, the high background noise level means that the efficiency requirement of the radiating element can be reduced without a significant reduction of G/T as for the ideal, low-noise case. This can be understood qualitatively by noting that a highly efficient antenna will receive a larger signal level than an antenna with low efficiency, but it will also receive more noise. Hence, the SNR at the antenna output is not significantly better.

The second effect, the noise figure of the receiver NF_{rec} also contributes noise to the antenna output, but can be made insignificant by selecting a sufficiently high gain of the amplifier, i.e. $G_{amp} > NF_{rec}$, thus improving the system performance (in terms of noise floor) compared to using a passive antenna. It should be noted that the two effects – background noise and NF_{rec} – are not in general separable, as for example a high background noise temperature can make the noise figure of the receiver irrelevant and vice versa.

The G/T degradation of an active antenna can be calculated if the efficiency η of the radiator and the gain G_{amp} of the amplifier are known, assuming that the antenna is at room temperature T_0 Kelvin and "sees" an ambient noise temperature of T_a Kelvin, by the following equations.

The SNR at the output of the active antenna compared to at the input ("noise figure") is given by:

$$\left(\frac{S_{in}/T_a}{S_{out}/T_{out}}\right) = \frac{S_{in}(G_{amp}(\eta T_a + (1-\eta)T_0 + T_{amp}) + T_e}{S_{in}\eta G_{amp} T_a}$$

The SNR at the output of the passive lossless (η=1) reference antenna compared to at the input is given by:

$$\left(\frac{S_{in}/T_a}{S_{out}/T_{out}}\right)_{ref} = \frac{S_{in}(\eta T_a + (1-\eta)T_0 + T_e)}{S_{in}\eta T_a} = 1 + \frac{T_e}{T_a}$$

with the G/T degradation being the quotient between **Equations 1** and **2**:

$$(G/T)_{\text{deg radiation}} = \frac{(S_{out}/T_{out})_{ref}}{(S_{out}/T_{out})}$$

In general, however, the efficiency of the radiator and the gain of the amplifier are not known separately, at least not through measurements, simulations or analytical models can be used to obtain such data. Instead, the G/T degradation is obtained directly by measuring the total output noise power of the antenna when placed in a specified environment, such as

T_a=T_0 as in an anechoic chamber, and the gain is measured by e.g. a gain substitution method using reference antenna(s) with known gain.

Care must be taken that noise contributions from the measurement equipment is removed by calibration and that no metallic objects (coaxial measurement cables or voltage supply wires) are attached during these measurements. For this reason, Laird Technologies has developed a cable-replacement system based on fibre-optics, which together with a battery driven preamplifier facilitates proper characterisation of electrically small antennas (see **Figure 1**). An estimation of the measurement error introduced by a coaxial cable is shown in **Figure 2**, where the gain of monopole antennas of different lengths protruding from the chassis has been measured with a coaxial cable and with the fibre-optical system. As can be seen, the measurement error is over 20dB for lengths of ~10mm, which are realistic values for built-in antennas.

Finally, it should be noted that the gain of small antennas at FM frequencies is positively influenced by the presence of the human body, in particular if the antenna or chassis is touched by the user. This is due to the human body being a fairly efficient antenna at around 100MHz, as a half-wavelength is around 1.5m and the human tissue is quite conductive at such low frequencies.

This is in stark contrast to cellular antennas, which can easily lose > 10dB gain in talk-position. The positive human body effect is illustrated in **Figure 3**, where the output spectrum of the receive antenna is shown with and without a user touching the antenna. Clearly, the gain is much higher in the hand-touching case, and it can also be shown that the G/T degradation is improved by 10-15dB in this case.

As most users will be in close vicinity to the mobile phone during listening, it is reasonable to assume that the real-life performance of the FM antenna will be higher than the free-space performance.

RadioAnt Performance

The design of the RadioAnt active antenna concept is shown in **Figure 4**. The radiating element is a single-turn half-loop, where the radiator is grounded at one short-edge of the chassis and connected to the amplifier at the other.

Multiple turns are possible to implement to increase the radiation resistance (see G. Zhou and G. S. Smith's *"The multiturn Half-Loop Antenna"* in the IEEE Transactions on Antennas and Propagation, vol. 42, no. 5, pp. 750-754, May 1994) and the effect is in most cases not sufficient to warrant the extra design complexity. The inductance of the loop is resonated by a shunt capacitance at the amplifier input (gate-source), which besides increasing the gain also provides a better noise match by increasing the real part of the antenna as seen by the amplifier, which also improves the stability.

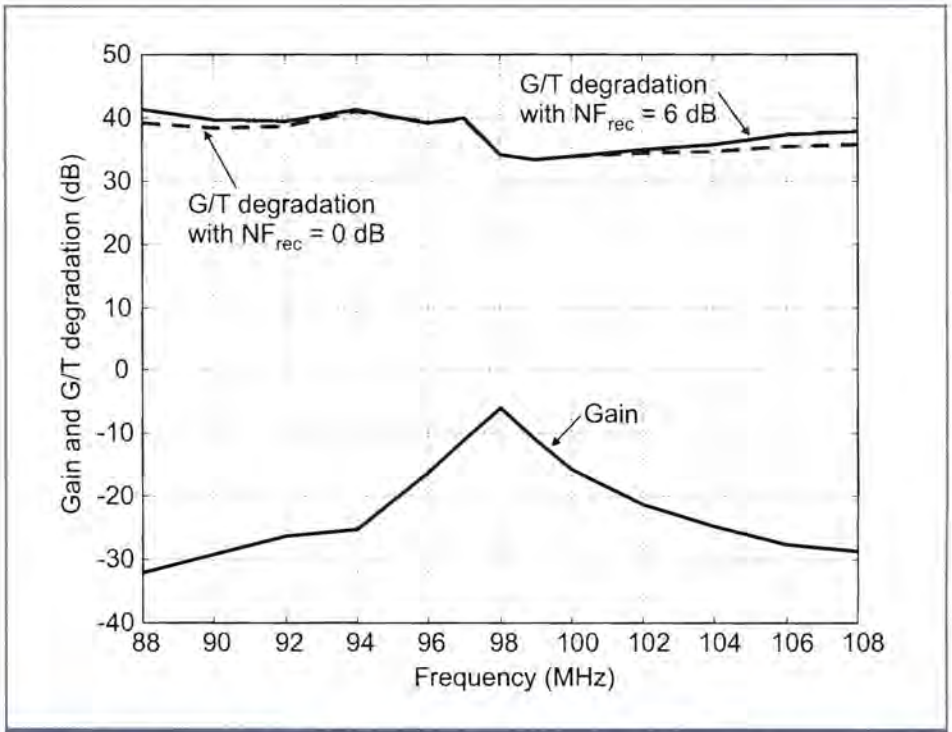

Figure 5: *Measured G/T degradation and gain of the RadioAnt ad-hoc implemented in a Nokia 6125 – only closed position is shown (worst case)*

The amplifier is of common-source topology and utilises a modern microwave FET transistor to minimise the noise contribution. The complete amplifier consumes 3mA at 3V, which gives sufficient gain and linearity for the application. The bias point is stabilised by DC feedback and the noise contribution from the bias network is reduced to nearly zero by design. As the microwave transistor has a positive gain in the tens of GHz range, care must be taken to ensure stability at the source impedance presented by the antenna. Since the amplifier is co-designed with the antenna, the amplifier does not need to be unconditionally stable, as is the case for stand-alone amplifiers. This is a huge benefit of the active antenna concept, as unconditional stability can, in most cases, only be obtained by resistive loading, which would severely reduce the gain and increase the noise of the antenna.

A standard concern is that the antenna impedance is normally not constant but varies depending on its near-field environment. However, in this case, the input impedance of the radiator is only sensitive to magnetic materials (as it is a short loop), which is fairly uncommon in practice. This also means that the antenna is not de-tuned by the influence of nearby objects. Cross-talk from GSM Tx is reduced by the resonant frequency response of the antenna and, also, by proper radiator design.

By short-circuiting the antenna at one short-edge and AC shorting (at GSM frequencies) the antenna at the other short edge by the shunt capacitor (to obtain resonance), the antenna is shorted at the E-field maxima of the GSM antenna, thus ensuring low cross-talk. The sensitivity to GSM crosstalk was measured by placing a reference dipole antenna (824-960MHz and 1710-2170MHz) adjacent to the phone and connecting it to a high power CW transmitter. The onset of signal deterioration was detected at approximately +36dBm at 824MHz (worst case frequency), which is well

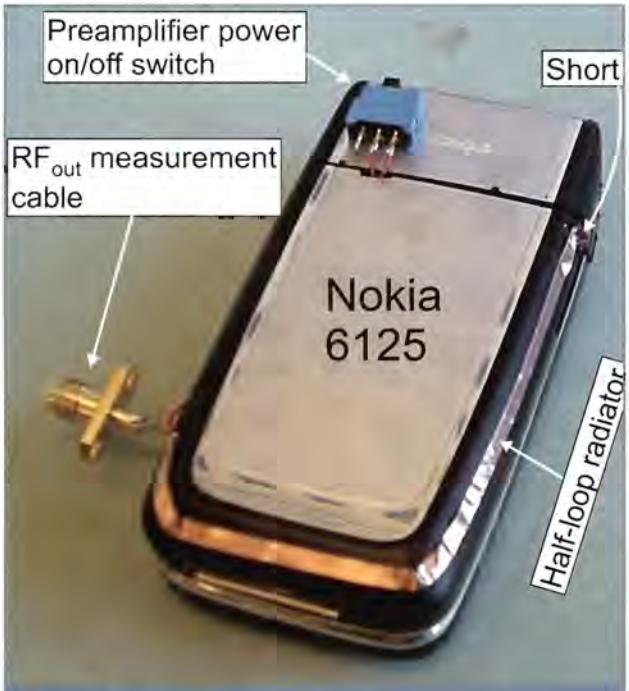

Figure 6: *Photograph of the RadioAnt.active antenna ad-hoc implemented in a Nokia 6125*

above the peak output power of GSM.

The measured G/T degradation and gain of the RadioAnt is shown in **Figure 5** for an implementation in a Nokia 6125 mobile phone shown in **Figure 6**.

This phone can be operated in two modes, open and closed, with somewhat different performance. Typically, the open position is a few dB better than closed position due to the longer chassis length, but it is estimated that closed position will mainly be used in practice by the user during radio listening. Notice that while the gain is highly resonant with an in-band variation of ~20dB, the G/T degradation, which is the important figure of merit from a reception/sound quality point of view, is nearly flat with about 5dB in-band variation. For this reason tunability is not required.

The flatness of G/T compared to the gain is explained by the non-linear function of the amplifier's noise figure to the mismatch level. Hence, an intrinsic radiator-amplifier mismatch of -3dB does not translate into a reduction of SNR at the amplifer output of 3dB. This allows an extra design degree of freedom that can be utilised to improve the G/T-bandwidth of the active antenna, an option that is not available in passive designs.

RadioAnt is designed for frequency tunability (if control signals are available from the FM receiver), which will improve the received SNR level at the band edges by a few dB, in particular if the complete 76-108MHz band must be covered, and also increase tolerance to strong in-band blocking signals. This is, however, an optional feature and is not necessary to obtain good performance.

For transmission, the radiator is used as a standard passive antenna and is connected through a SPST (on/off) switch, see Figure 4. The measured gain of the unmatched half-loop antenna, with the preamplifier for Rx mode still connected, but turned off, and fed from a 50Ω source is shown in **Figure 7**. A wideband average gain, or efficiency, of -53dB to -49dB is achieved, and given that the maximum allowed output power in Europe is 50nW or -43dBm (see ETSI EN 301 357-1 v1.3.1, 2006-05, *"Electromagnetic compatibility and Radio spectrum Matters (ERM); Cordless audio devices in the range of 25MHz to 2000MHz; Part 1: Technical characteristics and test methods"*) the FM Tx power amplifier (PA) must be able to supply around +10dBm and tolerate the induced voltage and current swing at the output. By introducing a matching network between the switch and the FM Tx module, or by suitable choice of PA output impedance, the output power requirement can be significantly relaxed.

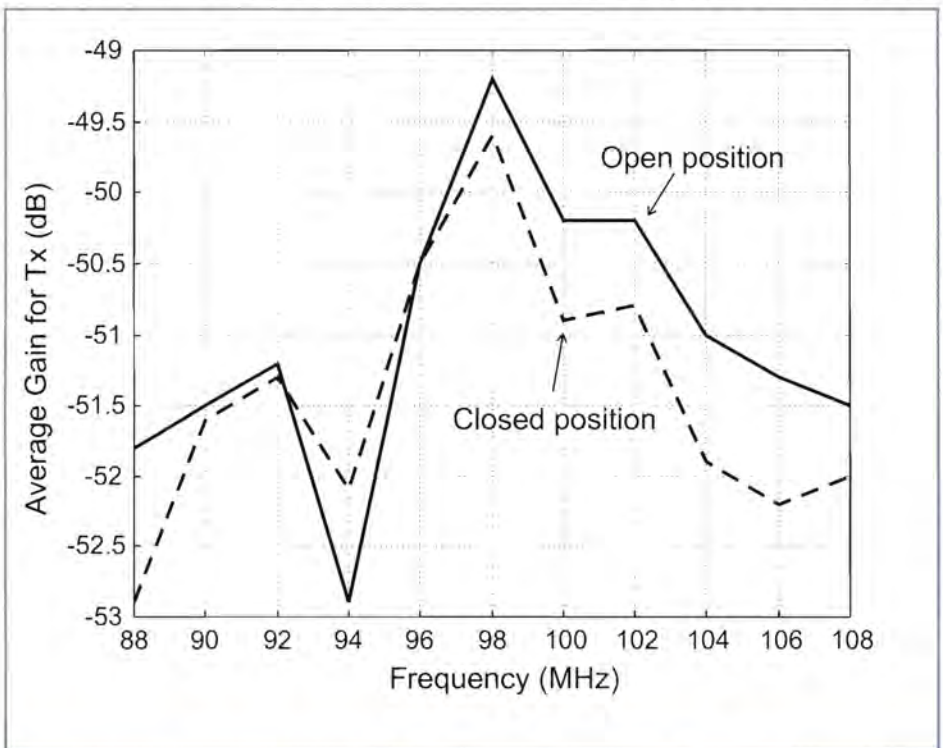

Figure 7: *Measured gain for Tx of half-loop radiator implemented in a Nokia 6125*

Small Antennas Adequate for FM Reception?

It has been experienced in field tests that the RadioAnt performs equally to an earpiece cord based antenna for FM radio reception, despite the huge difference in antenna size. While the active antenna is probably a nearly optimal design given the small volume, the radiation resistance of ~1mΩ in combination with a parasitic loss resistance of at least ~1Ω, for example from the finite conductivity in the radiator metal and interconnect lines, inevitably leads to gains in the range of -30dB to -50dB.

For most RF engineers, it is hard to accept that such low gains can be sufficient for any application involving long-range communication, but there is one factor that greatly relaxes the requirement of gain for FM reception – the high ambient noise temperature. An

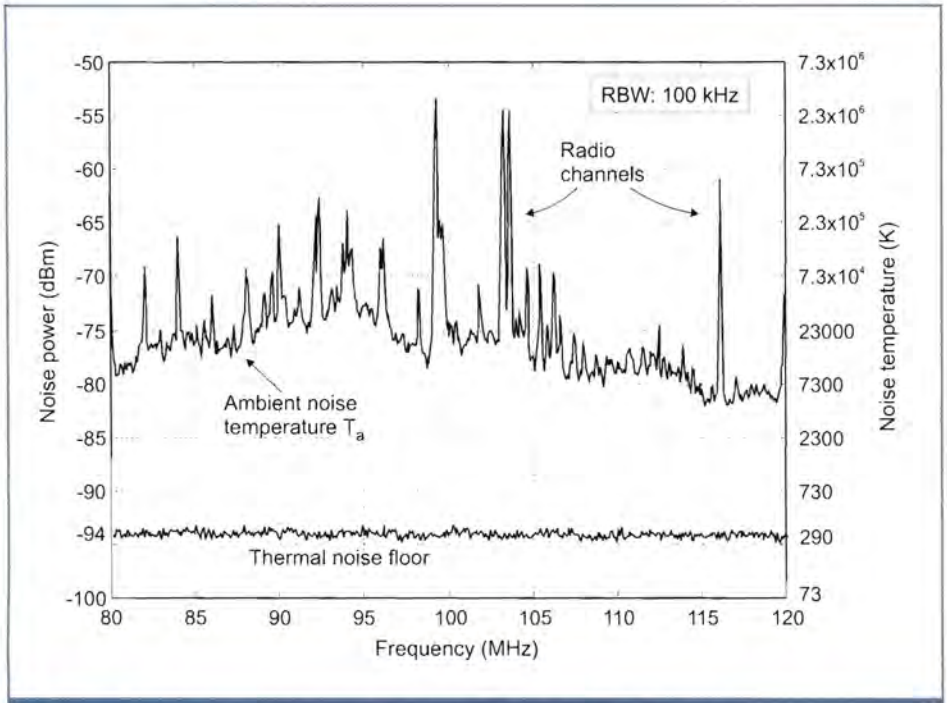

Figure 8: *Measured background noise level in urban environment*

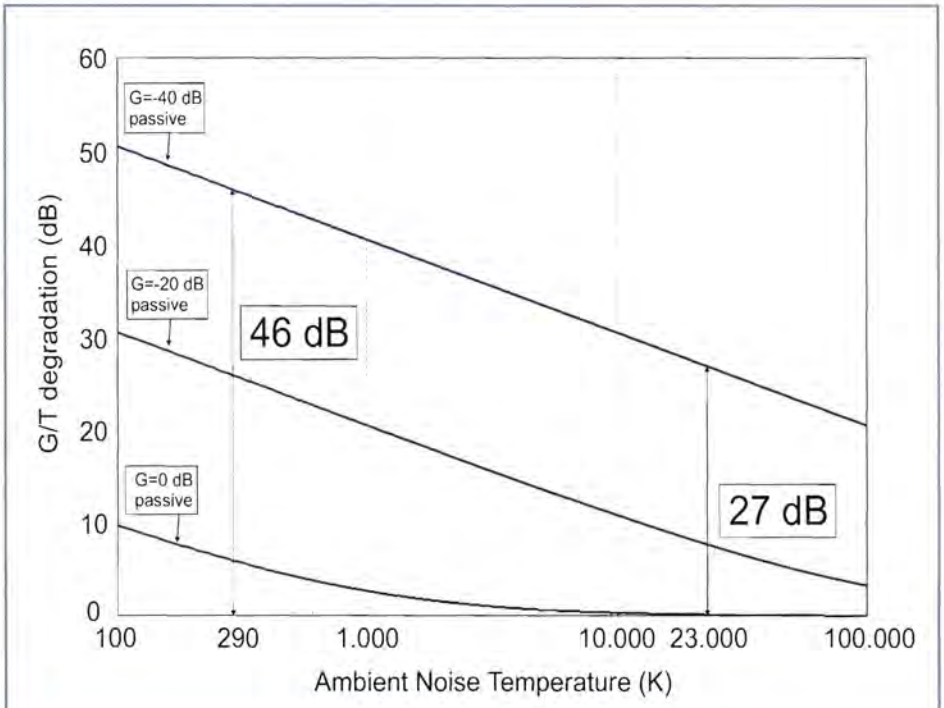

Figure 9: *G/T degradation of passive antennas connected to a receiver with 6dB noise figure at different ambient noise temperatures*

example of this is shown in Figure 6, illustrating the noise level in one of Laird Technologies anechoic chambers (to give a conservative estimate) with parts of the shielding removed.

While most wireless systems operate in the > 1GHz range, where the ambient noise is close to room temperature and a gain of say -10dBi, hence directly translates to a 10dB reduction of SNR; the noise level is about 20dB higher at FM frequencies (and even higher at AM) in most urban areas due to man-made noise (from industrial equipment, electronic consumer products, power transmission lines, etc). Therefore, an antenna with poor efficiency will pick up less signal and less noise compared to a perfect dipole, for example. This is illustrated in Figure 7, where the G/T degradation at different noise temperatures of three antennas with different gains (0dB, -20dB and -40dB) is compared, all antennas connected to a receiver with 6dB noise figure.

For the realistic case of an antenna with -40dB gain (for a G/T reduction of 46dB at room temperature), the same configuration has a 19dB "better" performance at the typical temperature of 23.000K. With an active antenna, a further 6dB can be gained from the suppression of the receiver noise figure. Hence, a poor -40dB gain passive antenna performs "only" 27dB worse than a perfect dipole from an SNR point of view.

Small but Mighty

The possibility of using small internal antennas for FM reception has been shown viable due to the large ambient noise temperature at FM frequencies and positive human body effect. Design details and measured characteristics of the active antenna RadioAnt, developed by Laird Technologies, have been presented. By co-optimising the radiating element with a low-noise preamplifier, a performance similar to that of the earpiece cord antenna has been obtained. The characterisation difficulties of electrically small and active antennas have been discussed, which for instance necessitates the use of fibre-optical, cable-replacement systems. ■

Calculating Noise

Noise figure of an amplifier is calculated as $(SNR_{in})/(SNR_{out})$, i.e. the difference between the SNR at the input of the amplifier compared to the output. G/T degradation is on the other hand calculated as $(SNR_{lossless})/(SNR_{active})$, i.e. the difference between the SNR at the output of the active antenna and at the output of a lossless perfectly matched small dipole. The input referred noise of the receiver should also be included (in both SNR).

POWERING LED ARRAYS IN BACKLIGHT APPLICATIONS

DAVID SORLIEN, APPLICATIONS ENGINEER IN INTERSIL'S CONSUMER POWER PRODUCTS GROUP BASED IN SAN DIEGO DISCLOSES AN OP-AMP WHICH CAN POWER MORE THAN EIGHT LEDs AND WHICH, WHEN USED IN CONJUNCTION WITH A LIGHT-TO-CURRENT SENSOR, CAN EASILY IMPLEMENT APPLICATIONS THAT REQUIRE A CONSTANT LIGHT OUTPUT

LEDs are becoming an increasingly popular backlighting option for all types of LCDs, large and small, as more efficient and more cost-effective white LEDs become available on the market. Advantages of LED backlighting include low cost, high reliability, low voltage, low EMI, high immunity to vibration, wide operating temperature range and wide dimming range. These features make LED backlighting particularly suitable for handheld applications, such as cellular phones, portable media players, digital still and video cameras, and GPS receivers among others.

An LED backlight has two basic configurations: edge-lit or array-lit. Edge-lit displays use one or many side-emitting LEDs along the sides of the display. Array-lit displays employ multiple LEDs arranged in a grid pattern directly behind the display. In both configurations, the LED light source is coupled with light guides and diffusers that distribute the light evenly behind the display.

Intersil's EL7801 is a high-power LED backlight driver with integrated 36V FET, capable of driving one to eight high-power LEDs in a series from a wide range of input voltages. The 1MHz PWM converter can be configured in boost or buck topologies, supporting a wide variety of LED backlight applications.

LED light level may be controlled by adjusting the DC bias via the LEVEL pin, or by applying an external PWM signal to the EN/PWM pin. Since LED colour temperature varies with bias current, PWM dimming offers better control of colour temperature because current through the LEDs is kept constant. The EL7801 provides a 5V gate driver synchronised to the EN/PWM pin that can be used to control an external FET that disconnects the LED stack during the PWM dimming signal-off period. A voltage applied to the LEVEL pin then sets the output current of the converter during the PWM on period.

A minimal BOM LED backlight application using an EL7801 in boost configuration to drive a string of eight series-connected LEDs is shown in **Figure 1**.

Eight Series-Connected LEDs

In this application, eight series-connected LEDs are driven from a 12V supply. A logic-level PWM dimming signal is applied to the EN/PWM input to control average LED current. Current in the LED load during the PWM on-time is determined by the value of the feedback sense resistor R3, and the target feedback regulation voltage (V_{FB}). With MODE tied to VDC, voltage across the feedback resistor is set by V_{LEVEL}.

$I_{LED} = V_{FB}/R_{SENSE}$

$V_{FB} = V_{LEVEL}/5$

The value of VFB should be kept in the 50mV to 450mV range for linear

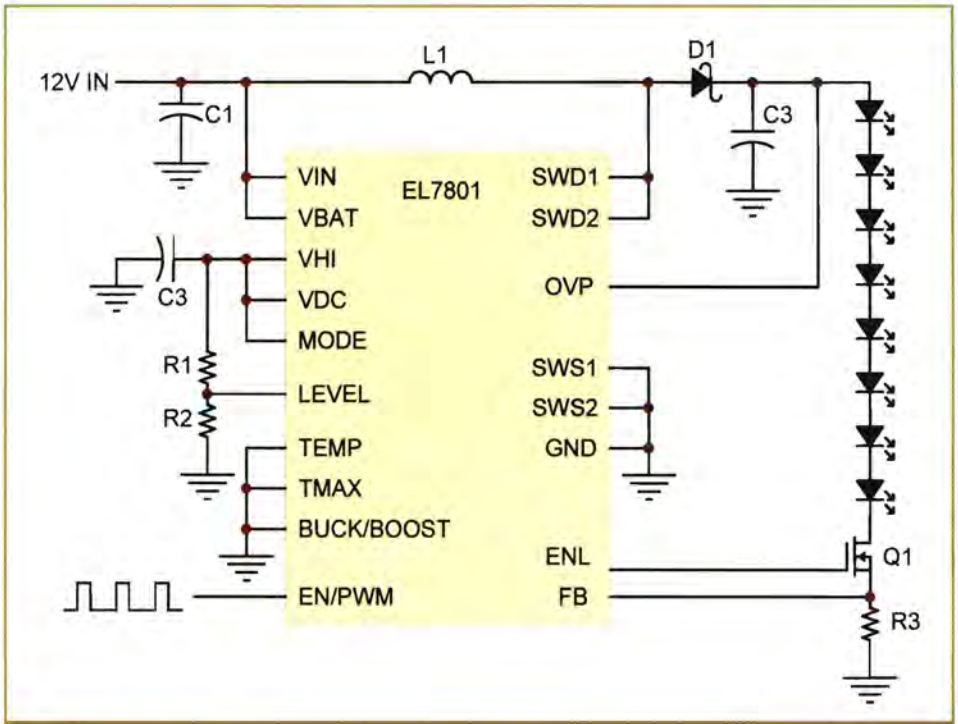

Figure 1: *Typical EL7801 circuit*

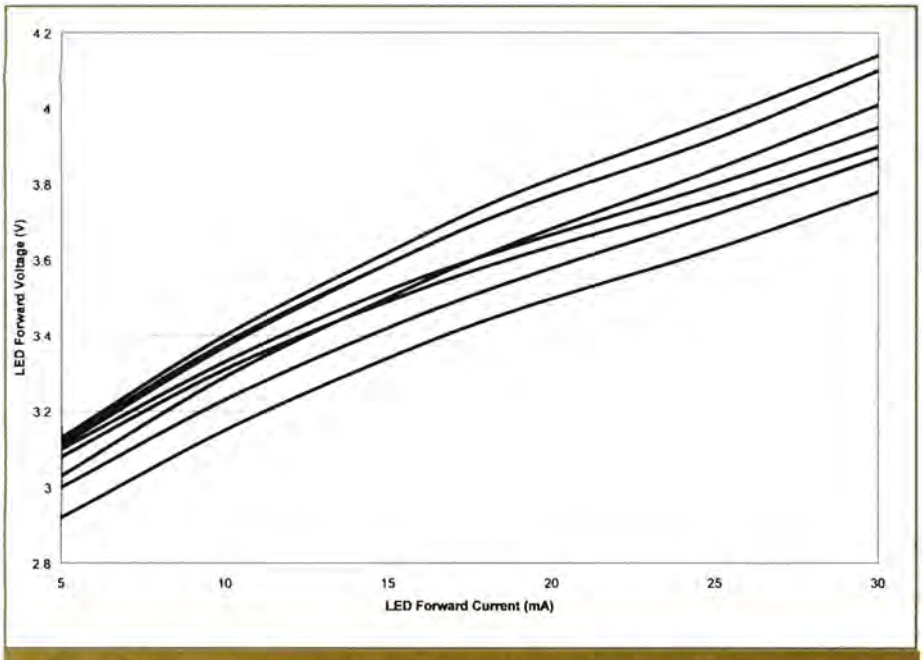

***Figure 2:** Forward voltage vs forward current for eight white LEDs from same reel*

operation. With MODE pin tied to ground, V_{FB} is set to 400mV via an internal reference, and resistors R1 and R2 can be omitted.

For applications that require more than eight series-connected LEDs, multiple strings of series-connected LEDs can be controlled using a single EL7801 device. If one simply connects the LED strings in parallel, there can be noticeable mismatch in brightness between the strings, due to variations in LED forward voltage. To illustrate this concept, the forward voltage versus forward current variation of eight white LEDs taken from the same reel is shown in **Figure 2**.

In this example, LED current at a specific forward voltage can differ by as much as 10mA. When two such LEDs are connected in parallel and driven by a constant current source, the variability of the individual LED forward voltage will likely result in one LED receiving significantly more current than the other.

An additional source of LED forward voltage versus forward current mismatch is introduced by temperature variations between the individual LEDs. White LEDs of the type used in backlight applications typically have a temperature coefficient of -2mV/°K to -4mV/°K. Thus, as temperature increases, the forward voltage decreases. This effect will contribute to the current mismatch between LEDs or LED strings connected in parallel.

A better method of driving multiple LED strings from a single LED driver IC is required. One solution to provide equal current to two LED strings involves the use of a simple current mirror, constructed with a matched transistor pair. Such an application is shown in **Figure 3**.

Controlling Average LED Current

In this application, Q1-Q2 is a matched pair of transistors. It is important to keep Q1 and Q2 at the same temperature to provide good current matching in each LED string. Devices that include two or more thermally-coupled matched transistors in a single package are available for this purpose.

A logic-level PWM dimming signal is applied to the EN/PWM input to control average LED current. Total current in the LED strings during the PWM on-time is controlled by the value of R4 and the target feedback voltage (V_{FB}), which is controlled by applying a DC voltage at LEVEL.

The value of R3 must be carefully selected to guarantee that under all operating conditions, the voltage between points A and C in this circuit is greater or equal to the voltage between points B and C. If this relationship is not maintained, the LED strings will receive unequal current.

To calculate the required value at R3, the maximum (V_{f_MAX}) and minimum (V_{f_MIN}) forward voltage of the LEDs must first be determined. It is important to

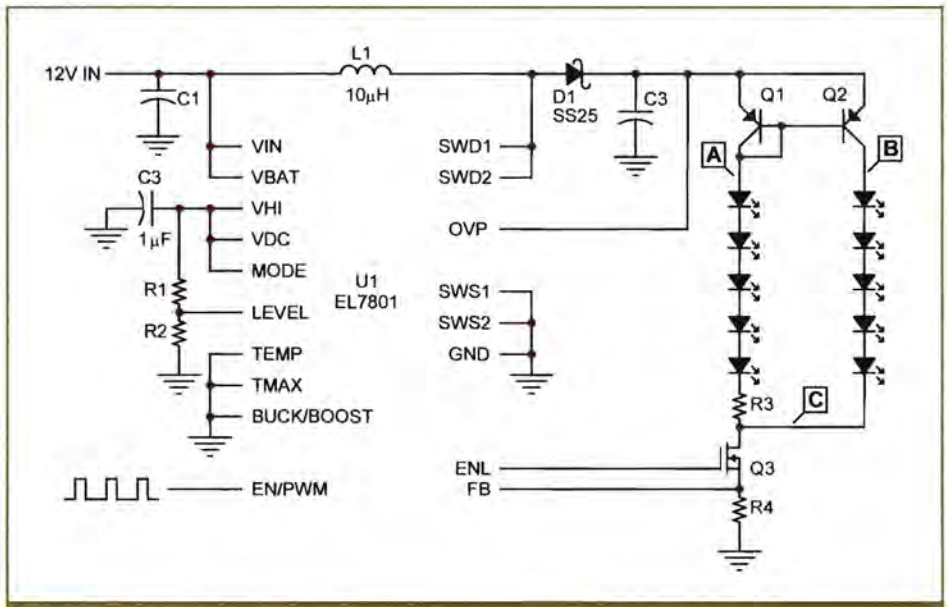

***Figure 3:** Multi-leg EL7801 circuit with simple current mirror*

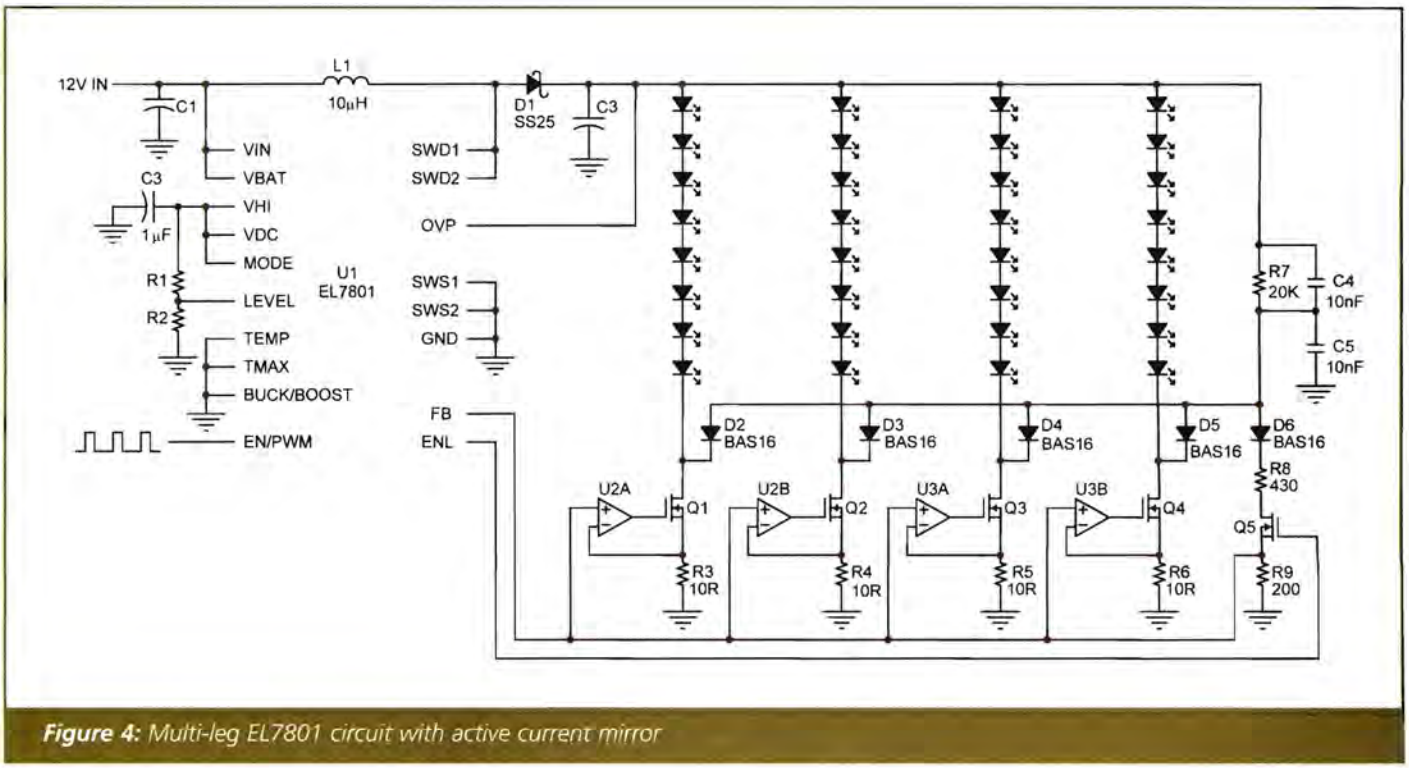

Figure 4: *Multi-leg EL7801 circuit with active current mirror*

consider all sources of forward voltage variation, as described in the sections above. The worst-case voltage difference between the two LED strings (ΔV_{f_string}) is then calculated:

$$\Delta V_{f\_string} = (\#\text{ of LEDs in string}) \cdot (V_{f\_MAX} - V_{f\_MIN})$$

The minimum current in either LED string is then determined. This is nominally one-half of the total output current, set by R4 and V_{FB}. The accuracy of the current mirror circuit at Q1-Q2 should be considered, as well as the gain and offset error in the EL7801 internal circuitry that translates the voltage on LEVEL to the target feedback voltage V_{FB}. When minimum LED current is known, the ideal value of R3 can be determined:

$$R3 = \Delta V_{f\_string} / I_{LED\_MIN}$$

It is important to not violate the absolute maximum power rating of the components, therefore R3, Q1 and Q2 must be selected to handle the worst-case conditions, and PCB layout must be done with thermal considerations in mind.

The application circuit depicted in Figure 3 has a few drawbacks. The circuit is rather inefficient, since worst-case LED forward voltage variations must be accommodated. Furthermore, driving additional LED strings while maintaining tight string-to-string current matching may be difficult due to the unavailability of suitable matched transistor arrays. For such applications, a better solution is required.

A more efficient backlight application using the EL7801 to drive four strings of eight series-connected LEDs is shown in **Figure 4**.

Driving 32 LEDs

In this application, a total of 32 LEDs are driven from a 12V supply. Similar to the application depicted in Figure 1 above, LED brightness is controlled by applying a logic-level PWM signal on the EN/PWM input. The LED current during the PWM on

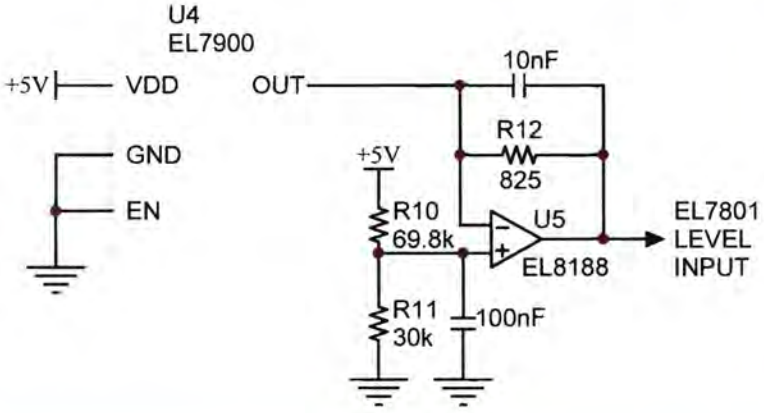

Figure 5: *Controlling LED current using an EL7900 light senor IC*

time is controlled by the voltage at LEVEL.

U2 and U3 are single supply dual op-amps, configured as voltage-controlled current sinks. Examining the leftmost leg, we see that current flowing through the LED string also flows through Q1 and R3. The op-amp will adjust the gate drive of Q1 to force the voltage across R3 to equal V_{FB}. LED current during the PWM on time is determined by the voltage on the LEVEL pin:

$$I_{LED} = V_{LEVEL} / (5 \cdot R3)$$

With the 10Ω current sense resistors shown in Figure 4, a voltage of 1V applied to LEVEL will result in 20mA current per LED leg. LED current can be increased by reducing the value of the current sense resistors, or by increasing V_{LEVEL}.

The op-amps selected for this application must be able to function with input voltages near ground. The op-amps will typically be single-supply type, powered from the EL7801 VDC output, therefore a rail-to-rail op-amp is suggested (for instance, Intersil EL5220CY). With this circuit, leg-to-leg current matching is primarily a function of the op-amp input offset error, so an op-amp with a low V_{OS} specification is preferred. The op-amp output slew rate is also an important consideration to maximise system efficiency and dimming linearity, and becomes increasingly important as the frequency of the PWM dimming signal increases.

Diodes D2 though D5 identify the LED string that exhibits the greatest combined forward voltage drop. The voltage at the bottom of this LED string also appears at the cathode of D6. During the PWM dimming signal on-time, ENL is driven to 5V, turning Q5 on. The control loop of the EL7801 will then increase switching duty cycle until the V_{FB} reaches the desired voltage level. At this time, the voltage across R8 becomes equal to the minimum drain-source voltage of the four current sink MOSFETS (Q1 through Q4). Therefore, the value of resistor R8 determines the minimum voltage that will appear across any of the current sink MOSFETs.

Increasing Efficiency

To increase efficiency of the system, the value of R8 can be reduced. However, the ratio of R8 to R9 must be greater than the ratio of the current sink MOSFET $R_{DS(ON)}$ to the current sense resistors (10Ω in this example), in order for the circuit to generate equal current in each LED string.

Since the voltage across each of the 10Ω resistors at R3-R6 is equal to the FB voltage, the legs that exhibit a lower combined LED forward voltage drop will see an increased drain-source voltage at the current sink MOSFETs. The designer should consider the LED forward voltage tolerance across the operating temperature and desired LED current ranges, and select current sink MOSFETs capable of handling the worst-case power dissipation condition.

During the PWM off time, the ENL signal is driven low, turning off Q5. Voltage across R9 then becomes zero. The voltage controlled current sink circuits respond in turn by driving the gate of the connected MOSFETs low, disabling the current flow through the LEDs.

Capacitors C4 and C5 allow some of the output voltage ripple to appear at the FB circuit node and help stabilise the EL7801 control loop. The EL7801 employs a direct summing control loop with current feedback. No error amplifier is used in the system. This arrangement provides fast transient response and makes use of the output capacitor to close the loop. A combination of ceramic and low-ESR electrolytic capacitors can be used to minimise implementation costs. Generally, the higher numbers of LEDs, lower V_{FB} voltages and smaller values of current sense resistors will require smaller value output capacitors to achieve loop stability. In the circuit depicted above, with 20mA LED current per leg, a total of 40μF of capacitance at C3 is recommended.

It may be desirable to sense the actual light output of the LEDs and adjust the LED current to maintain a precise level of luminous intensity. A method of controlling LED current with a light sensor IC is shown in **Figure 5**.

The circuit shown in Figure 5 can replace the fixed voltage divider on LEVEL depicted in Figure 4, to provide a method of maintaining a constant light output. The EL7900 is a light-to-current optical sensor combining a photodiode and current amplifier on a single monolithic IC. Output current is directly proportional to the light intensity on the photodiode:

$$EL7900\_I_{OUT} = E_V \cdot (60\mu A / 100Lux)$$

Where E_V is illuminance in Lux

The op-amp at U5 is configured as a current-to-voltage converter. The voltage divider formed by resistors R10 and R11 sets the output voltage when no light is present at the EL7900 sensor. With the values of R10 and R11 shown, the output of U5 is 1.5V when there is no light present. Resistor R12 is selected to provide the desired gain of the system.

$$V_{OUT} = V_{REF} - (E_V \cdot R12 \cdot (60\mu A / 100Lux))$$

Where V_{REF} is the voltage at U5's non-inverting input

The component values shown in Figure 3 were selected to provide a 1.0V output at 1000 Lux light input. When light intensity increases, the output voltage of this light-sensing circuit decreases and the attached EL7801 circuit will respond by decreasing the switching duty cycle, thus reducing LED current. ■

EV (illuminance, in Lux)	VOUT
0	1.500
100	1.451
200	1.401
500	1.253
1000	1.005
2000	0.510
3000	0.015

Luminance versus output voltage

EVEN THOUGH AS A READER OF THIS MAGAZINE YOU PROBABLY HAVE A FIRM GRASP OF THE CONCEPTS OF PHASE AND PHASE DELAY, THERE MAY STILL BE SOME EXTRA FACETS WHICH HAVE NOT DRAWN YOUR ATTENTION YET. THIS ARTICLE MIGHT SHED A NEW LIGHT ON THEM
BY HUGO COOLENS

A CLOSER LOOK AT PHASE DELAY

It's a well known property of a linear circuit that when a sinusoidal voltage (or current) is applied to it, all voltages and currents in the circuit will also be sinusoidal once the circuit has attained steady state conditions. Let us consider as an example such a linear circuit – the trivial low pass filter in **Figure 1.**

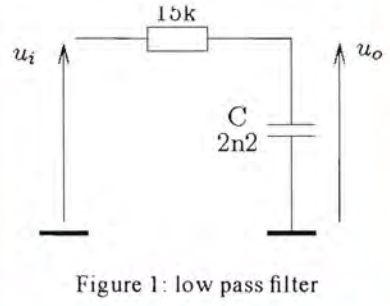

Figure 1: low pass filter

Figure 1: *Low pass filter*

If $u_i(t) = A_I \cos(\omega t)$ then $u_o(t)$ can be written as $A_O \cos(\omega t + \varphi)$ in which φ is called the (relative) phase. An alternative expression is $u_o(t) = A_O \cos[\omega(t - t_d)]$, t_d in the latter expression is called the phase delay. As both expressions for $u_o(t)$ are equivalent, the connection between relative phase and phase delay is given by:

$$\varphi = -\omega t_d \qquad (\forall \omega \in]0,\infty[)$$

Notice the bracketed expression in Equation 1, this may seem nitpicking at first sight but it is not. If we would allow ω to become actually zero or infinity our definition of t_d would no longer make sense as both $u_o(t)$ and $u_i(t)$ always have to stay sinusoidal voltages.

If you are rather a "hands on" type of person and you actually want to measure t_d with your dual channel oscilloscope you will probably think of it as the time between two corresponding successive zero crossings of $u_o(t)$ and $u_i(t)$ as shown in **Figure 2**. You could of course also measure between two successive maxima but measuring between zero crossings is usually easier and more precise.

Now that all the main actors of our play are clearly present let us play a little mind game. Consider for yourself the following statements without reading further and mark them as either true or false:

1. Two signals are in phase when their relative phase equals zero
   - ❑ true
   - ❑ false

2. Two signals are in phase when the phase delay between them equals zero
   - ❑ true
   - ❑ false

Let us look at our low pass filter once again. Its phase response is given by:

$$\varphi = -\arctan(\omega RC)$$

If you lower the input frequency, the relative phase can get as near to zero as you wish i.e. you can get both signals as close to "being in phase" as you want. What about the phase delay? Can we get that also as close to zero as we want by lowering ω? To find that out let us calculate the phase delay by combining Formula 1 with Formula 2:

$$t_d = \frac{\arctan(\omega RC)}{\omega}$$

When we lower ω then both the numerator and the denominator of the right side of **Equation 3** decrease. To see

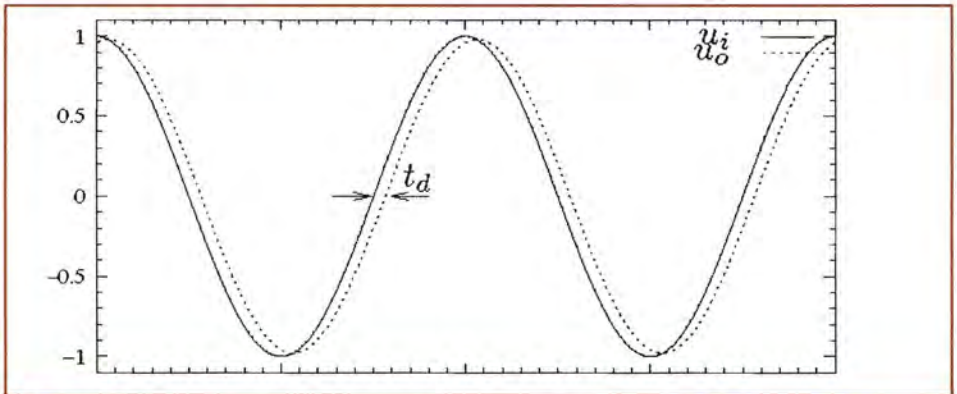

Figure 2: *Measuring phase delay for Figure 1*

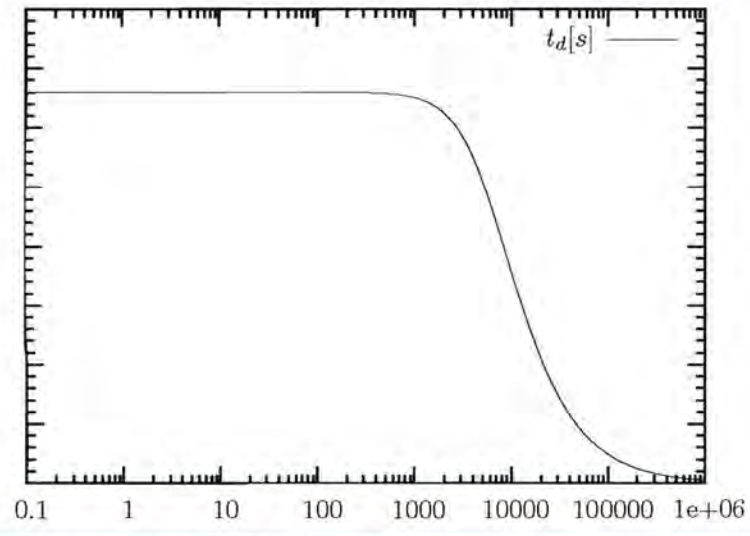

Figure 3: *Phase delay diagram for Figure 1*

which value their ratio is getting at, let us use de L'Hopital's Rule:

$$\lim_{\omega \to 0} \frac{\arctan(\omega RC)}{\omega} = \lim_{\omega \to 0} \frac{\frac{RC}{1+(\omega RC)^2}}{1} = RC$$

Equation 4 shows that by lowering ω we cannot get t_d as close to zero as we want as RC acts as a lower limit for this filter. So, if you answered both statements were true in our little quiz above you fell in the trap I carefully set up for you. I have confronted quite a few people involved in electronics with this quiz and I can tell you more than 50% thought both statements were equivalent. Of course I would not have written this article if all this had not looked paradoxical to me at first sight too.

Why are so many people thinking like this? I think there are a few plausible explanations. First of all we are not as much used to the concept of phase delay as we might think. When people are studying linear electronic circuits most attention goes to the amplitude characteristics and to a lesser extent to phase characteristics because most of the time these are all you need to design and understand them. Phase delay as such is seldom studied. Have you ever seen a phase delay diagram? I guess not, I have drawn the phase delay diagram of our example low pass filter in **Figure 3**, it may look at first sight a bit like the corresponding phase diagram but its shape is in reality not simular to it. Notice it is not symmetrical with respect to its inflection point as is the case for the corresponding phase diagram. Its inflection point is also not situated at $\frac{1}{2\pi RC}$.

When it comes to measurement practice it is common to put the time base out of calibration for measuring relative phase directly by making e.g. 9 horizontal divisions equal to 180° thus making a calculation of φ via t_d unnecessary.

Another explanation finds its origins in **Equation 1** which misleadingly might suggest a linear relationship similar to $y = a \cdot x$,this of course is not true as t_d itself is also a function of ω. A plot of $t_d(\omega)$ as a function of $\varphi(\omega)$ for our low pass filter is shown in **Figure 4**.

A final explanation for the confusion is our failing perception when seeing signals on an oscilloscope. When you display u_i and u_o both on a scope screen for low frequencies, the phase delay may become unnoticeable on that scale of your time base, giving you the false impression that it equals zero.

This does not conclude our story yet. A few extra questions may come to mind. Is it true the time between two corresponding consecutive zero crossings of u_o and u_i for our low pass filter can never become lower than RC? No, it is not, if we increase ω, t_d can become as close to zero as we want, this corresponds to φ aiming at $\pi/2$.

This may also come as a surprise when you first realise it. You can see this happen in the lower left corner of Figure 4 which could be called a phase phase delay diagram. You may also wonder now whether all low pass filters behave like this i.e. does t_d never go to zero for all of them when $\omega \to 0$? Look for instance at the filter in **Figure 5** for which a phase phase delay diagram is shown in **Figure 6**. For this filter both φ and t_d go to zero as $\omega \to 0$. This shows that the second statement of our quiz is not universally false.

As a final remark, notice that the low pass filter of Figure 1 can come in handy to generate a fixed delay for a signal as long as its frequency content is not too high. The low pass filter thus acts as a replacement of a unidirectional delay line. If you want e.g. a delay of RC seconds within a margin of error of 1% our low pass filter will fulfill its job as long as signal frequencies are ≤843Hz,if a margin of error of 10% is good enough, the

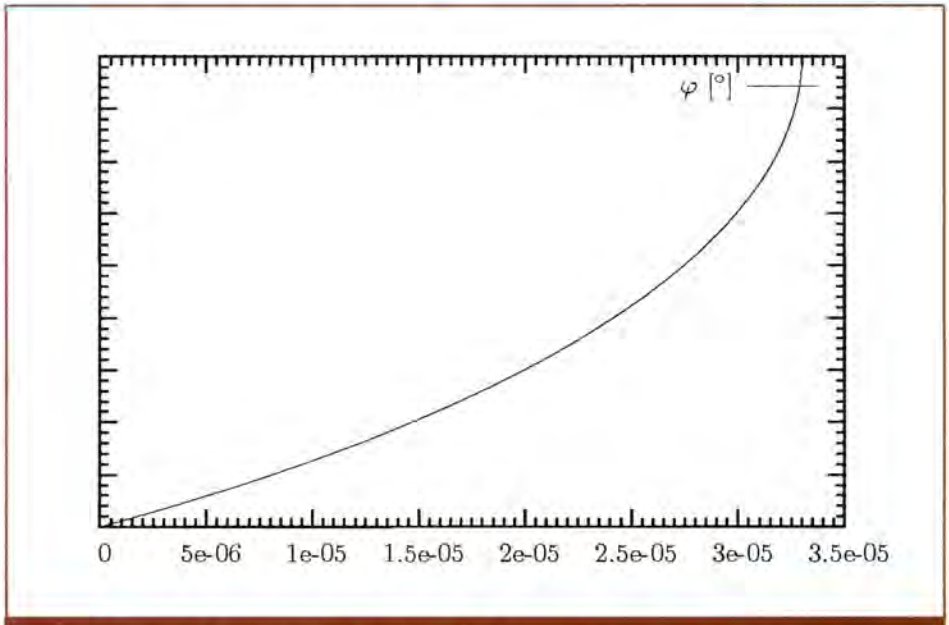

Figure 4: *φ as a function of phase delay for figure 1*

frequency limit equals 2906Hz as can be derived from Figure 3. In the first case the delayed signal will not be attenuated more than 0.13dB, in the second case the attenuation is kept below 1.35dB.

I hope this article shows that there is more to say about relative phase and phase delay than most electronics books usually do and that a tendency which holds for one of them not necessarily is also true for the other. ■

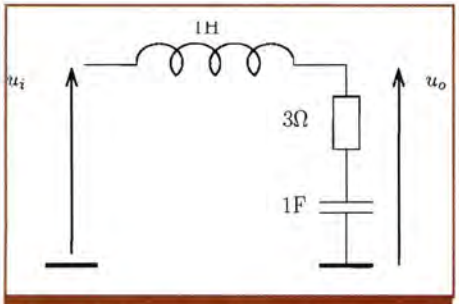

Figure 5: *Low pass for which both φ and t_d go to zero when $\omega \rightarrow 0$*

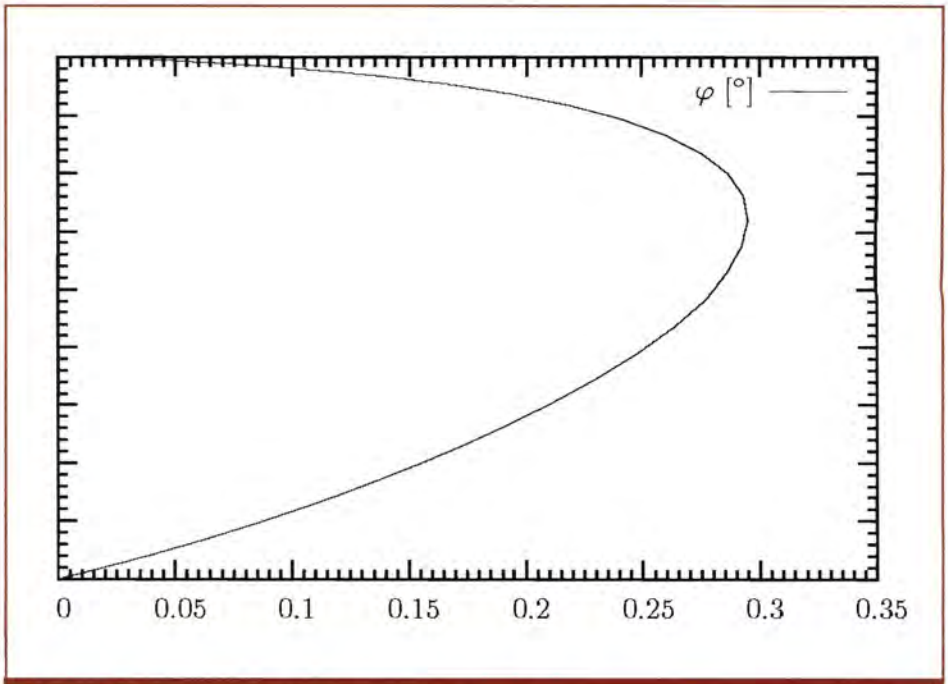

Figure 6: *Phase phase delay diagram for Figure 5*

VIBRATION MONITORING YOU CAN RELY ON

MONITRAN ACCELEROMETERS - TRUSTED TO PROTECT PLANT AND MACHINERY THE WORLD OVER

Monitran have been making rugged, reliable and versatile accelerometers for 21 years. No wonder they are acknowledged as one of the leading authorities on vibration monitoring worldwide.

To see our recently expanded range of products and learn how Monitran accelerometers can benefit your business, visit www.monitran.com or call us on +44 (0)1494 816569.

MONITRAN
SENSING THE FUTURE

T. +44 (0)1494 816569
F. +44 (0)1494 812256
E. info@monitran.com
W. www.monitran.com

KESTREL ELECTRONIC COMPONENTS LTD
7 GAVERCOOMBE PARK
TINTAGEL CORNWALL PL34 0DS
TEL 01840-770028 FAX 01840-770705
www.kestrel-electronics.co.uk

100 + PRICES (many other items available)

MAX232CPE+	0.42	PIC16F876A-I/SP	2.09
PIC12C508A-04P	0.39	PIC18F877A-I/P	2.11
PIC12C509A-04P	0.44	PIC16F914-I/PT	1.16
PIC12F629-IP	0.39	PIC18F252-I/SP	2.55
PIC12C671-04P	0.73	PIC18F458-I/PT	3.19
PIC12F675-IP	0.47	PIC18F4520-I/PT	2.72
PIC16C54C-04P	0.62	PIC18F4580-I/P	3.21
PIC16C55A-04P	0.78	PIC18F4525-I/P	3.11
PIC16C57C-04P	0.88	PIC18F4680-I/P	3.35
PIC16C65B-20P	1.95	PIC18F6520-I/PT	3.05
PIC16F73-ISP	1.55	PIC18F6585-I/PT	3.84
PIC16C74B-04P	2.59	PIC18F6620-I/PT	4.39
PIC16F74-IP	1.77	PIC18F6621-I/PT	3.72
PIC16F76-I/SP	1.78	PIC18F6622-I/PT	3.09
PIC16F77-IP	1.91	PIC18F6627-I/PT	3.59
PIC16F84A-04P	1.55	PIC18F6720-I/PT	4.96
PIC16F628A-I/P	0.81	PIC18F6722-I/PT	4.05
PIC16F818-I/P	0.83	PIC18F8585-I/PT	3.92
PIC16F870-I/SP	0.99	PIC18F8680-I/PT	3.99
PIC16F873A-I/SP	1.68	PIC18F8720-IPT	4.98
PIC16F876A-I/SO	1.85	PIC18F8722-IPT	4.05

We can also supply Maxim/Dallas,Analogue Devices,
SEE OR WEBSITE FOR SPECIAL OFFERS

KEEPING THE LID ON NON-SOLID SMD ELECTROLYTIC CAPACITORS DURING A LEAD-FREE REFLOW SOLDERING

FRANZ WISER FROM VISHAY BC COMPONENTS AUSTRIA GMBH EXPLAINS THE CHALLENGES FACING COMPONENT MANUFACTURERS WHEN WORKING WITH ALUMINIUM ELECTROLYTIC CAPACITORS AND THE NEW DIRECTIVES

When working with aluminium electrolytic capacitors containing non-solid electrolyte, fine-tuning of reflow profiles for lead (Pb)-free soldering must be accompanied by significant improvements to device construction to prevent serious damage of components during soldering at elevated temperatures.

The higher peak temperatures necessary for lead (Pb)-free soldering have increased the likelihood of thermal damage to components. IPC soldering guidelines recommend keeping case temperatures below 245°C for large devices, but even if this target is met, the long exposure times are sufficient to result in boiling of the electrolyte used in standard electrolytic capacitors. This may destroy the component immediately and also has the potential to cause latent faults, impair operational performance or increase the drift of electrical characteristics with time leading to early failure. To avoid these problems, boiling of the electrolyte must either be prevented or the negative impact thereof kept to a minimum. This requires physical improvements both to the device and to the soldering process.

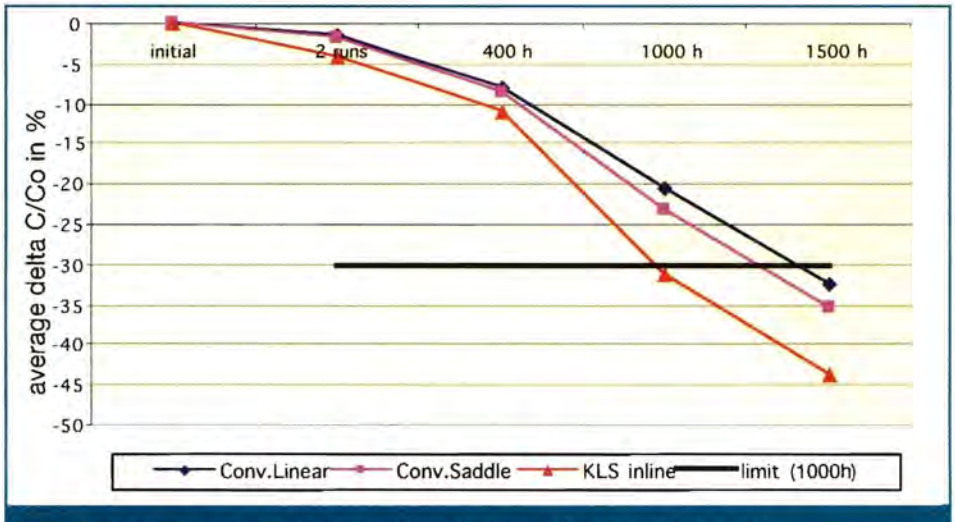

Figure 1: *Boiling may result in significant bulging of the capacitor casing*

Soldering at High Temperatures

Moves to drive out lead and other hazardous substances from electronic products are being adopted worldwide, following the commencement of the EU RoHS directive in July 2006. Now that China has swiftly implemented its own RoHS requirements for imported goods, all manufacturers need to have appropriate lead (Pb)-free processes in place.

Among the major considerations when implementing lead (Pb)-free assembly, proper process design should address the opportunity for components to suffer thermal damage during reflow. In the past, when working with SnPb solders and surface finishes, it has been feasible to establish a suitable reflow profile to avoid damage to the component by ensuring a sufficiently short time above the boiling point of the electrolyte. Now, however, reflow-profiling is more complex and difficult to optimise for all components on the board. Compared to SnPb solders, lead (Pb)-free SAC (tin-silver-copper) alloys require a significantly higher temperature between 235°C and 250°C and longer times in order to reflow. On the other hand, the IPC soldering standard J-STD-020C recommends peak case temperatures for

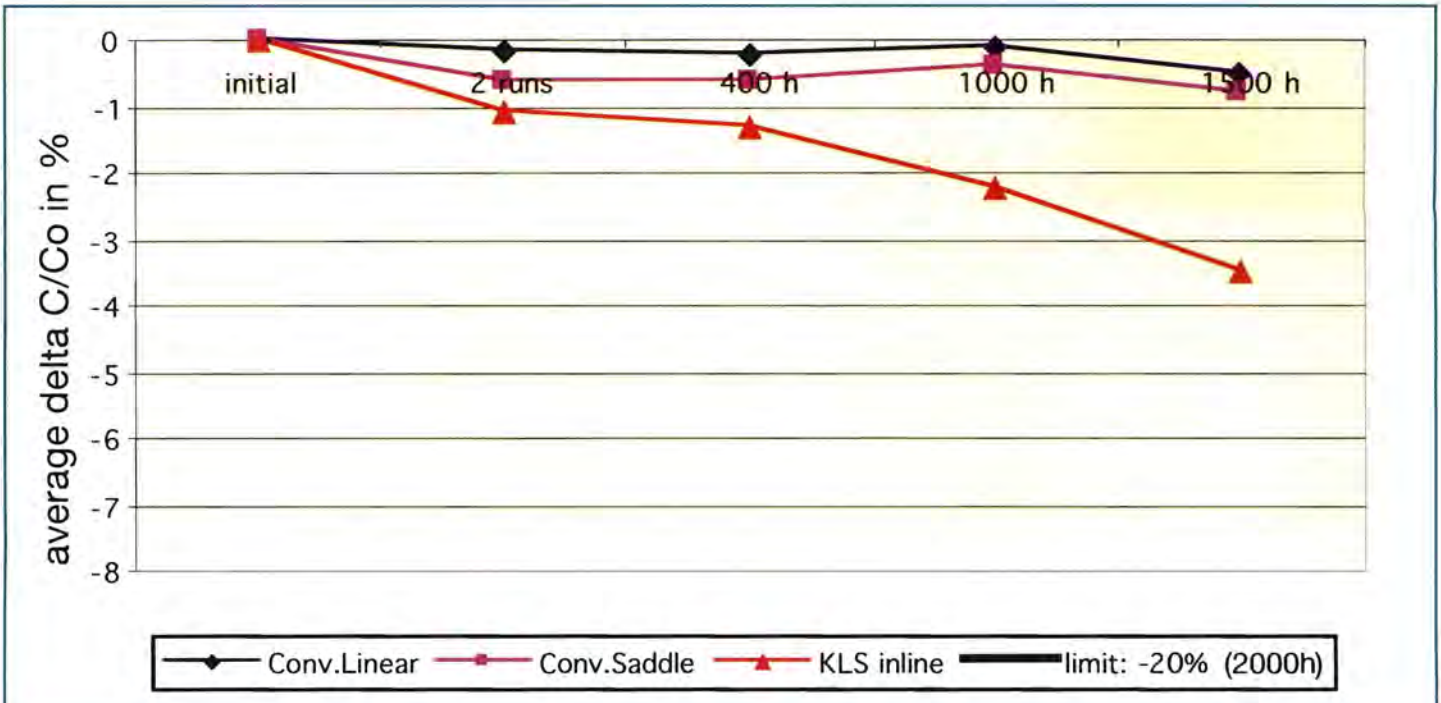

Figure 2: *Recommended structural enhancements for lead (Pb)-free surface-mount electrolytic capacitors*

various classes of devices. For large devices, defined as having height greater than 2.5mm and total volume more than 350mm^3, this is 245°C.

Clearly the process window is much narrower for lead (Pb)-free. It is not only difficult to control the reflow oven so accurately, but large differences between the thermal mass of various components on the board add to the challenges of achieving a suitable profile. It is even more difficult to achieve an optimal profile when small components are positioned close to those of very high thermal mass.

Electrolytic capacitors containing non-solid electrolyte are typically considered to be large components, under the IPC guidelines. As such, the peak reflow temperature is significantly higher than the boiling point of the electrolyte, which is normally below 200°C. In addition to the concerns over peak temperature, exposure times during reflow are also excessive for standard electrolytic capacitors with non-solid electrolyte.

Effects of Boiling

Boiling of electrolyte during reflow has always been a concern for manufacturers using surface mount electrolytic capacitors, as it increases the inner pressure excessively. The consequences include outgassing, where the vapourised electrolyte escapes from the device, usually by opening the pressure vent provided in the capacitor casing. This loss of electrolyte reduces the capacitance of the device, while the opening of the vent exposes the device to drying leading to increase of ESR and further loss of capacitance causing early failure.

Other potential effects of boiling include expansion of the capacitor can and the sealing rubber, as illustrated in **Figure 1**. Measured changes in length of the capacitor casing, resulting from high pressure due to evaporation of the electrolyte, have ranged from 0.15mm to more than 2mm. This expansion carries the risk of displacement or separation of internal components, such as terminations or electrodes, leading to open circuit or short-circuit faults. Other defects introduced, such as fractures or partial opens can create latent faults that can escape into the field causing early failure of the end equipment.

Even if evaporation does not occur, excessive heating of the electrolyte during reflow could impair electrical performance. The specific resistivity of the electrolyte can become changed, increasing the equivalent series resistance (ESR) of the capacitor. As the end equipment is operated, this will change the circuit behaviour, for example by increasing the CR time constant and thereby reducing the effective capacitance, as well as increasing losses leading to inefficient operation. A high ESR can also result in excessive capacitor operating temperatures and an associated reduction in reliability.

Accommodate or Counteract?

A number of philosophies may be applicable to enable the component to withstand higher peak temperature and longer preheat/soak duration. For example, one route may be to prevent evaporation by raising the boiling point of the electrolyte. However, increasing the boiling point would almost certainly demand a trade-off in terms of low-temperature performance. This is particularly unacceptable in, for example, automotive applications, which are required to withstand deep sub-zero temperatures as low as -40°C.

Other applications such as wireless base stations and other remotely installed equipment must also be able to function

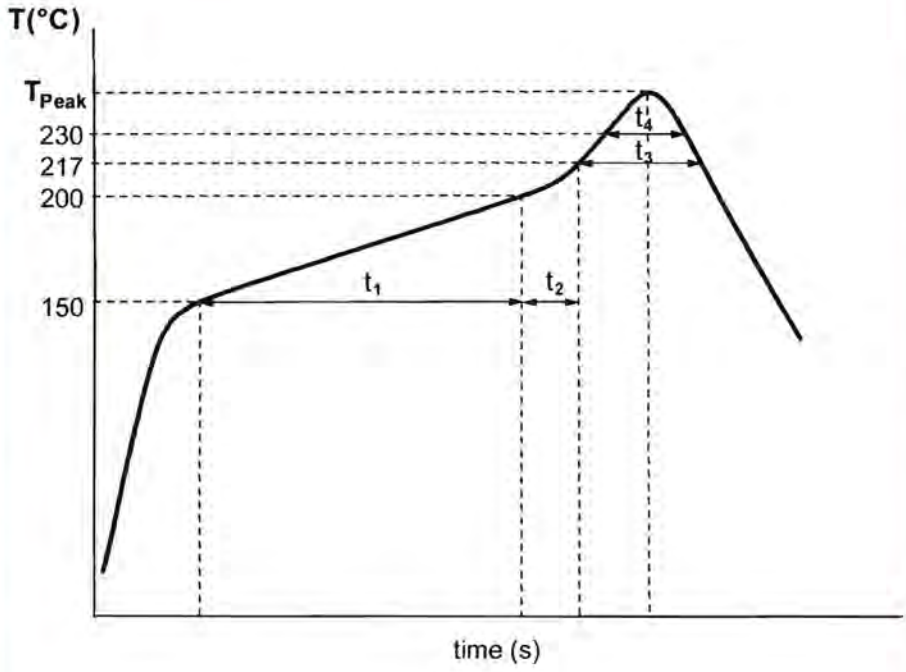

Lead-free reflow soldering conditions	
Profile features	**Dimensions 8 x 8 x 10 mm to 10 x 10 x 14 mm**
max. time from 150°C to 200°C (t1)	150 s
max. time from 200 °C to 217 °C, (t2)	60 s
max. time above $T_{Liquidus}$ (217°C), (t3)	90 s
max. time above 230°C (t4)	40 s
peak temperature T_{peak}	245 °C
max. time above T_{peak} minus 5°C	10 s

Temperature measuring point on top of the case and terminals.
Max. 2 runs with a pause of min. 30 min in between

Figure 3: *Lead (Pb)-free solder profile for CRZ and CRH capacitor types*

fully at very low temperatures. Today, it is not realistic to expect to create a high-boiling-point electrolyte that will also perform well when operated under conditions of low temperature.

An alternative approach may be to prevent the package from absorbing heat during reflow, for example by changing the colour and/or texture of the capacitor can. A highly reflective silver surface will absorb less heat. But it is important to remember that the objective of reflowing the component is to deliver heat into the component, in order to solder the terminations. Designing the package to reject heat raises the risk that the terminations will not reflow fully, leading to unreliable solder joints. A non-absorbing surface finish will also reduce the ability of the device to dissipate the heat produced during normal operation, leading to poor performance, efficiency and reliability in the end product.

It may also be possible to create an internal insulating structure to prevent the electrolyte being exposed to the reflow soldering energy. This is also impractical: adding material of poor thermal conductivity will inevitably impair heat dissipation during normal operation.

It is also valid to consider the possibility of attaching a heatsink to the component during reflow only. However, not only does attaching and detaching the heatsink add to the time and cost of assembly, but it may not be physically possible to attach a heatsink of suitable size. This is particularly true in assemblies where components are very closely spaced.

In fact, increasing the thermal mass of the capacitor in this way is not at all desirable. The result will be an increased demand for thermal energy from the reflow oven, to solder the terminations. Supplying this heat energy can easily induce excessive thermal stress in other components on the board.

Yet another approach may be to design a package that is tolerant of boiling and the associated expansion. This could be done, for example, by allowing the component casing to expand during reflow and then contract upon cooling. This, too, is not a suitable solution. As the case expands there is an increased risk of mechanical displacement of critical internal electrodes. The displacements can be large, since they are not governed by the relatively small coefficient of thermal expansion of any of the case materials, but by the much larger expansion caused by vapourisation of the electrolyte compound.

Another expansion-tolerant solution could be to implement an expansion chamber within the component to accommodate the increased volume of the overheated electrolyte during reflow. However, the obvious impact of this will be to increase the overall size of the component. This is not compatible with modern demands to miniaturise both the profile and footprint of all components, including passives as well as ICs.

Enhanced Materials and Construction

A more successful approach has been to counter the effects of the boiling of the electrolyte, for example by strengthening the capacitor construction and improving certain materials such as those used in the capacitor winding, to negate the adverse effects of excessive heating.

Figure 2 shows the cross-section of a surface mount aluminium electrolytic

capacitor, indicating where improvements to package materials and the capacitor windings enable the device to withstand the higher demands of a lead (Pb)-free reflow profile.

The use of enhanced aluminium alloys has allowed emerging generations of electrolytic capacitors to withstand much higher internal pressures generated during a lead (Pb)-free reflow profile without bursting. These can prevent loss of electrolyte due to expansion and evaporation, and should be used in conjunction with an enhanced sealing rubber at the edge of the can. Making the sealing rubber and baseplate from tough, high-melting-point materials further improves the capacitor's ability to prevent bulging and loss and evaporation of electrolyte.

To meet the special requirements for use in electrolytic capacitors, suitable alloys must also meet special requirements for purity to prevent ionic erosion of the aluminium due to the action of the electrolyte.

Increasing Temperature Stability

Further measures that are effective in creating next-generation capacitors capable of withstanding the rigours of lead (Pb)-free soldering include improving the stability of the aluminium oxide layer at the capacitor anode. The requirement for this is related to CTE mismatches and not to boiling of the electrolyte. The higher peak reflow temperature encourages a large expansion of the aluminium anode foil. As a result, the deposited oxide layer tends to crack and expose the foil. This will produce a short-term increase in the capacitor leakage current.

Although this effect is repaired over time by the action of electrical current during normal operation, Vishay BCcomponents has created an improved oxide and has also implemented processing enhancements to successfully increase the temperature stability of the oxide layer. This has significantly reduced the magnitude of any leakage current measured during normal operation of the end equipment after reflow. These structural enhancements and improved materials are shown to increase the ability of electrolytic capacitors to withstand reflow soldering.

Figure 3 describes the optimal lead (Pb)-free reflow profile for devices from sizes 8 x 8 x 10mm to 10 x 10 x 14mm. The relatively high thermal mass of electrolytic capacitors creates a more difficult challenge to optimise the reflow oven settings. Temperature measurement at several places on large components, such as capacitors, is recommended. For example, the soldering temperatures for capacitors should be measured not only at the terminals but also at the top of the case to ensure close correlation with the ideal profile.

A Better Life for Capacitors

The arrival of lead (Pb)-free technology has significantly reduced the process window for reflow soldering. The minimum temperatures for soldering are much higher than for ordinary SnPb assemblies, yet the maximum recommended temperatures for various types of devices remain the same. To avoid the risk of damage to electrolytic capacitors containing non-solid electrolyte, not only must process engineers assert greater control of reflow profile development, but component vendors must also take steps to improve capacitor design and construction to deliver more resilient and robust components to the market. This combined approach is recommended, to safeguard reliability and performance in lead (Pb)-free electronic products.

Figures 4 and **5** illustrate the increased long-term stability achieved by implementing the construction enhancements described. The diagrams show results collected from lifetime testing of capacitors when operated after lead (Pb)-free reflow in accordance with Figure 3, comparing capacitance drift and ESR increase in standard and enhanced devices. These illustrate a clear improvement in lifetime and stability, gained through improved materials and strengthened construction. ■

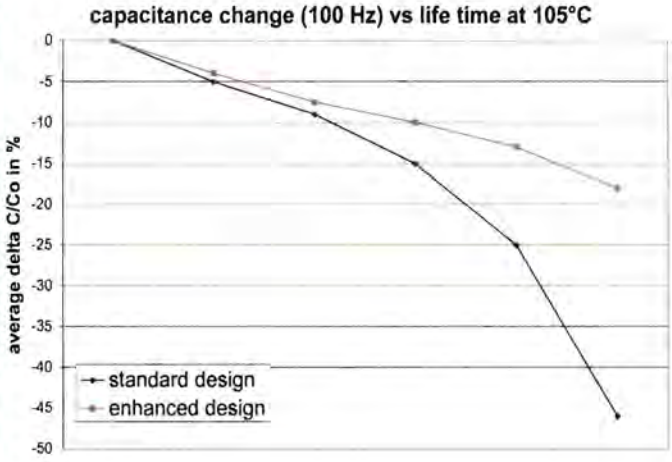

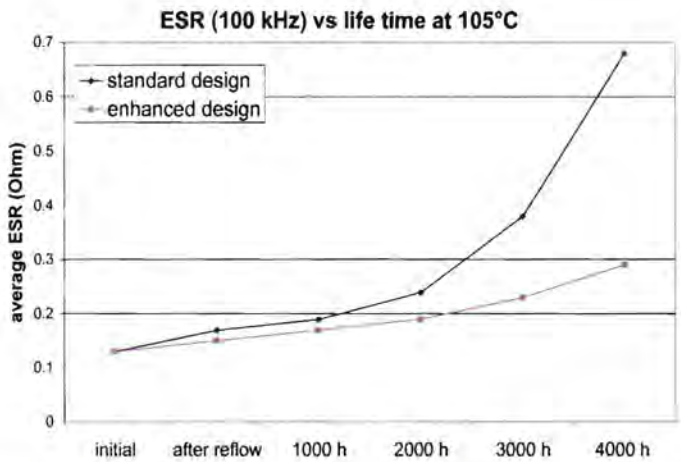

Figures 4 and 5: Lifetime after soldering

BOB HUNT, ADVANCED TECHNOLOGY DEVELOPMENT MANAGER AT C-MAC MICROTECHNOLOGY ANALYSES THE NEEDS OF THE AUTOMOTIVE, AEROSPACE AND DEFENCE INDUSTRIES FOR PACKAGING COMPONENTS

PACKAGING OF PASSIVE AND ACTIVE COMPONENT TECHNOLOGY

The majority of electronic components have an easy life. They are required to operate in relatively benign environments, such as an office or a home, running well within their design specifications for many years. They are usually non-critical, disposable products and often discarded without a second thought when they fail. However, components and assemblies destined for applications in very harsh environments require robust protection to achieve the reliability targets expected by the customer. These electronic systems are often utilised in mission-critical applications, within the automotive, defence and aerospace markets, for example, that must be fully functional in wide temperature ranges, high vibration conditions and confined spaces.

When discussing the packaging of passive and active component technology, it is essential to consider how the reliability criteria can be met for demanding and, often, mission-critical applications. The choices that designers face in the automotive, defence and aerospace markets are very different, but they share the requirement for high reliability and performance in severe environments, which has led to comparable quality assurance techniques.

Over the last 30 years there has been a rapid advancement in electronic packaging technologies, yet the objectives have always been the same: protecting electrical components in a cost-effective manner, maintaining minimal impact on electrical performance and maximising reliability in the application. In the past, the substrate of choice for such demanding applications was often conventional 96% aluminium oxide (Alumina). However, in more recent years, an alternative ceramic technology – low temperature co-fired ceramic (LTCC) – has increasingly found favour with high frequency electronic applications and provides a number of benefits for multi-layer interconnect.

MIL-STD-1553 remote terminal used on avionic data buses – this is manufactured as part of the military/aerospace side of the business

Reliability Factors

The fundamental reliability objective for any electronic component, module or system assembly is to operate in full compliance with the design specification over its defined lifetime. The key reliability differentiator in the infinitely wide range of applications and markets is the operating environment, and for most applications there are four critical areas of concern: electrical, thermal, mechanical and radiation.

* *Electrical*

The requirement for electrical reliability is two-fold. Firstly, it is essential to ensure that the design is comprehensively simulated and toleranced. It is also critical that the components function within their 'safe operating area' with respect to the manufacturers' specific operating parameters, with a particular focus on supply voltages, signal voltages and currents. Secondly, external influences must be accommodated. For example, this may require filtering on power supplies to eliminate any excessive supply spikes occurring on the internal supply rails.

* *Thermal*

Thermal energy, affecting the reliability of electronic systems and modules is generated in two main ways. Firstly, heat is generated internally from both active and passive circuit elements and secondly, from external heating influences. The typical failure mode occurs at the active junction of semiconductor devices, which often have a continuous maximum operating temperature of between 150°C and 200°C. Package design and mounting must ensure that manufacturers' recommended maximum temperatures are not exceeded. There are also many other thermally induced failures, which include fusing of interconnections, breakdown of epoxy joints and intermetallic affects.

* *Mechanical*

There are many influencing factors on mechanical reliability, but typically these are shock vibration and acceleration induced into the electronics by external forces occurring in the application. Conditions may be accentuated by resonances in the electronic assembly and in the majority of cases failure is due to destruction of the assembly, such as

detached components, open circuit connections or degradation of the packaging technologies.

** Radiation*

There are two main types of radiation that affect the electronic reliability of a system, with both requiring good package design and careful usage of radiation hard components to protect against damage. Firstly, electromagnetic compatibility (EMC) – the influence of electromagnetic waves generated by high frequency sources, can cause unwanted disturbance to electrical devices. The most common example of this is the effect of mobile phones upon electronic equipment found in hospitals or on aircrafts. Appropriate design, filtering and packaging with shielding is required to alleviate or eliminate the effect of electromagnetic waves on electronic systems.

Secondly, protection from nuclear or ionising radiation is widely recognised as critical to survivability in warfare and defence applications. It is also an important consideration for satellite electronics where nuclear radiation can influence the components. Again package design with filtering and shielding will ensure high reliability of a system.

Solutions

The vast majority of semiconductor die are packaged as single devices in high volumes. There is a wide range of package styles, but typically they are surface-mount. The cheapest solutions are the plastic moulded style, but high performance requirements use hermetic ceramic cavity packages.

The automotive industry requires high reliability packaging for harsh environmental locations such as the engine and gearbox. However, with low cost and high performance requirements driving the industry, coupled with the demands of high volume production, fully hermetic packaging is not usually used. Nevertheless, there are great advantages in using bare die, mainly in reducing the number of interconnections and junction temperatures, as well as the size of the overall package. The challenge, therefore, has been to design a low-cost encapsulation that provides similar protection to a hermetic enclosure.

Encapsulation compounds such as epoxy or silicone gel have been developed to fulfil this requirement. The careful matching of the encapsulant material to the application is key to maintaining reliability over many years. Specialist packaging manufacturers have accumulated years of experience in

Xenon High Intensity Discharge (HID) lamp controller – this is manufactured as part of the automotive side of the business

assisting customers in the correct material choice for their new designs. Complete end-to-end manufacturing and environmental test facilities ensure that new designs are built to exact specifications and are PPAP (production part approval process) tested using accredited test methods.

The choice of packaging is much more straightforward for aerospace applications and the main choice is usually between a Kovar bodied 'bath tub' in through-hole or flatpack configuration with expansion matched glass-metal seals or a high temperature co-fired ceramic (HTCC) package with, or without, integrated interconnect.

Military Approvals Case Study

During the 1990s, increasingly rigid standards such as MIL-STD-1772 were redefined as performance specifications. Today, MIL-PRF-38534 allows manufacturers more freedom but still relies on the detailed test methods such as those contained in MIL-STD-883 for material selection, process control and test methods. The work to refine and develop the MIL standards is carried out by committees and sub-committees from the JEDEC (Joint Electron Device Engineering Council) trade association in the US. These highly proactive groups of engineers ensure that electronic component test methods maintain pace with the fast developing packaging technologies. Leading edge European manufacturers have adopted the US Military working procedures to enable them to compete on an equal footing with US-based competitors.

Despite the increase in the usage of commercial-off-the-shelf (COTS) component grades for aerospace and defence electronics, the packaging of choice for extreme environments continues to be hermetic cavity enclosures of metal or ceramic. The enclosures house single or multiple die with passive components and multilayer interconnect. In a fully hermetic module, components are attached to an inorganic substrate (a platform to ensure there is no outgassing) patterned with a metal interconnect, which is often a precious metal such as gold for stability and long-term reliability. Component reliability, particularly for bare die is highly dependent on the internal atmosphere within the package cavity. This is heavily affected by the sealing process controls and the choice of organic materials used for the substrate and component attachment, as these materials can outgas over time and contaminate the internal cavity.

The use of epoxies for attaching both substrate and components in hermetic modules has been the subject of much development over the years. Low outgassing materials designed to meet MIL-STD 883 requirements were developed during the 1980s, which lead to a wide choice of ionically clean adhesives with long term adhesion strength over the full military operating temperature range of -55°C to 125°C. The correct material choice together with tightly controlled vacuum bake and sealing processes ensures that the low moisture environment is maintained over the full lifespan of the product.

Experience in both the defence and aerospace markets also provides an excellent background for addressing the increasing use of electronics applications in 'down-well' drilling applications. Also, as the oil industry seeks to maximise the yield from their existing wells, the need for reliable components and modules in these extreme environments will inevitably increase.

The Future of Packaging

In conclusion, the reliability requirements for electronics in harsh environments are essentially the same for the automotive, defence and aerospace markets, but have been approached from different perspectives. As the cost of military electronics becomes more significant in the overall budget so will the drive to find more cost-effective solutions for key applications. Therefore, the convergence of differing packaging technologies suggests an increase in the adoption of proven automotive materials in military applications.

Cost reduced quasi-hermetic modules are finding an increasing number of applications where metal or HTCC enclosures have been previously been used. Specialist high-reliability packaging manufacturers with extensive experience in both markets are ideally placed for addressing electronics design challenges in all environments. ■

LET THERE BE LIGHT!

By Chris Williams, UKDL

Did you know that on average 20% of the global production of electricity is used to create light? That figure can reduce to 5-10% in heavily industrialised countries such as those in Europe and parts of the Far East, but it rises to 80% in under-developed countries. Not only that, but 25% of the world's population still rely on kerosene lamps (and similar) as their only source of light after the sun goes down.

That is an awful lot of power being used just to make light. It's a shame that when we are generating light, we are also wasting much (most!) of that energy as heat. Look at some examples in the table here.

Type of lamp	Lumens per watt	Total lumens	Rest of energy wasted as heat
Ideal white light	**250**	**250**	**0 Watts per input Watt**
100W tungsten incandescent	**17.5**	**1,750**	**93W**
40W tungsten incandescent	**12.6**	**504**	**38W**
50W quartz halogen	**24**	**1,200**	**45W**
36W fluorescent tube T8	**Up to 93**	**3,348**	**23W**
28W fluorescent tube T5	**104**	**2,912**	**16W**
1W white LEDs (in production)	**25–70**	**25–70**	**0.90–0.72W**
White LEDs in laboratory	**100**	**100**	**0.60W per input Watt**

Ouch! When you see that 93 watts of a 100-watt incandescent light bulb are wasted as heat, you can understand why you burn your hand if you try and change a failed bulb too quickly. Isn't this just a criminal waste of energy? You are not making light with a bulb like this – you are heating the room. Yet the tough facts are most of us use simple incandescent lamps in our homes because they are cheap.

There about 23 million homes in the UK. If we guess that there are on average ten bulbs in each house, with four of those at 100 and six at 40 watts, then we would have a national domestic lighting power budget of 23 million (houses) x (4 x 100 watts + 6 x 40 watts) = 14,720 million watts of power to light up just these bulbs. But of this power load, as much as 23 million x (4 x 93 watts + 6 x 38 watts) = 13,800 million watts is wasted as heat. So, just 920 million watts of the 14,720 million watts of electrical power is actually converted to light. Pretty wasteful, isn't it?!

Now you can see why there is so much pressure from governments to get us to move over to much more efficient lighting. In the UK, the government department DEFRA has developed a range of documents available to the public that illustrate why it is pushing to get us to move over to more efficient ways of implementing indoor and outdoor lighting. For more information try looking at documents on this link: **www.mtprog.com/SelectProductStrategySector.aspx?intSelection=4.**

For a purely hypothetical exercise, let's look at what we might save by going over to T5 fluorescent lamps in our homes. If we make a simple, but no doubt inaccurate, guess that we can replace ten bulbs per house with just five fluorescent fittings because they are much more efficient and we don't need so many lamps to make the same amount of light, then the new power equation becomes 23 million (homes) x (5 x 28 watts) = 3220 million watts of electrical power needed, with 23 million x (5 x 16 watts) = 1840 million watts wasted as heat.

So, if we did this theoretical change and moved from incandescent bulbs to T5 fluorescent fittings, we would reduce the electrical load of the UK by 11,500 million watts and reduce the power wastage lost as heat by a staggering 11,960 million watts.

This is a hypothetical and completely useless exercise, but it shows several points clearly:

- There really is a potentially huge benefit to the country by moving from incandescent lighting to a far more efficient type of lighting;
- Making such a change at every home in the land would result in a need for fewer power stations;
- The tremendous power saving is fully understood by industry and commerce and is the reason why so many light fixtures in industrial and commercial buildings are fluorescent and not incandescent.

Unfortunately, there is quite a battle going on out there. On the one side, you have the evangelisers who want us to reduce our use of power by implementing high efficiency light sources, and by cutting down on the amount of light we use anyway (Google "Dark Skies" initiative). On the other, you have lighting manufacturers who want to sell us their most profitable items. For as long as we have a marketplace that will buy products that are cheap, rather than products that benefit the country the most, we will have an unsolvable conundrum.

Actually, it gets worse... In recent years,

compact fluorescent lamps have been introduced to overcome the market objection that standard fluorescent tubes and their fittings are bulky, and just too big and utilitarian to be used in most domestic houses. The compact fluorescents were designed to be much more like the standard incandescent bulbs that they replaced. Nice idea – but – every commercial and compact fluorescent lamp contains mercury, a heavy metal which is now classed as a deadly poison and which is by law to be excluded from every walk of our lives wherever possible.

So, we are being asked to replace incandescent lamps that are inefficient but safe, with compact fluorescent lamps that are more efficient but contain mercury. What happens if you break the bulbs? Can you just pick up the bits and throw them in the dustbin? I bet that's what you all do without even thinking of it, yet, by law, we should look to have specialist cleaners come in to remove all trace of the poisonous heavy metal residue. Maybe a mass migration over to compact fluorescent lamps is not necessarily a good thing after all. We can't pretend that compact and normal fluorescent lamps don't fail, and we can't ignore the dangers of casual disposal of items containing mercury. We are each responsible for our little bit of the world and we need to look after it responsibly, as best we can.

NOW YOU CAN SEE WHY THERE IS SO MUCH PRESSURE FROM GOVERNMENTS TO GET US TO MOVE OVER TO MUCH MORE EFFICIENT LIGHTING

What we need is a highly efficient light source that uses no heavy metals, which is cheap to manufacture, and which has a good colour rendition. It needs to be available in power levels from, say, 10 watts up to probably 500 watts, and it would be great if we could get as much as 150 to 200 lumens of white light for each watt of electrical energy we used to drive it.

Got any ideas?

Chris Williams is Network Director at the UK Display & Lighting Knowledge Transfer Network (UKDL KTN)

FAST RESPONSE THERMISTOR SENSORS

Semitec the world's most innovative NTC manufacturer, offers a range of novel, fast-acting thermistor sensors for temperature control problems in the electronics industry.

Cost-effective, mini TO-220 style packages with R25s from 1kΩ to 100kΩ can be mounted directly to a P.C.B. or fitted with flying leads. Exposed bead sensors monitor and control rapid air-flow movement and "Soft-touch" sensors operating to 200°C offer time constant as fast as 0.5s.

Our latest NC sensors reacts quickly to I.R. output in non-contact applications where thermopiles would be restricted by high local ambients.

Let us help you solve your temperature control problem, contact us today.

ATC Semitec Ltd
Unit 14 Cosgrove Business Park
Daisy Bank Lane, Anderton,
Northwich Cheshire, CW9 6FY
Tel: 01606 871680 Fax: 01606 872938
Email: sales@atcsemitec.co.uk
Web: www.atcsemitec.co.uk

PCB-POOL®
SERVICING YOUR COMPLETE PROTOTYPE NEEDS

1 EUROCARD
(160 x 100 mm)
+ Tooling
+ Photoplots
+ VAT
€49
Price example
Any size and contour possible!

Over 15.000 Customers

Optional:
- Soldermask
- Fast-turnaround
- Silkscreen
- 4-Layer Multilayer
- 6-Layer Multilayer

LEAD FREE

DOWNLOAD OUR FREE LAYOUT SOFTWARE!

Freephone
0800-3898560

p-cad Protel EDWin orcad GraphiCode Electronics Easy-PC

Simply send your files and order ONLINE: **PCB-POOL.COM**

APPLICATION OF CDTA IN THE REALISATION OF CURRENT-MODE ACTIVE FILTER

There are many configurations reported in literature for realising current mode (CM) universal filter topologies. Some deploy multiple inputs and single output or single input and multiple outputs using different active devices. However, they also tend to suffer from the drawbacks of either using a large number of active and/or passive components or require change in the circuit topology to implement notch and allpass filtering signals.

A very few CM filters have been constructed around the recently introduced current-mode active circuit building block as in current differencing transconductance amplifier (CDTA), such as in Dalibor Biolek's *"CDTA – Building Block for Current-Mode Analog Signal Processing"* published in ECCTD'03, Krakow, Poland, pp.397-400, 2003. With CDTA one can obtain filter circuits employing lesser number of passive components vis-à-vis its counterparts using other active devices, and in some applications it can also lead to compact circuit configurations.

Here, we are proposing a CM universal filter with three inputs and two outputs, using two CDTAs, two grounded capacitors and a single grounded resistor. The circuit implements all five filtering responses – lowpass (LP), highpass (HP), bandpass (BP), notch and allpass (AP) – without requiring any changes to be made to the circuit topology or the need for additional components or rotation of components.

The proposed circuit uses grounded capacitors, making the circuit ideally suitable for IC design implementation. The circuit enjoys the advantage of having high output impedance, thereby providing cascadibility for higher order signals. The sensitivity figures are very low, thereby improving the performance of the circuit. The pole frequency ω_o and quality factor Q are orthogonally tunable.

The CDTA shown in **Figure 1** is characterised by the following port relations:

$V_p = V_n = 0 \qquad I_z = I_p - I_n \quad I_{x+} = gV_z \quad I_{x-} = -gV_z$

From the routine analysis of the CM circuit depicted in **Figure 2,** the output currents I_{o1} and I_{o2} are given by:

$$I_{o1} = \frac{-I_{in1}g_1g_2R - I_{in2}sg_2RC_1 + I_{in3}[s^2C_1C_2R + sC_1 + g_1g_2R]}{s^2C_1C_2R + sC_1 + g_1g_2R}$$

$$I_{o2} = \frac{-I_{in1}g_1g_2R - I_{in2}sg_2RC_1}{s^2C_1C_2R + sC_1 + g_1g_2R}$$

From Equation 2 we can see that:

1. If $I_{in1} = I_{in}$ and $I_{in2} = I_{in3} = 0$, an inverse lowpass filter is realised;
2. if $I_{in2} = I_{in}$ and $I_{in1} = I_{in3} = 0$, an inverse bandpass filter is realised with a passband gain of $G_{BP} = g_2R$;
3. if $I_{in1} = I_{in2} = I_{in3} = I_{in}$, a highpass filter is realised with the condition ; $g_2 = \frac{1}{R_2}$;
4. if $I_{in2} = I_{in3} = I_{in}$ and $I_{in1} = 0$, a notch filter is realised with the condition . $g_2 = \frac{1}{R_2}$

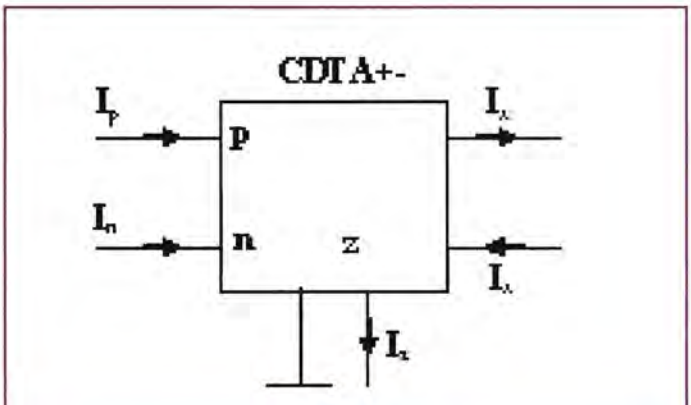

Figure 1: *Symbol of CDTA element*

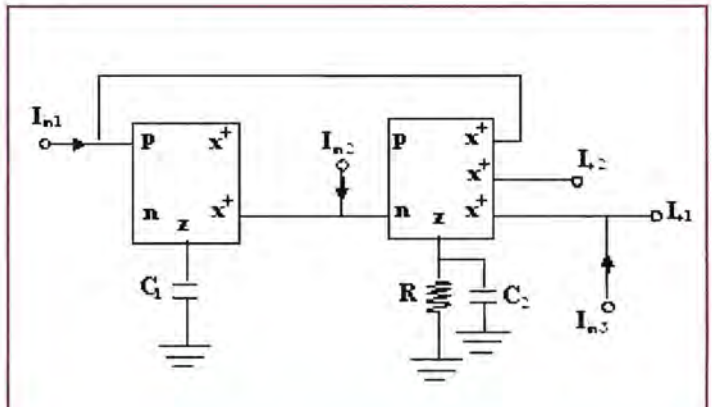

Figure 2: *Proposed CM universal filter*

From Equation 3 it is clear that:

1. if $I_{in1} = I_{in}$ and $I_{in2} = 0$, an inverse lowpass filter is realised;
2. if $I_{in2} = I_{in}$ and $I_{in1} = 0$, an inverse bandpass filter is realised with passband gain $G_{BP} = g_2R$;
3. if $I_{in2} = I_{in3} = I_{in}$ and $I_{in1} = 0$, $I_o = I_{o1} + I_{o2}$ an allpass filter is realised with the condition $g_2 = \frac{1}{R_2}$.

The filtering performance factors pole frequency ω_o, quality factor Q and bandwidth ω_o/Q are given by:

$$\omega_o = \sqrt{\frac{g_1 g_2}{C_1 C_2}}$$

$$Q = R\sqrt{\frac{g_1 g_2 C_2}{C_1}}$$

$$\frac{\omega_o}{Q} = \frac{1}{C_2 R}$$

Inspections of Equations 4, 5 and 6 reveals that ω_o can be electronically tuned by g_1 and/or g_2, without disturbing ω_o/Q and Q by resistor R which can be made voltage dependent without upsetting ω_o.

Active and passive sensitivities are given by:

$$S_{g_1}^{\omega_o} = S_{g_2}^{\omega_o} = -S_{C_1}^{\omega_o} = -S_{C_2}^{\omega_o} = \frac{1}{2}$$

$$S_{g_1}^{Q} = S_{g_2}^{Q} = S_{C_2}^{Q} = -S_{C_1}^{Q} = \frac{1}{2}$$

$$S_R^Q = 1$$

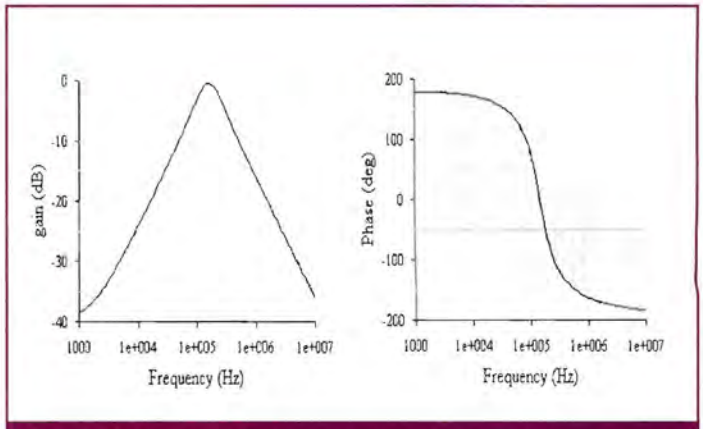

Figure 3: *Simulated responses of bandpass and allpass signals*

$$S_R^{\frac{\omega_o}{Q}} = S_{C_2}^{\frac{\omega_o}{Q}} = -1$$

which are all less than or equal to one.

To verify the theoretical analysis, the circuit has been simulated using PSPICE simulation program. The CMOS realisation of CDTA is given by A. Uygur and H. Kuntman in *"Low-voltage Current Differencing Transconductance Amplifier in a Novel Allpass Configuration"*, IEEE MELECON, pp. 23-26, 2006. CDTA can also be implemented by CCII and OTA as given by Biolek (as above). The filter was designed for a natural frequency ω_o = 159kHz and quality factor Q = 1 with the following settings: R = 1kΩ, $C_1 = C_2$ = 1nF, $g_1 = g_2$ = 1mS. **Figure 3** shows the simulated frequency responses for bandpass and allpass filtering signals.

N. A. Shah, Munazah Quadri and **S.Z. Iqbal**
India

ORDER FORM – PLEASE HAND THIS TO YOUR NEWSAGENT

Please reserve one copy of Electronics World for me each month. I do/do not want the magazine delivering to my home address (delete as appropriate)

Name

Address

Post code

Telephone

Date

Signature

ELECTRONICS WORLD

This series of Tips 'n' Tricks addresses the challenges with a collection of power supply building blocks, digital level translation blocks and even analogue translation blocks. Throughout the series, multiple options are presented for each of the transitions, spanning the range from all-in-one interface devices to low-cost discrete solutions. In short, all the blocks a designer is likely to need for handling the 3.3V challenge, whether the driving force is complexity, cost or size.

NOTE: The tips 'n' tricks presented here assume a 3.3V supply. However, the techniques work equally well for other supply voltages with the appropriate modifications.

TIP 1: 5V → 3.3V ACTIVE ANALOGUE ATTENUATOR

This tip refers to reducing a signal's amplitude from a 5V to 3.3V system using an op-amp.

The simplest method of converting a 5V analogue signal to a 3.3V analogue signal is to use a resistor divider with a ratio R1:R2 of 1.7:3.3. However, there are a couple of problems with it:

1) The attenuator may be feeding a capacitive load, creating an unintentional low pass filter;

2) The attenuator circuit may need to drive a low-impedance load from a high-impedance source.

Under either of these conditions, an op-amp becomes necessary to buffer the signals. The op-amp circuit necessary is a unity gain follower (see **Figure 1**). This circuit will output the same voltage that is applied to the input.

To convert the 5V signal down to a 3V signal, it's simply a matter of adding the resistor attenuator.

If the resistor divider is before the unity gain follower, then the lowest possible impedance is provided for the 3.3V circuits. Also, the op-amp can be powered from 3.3V, saving some power. If the X is made very large, then power consumed by the 5V side can be minimised.

If the attenuator is added after the unity gain follower, then the highest possible impedance is presented to the 5V source. The op-amp must be powered from 5V and the impedance at the 3V side will depend upon the value of R1||R2.

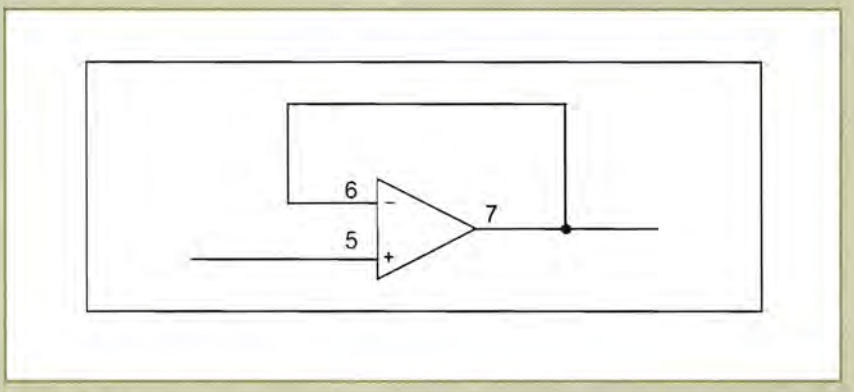

Figure 1: *Unity gain*

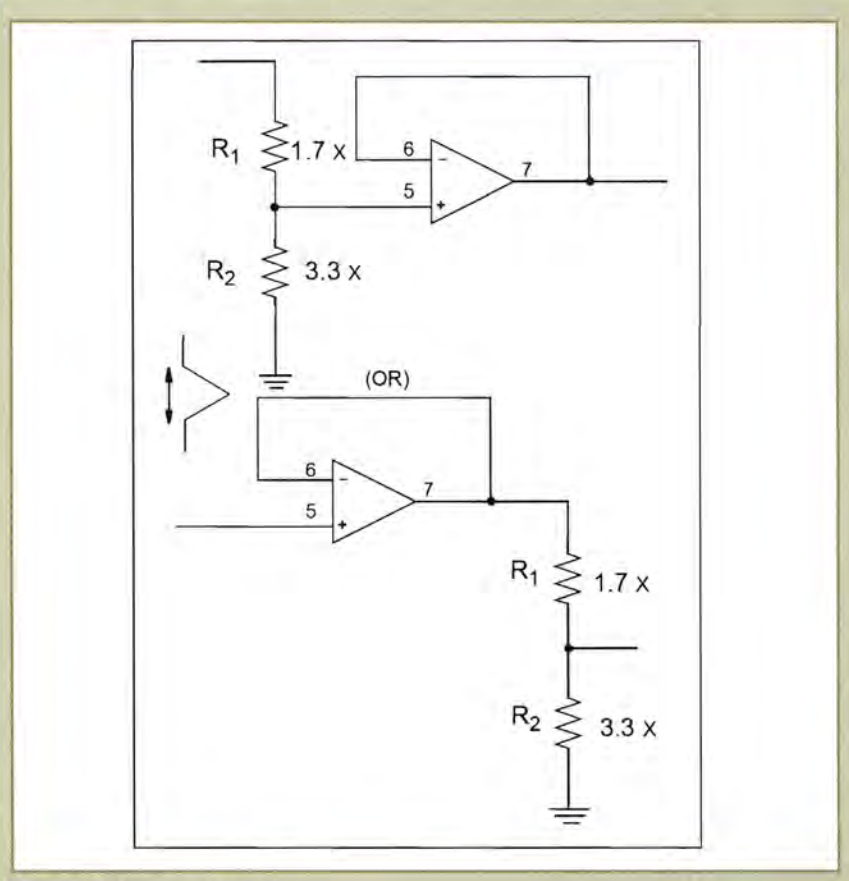

Figure 2: *Op-amp attenuators*

TIP 2: 5V → 3V ANALOGUE LIMITER

When moving a 5V signal down to a 3.3V system, it is sometimes possible to use the attenuation as gain. If the desired signal is less than 5V, then attaching that signal to a 3.3V ADC will result in larger conversion values. The danger is when the signal runs to the 5V rail. A method is therefore required to control the out-of-range voltages while leaving the in-range voltages unaffected. Three ways to accomplish this will be discussed here.

1. Using a diode to clamp the overvoltage to the 3.3V supply;
2. Using a Zener diode to clamp the voltage to any desired limit;
3. Using an op-amp with a diode to perform a precision clamp.

The simplest method to perform the overvoltage clamp is identical to the simple method of interfacing a 5V digital signal to the 3.3V digital signals. A resistor and a diode are used to direct excess current into the 3.3V supply. The resistor must be sized to protect the diode and the 3.3V supply, all the while not adversely affecting the analogue performance.

If the impedance of the 3.3V supply is too low, then this type of clamp can cause the 3.3V supply voltage to increase. Even if the 3.3V supply has good low impedance, this type of clamp will allow the input signal to add noise to the 3.3V supply when the diode is conducting and if the frequency is high enough, even when the diode is not conducting due to the parasitic capacitance across the diode.

To prevent the input signal from affecting the supply or to make the input more robust to larger transients, a variation is to use a Zener diode. The Zener diode is slower than the fast signal diode typically used in the first circuit. However, they are generally more robust and do not rely on the characteristics of the power supply to perform the clamping. The amount of clamping they provide is dependant upon the current through the diode.

This is set by the value of R1. R1 may not be required if the output impedance of the VIN source is sufficiently large.

If a more precise overvoltage clamp is required that does not rely upon the supply, then an op-amp can be employed to create a precision diode. In **Figure 5**, such a circuit is shown. The op-amp compensates for the forward drop in the diode and causes the voltage to be clamped at exactly the voltage supplied on the non-inverting input to the op-amp. The op-amp can be powered from 3.3V if it is rail-to-rail.

Because the clamping is performed by the op-amp, there is no affect on the power supply. The impedance presented to the low voltage circuit is not improved by the op-amp; it remains R1 in addition to the source circuit impedance.

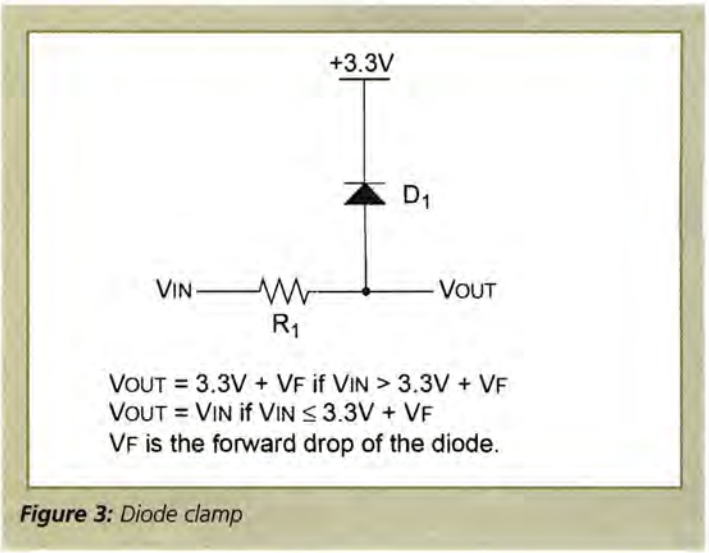

Figure 3: *Diode clamp*

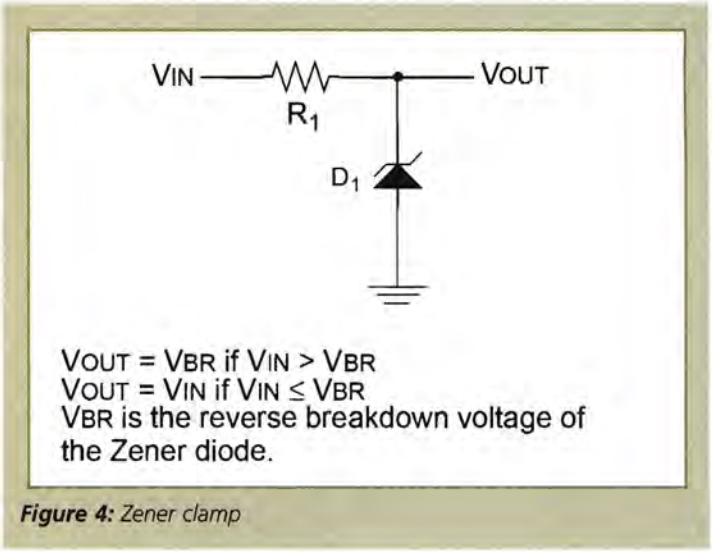

Figure 4: *Zener clamp*

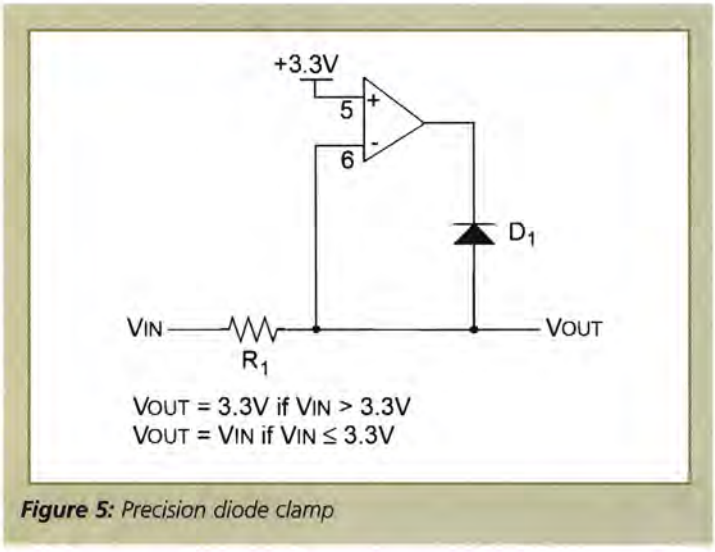

Figure 5: *Precision diode clamp*

TIP: OPTIMISING GATE TIMING WITH EXTERNAL FET DRIVER FOR HIGH INPUT VOLTAGE STEP-DOWN CONVERTER

By George Yu and Henry Zhang, Linear Technology

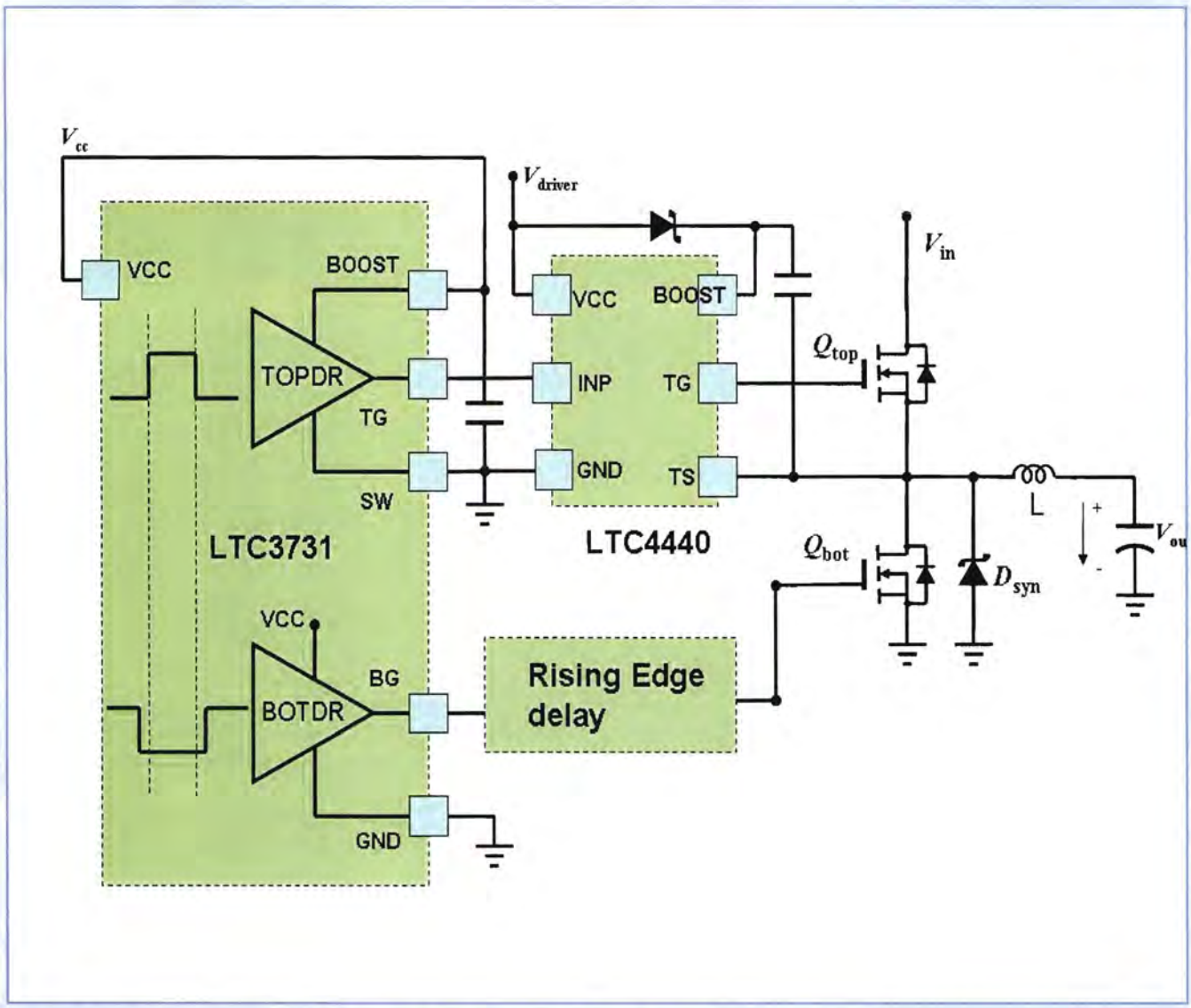

Figure 6: *An external gate driver (LTC4440) at the top gate extends the input voltage range of a LTC3731 synchronous buck*

Many industrial applications require a non-isolated low voltage supply from a high voltage input. To extend the input voltage range of a regulator that could not normally accept the high input voltage, high voltage external MOSFET drivers can be used.

Figure 6 shows a high input voltage buck circuit using a LTC3731 switching regulator with a LTC4440 high side gate driver. The LTC3731 is a 3-phase synchronous buck regulator, which we chose for its high efficiency in high input-to-output voltage differentials. Its rated maximum input is 36V, but that limit is imposed entirely by the integrated FET drivers. We extend the input range of the regulator by bypassing the integrated FET drivers and use the LTC4440 FET driver, which is rated for 80V.

The gate timing of the top FET and bottom FET in a synchronous buck converter is critical. As shown in **Figure 7**, the external driver LTC4440 introduces a propagation delay from the LTC3731's top driver output (TG) to the top FET gate signal Q_{top}.

Telnet

Quality second-user test & measurement equipment

Tel: 02476 650 702 Fax: 02476 650 773

Web: www.telnet.uk.com Email: sales@telnet.uk.com

All equipment is used – with 30 days guarantee and 90 days in some cases. Add carriage and VAT to all goods.

1 Stoney Court, Hotchkiss Way, Binley Industrial Estate Coventry CV3 2RL ENGLAND

Agilent (HP) 3314A Function Generator 20 MHz	£650	Agilent (HP) 53181A Frequency Counter	£750
Agilent (HP) 3325A and B function gen. from	£550	Agilent (HP) 4284A Precison LCR Meter	£5750
Agilent (HP) 435A/B, 436A, 4637B, 438A Power Meters from	£100	Agilent (HP) 6031A Power Supply (20V – 120A)	£1250
Agilent (HP) 3561A Dynamic Signal Analyser	£2950	Agilent (HP) 6032A Power Supply (60V – 50A)	£2000
Agilent (HP) 3562A Dual Ch. Dynamic Sig. Analyser	£2750	Agilent (HP) 6671A Power Supply (8V – 200A)	£1350
Agilent (HP) 3582A Spectrum Analyser Dual Channel	£995	Agilent (HP) E4411A Spectrum Analyser (9kHz – 1.5GHz)	£2995
Agilent (HP) 3585A and B Spec. An. (40MHz) from	£2500	Agilent (HP) 8924C CDMA Mobile Station Test Set	£3000
Agilent (HP) 35660A Dynamic Sig. An	£2950	Agilent (HP) E8285C CDMA Mobile Station Test Set	£3000
Agilent (HP) 4191A R/F Impedance analyzer (1 GHz)	£2995	Agilent (HP) 54520A 500MHz 2 Channel Oscilloscope	£1000
Agilent (HP) 4192A L/F Impedance Analyser (13MHz)	£3500	Agilent (HP) 54645D 100MHz Mixed Signal Oscilloscope	£3000
Agilent (HP) 4193A Vector Impedance Meter	£2750	Agilent (HP) 8713B 300kHz – 3GHz Network Analyser	£4500
Agilent (HP) 4274A LCR Meter	£1750	Agilent (HP) 8566B 100Hz – 22GHz High Performance Spec. An.	£7000
Agilent (HP) 4275A LCR Meter	£2750	Agilent (HP) 8592B 9kHz – 22GHz Spectrum Analyser	£6250
Agilent (HP) 4276A LCR Meter	£1400	Amplifier Research 10W1000B Power Amplifier (1 GHz)	£4700
Agilent (HP) 4278A Capacitance Meter (1KHz / 1MHz)	£2500	Anritsu ML 2438A Power Meter	£1400
Agilent (HP) 5342A Frequency Counter (18GHz)	£850	Rohde & Schwarz SMY01 9kHz – 1040 MHz Signal Generator	£1750
Agilent (HP) 5351B Frequency Counter (26.5GHz)	£2250	Rohde & Schwarz CMD 57 Digital Radio Comms Test Set	£4250
Agilent (HP) 5352B Frequency Counter (40GHz)	£3950	Rohde & Schwarz XSRM Rubidium Frequency Standard	£3750
Agilent (HP) 53310A Mod. Domain An (opt 1/31)	£2750	Rohde & Schwarz CMD 80 Digital Radio Comms Test Set	£3500
Agilent (HP) 54600A / B 100 MHz Scopes from	£700	R&S SMIQ-03B Vector Sig. Gen. (3 GHz)	£7000
Agilent (HP) 54810A Infinium Scope 500MHz	£2995	R&S SMG (0.1 – 1 GHz) Sig. Gen.	£1750
Agilent (HP) 8116A Function Gen. (50MHz)	£1500	Tektronix THS 720A 100MHz 2 Channel Hand-held Oscilloscope	£1250
Agilent (HP) 8349B (2- 20GHz) Amplifier	£1750	W&G PFJ 8 Error & Jitter Test Set	£4500
Agilent (HP) 8350B Mainframe sweeper (plug-ins avail)	£250	IFR (Marconi) 2051 10kHz-2.7GHz) Sig. Gen.	£5000
Agilent (HP) 85024A High Frequency Probe	£1000	Wayne Kerr AP 6050A Power Supply (60V – 50A)	£1850
Agilent (HP) 8594E Spec. An. (2.9GHz) opt 41,101,105,130)	£3995	Wayne Kerr AP 400-5 Power Supply (400V – 5A)	£1300
Agilent (HP) 8596E Spec. An. (12.8 GHz) opt various	£6500	Wayne Kerr 3260A+3265A Precision Mag. An. with Bias Unit	£5500
Agilent (HP) 89410A Vector Sig. An. Dc to 10MHz	£7500	Wayne Kerr 3245 Precision Ind. Analyser	£1750
Agilent (HP) 89440A Vector Signal Analyser 2MHz – 1.8GHz	£7750	Wayne Kerr 6425 Precison Component Analyser	£2000
Agilent (HP) 33120A Function/Arbitrary Waveform Generator 15MHz	£850	Wavetek 9100 Universal Calibrator (Opts 100 / 250)	£9000
Agilent (HP) 53131A Frequency Counter	£750	Various other calibrators in stock. Call for stock / prices	

No Compromise Oscilloscope

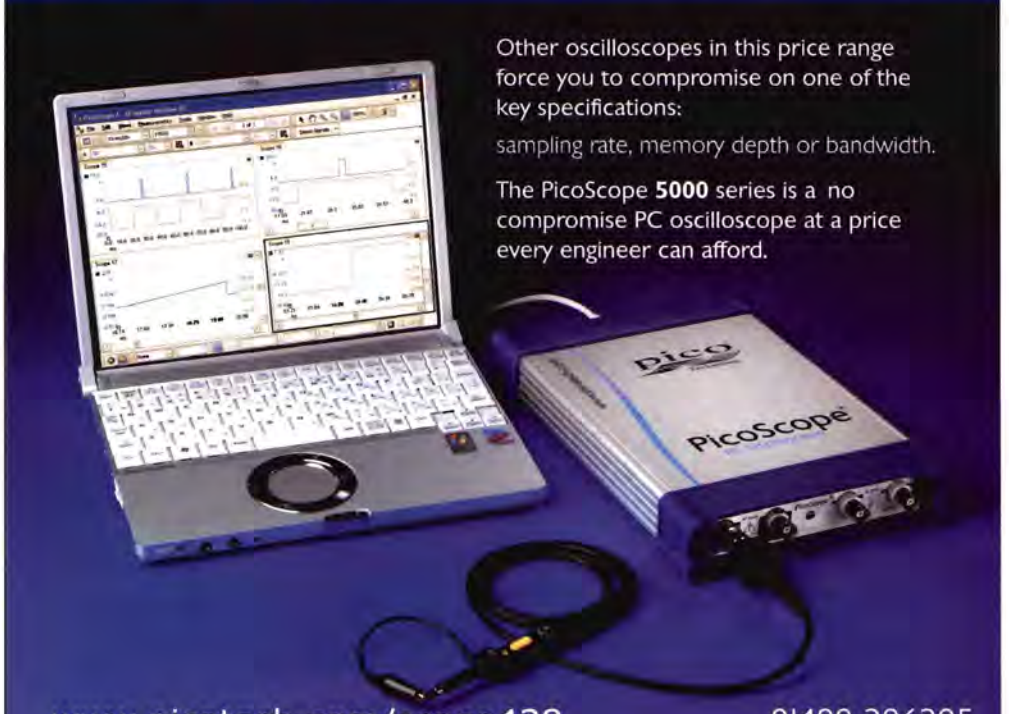

Other oscilloscopes in this price range force you to compromise on one of the key specifications:

sampling rate, memory depth or bandwidth.

The PicoScope **5000** series is a no compromise PC oscilloscope at a price every engineer can afford.

www.picotech.com/scope438 01480 396395

pico® Technology

1GS/s sampling rate

250MHz bandwidth

128M sample buffer memory

125MS/s 12 bit AWG built in

PicoScope 5203
32M buffer **£1195**

PicoScope 5204
128M buffer **£1795**

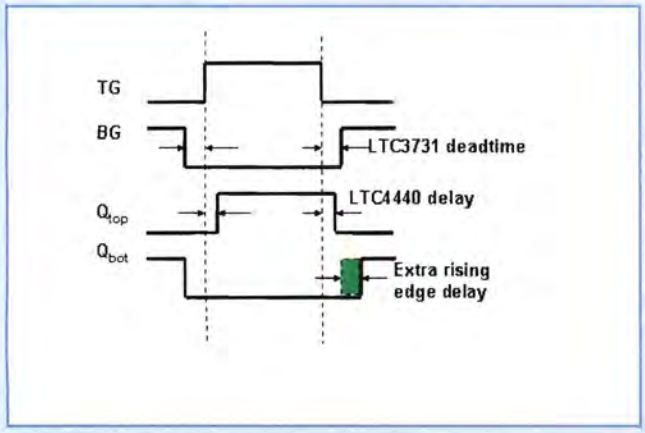

Figure 7: *Extra rising edge delay is needed for the bottom gate to account for the delay induced by the external LTC4440 FET driver at the top gate*

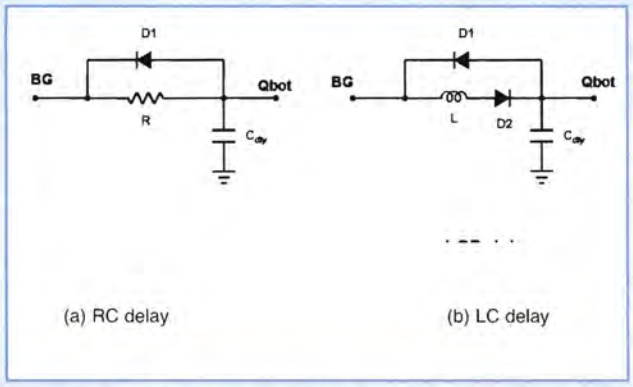

Figure 8a *and* ***8b:*** *Two ways to realise a rising edge delay to induce the required dead time in the bottom gate signal. The RC delay solution may require additional edge shaping to maintain converter efficiency. Both solutions achieve similar delay targets, as shown in Figure 9*

Although the LTC3731 has build-in dead time, it may not be sufficient when considering the delay time introduced by LTC4440. Sufficient dead time is needed to avoid possible short through from top FET to bottom FET. Something is needed to delay the rising edge of the bottom MOSFET gate signal Q_{bot}.

Figure 8a shows a popular RC delay circuit used to slow down the rising edge of gate signal and increase dead time. This RC is often followed by an edge-shaping circuit to improve the slow rising edge that would otherwise cause additional switching loss. Unfortunately, the edge shaping circuit requires an extra driver circuit, at more than significant incremental cost.

Figure 8b shows an alternative, LC passive delay circuit. C_{dly} could be the equivalent gate capacitance of the driving MOSFET. D1 and D2 are both Schottky diodes. D1 is used to speed up the falling edge and D2 is used to block the unnecessary ringing during turn off. **Figure 9** compares the simulated waveforms of the rising edge delay with RC and LC methods to achieve the same delay time target. V_{sw} is the switch node voltage waveform. The LC delay has a sharper rising edge, thus extra shaping circuits are not needed. **Figure 10** shows the measured rising edge and switch node waveforms of the LC and RC delay circuits. The higher gate drive voltage of the LC method could benefit DC/DC converter efficiency. The LC delay method could also help converter efficiency due to the reduced period for body diode conduction.

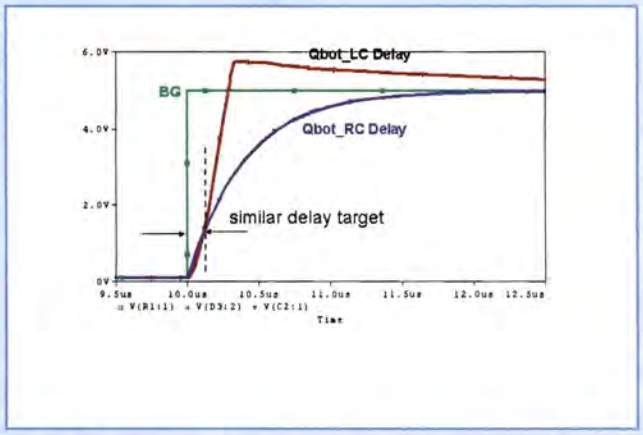

Figure 9: *Simulated rising edge delay waveforms using RC and LC delay circuit*

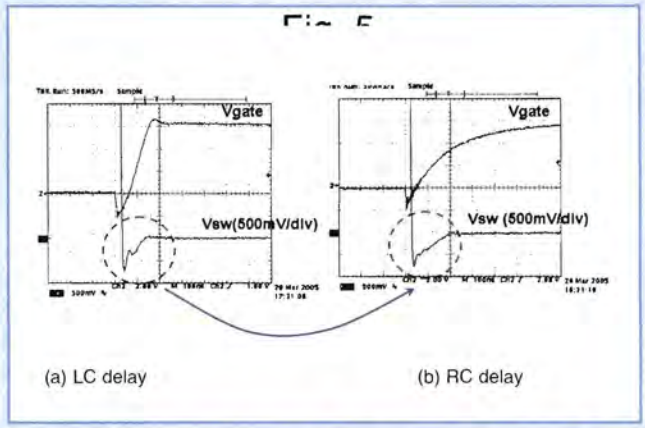

Figure 10: *Experimental rising edge delay waveforms using RC and LC delay circuit show the LC delay will have less diode conduction time*

Win a Microchip PICDEM 4 Demo Board!

Electronics World is offering its readers the chance to win a Microchip PICDEM 4 Demonstration Board. The Demo Board helps engineers to evaluate and demonstrate the advanced capabilities of Microchip's low pin-count PICmicro Flash microcontrollers. PICDEM 4 offers multiple socket options for immediate programming and debugging of 8-, 14-, and 18-pin PIC12F, PIC16F and PIC18F microcontrollers. The board demonstrates many of the features of low pin-count parts, including Local Interconnect Network and motor control capability using the enhanced capture/compare/PWM module. Low-power operation is achieved with a supercapacitor circuit and jumpers allow the on-board hardware to be disabled to eliminate current draw. It also includes provision for crystal, RC or canned oscillator modes and a 5-volt regulator for use with a 9-volt supply, or hooks for a 5-volt, 100mA regulated DC supply. Additional features include an RS-232 interface, an EEPROM footprint, 2 x 16 liquid crystal display, PCB footprints for an H-Bridge motor driver, LIN transceiver, and a connector for programming via In-Circuit Serial Programming technology and developing with the MPLAB ICD 2 in-circuit debugger.

The PICDEM 4 Demonstration Board includes two PICmicro Flash microcontrollers and a CD-ROM containing sample programs, application notes and user guide. The MPLAB ICD 2 is available as a stand-alone unit and Microchip's MPLAB IDE (interactive development environment) software can be downloaded for free from Microchip web site.

For the chance to win a PICDEM 4, log onto **www.microchip-comp.com/ew-picdem4** and enter your details into the online entry form.

No1 Number One Systems

Easy-PC for Windows

The World Beating PCB design software

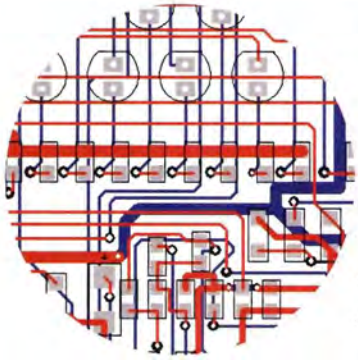

The new Easy-PC reaches even higher!

The breathtaking new Easy-PC for Windows Version 11 is released. Winning accolades the world over, V11 of the market leading Easy-PC delivers even more remarkable value for money and sets the new benchmark for performance in PCB CAD.

STILL FROM ONLY £247 PLUS VAT

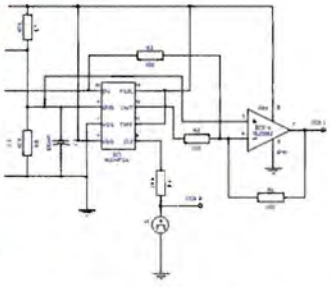

Just try a demonstration copy of Easy-PC and prepare to be amazed...

Easy-PC delivers a simple to understand, fully integrated Schematics & PCB layout in a single application. Design and rules checks at all stages ensure integrity at all times. Professional manufacturing outputs allow you to finish the design process with ease.

Version 11 features

- Design revision analysis
- Star/Delta points
- Apply layout pattern & groups
- Design calculators
- Electrical rules check (ERC)
- Shape editing panel
- Merge/subtract shape editing
- Track analysis

Plus many more exciting features...

Stop press... Stop press... Stop press...
Easy-PC is supported running under Windows Vista

Call for a brochure, prices & CD on +44 (0)1684 773662
or e-mail sales@numberone.com
you can also download a demo from
www.NumberOne.com

Oak Lane, Bredon, Tewkesbury, Glos. GL20 7LR. United Kingdom

25 YEARS 1979 - 2004

Designed for Microsoft® Windows® XP, 2000, ME, 98, Windows NT®

ELECTRONIC CIRCUITS

Fundamentals and Applications

MIKE TOOLEY

NEWNES

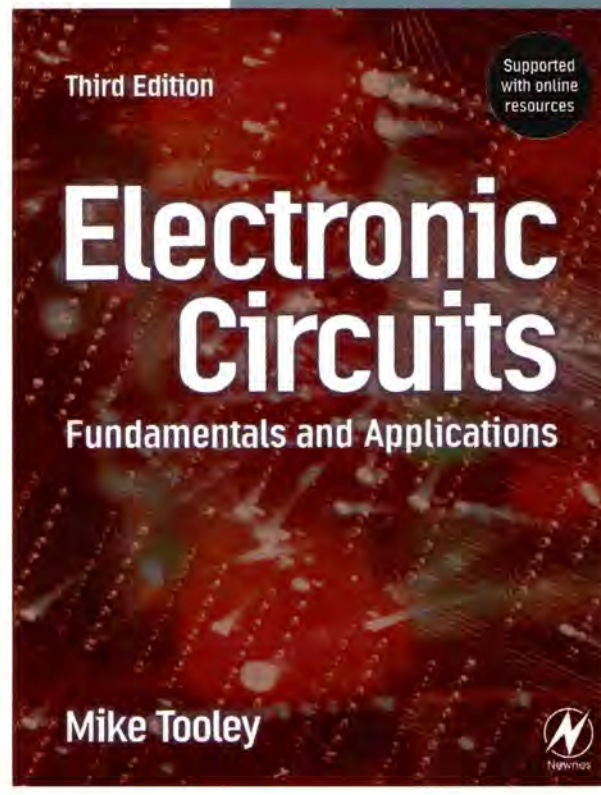

This book is definitely in the highly recommended category. It covers the electronics syllabus from GCSE, through A-level to HNC, and is still a useful reference work for first-degree level. It forms a worthy precursor to Horowitz & Hill *"The Art of Electronics"* and has a similar easy style.

To fully utilise the book it requires an understanding of maths to A-level; hobbyists will still, however, find the book informative and useful, as it emphasises the practical nature of electronics with practical investigation sections at the end of most chapters.

THIS IS A VERY READABLE BOOK AND ONE THAT I WISH HAD BEEN AROUND IN MY YOUTH; IT'S A WORTHY PRECURSOR TO HOROWITZ & HILL'S *"ART OF ELECTRONICS"*

The sections are logically laid out, with an obligatory safety section at the beginning that was not overdone.

The fundamental passive components and their properties are then described in great detail, something that is missing from other books, and is essential for the student to become comfortable with the building blocks of electronics. The MKS system is used throughout, which eases the calculations, especially in the very good 'magnetics' chapter.

DC circuits then follow as they would in real life, as it is essential to get the circuit "statics" correct before moving to the dynamics, which follows in the next chapter. Having covered passive components, the book moves on to active parts; most modern types are described, along with their characteristics. The concepts of data sheets are introduced here. The author has avoided the trap of too much detail in this section, which would be totally appropriate for this level of book.

The following chapters are, again, in a logical progression of power supplies, amplifiers and oscillators, all with practical investigation sections and with the introduction of integrated components. Logic circuits are introduced next, leading to microprocessors, where there is a good overview, avoiding too great a depth, for which there are many other books available.

The chapter on '555' is probably the most interesting and the easiest way to promote an interest in electronics, as so much can be done with so little; making it is easy for a beginner to produce a working circuit. The chapter on 'Radio' gives a good overview and points to more detailed books on this specialised topic for the student wanting to follow this route.

The next chapters of the book, to my mind, are the sections that set it aside from lesser works. Here, we are introduced to test equipment/measurements and how these instruments operate. This is followed by the faultfinding section (always useful), as most beginners' circuits have minor faults that need to be rectified. Without this advice many people give up on electronics, believing it too difficult.

The readers are now prompted to start their own design career with chapters on sensors, circuit simulation (getting it right without smoke or blowing fuses) and the PIC processor. Circuit simulation is an area to be emphasised as schools are increasingly using it; prices have also fallen to a level at which many hobbyists can now afford them.

The final chapter on circuit construction contains a mine of information on the practicalities of electronics and the pitfalls to avoid. My only minor criticism of the book is that it does not emphasise the use of decoupling caps enough. Many a good circuit has been spoilt by instability.

A comprehensive appendix follows, along with a range of useful web addresses; this is the "support with on-line resources".

Altogether, this is a very readable book and one that I wish had been around in my youth. It's a worthy precursor to *"Art of Electronics"*.

Ed Dinning

Gary Nevison is chairman of the AFDEC RoHS team, board director at Electronics Yorkshire and head of product market strategy at Farnell InOne. As such he is our industry expert who will try and answer any questions that you might have relating to the issues of RoHS, WEEE and REACH. Your questions will be published together with Gary's answers in the following issues of Electronics World.

ROHS
ALL OVER THE WORLD

While RoHS legislation started life in Brussels, it continues to spread around the world in various forms. An ever increasing number of countries are looking at RoHS-style legislation, including Japan, China, South Korea, the US and Canada. Here, we take a look how two smaller, very different countries are approaching RoHS issues.

Australia and Norway are on opposite sides of the globe and very different in many ways, but both have an established electronics sector and trade internationally, so RoHS is an issue to which they must pay attention. Norway has served notice that it intends to prohibit, with a few exceptions, 18 substances from consumer goods. Called ***the "Prohibition on Certain Hazardous Substances in Consumer Products"*** this could well be referred to as "PoHS" due to the passing resemblance to RoHS, which is already up and running in the country. The legislation will only apply to Norway but already there appear to be limited choices for companies exporting to Europe. The message seems to be: either develop PoHS as a standard, as RoHS proved that manufacturers do not want to make unnecessary variants of a product, or simply don't ship to Norway.

The scope of PoHS is much wider than RoHS covering all consumer goods with just a few exceptions. The definition of "consumer" is any product that is intended for consumers or that can reasonably be expected to be used by consumers. This includes items such as clothing, bags, toys etc, but does not apply to food products, food packaging, medical equipment, fertilisers, tobacco, as well as means of transport and associated products such as tyres.

The Norwegian proposal is currently the subject of public consultation. However, it is scheduled to be adopted on December 15th 2007 and come into force as soon as January 1st 2008. It looks to restrict 18 substances with only lead and cadmium in common with generic EU RoHS. Comparing the two, the scope of PoHS is wider and not just confined to electrical and electronic equipment. Maximum concentration values are also more stringent; they are as low as 25ppm at, as in RoHS, homogeneous level. The substances that are of relevance to the electrical and electronic industry include arsenic (Gallium Arsenide devices) various flame retardants, PVC plasticisers, monomers used for polycarbonate, lead and cadmium.

PoHS will be subservient to many existing regulations, including EU RoHS and the Batteries and Accumulators Directive. This means that electrical and electronic products that fall within the scope of EU RoHS do not have to meet the more stringent requirements for lead and cadmium but do on the other 16, non-RoHS substances. Companies selling into Norway may well have to re-source many, if not all certificates of compliance unless they adopted an IPC1752 compliant database in the first place and were able to source the data.

Australia, meanwhile, has performed an impact assessment for local adoption of RoHS. A survey of industry was commissioned via a website. To date the impact assessment results have not been made available publicly, nor is there a policy decision by the government. This lack of progress may be due to the key Australian involvement in the World Electronics Forum led dialogue with APEC (Asia Pacific Economic Co-operation) on RoHS harmonisation across APEC. However, the initial meeting in June did not result in a unilateral agreement for an APEC RoHS standard. As a result, it is hoped that the Australian government will publish the impact assessment report shortly and provide industry with a position statement.

Regarding APEC RoHS harmonisation, dialogue is continuing but, as with the European Union, the wheels of the larger bureaucratic machines turn slowly. In general, Australian industry is supportive of the introduction of a RoHS policy providing adequate time is provided for compliance. While it is recognised that compliance costs will be disproportionately higher for small businesses, and compliance may be difficult to establish and enforce, there could well be export benefits for companies complying with RoHS. There is also some concern among design engineers around the reliability issues of using lead-free solders.

The benefits of RoHS are also uncertain as information about the release of hazardous substances from electrical and electronic equipment, and human exposure levels during manufacture, use, disposal and recycling in Australia is limited. However, it is recognised that the hazards posed by heavy metals used in electrical products (e.g. cadmium, chromium, lead and mercury) are well documented.

Please email your questions to:
svetlana.josifovska@stjohnpatrick.com
marking them as RoHS or WEEE

PC18 PRO Compiler Features New Optimisation Technology

The Hi-Tech PIC18 PRO C compiler for the Microchip PIC18 family of microcontrollers, featuring a new compilation technique known as OSG (Omniscient Code Generator), is now available in the UK from Computer Solutions.

Unlike compilers which claim to provide 'global' optimisation but which in reality optimise each individual module separately, OCG partially compiles each module and then completes code generation for all modules together at what would otherwise be known as 'link time'. The result is a substantial reduction in code size, with the additional benefit of allowing the code generator to automatically make many decisions (memory page allocation or pointer allocation, for example) that would otherwise need to be actively managed by the programmer.

The code size reduction achieved by the new system results from a combination of minimised compiled stack size, the 'in-lining' of functions not called by others, minimal register save and restore requirements, the stripping out of code for unused return values and an optimised start-up code. In addition, the sprintf() function only needs to include the formats that will be used.

www.computer-solutions.co.uk

3-Channel LED Driver with PWM Brightness Control

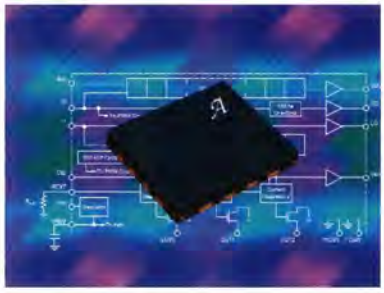

The new A6281 from Allegro MicroSystems Europe is a three-channel constant-current LED driver IC with an on-chip oscillator for simple programmable brightness control. It is ideally suited to driving clusters of red/green/blue (RGB) LEDs in applications where the cluster forms one pixel in a large display or a lighting fixture. It precisely controls LED brightness via 10-bit pulse-width modulation (PWM) on each channel, complemented by 7-bit analogue current control on each channel to adjust colour balance.

The A6281 drives up to 150mA per channel and operates from a supply voltage of up to 17V, which allows series strings of four or more LEDs to be used on each output. An on-chip voltage regulator supplies the internal logic and reduces the number of external components and connections.

Control data is loaded serially, which minimises the number of pins on the device and the package size. Only four control signals are needed: clock, serial data, latch and output enable. These signals are buffered on the chip to drive the next pixel in a daisy-chained cascade. An innovative clock regeneration scheme allows large numbers (hundreds, depending on clock frequency and pixel spacing) of devices to be daisy-chained. Pixel spacing can range up to three metres.

www.allegromicro.com

Amphenol Circular Connectors in New Handbook

International franchised assembling distributor PEI-Genesis has brought out Version 2 of its renowned Amphenol Connector Solutions Guide. The handbook has been completely updated and for the first time includes MIL-DTL-38999 Series I, II and III circular connectors, as well as Amphenol's SJT variant.

In its 280 pages, the handbook presents comprehensive technical information on a total of 12 different series of Amphenol circular connectors, which are widely used in industrial, military and commercial applications. A detailed description of each series is followed by a summary of applications and features, together with full technical specifications, photographs, dimensioned line drawings, details of available accessories, assembly instructions and ordering information.

In addition, this indispensable guide includes a useful connector-series comparison chart, a glossary of terms, conversion tables and a complete part-number index.

To obtain Version 2 of the Amphenol Connector Solutions Guide, go to:

www.peigenesis.com

Low-Cost ZigBee Antennas

CTi Ltd, the specialist antenna manufacturer, has launched two new series of low-cost ZigBee antennas which provide designers with a wide choice of configuration options. Both series of antennas are suitable for use with any IEEE 802.15.4 standard 2.4GHz ZigBee wireless system, and can accommodate vertically and horizontally polarised signals. Typical ZigBee wireless applications include environmental monitoring and control in homes and buildings, and low-speed data acquisition from remote sensors in industrial process control systems.

The CTI-SB series of stubby ZigBee antennas comprises three models, with a choice of straight and right-angle SMA male and SMA male RS connectors. For applications that demand increased signal strength, the slightly longer CTI-RA series of rubber ZigBee antennas provide a gain of up to 9dBi.

The antennas employ co-linear elements, which are contained within a robust, semi-flexible rubber housing, to maximise RF efficiency. They also feature an integral swivel joint to facilitate orientation. The CTI-RA series offers a choice of SMA male RS and TNC male RS connectors.

All CTi ZigBee antennas feature high-quality gold-plated connector pins to ensure signal integrity, have nominal 50-Ohm output impedance and exhibit an output VSWR (Voltage Standing Wave Ratio) of less than 2:1.

www.cti-int.com

New LXI Optical Switching Solution

Pickering Interfaces is expanding its range of LXI compliant switching products with the introduction of the 60-850 and 60-851 optical switching multiplexer.

The 60-850 (single mode) and 60-851 (multimode) offer 8-way and 16-way MUX configurations with a variety of connector options to suit most applications. Other configurations can be provided on request.

The switching system is housed in a compact 1U high form-factor, making it ideal for use in rack-mounted applications. All optical connections are provided on the front panel and include captive dust covers to protect the connectors when they are not in use.

The LXI Class C compliant interface allows the 60-850/1 to be remotely controlled via its Ethernet port through a web browser or by the programmatic interface. Controlling the 60-850/1 through the web even at great distances could not be simpler. The 60-850/1 LXI compliant interface serves up a soft front panel application that allows the user to control the switching matrix without the time consuming installation and configuration of drivers. In addition to Kernel and IVI drivers the 60-850/1 is supplied with an SNMP interface to simplify remote access.

www.pickeringtest.com

High-Performance, 2-Channel Class D Audio Amp Reference Design

International Rectifier (IR) has introduced the IRAUDAMP4 Class D audio power amplifier reference design. Compared to typical circuit designs, the new reference design illustrates how designers can reduce PCB board space by 50% for Class D audio amplifiers for the entire mid-voltage range of mid and high-power amplifiers for home theatre applications, professional amplifiers, musical instruments and car entertainment. Showcasing IR's IRS20955 200V digital audio driver IC and the IRF6645 DirectFET digital audio MOSFETs, the IRAUDAMP4 reference design is a two-channel, 120W half-bridge design offering 96% efficiency at 120W, four ohms. The design incorporates critical protection features such as over-current protection, over-voltage protection, under-voltage protection, DC-protection, and over-temperature protection, in addition to housekeeping functions such as a +/- 5V supply for analogue signal processing for the preamplifier and a +12V supply (Vcc) referenced to -B for the Class D gate driver stage. The two-channel design is scalable for power and a number of channels, and requires no heatsink under normal operating conditions. The IRS20955(S) PbF audio driver IC, on which the reference design is based, features a floating PWM input designed specifically for Class D audio amplifier applications.

www.irf.com

No-Shock Test Fixtures and Enclosures

The risk of an electric shock during product testing is completely eliminated with the latest range of test fixtures and enclosures from electrical safety testing specialist Clare Instruments.

The range enables the operator to carry out the safe and controlled electrical testing of a wide range of products within the production and laboratory environment, complying with the requirements of EN 50191 (Erection and Operation of Electrical Test Equipment). They also meet guidelines laid down by the HSE in its document INDG354 (Safety in Electrical Testing at Working), which follows closely the EN50191 standard.

Power-operated products can be placed within the sealed and protective environment of the enclosure for electrical testing. This avoids direct contact between the product under test and the operator, eliminating the risk of an electric shock.

Manufactured from durable hard-wearing aluminium extruded parts, the enclosures incorporate high impact resistant clear plastic panels, dual safety door switches and facilities for the safe discharge of DC hipot/flash/dielectric post testing.

www.clareinstruments.com

True-Rms Logging Multimeters Featuring TrendCapture

Fluke has announced its new Fluke 287 and Fluke 289 true-rms logging multimeters. They incorporate advanced data logging and TrendCapture to help track down problems faster than before. TrendCapture also helps during preventive and predictive maintenance. An extra-large, quarter-VGA dot matrix display shows results graphically, backed by an enhanced user interface with on-board help (i-info key) and soft-key interface. Both meters can log multiple sessions unattended in the field; these results can then be reviewed without a PC.

The Fluke 287 high-accuracy Logging Multimeter quickly records electrical performance and shows trend information. The Fluke 289 has additional features including a Lo-Pass filter, for accurate voltage and frequency measurements on adjustable speed motor drives and other electrically noisy equipment, as well as Lo-ohms and Lo-impedance measurement ranges. It diagnoses problems in electronics, plant automation, power distribution and electromechanical equipment.

The Fluke 287 and 289 feature a large 50,000-count, $3^{1}/_{2}$ inch display that can show multiple measurement sets. The screen also features a white backlight, and displays context-sensitive on-board help screens. The instrument set-up is customisable to save time and increase productivity.

www.fluke.co.uk

Y-ConJack-31 is a New RJ45 Connector Jack

The Y-ConJack-31 is a new RJ45 connector jack for PCB with integrated magnetic filter, and LED light pipes for the function display. The jack is particularly suited to industrial applications such as industrial Ethernet.

The function principle of the integrated magnetic filter module definitely makes a decisive contribution to the signal conditioning, thanks to the galvanic separation (potential separation) and the additional components. Overlayed disruptions are thus effectively separated or faded out by the wanted signal. Current peaks, highly frequented overlays or electro smog can lead to malfunctions in the applications, particularly in an industrial environment.

The 90°-angled jack for the THR PCB is also fitted with an all-round optimised EMV shielding made of nickel-plated brass.

The two integrated light pipes on the left and right next to the mating face lead the light forwards onto each of the LED light sources mounted onto the PCB, hence emitting a function signal. The colour selection is dependent only on the LED which is used, hence making the jack very flexible for all applications.

www.yamaichi.eu

To reserve your website space phone Matthew Dawe 020 7933 8980
or email matthew.dawe@stjohnpatrick.com

Beta Layout Ltd

www.pcb-pool.com

The Best Value Online PCB Prototyping Service Available:
Instant on line quotations & ordering (no pre registration).
We offer the following:
• No minimum quantity. • No tooling charges. • No drill Limitations. • 1 to 6 layers (prototype quantities) • 2 layers (small production batches) • Fr4,1.6mm,35 um,HASL (Pb free/Rohs/Weee) • Soldermask / Silkscreen (optional) • Leadtimes from 2 -8 working days • Full DRC on all orders (we manually check every file !!!). • PCB-POOL®

accepts direct outputs from 15 major layout softwares (see our website for details)
Download our fully functional PCB LAYOUT software FREE of charge.
Free Phone : 0800 3898560

Sky systems ltd

www.sky-pcb.com

Sky Systems Ltd. was established with the vision and promise of providing manufacturing high quality, cost effective solution and one-stop service to meet the most demanding of our customers' requirements.
We offer the followings:
• 1-12 Layers • Fr-4 / Cem-3 • HAL(Lead Free),Flash Gold, Electroless Gold Plating, OSP ,Immersion Silver, Immersion Tin • Gold Finger • Soldermask • Silkscreen • Routing / Punching / V-Cut • Online quotation • FREE PCB Prototype with quantity orders • Short

lead time • Fast worldwide delivery • Flexible quantity • CHINA Factory
For more information or request a quote today from our web site.

DataQuest Solutions Ltd

www.dqsolutions.co.uk

As specialists in the supply of ultra high-speed instrumentation cards for the PC and industrial chassis, we provide an advanced product range with the following features:
• PCI, PCI-X, PCI-express & PXI formats.
• Signal capture (A/D) with sampling rates up to 500M samples/sec.
• Simultaneous sample and hold with up to 16 bits resolution.
• Waveform generation (D/A) to 125 million samples per second.

• Digital I/O and pattern generation for a wide range of logic levels.
• Storage of data to deep on-board RAM or PC memory.
• Fully portable systems for many types of card.

Surplectronics

www.surplectronics.com

Surplectronics is a brand new electronics components e-Store with a difference. We specialise in popular electronic components from leading manufacturers at rock bottom prices that you won't find elsewhere.
New lines are arriving every day and many of our products are one-off specials that may not be repeated.
Our products are all new, unused and are fully guaranteed. Ordering is simple, with UK shipment free for orders over £50 and

payment is completed credit card. Goods are shipped that day for prompt delivery.
Surplectronics - serious about surplus. Tel: 0870 850 5258

DB Technology

www.dbtechnology.co.uk/

Anechoic chamber and open area test site.
• Compliance Tests
• Fixes included. FCC Listed.
• Flexible hourly booking available.
• Rapid, accurate pre-compliance tests.

Telnet Ltd

www.telnet.uk.com

Suppliers of quality second-user test and measurement equipment at prices you can afford. Manuals and accessories supplied. If you would like a quote, please call. We also purchase your surplus test equipment. Please call us for the best offers.

TELNET
1 Stoney Court, Hotchkiss Way, Binley Industrial Estate, CV3 2RL
Tel: 024 76650702 Fax: 024 76650773

Mobile: 07860 400683
Email: dales@telnet.uk.com

FTT

www.ftt.co.uk/PICProTrng.html

FTT (a Microchip Consultant Partner & Training Partner) has developed a range of courses – both distance learning and instructor led – covering Assembly and C Programming of PIC16, PIC18, PIC24 and dsPIC microcontrollers. For each processor family there are both C and Assembly programming courses at: • FOUNDATION LEVEL & • INTERMEDIATE LEVEL. For information about these courses, advanced courses and workshops such as: • Advanced C Embedded & Real Time Programming • TCP/IP & Ethernet • USB •

CAN • DSP • Motor Control • programming using Real Time Operating Systems such as uCOSII, CMX & Salvo and • other microcontrollers, please inquire.
Tel: 020 8669 0769 Email: pictrng@ftt.co.uk

Microchip Technologies

http://www.microchip.com/

Microchip Technology Inc. is a leading provider of microcontroller and analogue semiconductors, providing low-risk product development, lower total system cost and faster time to market for thousands of diverse customer applications worldwide. Microchip designs, manufactures, and markets a variety of high performance components for high volume, cost-effective embedded control solutions, including 8- and 16-bit PIC® microcontrollers; dsPIC® digital signal

controllers; development kits; serial EEPROMs, more than 350 mixed-signal analogue and interface products; KEELOQ secure data transmission products; and the PowerSmart® family of smart battery management products. Microchip's product solutions feature compact size, integrated functionality, and ease of development.

Colour screen shot and text is just £350 + vat for 12 months

QUASAR electronics

Quasar Electronics Limited
PO Box 6935, Bishops Stortford
CM23 4WP, United Kingdom
Tel: 0870 246 1826
Fax: 0870 460 1045
E-mail: sales@quasarelectronics.com
Web: www.QuasarElectronics.com

All prices INCLUDE 17.5% VAT.
Postage & Packing Options (Up to 2Kg gross weight): **UK Standard 3-7 Day Delivery** - £3.95; **UK Mainland Next Day Delivery** - £8.95; **Europe (EU)** - £6.95; **Rest of World** - £9.95 (up to 0.5Kg).
!Order online for reduced price UK Postage!
Payment: **We accept all major credit/debit cards. Make cheques/PO's payable to Quasar Electronics.**
Call now for our FREE CATALOGUE with details of over 300 kits, projects, modules and publications. Discounts for bulk quantities.

08717 Credit Card Sales 177 168

Ho! Ho! Ho! Christmas 2007 is on it's way
BUT DON'T PANIC!!
We have some fantastic gift ideas for young (and old) enquiring minds

Electronic Project Labs

An electronics course in a box! All assume no previous knowledge and require NO solder. See website for full details

30 in ONE - £16.95
Order Code EPL030KT

130 in ONE - £39.95
Order Code EPL130KT

300 in ONE - £59.95
Order Code EPL300KT

500 in ONE - £149.95
Order Code EPL500KT

Robot Sensor - £19.95
Order Code EPLR20KT

Digital Recording Laboratory - £29.95
Order Code EPLDRKT

Solderless Electronic Project Kits

AM-FM Radio Kit - £6.95
Order Code ERKAFKT

Short Wave Kit - £6.95
Order Code ERKSWKT

Crystal Radio Kit - £6.95
Order Code ERKCKT

Electronic Bell - £8.95
Order Code EAKEBKT

Electronic Motor - £8.95
Order Code EAKEMKT

Generator - £8.95
Order Code EAKEGKT

Room Alarm - £4.95
Order Code EAKRAKT

Hand Held Metal Detector - £9.95
Order Code ELMDX7KT

Metal Detector - £9.95
Order Code ELMDKT

Mechanical Motorised Wooden Kits

Future engineers can learn about the operation of transmissions steered through gears or pulleys. Easy to build, no glue or soldering required.

Automech - £12.95
Order Code C21-605KT

Coptermech - £12.95
Order Code C21-604KT

Trainmech - £12.95
Order Code C21-606KT

Robomech - £12.95
Order Code C21-603KT

Stegomech - £12.95
Order Code C21-602KT

Tyrannomech - £12.95
Order Code C21-601KT

Festive Electronic Project Kits

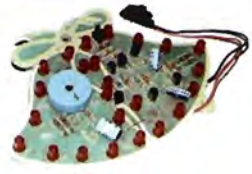

Musical LED Jingle Bells - £17.95
Order Code 1176KT

Flashing LED Christmas Tree - £6.95
Order Code 4080KT

See our website for even more great gift ideas!

No.1 FOR KITS

www.QuasarElectronics.com

Secure Online Ordering Facilities • Full Product Listing, Descriptions & Photos • Kit Documentation & Software Downloads

ADVERTISING ENQUIRIES CONTACT MATTHEW ON: 020 7933 8980

ADVERTISING

EMC ADVERTISING GIFTS
1064 High Road, London, N20 0YY
Huge range · All prices · Quick delivery

20 cm 8 inch RULER CALCULATOR
print 1 colour 100 @ £2.75 each.
500 @ £2.25 each.

FLIP OPEN CALCULATOR
print 1 colour
100 @ £2.75 each.
500 @ £2.45 each.

EMC ADVERTISING GIFTS
Phone • email for catalogues
tel: 0845 345 1064
sales@emcadgifts.co.uk
FULL CATALOGUE ONLINE
www.emcadgifts.co.uk

PCB DESIGN

Tel: (852) 2111 9428
http://www.sky-pcb.com

PCB MANUFACTURE

RAK Printed Circuit Boards
www.rak.co.uk - data@rak.co.uk
24 Hour Service
Quality Prototype and Small Quantity
Printed Circuits Fast
Single Sided • Double Sided
Multi Layer • PTFE • RoHS Compliant
Silver & Gold • SMD Assembly
Unit 12, Shirehill Industrial Estate, Saffron Walden, Essex CB11 3AQ
Tel: 01799 526227 Fax: 01799 525107

ARTICLED WANTED

TOP PRICES PAID
For all your valves, tubes, semi conductors and ICs.
Langrex Supplies Limited
1 Mayo Road, Croydon, Surrey CR0 2QP
TEL: 020 8684 1166 FAX: 020 8684 3056

BATTERIES/CHARGERS

ANSMANN energy

ANSMANN ENERGY (UK) LIMITED
Units 19/20, Maple Park, Essex Road,
Hoddesdon, Herts, EN11 0EX, UK
Tel: +44 (0) 870 609 2233
Fax: +44 (0) 870 609 2234
Email: info@ansmann.co.uk
Web: www.ansmann.co.uk

FOR SALE

agar Circuits
Super Fast Service
PCB DESIGN & MANUFACTURE
for both the Hobbyist and Professional
PCBs designed and produced from :
• Notes • Schematics • Specifications
• Descriptions • Print - outs • Gerbers
Available With or *without* component assembly
* FREE * PCB PROTOTYPE With Quantity Orders
Email: adinfo@agarciruits.com
Tel: 028 (90) 738 897

COMPONENTS WANTED

Components wanted
Excess/Surplus
www.mushroom.co.uk
01234 363611
will collect anywhere in Europe
Instant Cash Settlement

POWER

TOROIDAL TRANSFORMERS
- Product Range 10va - 6kva
- Short Lead Times
- Large or Short Production Runs
- Very Fast Prototype Service
- All products manufactured in UK

TIGER TOROIDS LTD
Unit 5 Pulham Market Hall,
Station Road, Pulham Market
Diss, Norfolk, IP21 4XF
Tel: 01379 608 868
Fax: 01379 608 871

DEVICE PROGRAMMING SERVICES

action circuits
(UK) LIMITED
device programming & reeling specialists

SMD TAPING & REELING SERVICES
Tel: 00 44 (0)1582 412323
Email: sales@actioncircuits.com
www.actioncircuits.com

PCB MANUFACTURE

PCB MANUFACTURE
VISIT **PCB-VALUE.CO.UK** FOR
- REAL-TIME QUOTES CALCULATOR
- LOW COST, EVEN FOR SMALL QUANTITIES
- A QUALITY SERVICE YOU CAN TRUST
- ON-LINE PURCHASING OPTION
- PCB LAYOUT DESIGN

CIRCUIT TECHNOLOGY LIMITED
UNIT 39, LANSDOWN IND. EST.
CHELTENHAM, GLOS, GL51 8PL
TEL: 01242 587700

ADVERTISING ENQUIRIES CONTACT MATTHEW ON: 020 7933 8980

SERVICES

PCB-POOL®

• Prototypes at a fraction of the cost
• Tooling and setup included
• Industry standard quality
• Any contour

FREE LAYOUT SOFTWARE!

• Follow up Services Runs
• CAM/CAD Consulting
• ONLINE Quotations
• ISO-Approved

FREE

with first order (while stocks last)

Freephone 0800-3898560

Beta LAYOUT

Tel.: +353 (0)61 701170
Fax: +353 (0)61 701164
sales@beta-layout.com

WWW.PCB-POOL.COM

TRANSFORMER MANUFACTURE

AUTOMATIC windings Ltd.

NEW

Our new East European production plant for medium to high volume production is now fully operational.

We are pleased to offer an end to end solution for wire wound components Via a UK based company

D2, 4 Nimrod Way, East Dorset Trade Park, Wimborne Dorset, BH21 7SH.
Tel: 01 202 87 21 01 Fax: 01 202 87 20 87
E-Mail: sales@automatic-windings.co.uk
Web: www.automatic-windings.co.uk

FOR SALE

Agilent/HP3561A
Dynamic Signal Analyser
£1600.00 Inc. VAT
Excellent working Order
Good Cosmetic Condition
Operator & Service Manual
90 Day Warranty

Tel: +44(0)1454 315432
Email: sales@jelavender.fsnet.co.uk

SURPLUS COMPONENTS FOR SALE

new parts @ surplus prices
www.surplectronics.com

REMOTE MANAGEMENT

Infratec's SpeedUp Partnerprogramme

Infratec AG, a supplier of Rack Monitoring Systems for the control and management of EDP and telecommunication systems, has launched a new SpeedUp Partnerprogramme. The programme offers potentially lucrative conditions and services, but above all it offers the SMS Alarm System which controls both PCs and servers; for instance, in case of damage, an alarm is sent via SMS or via email.

The SpeedUp Partnerprogramme has three categories: Partner, Silver Partner and Gold Partner. Certification depends essentially on training courses relating to the products. In order to achieve the Silver Partner status, training on the Remote Monitoring System and on Power Monitoring Products is required. The Gold Partner status can be obtained once training on NMS 1000 software for general control is undertaken.

Competent Partners can give suitable advice to their clients and thus sell Infratec products.

Infratec range of products includes individual components and complete solutions for the range of KVM switches, KVM extender, cabinet monitors and even power distribution units and serial console servers.

INFRATEC

Infratec Pro
KW7A Industrial Estate
Corradino PLA3000
Malta
Tel: +356 (0) 21 663 900
Telefax: +356 (0) 21 663 783
E-Mail: info@infratec-ag.de

www.infratec-ag.de

PROTEUS DESIGN SUITE

TIME FOR A CHANGE ?

NEW IN DESIGN SUITE 7:

NEW: Redesigned User Interface includes modeless selection, modeless wiring and intuitive operation to maximise speed and ease of use.

NEW: Design Explorer provides easy navigation, design inspection tools and cross-probing support to improve quality assurance and assist with fault finding.

NEW: 3D Visualisation Engine provides the means to preview boards in the context of a mechanical design prior to physical prototyping.

NEW: Simulation Advisor includes reporting on simulation problems with links to detailed troubleshooting information where appropriate.

NEW: Trace capability within both MCU and peripheral models provides detailed information on system operation which allows for faster debugging of both hardware and software problems.

NEW: Hundreds of new device models including PIC24, LPC2000, network controllers and general purpose electronic components.

Electronic Design From Concept To Completion

Labcenter Electronics www.labcenter.com

Labcenter Electronics Limited
Registered in England 4692454

E-mail: info@labcenter.com Tel: +44 (0) 1756 753440 Fax: +44 (0) 1756 75285

Registered Address: 53-55 Main Street, Grassington, North Yorks, UK, BD23 5AA

development

production

specialised

Whatever your programming needs, you'll find the solution at Dataman

Dataman's next generation programmers are built to meet the demands to support all device technologies and designed to achieve the highest speed of programming required for todays production.

Features...

- USB 2.0 and parallel connectivity
- Universal ZIF socket up to 8 x 48 pins
- Intelligent pin drivers allow varying voltages to be applied to any pin
- Multi-Programming support
- ISP capability with JTAG Interface
- Concurrent and Semi-concurrent gang programming
- Stand-alone operation with touch screen control
- Easy to use software supporting over 34,000 devices
- Free software upgrades and technical support for life of the product
- All goods are ex-stock ready for same day despatch
- 30day money back guarantee (returns during trial period are less than 1%)

from £295+VAT

For over 25 years Dataman have been at the forefront of supplying high quality, reliable programmers and this is maintained by offering up to three years parts and labour warranty on programmers.

DATAMAN

Dataman Programmers Ltd. Station Road
Maiden Newton, Dorset DT2 0AE UK
Tel (01300) 320719 Fax (01300) 321012

www.dataman.com