THE
RADIO CONSTRUCTOR
RADIO · TELEVISION · ELECTRONICS · AUDIO

Vol. 22 No. 1

AUGUST 1968

3/-

A DATA PUBLICATION

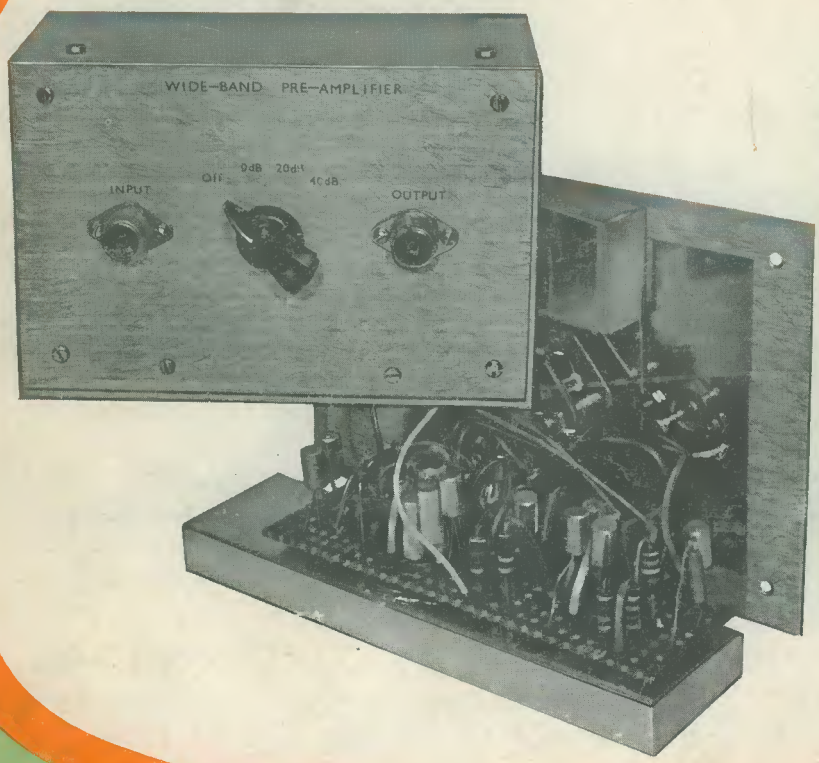

Transistorised Wide-Band Pre-Amplifier

Also featured

S. W. L. Aerial Tuner Unit ★ D C Transistor Tester ★ Snap Action Electronic Timer

www.americanradiohistory.com

Scottish Insurance Corporation Ltd

66–67 CORNHILL · LONDON · EC3

TELEVISION SETS, RECEIVERS AND TRANSMITTERS

Television Sets, Receivers and Short Wave Transmitters are expensive to acquire and you no doubt highly prize your installation. Apart from the value of your Set, you might be held responsible should injury be caused by a fault in the Set, or injury or damage by your Aerial collapsing.

A "Scottish" special policy for Television Sets, Receivers and Short Wave Transmitters provides the following cover:

(*a*) Loss or damage to installation (including in the case of Television Sets the Cathode Ray Tube) by Fire, Explosion, Lightning, Theft or Accidental External Means at any private dwelling-house.

(*b*) (i) Legal Liability for bodily injury to Third Parties or damage to their property arising out of the breakage or collapse of the Aerial Fittings or Mast, or through any defect in the Set. Indemnity £10,000 any one accident.

(ii) Damage to your property or that of your landlord arising out of the breakage or collapse of the Aerial Fittings or Mast, but not exceeding £500.

Why not BE PRUDENT AND INSURE your installation—it is well worthwhile AT THE VERY LOW COST INVOLVED. If you write to the Corporation's Office a proposal will be submitted for completion.

Write for full details, quoting reference 5304, to:—

THE MANAGER

SCOTTISH INSURANCE CORPORATION LTD.,

66–67 CORNHILL, LONDON E.C.3

---

www.americanradiohistory.com

BI-PAK SEMICONDUCTORS

8 Radnor House
93/97 Regent Street
London W.1

KING OF THE PAKS SATISFACTION GUARANTEED
SUPER PAKS—BRAND NEW
Untested Semiconductors

QUALITY-TESTED VALUE PAKS ★ BARGAINS

2 Drift Trans. 2N1225 Germ. PNP 100 Mc/s 10/–
6 Matched Trans. OC44/45/81/81D 10/–
16 Red Spot AF Trans. PNP 10/–
16 White Spot RF Trans. PNP ... 10/–
5 Silicon Rects. 3 A 100–400 PIV ... 10/–
2 10 A Silicon Rects. 100 PIV ... 10/–
2 OC140 Trans. NPN Switching ... 10/–
1 12 A SCR 100 PIV 10/–
3 Sil. Trans. 2S303 PNP 10/–
4 Zener Diodes 250mW 3–12V ... 10/–
3 200 Mc/s Sil. Trans. NPN BSY26/27 10/–
3 Zener Diodes 400mW 33V 5% Tol. 10/–
4 High Current Trans. OC42 Eqvt. ... 10/–
2 Power Transistors 1 OC26 1 OC35 5/–
5 Silicon Rects. 400 PIV 250mA ... 10/–
4 OC75 Transistors Mullard Type ... 10/–
1 Power Trans. OC20 100V 10/–
4 OA202 Sil. Diodes Sub-min. ... 10/–
2 Low Noise Trans. NPN 2N929/30 10/–
1 Sil. Trans. NPN VCB 100 ZT86 ... 10/–
8 OA81 Diodes 10/–
4 OC72 Transistors Mullard Type ... 10/–
4 OC77 Transistors Mullard Type ... 10/–
5 Metal Alloy Transistors Mat. Type 10/–
4 Sil. Rects. 400 PIV 500mA ... 10/–
5 GET884 Trans. Eqvt. OC44 ... 10/–
5 GET883 Trans. Eqvt. OC45 ... 10/–
2 2N708 Sil. Trans. 300 Mc/s NPN ... 10/–
5 GT41/45 Germ. Trans. PNP Eqvt. OC71 ... ... 10/–
3 GT31 LF Low Noise Germ. Trans. PNP 10/–
6 IN914 Sil. Diodes 75 PIV 75mA ... 10/–
8 OA95 Germ. Diodes Sub-min. 10/–
3 NPN Germ. Trans. NKT773 Eqvt. AC130 ... ... 10/–
2 OC22 Power Trans. Germ. ... 10/–
2 OC25 Power Trans. Germ. ... 10/–
2 OC73 Mullard Trans. 10/–
4 AC128 Trans. PNP High Gain ... 10/–
2 AC127/128 Comp. pair PNP/NPN 10/–
3 2N1307 PNP Switching Trans. ... 10/–
7 CG62H Germ. Diodes Eqvt. OA71 10/–
3 AF116 Mullard Type Trans. ... 10/–
12 Assorted Germ. Diodes Marked ... 10/–
4 AC126 Germ. PNP Trans. ... 10/–
1 ORP61 Photo-conductive cell ... 10/–

4 Silicon Rects. 100 PIV 750mA ... 10/–
3 AF117 Trans. Mullard Type ... 10/–
7 OC81 Type Trans. 10/–
3 OC171 Trans. Mullard Type ... 10/–
3 2N2926 Sil. Epoxy Trans. 10/–
7 OC71 Type Trans. 10/–
25 Trans. Heatsinks fit TO18, TO11 ... 10/–
2 2S701 Sil. Trans. Texas 10/–
3 12 Volt Zeners 400mW 10/–
2 10 A 600 PIV Sil. Rects. IS425R ... 10/–
3 BC108 Sil. NPN High Gain Trans. 15/–
1 2N910 NPN Sil. Trans. VCB100 80 Mc/s 15/–
2 1000 PIV Sil. Rect. 1.5 A RS310 AF 15/–
3 BSY95A Sil. Trans. NPN 200 Mc/s 15/–
3 OC200 Sil. Trans. Mullard ... 15/–
2 Sil. Power Rects. BYZ13 ... ... 15/–
1 Sil. Power Trans. NPN100 Mc/s TK201A 15/–
6 Zener Diodes 3–15V Sub-min. ... 15/–
1 2N1132 PNP Epitaxial Planar Sil. Trans. 15/–
3 2N697 Epitaxial Planar Trans. Sil. 15/–
4 Germ. Power Trans. Eqvt. OC16 Mullard 15/–
1 Unijunction Trans. 2N2646 ... 15/–
2 Sil. Trans. 200 Mc/s 60Vcb ZT83/84 15/–
1 Sil. Planar Trans. NPN 100 Mc/s BSY25 ... ... 15/–
1 Tunnel Diode IN3720 (TD5) G.E. ... 15/–
1 Unijunction Trans. 2N2160 TO-5 can G.E. 15/–
2 Sil. Rects. 5 A 400 PIV Stud Type .. 15/–
2 Germ. Power Trans. OC28/29 ... 15/–
1 10 A Sil. Stud Rect. 800 PIV ... 15/–
1 Tunnel Diode AEY11 1050 Mc/s STC 15/–
2 2N2712 Sil. Epoxy Planar HFE225 max. 15/–
6 BY 100 Type Sil. Rects. 20/–
25 Sil and Germ. Trans. Mixed, all marked New 30/–
10 New Power Trans. GEC replaces OC16/26/28 ... ... 30/–
4 OA10 Diodes Mullard 10/–

FREE One 10/– Pack of your own choice free with orders valued £4 or over.

UNIJUNCTION

UT46, Eqvt. 2N2646. Eqvt. T1543. BEN3000

7/6 EACH

SIL. RECTS TESTED

PIV	750mA	3A	10A	30A
50	2/–	3/–	4/6	9/6
100	2/3	3/6	6/–	15/–
200	2/6	4/6	6/6	20/–
300	3/–	4/9	8/–	22/–
400	3/6	6/–	9/–	25/–
500	4/–	6/6	9/6	30/–
600	4/3	7/–	10/–	37/–
800	4/9	8/–	15/–	40/–
1000	6/–	10/–	17 6	50/–

SCR's

LOWEST PRICE LARGEST RANGE

PIV	1AMP	7A	16A	30A
25	—	7/6	—	30/–
50	7/6	8/6	10/6	35/–
100	8/6	10/–	15/–	45/–
200	12/6	15/–	20/–	55/–
300	15/–	20/–	25/–	—
400	17/6	25/–	35/–	80/–
500	30/–	40/–	45/–	95/–
600	—	40/–	50/–	—

CADMIUM CELLS

ORP12, ORP60 8/6 each

PRINTED CIRCUITS

Ex-Computer
Packed with semi-conductors and components. 8 boards give a guaranteed 30 trans. and 30 diodes. Our price 8 boards 10/– Plus 2/– p.p.

INTEGRATED CIRCUITS

Epoxy TO5 8 lead
μL 900 Buffer at 11/–
μL 914 Dual Gate at 11/–
μL 923 J-K Flip Flop at 14/–
IC circuits data, etc. 1/6
Mullard TAA263 Lin Amp 21/–

TESTED DEVICES

AC125	2/3	NKT78		5/6
AC176	5/6	OC44		1/9
AF139	10/–	OC45		1/9
AFZ12	10/–	ST140		3/–
BC107	5/–	ST141		4/–
BC108	5/–	2N696		4/6
BC109	5/–	2N697		5/–
BCY33	5/–	2N1090		4/9
BCY34	6/–	2N1306		4/–
BCZ10	5/–	2N2147		15/–
BCZ11	6/–	2N2894		8/–
BFY50	7/–	2N3819		15/–
BFY51	7/6	2N3820		25/–
BFY52	7/6	2S302		5/–
MAT100	3/–	2S303		4/–
MAT120	3/6	2S304		6/–
NKT773	4/–			

TRANSISTOR MANUAL BY G.E.

CIRCUITS, APPLICATIONS CHARACTERISTICS, THEORY.
647 PAGES

30/– each INC. P.P. 2/6 L.A. S.C.R's G.T. SWITCHES THEORY, RATINGS, APPLICATIONS.

S.C.R. MANUAL BY G.E.

OCP71 8/6 EACH

IMPORTANT NOTICE

WE HAVE NOT CHANGED OUR NAME OR AMALGAMATED WITH ANY OTHER PAK FIRM. YOU CAN ONLY OBTAIN OUR ADVERTISED STOCK BY SENDING TO: *C.W.O. please add 1/– p. & p. Min. Order 10/–*
Bi-PAK SEMICONDUCTORS, 8 RADNOR HOUSE, 93–97 REGENT ST., LONDON, W1

PAK NO.

U1 120 Glass Sub-min General Purpose Germanium Diodes ... 10/–
U2 60 Mixed Germanium Transistors AF/RF 10/–
U3 75 Germanium Gold Bonded Diodes Sub-min Sim. OA5, OA47 10/–
U4 40 Germanium Transistors like OC81, AC128 ... ... 10/–
U5 60 200mA Sub-min Sil. Diodes ... 10/–
U6 40 Silicon Planar Transistors NPN Sim. BSY95A, 2N706 ... ... 10/–
U7 16 Silicon Rectifiers Top-Hat 750mA Vltg. Range 0–1000 ... 10/–
U8 50 Silicon Planar Diodes DO-7 Glass 250mA Sim. OA200/202 ... 10/–
U9 20 Mixed Volts 1 Watt Zener Diodes 10/–
U10 20 BAY50 charge storage Diodes DO-7 Glass 10/–
U11 30 PNP Silicon Planar Transistors TO-5 Sim. 2N1132 ... ... 10/–
U12 12 Silicon Rectifiers Epoxy 500-mA up to 800 PIV 10/–
U13 30 PNP-NPN Sil. Transistors OC200 & 2S104 ... ... 10/–
U14 150 Mixed Silicon and Germanium Diodes 10/–
U15 30 NPN Silicon Planar Transistors TO-5 Sim. BFY50, 2N697 10/–
U16 10 3 Amp Silicon Rectifiers Stud Type up to 1000 PIV 10/–
U17 30 Germanium PNP AF Transistors TO-5 like ACY17-22 ... 10/–
U18 8 6 Amp Silicon Rectifiers BYZ13 Type up to 600 PIV 10/–
U19 30 Silicon NPN Transistors like BC108 ... ... 10/–
U20 12 1.5 Amp Silicon Rectifiers Top Hat up to 1000 PIV 10/–
U21 30 AF. Germanium Alloy Transistors 2G300 Series & OC71 ... 10/–
U22 10 1 Amp Glass Min. Silicon Rectifiers High Volts 10/–
U23 30 MADT's like MAT Series PNP Transistors 10/–
U24 20 Germanium 1 Amp Rectifiers GJM Series up to 300 PIV ... 10/–
U25 25 300 Mc/s NPN Silicon Transistors 2N708, BSY27 ... ... 10/–
U26 30 Fast Switching Silicon Diodes like IN914 Micro-Min. 10/–
U27 12 NPN Germanium AF Transistors TO-1 like AC217 ... ... 10/–
U28 Experimenters Assortment of Integrated Circuits, Untested. Consisting of Gates, Flip-Flops, Buffers, Registers, etc. in Flat-Pack & Dual-in-Line, 8 Assorted Pieces 20/–

Code No.'s mentioned above are given as a guide to the type of device in the Pak. The devices themselves are normally unmarked.

THE RADIO CONSTRUCTOR

ANNUAL SUBSCRIPTIONS to this magazine

may be obtained direct from the publishers

ONLY 42/– per year, post free

Please send remittance with name and address and commencing issue required to:

DATA PUBLICATIONS LTD 57 MAIDA VALE LONDON W9

www.americanradiohistory.com

NEW! PORTABLE SOLID-STATE VOM

A thousand and one uses . . . plus lowest cost

IM–17 **Kit £12.10.0** pp 4/6

Solid state circuitry FET input. 4 Silicon transistor, 1 diode. 4 A.C. voltage ranges. 4 d.c. voltage ranges. 4 ohm ranges. 11M ohm input d.c. 1M ohm input on a.c. 4½in. 200μA meter. Battery powered. Rugged Polypropylene case, self cover and handle. Space for storage of test leads. Easy circuit board construction.

Just right for the householder, hobbyist, boaters, model builders. Amateur radio den, sophisticated enough for the radio and TV service engineer. Does hundreds of everyday measurements at low cost. Battery powered so will work anywhere.

LATEST! PORTABLE STEREO RECORD PLAYER, SRP-1

Kit £28.6.0 incl. P.T. p.p. 10/6

Ready-to-Use £35.4.0 incl. P.T. p.p. 10/6

Automatic playing of 16, 33, 45 and 78 rpm records. All transistor—cool instant operation. Dual LP/78 stylus. Plays mono or stereo records. Suitcase portability. Detachable speaker enclosure for best stereo effect. Two 8in x 5in. special loudspeakers. For 220-250V a.c. mains operation. Overall cabinet size 15⅞ x 3⅞ x 10¼in.

Compact, economical stereo and mono record playing for the whole Family—plays anything from the Beatles to Bartok. All solid-state circuitry gives room filling volume.

Heathkit DAYSTROM

ENJOY YOURSELF AND SAVE MONEY
HEATHKIT for Britain's Best in Electronic kits

INSTRUMENTS

3″ LOW-PRICED SERVICE OSCILLOSCOPE. Model OS-2. Compact size 5″ x 7⅞″ x 12″ deep. Wt. only 9¾lb. "Y" bandwidth 2Hz-3MHz ±3dB. Sensitivity 100mV/cm. T/B 20Hz-200kHz in four ranges, fitted mu-metal CRT Shield. Modern functional styling.

Kit £23.18.0 Ready-to-Use £31.18.0 p.p. 9/-

OS-2

5″ GEN-PURPOSE OSCILLOSCOPE. Model 10-12U. An outstanding model with professional specification and styling. "Y" bandwidth 3Hz–4.5 MHz +3dB. T/B 10 Hz–500 kHz.

Kit £35.17.6 Ready-to-Use £45.15.0 p.p. 10/6

DE LUXE LARGE-SCALE VALVE VOLTMETER. Model IM-13U. Circuit and specification based on the well-known model V-7A but with many worth-while refinements. 6″ Ernest Turner meter. Unique gimbal bracket allows operation of instrument in many positions. Modern styling.

Kit £18.18.0 Ready-to-Use £26.18.0 p.p. 7/6

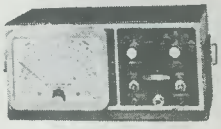

IM-13U

AUDIO SIGNAL GENERATOR. Model AG-9U. 10 Hz to 100 kHz, switch selected. Distortion less than 0·1%, 10V sine wave output metered in volts and dB's.

Kit £23.15.0 Ready-to-Use £31.15.0 p.p. 7/6

V-7A

VALVE VOLTMETER. Model V-7AU. 7 voltage ranges d.c. volts to 1,500. A.c. to 1,500 r.m.s. and 4,000 peak to peak. Resistance 0.1Ω to 1,000MΩ with internal battery. D.c. input resistance 11MΩ. dB measurement, has centre-zero scale. Complete with test prods, leads and standardising battery. Kit £13.18.6 Ready-to-Use £19.18.6 p.p. 4/6

RF-1U

MULTIMETER. Model MM-1U. Ranges 0–1.5V to 1,500V a.c. and d.c.; 150μA to 15A d.c.; 0.2Ω to 20MΩ. 4½″ 50μA meter.

Kit £12.18.0 Ready-to-Use £18.11.6 p.p. 4/6

R.F. SIGNAL GENERATOR Model RF-1U. Up to 100 MHz fundamental and and 200 MHz on harmonics. Up to 100mV output.

Kit £13.18.0 Rdy-to-Use £20.8.0 p.p. 6/–

SINE/SQUARE GENERATOR Model IG-82U. Freq. range 20 Hz-1 MHz in 5 bands less than 0.5% sine wave dist. less than 0.15μ sec. sq. wave rise time.

Kit £25.15.0

Rdy-to-Use £37.15.0 p.p. 10/6

VISIT THE HEATHKIT CENTRES

GLOUCESTER Bristol Road Tel. 29451

LONDON 233 Tottenham Ct. Rd. Tel. 01-636 7349

BIRMINGHAM 17-18 St. Martin Hse, Bull Ring Tel. 021-643 4386

Complete your motoring pleasure with this outstanding CAR RADIO, Model CR-1

Will give you superb LW and MW entertainment wherever you drive. Tastefully styled to harmonise with any car colour scheme. Available for your convenience in two separate parts, RF Amp. Kit £1.15.0 incl. P.T. IF/AF Amp. Kit £11.3.6.

Total Price Kit (excl. Loudspeaker) **£12.18.6** incl. P.T. p.p. 9/6. 8″ x 5″ Loudspeaker £1.16.1 incl. P.T.

TRANSISTOR RADIOS

OXFORD LUXURY PORTABLE. Model UXR-2. Specially designed for use as a domestic or personal portable receiver. Covers L. and M. Wave bands. 7 transistor, 3 diode, circuit. 7″ x 4″ loudspeaker for big set sound. Heathkit now offer choice of Brown or Black real leather case. Excellent value at only Kit £15.10.0 inc. P.T. p.p. 6/-

UXR-2

TRANSISTOR PORTABLE, Model UXR-1. Now available in modern colours or real leather case. 6 Transistor, 1 diode circuit for reliability. Pre-aligned I.F. transformers. Covers L.W. and M. Wave bands. 7″ x 4″ loudspeaker for generous sound. Case available in colours Navy Blue, Coral Pink, Lime Green or Brown Real Leather. Please state second choice. Kit £12.8.0 Colour incl. P.T. p.p. 4/6. Kit £13.8.0 Real leather incl. P.T. p.p. 4/6.

UXR-1

STEREO TRANSISTOR FM TUNER

(Mono version also available)

14 transistor, 5 diode circuit. Tuning range 88–108 MHz. Designed to match the AA-22U Amplifier. Available in separate units, can be built for a total price.

TFM-IS Kit (Stereo £25.2.6 incl. P.T. p.p. 6/–

TFM-1M Kit (Mono) £21.3.6 incl. P.T. p.p. 6/–

Cabinet extra £2.5.0.

FM Tuner

SEE HOW EASY-IT-IS TO BUILD ANY HEATHKIT MODEL YOURSELF

Full details of manual only purchase scheme in latest catalogue. Remember all Heathkit models are fully guaranteed.

www.americanradiohistory.com

LATEST! STEREO AMPLIFIER, TSA–12

12 × 12 watts output.

Kit £30.10.0 *less cabinet* p.p. 10/6

Cabinet £2.5.0 extra

Ready-to-Use **£38.0.0** incl. cabinet p.p. 10/6

FOR THIS SPECIFICATION

● 17 transistors, 6 diode circuit ● ±1dB, 16 to 50,000 Hz at 12 watts per channel into 8 ohms ● Output suitable for 8 or 15 ohm loudspeakers ● 3 stereo inputs for Gram, Radio and Aux. ● Modern low silhouette styling ● Attractive aluminium, golden anodised front panel ● Handsome assembled and finished walnut veneered cabinet available ● Matches Heathkit models TFM-1 and AFM-2 transistor tuners.

Full range power . . . over extremely wide frequency range. Special transformerless output circuitry. Adequately heat-sinked power transistors for cool operation—long life. 6 position source switch.

FULL SPECIFICATION SHEET AVAILABLE

LATEST! STEREO TAPE RECORDER, STR–1

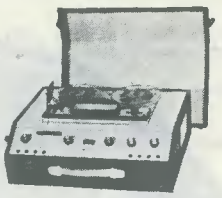

Fully portable—own speakers

Kit £58.0.0 incl. P.T. p.p. 10/6

Ready-to-Use **£70.6.0** incl. P.T. p.p. 10/6

FOR THIS SPECIFICATION

● ¼ track stereo or mono record and playback at 7½, 3¾ and 1⅞ ips ● Sound-on-sound and sound-with-sound capabilities ● Stereo record, stereo playback, mono record and playback on either channel ● 18 transistor circuit for cool, instant and dependable operation ● Moving coil record level indicator ● Digital counter with thumbwheel zero reset ● Stereo microphone and auxiliary inputs and controls, speaker/headphone and external amplifier outputs . . . front panel mounted for easy access ● Push-button controls for operational modes ● Built-in stereo power amplifier giving 4 watts rms per channel ● Two high efficiency 8″ x 5″ speakers ● Operates on 230V a.c. supply.

Versatile recording facilities. So easy to build—so easy to use.

FULL SPECIFICATION SHEET AVAILABLE

WORLD LEADER IN QUALITY KITSETS

The instruction manual shows you how to build the model.

Heathkit DAYSTROM

SHORTWAVE 4 BAND RECEIVER, GR–64E

Offers you the exciting world of Shortwave

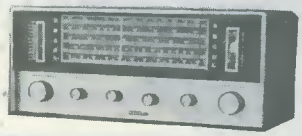

Covers 550 kHz to 30 MHz incl. broadcast plus 3 SW bands. 4 valve superhet circuit plus 2 silicon rectifiers. Own 5″ speaker. Illuminated 7″ slide-rule dial with logging scale. Signal strength indicator. Variable BFO control. Built in AM rod antenna. Circuit Board construction. Headphone jack. Attractive charcoal grey cabinet with black dial panel with green/white markings. Assemble in a few hours. Hear live broadcasts from around the Globe.

Kit **£22.9.0** pp 9/–. Ready to use **£29.9.0** pp 9/–.

SPEAKER SYSTEMS

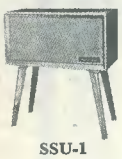

SSU-1

HI-FI SPEAKER SYSTEM, Model SSU-1 Ducted-port bass reflex cabinet in the white: Two speakers, vertical or horizontal models with legs, **KIT £12.14.6**, p.p. 7/6 without legs, **KIT £12.0.0** incl. P.T. p.p. 7/6

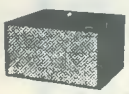

AVON MINI SPEAKER SYSTEM

6½″ Bass, 3¾″ Treble speakers and crossover unit. Kit **£5.2.0** incl. P.T. Beautiful Walnut veneered fully-finished cabinet, **£8.18.0**, Total price Kit **£14.0.0** incl. P.T. p.p. 10/6

"AMATEUR" EQUIPMENT

THE "MOHICAN" GENERAL COVERAGE RECEIVER. Model GC-1U. With 4 piezo-electric transfilters, variable tuned B.F.O. and Zener diode stabiliser, this is an excellent fully transistorised general purpose receiver for Amateur and Short wave listeners. Printed circuits, telescopic aerial, tuning meter and large slide-rule dial. Kit **£37.17.6** Ready-to-Use **£45.17.6** p.p. 10/6

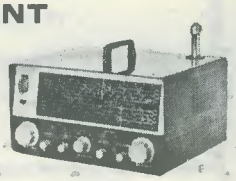

GC-1U

AMATEUR BANDS RECEIVER. Model RA-1. To cover all the Amateur Bands from 160–10 metres. Many special features, including: half-lattice crystal filter; 8 valves; signal strength "S" meter; tuned R.F. Amp. stage. Kit **£39.6.6** Ready-to-Use **£52.10.0** p.p. 9/–

RA-1

160-10M TRANSMITTER. Model DX-100U. Careful design has achieved high performance and stability. Completely self-contained. Kit **£81.10.0** Ready-to-Use **£106.15.0** p.p. 19/6

COMMUNICATIONS TYPE RECEIVER. Model RG-1. A high performance, low cost receiver for the discriminating listener. Frequency coverage: 600 kHz 1.5 MHz and 1.7 MHz–32 MHz.

Kit **£39.16.0** Ready-to-Use **£53.0.0**

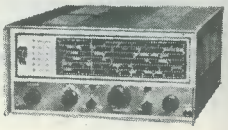

RG-1

HEATHKIT

FREE! CATALOGUE

Describes these and many more kits and ready-to-use models for Stereo/Hi-Fi, Domestic Radio, Record Players, Tape Recorder, Amateur Radio, Short-wave, Test, Educational, Home and Hobby. Save money with Heathkit models. Mail coupon or write to Daystrom Ltd., Gloucester. Tel: 29451.

DAYSTROM LTD., Dept. RC-8
GLOUCESTER Tel. 29451

☐ Enclosed is £_____, plus packing and carriage.

Please send model (s) _____

☐ Please send FREE Heathkit Catalogue.

Name _____
(Please Print)

Address _____

City _____

Prices and specifications subject to change without notice.

www.americanradiohistory.com

Happy Families

These are the times when Simon and Clare know that it has all been worthwhile. But they know too that such moments of happiness are only complete when there is also a feeling of security for the future. And Simon's "Family Unit" Policy with the "Yorkshire" guarantees them *all* a future – if the worst should happen.

Happiness in *your* family too—but for how long? If you or *your wife* should die, how would the rest of the family fare? A Yorkshire "Family Unit" policy provides for both these eventualities in a comprehensive way at a sensible premium. Just ask for a leaflet at your local "Yorkshire" branch and then see the manager. He'll be glad to tell you why . . .

it's YORKSHIRE for INSURANCE

THE YORKSHIRE INSURANCE COMPANY LIMITED

Chief Offices: Rougier Street, YORK
and Becket House, 36-37 Old Jewry, LONDON, E.C.2.

Branches and Agencies throughout the world

Please send me details of the Family Unit Policy, without obligation.

Name.....

Address.....

.....

J.B.

www.americanradiohistory.com

THE MODERN BOOK CO

Amateur Radio Circuits Book. Pub. Radio Soc. of Gt. Britain. **10s. 6d.** *Postage 9d.*

Colour Television. Pal System. By G. N. Patchett. **40s.** *Postage 1s.*

Pick Ups the Key to Hi-Fi. By J. Walton. **12s. 6d.** *Postage 6d.*

Rapid Servicing of Transistor Equipment. By G. J. King. **30s.** *Postage 1s.*

Radio & Electronic Handbook. By G. R. Wilding. **17s. 6d.** *Postage 1s.*

Aerial Handbook. By G. A. Briggs & R. S. Roberts. **15s.** *Postage 1s.*

Stereo Handbook. By G. W. Schanz. **16s.** *Postage 1s.*

A Guide to Amateur Radio. Pub. Radio Soc. of Gt. Britain. **6s.** *Postage 9d.*

Systematic Electronic Fault Diagnosis. By T. H. Wingate. **17s. 6d.** *Postage 1s.*

The Radio Amateur's Handbook. By A.R.R.L. 1968 ed. **45s.** *Postage 4s.*

The Philips Tape Recording Book. By F. Purves. **19s. 6d.** *Postage 1s.*

Radio Yearbook, 1968. Henslow. **15s.** *Postage 1s.*

Hi Fi Year Book, 1967/8. 15s. *Postage 1s.*

Practical Television Circuits. Pub. Newnes. **30s.** *Postage 1s.*

Practical Wireless Circuits. Pub. Newnes. **17s. 6d.** *Postage 1s.*

World Radio TV Handbook. 1968 ed. **42s.** *Postage 1s.*

Electronic Organ for the Home Constructor. A. Douglas. **20s.** *Postage 1s.*

Transistor Electronic Organs for the Amateur. By A. Douglas & S. Astley. **18s.** *Postage 1s.*

We have the Finest Selection of English and American Radio Books in the Country

19-21 PRAED STREET (Dept RC) LONDON W2

Telephone PADdington 4185

TRANSISTORS EX STOCK

AC107	14/6	BTY87-150R	23/-	OC205	10·6
AC127	6/-			OC206	10/6
AC128	4/-	BYZ10	11/-	ORP12	9/-
AC176	6/-	BYZ12	7/6	ORP60	8/-
AD140	12/-	BYZ13	5/-	OA5	3/-
AD149	11/-	GET102	5/4	OA47	1/6
AD161	7/6	GET103	4/4	OA70	1/6
AD162	7/6	GET573	10/-	OA79	1/6
ACY17	5/-	OA73	1/6	OA81	1/6
ACY20	3/6	OC19	5/-	OA85	1/6
ACY21	4/-	OC20	33/-	OA90	1/6
ACY22	2/6	OC22	13/-	OA91	1/6
AFZ11	10/-	OC23	25/-	OA95	1/6
AFZ12	11/9	OC24	19/-	OA200	2/-
AFI14	4/9	OC25	7/-	OA202	2/-
AFI15	4/9	OC26	12/-	2N3819	11/-
AFI16	4/9	OC28	12/-	2N3826	6/-
AFI17	4/9	OC29	15/-	ADT140	12/6
AFI86	12/-	OC35	9/6	STI40	3/-
AF239	12/-	OC36	13/-	STI41	5/-
ASY26	5/-	OC41	3/6	MATI00	7/9
ASY28	5/-	OC42	4/-	MATI01	8/6
ASZ21	4/-	OC43	4/-	MATI20	7/9
ASY29	6/6	OC44	3/-	MATI21	8/6
BAI15	2/6	OC45	3/-	TAA263	19/-
BCI07	4/3	OC71	3/-	2N3528	19/-
BCI08	4/3	OC72	4/6	2N2926	3/-
BCI09	4/3	OC73	3/-	2N2646	10/-
BCY10	20/-	OC75	5/-	2N2160	14/9
BCY12	22/-	OC76	3/-	2N1302	5/-
BCY30	7/-	OC81	3/-	2N1303	5/-
BCY31	9/-	OC81D	3/-	2N1304	6/-
BCY32	8/-	OC82	4/6	2N1305	6/-
BCY33	6/-	OC82D	4/3	2N1306	8/-
BCY34	8/-	OC83	3/6	2N1307	8/-
BCY38	19/-	OC123	7/-	2N1308	10·6
BCY40	16/-	OCI39	12/-	2N1309	10·6
BCZ11	10/-	OCI40	12/-	2N2147	17/-
BFY50	6/-	OCI69	6/-	uL914	11/-
BFY51	5/-	OCI70	4/-	uL900	11/-
BFY52	6/-	OCI71	6/-	uL923	14/-
BSX76	3/-	OC200	6/-	2G371	5/-
BTY79-700R	45/6	OC201	10/-	2G374	5/-
		OC203	8/-	NKT403	16/-
		OC204	11/-	OAZ207	7/-
				2N706	4/-

GUARANTEE: All the above-listed semi-conductor devices are Brand New, First Grade, and guaranteed. We will replace at no charge any device found to be faulty. Further: all devices carry the Manufacturer's name or Trade Mark, type number and batch number. We do not offer for sale devices often described as "new and tested" or bearing re-marked type numbers, these often have a short and unreliable life. L.S.T. COMPONENTS.

WE ALSO STOCK:

20 Watt Solid State Amplifier Kit—AF11 at **£8.8.0.** Solid State Pre-Amp for above at **£6.10.3** Complete. Send now for details . . . "S-Dec" Breadboards, **29/6.** ¼ & ½ Watt 5% *Carbon film.* Sub-min Resistors at **4d.** ea. Skeleton Presets at **1/6.** Mullard Sub-Min Electrolytics & Polyester Capacitors. Heat Sink for 2 x OC35, etc., **6/-.** Veroboard—All standard sizes. Aluminium Chassis & Panels. International Rectifier. "Semiconductor Centre" Stockists. Mullard & Fairchild Integrated Circuits. Handbooks of all types. 40 kc/s Tranducers at **£5.18.0** pair with free circuits. "X"-Line Modules—Solid State ready built & tested circuits.

ALL THE ABOVE & MUCH MORE IN OUR NEW 1968 CATALOGUE

PLEASE SEND 1968 CATALOGUE TO:
(Block Capitals)
I ENCLOSE 1/6 STAMPS.

NAME .....

ADDRESS .....

.....

..... RC

www.americanradiohistory.com

Adamin

MODEL 15

MICRO SOLDERING INSTRUMENT

as selected for the DESIGN CENTRE LONDON

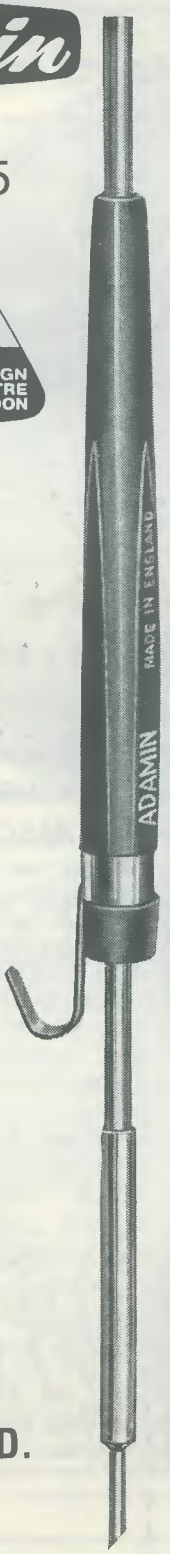

● **EXTREME VERSATILITY**

Range of 8 interchangeable bits, from 3/64″ (.047″) to 3/16″, including new non-wearing PERMATIPS.

● **ULTRA-SMALL SIZE**

Length 7 1/8″. Weight ½ oz. Max. handle dia. 7/16″.

● **EXTRA-HIGH PERFORMANCE**

Heating time 90 secs. Max. bit temp. 390°C. Loading 15 watts—equals normal 30/40 watt iron.

● **ALL VOLTAGES**

The ADAMIN range includes five other models (5, 8, 12, 18 and 24 watts), Thermal strippers (PVC and PTFE) and a De-Soldering Tool. Please ask for colour catalogue A/40.

LIGHT SOLDERING DEVELOPMENTS LTD.

28 Sydenham Road,
Croydon, CR9 2LL
Telephone 01-688 8589 & 4559

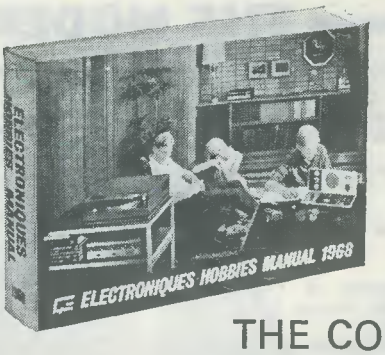

GET THIS 960 PAGES

THE COMPLETELY NEW 1968 ELECTRONIQUES MANUAL

12 HOBBIES SECTIONS PLUS OVER 12,000 COMPONENTS

AND SPECIAL VOUCHER OFFERS COULD SAVE YOU £25 IF YOU BUY THE MANUAL NOW!

The 1968 Hobbies Manual now contains *KNIGHTKITS*— a famous American range of electronic easy-to-build kits. *HALLICRAFTERS*—the Number One name in communication equipment and radios. *BOOKS*—over 140 titles. *AUDIO* and *HI-FI*—a wide, wide range including famous names like Goodman, Sinclair, Sonotone, Acos, Discatron, etc., etc. *HOME AND HOBBY*—something for every member of the family—microscopes, telescopes, radio controlled equipment, garage door openers, experimental and educational kits, etc. *MOTORING*—a special section with money-saving engine tuning kits, radios, seat belts, a car vacuum cleaner and many other useful accessories. *SHORT WAVE LISTENING*—exciting kits and finished equipment for world-wide reception. *TEST EQUIPMENT AND TOOLS*—a very wide range including multimeters, oscilloscopes, signal generators, soldering irons, cutters, pliers, breadboarding kits, etc., etc. *COMPONENTS*—over 12,000 items from more than 100 manufacturers. The most comprehensive range available from a single source—now bigger than ever before. *AMATEUR RADIO*—the best of receivers, transceivers, aerial rotators, aerials, Qoilpax modules and lots more. *ELECTRONIQUES PRODUCTS*—boxes and assembly systems, transistor and valve Hamband and General Coverage tuners, crystal filter I.F. amplifiers, oscillators and other modules for effortless high performance. And finally *SEMICONDUCTORS AND VALVES*—a new section of famous brand names like STC, RCA Newmarket and Brimar.

Enclosed is a cheque/postal order for 16/6 (which includes the 5/- pp) made payable to Electroniques (Prop. STC) Ltd. Please rush me my 960-page copy of the new 1968 Hobbies Manual.

NAME _____

ADDRESS _____

R.C. 2

Send this coupon quoting the special limited-period offer to: Electroniques (Prop. STC) Ltd., Edinburgh Way, Harlow, Essex

electroniques

www.americanradiohistory.com

BI-PRE-PAK LIMITED

TRANSISTORS PRICE

AC107	3/–	OC170	3/-
AC126	2/4	OC171	4/-
AC127	2/4	OC200	3/6
AC128	2/4	OC201	7/–
ACY17	3/–	2G301	2/6
AF114	4/-	2G303	2/6
AF115	3/6	2N711	10/-
AF116	3/6	2N1302-3	4/-
AF117	3/6	2N1304-5	5/-
AF118	3/6	2N1306-7	6/-
AF119	3/6	2N1308-9	8/-
AF186	10/-	2N3844A	5/–
BCZ11	4/6	**Power Transistors**	
BFY50	4/–	OC20	10/-
BSY25	7/6	OC23	10/-
BSY26	3/-	OC25	8/-
BSY27	3/-	OC26	5/-
BSY28	3/-	OC28	7/6
BSY29	3/-	OC35	5/-
BSY95A	3/-	OC36	7/6
OC41	2/6	GP826	30/-
OC44	1/11	2N2287	20/-
OC45	1/9	**Diodes**	
OC71	2/6	AAY42	2/-
OC72	2/6	OA95	2/–
OC73	3/6	OA70	1/9
OC81	2/6	OA79	1/9
OC81D	2/6	OA81	1/9
OC83	4/-	OA73	2/-
OC139	2/6	IN914	1/6
OC140	3/6		

FREE!

PACKS OF YOUR OWN CHOICE UP TO THE VALUE OF 10/- WITH ORDERS OVER £4

EXCITING NEW PAKS

FOR AMATEURS, PROFESSIONALS, FACTORIES, ORGAN BUILDERS, AND THOSE PEOPLE THAT JUST USE LARGE QUANTITIES OF TRANSISTORS.

XA PAK

Germanium PNP type transistors, equivalents to a large part of the OC range, i.e. 44, 45, 71, 72, 81, etc.

PRICE **£5** PER 1000

XB PAK

Silicon TO-18 CAN type transistors NPN/PNP mixed lots, with equivalents to OC200-1, 2N706a, BSY27/29, BSY95A.

PRICE **£5.5.0** PER 500
PRICE **£10** PER 1000

XC PAK

Silicon diodes miniature glass types, finished black with polarity marked, equivalents to OA200, OA202, BAY31-39 and DK10, etc.

PRICE **£5** PER 1000

ALL THE ABOVE UNTESTED PACKS HAVE AN AVERAGE OF 75% OR MORE GOOD SEMICONDUCTORS. FREE PACKS SUSPENDED WITH THESE ORDERS. ORDERS MUST NOT BE LESS THAN THE MINIMUM AMOUNTS QUOTED PER PACK.

P/P **2/6** PER PACK (U.K.)

PRE-PAKS

Selection from our lists

No.		Price
B1	50 Unmarked Trans. Untested	- 10/-
B2	4 Photo Cells Inc. Book of Instructions	- 10/-
B6	17 Red Spot AF Transistors	- 10/-
B6A	17 White Spot RF Transistors	- 10/-
B9	1 ORP 12 Light Sensitive Cell	- 9/-
B53	25 Sil. Trans. 400 Mc/s } Brand New	- 10/-
B54	40 „ „ NPN to 5 } Trans Voltage	- 10/-
B55	„ „ NPN To 18 } & Gain Fallouts	- 10/-
B56	„ „ NPN/PNP } All Tested	- 10/-
B68	10 Top Hat Recs. 750 M/A 100-800 PIV	- 10/-
B69	20 Diodes. Gld-Bnd. Germ Sil. Planer	- 10/-
B74	5 Gld-Bnd. Diodes. 2-OA9, 3-OA5	- 10/-
B75	3 Comp. Set. 2G371, 2G381, 2G339A	- 10/-
C2	1 Unijunction Transistor 2N2160	- 15/-
C26	3 TEXAS Power Transistors 2S012A	- 15/-
C32	6 Top Hat Recs. IS100 Type	- 15/-
A1	7 Silicon Rectifiers BY100 Type	- 20/-
A3	25 Mixed Marked and Tested Transistors	- 20/-
A21	5 Power Transistors 1-AD149/1-OC26 and 3 others	- 20/-

AND MANY MORE

TRANSISTORS ONLY 1/- EACH

SILICON • PLANAR • N.P.N. • P.N.P.

All these types available

2N929	2N706	2S131	2S103	2N696	2N1613	2S733	BFY10
2S501	2N706A	2S512	2S104	2N697	2N1711	2N726	2S731
2N2411	2N3011	2S102	2N2220	2N1507	2N1893	2N2484	2S732

All tested and guaranteed transistors—unmarked.
Manufacturers over runs for the new PRE-PAK range.

BRAND NEW PAK JUST RELEASED ! ! !

REPLACES OUR VERY POPULAR B39 PAK
Short Lead Components, all Brand New and Factory Marked on 10 Printed Circuit Panels.
Approximately:
80 TRANSISTORS AND DIODES
85 HIGH TOLERANCE RESISTORS
25 VARIOUS CAPACITORS

10/-

Please state when ordering Pak. P.1. 2/6 Post and Packing with this pack.

NEW UNMARKED UNTESTED PAKS

25	BSY95A NPN Silicon	TRANSISTORS 10/-
10	1000 PIV 1 amp. Min. Silicon	DIODES 10/-
25	BSY26-27 NPN Silicon	TRANSISTORS 10/-
10	10 Watt Silicon All Voltages	ZENERS 10/-
25	BFY50-1-2 NPN Silicon	TRANSISTORS 10/-
10	4 amp. Stud. Silicon	RECTIFIERS 10/-
25	BC107-8-9 NPN Silicon	TRANSISTORS 10/-
40	1N914-6 OA200/202 Sub. Min. Silicon	DIODES 10/-
150	Min. Germ. High Quality	DIODES 10/-
25	2N706 A NPN Silicon	TRANSISTORS 10/-

PRE-PAK. N.605 POWER TRANSISTOR EQUIVALENT TO NKT301 **5/- each**

TANTALUM CAPACITORS **4/- each**

Make a Rev. Counter for your Car. The 'TACHO BLOCK'. This encapsulated block will turn any 0-1mA meter into a perfectly linear and accurate rev. counter for any car. State 4 or 6 cylinder. **20/- each**

FREE CATALOGUE AND LISTS for:—

ZENER DIODES
TRANSISTORS, RECTIFIERS
FULL PRE-PAK LISTS
& SUBSTITUTION CHART

MINIMUM ORDER 10/- CASH WITH ORDER PLEASE. Add 1/- post and packing per order. OVERSEAS ADD EXTRA FOR AIRMAIL.

THERE IS ONLY ONE
BI-PRE-PAK LTD
BEWARE OF IMITATIONS

FREE! A WRITTEN GUARANTEE WITH ALL OUR SEMICONDUCTORS

BI-PRE-PAK LTD DEPT. A, 222-224 WEST ROAD, WESTCLIFF-ON-SEA, ESSEX
TELEPHONE: SOUTHEND (0702) 46344

www.americanradiohistory.com

HOME RADIO (Mitcham) LTD., Dept. RC, 187 London Rd., Mitcham CR4 2YQ, Phone: 01-648 3282

THE ELECTRONIC COMPONENTS CATALOGUE THAT SETS THE STANDARD

Used and acclaimed by:-

SCIENTISTS
ENGINEERS
TECHNICIANS
TEACHERS &
STUDENTS

This better-than-ever edition of the famous Home Radio Catalogue is the result of ten years of most careful selecting, compiling and indexing.

Of course, no catalogue is ever really finalised. As soon as we have one edition off the press, our researchers get busy finding out what is the latest and best in the world of Radio and Electronics—ready for the next printing.

This edition is without doubt the finest, most comprehensive we have ever produced—it has 256 pages, over 7,000 items listed, over 1,300 illustrations. It really is a *must* for anyone interested in radio and electronics. With each catalogue we supply our unique Bargain List, a Book Mark giving Electronic Abbreviations, an Order Form and an addressed envelope. All this for only 7/6 plus 3/- post and packing. By the way, every catalogue contains 5 vouchers, each worth 1/- when used as directed. *Send the attached coupon today, with your cheque or P.O. for* 10/6. You'll be glad you did!

Please write your Name and Address in block capitals

Name .....

Address .....

.....

.....

Home Radio (Mitcham) Ltd., Dept. RC, 187 London Rd., Mitcham, CR4 2YQ

www.americanradiohistory.com

THE Radio Constructor

Incorporating THE RADIO AMATEUR

AUGUST 1968

Vol. 22 No. 1

Published Monthly (1st of Month)
First Published 1947

Editorial and Advertising Offices
57 MAIDA VALE LONDON W9

Telephone CUNningham 6141

Telegrams Databux, London

© **Data Publications Ltd., 1968.** Contents may only be reproduced after obtaining prior permission from the Editor. Short abstracts or references are allowable provided acknowledgement of source is given.

Annual Subscription 42s. (U.S.A. and Canada $5) including postage. Remittances should be made payable to "Data Publications Ltd". Overseas readers please pay by cheque or International Money Order.

Queries. We regret that we are unable to answer queries other than those arising from articles appearing in this magazine nor can we advise on modifications to equipment described. Queries should be submitted in writing and accompanied by a stamped addressed envelope for reply.

Correspondence should be addressed to the Editor, Advertising Manager, Subscription Manager or the Publishers as appropriate.

Opinions expressed by contributors are not necessarily those of the Editor or proprietors.

Production.—Lithography.

Aerial Tuner Unit for the S.W.L. 10
by L. Saxham

"Snap Action" Electronic Timer 15
(Suggested Circuit No. 213)
by G. A. French

News and Comment 18

Transistorised Top Band Transmitter 20
by S. G. Wood, G5UJ

Can Anyone Help? 21

DC Transistor Tester 22
by G. W. Short

Pocket Reflex Receiver 24
by Arman Sapciyan

Radio Constructors Date Sheet No. 11 25
(Temperature Conversion Table)

Applications of Rechargeable Cells 28
by A. J. McEvoy

Getting the best from your Oscilloscope, Part 4 30
by D. J. Griffiths

Transistorised Wide-Band Pre-Amplifier 34
by W. Kemp

High-Performance, Double Conversion Communications Receiver, Part 2 41
by R. Murray-Shelley, B.Sc.

Radio Constructors Data Sheet No. 12 43
(Metric Conversion Table)

Recent Publications 44

Understanding Radio (Mixer Valves) 49
by W. G. Morley

In Your Workshop 54

Radio Topics 59
by Recorder

The *Radio Constructor* is printed by Allens Printers (Wales) Ltd., Apex Works, Pontygwindy Industrial Estate, Caerphilly in conjunction with Godfrey Lang Ltd. London Office: Cliffords Inn, Fleet Street, London EC4

www.americanradiohistory.com

Aerial Tuner Unit for the S.W.L.

by
L. SAXHAM

This item of receiver ancillary equipment is simple to construct, inexpensive and efficient. It is intended for connection between any long wire aerial and a communications receiver, whereupon it will provide good matching and maximum transfer of energy over a very wide range of frequencies. Not only does it enhance the strength of the desired signal but it also reduces second channel interference.

THE AERIAL TUNING UNIT ABOUT TO BE DESCRIBED WAS constructed, both as a prototype and in the final form shown here, to enable the writer to obtain maximum efficiency from an end-fed long wire aerial—the type most commonly used by the majority of short wave listeners.

The aerial used at the writer's locations is, perforce, of doubtful efficiency due to space restrictions. The length of "top wire" is 45 feet in an East to West direction, and it couples at one end (the West) to the receiver by a short length of 75Ω coaxial cable with earthed braiding. This fundamental aerial is representative of a half-wave array resonating at a natural frequency of 10.4 Mc/s.

The length of a half-wave in space is derived from the formula

$$\text{Length (ft)} = \frac{492}{\text{f (Mc/s)}}$$

This expression does not, however, represent the length of a half-wave in an aerial wire, as several additional factors have to be taken into account. One of these is due to the thickness of the wire in relation to the length (K factor), whilst the other is a shortening effect due to the capacitance added to the system at the end insulators, and which is known as "end effect". As a result of these points, the length of an aerial resonant at a half-wave is somewhat shorter than the length of a half-wave in space.

For frequencies up to about 30 Mc/s the required length of a half-wave aerial may be calculated, with adequate accuracy for practical purposes, from the following:

$$\text{Length (ft)} = \frac{492 \times 0.95}{\text{f (Mc/s)}} = \frac{468}{\text{f (Mc/s)}}$$

This last equation takes into account K factor and end effect.

An aerial resonating in the half-wave mode at 10.4 Mc/s is not exactly the ideal length for general-purpose short

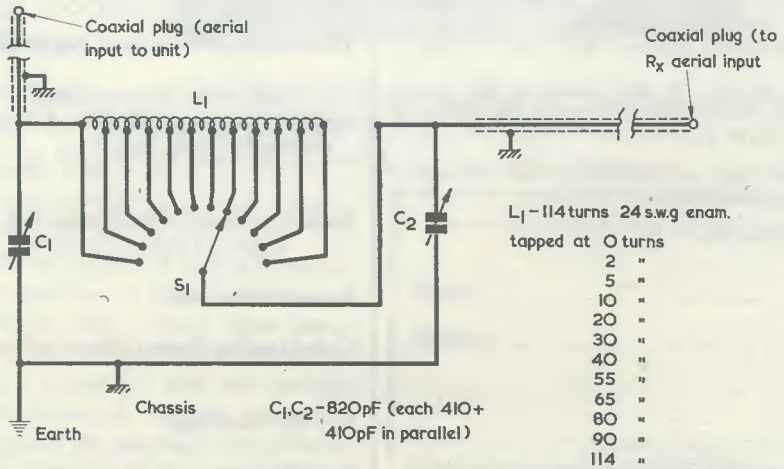

Fig. 1. Circuit of the aerial tuner unit. C_1 and C_2 are each 410pF two-gang components connected in parallel

www.americanradiohistory.com

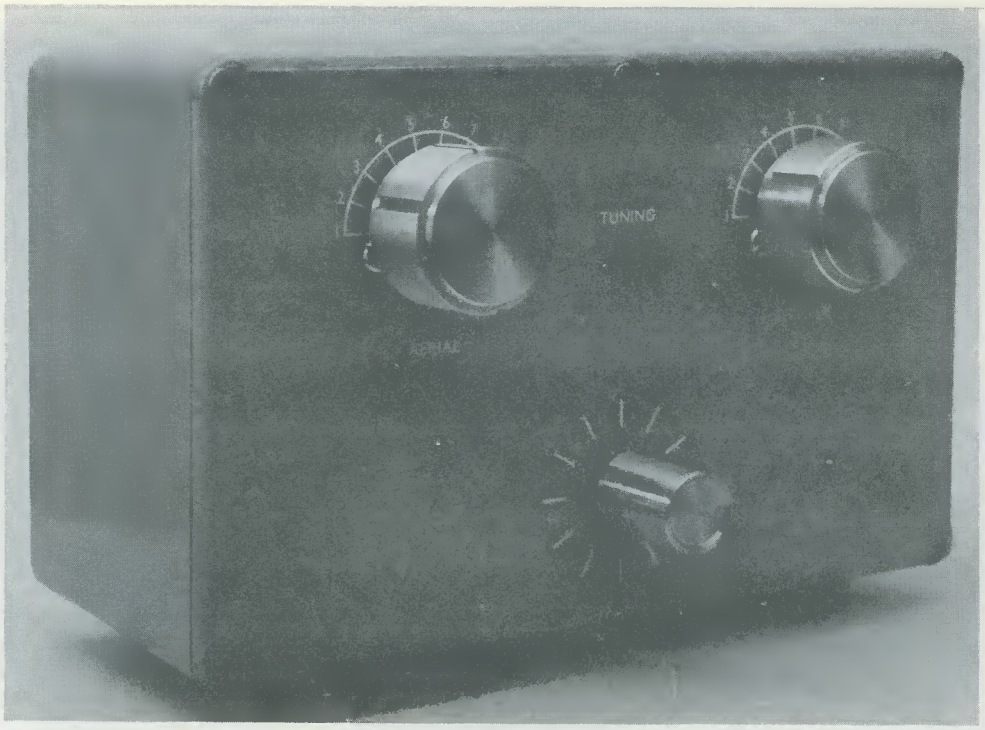

Panel view of the component aerial tuning unit. C_1 is positioned at the top left and C_2 at the top right. S_1 is the remaining control

wave listening over the entire frequency range of 1.6 to 30 Mc/s, especially where the interest lies in both the amateur and the broadcast bands. It merely represents the longest arbitrary length of "top wire" that could be erected in the circumstances prevailing at the writers' QTH.

In order to correct and improve matters, it was decided to construct the simple aerial tuning unit whose circuit is shown in Fig. 1. Although there have been some aerial tuning units available on the surplus market, these were of the rotating inductance type which tend to be rather large and bulky affairs. The unit shown here is much more compact and neat in appearance. It functions by causing the aerial to enter a resonant circuit (not necessarily corresponding to half-wave operation at all frequencies) tuned to the frequency it is desired to receive.

Before proceeding further it should be pointed out that, whilst experience has only been obtained with the writer's own aerial installation, the considerable range of capacitive and inductive adjustment provided in the aerial tuning unit should make it capable of functioning satisfactorily with almost any end-fed long wire aerial. It may be added that, whilst a low frequency minimum of 1.6 Mc/s has just been mentioned, it was found that the prototype

COMPONENTS

Capacitors
2 off 410pF, two-gang, variable, Jackson Bros. type 02, (H. L. Smith & Co. Ltd.)

Wire
24 s.w.g. enamelled

Chassis
$6\frac{1}{2}$ x $2\frac{3}{4}$ x $1\frac{1}{2}$in
(H. L. Smith & Co. Ltd.)

Switch
S_1 1-pole, 12-way
(Home Radio Ltd., Cat. No. WS3)

Panel-Signs Transfers
Sets 3 and 5
(Data Publications Ltd.)

Coilformer
Lantex Tubing, 6in x 1in diameter.
(Home Radio Ltd., Cat. No. ZA24)

Stand-Off Insulators
2 off (Denco type SOI.1—see text)
(Denco Ltd.)

Cabinet
Eddystone Die-Cast Box, type 6357P
(Home Radio Ltd., Cat. No. E903)

Knobs
2 off $1\frac{1}{4}$in Spun Aluminium
1 off $1\frac{1}{16}$in Spun Aluminium
(H. L. Smith & Co. Ltd.)

Cabinet Mounting Feet
4 off, rubber (H. L. Smith & Co. Ltd.)

Miscellaneous
2 off coaxial plugs and 75Ω cable, 4BA x $\frac{1}{4}$in bolts, 4BA washers, solder, etc.

www.americanradiohistory.com

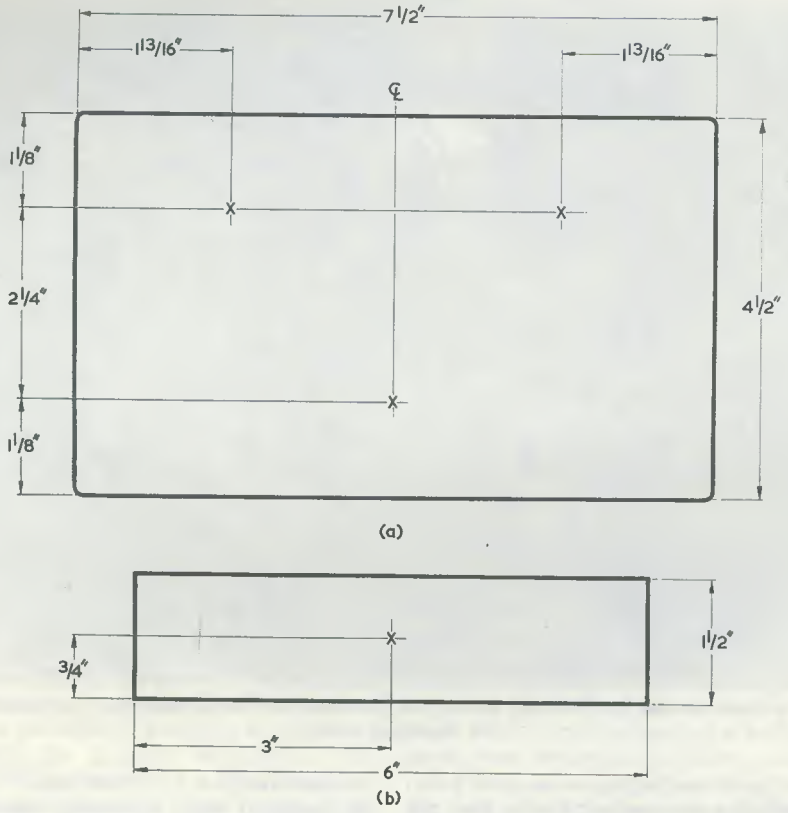

Fig. 2 (a). Drilling details of the die-cast box lid (front panel) and (b) the sub-chassis

tuning unit could resonate the writer's aerial down to frequencies of 550 kc/s and lower, thereby covering all the medium wave band in addition to the short wave bands.

VARIABLE CAPACITOR C_1

The coaxial down lead of the aerial is connected to the junction of C_1 and inductor L_1. C_1 effectively tunes the aerial to earth and, in initial experiments, different values of variable capacitor ranging from 100pF to 820pF (two 410pF in parallel) were tried in this position. Best overall performance was given with the 820pF value and the capacitor specified in the Components List is a 2-gang 410+410pF variable capacitor which fits very comfortably into the die-cast box in which the whole unit is assembled. The fixed vanes of both sections of this 2-gang capacitor are connected together to provide what is, virtually, a single 820pF capacitor.

INDUCTOR L_1

The inductor L_1 is wound on a 6in x 1 in diameter length of Lantex tubing, the winding occupying a total length of approximately 5.4in. The wire used is 24 s.w.g. enamelled copper, a total of 114 turns being wound, spaced one diameter of the wire apart, as described later.

Twelve taps are taken from the inducor to S_1, this being a 1-pole, 12-way switch, the wiper of which is connected to both C_2 and the unit output to the receiver aerial terminal. Variable capacitor C_2 is, like C_1, a panel-mounting 2-gang 410pF component with both sections connected in parallel. The total number of taps provided, and their connection points into the main winding, ensure that the required frequency range is covered, with overlap between taps, by variation of C_2. A short length of coaxial cable connects the unit to the receiver aerial input.

CONSTRUCTION

The unit, once completed, is contained within an Eddystone die-cast box, this providing a completely screened enclosure and obviating signal pick-up by the inductor. The two capacitors C_1 and C_2 are secured to the lid of the box, which now becomes the front panel, by means of two 4BA bolts for each capacitor. The capacitors specified have three 4BA threaded holes in the front of their frames, but it is only necessary to use two, these being those nearest the top of the capacitor (when it is mounted normally). *It is most important to ensure that the mounting bolts do not pass through the front of the capacitor frame sufficiently far to foul the front fixed vanes.* The writer used $\frac{1}{4}$in 4BA bolts, fitting three washers on each between the back of the front panel and the capacitor frame to provide the requisite spacing.

The positions of the capacitor spindle centres are given in Fig. 2 (*a*), and the positions for the corresponding 4BA clear mounting holes may be taken from the components themselves, using these as templates. With the spindle positions shown, adequate space is available for Panel-Signs dials to be affixed to the panel. The capacitors are mounted so that the moving vanes, when open, are

www.americanradiohistory.com

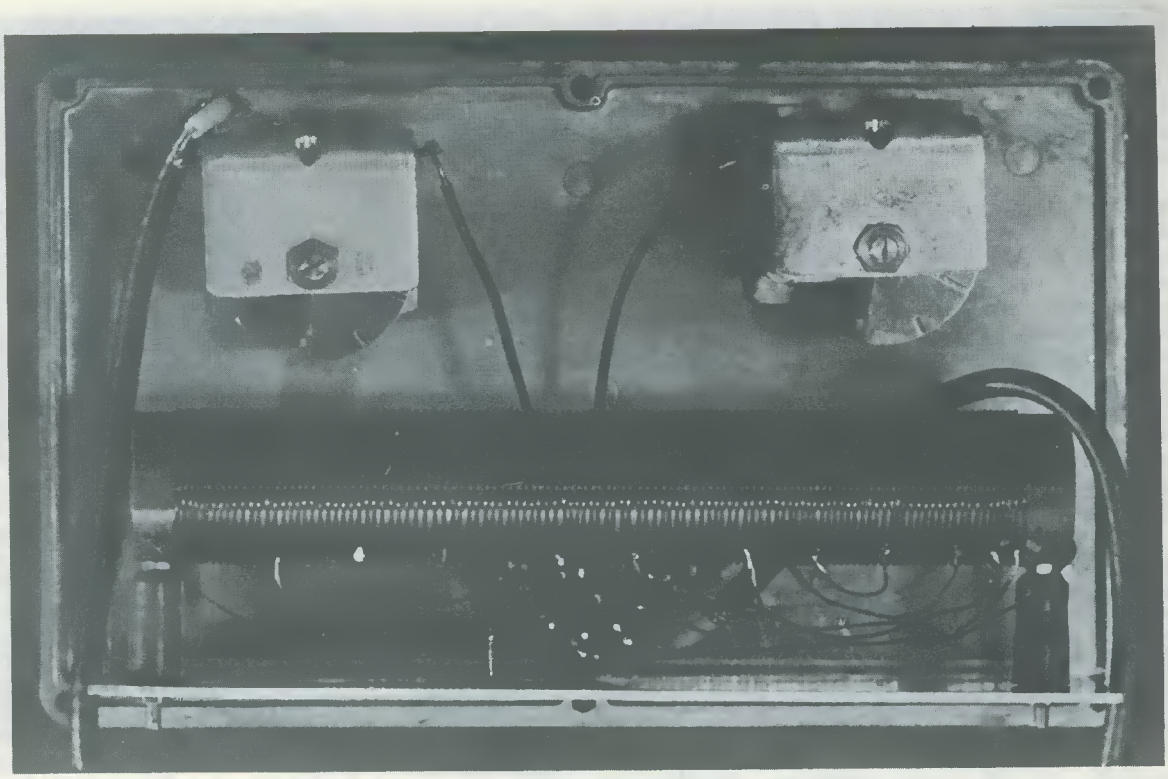

Above-chassis view showing the inductor assembly mounted on the chassis. Note that the chassis is secured to the front panel "upside-down"

nearest the sub-chassis. The capacitor positioning gives adequate clearance between the moving vanes and the coil provided that the latter is mounted on the stand-off insulators specified. If alternative stand-off insulators are employed it may be necessary to alter the capacitor positioning in order to prevent fouling. When final assembly is being carried out, the capacitors should be fitted *after* the inductor.

The inductor is mounted by means of the two stand-off insulators just referred to. These are as quoted in the Components List and are available direct from Denco Ltd., 357 Old Road, Clacton-on-Sea, Essex. The lower ends of the stand-off insulators are secured, at holes $5\frac{1}{2}$in apart, on a small aluminium sub-chassis measuring $6\frac{1}{2}$in long by $2\frac{3}{4}$in wide by $1\frac{1}{2}$in deep. The sub-chassis is L-shaped when viewed from one end and is secured to the front panel by means of the fixing bush of switch S_1, which mounts at the lower of the three holes in Fig. 2 (*a*). A hole is drilled in the centre of the sub-chassis $1\frac{1}{2}$in apron—see Fig. 2 (*b*)—into which S_1 is fitted when securing the sub-chassis to the front-panel. Note that the sub-chassis is mounted into position such that it is "upside-down", i.e. the chassis deck is at the lowest point.

In addition to the holes required in the front panel for C_1, C_2 and S_1, a further two holes are required at the rear of the case for the input and output lengths of coaxial cable.

The box shown in the illustration was firstly drilled and then sprayed with Yukan Self-Spray enamel to the writer's choice of colour, the Panel-Signs being applied to the front panel after construction was completed.

The Lantex tubing should be drilled with a $\frac{3}{32}$in hole at each end of the tube, these being at points $\frac{1}{4}$in from the ends to enable the assembly to be mounted on the stand-off

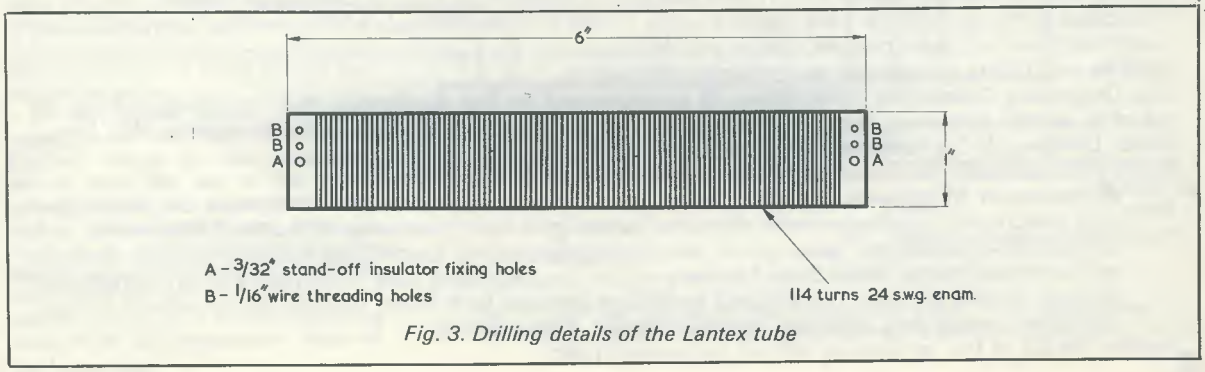

Fig. 3. Drilling details of the Lantex tube

www.americanradiohistory.com

insulators once the winding has been completed. As near to both ends of the tube as possible, and adjacent to the two holes previously drilled, a further two holes should be made (making four in all). These should be of $\frac{1}{16}$in diameter and are used to thread the wire through prior to, and on completion of, the winding process. See Fig. 3.

Wind the wire on to the tube as tightly as possible and space each turn one diameter of the wire apart. The writer discovered that an easy method of winding this coil was to insert into the central hole of the wooden wire reel on which the wire was supplied a length of unwanted potentiometer spindle and to grip one end of this spindle in a vice. It was then found that the potentiometer spindle made a tight fit into the wire reel and the act of turning the Lantex tubing, once the start of the coil had been fed through the two small $\frac{1}{16}$in holes at one end, ensured that the wire wound tightly into the tubing. When the 114 turns have been wound on, cut the wire about 2in from the last turn and pass this end through the remaining two $\frac{1}{16}$in holes at the end of the tubing.

Ensure next that the turns are tightly wound to the tube and evenly spaced and then apply clear Bostik, or some other similar adhesive, down two opposing sides of the coil, stand the tube on one end and allow the adhesive to dry.

TAPPING THE COIL

The coil taps are made at the following number of turns—0, 2, 5, 10, 20, 30, 40, 55, 65, 80, 90 and 114—although, of course, the turns selected is subject to variation by individual constructors according to particular requirements. The tap at the O position has been included to confer the facility of, in effect, switching the aerial straight through to the receiver if required.

The positions on the coil where the taps are required should be carefully scraped with a small-bladed sharp penknife so that the enamel is removed from the visible part of the wire, taking care not to remove the enamel from adjacent turns. These small bared copper points should be tinned with solder, using a small pencil-bit iron.

From the 24 s.w.g. wire left after winding, cut twelve short lengths of wire—about $1\frac{1}{2}$in in length each will suffice. Bare and tin both ends of these lengths and solder one end of each to the prepared tapping points on the winding. Once the coil has been mounted to the sub-chassis, the other ends of these wires should be soldered to the appropriate tags of the switch S_1.

The output coaxial lead from the unit should, preferably, be some four feet or less in length. The braiding of the input coaxial cable is earthed at the frame of C_1, whilst the braiding of the output coaxial cable is earthed at the frame of the switch.

OPERATION

In operation, the writer has found that the best method of using the aerial tuning unit is to set both C_1 and C_2 to their mid-positions and select the tapping which produces the highest signal strength on the S-Meter. Next rotate C_2 for maximum signal, and then adjust C_1. A final slight adjustment of both variable capacitors will ensure that maximum results are achieved.

Whilst it is impossible to predict the results obtained with all aerials and receivers when using the tuning unit, the performance given by the prototype was very satisfactory, a gain of about two S-meter points being apparent with most transmissions when it was brought into operation. It is desirable to have a good earth connection at the receiving site when using the tuning unit.

EDITOR'S NOTE

This is the first of a series of articles describing the construction of various units which are all individually built into Eddystone Die-Cast Boxes. These articles, by the same author, will appear at intervals and the next one is scheduled for publication in the September issue.

EUROPEAN MICROWAVE CONFERENCE,

London, 8–12 September, 1969

The European microwave conference, sponsored by the IEE Electronics Division, the Institution of Electronic and Radio Engineers and the Institute of Electrical and Electronics Engineers (Region 8: Europe, Middle East and North Africa), will be held in London from 8 to 12 September, 1969.

The scope of the conference—the first in Europe to deal comprehensively with the subject of microwaves—will include microwave circuits, design and measurement; microwave antennas, elements and associated devices; solid state microwave devices and applications.

The Organising Committee invite offers of contributions for the conference and intending authors are asked to submit synopses of approximately 500 words to the Joint Conference Secretariat, IEE, Savoy Place, London, W.C.2 not later than 5 January, 1969.

Contributions under the following headings will be particularly welcome:

Advances in Microwave Circuits, including: Microwave networks and integrated circuits; Filters and directional couplers; Ferrite devices; Delay lines and microwave acoustics; Microwave and optical wave-guide and wave-guide components excluding specific applications to long distance telecommunications. Solid State Microwave Devices, including: Low noise receiving and amplifying devices; Power sources; Control and switching devices; Bulk effect devices. Microwave antennas, including: Inertia-less scanning adaptive aerials; Active aerials.

Further details of the conference will be announced later.

www.americanradiohistory.com

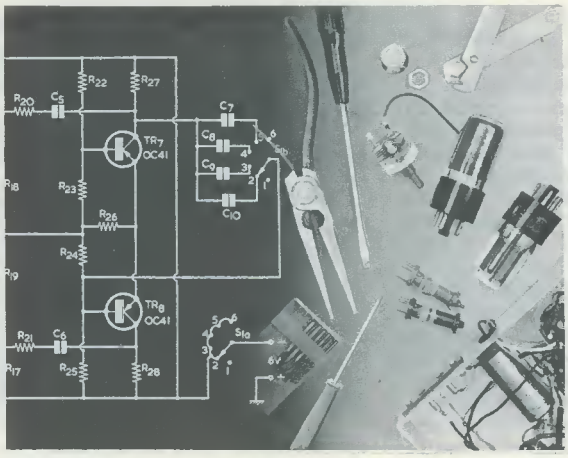

SUGGESTED CIRCUIT No. 213

"SNAP ACTION" ELECTRONIC TIMER

by G. A. FRENCH

THERE HAS ALWAYS BEEN AN INTEREST among amateur constructors in electronic timing equipment, as used for photographic processing and similar applications, and this was made particularly plain to the writer when, some years ago, he devoted several articles in the "Suggested Circuit" series to instruments of this type.

The subject of the present article is also an electronic timer, and it has the distinction of incorporating a somewhat unique feature which is not generally encountered in equipment of this nature. In the normal type of low-cost electronic timer a capacitor is allowed to charge via a resistor, the potential across the capacitor controlling a relay, whose contacts switch the external circuit, by way of an amplifier having a high input resistance. For example, the capacitor potential could be applied to the control grid of a valve, in whose anode circuit is inserted the coil of the relay. Timers of this type tend to suffer from the disadvantage that the energising current in the relay coil changes *gradually* as the capacitor voltage approaches the level corresponding to the end of the timing period, with the result that the length of the period depends to some extent upon the mechanical condition of the relay. If, for instance, it is intended that the relay becomes energised at the end of the period this period will be extended if, due to poor mechanical maintenance, the relay requires a higher current than normal to operate.

In the present design the circuit operation is such that there is no gradual change in relay energising current near the end of the timing period. Instead, the current in the relay coil is kept negligibly low from the moment of starting the period to the instant immediately before its cessation, after which the current in the relay coil changes abruptly to its *full* energising value with no intermediate stage of gradual increase whatsoever. There is, in consequence, no dependence on the mechanical condition of the relay and the timing periods have a much higher degree of accuracy. It is the sudden and virtually instantaneous change in relay current which explains the term "Snap-Action" in the title of this article.

THE CIRCUIT

The circuit of the electronic timer appears in Fig. 1, and it will be seen that it is intended to be powered from the a.c. mains, this being applied to the primary of mains transformer T_1. Transformer T_1 is one of the relatively inexpensive components with 6.3 volt heater and half-wave h.t. windings which are primarily intended for valve equipment, and it lends itself readily for use in the present application. The h.t. secondary should offer a voltage of 230 to 250 volts, this being used for charging the timing capacitor, whilst the 6.3 volt winding is applied to the voltage doubler circuit given by D_3, D_4, C_2, C_3 and limiter resistor R_6. A rectified supply of nominally 12 volts on load then appears across C_2, and is employed for the two transistors TR_1 and TR_2.

The component which allows the timer to exhibit its "snap-action" operation is neon bulb NE_1. This is a

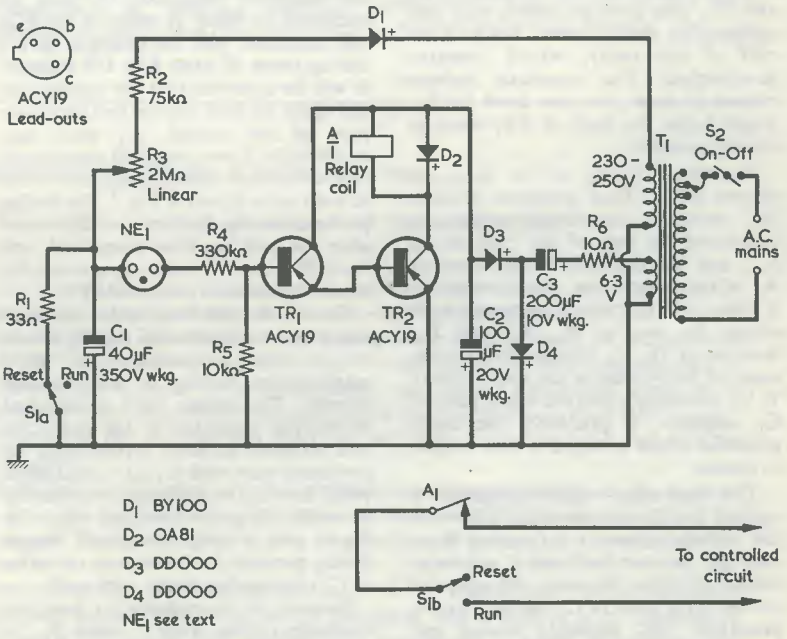

Fig. 1. The full circuit of the snap-action timer. Relay energising current increases dramatically at the end of the timing period

www.americanradiohistory.com

small wire-ended neon bulb which strikes at around 60 volts. It will be noted that it couples via R_4 to the base of TR_1 whose emitter is connected, in turn, to the base of TR_2. The coil of relay A/1 (shown as a rectangle) appears in the collector circuit of TR_2, its normally closed contacts A1 being in series with the external circuit controlled by the timer. Following the usual "detached" method of relay circuit presentation, contacts A1 are drawn separately from the relay coil, and are shown in the de-energised position. Returning to TR_1 and TR_2, these two transistors are high-gain types and the overall current gain from TR_1 base to TR_2 collector is approximately equal to the product of their individual current gains. Thus, it requires only a small forward current at the base of TR_1 for TR_2 to pass sufficient collector current to energise the relay.

Another component which needs to be referred to at this stage is switch $S_{1(a)\,(b)}$. This is a double-pole double-throw toggle switch, one section of which appears in the timing CR circuit whilst the other is in series with the external controlled circuit.

Let us now examine circuit operation before and during a timing period. With $S_{1(a)\,(b)}$ in the "Reset" position, on-off switch S_2 is closed and a 12 volt d.c. supply becomes available across C_2 for the two transistors. Since $S_{1(a)}$ is in the "Reset" position, C_1 is virtually short-circuited and no voltage appears across the capacitor. At the same time, the fact that $S_{1(b)}$ is also in the "Reset" position ensures that there is no circuit path for the external controlled circuit. With the timer in this condition TR_1 and TR_2 pass leakage current only, and a negligibly small current flows in the coil of the relay, which remains de-energised. The transistor leakage current is kept at a low level by R_5, which holds the base of TR_1 close to chassis potential.

To start a timing period, $S_{1(a)\,(b)}$ is thrown to the "Run" position. At once, the external controlled circuit is completed by way of the contacts of $S_{1(b)}$ and the normally closed contacts A1 of the relay. Also, the short-circuit is taken off C_1, which commences to charge by way of R_3, R_2 and D_1. Because of D_1, C_1 charges only during negative half-cycles at the upper end of T_1 h.t. secondary, and the upper plate of C_1 acquires a gradually increasing potential which is negative with respect to chassis.

This increasing negative potential is applied to NE_1 but, provided it is below the striking potential, no current flows through the neon bulb and it acts as an insulator. When, however, the potential on the upper plate of C_1 reaches striking potential, NE_1 suddenly ionises and strikes, and a current flows through the neon bulb, R_4 and the base-emitter junction of TR_1. This current is sufficient to cause TR_2 to bottom, and the relay at once energises. Its normally closed contacts A1 open, the circuit to the external controlled circuit is broken, and the timing period is then completed. To start another timing period $S_{1(a)\,(b)}$ is initially returned to the "Reset" position, whereupon C_1 becomes discharged, the neon bulb extinguishes and the relay de-energises. The timer will then provide a further timing run if $S_{1(a)\,(b)}$ is once more set to the "Run" position.

The most important feature of the circuit operation just described is the abrupt application of full energising current to the relay coil at the end of the timing period. This is entirely due to the presence of NE_1 which, at the instant it strikes, changes dramatically from being an effective insulator to a device capable of passing current.

FURTHER POINTS

Some points in the circuit now require a little further elaboration.

Capacitor C_1 is the timing capacitor, the series timing resistance being given by R_2 and R_3. R_3 gives a variable control over the timing period and offers a range of about 3 seconds to 75 seconds. It is felt that this should be adequate for most timing requirements and no range switching is, in consequence, incorporated in Fig. 1. If, occasionally, a timing period greater than 75 seconds is required, say for a photographic process, then R_3 may be set to a fraction of the required time and the timer made to go through two or more periods per process as required. On the other hand, should longer periods be frequently required, C_1 may be increased in value. A value of 80µF in this capacitor will, for example, give a timing range of some 6 to 150 seconds. It will be apparent that the constructor can apply his own ideas to this particular part of the circuit. C_1 need not, incidentally, have a nominal capacitance of *exactly* 40µF if the timing circuit is to be built up as shown in Fig. 1. The timing performance is subject to calibration after the unit has been completed, and the calibration will take into account the actual capacitance presented by C_1.

Due to the relatively large resistance which can be inserted by R_3, C_1 should be a new component of good manufacture having a low leakage current. The writer used a standard electrolytic capacitor in the prototype and achieved excellent repeatability on continued runs with R_3 set to maximum value. It would be advisable, nevertheless, to avoid using an increased value for R_3 in any attempt to obtain longer timing periods. An increase in the value of C_1 represents a better approach.

Resistor R_1 is included to limit the discharge current from C_1 when $S_{1(a)}$ is returned to "Reset". A following timing period will then have exactly the same length if C_1 is allowed to discharge for about half a second or more before putting $S_{1(a)\,(b)}$ back to "Run" again.

The neon bulb is a small wire-ended component available from Home Radio (Components) Ltd. under Cat. No. PL32A. A suitable alternative is the Hivac type 16L or 34L available from Henry's Radio Ltd.

An interesting point is given by the value specified for R_4. It might at first sight appear that a higher base current in TR_1 would result if this resistor were reduced in value but, in practice, such was not found to be the case. Initially, a resistor of 4.7k *F* was employed in the R_4 position, but the TR_1 base current which resulted was significantly less than that given with R_4 increased to several hundred kilohms. It is possible that the lower value in R_4 caused the generation of a sawtooth oscillation in the neon bulb circuit, whereupon a reduced *average* base current was given, but the writer did not investigate this particular point any further. It was found empirically that a value in R_4 of the order of 330kΩ gave best results.

The relay employed may be any type having a coil resistance of 450Ω or more and an energising voltage of 10 volts or less. The writer used a 500Ω P.O. 3000 relay with two changeover contact sets in the prototype (one contact set being left out of circuit) and this functioned perfectly reliably. Readers who have difficulty in obtaining a suitable relay should note that a 500Ω P.O. 3000 relay with 3 changeover sets is listed in the catalogue of G. W. Smith & Co. (Radio) Ltd., 3 Lisle Street, London, W.C.2, and that this should have the same sensitivity as the component used by the writer if one contact set is removed. G. W. Smith & Co. will, in any event, make up P.O. 3000 relays to customers' specification.

Diode D_2, connected across the relay coil, is in circuit merely to prevent the formation of a high back e.m.f. across the relay coil when, on going to "Reset", NE_1 extinguishes and the relay energising current suddenly ceases. If not suppressed, this high back e.m.f. could cause damage to TR_2. D_2 may be an OA81 or any similar germanium diode. Care must be taken to connect it into circuit with the polarity shown, or TR_2 will pass excessive current.

In the voltage doubler circuit given by D_3 and D_4, capacitors C_2 and C_3 have just sufficient capacitance to ensure that about 12 volts appears across C_2 when a 500Ω relay coil in the collector circuit of TR_2 is energised. If it is found that, due to capacitor tolerances, the rectified voltage across C_2 falls seriously below 12 volts, either C_2 or C_3 may be increased in value as required to bring the rectified voltage up to the desired figure. There was no evidence of any trouble on this score with the prototype, and the writer just mentions the point as a hint to any constructor who finds that he obtains a

www.americanradiohistory.com

low output from the voltage doubler. D_3 and D_4 should be silicon types, such as the Lucas DD000 quoted.

As was mentioned earlier, the mains transformer, T_1, is one of the relatively inexpensive components with heater and half-wave h.t. windings which are readily available in the home-constructor market. Although intended initially for valve equipment, a transformer of this type is of considerable use in the present circuit. Both the secondaries pass currents much lower than would occur in normal usage. The maximum current drawn from the h.t. secondary by the timer circuit of Fig. 1 is only of the order of 4mA, and the current drawn from the 6.3 volt winding is less than 100mA.

A final point concerning components has to do with the resistors. All the fixed resistors may have a rating of $\frac{1}{2}$ watt and a tolerance of 10%. R_3 should be a good quality robust component and not a miniature type.

STABILISED CHARGING SUPPLY

A minor shortcoming with the circuit of Fig. 1 is that the charging voltage available for D_1 varies with fluctuations in mains voltage. The resultant errors in timing periods should not, however, be particularly serious unless the timer is used in locations where there are exceptionally high mains voltage variations.

If desired, the effect of mains voltage variations can be completely eradicated by using the regulator circuit shown in Fig. 2. Instead of connecting direct to R_2, diode D_1 feeds into a 32µF reservoir capacitor and then, via a 6kΩ series resistor, to a stabilising tube type 150C2. The upper end of R_2 now couples to the stabilised voltage provided by this tube.

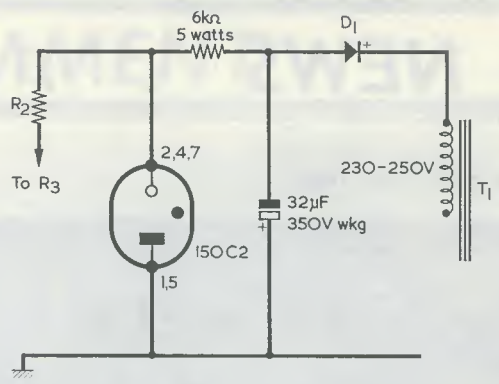

Fig. 2. In locations where there are heavy fluctuations in mains voltage, improved accuracy is given by incorporating a voltage regulator tube

The remainder of the timer circuit is the same as in Fig. 1. With Fig. 2, the current drawn from the h.t. secondary of T_1 is of the order of 25mA.

The writer has not tried the circuit of Fig. 2 in practice and presents it as a possible modification for experimenters who require accurate timing periods despite large mains voltage variations.

CALIBRATION

After the timer has been completed and checked for operation, it is necessary to calibrate resistor R_3. This component must, of course, be mounted on the front panel and fitted with a suitable pointer and scale. If C_1 has been in store for a long time, it will be advisable to have a number of successive timing periods with R_3 inserting maximum resistance to ensure that the capacitor is fully formed before commencing calibration.

Calibration may be carried out with the aid of a stop-watch or, less conveniently, a watch having a second sweep hand. The length of a timing period may be indicated by using a bulb in series with a battery as the controlled circuit, or any similar device. A temporary scale is provided for R_3 and a number of timing runs are then taken, with this potentiometer set at various equally-spaced positions along its travel. These positions are marked on the temporary scale and the length of the corresponding timing run noted. This information may then be drawn up in graph form, and transferred back to a permanent scale for R_3 marked out in seconds and tens of seconds.

TROPOSPHERIC WAVE PROPAGATION

Conference at IEE, Savoy Place, 30 September – 2 October, 1968

The troposphere, the lower part of the atmosphere in which the "weather" takes place, is of major importance in influencing the propagation of electro-magnetic waves shorter than about 10 metres in wave-length—frequencies greater than 30 MHz. This means that tropospheric effects must be considered in relation, for example, to VHF and UHF broadcasting, including television, point-to-point communications operating at such frequencies, including mobile communications, and radar. Although there are a number of problems of overlapping interest, the subject can conveniently be divided into two main parts, concerned on the one hand with propagation within the horizon (line-of-sight transmission) and, on the other, with beyond-the-horizon propagation.

Both these areas will be under review at the conference on tropospheric wave propagation, to be held at the Institution of Electrical Engineers, from 30 September to 2 October, 1968, when individual topics to be discussed will range from the most recent basic research to the evaluation of practical communication problems.

The Chairman of the Organising Committee is Dr. J. A. Saxton, Director of the Radio and Space Research Station, and the event is being sponsored by the IEE Electronics Division, the Institution of Electronic and Radio Engineers and the Institute of Electrical and Electronics Engineers (United Kingdom and Republic of Ireland Section).

The full programme and registration forms for the conference will be available at a later date from the IEE Conference Department, Savoy Place, London, W.C.2., (Tel. 01–240 1871).

www.americanradiohistory.com

NEWS . . . AND .

SINCLAIR SYSTEM 2000

SINCLAIR SYSTEM 2000

The System 2,000 range of high fidelity products offers a fine combination of quality and value for money. Each item in the range uses advanced and reliable components and the methods of production employed ensure that the products will last a lifetime.

The 35 Watt stereo amplifier provides sufficient output power for all but the largest domestic installations and incorporates every feature you are likely to require. If has sufficient sensitivity for any available cartridge and the specifications place it in the first rank of high fidelity amplifiers.

Specifications

Output: 35 Watts R.M.S. total music power. *Load:* 3 to 15 ohms. *Total Harmonic Distortion:* Less than 0.5% at 1 kc/s and full output power or any lower power. *Frequency response:* 15 c/s to 30 kc/s $\pm$1dB at 1 Watt. *Circuit:* 18 transistors (12 silicon and 6 germanium) are used in a completely transformerless circuit. 40dB of negative feedback is applied to the power amplifiers to ensure minimal distortion and very high damping factors. *Construction:* The entire case and all control knobs are solid aluminium; a form of construction which is both elegant and supremely durable. *Power requirements:* 200 to 250 volts a.c. 50 c/s or 60 c/s (100 to 120V a.c. versions are also available and conversion of the 200 to 250V version can be made by a simple internal adjustment).

Inputs and sensitivities

Pickup 1 (Magnetic) 3mV into 68kΩ (R1AA). *Pickup 2 (Ceramic)* 30mV into 220kΩ (R1AA). *Tape 1 ($7\frac{1}{2}$ i.p.s.)* 1.5mV into 100kΩ. *Tape 2 ($3\frac{3}{4}$ i.p.s.)* 1mV into 100kΩ. *Auxiliary* 500mV into 100kΩ. *Radio* 100mV into 100kΩ. *Microphone* 2.5mV into 50kΩ.

Controls

Inputs (as above) selected by push buttons.

Outputs

Switched mains outlet. Tape output (160mV). Speaker terminals. Mains terminals.

Size

12 x 6 x 2 inches (30 x 15 x 5 cms.)

PRICE: 29gns.

LOW COST EDUCATIONAL TV BY SATELLITES

A satellite communications system that could carry educational television to millions of people all over the world, from large cities to remote villages, at a cost of only pennies per year per person has been described by the Hughes Aircraft Company. Hughes developed the Early Bird satellite which last April registered its third anniversary in space.

Mr. Donald Sandler, Manager of Space Systems, Europe, in a paper presented to electronic and design engineers, communications and other specialists, says that the system could be implemented immediately in India, for example, at a cost of about 13 cents per student annually. On a per capita basis, a system suitable for Mexico (which includes both commercial and educational television) would cost less than 10 cents.

Mr. Sandler states that the total cost of the system over a 10-year period, including maintenance and operation, would range from $4,000,000 annually in Mexico to about $12,000,000 a year in India—a fraction of the cost of a comparable system using cable or microwave facilities.

The system's annual cost is predicted upon the number and relative complexity of ground terminals required in each country. Considerably more terminals would be required for India's teeming population of 483,000,000 and 550,000 small villages than for Mexico's 44,000,000 persons and far fewer small communities.

The system, described in a paper on educational TV satellites, would provide for special educational programmes dealing with family planning, health, agriculture and basic school instruction. They would be taped or fed live to a central control point for transmission to the satellite.

In turn, the satellite would relay the information over a specific area to ground aerials ranging in size from 25-feet in diameter for large cities to small 10-feet-diameter aerials used in rural areas and isolated villages.

The Sandler paper points out that previous estimates for the satellite portion of such satellite educational systems included development costs which, in many instances, could not be borne by the developing nation's economy. These problems, he states, have now been overcome by development of a low-cost, spaceproven satellite system powerful enough to work with low-cost ground terminals and much smaller aerials thus enabling less-developed nations to embrace space technology to accelerate social progress.

www.americanradiohistory.com

COMMENT

THE CALIPUTER

Now available in the United Kingdom, an inexpensive measuring and caculating instrument combining the functions of a 4 in vernier caliper, depth gauge and slide rule.

The Caliputer is available in either English or Metric scale. The inch vernier reads to 0.001 in., the metric to 0.02 mm., with readings applicable to both caliper and depth measurements.

When the caliper is used to measure a diameter, the Caliputer gives circumference and cross-section area by direct reading.

Having standard "B", "C" and "D" scales, the slide rule performs all normal multiplication, division, square and square root calculations.

The instrument is made of satin finish stainless steel with scales permanently precesion-etched. It measures $4\frac{3}{4}$ in. long overall and each Caliputer is supplied in a handy pocket-size vinyl plastic scabbard containing detailed instructions for use.

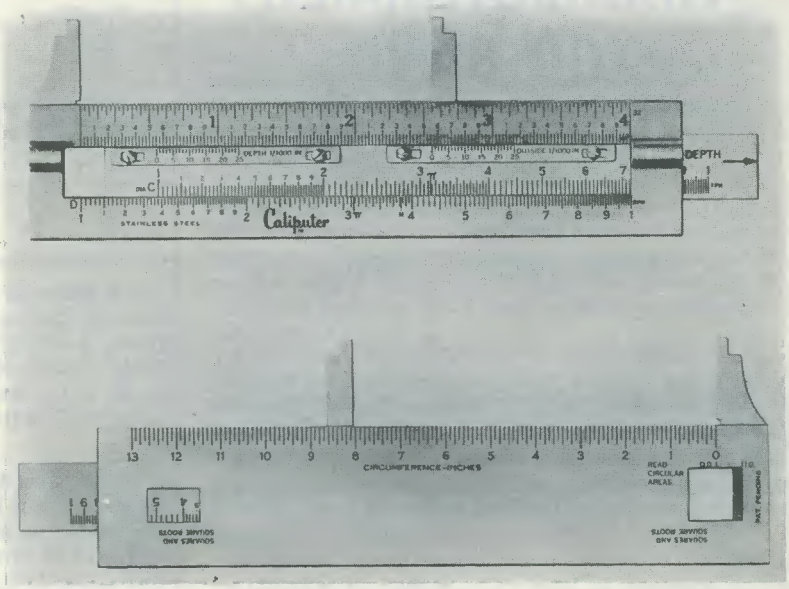

PITY THE STUDENT

"I was told a story yesterday which fits in with complex modern physical theories. A student returned to his college twelve years after he graduated. His professor showed him a physics paper he was marking. The student was amazed, and pointed out that the questions were exactly the same as those he had answered twelve years before. 'That's right', said the Professor, 'but the answers are all different now!' "

EARLY BROADCASTING

"The microphone looked like a meat-safe, and the studio like a padded cell. It was a small room with a low ceiling, heavily curtained walls and a carpeted floor. There were no windows, and absolutely no ventilation. And a large notice warned visitors: 'If you cough, you will deafen thousands.' ".

From a description of the radio station at Leeds in 1924. The two above items were culled from broadcasts in the BBC World Service.

TRANSATLANTIC "KESTRELS"

Of the yachts engaged in this year's "Observer" single-handed race across the Atlantic from Plymouth to Newport, Rhode Island, seven were specially equipped with Marconi Marine "Kestrel" radiotelephones, principally so that they could communicate with newspapers which were publishing regular reports of their progress during the race, or to firms sponsoring their entries.

The winner, Geoffrey Williams, in the *Sir Thomas Lipton*, used a "Kestrel" to send in his reports to the *Daily Telegraph*.

DESIGN ACCOLADE FOR RECENTLY ANNOUNCED GARRARD UNITS

Four of the most recent additions to the Garrard range of record playing units have been accepted for inclusion in the Design Index of the Council of Industrial Design.

The units are Models SL95 and SL75 two of the automatic transcription turntables from the recently announced SL series of units, Model AP75, a high quality single record player, and the stylish Model 2025 TC, a moderately priced auto-turntable. All four units have been introduced on the home market this year, and have already achieved considerable success overseas.

Said Mr. W. Fleming, Garrard Commercial Manager: "Acceptance of any product for the Design Index is on the basis of technical quality as well as functional design, and we are delighted that our continual efforts to raise these standards have received this recognition."

The four new units join another member of the Garrard range in the Design Index. This is the famous Model 401 transcription turntable, which has been listed for several years.

Model AP75, a new single record playing unit introduced by Garrard Engineering Limited and one of four new Garrard record playing units accepted for inclusion in the Design Index of the Council of Industrial Design

www.americanradiohistory.com

TRANSISTORISED TOP BAND TRANSMITTER

by
S. G. WOOD, G5UJ

A simple transistorised c.w. design for QRP operation on 160 metres. Readers are reminded that this transmitter must not be operated without the appropriate Post Office licence.

WITH THE INCREASING POPULARITY OF THE semiconductor in amateur radio circuitry, it is felt that a description of the simple transmitter which forms the subject of this short article will be of interest. The transmitter operates on 160 metres and employs two transistors. Both are 2N3704 n.p.n. types (available from Amatronix, Ltd., 396 Selsdon Road, Croydon, Surrey).

TABLE

COIL DETAILS

Coil	No. of Turns	Wire	Former Dia.	Type of Winding
L_1	90	26 s.w.g. d.s.c.	$\frac{3}{8}$in	Close-wound
L_2	35 (tapped at 10)	22 s.w.g. enamelled	$2\frac{1}{2}$in	Close-wound
L_3	15	22 s.w.g. enamelled	See text	Close-wound

As a glance at the accompanying circuit diagram will show, the line-up consists of a modified Colpitts v.f.o. driving a straightforward p.a. stage. Little difficulty should be encountered in the construction and many, if not all, of the components may be found in the average spares box. The transistors are inexpensive types.

COILS

Basic winding details for the coils are given in the Table. The v.f.o. coil is L_1 and requires no further information than appears in the Table. L_2 is the tank inductance and consists of 35 turns with a tap at 10 turns from the end which connects to RFC_2. L_3, the aerial link coil, is wound over the earthy end of L_2, with a layer of thin paper between the two windings.

The two r.f. chokes are standard components and the Denco RFC.5 (2.6mH) would be suitable. So also would the Eddystone type 1010 (1.25mH).

The three resistors may be half or quarter watt types. R_3, in the emitter circuit of TR_2, is $10\Omega \pm 5\%$, this rather low value being found best after much experimenting.

Capacitors C_2 and C_3 are silver-mica to maintain frequency stability. Apart from C_5, the remaining fixed capacitors may be silver-mica, ceramic, or paper or plastic

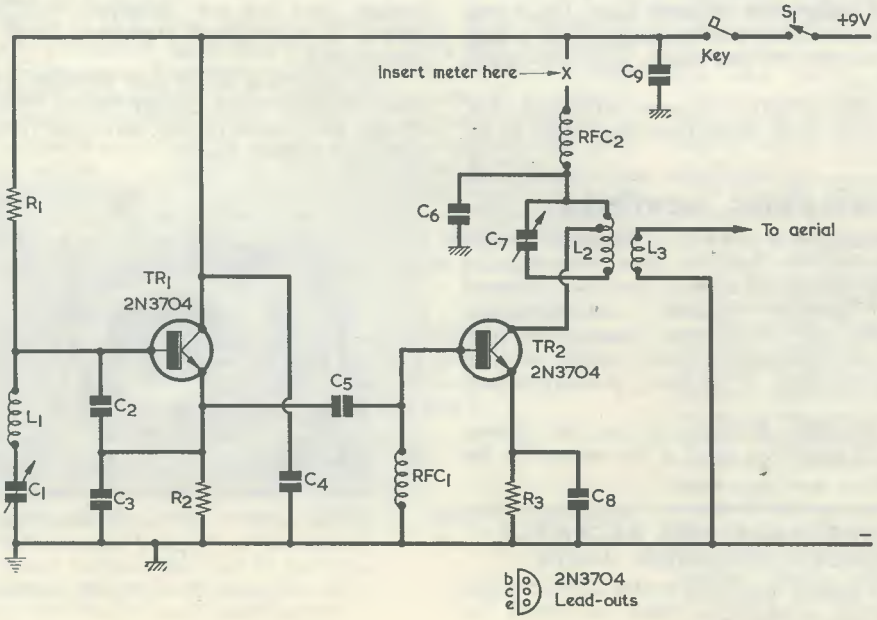

www.americanradiohistory.com

COMPONENTS

Resistors
(Resistors may be $\frac{1}{2}$ or $\frac{1}{4}$ watt)
R_1 22kΩ 10%
R_2 1kΩ 10%
R_3 10Ω 5%

Capacitors
C_1 100pF variable, air-spaced
C_2 0.01μF silver-mica 2%
C_3 680pF silver-mica 2%
C_4 0.01μF
C_5 500pF silver-mica
C_6 0.01μF
C_7 500pF variable, air-spaced
C_8 0.01μF
C_9 0.01μF

Inductors
L_1, L_2, L_3 See text and Table
RFC_1, RFC_2 See text

Transistors
TR_1 2N3704
TR_2 2N3704

Switch
S_1 s.p.s.t. on-off switch

Miscellaneous
0–100mA meter (for tuning—see text)
Key
Slow motion drive (for C_1)
9-volt battery

foil. C_1 series-tunes the v.f.o. coil L_1, and it should be a variable air-spaced component fitted with a slow-motion drive. C_7 is also an air-spaced variable capacitor.

TUNING METER

For tuning purposes, a 0–100mA moving coil meter may be inserted between RFC_2 and the positive supply line, at the point marked with a cross. This meter could be brought into circuit for tuning-up only and need not be a permanent feature of the transmitter if the constructor so desires. It was found that inputs of 400 to 500mW were obtainable, using a standard 9-volt battery.

The transmitter can be keyed by simply inserting the key in either of the supply lines, and there were no signs of "chirp" or any other undesirable feature with the writer's transmitter. In the circuit diagram, the key is shown in the positive supply line. No heat sinks were used for the transistors and there was little or no heating under normal conditions.

An aerial some 66ft. long or even longer, tuned—Marconi fashion—against ground, will give best results, but almost any reasonably long length of wire will resonate and "load-up" with this little rig.

Finally, the actual results obtained on the air with this particular line-up have proved that QRP of 400mW or even less can still push out a 9-plus signal on our QRM infested l.f. bands.

(EDITOR'S NOTE. The maximum dissipation quoted for the 2N3704 is 360mW. TR_2 may in consequence be slightly overrun under the input conditions referred to by the author although, as stated, he experienced no difficulties on this account. Maximum V_{ce} for the transistor is 30 volts.).

CAN ANYONE HELP ?

Requests for information are inserted in this feature free of charge, subject to space being available. Users of this service undertake to acknowledge all letters, etc., received and to reimburse all reasonable expenses incurred by correspondents. Circuits, manuals, service sheets, etc., lent by readers must be returned in good condition within a reasonable period of time

Circuit Required.—R. M. Hudson, c/o P. O. Box 170, Freeport, Grand Bahama, Bahamas – 12V transistorised timer circuit with repeating cycle 30 to 60 seconds on, 10 minutes off. Self starting upon switching on. Has any reader designed such a circuit?

R1355.—D. E. Garner, 52 Culvers Way, Carshalton, Surrey – any information and any suitable and tried modifications.

Data Book Series No. 8.—J. W. Matthews, 27 Grange Park Crescent, Roundhay, Leeds 8 – this book – "Tape and Wire Recording" – is urgently required. Loan or purchase.

Type 13A Oscilloscope.—T. Fisher, 13 Dedmere Road, Marlow, Bucks – manual required, loan or purchase.

Wireless Set No. 18, MkIII.—W. P. Molan, 91 Kimberley Road, Penylan, Cardiff – details of power requirements (h.t., l.t. and grid bias). Any other information on this receiver also of great assistance.

RT-7/APN-1, R-1/ARR-1, BC-993-B.—J. W. Clubb, 38 Clunie Road, Dunfermline, Fife – any information, manuals, circuits, etc.

Power Unit Type 846.—J. Anderson, 4 Institute Walk, East Grinstead, Sussex – circuit diagram, handbook of this unit (Ref. No. 10K/17501 (EHT)). Loan or purchase.

AM Receiver Ref. 10A/12913.—J. Blackmore, 76 Fairmead Crescent, Edgware, Middx – any information on this ex Air Ministry set. Purchase of circuit or manual. Also information on p.s.u. for this unit.

Bendix Receiver RA-1B.—A. Thompson, Thursley Cottage, I Church Road, East Molesey, Surrey – wishes to purchase, or obtain loan of, circuit or manual. Also, any details of modifications.

www.americanradiohistory.com

DC TRANSISTOR TESTER

by
G. W. SHORT

This instrument avoids a common source of error in transistor current amplification measurements. It checks for short-circuits and leakage, measures working base-emitter voltage, and can be used as an aid to designing base-bias circuits.

THE CIRCUIT OF FIG. 1 IS OFTEN USED for measuring the current amplification factor of a transistor. The base bias resistance R_B is adjusted to allow a known base current I_B to flow. The meter neasures the collector current I_C, and the current amplification is I_C/I_B. This is the "d.c. beta" or "large-signal current amplification factor" h_{FE}, which is rapdily becoming the most popular gain parameter in transistor manufacturers' data. It is not usually greatly different from the "a.c. beta" or "small-signal current amplification factor" h_{fe}, and has the advantage of being useful in the design of d.c. biasing circuits as well as indicating the gain at signal frequencies.

The simplest way of testing transistors by means of the circuit of Fig. 1 is to standardise the collector current at some typical value (e.g. 1mA) and calibrate R_B directly in h_{FE}. All that then needs to be done is to plug in a transistor, adjust R_B until the meter reads 1mA, and then read h_{FE} off the scale of R_B.

Unfortunately, this method of measuring h_{FE} is not quite as reliable as it looks. Designers of "beta testers" of the Fig. 1 type and its varieties often overlook a factor which leads to low readings of current gain, especially with silicon transistors.

BASE-EMITTER VOLTAGE

The source of error is the commonly-made assumption that $I_B = V_{CC}/R_B$. This makes no allowance for the fact that a definite base-emitter voltage V_{BE} must be present in order to "turn on" the transistor. The voltage available for driving base current through R_B is therefore not the whole of the supply voltage V_{CC}, but is, instead, V_{CC} minus V_{BE}.

In the case of a small germanium transistor, the working V_{BE} is 0.1 to 0.3V. If only germanium transistors need be checked, it is sufficient to take the mean value 0.2V, and calibrate R_B accordingly. The error in h_{FE} due to *variations* in V_{BE} is then small enough to be neglected for everyday purposes.

If, however, a *silicon* transistor is now plugged into the tester, the calibration of R_B is no longer correct, because of the much greater V_{BE} (0.5 to 0.8V) of silicon devices. The value of h_{FE} shown on the scale of R_B is too low, and the error can be considerable if a low battery voltage is used. To take an extreme but practical case, suppose V_{CC} is supplied by a 1.5V cell. Then, for a germanium transistor, 1.3V is available for driving base current through R_B, while for silicon, assuming an average V_{BE} of 0.7V, there is only 0.8V. If the tester has been calibrated for germanium by allowing 0.2V for V_{BE} then, when a silicon transistor is plugged in, I_B is reduced to 0.8/1.3, or 0.62 of the "germanium" value, and the tester "reads low" by 38%. If no allowance for V_{BE} has been made, the error is 13% for germanium, and 47% for silicon transistors. With higher values of battery voltage the error diminishes, but it is still quite significant at 6V, which is a common test voltage for small transistors.

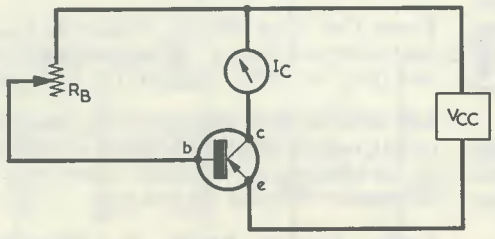

Fig. 1. A simple test set-up for evaluating h_{FE}. A p.n.p. transistor is shown, but the circuit is equally applicable to n.p.n. types

ELIMINATING THE ERROR

One way out of the problem is to provide R_B with two scales, one for silicon and the other for germanium devices. This is a perfectly practical approach, but there is a better alternative which eliminates the error at source and at the same time gives an indication of V_{BE}. (This is useful when transistors have to be matched for class B push-pull amplifiers.).

The system is used in the tester shown in Fig. 2, which forms the subject of this article. The essence of the technique is to add to the voltage which drives current through the base bias resistance an extra voltage which is adjusted to be exactly equal to V_{BE}. This extra voltage compensates for V_{BE} without affecting the calibration of the resistance (R_2) which sets I_B in conjunction with the "multipliers", R_4, R_5 and R_6. (These provide three h_{FE} ranges "x10", "x3", and "x1"). It seems that an additional battery might be needed to supply this extra voltage, but a simple circuit trick enables the main battery to be used. In Fig. 2, R_1 and R_3 are the two halves of a two-gang potentiometer connected so that one part increases as the other decreases, keeping the total resistance in circuit constant (in this case at 1kΩ). Together with R_2, the 5kΩ base current control, this puts 6kΩ across the 6V supply and (neglecting the small currents through R_4 to R_6) takes a constant 1mA from the battery. The base-current potentiometer R_2 is calibrated in terms of the voltage between its slider and lower end. The voltage across R_3 is the V_{BE} compensation voltage. No error is introduced by varying this, since the push-pull arrangement of R_1 and R_3 keeps the current in R_2 constant.

OPERATION OF THE TESTER

With the function switch S_1 in position 1, the meter reads collector leakage with base and emitter short-circuited. This should be too small a measure in

www.americanradiohistory.com

COMPONENTS

Resistors
(All fixed values ½ watt 5% unless otherwise stated)

R_1, R_3 2-gang potentiometer, 1kΩ each section, linear (available from G. W. Smith & Co. (Radio) Ltd., 3 Lisle Street, London, W.C.2.)
R_2 5kΩ potentiometer, log
R_4 100kΩ 2%
R_5 330kΩ 2%
R_6 1MΩ 2%
R_7 1kΩ
R_8 3.3kΩ
R_9 10kΩ

Meter
M_1 0–2mA moving-coil (see text)

Switches
S_1 single pole, 6-way
S_2 4-pole, 3-way
S_3 s.p.s.t., push-button

Diode
D_1 junction diode (see text)

Battery
6-volt battery

Miscellaneous
3-way test socket (transistor)
2-way test socket ("Leakage")
Knobs, case, etc.

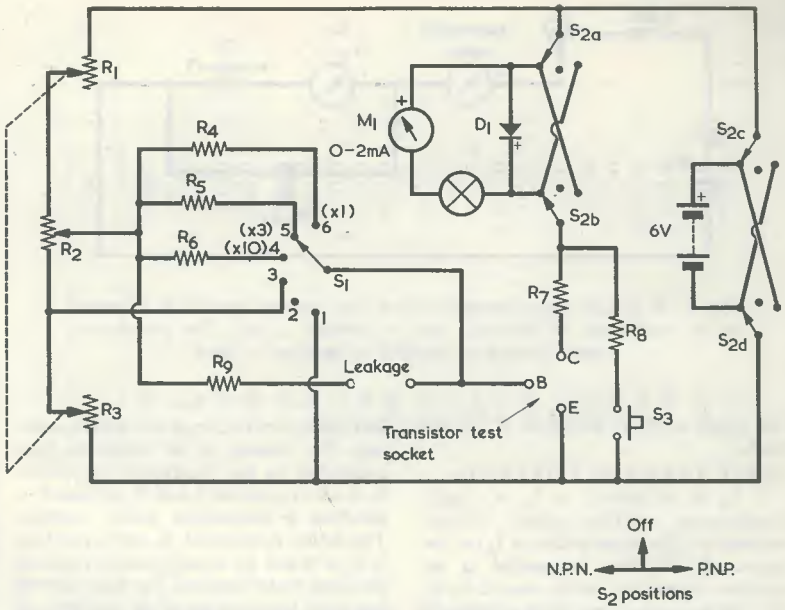

Fig. 2. The circuit of the d.c. transistor tester. In some instances it will be necessary to insert resistance in series with the meter at the point marked with a cross

the case of low-power transistors. In position 2, collector leakage I_{CEO} is indicated. This may be large enough to measure in germanium transistors. Position 3 enables the V_{BE} compensation to be set up. Adjust R_1, R_3 so that the required standard collector current is obtained, this being 1mA. R_1 and R_3 may be calibrated in terms of V_{BE} across R_3 if desired. S_1 is now switched to position 4, and R_2 adjusted so that the same standard collector current is again obtained. If this is not possible (because h_{FE} is too low for this range) S_1 is switched to position 5, and R_2 adjusted again; or, if still impossible, S_1 is set to position 6. When the correct setting of R_2 is found, h_{FE} can be read off its scale (multiplied by 10, 3 or 1 according to the setting of S_1). With the values of R_6, R_5, and R_4 shown, the minimum h_{FE} is 200, 60, and 20 respectively. Each range goes to infinity with the slider of R_2 at the lower end of its track. A log-law potentiometer produces a more open scale at high h_{FE} readings than a linear component.

Calibration is straightforward. Measure the voltage between the slider of R_2 and the junction of R_2 and R_3 with a high-resistance voltmeter. Put calibration marks on the scale of R_2 at 0.5V (mark "200"), 1V ("100"), 2V ("50"), 3.3V ("30"), and 5V ("20"). Intermediate marking points are given by:

$$\text{Voltage Reading} = \frac{100}{h_{FE}}.$$

Thus, as an example, for $h_{FE}=90$, voltage reading is 1.11.

R_1, R_3 can be calibrated in V_{BE} by measuring the voltage drop across R_3 at various settings.

CIRCUIT DETAILS

Safety resistor R_7 is included to limit the collector current to 6mA. Additional meter protection is provided by junction diode D_1, which shunts the meter movement. A germanium diode starts to conduct at about 250mV and a silicon diode at about 500mV. The germanium diode will be preferable with most movements. If necessary, some additional resistance can be put in series with the meter coil at the point marked with a cross to increase the voltage drop so that the diode conducts when the current just exceeds the full-scalve value. It may be helpful here to initially check the meter and diode circuit with the set-up shown in Fig. 3, where the meter and diode are connected in series with a second meter and a variable resistor. A suitable diode and series resistor value for the R_x position may then be found empirically. The diode may cause non-linearity in readings above some 1.5mA in the 0–2mA meter, but this does not upset operation in the tester circuit. When a suitable diode and value for R_x have been found these components may be incorporated in the circuit of Fig. 2.

BASE CURRENT MEASUREMENTS

R_2 may be calibrated in base current as well as h_{FE}. This is a very useful aid to biasing circuit design, especially if the meter is fully calibrated. Suppose, for example, that a transistor has to work at $I_C=0.6$mA in a circuit. By putting it into the tester, setting up $I_C=0.6$mA, and then reading off I_B from R_2 an essential piece of information for calculating base bias resistance is provided. The constructor can then set up his circuits to suit his particular transistors, instead of assuming "average" transistors, as manufacturers do in their published designs.

To calibrate R_2 in base current, measure the voltage across the lower part as before when calibrating in h_{FE}, but put marks on the scale at equal intervals of voltage, e.g. every 0.5V. When R_6 is in circuit, each mark then corresponds to an increment of 0.5μA. This is multiplied by 3 when R_5 is in circuit, and by 10 when R_4 is in circuit.

(Panel meters with an f.s.d. of 2mA are available from G. W. Smith & Co. (Radio) Ltd., 3 Lisle St., London, W.C.2. Alternatively, a 0–1mA meter, suitably shunted, may be employed instead.—EDITOR).

Push-button S_3 brings battery check resistor R_8 into circuit. The meter reading with a new battery should be marked on the instrument panel for future reference. S_2 is a 4-pole 3-way switch for polarity reversal, with a central "Off" position. R_4, R_5 and R_6 should have a tolerance of 2%.

www.americanradiohistory.com

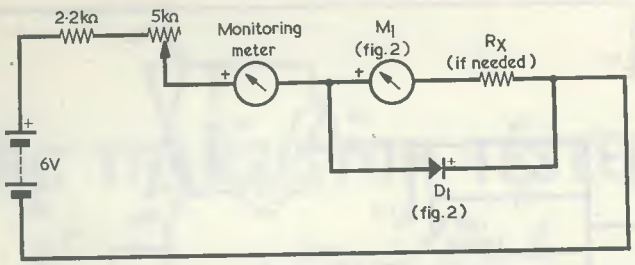

Fig. 3. A simple experimental circuit for finding the value of meter series resistance (if needed) and a suitable diode. The monitoring meter should be capable of reading 0–3mA

The range of I_B is therefore 0.5μA to 50μA.

SMALL LEAKAGE CURRENTS

If R_B is calibrated in I_B, a simple modification enables small leakage currents (of the same order as I_B) to be measured. All that is needed is an auxiliary transistor, which should be of the silicon planar type. This is plugged into the test terminals in the ordinary way, but its function is to amplify the leakage current through the device under test. The device to be tested is then connected to the "Leakage" terminals. S_1 is set to position 2, and R_2 adjusted to produce a convenient meter reading. The device is removed, S_1 set to position 4, 5, or 6 and R_2 re-adjusted to produce the same meter reading. The base current has now been set equal to the leakage current and so this can be read off the "I_B" scale of R_2.

Any pair of leads of a transistor may be connected to the "Leakage" terminals. The reverse leakage of a diode may also be measured. The "right way round" depends on the polarity of the device under test and the setting of the p.n.p.-n.p.n. switch S_2. To avoid damaging the auxiliary transistor when a device is connected the *wrong* way round, a 10kΩ resistor (R_9) is included. This is sufficiently low in comparison with leakage resistances to be negligible. It is sometimes useful to know the voltage applied to the device whose leakage is being measured. This can be read, approximately, off the I_B scale, since the "0.5μA" mark corresponds to 0.5V, and so on.

DIODE TESTING

Finally, a quick "good or dud" test on a diode can be made by connecting it across the "C" and "E" points of the transistor tester. With the polarity switch in one position the meter should read full-scale, and in the other it should read zero.

POCKET REFLEX RECEIVER

by ARMAN SAPCIYAN

Arman Sapciyan is resident in Istanbul, and regular readers may recall his previous design, "Short Wave Three", which appeared in our February 1968 issue. He now presents a neat and simple 2-transistor medium wave receiver which combines good sensitivity with low battery consumption.

TRANSISTOR RADIOS STILL CONTINUE TO BE ONE OF THE most interesting constructional projects for the home constructor. However, a great variety of transistor radios described in the home constructor magazines use a.f. transformers to couple the first stage to the second and this can make them rather bulky, as it is not possible to find subminiature transformers in every country in which these magazines are read.

The present design has only one a.f. transformer, between the output stage and the speaker. With a high impedance speaker it is possible to dispense even with this, whereupon the design represents a radio using no transformers at all.

Today, the reflex principle is widely in use with cheap Japanese portables which are sold in most countries. These incorporate at least one a.f. transformer. The receiver described here is not only simpler than these radios but provides a better performance. With the prototype it is possible to tune in at least ten foreign stations after dark in addition to two strong local ones in the medium wave band.

THE R.F. STAGE

The circuit of the receiver is given in the accompanying diagram. It employs two transistors, and the first stage, TR_1, consists of a reflex amplifier. A reflex amplifier is one that amplifies at two frequencies, usually at r.f. and a.f. Any home constructor who is familiar with this sort of receiver knows very well that in such a circuit everything depends upon the gain of the first transistor. Therefore, it is necessary to get maximum gain from the first stage, since the second stage will only amplify the signal received from the first stage. If the reader fails to get a satisfactory result from the first stage it is obvious that the performance will be disappointing (so far as sensitivity and selectivity are concerned) no matter how efficient the output stage is.

In the TR_1 stage, L_1 is a medium wave coil wound on a ferrite slab and tuned by C_1. The base of TR_1 couples into this coil by way of the tapping at "B", and it initially amplifies the received r.f. signal. This signal is detected by D_1 and D_2 and re-applied, as a.f., to TR_1 base. TR_1 amplifies once more and the amplified a.f. signal appears across R_3, being passed to TR_2 via C_6 and volume control VR_1. Resistor R_x has a value which ensures that TR_1 is just below oscillation point over most of the band covered, without actually breaking into oscillation at any point.

Constructors may find it of advantage to initially build the first stage on a relatively large chassis so that the process of experimentally finding the value of R_x can be carried out more easily. This value should be between 1MΩ and 150kΩ, and will vary for different transistors. Regeneration increases as the value of R_x reduces.

(*Continued on page* 27)

www.americanradiohistory.com

CUT ALONG THIS LINE

RADIO CONSTRUCTORS DATA SHEET 11

TEMPERATURE CONVERSION TABLE

In the Table, X may be degrees Fahrenheit or degrees Centigrade. If Fahrenheit the Centigrade equivalent is to the left; if Centigrade the Fahrenheit equivalent is to the right.

°C	X	°F	°C	X	°F
–40.0	–40	–40.0	26.7	80	176.0
–37.2	–35	–31.0	29.4	85	185.0
–34.4	–30	–22.0	32.2	90	194.0
–31.7	–25	–13.0	35.0	95	203.0
–28.9	–20	– 4.0	37.8	100	212.0
–26.1	–15	5.0	48.9	120	248.0
–23.3	–10	14.0	60.0	140	284.0
–20.6	– 5	23.0	71.1	160	320.0
–17.8	0	32.0	82.2	180	356.0
–15.0	5	41.0	93.3	200	392.0
–12.2	10	50.0	100.0	212	413.6
– 9.4	15	59.0	121.1	250	482.0
– 6.7	20	68.0	148.9	300	572.0
– 3.9	25	77.0	176.7	350	662.0
– 1.1	30	86.0	204.4	400	752.0
0	32	89.6	232.2	450	842.0
1.7	35	95.0	260.0	500	932.0
4.4	40	104.0	315.6	600	1,112.0
7.2	45	113.0	371.1	700	1,292.0
10.0	50	122.0	426.7	800	1,472.0
12.8	55	131.0	482.2	900	1,652.0
15.6	60	140.0	537.8	1,000	1,832.0
18.3	65	149.0			
21.1	70	158.0			
23.9	75	167.0			

www.americanradiohistory.com

LOOK OUT FOR

Q MULTIPLIER UNIT

IN NEXT MONTH'S

RADIO CONSTRUCTOR

OTHER FEATURES INCLUDE

- **Windscreen Wiper Control**
- **Shorted Turn Tester**
- **25-550M Transportable Superhet**

FREE

EASY-VIEW
DIARY (4th Quarter)
PLUS DATA SHEET

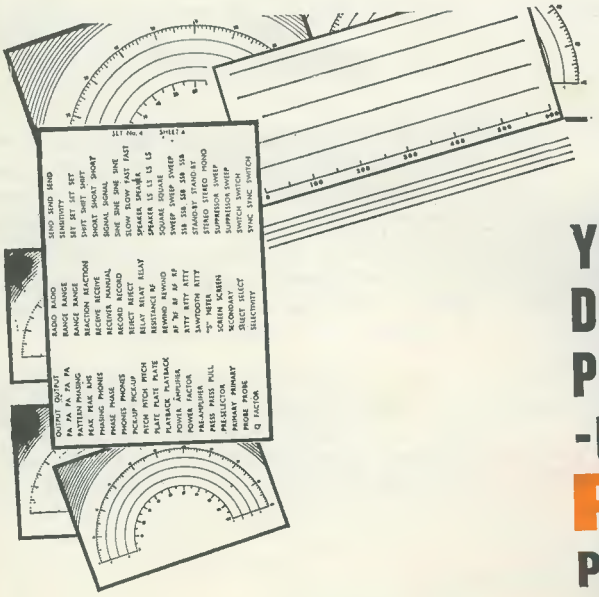

★ Set 3 Wording—WHITE
★ Set 4 Wording—BLACK
6 Sheets, over 1,000 words etc.
★ Set 5 DIALS—clear background
★ Set 6 DIALS—black background

4/6 per set *(postage 3d)*

YOUR FINISHED ASSEMBLY DESERVES A REALLY PROFESSIONAL FINISH -USE 'CONSTRUCTOR'

PANEL SIGNS

PERMANENT PAINT TRANSFERS

Send to:

DATA PUBLICATIONS LTD., 57 MAIDA VALE, LONDON, W.9

www.americanradiohistory.com

POCKET REFLEX RECEIVER

(Continued from page 24

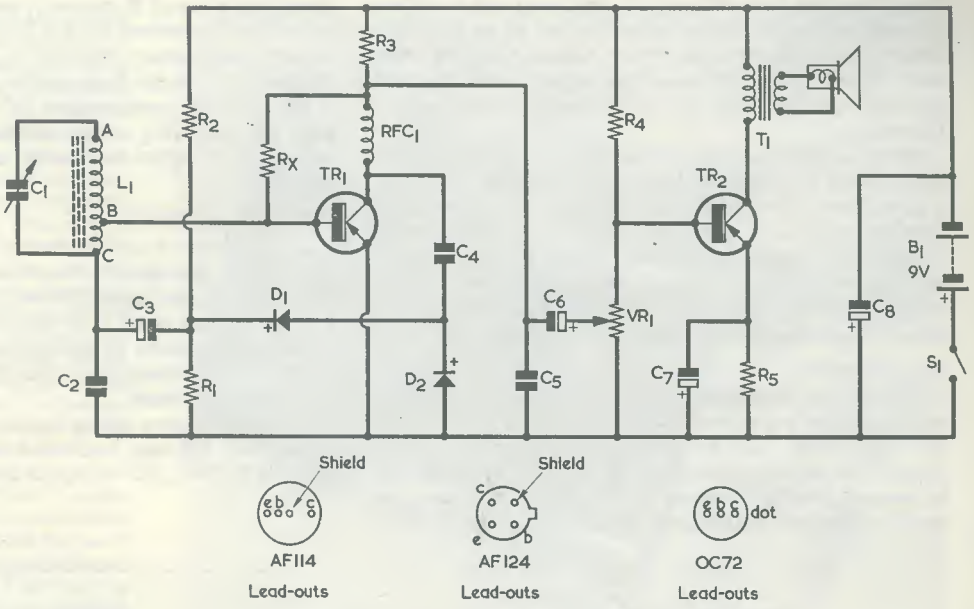

The simple circuit of the pocket reflex receiver

In the prototype, R_x had a value of 220kΩ when used with an AF124. It is necessary to use a new battery when finding the required value of R_x, and C_8 should be in circuit across the supply lines. (As some experimenting with coil turns may be needed, this could also be carried out at this stage.—EDITOR).

The writer checked a number of transistors in the TR_1 stage, including AF114 to AF117 and AF124 to AF127. In general, the AF114 and AF124 gave best results, particularly at the high frequency end of the band, and these types are specified here. No connection is made to the shield lead-out.

If desired, the TR_1 stage can be employed as a complete receiver on its own, an earpiece with a resistance of about 100Ω being connected between the positive side of C_6 and the positive supply line, and all components after C_6 (including C_8 in this case) omitted. It will then be possible to tune several foreign stations in addition to local ones with good volume. The total battery consumption of the first stage will be around 2.5mA from a 9 volt supply. The earpiece can also be used for checking the performance of the TR_1 stage whilst finding the value needed for R_x. The first stage will make a good front-end, incidentally, for any r.f. amplifier.

THE AERIAL COIL

Coil L_1 is close-wound on a ferrite slab measuring 6cm by 1.5cm by 4mm, the wire being 28 s.w.g. enamelled copper. The tuning capacitor may have a value lying between 250pF and 365pF, a 260pF component being used in the prototype. With this capacitor the total number of turns, from "A" to "C", should be 73 tapped at 8 turns ("C" to "B"). In the prototype this number of turns gave a coverage of 540 to 1,900 kc/s. With a 365pF capacitor in the C_1 position, the number of turns from "A" to "C" may be reduced to 63, the tap again being at 8 turns ("C" to "B"). (The metric figures for the ferrite slab correspond, approximately, to $2\frac{3}{8}$ by $\frac{5}{8}$ by $\frac{3}{16}$in.

COMPONENTS

Resistors
(All fixed values $\frac{1}{4}$ watt 10%)

R_x	See text
R_1	22kΩ
R_2	220kΩ
R_3	2.2kΩ
R_4	33kΩ
R_5	100Ω
VR_1	5kΩ potentiometer, log track, with switch

Capacitors

C_1	260pF variable, air-spaced (see text)
C_2	0.01μF, paper or plastic foil
C_3	50μF, electrolytic, 6V wkg.
C_4	470pF, ceramic or silver-mica
C_5	0.01μF, paper or plastic foil
C_6	5μF, electrolytic, 12V wkg.
C_7	100μF, electrolytic, 6V, wkg.
C_8	100μF, electrolytic, 12V, wkg.

Inductors

L_1	Ferrite aerial (see text)
RFC_1	2.5mH r.f. choke
T_1	Output transformer (see text)

Semiconductors

TR_1	AF114 or AF124
TR_2	OC72 or similar
D_1	OA70
D_2	OA70

Switch

S_1	s.p.s.t., part of VR_1

Battery

B_1	9-volt battery type PP3 (Ever Ready)

Speaker
Miniature moving-coil (see text)

www.americanradiohistory.com

Should readers have difficulty in obtaining a slab of these dimensions, an alternative would be the $4\frac{5}{8}$ by $\frac{1}{2}$ by $\frac{5}{32}$ in ferrite slab available from Henry's Radio. Slightly fewer turns from "A" to "C" would be required with this slab, although the 8 turn tap, "C" to "B", need not be altered.—EDITOR.).

Some variation in the regeneration effect is given by moving coil L_1 along the ferrite slab although, normally, it should be in the middle. Should the constructor wish to provide a physical feedback path, a small adjustable "capacitor", made up of two insulated wires twisted together over a short length, could be added between the collector of TR_1 and end "A" of L_1. From the writer's experience, this addition should not be necessary.

TR_2 STAGE

The output transistor, TR_2, may be an OC72 or any similar type of p.n.p. transistor. The output impedance is not very critical, and the prototype employed an output transformer whose ratio caused an impedance of 600Ω to be presented to the collector of TR_2. If a high impedance speaker of around 150Ω is available, this may be connected directly in place of T_1 primary, causing the whole receiver to be transformerless. (For a 3Ω speaker, T_1 may be any output transformer intended to match an OC72 to a 3Ω load, such as the Radiospares T/T4.—EDITOR).

The battery consumption of the complete receiver, with TR_1 and TR_2, is approximately 9mA from a 9 volt supply. This is quite reasonable, and a PP3 battery can be used.

CONSTRUCTION

The receiver may be finally assembled in a small plastic case, that used by the author measuring only 11cm by 7cm by 3.5cm (approximately $4\frac{1}{2}$ by $2\frac{3}{4}$ by $1\frac{3}{8}$in). The most important point is to ensure that adequate spacing is provided between all inductors. Thus, neither the r.f.c. or the output transformer should be close to the ferrite slab or to each other.

If, on tuning very strong signals, a motor-boating effect is observed, this may be cleared by slightly increasing the value of R_3 to 2.7kΩ or 3.3kΩ as required to remove the effect.

APPLICATIONS OF RECHARGEABLE CELLS

by
A. J. McEVOY

DEAC rechargeable cells offer a number of advantages over standard dry cells in electronic equipment. They may, for instance, be charged *in situ*, and this article describes two neat methods of carrying out this process. It should be emphasised that, because of the simple charging circuits employed, due attention must be paid to the risk of accidental shock from exposed metalwork.

A RECENT ADDITION TO THE LIST OF products easily available to the home constructor is the nickel-cadmium rechargeable cell, referred to as the DEAC cell. This article examines some applications of these cells. They are available in two forms: as single or welded stacks of button cells, or conforming to the voltages and dimensions of standard batteries, e.g. PP3 or U7. A DEAC battery is a multiple assembly of cells, each providing approximately 1.2 volts on discharge, just as the PP3, for example, consists of six zinc-carbon primary cells, each of 1.5 volts.

The nickel-cadmium cell has distinct advantages over the lead-acid secondary cell (the car battery type) which make it applicable to transistorised electronic equipment, despite higher production costs. It is completely sealed, so that there is no possibility of damage due to leaking electrolyte. The electrolyte (filling fluid) itself is alkaline, so that, though caustic to skin or flesh, it is not so damaging to metals as the acid of the lead accumulator. Unlike the accumulator, it does not deteriorate if left uncharged for long periods, and it withstands overcharging or excessive discharging well. Further, no gas is evolved during charge or discharge, so that no maintenance or topping up is required. In use, it has a lower internal resistance than the ordinary zinc-carbon battery, so contributing to decoupling efficiency between stages in amplifiers, etc.

RECHARGEABLE TORCH

As a preliminary experiment the writer decided to employ DEAC cells in a pocket torch. As it would be rather inconvenient to have to carry a separate

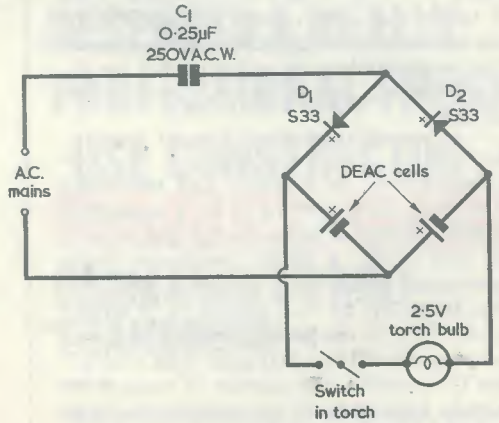

Fig. 1. Circuit for the rechargeable torch

www.americanradiohistory.com

charger, the development of a charger to fit inside the torch case was decided on. The use of a transformer was ruled out on the basis of size and cost, but as the whole torch, including the switch, was of plastic, there was no objection to some form of mains dropper. However, a resistor as mains dropper, as used in a.c./d.c. radios, would be very inefficient, dissipating as heat all but 3 volts, or so of the mains input. On the other hand, on a.c. mains a capacitor could be used, and this was found to operate effectively. Further, some form of full-wave rectifier is essential if low-voltage diodes are to be employed; otherwise a high voltage developed across the load on the reverse half of the cycle could result in damage, whereas if current is being drawn constantly such potentials cannot arise. A standard full-wave rectifier requires a centre-tapped supply, which is rather difficult to arrange without a transformer, and a bridge rectifier involves the use of four diodes. Eventually the system shown in Fig. 1 was adopted. This may be regarded as a modified voltage doubler, in which the DEAC cells take the place of the capacitors usually employed, while their internal resistance forms the load. The device is connected to the mains through a standard light socket, the bayonet adapter fitting through a hole cut in the end of the torch case, as can be seen in the accompanying photograph. The DEAC cells are smaller than the cells previously employed, whereupon there is plenty of spare space available inside the torch case for the components required in the charging circuit. The torch is simply plugged into a convenient mains socket when charging is required.

The torch previously held two U2 cells, the two DEAC cells which replace them being type 225DKZ. The two diodes employed by the writer were type S33, obtained from B. W. Cursons, 78 Broad Street, Canterbury, Kent, but any similar low voltage silicon diodes could be employed instead.

(The S33 has a p.i.v. of 50V and a maximum forward current of 50mA. *It is important to note that the charging circuit of Fig. 1 must on no account be used with a torch which has any exposed metal in electrical contact with the circuit, as such metal will be at mains potential.* —EDITOR).

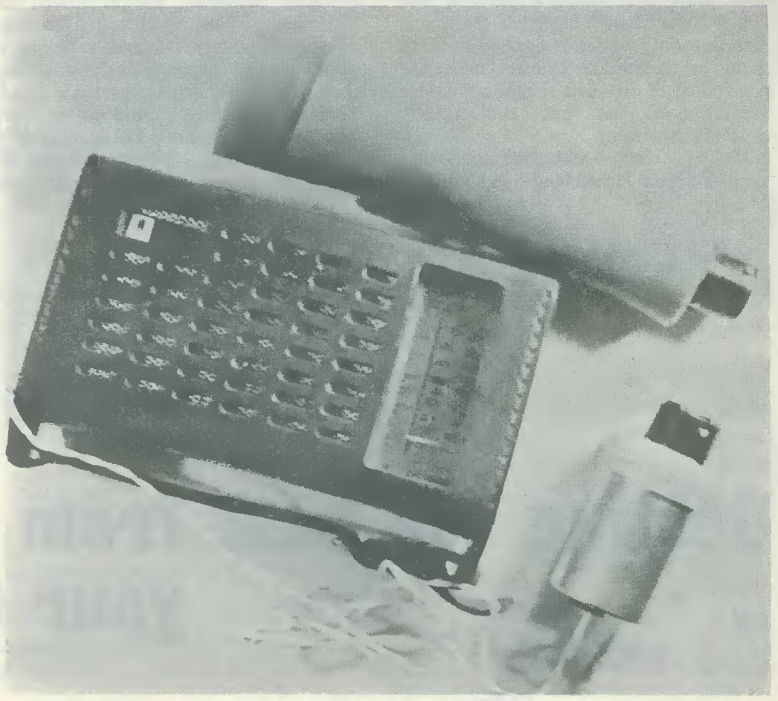

The rechargeable torch of Fig. 1, and the charger of Fig. 2 connected to its radio receiver. Note that both the torch and the radio battery charger are fitted with bayonet mains plugs

DEAC RADIO SUPPLY

Also shown in the photograph is a radio adapted for the use of DEAC cells. In this case a stack of five DEAC button cells type 225DKZ were used, these providing 6 volts and replacing four U7 cells. For this project a separate charger had to be built due to lack of space inside the radio after the DEAC cells had been inserted. Further, the use of a tap in the battery stack was undesirable, as a 3-pin connection would then be required between radio and charger. The battery was therefore simply wired to the circuit of the set and to a 2.5mm jack socket for the charger, the switching contact of the socket being removed. (A 2.5mm socket was chosen as the most compact 2-pin connection available, and to avoid confusion with the phone socket already mounted on the radio). Without a tapped battery, the rectifier system used in Fig. 1 was ruled out, and a bridge rectifier was employed. See Fig. 2. To ensure safety in operation, a second capacitor was used in the charger, so that, even if the connection to the mains is reversed, the output still is not connected directly to the phase lead. (See Editor's Note at end of article). Again, there is the risk that the charger might be plugged into the mains without the radio being connected to present a load to the rectifiers, with the possibility, as already mentioned, of exceeding their voltage rating. R_1 is therefore used as a "bleeder" to limit the voltage. The complete charger was assembled in a 35mm film can, with a bayonet mains connector plug to the top as in the case of the torch.

Working from the principles outlined and applied in these devices, the constructor can apply DEAC cells to other electronic devices, if necessary increasing the value of the mains dropper capacitor which, as the highest impedance in the circuit, limits the current available in the circuit. Here, however, a warning is in order. Electrolytic capacitors *must not* be used,

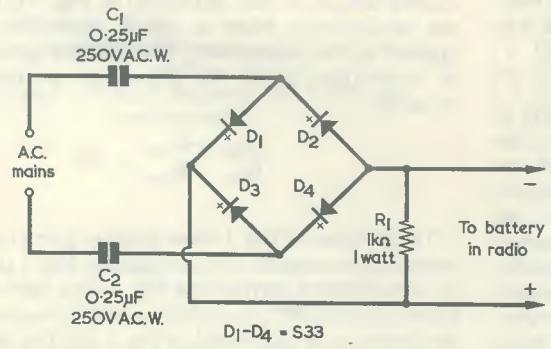

Fig. 2. Charging circuit for a 6-volt DEAC battery fitted in a radio receiver

www.americanradiohistory.com

since these are polarised devices, and will withstand high voltages from one direction only; if a.c. is applied to them there is immediate failure, with the possibility of the can exploding under pressure of the gas evolved by electrolysis within.

(DEAC cells and batteries are available from Home Radio in a number of sizes including the 225DKZ, the latter being a button cell with a diameter of approximately 1in and a height of about $\frac{3}{8}$in. Its capacity is 225mAh and recommended charging current is 22mA. Solder connections should not be made directly to the case of a DEAC cell. *With the circuit of Fig. 2 it must be noted that a 0.25μF capacitor does not give the degree of isolation from the mains supply that is required to meet standard safety requirements. Arrangements must therefore be made to ensure that there is no risk of accidental shock from any exposed metalwork on the radio receiver fitted with DEAC cells whilst charging is in progress.*—EDITOR).

Getting the Best from your Oscilloscope

by
D. J. GRIFFITHS

Part 4

In this final article in our four-part series on oscilloscope traces and their interpretation, our contributor starts by describing transmitter modulation patterns. He then concludes by discussing the troubles which arise due to faults in the oscilloscope itself.

THE OSCILLOSCOPE IS AN EXTREMELY USEFUL DEVICE for checking the modulation performance of transmitters. The pattern displayed by the oscilloscope may be of the trapezium type or of the wave envelope type.

TRAPEZOIDAL DISPLAYS

To obtain the trapezoidal pattern it is only necessary to apply the modulated r.f. signal to the vertical input of the oscilloscope and the audio modulating voltage to the horizontal plates. The oscilloscope timebase is inoperative when trapezium checks are being made. In practice, the r.f. signal can be obtained from a small loop loosely coupled to the transmitter output tank coil. The audio modulating voltage may be provided by a simple potentiometer attenuator across the modulator output, an isolating capacitor with low reactance to a.f. being inserted, if necessary, to block any h.t. voltages which may be present.

When the input levels are correctly set up, a trapezoidal display similar to that illustrated in Fig. 1 (*b*) is given by the oscilloscope when a steady modulating signal is applied to the transmitter. This pattern gives a measure of modulation depth, the percentage modulation being equal to:

$$\frac{E_{max} - E_{min}}{E_{max} + E_{min}} \times 100.$$

The patterns of Fig. 1 show displays given by a correctly operating transmitter and modulator. Fig. 1 (*a*) illustrates an unmodulated carrier, and Fig. 1 (*b*) a carrier which has approximately 60% modulation. 100% modulation, with no distortion, is illustrated in Fig. 1 (*c*). The straight sides of the wedge in Fig. 1 (*c*) indicate that distortion is absent, and the diagram represents an ideal case which is difficult

www.americanradiohistory.com

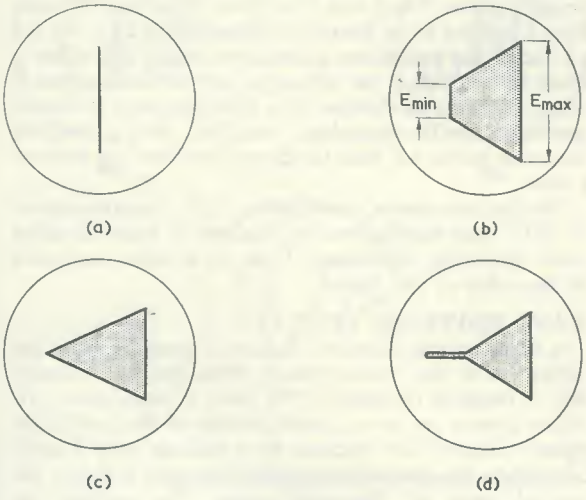

Fig. 1 (a). The trace given by an unmodulated carrier on an oscilloscope set up for trapezium pattern display
(b). The pattern given for a modulation depth of approximately 60%
(c). 100% modulation with no distortion
(d). Overmodulation of a transmitter capable of 10% modulation without distortion

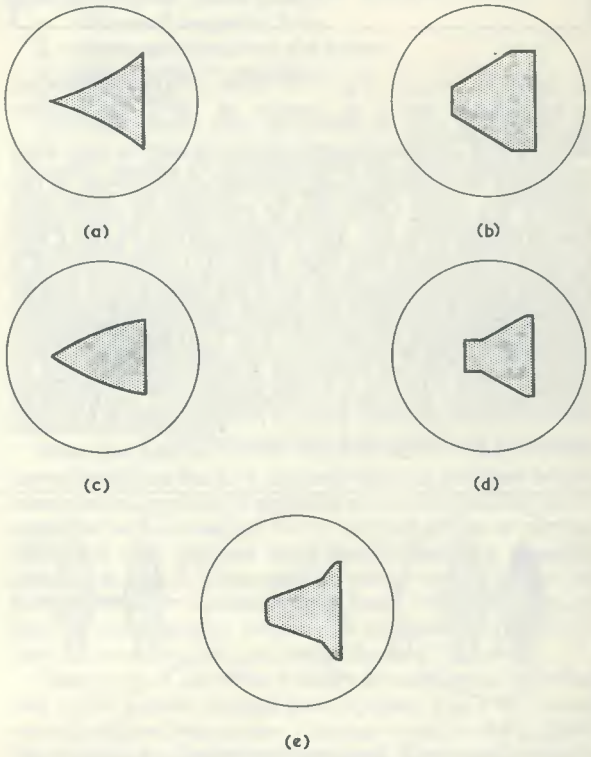

Fig. 2 (a). The pattern resulting from regeneration in the Class C stage
(b). The result of insufficient grid drive
(c). Rounding of sides due to modulator and amplifier running from the same supply line
(d). A Class B modulator incorrectly matched to a Class C load
(e). Adequate anode but low screen-grid modulation

Fig. 3 (a). Boundary ellipses caused by a.f. phase shift
(b). A good practical response for 100% grid modulation

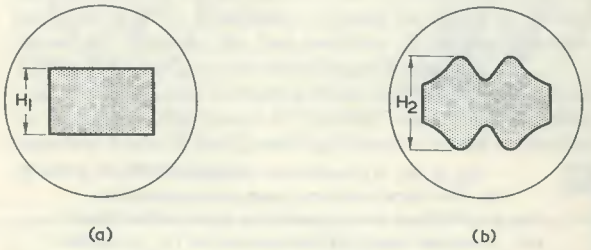

Fig. 4 (a). An unmodulated carrier, as shown when the oscilloscope is set up to display wave envelope shape.
(b). The carrier with 50% modulation

www.americanradiohistory.com

PREVIOUS ARTICLES IN THIS SERIES WERE PUBLISHED IN OUR MAY, JUNE AND JULY ISSUES

to realise in practice. Fig. 1 (*d*) shows overmodulation on a transmitter which is capable of 100% modulation without distortion.

Fault conditions are demonstrated in Fig. 2. Fig. 2 (*a*) illustrates the pattern resulting from regeneration in the Class C p.a. stage, which may be insufficiently neutralised and have too much bias. Insufficient grid drive to the Class C stage is shown in Fig. 2 (*b*). Fig. 2 (c) is the result of a Class B modulator running from the same power line as the modulated amplifier; the supply voltage drop on peaks causes a rounding of the sides. Fig. 2 (*d*) shows a pattern given when a Class B modulator is incorrectly matched to a Class C load. In Fig. 2 (*e*) the anode is well modulated but the screen-grid very little. A possible cause is too high a value in the screen-grid bypass capacitor.

Two further trapezium patterns appear in Fig. 3. Fig. 3 (*a*) shows good modulation, the displacement of the boundary lines being due to a phase difference between the a.f. applied to the horizontal plates of the c.r.t. and the a.f. fed to the modulated transmitter stage. This effect is likely to be given if the a.f. input for the oscilloscope is taken, from the modulator, at a different point to that of application to the modulated amplifier, or if a blocking capacitor in the a.f. feed to the oscilloscope has too low a value.

The final waveform, shown in Fig. 3 (*b*), is representative of 100% grid modulation, as obtained in practice under good operating conditions. There is a slight curvature of the sides of the figure.

WAVE ENVELOPE DISPLAYS

A much greater range of displays is possible when the pattern is of the wave envelope type, but considerable skill is required to interpret the trace in some cases. To obtain a wave envelope trace a portion of the modulated signal, obtained for instance by a pick-up loop loosely coupled to the transmitter output tank coil, is fed to the vertical input of the oscilloscope. The oscilloscope

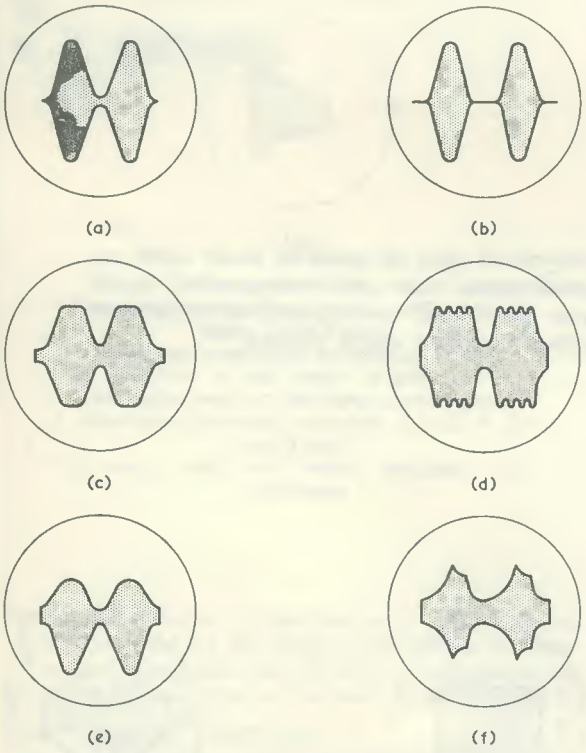

Fig. 5 (a). A modulation depth of 100%
(b). The trace resulting from overmodulation
(c). Insufficient grid drive to the transmitter "final"
(d). A similar effect to that shown in (c), together with a tendency towards oscillation at a.f. due to mismatch
(e). This trace may be caused by a detuned "final" or by faulty operation in the oscilloscope amplifier itself
(f). A trace given by detuning the anode circuit of the modulated amplifier

Fig. 6. Unwanted deflection of the c.r.t. beam due to an external alternating magnetic field

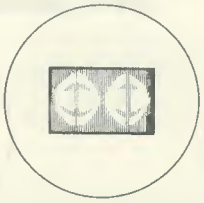

Fig. 7. Variations in brightness due to 50c/s hum modulation

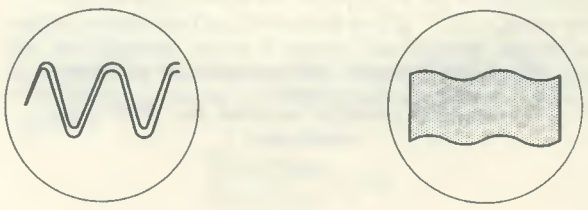

Fig. 8 (a). Hum in the Y amplifier with a slow timebase speed and a sine wave input
(b). Hum with a faster timebase and an input signal around 1,000 c/s

www.americanradiohistory.com

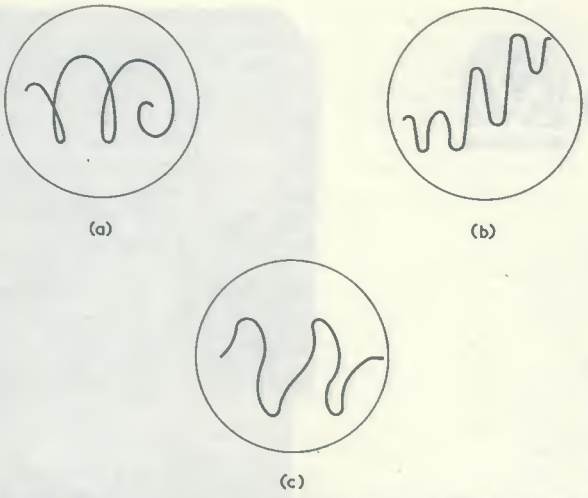

Fig. 9 (a). The result of "signal in timebase" due to faulty decoupling
(b). The reverse effect—timebase voltage in the Y amplifier
(c). Another trace resulting from cross-talk between X and Y sections of the oscilloscope

timebase is then set up to allow two cycles of the modulating a.f. to be displayed. To check for faulty transmitter operation, the modulating a.f. should be a sine wave.

Fig. 4 (*a*) illustrates the trace given by the unmodulated carrier and Fig. 4 (*b*) the trace when modulation is applied. Working from the dimensions H_1 and H_2 shown in these two diagrams, percentage modulation is equal to:

$$\frac{H_2 - H_1}{H_1} \times 100.$$

The display in Fig. 4 (*b*) represents a modulation depth of approximately 50%.

Fig. 5 (*a*) illustrates 100% modulation by a sine wave with no distortion, whilst Fig. 5 (*b*) shows overmodulation. In the latter case there is separation between a.f. cycles. Insufficient grid drive to the modulated Class C amplifier is illustrated in Fig. 5 (*c*), this being indicated by the clipped peaks. The display of Fig. 5 (*d*) is similar to Fig. 5 (*c*) but there is also a mismatch between the Class B and Class C stages, resulting in a tendency towards parasitic a.f. oscillation.

Fig. 5 (*e*) can be caused by rectification or overload in the oscilloscope amplifier itself. Another possible cause is a detuned transmitter "final" in grid modulated Class C. An effect of the type shown in Fig. 5 (*f*) can be the result of detuning the anode circuit of the modulated amplifier.

OSCILLOSCOPE OPERATING TROUBLES

To conclude this series of articles, the writer will finally deal with faults in the oscilloscope capable of causing distortion of the trace. The faults can be categorised into four main classes, these being:

1. Effects of magnetic fields.
2. Hum modulation of the beam.
3. Hum in the Y amplifier.
4. Cross-talk.

Magnetic fields give distortion of the trace due to deflection of the c.r.t. beam. Steady magnetic fields do not normally appear at any strength in practical oscilloscopes and cause no trouble. On the other hand, alternating fields due to mains transformers and smoothing chokes are present and can cause a great deal of distortion. A typical example is shown in Fig. 6. This distortion can be reduced or eliminated by careful positioning of the mains transformer and smoothing choke, the best position often being behind the tube. In extreme cases it may be necessary to shield the tube with a high permeability material such as Mumetal. This solution is very effective but tends to be somewhat expensive.

Hum modulation of the beam is liable to occur if the power supply to the c.r.t. is poorly filtered. Its effect is best observed by applying a signal of about 1,000 c/s to the Y amplifier with a sweep of 25 c/s. Vertical stripes of varying brilliance then indicate hum modulation. An example appears in Fig. 7. Hum may be picked up at the grid of the tube due to excessively long leads. Hum of this type may be considerably reduced by connecting a 0.001μF capacitor between the grid and cathode of the tube.

Hum in the Y amplifier is easily detected by its effect on any signal passed through the amplifier. Fig. 8 (*a*) shows the effect given with a slow timebase speed, and Fig. 8 (*b*) the effect with a faster timebase speed. The cause is usually inadequate power supply filtering or faulty decoupling or bypass capacitors. When constructing an oscilloscope amplifier it is important to avoid the formation of hum loops in the wiring; these are subsequently often difficult to find.

Cross-talk, in the present context, refers to interaction between the Y amplifier and the timebase. Fig. 9 (*a*) shows the result of bad decoupling in the h.t. line; the effect illustrated usually appears at low frequencies only. This trace is the result of "signal in timebase", i.e. X deflection is produced by a combination of both timebase and signal. Fig. 9 (*b*) shows the opposite effect and is the result of timebase voltage appearing in the Y amplifier. A combination of these two types of breakthrough can also occur. Fig. 9 (*c*) illustrates a typical example of general cross-talk between the two sections of the oscilloscope. In Fig. 9 (*a*) to (*c*) a sine wave input is applied.

If the cross-talk becomes more evident with increase in frequency, the cause is possibly capacitive coupling between X and Y leads, and may be eliminated by greater spacing or screening.

NOW HEAR THESE

Readers interested in listening to short wave broadcasting stations, especially the Dx variety, may like to try the following—currently being reported by our monitoring station.

4965 kc/s HJAF Radio Santa Fe, Bogota, Columbia, with Ident. at 0600GMT.
4945 kc/s HJDH Radio Colosal, Neiva, Columbia, with Ident. at 0630GMT.
4890 kc/s Dakar, Senegal, with African drums and Ident. at 2045GMT.
4976 kc/s Kampala, Uganda, with announcements in English at 2030GMT.

www.americanradiohistory.com

TRANSISTORISED WIDE-BAND PRE-AMPLIFIER

by
W. KEMP

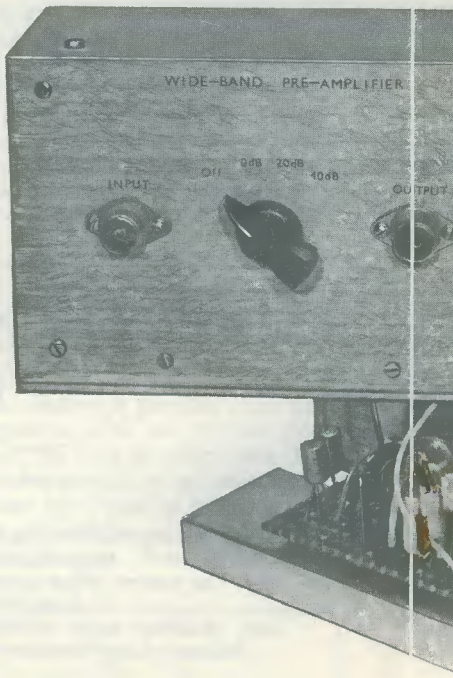

This pre-amplifier, primarily intended for use with an oscilloscope, gives either 20dB or 40dB of gain at frequencies up to 5Mc/s, or 700kc/s, respectively. Veroboard construction is employed, and the whole unit can be accomodated in a case measuring 6 x 4 x 2½in.

A GREAT MANY OF THE MODERATELY PRICED oscilloscopes that are now available offer direct coupling and a reasonably good frequency response, but suffer from rather poor maximum sensitivity (usually in the order of 100mV/cm). Occasions often arise, however, when it is necessary to inspect very low level a.c. signals, and in these cases the sensitivity of such oscilloscopes proves to be totally inadequate. This snag can be overcome by interposing a calibrated wide-band pre-amplifier between the signal source and the oscilloscope input terminals, the pre-amplifier giving voltage amplification in decade steps. Thus, if the basic oscilloscope has a maximum sensitivity of 100mV/cm, and the pre-amplifier gives a voltage gain of 40dB, the combination increases the overall sensitivity to 1mV/cm.

A point that is not always appreciated, particularly amongst technicians, is that the input impedance of an oscilloscope is represented as a resistance (typically in the order of 2 MΩ) in parallel with a small capacitance (typically in the order of 50pF), so that at low frequencies the impedance is largely resistive, whilst at high frequencies it is largely capacitive. Thus, with a typical oscilloscope the input impedance at 1 Mc/s may be in the order of a mere 3 to 4kΩ. Quite clearly, the input impedance at high frequencies can be increased by reducing the value of the shunt capacitance, and a pre-amplifier or impedance converter may be used for this purpose.

The unit that forms the basis of this article is a transistorised wide-band pre-amplifier, and offers voltage gains of either 0dB, 20dB, or 40dB. The frequency response of the unit is flat within 3dB from a few c/s to approximately 5 Mc/s on the 0dB and 20dB ranges, and from a few c/s to 700 kc/s on the 40dB range. A.C. input impedance is greater than 3MΩ shunted by approximately 2.5pF, and output impedance is in the order of 100Ω or so. Thus, the unit will increase the input impedance of the average oscilloscope by a factor of about 20 times, and will increase sensitivity by up to 100 times. The unit will handle inputs in excess of 1 volt r.m.s.

THE CIRCUIT

The wide-band pre-amplifier employs a five transistor circuit, shown in "block" form in Fig. 1. The input signal is first applied to the impedance converter given by TR_1 and TR_2. This gives a high input impedance and a low output impedance, but offers unity voltage gain.

The signal is then fed to the TR_3–TR_4 amplifier, which offers a variable gain of either 20dB or 40dB. Finally, one or other of the three available signal levels is selected by S_1 and fed to the output socket via a second impedance converter, TR_5.

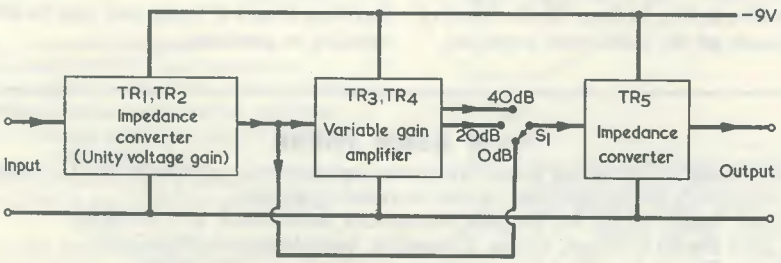

Fig. 1. Block diagram, showing the functions of the basic pre-amplifier stages

www.americanradiohistory.com

It will be noted that the amplifier section of the unit is in use under all input conditions, thereby simplifying the circuit switching. This means that the amplifier will be overdriven when the OdB setting is in use; but this will cause no damage to the circuitry.

The individual "blocks" are of considerable interest and, since they are of use in many other applications their development will be explained in some detail. The first of these, the impedance converter, is developed from the basic emitter follower shown in Fig. 2 (*a*).

Here, the emitter follower TR_1 uses emitter load R_L and base bias resistors R_1 and R_2. The input is applied to TR_1 base via C_1, and the output, which is in phase with the input, is taken from the emitter. The circuit gives unity voltage gain.

To a first order approximation, the input impedance of an emitter follower is given as the current amplification,

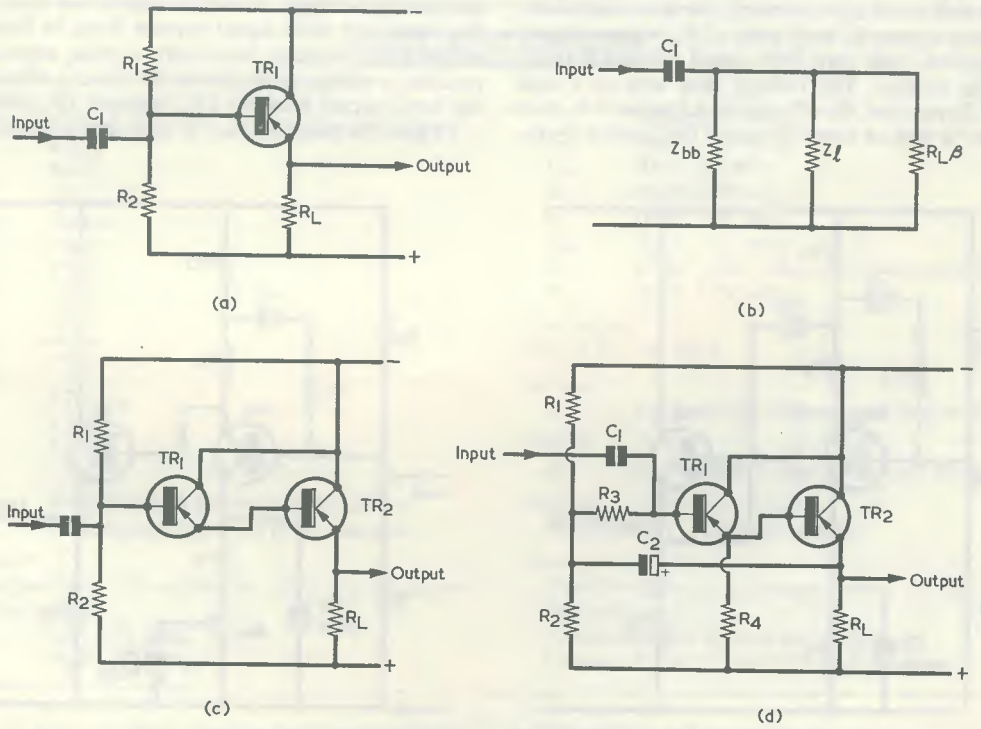

Fig. 2 (a). The emitter follower
(b). Illustrating the approximate input impedance of the emitter follower at low frequencies
(c). The Darlington or Super-Alpha pair
(d). How the shunting effect of R_1 and R_2 can be minimised by bootstrapping

www.americanradiohistory.com

β, of the transistor, multiplied by the emitter load R_L. This figure, however, indicates the impedance looking into the base of TR_1, and ignores the shunting effect of the base bias network and the leakage impedance of the transistor. Thus, the input impedance to the actual emitter follower circuit can be represented by three impedances in parallel, as shown in Fig. 2 (*b*). Here, Z_{bb} is the impedance of R_1 and R_2 in parallel, and Z_1 is the leakage impedance of TR_1.

Since the input impedance to the base of the emitter follower is given as $\beta \times R_L$, the impedance can be raised either by increasing the value of the emitter load or by increasing the effective current amplification of the transistor. One method of achieving the second of these two alternatives is to use the Darlington or Super-Alpha pair connection, as shown in Fig. 2 (*c*).

In Fig. 2 (*c*) TR_1 and TR_2 collectors are common, and TR_1 emitter current is fed directly into TR_2 base. Thus, TR^1 and TR^2 represent a 3-terminal network with a β equal to $\beta_1 \times \beta_2$; and a very high input impedance is thus achieved. If required, the effect of varying leakage currents in TR_1 on the output potential at TR_2 emitter can be minimised by connecting a high value loading resistor between TR_1 emitter and the lower supply line.

The shunting effect of the base-bias network on the Darlington connected emitter follower can be minimised by the use of the bootstrapping technique, as shown in Fig. 2 (*d*). In this diagram an isolating resistor, R_3, is connected between the base of TR_1 and the junction of the two base-bias resistors, R_1 and R_2. The input signal is then connected via C_1 to the base of TR_1, whilst the output signal from TR_2 emitter is fed back to the R_1–R_2–R_3 junction via C_2. Thus, since the input and output signals are in phase and are of approximately the same amplitude, similar signals appear at both ends of R_3 when an input signal is applied, and very little signal current actually flows in this resistor. The resistor thus acts as a high impedance. In practice, the effective (a.c.) value of R_3 may be increased to tens of times its actual (d.c.) value by the use of this bootstrapping technique, and the shunting effect of R_1 and R_2 is minimised.

The final development of this circuit is shown in Fig. 4, the full circuit diagram of the unit. Here, TR_1 and TR_2 are Darlington-connected as an emitter follower, with R_5 as emitter load, and the base bias is bootstrapped via C_2. In addition, however, the leakage impedance of TR_1 is also bootstrapped, via R_6 and C_3, and its shunting effect on the input impedance is virtually eliminated. The input impedance of the prototype unit was measured as approximately 5MΩ, and values of at least 3MΩ can normally be expected from the circuit. The input capacitance can be expected to be between 2 and 3pF.

AMPLIFIER SECTION

The development of the amplifier "block" can now be considered, and here two modes of operation, depending upon the gain requirements, may be used.

Fig. 3 (*a*) shows the basic configuration used in the +40dB (times 100) circuit. TR_3 is wired as a fairly conventional common emitter amplifier with emitter bias resistor R_9 bypassed by C_5, and the output from TR_3 collector is fed to an emitter follower, TR_4. TR_4 acts as a buffer between TR_3 and the following stages and enables a high value of collector load to be used. To allow the maximum possible voltage gain to be achieved from TR_3, with good thermal stability, the collector load of this transistor is increased artificially, by the use of the bootstrapping technique.

The collector load of TR_3 is split into two parts, R_{10} and R_{11}, and the output signal at TR_4 emitter, which is of the same phase and form as that at TR_3 collector, is fed back to the junction of R_{10} and R_{11} via C_6. Similar alternating voltages therefore appear at both ends of R_{11}, and very little signal current flows in this resistor, which thus becomes effectively a high impedance. In practice, a voltage gain of some 400 times is obtained from this basic circuit, between TR_3 base and TR_4 emitter.

To give the exact amount of gain that is required of the

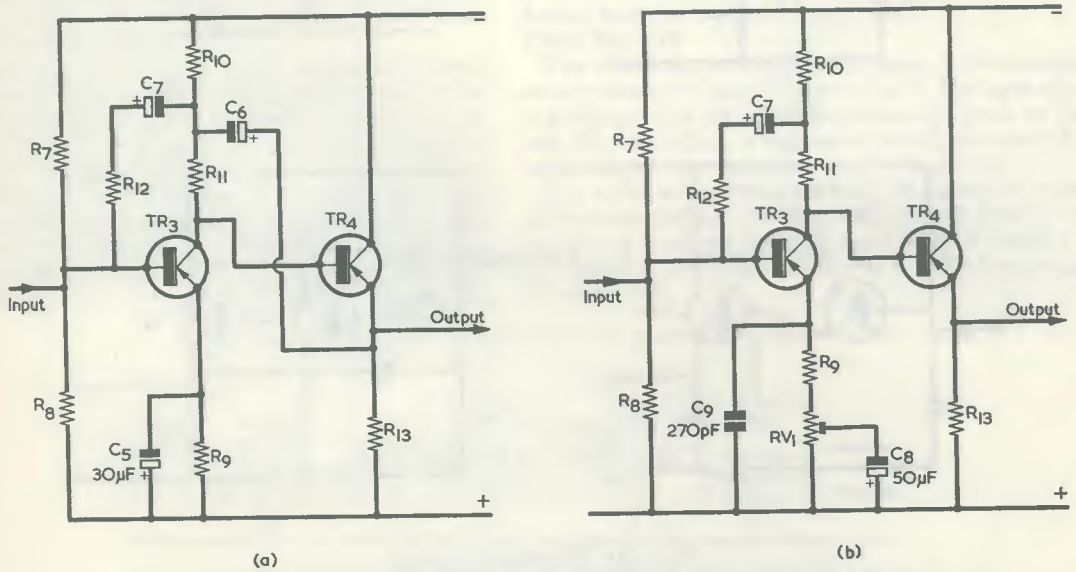

Fig. 3 (a). The TR_3 and TR_4 stages, when connected to offer 40dB gain
(b). The gain becomes 20dB with emitter degeneration applied to TR_3

www.americanradiohistory.com

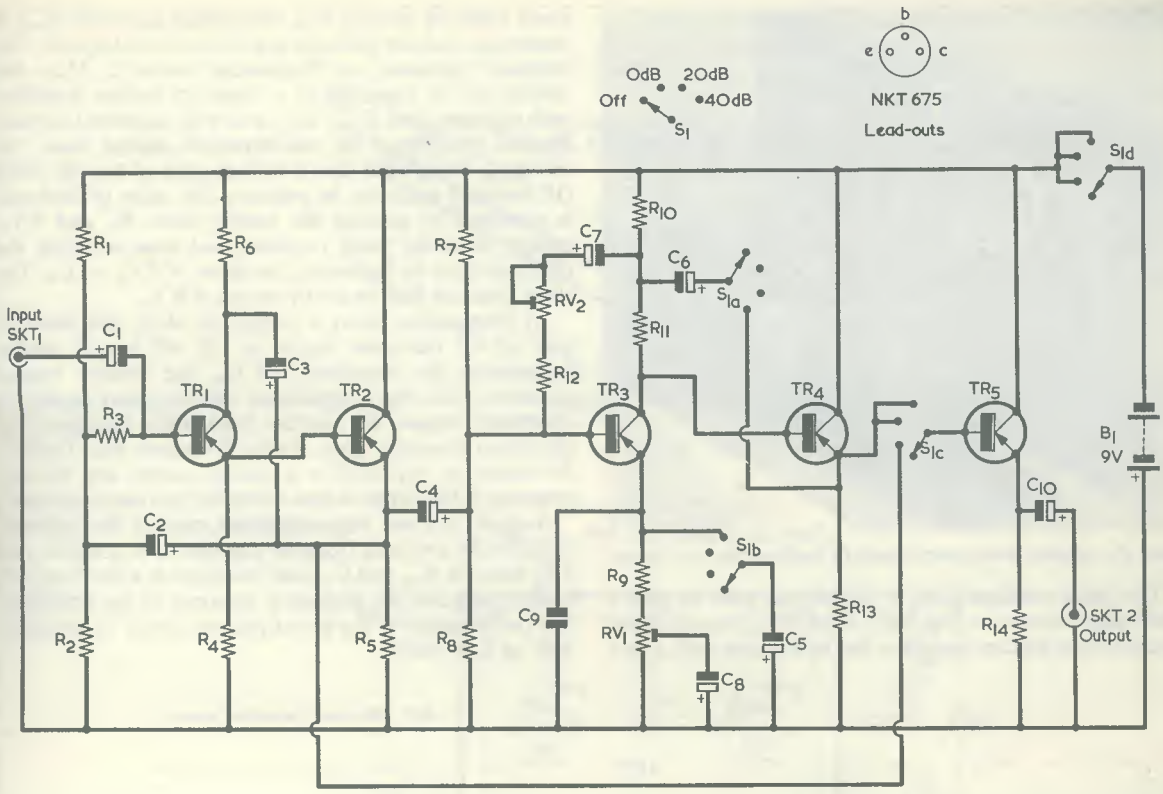

Fig. 4. Complete circuit of the wide-band pre-amplifier

COMPONENTS

Resistors

(All fixed values ½ watt 10% unless otherwise stated)

R_1	47kΩ
R_2	56kΩ
R_3	300kΩ 5%
R_4	270kΩ
R_5	10kΩ
R_6	47kΩ
R_7	100kΩ
R_8	10kΩ
R_9	220Ω
R_{10}	1.2kΩ
R_{11}	4.7kΩ
R_{12}	4.7kΩ
R_{13}	4.7kΩ
R_{14}	2.2kΩ
RV_1	500Ω skeleton pre-set potentiometer
RV_2	25kΩ skeleton pre-set potentiometer

Capacitors

(All capacitors sub-miniature electrolytic unless otherwise stated)

C_1	2μF, 15V wkg.
C_2	16μF, 15V wkg.
C_3	16μF, 15V wkg.
C_4	16μF, 15V wkg.
C_5	30μF, 6V wkg.
C_6	16μF, 15V wkg.
C_7	16μF, 15V wkg.
C_8	50μF, 15V wkg.
C_9	270pF, silver-mica or polystyrene (see text)
C_{10}	50μF, 15V wkg.

Transistors

TR_1–TR_5 NKT675

Switch

S_1 4-pole 4-way wafer, break-before-make

Battery

B_1 9-volt battery type PP3 (Ever Ready)

Sockets

SKT_1, SKT_2 Coaxial sockets

Miscellaneous

Veroboard panel, 0.15 matrix, 4½ x 1¼, (see Fig. 5)
Pointer knob
Aluminium for chassis and panel, etc.
Chassis, 6 x 4 x 2 in with corner brackets

circuit, and with the best possible frequency response, part of the signal from the R_{10}, R_{11} junction (which is the same as that at TR_4 emitter) is fed back to TR_3 base via R_{12} and C_7, the value of R_{12} being chosen to set the overall voltage gain at 100 times. On the prototype, the frequency response was measured as being 3dB down at 700 kc/s under this condition, and this performance is considered as being adequate for most applications.

www.americanradiohistory.com

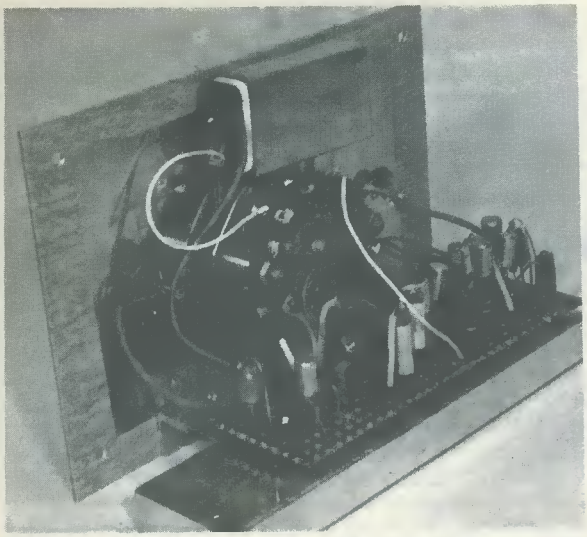

How the chassis and components fit behind the front panel

The basic configuration of the circuit used to give a 20dB gain is shown in Fig. 3 (*b*). Here, TR_3 is again wired as a common emitter amplifier, but in this case only a very small value of emitter bias decoupling capacitor (C_9) is employed, and the collector load is not bootstrapped. For practical purposes, at frequencies below 2 Mc/s the circuit can be regarded as a common emitter amplifier with collector load $R_{10}+R_{11}$, and with negative feedback applied by way of its non-bypassed emitter load, the feedback being such that a voltage gain of exactly 20dB (10 times) is achieved. In practice, this value of feedback is obtained by making the emitter load, R_9 and RV_1, greater than the value required, and then reducing the effective value by bypassing the slider of RV_1 via C_8. The exact gain can then be set by means of RV_1.

At frequencies above a couple of Mc/s, the inherent gain of the transistor begins to fall off, but at similar frequencies the impedance of C_9, the emitter bypass capacitor, falls by a significant amount, and begins to effectively bypass the emitter load, thus counteracting the fall in transistor gain. As the frequency rises further, the emitter is bypassed to a greater extent; and the fre-response of the circuit is thus extended by a useful amount.

A small, but not very significant, part of the collector signal is also fed back from the junction of R_{10} and R_{11} to TR_3 base via R_{12} and C_7, and this helps in a small way to further improve the frequency response of the amplifier. The performance of the prototype was found to be within 3dB up to 5 Mc/s.

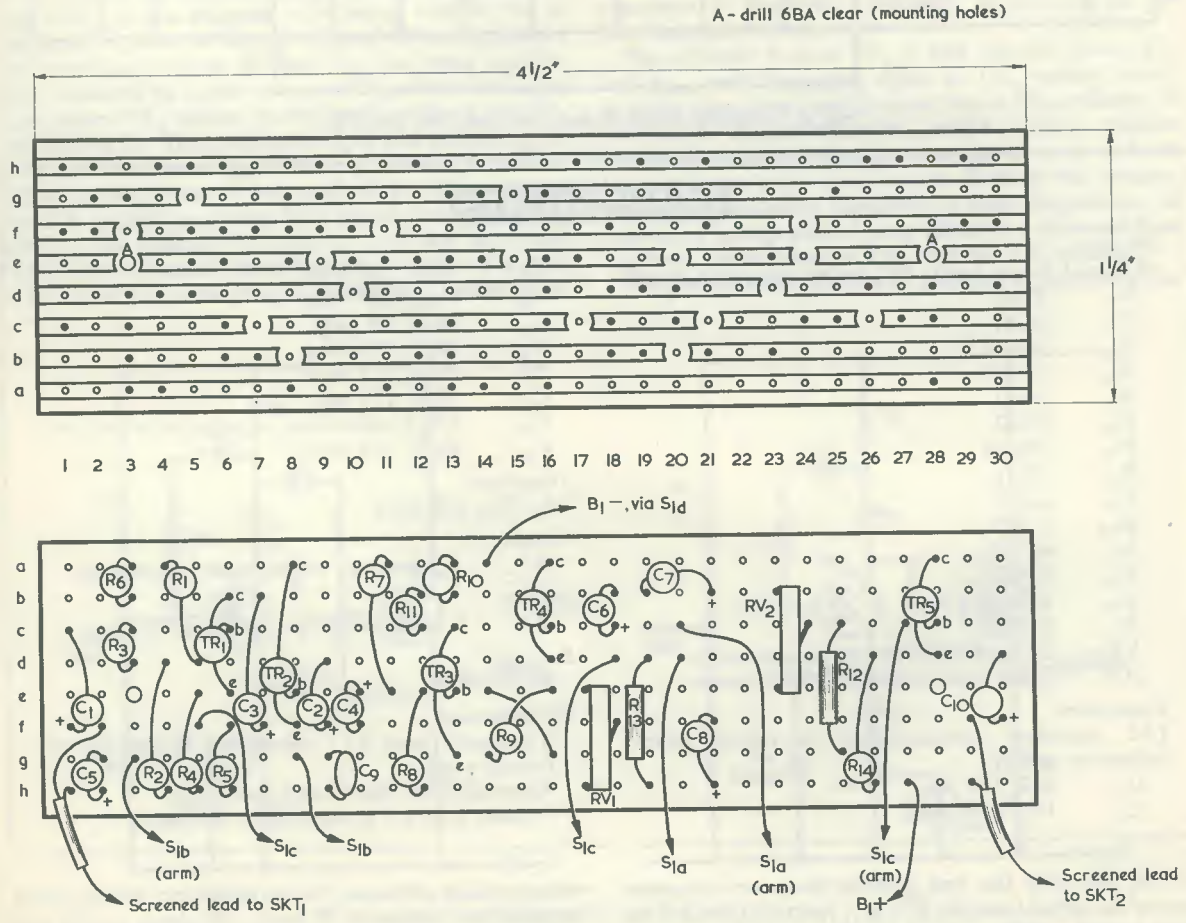

Fig. 5. Copper and component sides of the Veroboard panel. Switch connections may be readily traced with the aid of Fig. 4

www.americanradiohistory.com

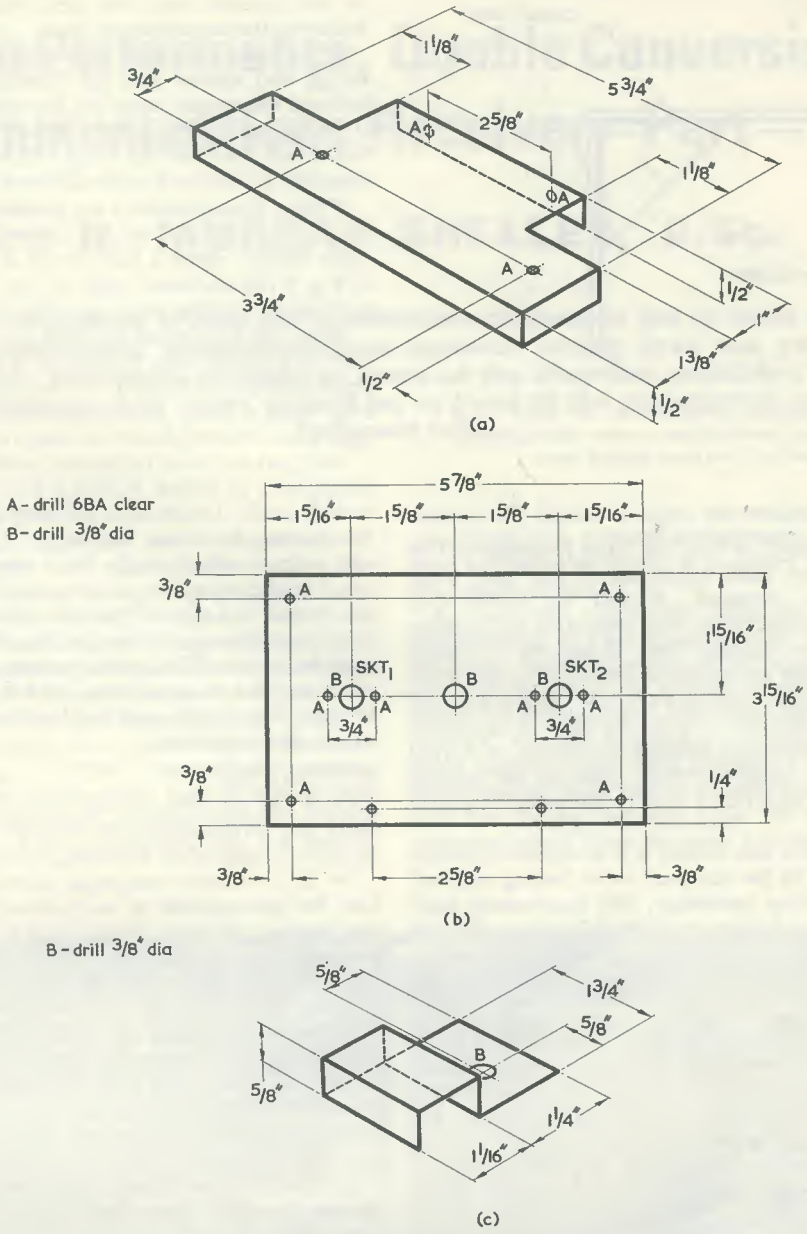

Fig. 6 (a). The main chassis
(b). Drilling details for the front panel
(c). The battery holder. This is secured under the switch bush

The output from TR_3 collector is fed to the following circuitry via the emitter follower, TR_4. This transistor has a very low input capacitance and thus minimises the effective reduction in TR_3 collector load through the capacitive loading at high frequencies that would otherwise occur.

The full circuit diagram of the completed circuit is shown in Fig. 4, and here it will be noted that the mode of operation of TR_3 and TR_4 can be altered to conform to either Fig. 3 (*a*) or 3 (*b*) by suitable switching. The only difference between Fig. 4 and these two diagrams is the inclusion of RV_2 in the negative feedback loop from TR_3 collector load (R_{10}–R_{11} junction) to TR_3 base, RV_2 enables the 40dB gain figure to be set up without difficulty.

The final output of the unit is taken from the emitter of TR_5, another emitter follower. The input to TR_5 base is taken from either the main amplifier or from the emitter of TR_2, via switch S1(c). The circuit uses a built-in 9 volt battery supply.

An outstanding advantage of the configuration used in Fig. 4 is that the amplified signal is in anti-phase to

www.americanradiohistory.com

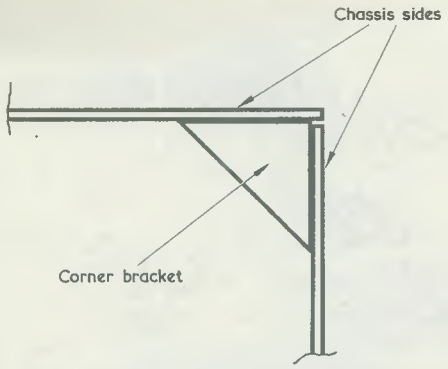

Fig. 7. A standard chassis may be used as a housing, and it should have corner strengthening brackets of the type shown here

the input at all times, so that any stray feedback will be degenerative rather than regenerative, and very good stability is thus obtained. It will be noted that no decoupling networks have been inserted in the negative supply line, these having been found to be quite unnecessary, on the prototype at least. It has not even been found necessary to connect a bypass capacitor across the supply lines. Should there be any sign of instability in the unit, a decoupling network consisting of a 1kΩ resistor and 16μF capacitor may, however, be inserted between the TR_2 and TR_3 stages in the negative rail to overcome it.

With amplifiers of this nature it is sometimes possible for current loops in the screened cable feeding external circuitry to introduce instability, this manifesting itself in the form of high frequency (several Mc/s) oscillation. Should this problem occur with the present amplifier the length of external connecting leads may need to be reduced.

CONSTRUCTION

The major part of the amplifier is wired up on a small piece of Veroboard panel, thus retaining all the advantages of printed circuit construction while involving none of the complications of marking out and etching which are normally encountered in printed circuit practice.

Start construction by cutting the Veroboard panel to size, as shown in Fig. 5, and then break the copper strips, with the aid of a small drill or the special cutting tool that is available, where indicated. Drill the two small mounting holes to clear 6BA screws where shown, and cut back the copper around them to minimise any risk of short circuits when the panel is secured in place on the main chassis.

Now turn the panel over and mount the components, shorting links, and leads in place, as shown in the diagram and then solder these in position. Note that all components, other than R_{12} and R_{13}, are mounted vertically on the panel. The assembly is fairly cramped and insulated sleeving should be used where there is any danger of short-circuits occuring.

Before attempting to secure the two pre-set variable resistors, RV_1 and RV_2, in place on the panel, the width of their mounting legs should be reduced with the aid of a small file so that they fit easily in the holes in the Veroboard. Care should be taken to ensure that all electrolytic capacitors are fitted with the polarity shown in the diagram, and that heat shunts are used when soldering the transistors in place.

When the assembly is complete, double-check all wiring and ensure that no short-circuits are occuring between the copper strips on the underside of the panel. If satisfactory, the circuit should be given a simple functional check at this stage, connecting the free leads manually to conform to the different modes of operation.

If these functional tests are satisfactory, the rest of the unit can now be made up. Start by cutting and bending the main chassis, using a light gauge aluminium, as shown in Fig. 6 (*a*), and then make up the front panel, using a medium gauge aluminium, as in Fig. 6 (*b*).

When the front panel has been cut to size and drilled it may be covered with Fablon or a similar self-adhesive decorative plastic material, the surplus material being cut away with a sharp modelling knife. A material with a light wood-grained finish was used on the prototype.

Next, cut and bend the battery holder, from light gauge aluminium, as shown in Fig. 6 (*c*), and then secure the battery holder to the front panel by means of switch S_1. The battery fits above the switch. Finally, fit the input and output sockets to the front panel, secure the front panel to the main chassis, screw the Veroboard panel to the chassis, and wire up the rest of the unit to conform to the circuit diagram. Note that the Veroboard is held in place by passing 6BA screws through the two holes in the panel and the chassis, fitting rubber or p.v.c. grommets between the chassis and the Veroboard to act both as spacer and insulators.

SETTING UP

Once the assembly of the complete unit is finished, carry out a functional test, then set up the gain of the amplifier stages in the following manner.

Set RV_2 to insert maximum resistance (slider towards 23e) the pre-amplifier to an oscilloscope switch to 0dB, and connect an input signal from a signal generator to the pre-amplifier, the signal frequency being within the range 1 to 100 kc/s. Adjust the signal amplitude to give a reading of 100mV peak-to-peak on the oscilloscope. Now reduce the input signal by 20dB (by means of the switched attenuator on the signal generator) and switch the pre-amplifier to +20bB; then adjust RV_1 to give a reading of 100mV peak-to-peak on the oscilloscope.

Next, reduce the input by a further 20dB and set the pre-amplifier switch to the +40dB position. Adjust RV_2 to give a reading of 100mV once more on the oscilloscope. Repeat the whole procedure, adjusting RV_1 and RV_2 in turn, until no further adjustment is necessary.

If required, a simple check of the input impedance of the unit can be made by the following method.

Connect a signal of between 50 c/s and 200 c/s to the pre-amplifier input from a low impedance source, and adjust the amplitude to give a reading of 100mV on the oscilloscope. Then connect a screened resistance box in series with the input signal and adjust the resistance value until the oscilloscope reading falls to 50mV. The input resistance of the pre-amp is now approximately equal to the value of the series resistance.

Next connect an input of between 100 kc/s and 500 kc/s to the pre-amplifier from a low impedance source, and adjust the amplitude to give a reading of 100mV on the oscilloscope. Then, working by trial and error, connect small values of capacitance in series with the signal input

(*Continued on page* 53)

www.americanradiohistory.com

High-Performance, Double Conversion Communications Receiver—Part—2

by R. MURRAY-SHELLEY, B.Sc.

In this concluding article our contributor discusses the circuits of this highly specialised communications receiver which have not yet been dealt with. Reference is made to some of the diagrams published in last month's issue, and these should be at hand if the description is to be followed fully.

THE A.G.C. SYSTEM

IN THE VERY GREAT MAJORITY OF SUPERHETERODYNE receivers, whether in the domestic or the communications classes, the a.g.c. system tends to be something of a "poor relation" compared with other circuit functions. Often the a.g.c. voltage is derived from a simple diode-resistance-capacitance network, the voltage appearing at the final i.f. transformer anode being rectified and filtered for the purpose. On occasion the system is still simpler, with a single diode performing the functions of detector and a.g.c. rectifier. These simple systems, though adequate for the broadcast type of receiver, and indeed for a communications receiver intended mainly for the reception of a.m. signals only, are not entirely suitable for receivers where the reception of s.s.b. and c.w. signals is a primary consideration. In such cases a more sophisticated system is necessary for reasons which will now be described.

As has been previously explained, the process of demodulating an s.s.b. signal calls for the generation, by the carrier insertion oscillator, of a signal at a frequency very close to that of the final i.f. Furthermore this signal should be produced at a relatively high amplitude. It is, however, virtually impossible to prevent this high-level signal finding its way back into the i.f. amplifier circuits, and appearing at the last i.f. transformer secondary along with the desired received signal. If this happens, the unwanted signal from the c.i.o. will appear to the a.g.c.

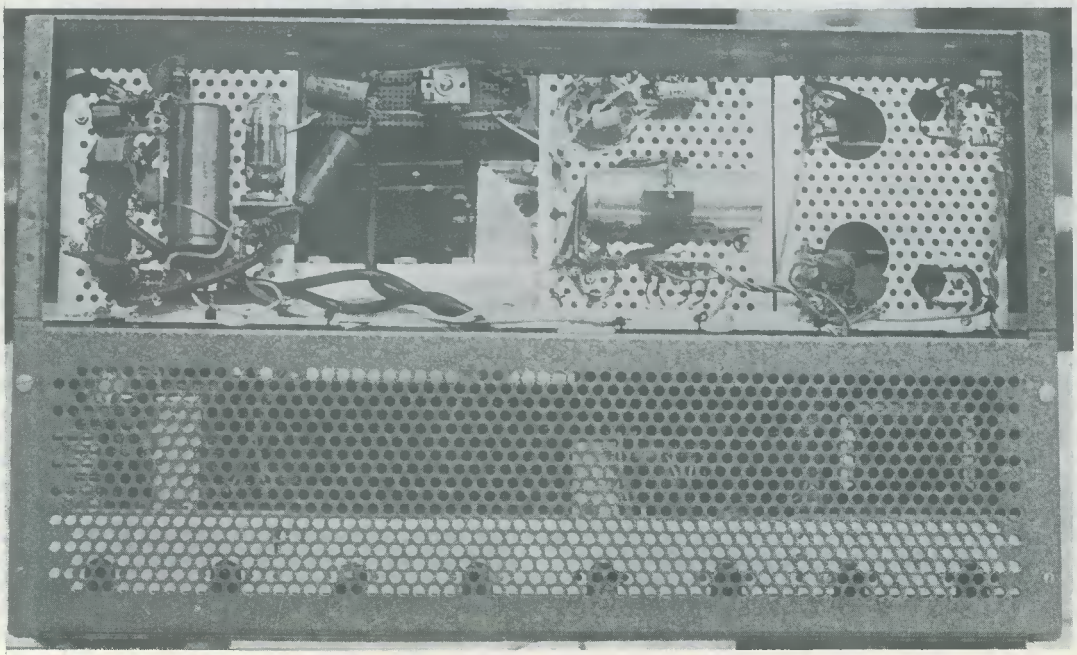

Another under-chassis view, in which the whole of the "front end" underside is visible

www.americanradiohistory.com

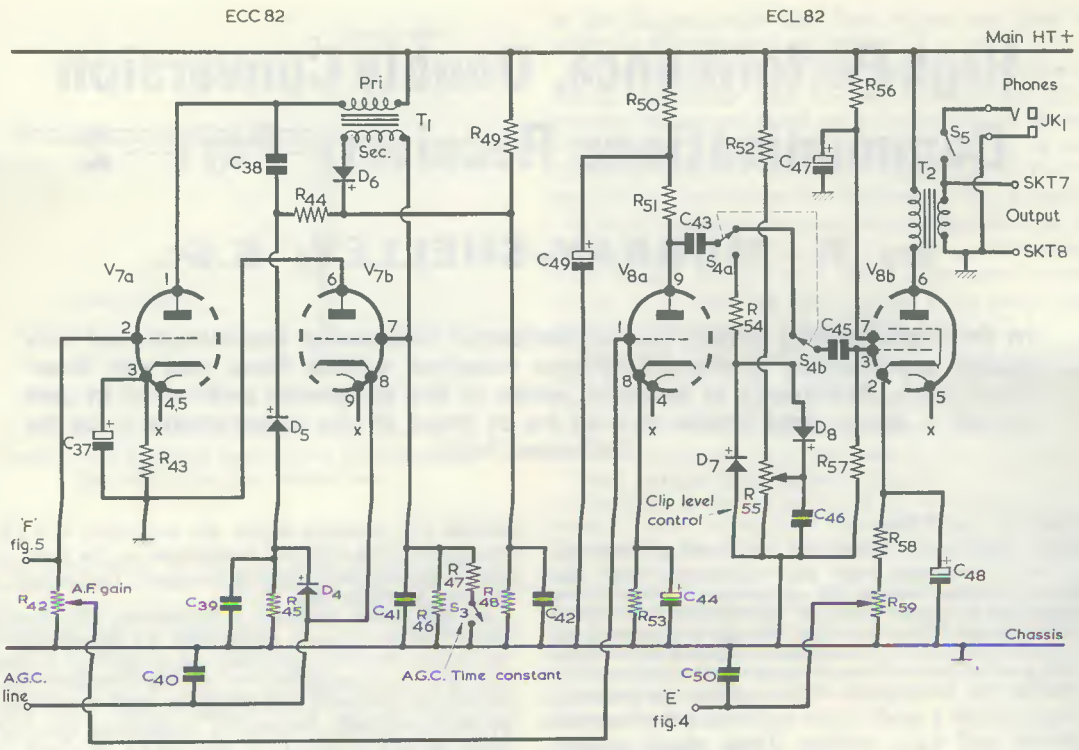

Fig. 7. The a.g.c. and a.f. circuits of the double superhet receiver

circuit to be a signal being received in the normal way. The effect will therefore be the formation of a high a.g.c. voltage, with a drastic reduction in the receiver gain. For this reason it is often the case that the a.g.c. system has to be rendered inoperative when the c.i.o. is in use. Frequently a switch is provided to enable the a.g.c. line to be short-circuited to chassis. Such a practice is, of course, only to be recommended in cases where very simple circuitry is required.

Automatic gain control is just as important and useful when receiving s.s.b. transmissions as when a.m. signals are being handled, and in this receiver an a.g.c. system is incorporated which is equally effective on all types of input signal. Also, it is equipped with switched time constants to further assist the efficient operation of the receiver. The principle of the system is based on rectifying the audio signal which results after demodulation has taken place. The presence of stray voltages introduced by the carrier insertion oscillator, since these are at a frequency above 80 kc/s, does not then present any problems as far as the reduction of gain due to a.g.c. action is concerned.

The characteristics of a system of audio-derived a.g.c., such as the one used here, are a little different from those of a more conventional system. In the first place, there is a tendency for the circuit to follow speech patterns; that is, the gain of the receiver may tend to increase in the pauses between words and phrases. This effect can be reduced to negligible proportions by employing a sufficiently long time constant. The use of a long time constant, however, rather accentuates the phenomenon of "drop-out"—the effect whereby the gain of the receiver continues to be reduced for some time after a disturbance which originally caused gain reduction has passed away. Some compromise is necessary and provision is made for reducing the time constant of the circuit during periods in which there is excessive static disturbance. These slight disadvantages of an audio derived circuit, are, in the final analysis, far outweighed by the increased versatility and usefulness of such a system as compared with more conventional forms.

The circuit of the a.g.c. system is given in Fig. 7. The audio signal from the detectors (the circuits of which were shown in Fig. 5, published last month) is passed to the triode $V_{7(a)}$ where it is amplified. The anode load of this valve consists of the intervalve transformer T_1. The output from the valve is passed via C_{38} to D_5 where it is rectified and passed via D_4 to the a.g.c. line, providing the a.g.c. voltage. In this process C_{40} becomes charged and thus maintains the a.g.c. line voltage after an original disturbance has passed. (The function of D_4 is to prevent the charge on C_{40} from leaking away through R_{45}). The second triode $V_{7(b)}$ is connected between the a.g.c. line and chassis. Due to the rectified output (through D_6) from the secondary of the intervalve transformer being applied to the grid of $V_{7(b)}$, this valve is normally cut off. It will cut on again, however, as soon as the grid reaches near chassis

(*Continued on page 45*)

www.americanradiohistory.com

CUT ALONG THIS LINE

RADIO CONSTRUCTORS DATA SHEET 12

METRIC CONVERSION TABLE

The Table gives conversion details for most commonly encountered English and Metric quantities. For ease of use, direct equivalents based on general English or Metric units are provided rather than multiplying factors. Also given are Metric prefixes.

English to Metric		Metric to English	
1 in.	=2.54 cm	1 mm	=0.03937 in
1 mil (0.001 in)	=0.00254 cm	1 cm	=0.3937 in
1 ft	=30.48 cm	1 m	=3.28 ft
1 yd	=0.9144 m	1 m	=1.094 yd
1 sq. in	=6.45 sq. cm	1 sq. cm	=0.1550 sq. in
1 sq. ft	=0.0929 sq. m	1 sq. m	=10.76 sq. ft
1 cu. in	=16.387 cu. cm	1 cu. cm	=0.0610 cu. in
1 cu. ft	=0.02832 cu. m	1 litre	=61.02 cu. in
1 gallon	=4.546 litre	1 litre	=1.760 pint
1 dram	=1.772 grm	1 grm	=15.43 grain
1 oz	=28.35 grm	1 grm	=0.5643 dram
1 lb	=453.6 grm	1 grm	=0.03527 oz
	=0.4536 Kg	1 Kg	=2.205 lb
1 ton	=1,016 Kg	1,000 Kg	=0.9842 ton
1 metric ton	=1,000 Kg	1,000 Kg	=1 metric ton
1 horse power	=746 watt	1 kilowatt	=1.341 horse power
1 lb/sq. in	=70.31 gr/sq. cm	1 Kg/sq. cm	=14.223 lb/sq. in

Metric Prefix	Symbol	Multiplier	Metric Prefix	Symbol	Multiplier
pico	p	10^{-12}	deci	d	10^{-1}
nano	n	10^{-9}	kilo	K	10^{3}
micro	μ	10^{-6}	mega	M	10^{6}
milli	m	10^{-3}	giga	G	10^{9}
centi	c	10^{-2}	tera	T	10^{12}

www.americanradiohistory.com

RECENT PUBLICATIONS

TRANSISTOR AUDIO AMPLIFIERS. By S. J. Hellings. 347 pages, 6 x 9 in. Published in the Philips Technical Library series (U.K. distributor Macmillan & Co. Ltd.) Price £5 4s. 0d.

"All this [the possibilities offered by d.c. coupling between stages] make the designing of transistor amplifiers much more an 'art' than a 'science' . . . Designers can 'let themselves go' more, because of the much greater freedom allowed with transistor circuitry owing to the absence of heaters and hot cathodes." This extract, taken from the chapter on temperature stabilisation, not only shows that the author of the work under review is very comfortably at one with his theme, it also shows his appreciation of his readers' abilities. Here, we have one engineer passing on useful information to another engineer. Further, the extract helps to demonstrate how excellently the English translation from the original Dutch has been carried out.

"Transistor Audio Amplifiers" is aimed at the designer, the commercial user of transistors and the radio amateur. It covers virtually the whole gamut of transistor a.f. amplifier design and its 29 chapters deal with all relevant subjects from resistor and transistor noise to Nyquist stability diagrams. Although the approach is down to earth and not overly mathematical, a knowledge of mathematics up to operator-j level is desirable (but by no means essential) in the reader. Where required, h-parameters are used for transistor calculations.

This is a useful text-book and it is packed with good practical information.

THE PRACTICAL AERIAL HANDBOOK. By Gordon J. King, Assoc.I.E.R.E., M.I.P.R.E., M.R.T.S. 224 pages, 6 x 9 in. Published by Odhams Books, Ltd. Price 35s.

"The practical Aerial Handbook" deals solely with *receiving* aerials, and principally, though not entirely, with those intended for use with domestic sound and television receiver. As such it offers much basic electronic and mechanical information on the subject and will be of help to the radio dealer, the service engineer, the home-constructor and the amateur operator.

The book commences with a chapter on propagation, then carries on to chapters covering aerial and feeder principles, practical aerial systems, erection and maintenance, signal combining and splitting, signal boosting and booster amplifiers, shared aerial systems, and radio and television interference. Six appendices follow, these dealing with home-constructed TV and f.m. aerials, aerial erection and the law, aerials for colour TV and stereophonic radio, earthing and lightning protection, and DX reception on v.h.f. and u.h.f.

This is a comprehensive range, but the book covers it all in detail. There are many diagrams and photographs; where necessary, commercially manufactured aerial arrays are illustrated to accentuate a particular design feature. We have all, at one time or another, observed the dismal chimney-pot scene where TV aerials sprout up with one or more sections missing. In one chapter Mr. King not only describes the shortcomings in performance that faulty aerials of this nature will give but also includes typical examples as photographed in their roof-top habitat!

Dealing, as it does, with aerials from the long wave ferrite rod to the Band V Yagi, this book is a good successor to Gordon J. King's previous Odhams' titles.

THE ELECTRONIC MUSICAL INSTRUMENT MANUAL. By Alan Douglas, Sen. Mem. I.E.E.E. 382 pages $5\frac{1}{2}$ x $8\frac{1}{2}$ in. (plus 10 large inset diagrams). Published by Sir Isaac Pitman & Sons Ltd. Price 55s.

This is the fifth edition of what has now become a standard reference in the field of electronic musical instruments, and whose first edition appeared in 1947. Additional material in this new edition explains the properties of transistors and their application to electronic musical instruments. There are also, in various chapters, many circuits using semiconductors in different ways.

Electronic musical instruments, including in particular the electronic organ, are a source of great fascination to the electronics enthusiast, whether he be amateur or professional. Much of the audio engineering is devoted to reproducing a sound with the minimum of distortion, but with electronic music the approach is to develop waveforms having a deliberate admixture of overtones in order to obtain the greatest subjective appeal. Apart from novelty devices, "The Electronic Musical Instrument Manual" describes the basic operation of virtually every electrical instrument currently in production or which has been in production in the recent past. The contents also include details on conventional multinote instruments, on the production and mixing of oscillations, and on amplifiers and loudspeakers. In addition, over 100 pages are devoted to a chapter on commercial electronic instruments, this providing an intriguing insight into the ingenuity which has been exercised in this sphere. Of interest to home-constructors is a further chapter of some 48 pages which deals with experimental methods of creating electronic music.

www.americanradiohistory.com

continued from page 42

potential which it does as the result of C_{41} discharging through R_{46} (and R_{47} if S_3 is closed). The time constant of the circuit formed by R_{46} and C_{41} thus controls the time for which the a.g.c. line negative voltage is maintained after the end of a disturbance since, as soon as the triode $V_{7(b)}$ conducts, the charge on C_{40} is removed through this valve. One constructional point which should be made at this time is that the diodes used for D_4 to D_6 inclusive *must* be of the silicon variety, and not germanium since the latter does not, in general, provide a high enough reverse resistance in this very high impedance circuit. If desired, D_4 to D_6 inclusive could be Ferranti ZS7 or Texas 1S121 instead of the types given in the Components List. Even power diodes, such as the BY100, could be employed. A delay for both the D_6 and D_5 circuits is provided by R_{49} and R_{48}.

The 1:3 transformer, T_1, is wired such that the secondary (having the greater number of turns) connects to the D_6 circuit.

It will be noted that, with the present system, there is no necessity to provide a switch to cut out a.g.c. The setting of the audio gain control, R_{42}, does not affect the operation of the a.g.c. circuit, owing to the particular circuit configuration adopted.

THE AUDIO STAGES

The audio amplifier and output stages employed in the receiver are fairly conventional. A triode-pentode type ECL82 is used to provide the necessary functions. With the rather low high tension voltage used in this receiver, the ECL82 provides about 1.5 watts of audio power, this being more than sufficient for the purpose in hand. An audio noise limiter circuit is incorporated between the two audio stages which may be switched in or out as required. This again is conventional in form, consisting of a variable clipping level circuit using the germanium diodes D_7 and D_8.

The reference voltage for the S-Meter is taken from the cathode circuit of $V_{8(b)}$, as shown in Fig. 7. Referring to Fig. 4 (published last month) it will be seen that the cathode of the a.g.c. controlled first i.f. valve, V_1, is connected to the base transistor TR_1, the S-Meter being connected in the transmitter emitter circuit. TR_1 than functions as an emitter follower, causing the S-Meter to follow variations in the cathode voltage of V_1. The transistor ensures that there is sufficient current to operate the meter and also prevents reverse readings. The preset potentiometer, R_{59}, is set up so that the meter gives full-scale deflection at maximum signal input. Although S-Meter deflection is obtained by way of an audio-derived a.g.c. system, indications are still proportional to signal strength if the assumption is made that all modulation depths are equal.

Provision is made for the connection of a speaker of 3Ω impedance (via a 55:1 output transformer), or of low impedance headphones. Due to the liberal smoothing incorporated in the design, the overall hum level is of a low order.

POWER SUPPLIES AND AUXILIARY CIRCUITS

The circuits of the power supply system is given in Fig. 8. Little comment is required here since the circuit is quite usual. Silicon diodes D_9 and D_{10} are used for rectification, thus obviating the losses and heat generation which are associated with thermionic rectifiers. A double section L-C filter provides the filtering required and the inductance input to this filter ensures a high degree of regulation. Stabilised supplies are required by the various oscillators in the receiver, and to provide these the gas filled regulator tube V_9 is included.

A low voltage d.c. supply is incorporated in the receiver to operate the "standby" circuits and to operate external aerial changeover relays and the like, should the need arise. This supply is provided by T_4, D_{11} and C_{54}. The low voltage supply could be dispensed with if desired, though some modification would then have to be made to the "standby" circuit. This "standby" circuit is shown as a part of Fig. 3 (published last month) and it enables the receiver to be muted when S_6 is placed in the appropriate position. When S_6 is closed, relay RL_1 energises,

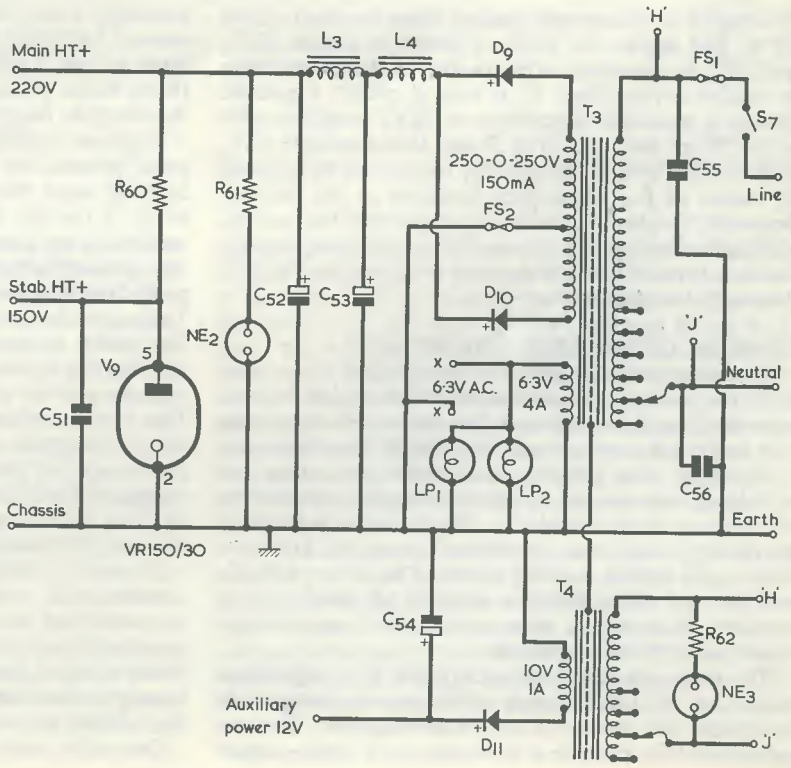

Fig. 8. The power supply circuits

www.americanradiohistory.com

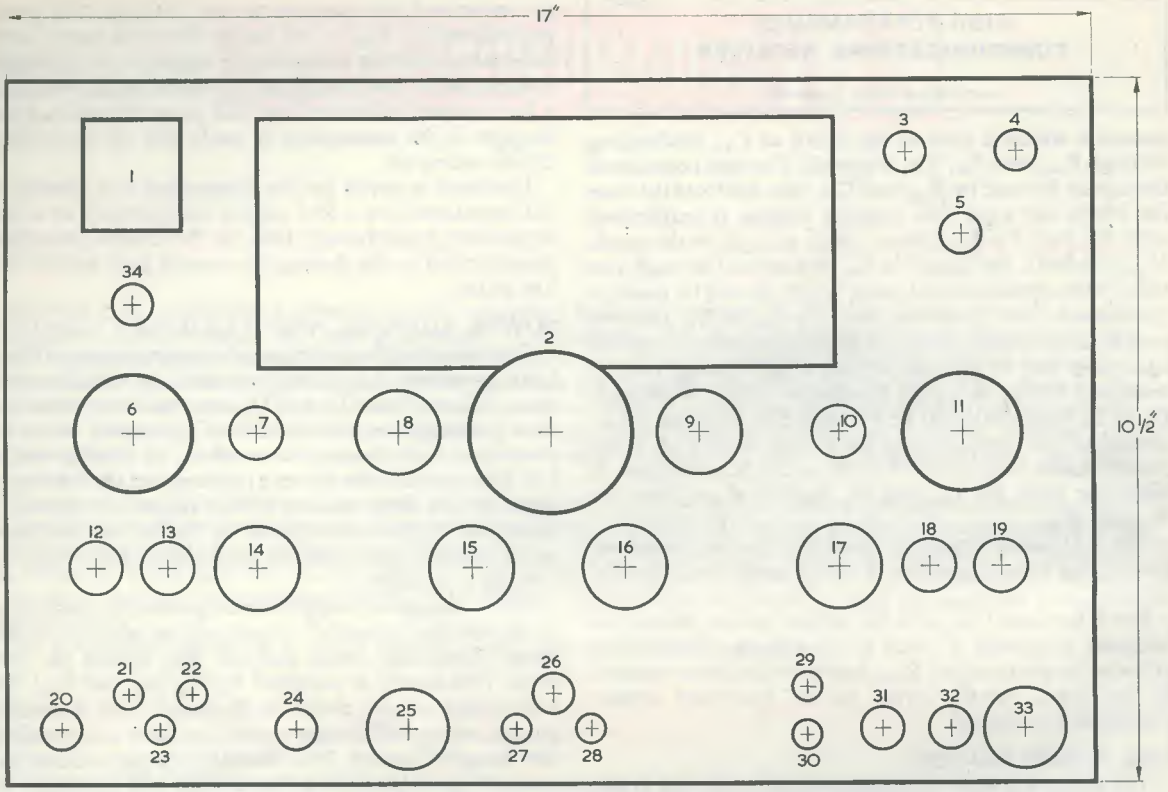

Fig. 9. A suggested front panel layout. The accompanying Table lists the controls and sockets, etc., shown here

whereupon its changeover contact takes the short-circuit off R_6 and applies the auxiliary power to sockets SKT_5 and SKT_6 for operating an external aerial changeover relay or similar device. Since R_6 is now in circuit, a positive voltage is applied to the cathode of the r.f. amplifier valve in the "front end" unit (Fig. 2) and to the cathode of V_3 (Fig. 5). The level of this positive voltage can be adjusted by means of R_6, which then functions as the Standby Sensitivity Control. R_6 can be adjusted so that the receiver, although muted, is still responsive to very strong signals, and may thus be used as a monitor when operated in close proximity to a transmitter.

CONSTRUCTION AND ADJUSTMENT

It is not proposed to give any very detailed instructions as to the manner of construction which should be used when building this equipment. It is the writer's experience that individual constructors, very rightly, have their own ideas about this subject, particularly when they are sufficiently experienced to contemplate the construction of a receiver of this complexity. The prototype as has been previously stated, was constructed using the Lektrokit chassis and cabinet building system. This is very suitable and its use minimises the amount of metalworking required. Naturally, a more conventional arrangement could be adopted if so desired.

The prototype employed a Lektrokit 17 x 10½in front panel Cat. No. LK-411, each of the two sides being made up of four side plates, LK-301, bolted together. The two side assemblies provide a wide variety of ready-pierced mounting holes for Lektrokit Chassis Rails, to which various Lektrokit Chassis Plates, as required, may be fitted in turn. Lektrokit chassis parts are available from Home Radio (Components) Ltd., whose catalogue shows the complete range with illustrations.

Whatever method of construction is decided upon, the usual precautions have to be taken. All long signal-carrying leads should be screened, using coaxial cable in the r.f. circuits. Care should be taken to ensure that the oscillators are kept away from draughts, and also, that they are not subjected to overheating. A suggested front panel layout is given in Fig. 9, whilst the accompanying Table lists the various controls, sockets and terminals. The socket at position 25 is an auxiliary output socket carrying the 12 volt supply from T_4 and D_{11}, and may be used to provide power for external relay circuits, etc. This is quite optional and the socket is not shown in the circuit diagrams or the Components List. In the photograph of the front panel there is an additional coaxial socket to the left of the headphone jack at position 24. This is also optional, and its centre contact merely connects to the adjacent socket, SKT_3.

Further information as to the nature of the constructional method can be obtained from the accompanying photographs. It is possible to carry a number of the small auxiliary circuits on pieces of Paxolin board attached directly to the controls on the front panel. Examples of circuits which may be treated in this way are the S-Meter system and the audio noise limiter circuit.

Once the receiver has been completed and tested

www.americanradiohistory.com

TABLE

RECEIVER CONTROLS (See Fig. 9)

Number	Description	Part Number
1	"S" Meter	M_1
2	Tuning slow motion drive assembly	—
3	Mains warning lamp	NE_3
4	Main H.T. warning lamp	NE_2
5	"Standby" circuit warning lamp	NE_1
6	Carrier insertion oscillator frequency control	C_{35}
7	A.G.C. time constant switch	S_3
8	Circuit function switch (detector)	S_1
9	Bandswitch	—
10	Calibration oscillator on/off switch	S_2
11	R.F. amplifier input circuit trimmer	C_1
12	Phones/Speaker switch	S_5
13	Audio noise limiter in/out switch	S_4
14	Audio noise limiter clip level control	R_{55}
15	Audio frequency gain control	R_{42}
16	Intermediate frequency gain control	R_{23}
17	Radio frequency gain control	R_5
18	"Standby" switch	S_6
19	Mains supply on/off switch	S_7
20	Aerial input co-axial socket	SKT_1
21	Aerial input socket	SKT_2
22	Aerial input socket (connected to A1 on front end unit)	SKT_3
23	Earth Socket	SKT_4
24	Headphone jack socket	JK_1
25	Auxiliary power output socket (optional)	—
26	"Standby" sensitivity control	R_6
27	"Relay" socket (for control of external circuits with receiver on "standby")	SKT_5
28	As (27) above	SKT_6
29	Speaker output sockets	SKT_7
30	As (29) above	SKT_8
31	Fuse (Mains H.T. circuit)	FS_2
32	Fuse (Mains supply)	FS_1
33	Mains input socket	—
34	"S" Meter zero-set control	R_{59}

functionally, it is necessary to accurately align it. Due to the fact that the "front end" unit is supplied pre-aligned, this is by no means as difficult as it appears at first sight. It is possible to align the receiver without test instruments, though naturally these are of great assistance if they are available. Particularly useful would be a small oscilloscope to be used as a level indicator, though a valve voltmeter could also be employed. As an alternative, if no such equipment is to hand, alignment may be carried out using the S-Meter as a level indicator or even "by ear".

The prototype was aligned as in the following manner and it has been suggested that this procedure be used by the reader. After the set has been completed it should be possible to receive some sort of signal bearing in mind the fact that many of the components have already been adjusted prior to their inclusion in the receiver. A weak signal should be chosen and the 85 kc/s i.f. transformers, starting with the secondary of IFT_4, adjusted for peak signal. Do not attempt to "stagger" the tuning of these transformers—adjust to a peak. The 1.6 Mc/s i.f. transformers may then be similarly adjusted, and the inductor in the second frequency changer anode circuit (L_1 in Fig. 4) trimmed for best results. Notice that in all of this adjustment procedure the trimmers contained in the "front end" unit have not been adjusted in any way. Also, the warning remarks concerning the alignment of this unit which were given in the preceding article must not be disregarded. When the major portion of the trimming procedure has been completed the aerial circuit trimmers in the "front end" unit may be adjusted to suit the antenna which is to be used. If the aerial trimmer C_1 has been fitted, then the following procedure should be carried out.

A weak station not subject to fading should be tuned in and C_1 adjusted to about the centre of its range. The appropriate aerial trimmer should then be adjusted for best response. (These trimmers are contained in the compartment nearest the front of the unit). This sequence should be repeated on all bands. The adjustment of the aerial trimmers should be carried out with the aerial which is to be finally used connected into the receiver.

The receiver may next be calibrated in the normal way.

www.americanradiohistory.com

COMPONENTS (Figs. 7 and 8)

Resistors

(All fixed values ½ watt 10% unless otherwise stated)

R_{42}	500kΩ potentiometer, log
R_{43}	820Ω
R_{44}	470kΩ
R_{45}	470kΩ
R_{46}	4.7MΩ
R_{47}	1MΩ
R_{48}	3.3kΩ
R_{49}	100kΩ
R_{50}	33kΩ
R_{51}	100kΩ
R_{52}	150kΩ
R_{53}	2.2kΩ
R_{54}	47kΩ
R_{55}	25kΩ potentiometer, linear, 1 watt
R_{56}	2.2kΩ 1 watt
R_{57}	220kΩ
R_{58}	680Ω
R_{59}	100Ω preset potentiometer, panel mounting, linear, 1 watt
R_{60}	2kΩ 5 watt, wirewound
R_{61}	Series resistor to suit NE_2 (for 220 volts)
R_{62}	Series resistor to suit NE_3 (for mains voltage)

Capacitors

(All values 500V wkg. unless otherwise stated)

C_{37}	25μF electrolytic, 25V wkg.
C_{38}	0.1μF polyester, 400V wkg.
C_{39}	0.01μF ceramic
C_{40}	0.1μF polyester, 250V wkg.
C_{41}	0.1μF polyester, 250V wkg.
C_{42}	0.1μF polyester, 250V wkg.
C_{43}	0.01μF ceramic
C_{44}	25μF electrolytic 25V wkg.
C_{45}	0.01μF ceramic
C_{46}	0.47μF polyester, 250V wkg.
C_{47}	8μF electrolytic, 350V wkg.
C_{48}	50μF electrolytic, 50V wkg.
C_{49}	8μF electrolytic, 350V wkg.
C_{50}	0.01μF ceramic
C_{51}	0.1μF polyester, 250V wkg.
C_{52}	32μF electrolytic, 350V wkg.
C_{53}	32μF electrolytic, 350V wkg.
C_{54}	250μF electrolytic, 15V wkg.
C_{55}	0.1μF paper, 250V A.C. wkg.
C_{56}	0.1μF paper, 250V A.C. wkg.

Inductors

L_3	Smoothing choke, 10H 150mA
L_4	Smoothing choke, 10H 150mA
T_1	Intervalve transformer, ratio 1:3
T_2	Speaker transformer, 55:1
T_3	Mains transformer. Secondaries: 250–0–250V 150mA; 6.3V 4A.
T_4	Mains transformer. Secondary 10V (approx) 1A.

Valves

V_7	ECC82
V_8	ECL82
V_9	VR150/30

Semiconductors

D_4	DD006 (or similar silicon diode)
D_5	DD006 (or similar silicon diode)
D_6	DD006 (or similar silicon diode)
D_7	OA81
D_8	OA81
D_9	BY100
D_{10}	BY100
D_{11}	BYZ13 (or similar)

Switches

S_3	s.p.s.t. toggle
S_4	d.p.d.t. toggle
S_5	s.p.s.t. toggle
S_7	s.p.s.t. toggle

Lamps

NE_2	Miniature neon lamp assembly. (If series resistor is incorporated, R_{61} may be omitted.)
NE_3	Miniature neon lamp assembly. (R_{62})

Sockets

JK_1	Headphone jack
$SKT_{7,8}$	Terminals with top socket. Belling-Lee type L.759 or similar

Fuses

FS_1	1A cartride fuse, with holder
FS_2	250mA anti-surge cartride fuse, with holder

Knobs

2 knobs (for R_{42} and R_{55})

Metalwork

As required. Lektrokit Chassis System parts are available from Home Radio (Components) Ltd.

It should be noticed that the tuning capacitors used on the "Qoilpax" amateur band unit are capable of continuous rotation and thus it is possible to place the high frequency end of the band physically at the right or at the left hand end of the tuning scale. The carrier insertion oscillator coil (L_2 in Fig. 6) should be adjusted to produce zero beat with the oscillator capacitor at about the centre of its range. This adjustment should only be carried out after the receiver has thoroughly warmed up, as should all the alignment and calibration adjustments.

GRAMPIAN TV ORDERS MARCONI CAMERAS

Grampian Television Ltd., has ordered three Marconi Mark V Image Orthicon Camera Channels to re-equip the existing monochrome facilities in its Aberdeen Studios.

Together with the three black and white Mark V cameras, each equipped with a servo-controlled zoom lens, the contract includes a single and a dual synchronising pulse generator, two grey scale generators and two pulse and bar generators, one for monochrome, the other for PAL colour.

Mark V cameras have now been sold overseas in fourteen countries, including the United States, Canada, Russia and Czechoslovakia. Grampian Television is the fifth British company to buy them.

www.americanradiohistory.com

UNDERSTANDING RADIO

Mixer Valves

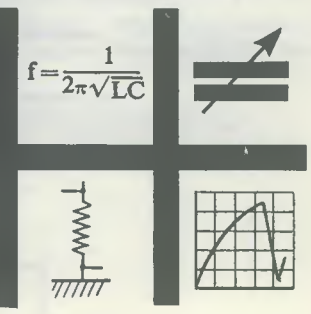

by W. G. Morley

IN LAST MONTH'S ARTICLE IN THIS SERIES WE CONCLUDED our examination of the manner in which the signal frequency and oscillator tuned circuits of a superhet are tuned by separate sections of a ganged capacitor such that a fixed difference frequency is given between their two resonant frequencies at all settings of the tuning capacitor. After this, we discussed the forms of interference which are peculiar to the superhet, and dealt with second channel interference and i.f. breakthrough.

We now turn our attention to the mixer valves employed in current valve superhets.

GRID LEAK MIXER

When, in the last April issue, we introduced the subject of the superhet, it was first of all necessary to show that when two signals of different frequency are applied to a mixer valve the output at the anode contains a frequency which is equal to the difference between the two input frequencies. This difference frequency is the intermediate frequency of the superhet and is applied to the highly selective i.f. amplifier before being passed to the detector for reclamation of the modulating audio frequency.

Since we were already familiar with the grid leak detector we used a valve of this type for the explanation of mixer operation, and we were able to make the important point that, for useful energy at the difference frequency to be obtained at the anode, the mixer valve must offer *distortion* so that the average value of the difference frequency is other than zero. Because of the inherent rectifying action between grid and cathode in a grid leak detector there is a considerable distortion of the difference frequency resulting from the two input signals applied to its grid, whereupon this may be extracted at a useful level at the anode.

We employed a triode to demonstrate the mixer action but the same result would have been given had we used a pentode connected as a grid leak detector. The pentode would have a grid leak and capacitor in just the same manner as the triode whilst, following normal pentode operating practice, the screen grid would connect to a fixed h.t. positive potential and the suppressor grid to the cathode. The difference frequency would, again, be present at the anode.

In the previous example we obtained the requisite distortion by using the grid leak detector circuit. We would also obtain the necessary distortion if the signal and oscillator frequencies were applied directly to the control grid and the valve was biased (say by returning the cathode to a sufficiently high positive potential) so that it was at, or near, cut-off and gave non-linear amplification. The grid leak circuit is rather more convenient to arrange in practice, but this alternative method of operation would also enable a useful difference frequency to appear at the anode.

Mixers based on grid leak detector principles are used in all standard valve receivers intended for television or f.m. reception. In these receivers an r.f. amplifier stage appears between the aerial and the mixer, and provides the secondary function of preventing the oscillator voltage from being fed back to the aerial input where it could be radiated by the aerial and cause interference with neighbouring receivers.

In valve television receivers covering Channels 1 to 13 it is normal to have a separate local oscillator valve to feed the mixer, but at u.h.f. channels a single triode functions both as oscillator and mixer. F.M. sound receivers, which cover the somewhat limited frequency range of 87.5 to 100 Mc/s, may be designed with a separate oscillator if desired, but the current practice in commercially manufactured f.m. sets is to use a single valve (usually a triode) to carry out both functions. We will deal briefly with the circuit principles involved here, after which we shall turn to the mixer circuits employed in long, medium and short wave receivers.

A typical basic self-oscillating mixer circuit for f.m. reception frequencies is shown in Fig. 1 (*a*). In this diagram we have a triode valve whose anode couples, via C_5, to the tuned circuit given by L_2 and C_4 in parallel. Winding L_1 couples inductively to L_2 and connects, by way of grid capacitor C_3 and grid resistor R_1, to the grid of the triode. Thus the circuit, as described so far, is a simple shunt-fed tuned anode oscillator having grid leak bias,[1] but with the slight complication that the grid coil couples to chassis via C_2 instead of connecting directly.[2] Since we require to take off the difference frequency (i.e. the intermediate frequency for the receiver) at the anode, we insert here a parallel tuned circuit which is resonant at the intermediate frequency. Actually, this tuned circuit is part of an *i.f. transformer* and its coil couples inductively to a second coil in the transformer which, with its parallel capacitor, is also resonant at the intermediate frequency.

[1] This type of oscillator was discussed in "Understanding Radio" in the May 1966 issue.

[2] If, in a practical version of this circuit, there is no d.c. path between L_1 and the chassis, C_3 can be omitted and the top end of L_1 connected direct to the grid. The function of grid capacitor would then by carried out by C_2 and C_1.

www.americanradiohistory.com

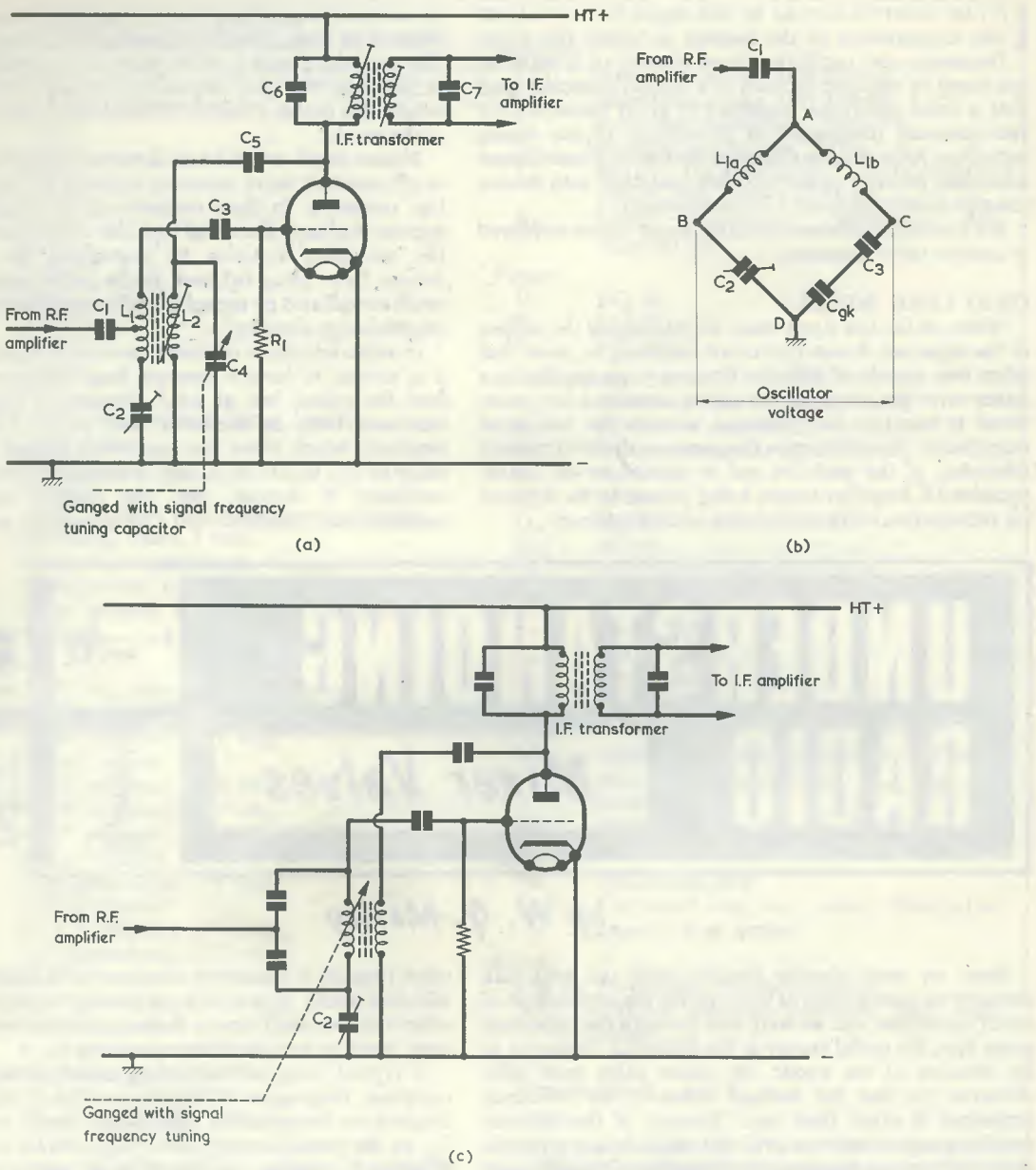

Fig. 1 (a). A basic self-oscillating mixer circuit, as employed in f.m. receivers. For clarity, padding components are omitted.
(b). The circuit around L_1 may be re-drawn in the manner shown here. If C_2 is adjusted to have the same value as C_{gk} and C_3 in series, negligible oscillator signal is fed back to the r.f. amplifier
(c). An alternative approach to the self-oscillator mixer of (a). C_2 carries out the same function as in the previous circuit

The signal appearing across this second tuned circuit is finally applied to the following intermediate frequency amplifier. Returning to the oscillator, the impedance presented at the anode by the first tuned circuit of the i.f. transformer is sufficiently high, at oscillator frequency, to enable the oscillator to run satisfactorilly.

The signal frequency input from the r.f. amplifier is applied to a centre tap in the grid coil, L_1, whereupon both oscillator and signal frequencies are fed to the grid of the triode. This then provides the difference frequency at its anode in the manner we have already discussed.

If we now turn our attention to the circuit around L_1 we will find that we can re-draw it in the manner shown in Fig. 1 (*b*). This depicts a *bridge circuit*, in the top half of which coil L_1 is shown being split into two equal halves, $L_{1(a)}$ and $L_{1(b)}$. At the lower half of the bridge we have capacitor C_2 and, opposite this, capacitor C_3 in series with C_{gk}, which represents the internal capacitance between

www.americanradiohistory.com

grid and cathode of the triode. Should C_2 be adjusted such that it has the same capacitance as the combination of C_3 and C_{gk} in series, then the bridge is said to be *balanced.* In consequence, whilst the full oscillatory voltage appears across points B and C, negligible oscillatory voltage appears across points A and D. Negligible oscillator voltage is therefore fed back to the r.f. amplifier, and the risk of oscillator frequency radiation via the aerial is much lower than would occur if we relied on the r.f. stage on its own to prevent such radiation.[3]

The basic mixer circuit shown in Fig. 1 (*a*) is very frequently encountered in commercially manufactured f.m. receivers. Some variations may be met, of which the most common consists of having a tuned grid oscillator with the grid coil tuned by two equal-value capacitors in series, as in Fig. 1 (*c*), instead of having a tuned anode coil. The two capacitors across the grid coil provide a "centre tap" into the grid tuned circuit in similar fashion to the physical centre-tap in the coil of Fig. 1 (*a*). To ease tuning difficulties, oscillator frequency is in this case usually controlled by permeability tuning (i.e. an iron dust core is caused to move in and out of the coil to vary its inductance as the receiver tuning is adjusted). Often, the capacitor across the first coil of the i.f. transformer, shown as C_6 in Fig. 1 (*a*), is omitted. This first coil is then tuned by the stray capacitances in the circuit.

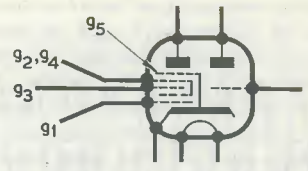

Fig. 2. The symbol for a triode heptode valve, with the heptode grids numbered

"mixer in an f.m. receiver". Most commercially manufactured sets are of the f.m./a.m. type and are capable of receiving medium and long wave signals as well as f.m. signals. In this case the mixer valve appears in the f.m. *tuner unit* of the receiver, this being brought into operation when the set is switched for f.m. reception.

An effect which needs to be introduced at this stage is that of *pulling*. Pulling occurs when, due to insufficient isolation between the signal frequency and oscillator tuned circuits at the mixer, the oscillator frequency is "pulled" away from the frequency dictated by the components in its tuned circuit towards the signal frequency. This effect is most troublesome when the two frequencies are close together. With f.m. receivers, however, the standard intermediate frequency is 10.7 Mc/s

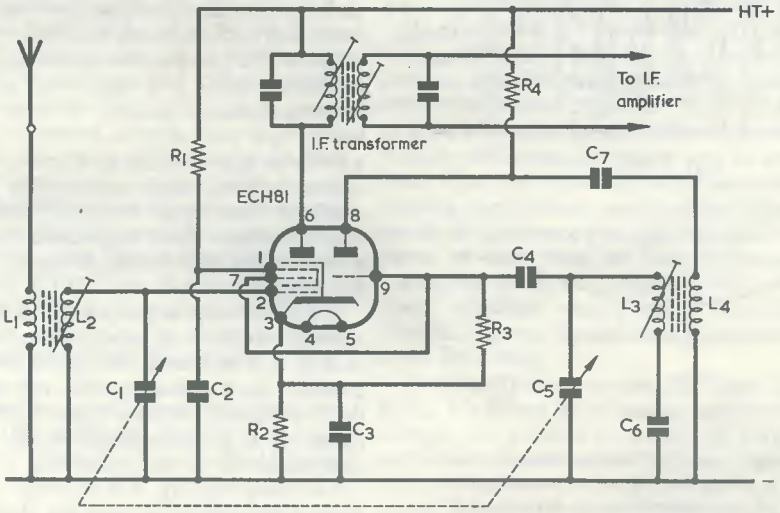

Fig. 3. A practical mixer stage for long, medium or short waves, using an ECH81 triode heptode

In practice, it is a little difficult to ensure that the bridge circuit represented by Fig. 1 (*b*) remains exactly balanced at all oscillator frequencies. However, the limited tuning range required for f.m. reception enables a reasonable balance to be achieved over the small frequency band covered, so that only a small level of oscillator signal is fed back to the r.f. amplifier. Figs. 1 (*a*) and 1 (*c*) show a trimmer for C_2, and this can be adjusted for optimum balance, say at the centre of the f.m. band. Practical receivers normally employ a fixed capacitor here, however, it having a value which provides reasonable balance despite tolerances in the other components in the circuit.

We have inferred that the valve in Figs. 1 (*a*) and (*c*) is a

[3] For simplicity, it has been assumed that the capacitance to chassis offered by the valve grid is C_{gk} only. Due to stray capacitance and other effects the capacitance will be somewhat larger in practice, but this fact does not, of course, alter the basic functioning of the circuit.

and this ensures that there is sufficient spacing between signal and oscillator frequencies at the mixer for the pulling effect to be absent. A complementary factor is that the signal frequency tuned circuits provided for frequencies in the f.m. band usually have relatively low Q factors.

MIXERS WITH TWO CONTROL GRIDS

As a historic comment, it is interesting to note that when the superhet receiver was first introduced the mixer valve generally employed was a triode (or tetrode) operating as a grid leak detector, or otherwise biased to provide distortion. The reason for this choice was, quite simply, that more complex valves were not at that time available. At the reception frequencies then used for communication, this type of mixer offered several disadvantages. One of these was the pulling effect just referred to, this resulting from oscillator and signal

www.americanradiohistory.com

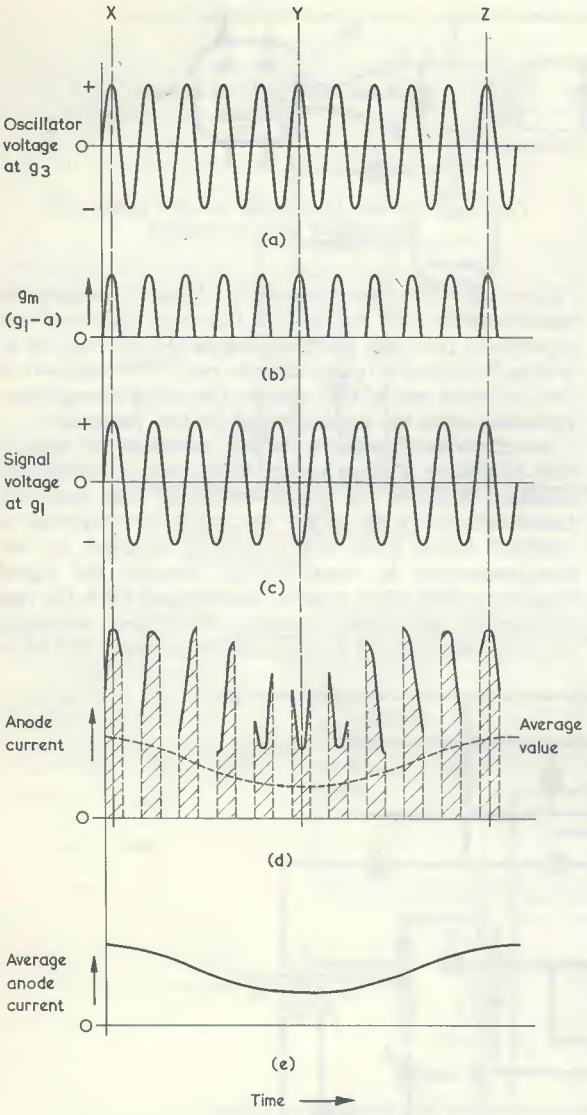

Fig. 4. Illustrating how a difference frequency is obtained from a mixer having two control grids. The formation of the waveforms is explained in the text

frequency tuned circuits being coupled to a single grid circuit, whilst another was radiation of oscillator frequency via the aerial unless an efficient r.f. stage was provided. Both these troubles were overcome by the development of special mixer valves having two control grids screened from each other. With these valves, the oscillator frequency is applied to one control grid and the signal frequency to the other, whereupon the screening ensures that pulling is reduced to a low level, as also is radiation of the oscillator frequency via the aerial. Such valves have enabled very many commercial domestic superhets to be manufactured which cover the long, medium and short wave bands without the necessity for an r.f. stage. They are also used to excellent effect in more complex receivers of the communications class operating at frequencies up to some 40 Mc/s or so. Above these frequencies, in the f.m. and TV bands, mixer valves having two control grids tend to introduce too high a noise level and it is an ironic fact that such valves have, in their turn, been superseded at these frequencies by the grid leak mixers they themselves supplanted at the lower frequencies.

Valves with two control grids intended specifically for mixer applications have undergone considerable development since they first appeared around the early 1930's and we shall concern ourselves here with the types employed in current British mains-powered valve receivers intended for reception on long, medium and short waves. It is nowadays virtually standard practice in these receivers to employ a *heptode* which is combined with a separate triode in the same envelope to form a *triode heptode* valve. The triode is merely an oscillator, whilst the heptode section is the mixer proper. The term heptode derives from the Greek *hepta* (seven) and indicates that there are seven "useful electrodes". As may be seen from the circuit symbol for a triode heptode shown in Fig. 2, there are the cathode, five grids and the anode. In the heptode it is intended that the signal frequency voltage be applied to g1 (the first grid from the cathode) whilst the oscillator voltage is applied to g3. Grids g2 and g4 are connected together internally, and function as screen grids, whilst g5, internally connected to cathode, acts as a suppressor grid. These last two functions are the same as those of the screen grid and suppressor grid in a pentode. At the same time, g2 provides screening between g1 and g3. It will be noted that both the triode and the heptode share a common cathode. The fact that the signal frequency is applied to the heptode control grid nearer the cathode represents an important design feature. In some earlier mixer valves having two control grids it was the oscillator frequency which was applied to the grid nearer the cathode, but these valves suffered from undesirable interaction between oscillator and signal frequency circuits by way of the electron stream. Such interaction is not troublesome with a modern heptode having the signal frequency applied to the first grid.

A typical triode heptode valve is the ECH81, and this is shown connected up in a practical receiver mixer circuit in Fig. 3. The coding for the ECH81 follows European practice, the E indicating a 6.3 volt heater, the C a triode, the H a heptode[4] and the figure 8 a B9A base. The second figure, 1, is a development serial number and has no significance for the user other than identification.

The circuit of Fig. 3 is suitable for long, medium and short wave operation, and we shall deal first with the separate triode oscillator. This couples into a standard shunt-fed tuned grid oscillator, which is tuned by one section of a 2-gang capacitor, C_5, connected across L_3 in combination with the series padding capacitor C_6. C_6 has a value suited to the frequency range it is intended to cover. Since the valve has a single cathode common to both sections, and since the heptode section usually requires cathode bias for correct functioning, the grid resistor, R_3, of the oscillator is returned to this cathode instead of to chassis. The same d.c. operating conditions for the oscillator are then provided as would have occurred if both the triode cathode and its grid resistor had been connected direct to chassis, as has occurred in the previous oscillators we have considered. (Cathode bypass capacitor C_3 has negligible reactance at oscillator frequency). The oscillator voltage is fed to the heptode by connecting the triode grid direct to g3.

[4] The letter H also stands for "hexode", a valve with six "useful electrodes".

www.americanradiohistory.com

The signal frequency from the aerial is applied via coupling winding L_1 to the tuned circuit given by L_2 and the remaining section of the 2-gang capacitor, C_1, and it is then fed to g1 of the heptode. It is intended that we obtain the difference frequency at the anode, and so we connect the first tuned circuit of an i.f. transformer to function as an anode load. The intermediate frequency output from the second tuned circuit of the i.f. transformer is applied to the following i.f. amplifier.

It will be apparent that the heptode valve provides a difference frequency in quite a different manner to that given by a grid leak mixer, in which both input signals are applied to a single control grid. Here, the two signals are applied to separate control grids and the only thing they share in common is that both are capable of varying the magnitude of the electron stream which flows from cathode to anode.

A simple way of explaining how the formation of a difference frequency is achieved in a mixer with two control grids consists of examining the process with frequencies whose waveforms may be easily presented in diagram form. Let us assume that the signal frequency applied to g1 of the heptode in Fig. 3 is 100 kc/s and that the oscillator frequency applied to g3 is 110 kc/s. The desired difference frequency then becomes 10 kc/s.

Fig. 4 (*a*) shows 11 cycles of the 110 kc/s oscillator frequency voltage, as applied to g3. The amplitude of this voltage is sufficiently high to cause the heptode to become cut off on negative half-cycles. When the heptode is cut off it is obvious that the signal voltage at g1 will have no effect on anode current, because anode current is absent during these periods. On the other hand, the g1 signal voltage *will* have an effect on anode current during positive half-cycles at g3, because the valve is then conducting. This relationship is demonstrated by the waveform of Fig. 4 (*b*), which shows the value of mutual conductance between g1 and the anode (i.e. the change in anode current resulting from change in voltage at g1) along the same time scale as Fig. 4 (*a*). As is to be expected from what we have already stated, the mutual conductance is zero during negative half-cycles at g3, but rapidly increases to a maximum value when the waveform at g3 goes positive.

In Fig. 4 (*c*) we introduce, again along the same time scale, 10 cycles of the 100 kc/s signal frequency voltage, these taking up the same amount of time as the 11 cycles of oscillator frequency, whilst in Fig. 4 (*d*) we show the resultant anode current. It is assumed, in Fig. 4 (*d*), that anode current rises abruptly from zero to a value dictated by the signal voltage at g1 as soon as a mutual conductance value greater than zero appears at Fig. 4 (*b*), whereupon the eleven solid lines of Fig. 4 (*d*) represent the sections of Fig. 4 (*c*) which coincide with the presence of a mutual conductance value. (Actually, the increases and decreases in anode current in Fig. 4 (*d*) would be rather more gradual in practice.). At the left of the diagram, along vertical line X, nearly all of the first cycle of signal frequency voltage is reproduced in Fig. 4 (*d*). As we proceed to the right the presence of mutual conductance coincides more and more with the more negative parts of the signal waveform. At line Y, in the centre, the signal voltage waveform is at its most negative during the period of coincidence with mutual conductance, after which it becomes more and more positive again until, at line Z, it has reached about the same value as at X. It is apparent that there is an average value of resultant anode current. This is illustrated in dashed line in Fig. 4 (*d*) and repeated, in full line, in Fig. 4 (*e*). This average anode current starts at a maximum, goes through a peak at minimum, and then returns to its original maximum. It has, in consequence, passed through one cycle.

Thus, by applying 11 cycles of oscillator frequency voltage at 110 kc/s to g3 and 10 cycles of signal frequency voltage at 100 kc/s to g1, we have produced one cycle of average current change at the anode. Since this cycle occupies the same time as 10 cycles at 100 kc/s it has a frequency of 10 kc/s, whereupon we may see that this is the difference frequency between the signal and oscillator frequencies.

The result demonstrated by Fig. 4 can be shown for any other sets of frequencies by following the same series of steps whereupon it follows that, like the grid leak mixer, the mixer having two separate control grids can also produce a difference frequency at its anode. Note that with this second type of mixer it is still necessary to introduce some form of distorting mechanism in order that the difference frequency may be extracted in usable form. Had the oscillator frequency not been capable of altering the mutual conductance between g1 and the anode the difference frequency would have had an average value of zero because both frequencies would have undergone linear amplification. This corresponds to the linear amplifier with a single control grid which we referred to in our discussion of the grid leak detector in the April 1968 issue.

To simplify presentation, the signal frequency voltage in Fig. 4 is shown with the same amplitude as the oscillator voltage. In practice it would be very much lower in amplitude. However, the difference frequency will still appear provided the oscillator amplitude is sufficient to cause changes in mutual conductance from g1 to the anode thoughout its cycle.

NEXT MONTH

In next month's issue we shall continue with the subject of the mixer valve.

WIDE-BAND PREAMP (*continued from page 40*)

to the pre-amplifier, until the reading on the oscilloscope falls to 50mV. The input shunt capacitance of the pre-amplifier is now equal to the value of series capacitance. A value of approximately 2.5pF is to be expected.

If required, it may be possible to slightly improve the frequency response of the unit on the 20dB range by adjusting the value of C_9. This will require a value in the range 220pF to 310pF. The 270pF recommended in the Components List should, however, give results that are satisfactory for most purposes.

When all testing is completed, the unit can be fitted into a suitable case, and a standard 6 x 4 x 2½in chassis, with strengthened corners, was used for this purpose with the prototype. The corner brackets should be of the type illustrated in Fig. 7 and should be drilled to take small self-tapping screws passed through the four mounting holes in the panel. The front panel can be marked, if required, with the aid of "Panel-Sign" lettering, which gives a final neat appearance.

The wide-band pre-amplifier is now complete and ready for use.

www.americanradiohistory.com

In your workshop

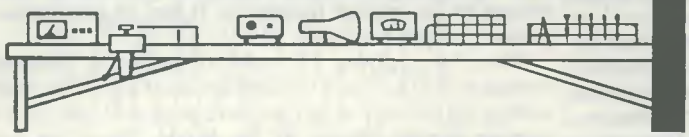

Following their normal custom at August, Dick and Smithy decide to leave the Workshop for a day out, and on this occasion Smithy treats Dick to a drive in the country. He also introduces Dick to some of the basic principles involved in the exciting new science of fluidics, taking the discussion as far as the fluidic NOR gate. Smithy will be returning to the subject of fluidics in next month's episode.

"Blasted women drivers!"

Angrily, Smithy crashed into a lower gear then rapidly regained his previous speed.

"Did you *see* that?" he continued irately. "She just turned right without any signals whatsoever. Ye gods, what's this?"

An enormous lorry bore down on them and Smithy wrenched the wheel violently to the left. A fleeting vision of gigantic wheels rushed past the car windows, then Smithy returned his attention to the road in front of him.

"Dear, oh dear," he announced, "cyclists next!"

With a scream of tyres Smithy swerved past the cyclists, then found himself behind a sedate family saloon.

"Now, what in heaven's name," he growled, "is *this* maniac up to?"

"He's slowing down," said Dick mildly.

"Slowing down?"

"To let a couple of old ladies cross the road."

Fuming, Smithy braked sharply and came to an abrupt halt with his front fender hovering several inches behind the back of the car in front. He beat a restless tattoo on the rim of the steering wheel with his fingers.

OUT IN THE COUNTRY

As the pair watched, the old ladies walked slowly across the road. Suddenly, Smithy gave voice to his impatience once more.

"Dash it all," he snorted, "just *look* at them!"

"For goodness' sake, Smithy, take it easy," remonstrated Dick. "They're trying to get across as quickly as they can."

"But," exploded Smithy furiously, "they're walking across *diagonally*. They should walk across at right angles! These flaming pedestrians seem to think that we motorists have got all the time in the world."

"Well," returned Dick, "haven't we? After all, this *is* our annual afternoon's outing from the Workshop, so what's all the hurry for, anyway?"

"When I'm in my car," retorted Smithy shortly, "I don't like to waste time. Ah, they've crossed over, now."

The engine of Smithy's car roared to a crescendo as he started off and immediately overtook the saloon in front of him.

"Nearly there now, Dick," said Smithy, as the car hurtled along. "We'll just nip down this country lane here on the left."

Smithy swung the wheel hard over and, whilst Dick gritted his teeth and hung on for dear life, shot forwards down a leafy country lane. The car bucked along over the bumpy surface for some five minutes or so, then Smithy steered onto the grass verge at a small clearing. He switched off the engine and all became silent.

In front of them was the gate of a field, and behind this a wide panoramic view of the gentle undulating downs of England. The racket and rattle of the roadway suddenly seemed very far away.

"This will do for a start," said Smithy contentedly. "There's a village near here we'll go to in a while for tea but, in the meantime, let's just have a look at a little bit of the countryside that's still left to us."

Dick turned and studied the Serviceman with interest.

"Do you know," he remarked chattily, "you've completely changed your personality. As soon as you turned that switch off you stopped being a road-hog trying to get past everybody else and reverted to your normal quiet self. It's as though you were Frankenstein's monster with a couple of contacts energised from the car battery!"

"Nonsense," replied Smithy. "You carry on as though I'm one of those types who goes mad as soon as they get into a car. I should remind you that you'll have to go a very long way before you find *another* driver who's as courteous to his fellow road-users as I am."

Dick stared incredulously at Smithy, then turned his attention to the peaceful scene before them. It certainly made a pleasant change from the dusty environment of the Workshop.

"I must say," he remarked appreciatively, "that it's nice to get away from radio and TV for a bit."

It was Smithy's turn to cast an incredulous stare.

"I can hardly credit my ears," he remarked unbelievingly. "On every other August outing we've had up to now you've always been plaguing me with questions about electronics."

"I won't be this time," promised Dick. "In any case what I'm interested in at the moment is rather different from electronics. It's fluidics."

"Fluidics? What do you know about fluidics?"

"Very little," admitted Dick. "Pretty well all I've managed to find out up to now is that quite a bit of fuss is being made about fluidics these days, and that it's supposed to be a fantastic new science which could well take over the computing and logic field from electronics. I've heard, for instance, that you can have logic gates, amplifiers and similar devices using fluidics which do just the same jobs as those based on electronics, and that they all work without any electricity at all!"

"You've got the story partly right," conceded Smithy. "And it *is* true that you get fluidic gates and devices which do the same jobs as their electronic counterparts. But where you're wrong is in assuming that fluidics will eventually

www.americanradiohistory.com

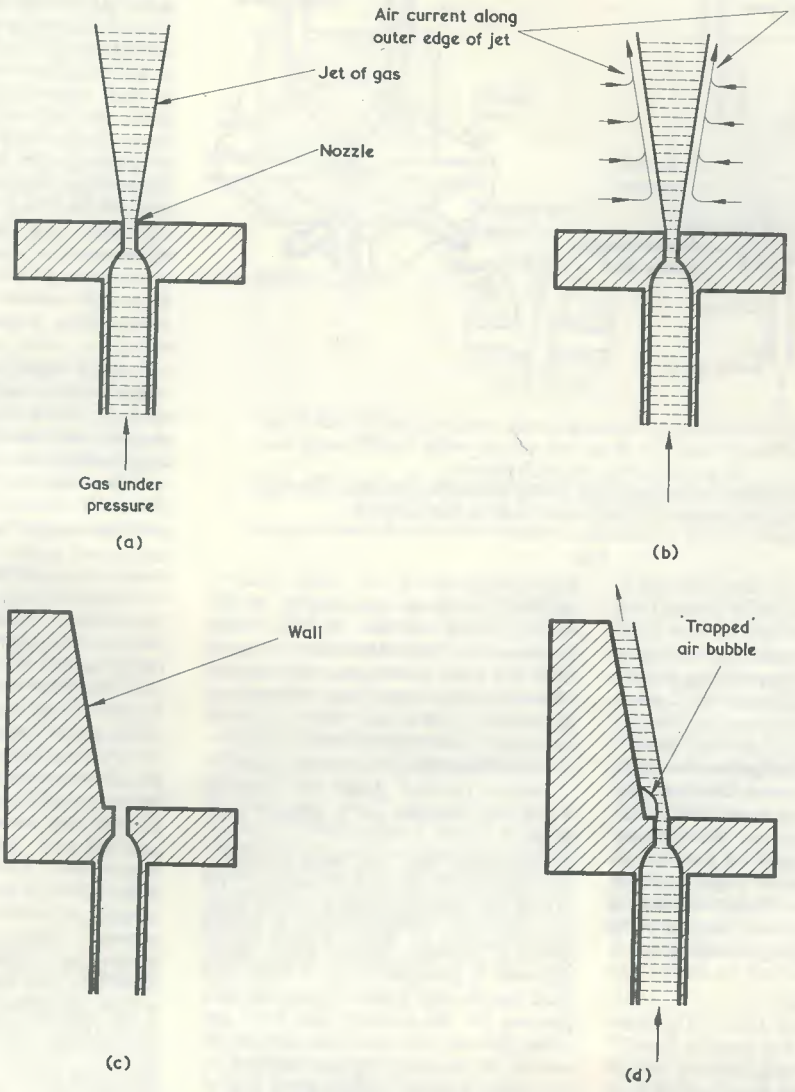

Fig. 1 (a). Passing a gas under pressure through a nozzle causes a jet to appear, as shown here
(b). The outer edges of the jet take up molecules of the surrounding air
(c). Adding a side wall alongside the nozzle orifice
(d). Due to Coanda effect, the gas from the nozzle attaches itself to the side wall instead of flowing straight outwards

take over all the logic jobs that electronics is currently doing. This just won't happen because fluidics is much slower in operation than electronics. Nevertheless, fluidics offer quite a few advantages over electronics and, for applications such as automatic machine control where exceptionally fast logic processes are not required, could well take the place of at least *some* electronic systems."

"What are the advantages with fluidics?"

"The main advantages," said Smithy, "are that fluidic devices can be made even more rugged and robust and, possibly, have an even longer potential life before failure than electronic devices, and that they are particularly reliable in locations where there are very wide variations in temperature or where there is a great deal of vibration. To get the whole picture into focus, however, fluidics is really a slow-speed substitute for electronics; and it will probably be used more and more for automatic process control work where a relatively slow speed of operation can be accepted. The most interesting thing about fluidics is that it is employing all the logic principles which have already been established in electronics, and fluidic devices are available which are capable of acting as monostable flip-flops, bistable flip-flops, NOR gates and all manner of gadgets similar to the ones which are encountered in electronics."

"Blimey," said Dick, impressed. "Still, gates on their own aren't of much use for a complete logic system, and they have to be coupled together in some way. How can you couple fluidic gates and devices to each other if there's no electricity?"

"You couple them together," replied Smithy cheerfully, "with bits of flexible

www.americanradiohistory.com

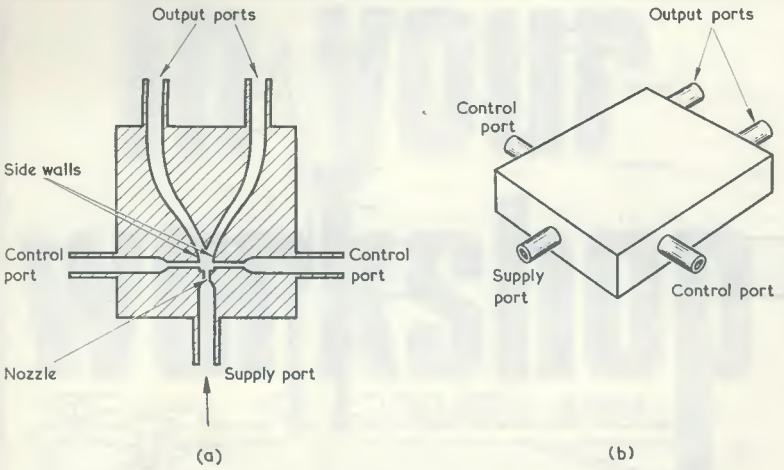

Fig. 2 (a). The internal structure of a fluidic bistable flip-flop. The side walls lead away from the nozzle at a slight angle
(b). The structure of (a) is, in practice, enclosed within a flat rectangular box

plastic tubing!"

"You're joking!"

"No, I'm not. And you power a fluidic logic system by pumping a fluid through it. In most cases, the fluid is nothing other than ordinary air."

"Air? I thought fluidics used liquids."

"You're getting muddled over words," said Smithy. "The word 'fluid' simply means 'something that flows' and a fluid can be liquid or gaseous. Fluidics will work with either liquid or gas, but in practical applications it is gas which is used, and that gas is air. So that, after a fluidic system has been set up it is activated by simply applying air to it under pressure."

COANDA EFFECT

"Gosh," remarked Dick. "Do these fluidic devices have any moving parts?"

"None at all," replied Smithy. "Which is another reason why fluidics is such an exciting new departure for logic applications. Some of the electronics manufacturers are maintaining a very lively interest in fluidics because it is basically so similar to their own established electronic logic systems, and because all the logic know-how acquired with electronics can be directly applied to fluidics."

"I see," said Dick ruminatively. "Well, let's get down to practical things. How, for instance, does an individual fluidic device work?"

"It works by taking advantage of the properties of a jet fluid when it leaves," the aperture in a nozzle under pressure," said Smithy. "Of these properties the most important is that which is known as the 'Coanda effect' or 'wall attachment effect'."

"Coanda effect?"

"Coanda effect," repeated Smithy. "This is named after Henri Coanda, who did a lot of work on the behaviour of fluid jets in the earlier part of this century, and whose findings were published in 1932. However, it wasn't until the early 1960's that the Coanda effect was put to use for logic devices and, since then, there has been a terrific amount of development in this field."

"How does the Coanda effect work?"

Smithy reached under the steering wheel and brought out a tattered road map.

"Here we are," he said, pulling a ball-pen from his jacket pocket, "I'll sketch out a basic example on the back of this. Let's start off with a simple nozzle, through which fluid under pressure is pumped. (Fig. 1 (*a*)). This fluid can be any liquid or gas, but let's just say for the moment that it's a gas other than air and that, after leaving the nozzle, the resultant jet is surrounded by air. Now, it doesn't take a great deal of imagination to visualise the fact that, on the outside boundary of the jet, molecules of air will get taken up with the gas and will be caused to flow in the same direction alongside it. So that what you really have after the nozzle is the basic stream of gas, along whose outer edges is also a current of air molecules travelling with the stream. The air molecules at the boundary of the jet will be much fewer in quantity than the gas molecules in the jet itself, but they'll still be there nevertheless. The presence of the jet of gas causes, therefore, a subsidiary current of air, like this."

Smithy sketched out this second set of circumstances. (Fig. 1 (*b*)).

"Right!" he announced briskly. "Let's next add a wall at the side of the jet which is very close to the edge of the hole in the nozzle. (Fig. 1 (*c*)). What happens now is that the jet will still try to carry molecules of air with it but the supply of air molecules will be restricted on the side where the wall is. The result is that a partial vacuum is formed between the jet and the wall, and the jet swings over towards it. The jet then becomes attached to the wall (Fig. 1 (*d*)) and flows along its surface instead of flowing outwards freely, as it did before the wall was put there. Note that a small bubble of air remains trapped in the corner between the edge of the nozzle surface and the start of the wall."

"I see," said Dick thoughtfully. "In other words, if you put a side wall close to the edge of a nozzle aperture, the jet leaving the nozzle will travel along the wall surface instead of going straight out."

"That's right," confirmed Smithy. "And that is the Coanda effect in a nutshell. Since the jet attaches itself to the wall, the Coanda effect is alternatively described as the wall attachment effect."

"How can you use this effect in logic devices?"

"Very easily," replied Smithy, taking up his pen again. "We'll start off with a fluidic bistable flip-flop, because that works direct from Coanda effect without any added complications. In a fluidic bistable flip-flop you have an input supply nozzle and two side walls leading away from it at a slight angle. (Fig. 2 (*a*)). These two side walls lead to two output openings, or 'ports' to use the correct term, in the manner I've shown. There are also two control ports which lead to small apertures on either side of the nozzle. This system of ports, apertures and channels is not open, of course. The whole is enclosed top and bottom, with the result that the device consists, actually, of a flat box with all the fluidic sections inside, and with small protruding pipes outside which constitute the supply port to the jet nozzle, the output ports and the control ports. (Fig. 2 (*b*)). The lengths of tubing which couple to other devices or to the activating pump are then fitted over these pipes. In some instances, incidentally, there are sockets in the box edges to take the coupling tubing rather than protruding pipes."

"How does the flip-flop work?"

"First of all," said Smithy in reply, "we start off by applying gas under pressure to the supply nozzle, whereupon a jet of gas appears in the body of the system. The two side walls are exactly symmetrical on either side of the nozzle and the jet will initially attach itself to either side wall in random fashion. This is just the same as the electronic flip-flop which, on being initially switched on, will similarly, in random fashion, assume one or other of its two states. Let's say that the jet attaches itself to the side wall on the right (Fig. 3 (*a*)) whereupon we will get an output of gas from the right hand output port. To switch the jet over to the left we inject gas under pressure at the right hand control port. (Fig. 3 (*b*)). This gas flows into the bubble at the

www.americanradiohistory.com

corner between the side wall and the nozzle and it raises the pressure in this bubble. The size of the bubble then increases until the jet is displaced away from the wall sufficiently far along for the Coanda effect to cease. The attachment to the right hand wall at once breaks down, the jet flips over to the left hand wall and is then held there by Coanda effect. Thus, by applying a control gas to the right hand control port we have flipped the jet over to the left, and we now get an output from the left hand output port. If we want to flip the jet back to the right again, we have to apply a control gas to the left hand control port, whereupon the reverse process takes place. A point to bear in mind is that, after the control gas has flipped the jet over, it can still continue to flow into the device, if desired. It then merely gets taken up in the main stream of gas and goes out via the same output port. Alternatively the control gas can be cut off after it has flipped the jet over."

"Gosh," said Dick, "that *is* a cunning bit of operation."

"Isn't it?" agreed Smithy. "Something I haven't yet referred to is the fact that the control pressure can be considerably lower than the pressure in the main stream of gas from the jet. The situation here is complicated by the fact that the control pressure required to flip the jet over depends upon the load presented to the output ports by devices to which these are coupled but, rough check, the control pressure can be a fifth, or less, of the output port pressure from the jet that has been switched. This means," concluded Smithy, "that you can get quite a reasonable fan-out figure with a fluidic device of this nature."

FAN-OUT AND FAN-IN

"Fan-out?" queried Dick. "What on earth is *fan-out*?"

"Fan-out," explained Smithy, "is a term which defines the quantity of further logic devices which a single device can drive. If the fluidic bistable we are considering can be switched by a control gas whose pressure is a fifth of the output pressure it follows, at first sight, that its output could control five further bistables, whereupon it would be described as having a fan-out of 5. However, there are losses in the coupling tubing and other factors to be considered, and such a device would probably have an actual fan-out of 3 in practice. Which is, of course, by no means to be sneezed at. Devices with a higher ratio between output pressure and control pressure will, of course, have a higher fan-out figure."

"Are there," asked Dick, "any other fluidic effects as well as the Coanda effect?"

"Quite a few," replied Smithy. "But, seeing that we're dealing at the time being with elementary principles, I'll only refer to a second, this being the one which is next in importance to the Coanda effect. And I can demonstrate this by means of a monostable fluidic device. This is a device which always gives an output at one output port until a control gas is applied. It then flips over to the other output port, but returns to the first output port as soon as the control gas input is cut off."

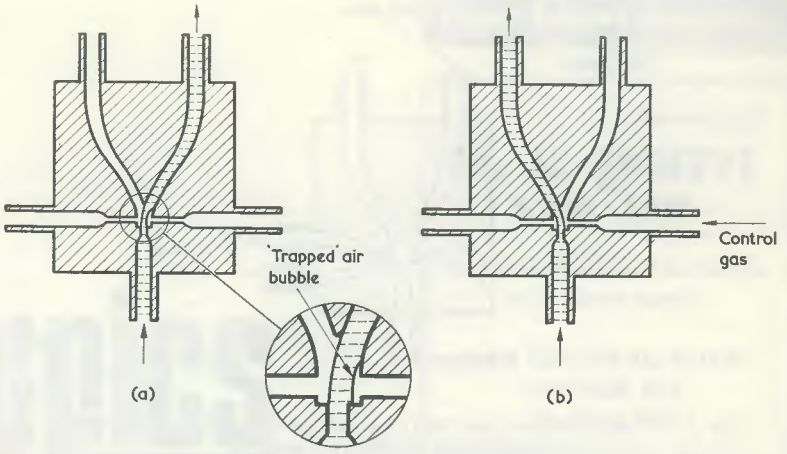

Fig. 3 (a). When a supply gas is applied to the bistable flip-flop, the jet may attach itself either to the left or to the right hand wall. Here, it is attached to the right hand wall
(b). By applying a control gas to the right hand control port, the jet is caused to "flip" over to the left hand output

Smithy once more busied himself with his pen. (Fig. 4 (*a*)).

"Here we are," he said, after a moment. "Now take a shufti at this! What I've got here is rather the same as we had with the bistable we've just been considering, except that there is only one control port, this being on the right. On the left there is a vent, or opening to the air, coupling to an apperture at the start of the left hand wall. This vent prevents the Coanda effect occurring on the left hand wall so that, as soon as the input gas flows through the nozzle, it immediately attaches itself to the right hand wall only. When a control gas is caused to flow through the right hand control port the Coanda effect at the right is broken but this fact, on its own, does not then cause the jet to flip over so that it all flows out to the left hand port. Instead, the input control pressure *deflects* the jet over to the left, and the jet stays there so long as the control pressure is in existence. (Fig. 4 (*b*)). This action is not the same as with the bistable flip-flop because no Coanda effect can take place at the left hand wall. The

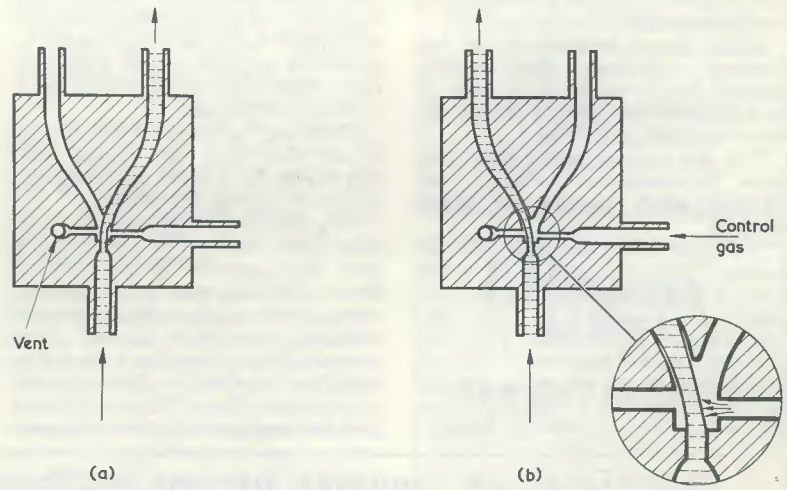

Fig. 4 (a). A fluidic monostable. The vent prevents Coanda effect occurring at the left hand wall
(b). When a control gas is fed in at the control port, the jet switches to the left due to jet deflection

www.americanradiohistory.com

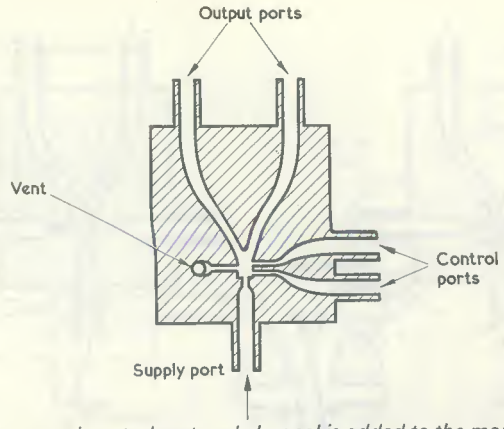

Fig. 5. If a second control port and channel is added to the monostable, it becomes an OR/NOR gate

action is due instead to jet deflection or, to use a more precise term, 'momentum interaction'. The jet flips back to the right hand wall as soon as the control gas input ceases. Despite the different method of operation you still get pressure gains, between control pressure and output pressure, of at least 5."

"Well, that's a neat trick," remarked Dick, looking at Smithy's sketch a little critically. "But I can't, with all due respect, see how this monostable device you've just shown me is going to be of much use in logic work. It seems to be of more use as an amplifier than as a gate."

At that moment a sparrow settled on the bonnet of Smithy's car, and proceeded to chirrup loudly in the bright sunshine. But the enjoyment displayed by this dimunitive envoy from Mother Nature was as nothing compared with the delight that irradiated the Serviceman's features at Dick's words.

"There are times, Dick, when you show signs of almost transcendental wisdom and sagacity."

Smithy gazed benevolently at his assistant, whereupon that worthy breathed heavily on the finger-nails of his right hand and polished them airily on the lapel of his jacket.

"I'm not just a pretty face, you know," he commented modestly. "I've got brains which I haven't even started using yet."

"I'm quite certain you have," beamed Smithy. "And that remark of yours shows that you really *are* on the ball today. As a matter of fact, the monostable fludic device I've just discussed *can* be used as a form of amplifier but it isn't otherwise of much use for normal logic applications. The main reason I described it is because it readily demonstrates the jet deflection effect. Now, after having said all that, I am about to make a very crafty change to that device, this consisting of adding a *second* control port and channel on the right hand side. (Fig. 5). As you'll see in a jiffy, the introduction of this second control channel creates a very different state of affairs. The second control channel opens at an aperture alongside that from the first control port, and is similarly capable of switching the jet over to the left hand output port. In consequence, you now have the situation where you get an output at the left hand port when there is an input at either one of the two control ports or at both of them."

"Why, that rings a bell," remarked Dick suddenly. "Gosh, that's the same as you get with an OR gate!"

"Exactly," grinned Smithy. "The device now becomes an OR gate because there's an output at the left hand output port if input 1 *or* input 2 *or* both together are present. At the same time, the output at the right hand port corresponds to the inverse condition so that, if you take your output from the right hand port, you have a NOR gate."

"Blow me," said Dick. "I'm beginning to see, now, how this fluidics logic business begins to build up. Could you have more than two control ports?"

"Oh, definitely," replied Smithy. "And quite large numbers of control ports have been provided in experimental devices. The main snag is that the more control ports you have, the greater the number of apertures at the start of the corresponding side wall and the bigger the risk of the Coanda effect not being able to take place. This is a physical limitation, and is imposed by the physical dimensions to which the fluidic device can be made. Monostable fluidic devices are normally manufactured with 2 or 3 control ports, which are all that is required for most practical purposes, and an input at any one of these is capable of switching over the jet. Such devices will be stated to have a fan-in of 2 or 3 according to the number of control ports available."

"Seeing," said Dick philosophically, "that we've just had 'fan-out' I suppose we *had* to have 'fan-in' as well."

"The term is used in the same sense as it is with electronic logic devices," replied Smithy. "Returning to the bistable we looked at earlier, this can also be made, if desired, with 2 or 3 control ports on either side, an input at any one of which is capable of causing the flip-flop to change over."

OFF TO TEA

"I must say," remarked Dick, "that fluidics is a far more interesting thing than I'd expected it to be."

"There's certainly a lot in it," replied Smithy. "And I've by no means given you all the basic gen yet."

He glanced at his watch.

"Time's getting on," he remarked, "and all this talk about fluidics is making me thirsty! It would be hopeless for me to attempt to cover everything else today so, instead, I'll promise you that I'll complete the fluidics story at our next little session together. How about that?"

"That would be fine," said Dick. "You've given me plenty to think about today in any case. Still, I'm certainly looking forward to any further gen you've got."

"Good show," said Smithy. "In that case, let's get mobile and see what we can dig up in the way of tea."

Smithy switched on and started the engine. Dick watched with a combination of fascination and apprehension, and noted that the aggressive gleam in the Serviceman's eye, so evident before they had stopped at the clearing, had now reappeared.

"Right," snapped Smithy, as he vindictively thrust the gear lever into reverse. "Off we go!"

As the car swung viciously backwards, Dick steeled himself for a further session with Smithy whilst that gentleman wore his motorist's cap. But Smithy, following in the steps of his archetype Toad—of Toad Hall fame—had .o thoughts for his passenger. Like so many other mild-mannered men, once behind the wheel he had become Smithy Against The Rest . . .

HOLIDAY VISITORS WELCOMED

Britsih radio enthusiasts—constructors, transmitting amateurs and s.w.l.'s—visiting Palma de Mallorca are invited to visit retired old-timer V. S. Alexandersen. In his letter, Mr. Alexandersen informs us that he held the call ES3CX from 1927 until 1936. His address is Camino Son Toelles 37, St. Augustin, Palma de Mallorca. Telephone 235547.

www.americanradiohistory.com

Radio Topics

By Recorder

THE FACT THAT COLOUR TV IS NOW with us is fully demonstrated by two booklets I have to hand. Both come from the Mazda stable, and both have a connection with colour.

SHADOW-MASK TUBES

The first of these booklets is entitled "Electrons In Shadow-Mask Colour Tubes", and it specifically levelled at service technicians already familiar with the principles of black and white television. It is written by Bernard Eastwood, B.Sc., M.I.E.E., who is Manager and Chief Engineer of the Thorn-AEI Applications Laboratory. Coming, as it does, from one of Britain's major tube manufacturers it can be relied upon as a fully authoritative work on the subject. Some of the diagrams and photographs in its 40 pages are in full colour, and all are clear and easy to follow.

The idea behind the booklet is to give, in simple logical stages, the basic principles of operation of current shadow-mask tubes, introduce their neck components and outline the methods used in tube manufacture. Also discussed are degaussing, purity, static and dynamic convergence, and grey scale tracking. Included is Test Card "F", in full colour.

The second Mazda publication is the 1968 Mazda Valve and Picture Tube Data Booklet. Readers associated with retailers will have probably already obtained a copy of this but, since others may have not, it is still worth-while for me to pass on details here. For the first time, this booklet now contains details of colour TV tubes and valves. Also provided is a clear explanation of Sparkguard S and R protection methods, whilst the main body of the booklet gives condensed details of all the current range of Mazda valves and tubes together with obsolescent and obsolete types. This booklet is intended to lay open on the bench at any of its 168 pages, and it is certainly a very useful aid both to the service engineer and the home-constructor. To give an idea of its anticipated popularity, more than 5 tons of paper were used in its printing!

Both these publications are available by post from Mazda Publicity Department, Thorn-AEI Valves and Tubes, Ltd., 7 Soho Square, London, W.1. Colleges, schools and students, etc., may obtain "Electronics In Shadow-Mask Colour Tubes" for 3s. 6d. plus 6d. postage per book (cash with order), whilst the 1968 Mazda Valve and Picture Tube Data Booklet is available free of charge.

CONVERSION FOR STEREO

One of the most popular f.m. receiver designs we have published appeared in our February and April 1967 issues, this being the "High Sensitivity Transistor V.H.F. Portable" by T. Snowball. The receiver is a double superhet, with a second i.f. at 200kc/s feeding a pulse discriminator. (Incidentally, in the circuit diagram on page 424 of the February issue the negative supply line for TR_1 to TR_5 bears the legend "—8V". As pointed out in the following June issue, this supply line is at chassis potential.).

A number of readers have enquired

Your Local Supplier

LONDON

Established 1910

H. L. SMITH & CO. LTD.

Comprehensive stocks of components by all leading makers.

287-9 EDGWARE ROAD
LONDON W.2
Tel: 01-723 5891

TELERADIO ELECTRONICS

For Radio Control Devices, Miniature components, Special Transistors, Circuits and data on boat and aircraft control.

QUOTATIONS GLADLY FOR PARTS USED IN MAGAZINE ARTICLES

(S.A.E. Enquiries REF. D/P)

325/7 FORE STREET,
EDMONTON (3719)
LONDON, N.9.

THE MODERN BOOK CO.

Largest selection of English and American radio and technical books in the country.

19-21 PRAED STREET,
LONDON, W.2
Tel: PADdington 4185/2926

ELECTRONICS GALORE!
in the NEW
dca CATALOGUE
Send 1/6 now for your copy to: DEPT. R/C
dca ELECTRONICS LIMITED
28 UXBRIDGE ROAD, EALING, W.5

www.americanradiohistory.com

Your Local Supplier

LONDON

ST. HELEN'S RADIO

Hi-Fi Equipment
Tape Recorders
Radio Receivers
Television

SPECIALISTS IN RADIO & ELECTRONIC TEXTBOOKS

ST. HELEN'S GARDENS
LONDON W.10
Tel: 01-969 3657

ESSEX

ELECTRONIC COMPONENTS

Valves, transistors, capacitors, transformers, amplifiers, tuners, etc., etc.

765 HIGH ROAD,
SEVEN KINGS
(opp. Seven Kings Hotel)
ILFORD, ESSEX
Telephone: GOOdmayes 1826

MARKET CENTRE
For Semiconductors

Prompt, efficient mail order service for Mullard, Newmarket, Texas, Sinclair, S.T.C., Fairchild Semiconductors. We also offer a comprehensive selection of miniature components for transistor circuitry. Catalogue 1s.

L.S.T COMPONENTS
23 New Rd., Brentwood, Essex

HAMPSHIRE

BOURNEMOUTH
LARGEST HI-FI AND RADIO COMPONENT STORE IN THE SOUTH

FORRESTERS NATIONAL RADIO SUPPLIES LTD.
70–72 Holdenhurst Road
Bournemouth
Telephone **25232**

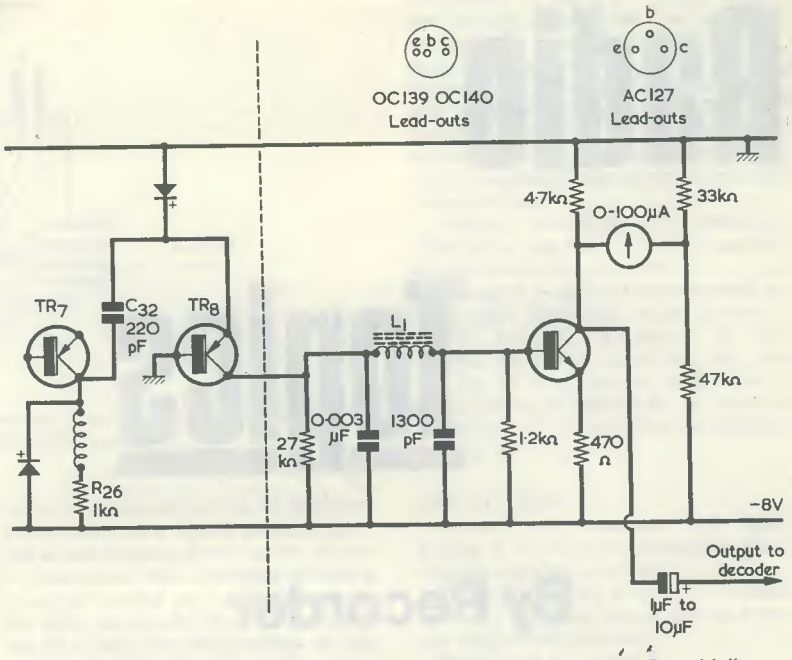

Modifications required to "High Sensitivity Transistor V.H.F. Portable" for stereo reception

about using this receiver to drive a decoder for stereo reception, and Mr. Snowball has sent us details of the modifications involved.

The main requirement is to accomodate the increase in modulation frequencies up to 53kc/s in order to cope with the stereo information. In consequence, it becomes necessary to remove the normal de-emphasis circuit, and to arrange the audio circuits for detection up to 53kc/s followed by a sharp cut-off to reduce any noise which could beat with the stereo subcarrier and cause trouble in the following audio amplifier.

Referring to the complete circuit diagram (page 424 of the February 1967 issue) all components following TR_8 collector become redundant, and R_{26} and C_{32} should be changed to enable the higher frequencies to be handled correctly. R_{26} changes to 1kΩ and C_{32} to 220pF.

An extra circuit consisting of a low-pass filter with a cut-off frequency of 53kc/s, followed by a buffer amplifier to drive the decoder is required, and this is shown in the accompanying diagram. All components to the right of the dashed line are additional to the original design. Resistor and capacitor values are given in the diagram and the additional transistor may be OC139, OC140 or AC127. The output coupling capacitor can have a value ranging from 1 to 10μF. The tuning meter is a centre-zero type and this (with the 33kΩ and 47kΩ resistors) is optional. Tune for a centre indication in the meter.

The additional coil L_1 has an inductance of 4.2mH, and consists of 300 turns of 42 s.w.g. enamelled wire on a Neosid pot core type 10D/WR. This pot core is available from Home Radio or Henry's Radio.

The discriminator characteristic is linear from 150 to 550 kc/s, and the centre frequency of the second i.f. should now be changed to 350 kc/s. This means resetting the second oscillator to 10.35 Mc/s, using the process described in the original article.

OHM'S LAW WINS AGAIN

One of the laws that won't be repealed for quite a little while yet is that due to the good Simon Ohm, and I find it of great use if I want to check currents in receiver circuits during the occasional bits of servicing that I get talked into doing every now and again. Incidentally, it is only rarely that I ever *physically* measure a current in a receiver (apart, of course, from overall battery current with a transistor set) because this entails the bother of disconnecting a circuit so that a testmeter can be inserted. There is almost certain to be fixed resistance of some sort in the circuit whose current I want to check, and it's a darned sight quicker to measure the voltage drop across this resistance and work out the current from Ohm's Law than it is to mess around unsoldering connections so that a meter can be put in series. You don't need paper and pencil to do the Ohm's Law calculations either; just remember that 1 amp through 1Ω gives 1 volt, or that 1mA through 1kΩ similarly gives 1 volt. If, for instance, you find

www.americanradiohistory.com

a voltage of 27 across a 27kΩ resistor, then the current flowing through that resistor is 1mA. If the voltage is 54, the current will be 2mA. The voltmeter used for checks of this nature requires a reasonably high resistance if it isn't to introduce too many errors due to the current it consumes, and 10,000Ω per volt or more is essential here.

If isn't always necessary to have a physical resistor in a circuit in order to find the current which flows in it. Many inductive components exhibit a winding resistance which is sufficiently high to provide the required voltage reading quite readily. A typical example occurs in a valve output stage. Small speaker transformers have primary resistances of the order of several hundred ohms or more. If, therefore, you want to find the anode current of an output valve, first measure the output transformer primary resistance with the set switched off, then switch the set on and measure the voltage dropped across that primary.

These thoughts are prompted by a rush repair job I carried out during the last week. A relative's valve a.m./f.m. receiver had developed excessive hum on all wavebands, this appearing after the set had been switched on for about quarter of an hour or so. The set was left with me and I was asked to fix it as soon as possible because of a special programme the next day. Clearing the hum snag required a valve change only (of which more anon) but, just as I was about to put the back on the set again, a little firework display started up in a dim corner of the printed board and the speaker suddenly became silent.

At moments like this the philosophic approach is to assume that it's a good thing the breakdown occurs whilst the set is on the bench rather than immediately after it has been returned to the owner. Nevertheless, it *was* exasperating to have to pull out the chassis and do some further fault-finding. Fortunately, I had a service sheet for the set in question and I soon found that the component which had gone was a 100Ω 3 watt limiter resistor between the live mains input and the rectifier anode. Exasperation returned when I found no suitable replacement amongst my usual working spares and so, after checking that there were no obvious h.t. short-circuits to chassis, I temporarily tacked two ½ watt 47Ω resistors, in series, across the printed circuit board points to which the faulty 100Ω resistor had previously connected. The set functioned perfectly after switching on again so this did at least indicate that the 100Ω resistor had merely gone o/c due to old age. I then switched off before the two temporary resistors became too overheated and conducted a further search through some old junk boxes, but all I could unearth was an ancient and venerable 150Ω resistor of about 5 watts rating. 50% too high in resistance value!

It suddenly occurred to me: did it matter? Receivers of this nature draw an h.t. current of a little less than 100mA whereupon the extra 50Ω would only mean an h.t. voltage drop, working from Ohm's Law, of 5 volts, plus a further drop due to reduced charging current peaks in the reservoir electrolytic. At any event I next switched on and measured the h.t. voltage at the rectifier cathode with the two temporary 47Ω resistors in series, to find that this was 195 volts. I switched off, removed the 47Ω resistors, and put the 150Ω resistor in their place. Ohm's Law was vindicated once more as the voltmeter needle obligingly rose to 190 volts, and the set worked perfectly on all wavebands.

My relative now has the set back with the 150Ω resistor fitted, and I will later change this for the correct 100Ω value after my next component-shopping spree. For an urgent repair the replacement resistor was quite satisfactory, even if it *was* 50% too high in value. It would, incidentally, dissipate more heat than a resistor of the correct value, but it fortunately had a wattage rating capable of standing up to this. I must hasten to add that the repair would have been very unsatisfactory if I had used a replacement resistor *lower* than 100Ω. The set manufacturers must have had a very good reason for using a limiter resistor of this value, and it would have been bad practice to reduce it.

UABC80 TROUBLE

The valve which caused the original hum trouble? This was a UABC80, which is often encountered in valve a.m./f.m. radios. The UABC80 is a triple-diode-triode with an 0.1 amp heater, and the usual practice is to use two of its diodes in the f.m. discriminator circuit, the third diode as an a.m. detector, and the triode as a.f. voltage amplifier feeding the output pentode. Normally, the triode is employed with grid current bias, the cathode going straight to chassis an arrangement which eases diode circuit design) whilst the grid leak has a value of 10MΩ.

This is a perfectly reasonable arrangement but, whenever I encounter a valve a.m./f.m. set with hum trouble I check to see whether it has a UABC80 in it. If it has this is the first valve I change, and the replacement often brings about a cure even if the hum was evident on a.m. or on f.m. only. In this respect I always use a replacement valve branded with the trade-mark of a reliable manufacturer, such as Mullard. If the replacement valve is one of the unbranded UABC-80's that are knocking around these days, the hum trouble may well reappear once more after it has been in service for a few months only.

Your Local Supplier

SURREY

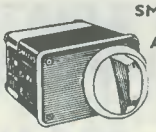

SMITHS PRECISION
6 MINUTE DELAY
ACTION SWITCH
Clockwork actuated
10/6 EACH
Post 2/6
(3 or more post free)

Separate switching up to 6 mins. Each action for loading up to 15 amps. 250 volts. For photographic timer, sequence switching operations, etc., etc. Brand new units at a fraction of their value. Connection sheet supplied.

Radio Component Specialists
337, WHITEHORSE ROAD,
WEST CROYDON, SURREY
Phone 01-684-1665 FULL LIST 1/-

SUSSEX

E. JEFFERIES

For your new television set, tape recorder, transistor radio, and hi-fi equipment.

PHILIPS, ULTRA, INVICTA, DANSETTE, MASTERADIO, PERDIO, MARCONI, PHILCO, FIDELITY.

6A Albert Parade,
Victoria Drive,
EASTBOURNE SUSSEX

WORCESTERSHIRE

Dept. C1, 176 HAGLEY ROAD
HALESOWEN
021-550 3210 WORCS.
Hi-Fi Equipment
Transistors and
Radio Components
Public Address Amplifiers
MARLISON Electronics

EIRE

PEATS for PARTS
ELECTRONIC COMPONENTS
RADIO & TELEVISION

For the convenience of IRISH enthusiasts we supply:
The Radio Constructor,
Data Books and
Panel-Signs Transfers
Also a postal service

Wm. B. PEAT & Co. Ltd.
28 PARNELL STREET
DUBLIN 1

www.americanradiohistory.com

TV
FAULT FINDING MANUAL for 405/625 LINES

8/6
POSTAGE 8d.

REVISED & ENLARGED
EDITED BY J. R. DAVIES

124 pages

Over 100 illustrations, including 60 photographs of a television screen after the appropriate faults have been deliberately introduced.

Comprehensive Fault Finding Guide cross-referenced to methods of fault rectification described at greater length in the text.

UNDERSTANDING TELEVISION

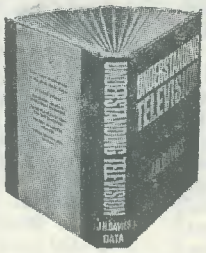

by
J. R. DAVIES

Over 500 pages
300 diagrams

37/6 POSTAGE 3/–

UNDERSTANDING TELEVISION deals with:

- Principles of 405 line reception
- Principles of 625 line reception
- Nature of the television signal
- Receiver tuner units
- A.F. and video amplifiers
- Deflector coil assemblies
- Automatic gain and contrast control
- Receiver aerials
- The cathode ray tube
- Receiver i.f. amplifiers
- Vertical and horizontal timebases
- Synchronising
- Power supply circuits
- Colour television
- **COLOUR TELEVISION — 80 page section deals comprehensively with this subject**

The reader is required to have only a basic knowledge of elementary radio principles. The treatment is non-mathematical throughout, and there is no necessity for any previous experience in television whatsoever. At the same time, UNDERSTANDING TELEVISION is of equal value to the established engineer because of the very extensive range it covers and the factual information it provides.

To Data Publications Ltd., 57 Maida Vale, London, W9

Please supply the 4th revised edition of TV FAULT FINDING, Data Book No. 5 .....

Please supply UNDERSTANDING TELEVISION, Data Book No. 17.....

I enclose cheque/crossed postal order for.....(Tick which book is required)

NAME .....

ADDRESS .....

.....

BLOCK LETTERS PLEASE

www.americanradiohistory.com

BY ORDER OF THE RECEIVER & MANAGER
re: JENNINGS MUSICAL INSTRUMENTS Ltd.

Of interest to all electronic Guitar & Organ Manufacturers, Musicians & Electronic Engineers.

SALE BY AUCTION

Of all remaining stock of an Electronic Guitar & Organ Manufacturing Business.

including

Electric Guitars and Organs, Large Quantities of Electric Components, Guitar Cases, Amplifiers and Spare Parts, Radio Transmitters. Aircraft transmitters/Receivers and many items of interest to Electronic Engineers.

also

Office Furniture. Desks. Cupboards. Steel office equipment. Factory Shelving. Steel Racks. Steel Bins, etc.

To be offered for sale by Auction in lots on the premises at

NORDENFELDT ROAD (off West Street), ERITH, KENT.

on THURSDAY 5th SEPTEMBER, 1968 at 11 am

(on view Wednesday 4th September 10 am to 4 pm)

Catalogue price 5/– from Joint Auctioneers

CHAMBERLAIN & WILLOWS
23 Moorgate, London, E.C.2. 01-638-8001

JOHN D. WOOD & CO.,
23 Berkeley Square, W.1. 01-629-9050

NEW COMPONENT PACKS

AX 9 RECEIVER PACK. This contains a 4″ x 1½″ tinned and drilled printed circuit plus all components for a sensitive 'straight' (t.r.f.) receiver. High gain silicon planar transistors, advanced but reliable circuitry, and battery economy (9V, 2mA). The basic receiver is for medium waves and loud earphone reception, but it is very easily adapted to other wavebands, and speaker reception.

* 4 planar transistors
* 4″ ferrite aerial
* J.B. 'Dilemin' tuning cap.
* Top quality components

Price 50/–, with full instructions.

AX 2 300 mW miniature 9V amplifier pack (for 3–80 ohm speakers) 13/–.

AX 3 1W miniature 9V amplifier pack (for 8 ohm speaker) 25/–.

TRANSISTORS, F.E.Ts., I.Cs.

Discount prices (in brackets) for 5 or more of same type.

AF239 u.h.f. amp. 10/– (8/6); **2N2926** (hfe=235–470) 3/– (2/6); **2N4058**, 5/6 (4/7); **BC107** 3/11 (3/1); **BC109** 3/6 (3/–). Power transistors: **AD161/162** comp. pair 15/6, **B–5000** npn 25W, hFE=100 12/6; **BD121** (95 MHz, 45W) 23/–; **2N3055**, 20/–; **TI3028**, 20/–. High-slope RCA mosfet **40468** (7.5mA/V) 10/3. Integrated ½W Amplifier **CA3020** 33/– with application notes; **CA3011** wide band FM amplifier-limiter 25/– with data. Other i.cs, etc. in stock.

Mail order only. Cash with order. U.K. post free on orders over 10/– (under 10/– add 6d.). Discounts: 10% over £5; 15% over £10.

AMATRONIX LTD.

(Dept. RC)

396 SELSDON ROAD, CROYDON, SURREY, CR2 ODE.

UNBEATABLE VALUE FOR YOU AS A READER OF THE RADIO CONSTRUCTOR

THE *NEW* TOLTEC HAIR DRYER

52/6
Add 4/6 for postage

SPECIFICATION

Moulded in beautiful symmetrical pastel blue impact resisting thermoplastic casing.
Quiet in operation.
Hot or cold air.
No radio or T.V. Interference—meets British standard specification.
Fitted with safety cut-out.
12 months & money refund guarantee.

230-250 volts A.C. only.

Value 80/9 in the shops

Send the coupon below with the sum of only **57/–** (this includes 4/6d to cover postage, packing and insurance, unless you are collecting personally).

Please send me one Toltec Hair Dryer at the special privilege price as advertised in *The Radio Constructor*

I enclose cheque/postal order value.....

Name .....

Address .....

.....

(Block capitals please)

To: **Toltec Electronic & Trading Co. Ltd.**
Hatton House, Hurst Green, Etchingham, Sussex

www.americanradiohistory.com

Nearly 1,700 Circuits and Diagrams plus full repair data for

800 POPULAR MODELS

1968 RIGHT BACK TO 1965

RADIO & TV SERVICING

Big time-saving repair library to step up your earnings

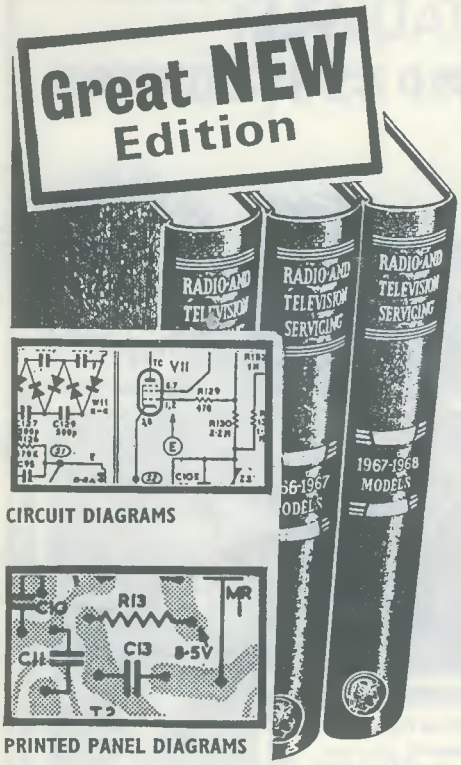

CIRCUIT DIAGRAMS

PRINTED PANEL DIAGRAMS

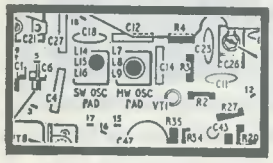

COMPONENT LAYOUT DIAGRAMS

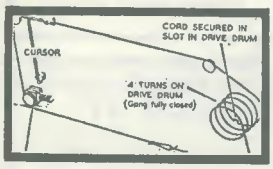

DRIVE-CORD DIAGRAMS

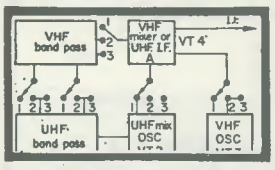

BLOCK DIAGRAMS

Great NEW Edition of RADIO & TV SERVICING, to save your time, to boost your earning-power. Packed with CIRCUITS, REPAIR DATA and vital information, it covers all the popular 1965–1968 TVs, Radios, 'Grams, Record Players and Tape Recorders—including latest data on COLOUR TV. Thousands of sets of previous editions sold. Now you can examine this big NEW edition free for a week. 3 handsome volumes—over 1,500 pages written by a team of research engineers—there's no other publication like it. Speeds up repair work for year after year. Hurry—send no money—simply post the coupon below . . . There can be no reprint once stocks are sold and there's absolutely no obligation to buy under this free trial offer.

FULL DATA AND CIRCUITS FOR REPAIR OF

- **TELEVISIONS including**

COLOUR TV

- **RADIOS, RADIOGRAMS**
- **CAR RADIOS**
- **RECORD PLAYERS**
- **TAPE RECORDERS**

SERVICING DATA FOR ALL THESE MAKES

Aiwa, Alba, Baird (including colour TV), Beogram, Beolit, Bush, Carousel, Cossor, Dansette, Decca, Defiant, Dynaport, Dynatron, Eddystone, Ekco, Elizabethan, Ever Ready, Ferguson, Ferranti, Fidelity, G.E.C. (including colour TV), Grundig, H.M.V., Kolster-Brandes, Hitachi, Invicta, McMichael, Marconiphone, Masteradio, Motorola, Murphy, National, Newmatic, Pam, Perdio, Peto-Scott, Philips (including colour TV), Portadyne, Pye, Radiomobile, R.G.D., Regentone, Roberts' Radio, Sanyo, Sharp, Smith's Radiomobile, Sobell (including colour TV), S.T.C., Sony, Standard, Stella, Stereosound, Teletron, Thorn, Trans Arena, Ultra, Van Der Molen, World Radio.

PLUS LATEST DEVELOPMENTS IN RADIO AND TELEVISION

Including—Integrated Tuners, Stereo Multiplex Broadcasting—The Zenith-G.E. System: Receiver, Decoder and adjustments, Aerial, etc. Colour TV Receivers, Colour TV Test Card F, Servicing Transistor Equipment, Chemical Aids to Servicing, Batteries and Rechargeable Cells, Sound-on-Sync., Double Line Sync., Silicon Transistors, etc.

IT'S SENT TO YOU CARRIAGE-PAID ON 7 DAYS

FREE TRIAL

Absolutely no obligation to buy

OVER 1,500 PAGES, PACKED WITH CIRCUITS, COMPONENT LAYOUT DIAGRAMS, PRINTED PANEL DIAGRAMS, TABLES AND WAVEFORM GRAPHS

Handsomely bound in rich maroon and gold.

Buckingham Press Ltd., 18-19 Warren Street, London, W.1.
Please send Radio and TV Servicing—3 volumes, without obligation to buy if you accept my application. I will return the books in 8 days or post:
Tick (✓) here ☐ Full cash price of £12, or ☐ 15/- dep. and 16 monthly payments of 15/-.
If you are under 21 your father must fill up coupon.

Full Name .....
(Block letters)
Address .....
.....
County .....
Occupation .....
Signature ..... Mr. / Mrs. / Miss

Please tick (✓) here
The address on left is my/your property ☐
Rented unfurnished ☐
Furnished accom ☐
Temporary address ☐
If none of the above please answer here
.....

Credit price £12 15s. For Eire & N.I. send £12 with coupon. Elsewhere overseas add 10/- p. & p.

RV3/3754

www.americanradiohistory.com

SMALL ADVERTISEMENTS

Rate: 9d. per word. Minimum charge 12/–.
Box No. 2/– extra.

Advertisements must be prepaid and all copy must be received by the 4th of the month for insertion in the following month's issue. The Publishers cannot be held liable in any way for printing errors or omissions, nor can they accept responsibility for the *bona fides* of advertisers. (Replies to Box numbers should be addressed to: Box No.—, *The Radio Constructor*, 57 Maida Vale, London, W.9.)

SERVICE SHEETS. Radio, Television, Tape Recorders 1925–1968, by return post, from 1s. with free fault-finding guide. Catalogue 6,000 models 2s. 6d. S.A.E. enquiries. —Hamilton Radio, 54c London Road, Bexhill, Sussex.

FOR SALE. Oscilloscopes—Galvanometers—Evershed & Vignolles Meggers—Relays—Uniselector Switches—Solenoids. Also other items and components. Free list. Stamp please.—R. & E. Mart, Box 9 G.P.O., Tunbridge Wells, Kent.

ILLUSTRATED CATALOGUE No. 17. Manufacturers Surplus and New Electronic Components including Semiconductors. 3/– Post Free. Arthur Sallis Ltd., 28 Gardner Street, Brighton.

CAR ELECTRONIC IGNITION SYSTEMS. If you want to cut petrol consumption (up to 6 m.p.g. extra) and cut plug and point wear, these units do it. If you want more, you also get smoother and stronger pulling at low speeds and better sparks at high speeds. Unbelievable winter starting. Soon pays for itself. Guaranteed new and tested. Offered at only £12 (nearly half price). Only 3 connections. State earth polarity. 12V only. Orders to: R. Turner, 70 Jarrett Avenue, Wainscott, Rochester, Kent.

5 TON FACTORY CLEARANCE. Radio, T.V., elec. components in 27s. 6d. mixed parcels. Post free. Example: resistors, condensers, pots, speakers, coax, coils, fibre washers, valves, over a dozen different types, tuning knobs, grommets, sleeving, IFS, Paxalin, wire, rectifiers. Lots of other items. Pot Luck. Postal orders to: P. L. Newton, 16 Shallcross Crescent, Hatfield, Herts.

FOR SALE. Everything for the Electronics & Radio Constructor. Transistors, P/C boards, Chemicals, Relays, etc. 6d. for Lists to—HARROGATE RADIO CO., 16 REGENT PARADE, HARROGATE, Yorks.

BRIGHTEN UP YOUR ADVERTISING! Break the ice with a cartoon, "tailor made" for your product. Reasonable charges.—Box No. F294.

15% DISCOUNT on all 1968 shavers. S.A.E. for immediate quotation. Kash Electronics, 65 Canute Road, Hastings, Sussex.

LEARNER DRIVERS. Amazing test cards available, plus unpublished penalty faults. Why wait, pass first time. Free details:—Marchant, Cotswold Publishers (Dept. R.C.), 27 Long Street, Tetbury, Glos.

BOOKS FOR SALE. *Alfred Nobel* E. Bergengren £1, *Radioisotope Laboratory Techniques* R. A. Faires, 10s. *Atomic Medicine* Behrens, £1. *Medical Radiation Biology* Ellinger, 30s. *Physics in Medical Radiology* Russ, Clark & Pelc, 7s. 6d. *Disease & its Conquest* Hollis, 7s. 6d. *Earth's Envelope* T. Lobsack, 15s. *The Atomic Submarine* C. Blair, 7s. 6d. *Astro- and exploration* D. R. Bates, £1. *Once round the Sun* Story of the I.G.Y., Fraser, 10s. *Earth Satellite* P. Moore, 7s. 6d. *Frontier to Space* E. Burgess, 5s.—Box No. F316.

continued on page 66

BENTLEY ACOUSTIC CORPORATION LTD.

38 Chalcot Road, Chalk Farm, LONDON, N.W.1.
PRImrose 9090

The Old Police Station Gloucester Road LITTLEHAMPTON, Sussex

Please forward all mail orders to Littlehampton PHONE 6743

5Z4G	7/6	ECC84	6/–	PC88	6/–	UBC81	6/6	AF117	3/4	GET896	4/6
6AT6	4/–	ECC85	5/–	PC95	8/3	UBF80	5/6	AF119	3/–	GET897	4/6
6/30L2	12/6	ECC88	7/–	PC97	7/9	UBF89	6/3	AF125	3/6	OA81	1/9
6F23	11/6	ECC189	9/6	PC900	9/–	UC92	5/6	AF127	3/6	OA95	1/9
6L6GT	7/9	ECF80	7/–	PCC84	6/–	UCC84	8/–	AF139	11/–	OA182	2/–
10F1	15/–	ECF82	6/9	PCC85	6/9	UCC85	6/6	AF180	9/6	OA200	1/–
10P13	15/6	ECF86	9/–	PCC88	11/–	UCF80	8/3	AFZ12	5/–	OC22	5/–
20D1	13/–	ECH42	9/6	PCC89	10/3	UCH21	9/–	ASY29	4/6	OC23	7/–
20L1	13/–	ECH81	5/6	PCC189	9/3	UCH42	10/–	BA115	2/8	OC24	14/6
20P4	16/6	ECH83	7/–	PCF80	7/–	UCH81	6/–	BA129	2/6	OC25	5/–
30C15	13/6	ECH84	6/6	PCF82	6/3	UCL82	7/–	BA130	2/–	OC26	5/–
30C17	13/–	ECL80	6/–	PCF84	8/–	UCL83	9/6	BC107	4/–	OC28	5/–
30C18	8/9	ECL82	6/6	PCF86	8/–	UF41	9/3	BC108	3/9	OC30	7/–
30F5	11/6	ECL83	9/–	PCF801	7/–	UF42	9/–	BC109	4/6	OC35	10/–
30FL1	15/–	ECL86	7/9	PCF802	9/6	UF80	6/9	BCY10	5/–	OC36	7/6
30FL12	15/–	EF22	12/6	PCL82	6/6	UF85	7/3	BCY12	5/–	OC38	11/6
30FL14	12/6	EF37A	7/–	PCL83	8/9	UF86	9/–	BCY33	5/–	OC41	10/–
30L15	13/9	EF41	9/–	PCL84	7/3	UF89	5/9	BCY34	5/–	OC44	2/–
30L17	13/–	EF80	4/6	PCL85	8/3	UL41	9/–	BCY38	5/–	OC45	1/9
30P4	12/–	EF85	4/9	PCL86	8/3	UL84	6/–	BCY39	5/–	OC46	3/–
30P4MR	17/6	EF86	6/3	PFL200	12/6	UM80	5/–	BFY50	5/–	OC70	2/3
30P12	13/–	EF89	4/9	PL36	9/9	UY41	6/6	BFY51	4/6	OC71	2/–
30P19	11/–	EF183	6/3	PL81	7/6	UY85	5/6	BFY52	5/–	OC72	2/–
30PL1	15/–	EF184	6/3	PL82	5/9	2N404	6/–	BF163	4/–	OC75	2/–
30PL13	15/–	EH90	6/6	PL83	6/–	2N2297	4/6	BY100	3/6	OC76	3/–
30PL14	15/–	EL33	12/–	PL84	6/3	2N2369A	4/3	BY126	6/6	OC77	3/4
CL33	19/6	EL41	9/3	PL500	12/3	2N3866	20/–	BY234	4/–	OC78	3/–
CY31	7/9	EL84	4/6	PL504	13/–	AAZ13	3/6	BY236	4/–	OC78D	3/–
DY87	5/9	EL95	5/–	PY33	9/6	AC107	3/6	BY238	4/–	OC81	2/–
E88CC	12/–	EM80	5/9	PY81	5/–	AC113	5/–	BYZ11	5/–	OC81D	2/–
EABC80	6/–	EM81	7/6	PY82	5/–	AC126	2/–	BYZ12	5/–	OC82	2/3
EAF42	7/6	EM84	6/–	PY83	5/6	AC127	2/–	BYZ13	5/–	OC83	2/–
EB91	2/3	EM85	11/–	PY88	6/3	AC128	2/–	GET103	4/–	OC84	3/–
EBC41	9/6	EM87	6/6	PY800	6/6	AC154	5/–	GET113	4/–	OC123	4/6
EBC81	6/3	EY51	6/6	PY801	6/6	AC156	4/–	GET116	7/6	OC169	3/9
EBF80	5/9	EY87	6/–	U25	13/–	AC157	5/–	GET119	4/6	OC170	2/6
EBF83	7/–	EZ40	7/3	U26	10/6	AD140	8/–	GET573	8/6	OC171	3/4
EBF89	5/9	EZ80	3/9	U191	12/6	AD149	8/–	GET587	8/6	OC172	4/–
EC92	6/6	EZ81	4/6	U301	12/6	AD162	9/–	GET873	4/–	OC200	5/–
ECC81	4/–	KT88	29/6	UABC80	5/9	AF114	4/–	GET887	4/6	OC202	5/6
ECC82	4/6	KTW62	12/6	UAF42	9/6	AF115	3/–	GET889	4/6	OC203	5/6
ECC83	4/6	PC86	10/–	UBC41	7/6	AF116	3/–	GET890	4/6	OC205	7/6

Terms of business: Cash with order only. No C.O.D. Post/Packing 6d. per item. Orders over £5 post free. All orders despatched same day as received. Complete catalogue including transistor section and components with terms of business 6d. Any parcel insured against damage in transit for 6d. extra.
Business hours: 9 a.m.–5.30 p.m. Saturdays 9 a.m.–1 p.m.

TECHNICAL TRAINING by ICS IN RADIO, TELEVISION AND ELECTRONIC ENGINEERING

First-class opportunities in Radio and Electronics await the I C S trained man. Let I C S train YOU for a well-paid post in this expanding field.

I C S courses offer the keen, ambitious man the opportunity to acquire, quickly and easily, the specialized training so essential to success.
Diploma courses in Radio/TV Engineering and Servicing, Electronics, Computers, etc. Expert coaching for:

* **INSTITUTION OF ELECTRONIC AND RADIO ENGINEERS**
* **C. & G. TELECOMMUNICATION TECHNICIANS CERTS.**
* **C. & G. ELECTRONIC SERVICING**
* **R.T.E.B. RADIO AND TV SERVICING CERTIFICATE**
* **RADIO AMATEURS EXAMINATION**
* **P.M.G. CERTIFICATES IN RADIOTELEGRAPHY**

Examination Students Coached until Successful.

NEW SELF-BUILD RADIO COURSES
Build your own 5-valve receiver, transistor portable, signal generator, multi-test meter and professional-type valve voltmeter—**all under expert guidance**

POST THIS COUPON TODAY and find out how I C S can help YOU in your career. Full details of I C S courses in Radio, Television and Electronics will be sent to you by return mail.

MEMBER OF ASSOC. OF BRITISH CORRESPONDENCE COLLEGES.

INTERNATIONAL CORRESPONDENCE SCHOOLS
Dept. 248, Intertext House, Parkgate Road, London, S.W.11.

NAME .....

ADDRESS .....

Block Capitals Please

..... 8.68

www.americanradiohistory.com

NEW STYLE SELF-BINDER

for "The Radio Constructor"

The "CORDEX" Patent Self-Binding Case will keep your issues in mint condition. Copies can be inserted or removed with the greatest of ease. Rich maroon finish, gold lettering on spine.

Specially constructed Binding Cords are made from Super Linen of great strength, very hard twisted and twice doubled. They are attached to strong RUSTLESS Springs under tension, and the method adopted ensures PERMANENT RESILIENCE of the Cords. Any slack that may develop is immediately compensated for, and the Cords will always remain taut and strong. It is impossible to overstretch the springs, as a safety check-device is fitted to each.

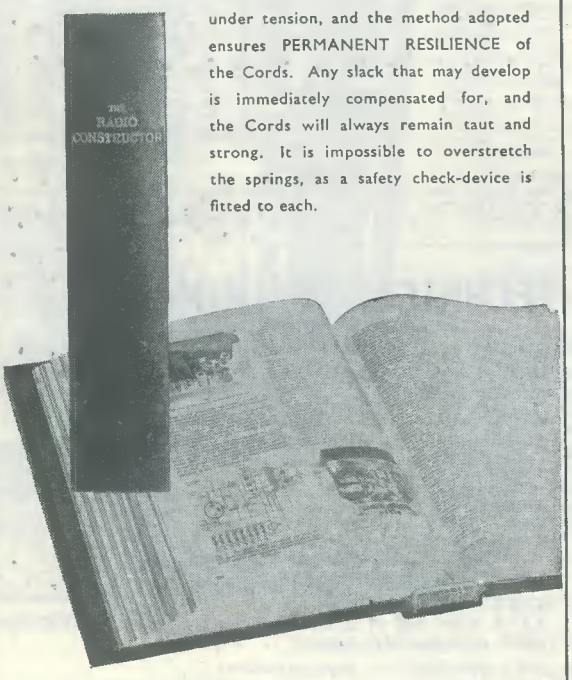

PRICE 15/- Post Free

Available only from:—

Data Publications Ltd.

57 Maida Vale London W9

SMALL ADVERTISEMENTS

continued from page 65

JOIN THE INTERNATIONAL S.W. LEAGUE. Free Services to members including Q.S.L. Bureau. Amateur and Broadcast Translation. Technical and Identification Dept.—both Broadcast and Fixed Stations, DX Certificates, contests and activities for the SWL and transmitting members. Monthly magazine, *Monitor*, containing articles of general interest to Broadcast and Amateur SWLs, Transmitter Section and League affairs, etc. League supplies such as badges, headed notepaper and envelopes. QSL cards, etc., are available at reasonable cost. Send for League particulars. Membership including monthly magazine, etc. 35s. per annum.—Secretary, ISWL, 60 White Street, Derby.

"MEDIUM WAVE NEWS" Monthly during DX season—Details from: K. Brownless, 7 The Avenue, Clifton, York.

TECHNICAL DRAWINGS, Artwork, etc. Electronic and Radio Circuits a speciality. Moderate charges.—B. P. Meaney, 43 Forest Road, Worthing, Sussex.

FOR SALE: H.R.O., six coils, p.u., £15. Hallicrafter, SX 28, £25. Both in very good condition. Dowson, 39 Victoria Street, Scarborough, Yorks.

VALVES, COMPONENTS, MAGAZINES for disposal. S.A.E. list. Toms, "High View", Frittenden, Cranbrook, Kent.

ARE YOU A MOTORING ENTHUSIAST? The Seven Fifty Motor Club caters for all types of motor sport—racing, rallies, hill climbs, etc. Monthly Bulletin free to members. For full details write to: The General Secretary, Colin Peck, "Dancer's End," St. Winifred's Road, Biggin Hill, Kent.

FOR SALE. 20 watt motor generator, ex-Air Ministry, war surplus, 12V at 4A d.c. in, 480V at 0·04A out, £2. Radiation Monitor Ltd., utility geiger counter, £3. Soxhlet extractor, glass, with Liebig condenser to match, unused, £5. Box of weights, 0·01 to 50gm., 30s. All plus postage.—Box No. F330.

WANTED: Copy of "*The Radio Constructor*" for August 1964. C. Lindars, 52 Heathcote Drive, East Grinstead, Sussex.

POSTAL ADVERTISING? This is the Holborn Service. Mailing lists, addressing, enclosing, wrappering, facsimile letters, automatic typing, copy service campaign planning, design and artwork, printing and stationery. Please ask for price list.—The Holborn Direct Mail Company, Capacity House, 2–6 Rothsay Street, Tower Bridge Road, London, S.E.1. Telephone: 01–407–1495.

ILLUSTRATIONS and circuit diagrams of your equipment drawn to your required standards.—M. J. Piper, 10 Lismore Road, Whitstable, Kent.

FOR SALE. Decca/Stereo amplifier, full, transistorised. Input sensitivity 70μ/V. Power output 5 watts per channel. Output impedance 15Ω. High quality reproduction. £14.—Telephone: PUTney 3724.

FOR SALE. Metrix multimeter £10. High frequency signal generator £12. Wayne-Kerr capacitor-resistance bridge £8. Willamson amplifier £5, etc., etc. All in perfect order. Owner retired. Buyer collects. Badman, 2 Montague Road, Sheringham, Norfolk. Telephone: 2502.

continued on page 67

www.americanradiohistory.com

SMALL ADVERTISEMENTS

continued from page 66

WANTED TO PURCHASE. Denco coil turret, type CT7/B. Urgently required to complete construction of receiver. N. G. Edmunds, 16 Dawlish Drive, Styvechale, Coventry, Warwickshire.

WANTED. Television (early models), tape recorder and transistor service sheets. Any quantity. State price.—Box No. F338.

FOR SALE. Ex-Service clock, by Waltham Watch Co., 24 hr. dial, with Civil date dial. Seconds hand, 8-day. 3 inch diameter panel mounting. £5. Box No. F339.

SUGAR CUBE SIZE TRANSMITTERS. From 30/– each. Smallest British Built transmitters available. S.A.E. for free details. (H.P. terms available). Mr. Bobker. Box No. F340.

FOR SALE. Airmec Televet 259 complete TV tester, £40 o.n.o. Mint condition, cost £70. Also Taylor 45C valve tester, as new, £20. M.T., 40 Witley Court, Coram Street, London, W.C.1.

HEAR THROUGH WALLS. World's smallest wireless microphones (bugs). Rifle Bullet size, precision factory made, completely self-contained, runs on small battery. As sole distributors we offer to readers at £5 10s. 0d., post free. Also shirt button size microphones, many uses, 20/–. Box No. F341.

MOTORISTS. Dimmed headlight conversion kit. All necessary parts plus full fitting instructions. Includes: Sealed relay, resistor, diode, brackets, connectors, etc. 12/6d. plus 1/6d. p. & p. Or instructions only, 2/– plus s.a.e. Box No. F342.

GENUINE BRAND NEW Silicon Planar transistors. Postage 6d. 2N2369, 650MHz 4/6d., BC108 3/3d., 600V PTRV 1 amp. silicon rectifiers 4/–. E88CC valves 5/6d. Metal oxide and H.S. resistors. Details and lists, s.a.e. Box No. F343.

PRINTED CIRCUITS made to your negatives or transparent master positives. 1 board to 250 boards. We will produce master to your circuit diagram if required. Bideford Graphic Arts, Torridge Hill, Bideford, North Devon. Telephone Bideford 4991.

ESSEX GARDENERS. Buy your bedding and rock plants, shrubs, etc., also cacti from May's Nurseries, 608 Rayleigh Road, Hutton, Brentwood, Essex. Callers only. Monday to Saturday.

PROPERTIES for sale and to let in London and suburbs. Apply to Maggs & Stephens, Estate Agents, 229 Maida Vale, London, W.9. MAIda Vale 8123.

INNOVATION IN DX CLUBS ANNOUNCED! Formed in October, 1965, the Radio New York Worldwide Listeners Club now has 3,600 members in 86 countries! A unique club offering shortwave listeners monthly magazines containing listening tips and technical features, numbered wallet-sized membership cards and gold 8½in. by 11in. membership certificates. Multi-lingual report forms available for cost of postage. "We must be doing something right!" Find out . . . join now!" Send 7s. 2d. (crossed domestic money order) for one year's membership to: The Radio New York Worldwide Listeners Club, 485 Madison Avenue, New York 10022, U.S.A.

PLAIN-BACKED NEW STYLE SELF-BINDERS

for your other magazines

(max. format 7½" x 9½")

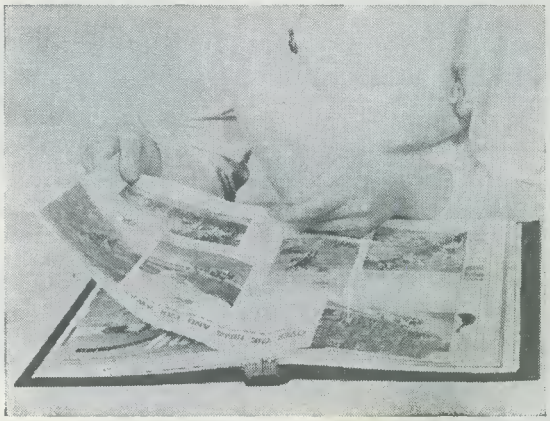

The "CORDEX" Patent Self-Binding Case will keep your copies in mint condition. Issues can be inserted or removed with the greatest of ease. Rich maroon finish. Specially constructed Binding Cords are made from Super Linen of great strength, very hard twisted and twice doubled. They are attached to strong RUSTLESS Springs under tension, and the method adopted ensures PERMANENT RESILIENCE of the Cords. Any slack that may develop is immediately compensated for, and the Cords will always remain taut and strong. It is impossible to overstretch the springs, as a safety check-device is fitted to each.

COLOURS: MAROON OR GREEN

(Please state choice)

PRICE 14/6 Post Free

Available only from:—

Data Publications Ltd.

57 Maida Vale London W9

www.americanradiohistory.com

CHASSIS and CASES by Smith's of EDGWARE ROAD

H. L. SMITH & CO. LTD.
287/9 Edgware Road
London W2
TEL: 01–723 5891

CASES — ALUMINIUM, SILVER HAMMERED FINISH

Type	Size	Price	Type	Size	Price
N	8×6×2"*	18/–	W	12×7×7"	37/6
N	6×6×3"	17/6	W	15×9×8"	48/6
N	4×4×2"	11/–	Y	8×6×6"	29/–
U	4×4×4"	11/–	Y	12×7×7"	45/–
U	5½×4½×4½"	17/–	Y	13×7×9"	50/6
U	8×6×6"	23/–	Y	15×9×7"	53/6
U	9½×7½×3½"	24/–	Z	17×10×9"	72/6
U	15×9×9"	49/–	Z	19×10×8½"	78/–
W	8×6×6"	23/–			

*Height

Type N has removable bottom, Type U removable bottom or back, Type W removable front, Type Y all screwed construction, Type Z removable back and front.

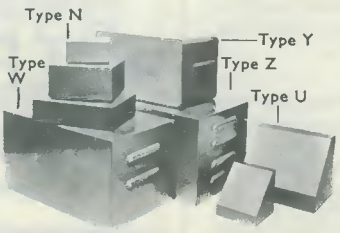

BLANK CHASSIS—Same day Service

Of over 20 different forms made up to YOUR SIZE. (Maximum length 35", depth 5".)

SEND FOR ILLUSTRATED LEAFLETS or order straight away, working out total area of material required (including waste) and referring to table below which is for four-sided chassis in 16 s.w.g. aluminium.

48 sq. in.	5/–	176 sq. in.	10/4	304 sq. in.	15/8
80 sq. in.	6/4	208 sq. in.	11/8	336 sq. in.	17/–
112 sq. in.	7/9	240 sq. in.	13/–	368 sq. in.	18/4
144 sq. in.	9/–	272 sq. in.	14/4	and pro rata	
P. & P. 3/–		P. & P. 3/6		P. & P. 4/6	

Discounts for quantities. More than 20 different sizes kept in stock for callers.

FLANGES (½" or ⅜"), **6d.** per bend.

STRENGTHENED CORNERS, 1/– each corner.

PANELS

Any size up to 3ft at 6/- sq. ft. 16 s.w.g. (18 s.w.g. 5/3).

Plus postage and packing

HIGH GLOSS METALLIC HAMMERED ENAMEL

'Makes fantastic difference to Panels' so say hundreds of enthusiastic users. 'Crackle' pattern appears like magic. Dries hard glossy finish. Scratch-proof, resists heat and liquid. Simply brush-on. No undercoat. Air dries 15 mins. Lt. & Dk. Blue; Bronze; Silver; Green; Black. Send for details or send 8/- (plus 1/9 post.) for ½pt. Trial Tin, colour samples and instructions.

FINNIGAN SPECIALITY PAINT MANUFACTURERS, DEPT. RC, STOCKSFIELD, NORTHUMBERLAND. Tel. 2280.

Hammerite

BRUSH OR SPRAY-ON

"V" NOTCHES G.P.O. TYPE RELAY CONTACT SPRINGS

WANTED

Contact springs as shown

BEST PRICES PAID

S.a.e. to "Lanco", 76 Sedgemoor Road, Willenhall, Coventry, Warwickshire

THE NEW JUPITER TWO BAND TRANSMITTER

For the magnificent Jupiter two band transmitter by F. G. Rayer G30GR which was described in Radio Constructor June 1968, you can obtain all your requirements from Electroniques.

Electroniques (Prop. STC) Limited, Edinburgh Way, Harlow, Essex.

electroniques

BOUND VOLUME No. 20 of "The Radio Constructor"

—AUGUST 1966 to JULY 1967—

Comprising 780 pages plus index

FOR YOUR LIBRARY

PRICE 32/6 Postage 4/6

Bound Volume No. 21 (August 1967 to July 1968) will be available mid-September

Special discount of 10/- for regular readers

As a further service to regular readers, it is no longer necessary to return the complete issues making up a volume.

Just cut the heading from each month's contents page, including title and month of issue, and this will be sufficient evidence of readership to qualify for the discount.

Thus regular readers will still retain their old copies, while having a splendid bound volume containing issues in mint condition.

PRICE 22/6 Postage 4/6

Limited Number of Volume 19 (August 1965–July 1966) still available. *Same prices as above.*

Available only from:

DATA PUBLICATIONS LTD., 57 MAIDA VALE, LONDON, W9

Please mention **THE RADIO CONSTRUCTOR** when writing to advertisers

www.americanradiohistory.com

THE RADIO CONSTRUCTOR

Price 3/- each, postage 6d.

Annual Subscription 42/-, post free.

Bound Volumes Vol. 19 August 1965 to July 1966 **32/6,** postage **4/6.**
Vol. 20 August 1966 to July 1967 **32/6,** postage **4/6.**

Cordex Self-Binders With title "The Radio Constructor" on spine, **15/-,** post free.
With no title on spine **14/6,** post free.

DATA BOOK SERIES

DB5 TV FAULT FINDING
124 pages. Price **8/6,** postage 8d.

DB6 THE RADIO AMATEUR OPERATOR'S HANDBOOK
64 pages. Price **5/-,** postage 5d.

DB14 SHORT WAVE RECEIVERS FOR THE BEGINNER
72 pages. Price **6/-,** postage 6d.

DB15 TWENTY SUGGESTED CIRCUITS
48 pages. Price **3/6,** postage 5d.

DB16 RADIO CONTROL FOR MODELS
192 pages. Price **15/-,** postage 9d.

DB17 UNDERSTANDING TELEVISION
512 pages. Price **37/6,** postage 3/-

PANEL-SIGNS TRANSFERS

Six sheets in each set

Set 3: WORDING—White

Set 4: WORDING—Black

Set 5: DIALS—Control Panels have a clear background

Set 6: DIALS—Control Panels have a black background

Price per set **4/6,** postage 4d.

I enclose Postal Order/Cheque for.....in payment for.....

NAME .....

ADDRESS .....

.....

(Please use Block Capitals for both name and address)

Postal Orders should be crossed and made payable to Data Publications Ltd.
Overseas customers please pay by International Money Order
All publications are obtainable from your local bookseller

Data Publications Ltd., 57 Maida Vale, London W.9

www.americanradiohistory.com

SOLID STATE HIGH FIDELITY AUDIO EQUIPMENT

POWER AMPLIFIERS — PRE-AMPLIFIERS/CONTROL UNITS — POWER SUPPLIES

BRITISH MADE

◀ MP3

◀ SP4-A

SP6-2 ▼

- **MP3** mono preamplifier/control unit **£6.19.6** p.p. 3/–
- **SP4-A** mono/stereo version of MP3 **£11.19.6** p.p. 4/6
- **SP6-2** mono/stereo (takes mag. pick-up as well) **£15.10.0** p.p. 5/–
- **MPA12/3** 12 watt amplifier 3 to 5 ohm output **£4.10.0** p.p. 2/6
- **MPA12/15** 12 to 16 ohm 12 watt **£5.5.0** p.p. 2/6
- **MPA25** 25–30 watt amplifier for 7½–16 ohm speaker **£7.10.0** p.p. 3/6
- **PS24/40** power supply for MPA12/3 & MPA12/15 **£3.12.6** p.p. 3/–
- **MU24/40** choke version **£4.10.0** p.p. 3/6
- **MU60** power supply for MPA25 **£4.17.6** p.p. 4/6

16 PAGE BROCHURE ON REQUEST. No 21
All units sold separately.

All systems complete with grey/silver panels and matching silver knobs.

Audio Equipment developed from Dinsdale Mk. II—each unit or system will compare favourably with other professional equipment selling at much higher prices. Brief details are below:

	Complete suggested systems	*Price*
1A	MP3+MPA12/3+MU24	£15.5.0 p.p. 5/-
2A	MP3+MPA12/15+MU40	£16.0.0 p.p. 5/-
4	MP3+(2) MPA12/15+MU40	£21.2.6 p.p. 7/-
6	MP3+MPA25+MU60	£18.15.0 p.p. 7/-
8A	SP4-A+(2) MPA12/15+MU40	£26.0.0 p.p. 8/6
10	SP6-2+(2) MPA12/15+MU40	£29.5.0 p.p. 8/6
12A	SP4-A+(2) MPA25+(2) MU60	£35.10.0 p.p. 10/-
13	SP6-2+(2) MPA25+(2) MU60	£38.17.6 p.p. 10/-

THE FINEST VALUE IN HIGH FIDELITY—CHOOSE A SYSTEM TO SUIT YOUR NEEDS AND SAVE POUNDS

COMPLETE RANGE OF SUITABLE PLAYER DECKS, SPEAKERS AND TUNERS IN STOCK.—ASK FOR LATEST LIST 16

NEW! MODEL 8-TRANSISTOR INTEGRATED 7 WATT AMPLIFIER AND PREAMPLIFIER–MA7

WITH FULL BASS—TREBLE AND VOLUME CONTROLS

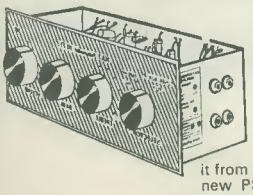

A brilliant new design suitable for home or portable installations. Designed for use with magnetic and crystal/ceramic cartridges, radio tuners, microphones, tape head replay and auxiliary inputs. Output is for 3 to 16 ohm speakers.

It favours the user in so many ways—with fantastic power, with far greater adaptability, with freedom to operate it from batteries or mains power supply unit (the new PS20 is ideal for this), hi-fi installations, electronic guitars and organs, P.A. installations, intercom, systems, etc. This true 7 watt amplifier is supplied ready built, tested and guaranteed.

For complete listening satisfaction.

FOR ONLY £8.10.0 P.P. 4/–

(Optional Mains Unit PS20 **62/6** p.p. 3/–)

ILLUSTRATED BROCHURE No. 12

FM STEREO DECODER

7 Mullard Transistors. Printed Circuit Design with Stereo Indicator. For use with any valve or transistor FM. Uses pot cores to Mullard design and ger. and silicon transistors. As used by B.B.C. and G.P.O.

COMPLETE KIT PRICE £5.19.6
Ask for Brochure 4. **P.P. 2/6**

BUILD A QUALITY TAPE RECORDER

With a Martin Recordakit.

*TWO-TRACK. Deck. Amplifier. Cabinet and speaker. Complete kits with MICROPHONE 7in. 1,200ft. tape, spare spool. Today's Value £55. **36 gns.** **P.P. 22/6**

*FOUR-TRACK. Deck. Amplifier. Cabinet and speaker. Complete kits with MICROPHONE 7in. 1,200ft. tape, spare spool. Today's Value £60. **39 gns.** **P.P. 22/6**

Ask for Brochure 6.

SEND FOR FULL DETAILS ON THESE BRITISH MADE *PRODUCTS* FREE *ON REQUEST*

VHF FM TUNER

87/105 Mc/s Transistor Superhet. Geared tuning. Terrific quality and sensitivity. For valve or transistor amplifiers. 4 x 3½ x 2½in. Complete with dial plate. 5 Mullard Transistors, plus 4 Diodes. (Cabinet Assembly 20/– extra.)

TOTAL COST TO BUILD £6.19.6
Ask for Brochure 3. **P.P. 2/6**

AUTO-BAN TRANSISTOR CAR RADIO. British Made

Ask for Brochure 15.

6-Transistor MW/LW Car Radio 12 volt operated. 3 watt output. Push-button, wavechange. Supplied built, boxed, ready to use with Speaker and Baffle. Car fixing kit and manufacturers' current guarantee. Special Bargain Offer. Positive or Negative Earth.

De-Luxe Five Push-button version £12/12/– P.P. 4/6 10 gns. P.P. 4/6

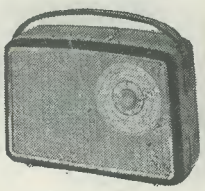

7-TRANSISTOR MW/LW SUPERHET PORTABLE NEW!

New printed circuit design with full power output. Fully tunable on both mw/lw bands. 7 Transistors plus diode, push-pull circuit. Fitted 5in. speaker, large ferrite aerial and MULLARD transistors. Easy to build with terrific results. All local, and Continental stations.

TOTAL COST TO BUILD £6.19.6 P.P. 4/–
Ask for Brochure 1.

SEND FOR FREE COPY

★ **Largest range over 1000 types**
★ **S.C.R's from 5/–**
★ **Field Effect T'sistors from 8/6**
★ **Power Transistors from 5/–**
★ **Diodes & Rectifiers from 1/6**

Send for Free List No. 36.

GARRARD DECKS

LATEST MODELS—COMPLETE RANGE IN STOCK.

From £5.19.6

Send for Illustrated Brochures 16/17

MAYFAIR PORTABLE ELECTRONIC ORGAN

DESIGNED BY L. W. ROCHE

Deferred terms available. COMPLETE KIT. Deposit £29.19.0. 12 monthly payments of £7. TOTAL £113.19.0. READY BUILT & TESTED. Deposit £36.8.0 and 12 monthly payments of £9. Total £144.8.0.

Build this instrument stage by stage in your own home.
A truly portable instrument for all enthusiasts.
Fully TRANSISTORISED POLYPHONIC, British design.
Call in for a DEMONSTRATION.
EXPORT PRICES ON APPLICATION

TOTAL COST 99 GNS.

ORGAN COMPONENTS
We carry a comprehensive stock of organ components for TRANSISTOR AND VALVE FREE PHASE designs.

CATALOGUE

The most COMPREHENSIVE — CONCISE — CLEAR — COMPONENTS CATALOGUE. Complete with 10/– worth discount vouchers FREE WITH EVERY COPY

★ **32** pages of transistors and semi-conductor devices, valves and crystals.
★ **200** pages of components and equipment.
★ **65** pages of microphones, decks and Hi-Fi equipment.

SEND TODAY 8/6 POST PAID

Completely new 9th 1968 Edition
300 BIG pages
6,500 items
1,200 illustrations

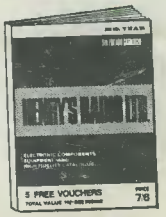

HENRY'S RADIO LTD

HR

OPEN MON.–SAT. 9 a.m.–6 p.m. THURS. 9 a.m.–1 p.m.

TWO STOP SHOPPING FOR ALL YOUR NEEDS

303 Edgware Road, London, W.2. Mail Order Dept. all types of Components, Organ Dept. (01) 723-1008/9
309 Edgware Road, London, W.2. High Fidelity Sales, P.A. and Test Equipment, Record Decks (01) 723-6963

www.americanradiohistory.com