THE MAPLIN MAGAZINE

ELECTRONICS and Beyond

Sailing the Internet

Video Projectors

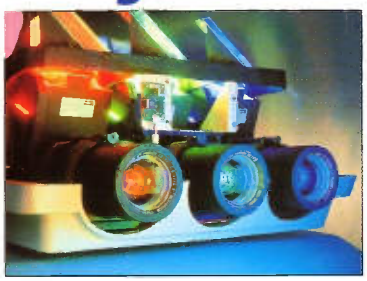

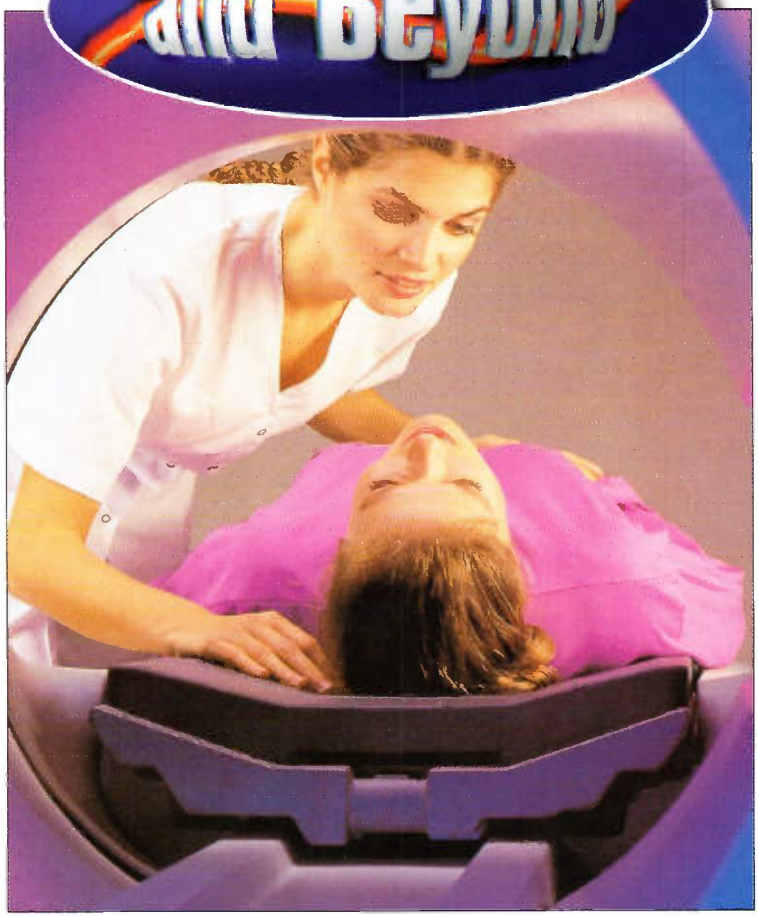

9 771363 638094 03

MARCH 1997 NO. 111 £2.25

Best Value Electronics Monthly

http://www.maplin.co.uk

Lightning – It's Nature

More Internet News inside

Magnetic Resonance Imaging

Clear images from within

EXCLUSIVE COMPETITION

Your chance to win a day out at ND COMTEC with the BT round-the-world yacht race

PROJECTS FOR YOU TO MAKE

Continuity Tester ◆ Video Distribution Amp
Mains Wiring Tester ◆ I/O Interface Card

Britain's favourite monthly magazine for electronics!

FLUKE 7 SERIES ELECTRICAL TESTERS

Automatic Selection Mode

Automatic reading of AC/DC volts

400-count digital display

Continuity beeper

400Ω range

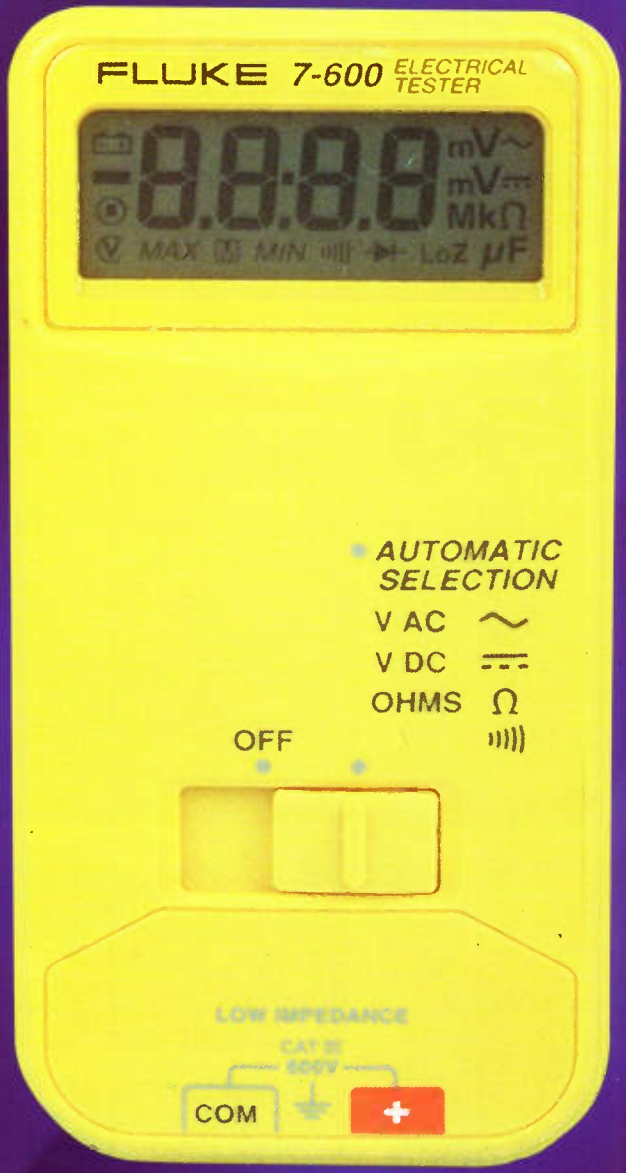

For fast, accurate test of electrical power, then nothing beats the easy-to-use Fluke 7-300 and 7,600 Electrical Testers – there is just one on/off switch. The Testers automatically switch to the right setting – AC/DC volts, continuity or Ohms, with the result displayed on a clear 4000-count digital display.

The 7-300 measures up to 300V AC/DC and is ideal for the home and general electrical needs. The 7-600 measures up to 600V AC/DC, and is ideal for fast voltage and continuity checks in industrial environments including the growing number of low-voltage DC systems. These Electrical Testers set a whole new standard in professional performance at a low price and are backed with a two year guarantee.

Supplied with hard point test leads, instruction manual and fitted with 9V battery.

Fluke 7-300
£49.35
Order As JJ31J

Fluke 7-600
£69.33
Order As JJ32K

Telephone (01702) 554000

MasterCard VISA AMERICAN EXPRESS Access SWITCH CONNECT

Prices include VAT and are post FREE!

MAPS
MAPLIN PROFESSIONAL

THE MAPLIN MAGAZINE

ELECTRONICS and Beyond

March 1997 Vol. 16 No. 111

Projects

16 Programmable Centronics 24-line Input/Output Card
Part 1 of a superb general-purpose 24-line I/O Card, fitted externally to a PC's Centronics printer port.

27 Video Distribution Amplifier
Featuring adjustable video gain and HF boost, four independent outputs enable the simultaneous feeding of up to four video recorders or monitors from one input source.

36 Continuity Tester
Build yourself a useful continuity tester for the quick and easy checking of fuses, bulbs, wiring, etc.

48 Mains Socket Wiring Tester
Identify potentially lethal wiring faults in your mains outlet sockets using this handy plug-in tester.

Features

8 Magnetic Resonance Imaging
Douglas Clarkson examines body scanning technology used in the diagnosis and treatment of hospital patients.

22 What's in a Name?
Greg Grant chronicles how the terms Baud and Erlang came into being, and how their values are calculated.

24 Sailing the Internet
Alan Simpson describes how BT set up a global Internet multimedia library. Plus! Enter our competition to visit the ND COMTEC library headquarters at Newbury, Berkshire – see page 26!

32 Lightning – It's Nature
This 2-part feature by Greg Grant, covers past and present understanding of lightning, its causes and effects.

41 Developing Applications around the PIC Architecture
The fifth part of PIC Programming by Stephen Waddington covers the instruction set for the PIC16C84 and the development of microcontroller-based applications.

52 Intelligent Systems
Frank Booty delves into the intriguing world of artificial intelligence, neural networks and fuzzy logic systems.

58 Audio Delay Line Systems
The third instalment of this series by Ray Marston looks at modern digital audio delay line systems and explains their operating principles.

65 Circuit Maker
A reader's forum for circuits, hints and tips. This month features a Garden Gate Alarm by Paul Nelson.

66 Network Computers at Comdex
Stephen Adams reports on the largest computer trade show in the world, held in Las Vegas, USA.

70 Video Projectors
Reg Miles investigates the technology and forthcoming developments of Video Projectors, which are growing in popularity as the cheapest means of showing large images.

Regulars

2 News Report
5 How to Subscribe
6 Back Issues
20 Air Your Views
31 What's On & Diary Dates
47 Comment
55 Research News
69 Classified Adverts
76 @Internet
79 Next Issue
80 Technology Watch

Cover pictures: ©Copyright 1997 Maplin Electronics PLC. All rights reserved.

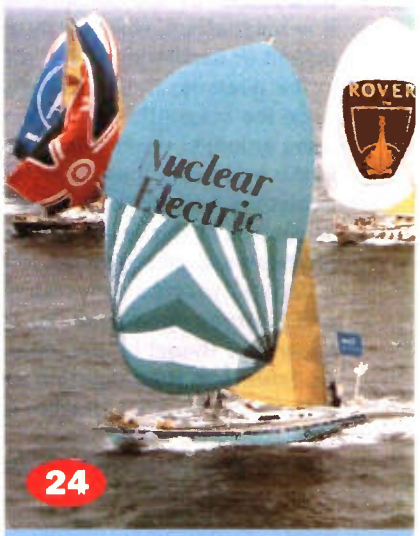

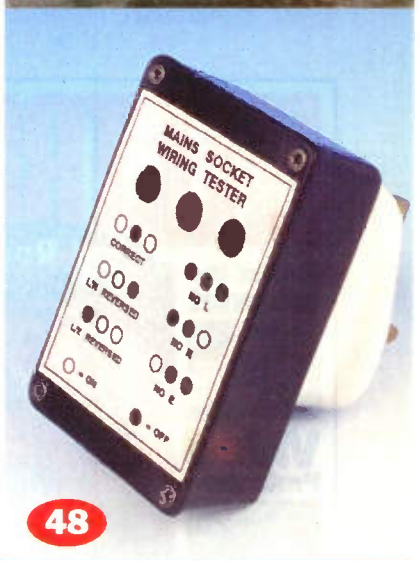

Editorial
Editor Paul Freeman-Sear BSc (Hons)
Technical Author Maurice Hunt BSc (Hons)
Editorial Assistant Lynda Hardy
News Editor Stephen Waddington BEng (Hons)
Drawing Office Ross Nisbet
Technical Illustrators Paul Evans, Kevin Kirwan Dip.Comp.

Production
Production Controller Jason Hyatt
Design Layout Artist David Holt
Photography Librarian Tracy Swann
Published by Maplin Electronics plc., P.O. Box 777, Rayleigh, Essex, SS6 8LU.
Tel: (01702) 554155.
Fax: (01702) 554001.
Lithographic Reproduction by Planagraphic Studios, 18 Sirdar Road, Brook Road Ind. Estate, Rayleigh, Essex SS6 7UY.
Printed by St Ives (Andover) Ltd., West Portway, Andover SP10 3SF.

Management
Manager Paul Freeman-Sear BSc (Hons)
Marketing Services Manager Steve Drake

Subscriptions
Maureen Harvey
Tel: (01702) 554155 Ext. 311.

Advertising
Advertisement Manager Paul Freeman-Sear
Tel: (01702) 554155 Ext. 288.
Fax: (01702) 556987.

UK Newstrade Distribution
Seymour, Windsor House, 1270 London Road, Norbury, London SW16 4DH.
Tel: +44 (0)181 679 1899.
Fax: +44 (0)181 679 8907.

ABC AUDIT BUREAU OF CIRCULATIONS CONSUMER PRESS
Member of the Audit Bureau of Circulations.

Copyright 1997 Maplin Electronics PLC.

Copyright: All material is subject to worldwide copyright protection, and reproduction or imitation in whole or part is expressly forbidden. Permission to reproduce printed circuit board layouts commercially or marketing of kits must be sought from the publisher.

Advertisements: Whilst every reasonable precaution is undertaken to protect the interests of readers by ensuring, as far as possible, that advertisements appearing in the current issue of *Electronics and Beyond* are bona fide, the publisher and staff of the magazine cannot give any undertakings in respect of statements or claims made by advertisers, whether on printed page or on loose insert. Readers who have reasonable grounds to believe that they have been misled are advised to contact their local Trading Standards Office.

Editorial: The views of individual contributors/authors are not necessarily those of either the publisher or the editor. Where errors occur corrections will be published as soon as possible afterwards.

Publisher's Statement: Maplin Electronics PLC., take all reasonable care to prevent injury, loss or damage of any kind being caused by any matter published in *Electronics and Beyond*. Save insofar as prohibited by English law, liability of every kind including negligence is disclaimed as regards any person in respect thereof.

ELECTRONICS and Beyond

There has been great advances in bodyscan imaging techniques in more recent years thanks to a technology that is not easily understood. Magnetic Resonance Imaging or MRI as it's now known can produce wonderfully clear images of internal organic structures, namely us. The mechanisms by which this happens starts at the very heart of the atom, within that central core known as the nucleus. As the title suggests, it is magnetism, whether as a constant field, pulsed or oscillating which affects the particles in the nucleus. Their return to the normal state once the magnetic field is removed, depends upon amongst other things, the type of tissue in the body. It is then detected and interpreted in picture form by the computer. The article presented in this issue by Douglas Clarkson provides a challenging but informative read.

We also provide a diverse range of projects and features once again for all to enjoy. Let us know your thoughts and ideas about any topic we feature in the magazine so we can then reflect your needs in further issues.

Paul Freeman-Sear, Publishing Manager

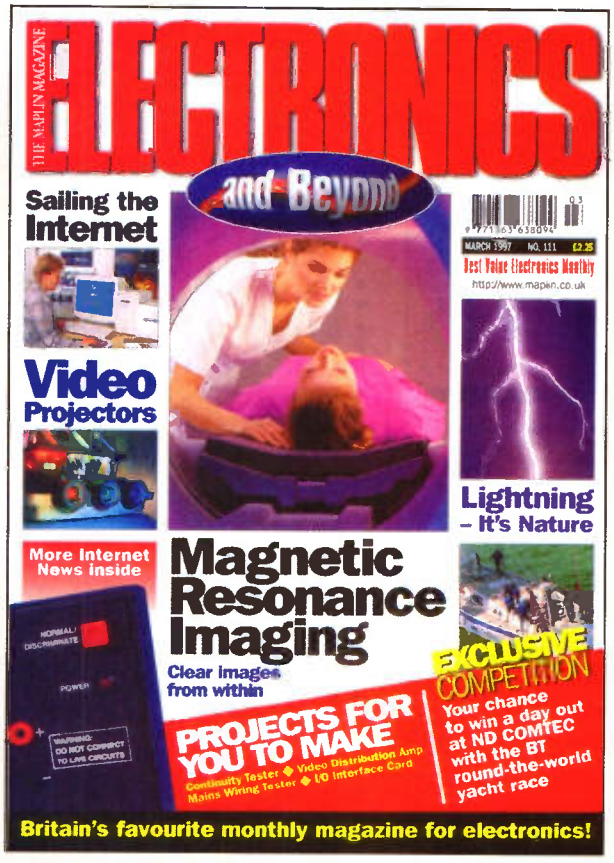

Britain's Best Magazine for the Electronics Enthusiast

NEWS REPORT

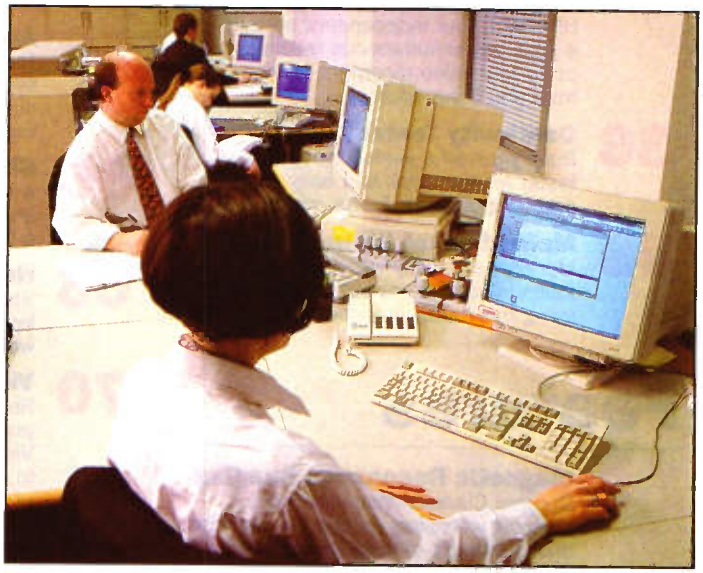

ISE Puts a Million TSB Documents Online

The TSB Bank has completed the computerisation of all its pensions records, capturing more than one million documents onto an electronic document management (EDM) system from information logistics specialist, ISE. The use of ISE systems is now to be extended to manage further areas of TSB's pensions scheme.

Group Pensions Manager, Andrew Parncutt, told *Electronics and Beyond*, "With every single member of our administration staff now online, we have immediate access to data that was previously held on upwards of a million pieces of paper. Information that, at best, took minutes to find can now be retrieved in seconds. All of our members will benefit from what we believe is one of the most efficient pensions systems in Europe."

Contact: ISE, Tel: (0114) 2420419.

Partnership to Develop Cellular and Pager Online Access

Microprocessor operating system developer, Microware Systems, has announced a strategic partnership with mobile communication specialist, Unwired Planet. The two companies have teamed to port Unwired Planet's UPBrowser to Microware's OS-9 Real-Time Operating System. Microware claims that this technology will enable a new generation of digital cellular phones and two-way pagers capable of accessing the Internet or corporate intranet.

For further details, check: **http://www.microware.com**.

Contact: Microware Systems, (01628) 667578.

Search for Top Inventors

The Young Engineers for Britain 1997 competition, a joint venture of the Engineering Council and Young Engineers clubs, is now open for entries from 11 to 19 year olds.

The Young Engineer for Britain – the overall winner in 1997 – will receive a cash prize of £1,000 and £1,500 for their school.

Entry to the competition can be from individuals, teams of up to four and from Young Engineers clubs that have developed an innovative project. Entries are judged at a series of regional finals throughout the UK in June and July.

Last year's winner was Adam James from Pontyclun, Mid-Glamorgan, who developed a revolutionary method of treating serious wrist injuries using a fluid-lined plastic sleeve.

Contact: Engineering Council, Tel: (0171) 240 7891.

Comparative Efficiency

Maxim has introduced a pair of power efficient voltage comparators optimised for either 3 or 5V operation. Each device has three modes of operation: high speed, high-speed with auto-standby and low power. Propagation delays are 28ns in high-speed mode and 820ns in low speed mode.

The auto-standby feature automatically disables the comparator after a programmed interval without an input transition and places it in a low-standby condition. This feature enables a design engineer to conserve power in microprocessor applications such as a credit card reader, which are not used constantly.

Contact: Maxim, Tel: (0118) 9303388.

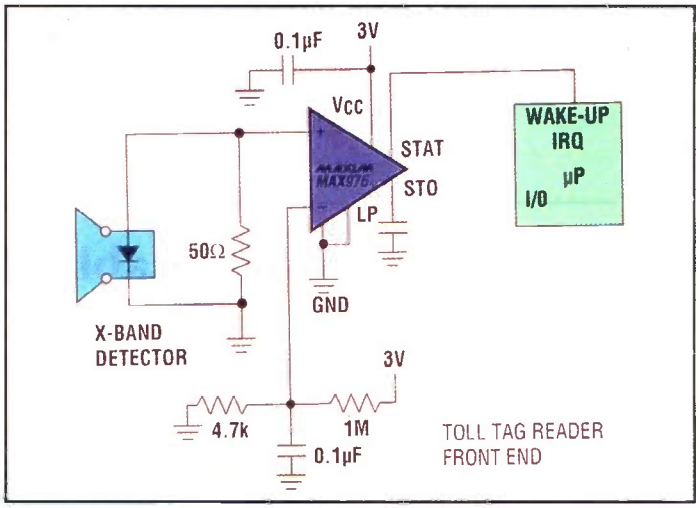

Psion Dacom backs Mobile Initiative

Psion Dacom has become one of the first PC Card manufacturers to join the Mobile Data Initiative (MDI), a project aimed at increasing the integrated use of mobile PC technology and GSM telephone services throughout Europe.

Members of the MDI will encourage businesses across Europe to make use of the GSM telephone network to access corporate data networks and online services while on the move, and to send e-mail and faxes without the need to be connected to a landline.

Founded by Intel and major players in the notebook PC and GSM industries, MDI will make it easier to purchase and employ PC and GSM products and services that are purposely designed to be better integrated.

Figures from Dataquest show that Europe currently has 19 million subscribers to wireless digital voice services, estimated to reach 66 million by the turn of the century. The same figures, however, also reveal that the use of such services for mobile data communications is minimal.

Only one in five GSM phone users has an adapter for connecting their PC or other mobile computing device to the GSM network; and although data communications account for 46·3% of business traffic over landlines, data via GSM connections accounts for only 0·5% of the whole.

For further details, check: **http://www.u-net.com/p-dacom**.

Contact: Psion Dacom, Tel: (01908) 261686.

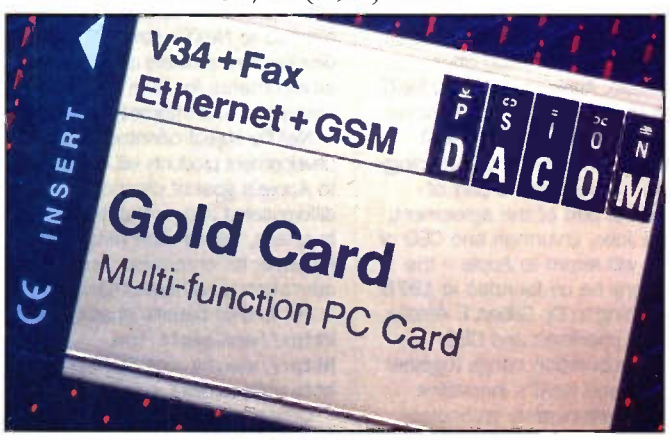

IEE and BCS to Co-operate More Closely

The Institution of Electrical Engineers (IEE) and the British Computer Society (the BCS) have agreed to co-operate more closely to enhance the services they provide. A formal Memorandum of Understanding has been signed by the two organisations.

The President of the IEE, Dr Robert Hawley, told *Electronics and Beyond*, "I am delighted that we have been able to sign this Memorandum. By working together, we can improve the services we provide to members of both the IEE and the BCS. Just as importantly, we can better serve anyone working in the computer industry, whether members or not."

The Memorandum covers such areas as joint regional activities, joint approaches to accreditation of courses and training schemes, joint events, joint policy statements to Government, joint involvement in external events and a sympathetic review of schemes to provide better support to computer system professionals. Joint activities between Younger Members sections of both the IEE and the BCS will be encouraged, there will be collaborative consideration of Continuing Professional Development and increased co-operation at staff level.

For further details, check: **http://www.iee.org.uk**.

Contact: IEE, Tel: (0171) 240 1871.

NEWS BYTES

Billion Dollar Semiconductor Deal

Samsung has signed a 10-year licensing pact with Texas Instruments worth $1billion, covering a broad base of patents for semiconductors, PCs, consumer products and telecommunications equipment. Texas Instruments had sued Samsung for allegedly infringing its patents in the computer chip-making process.

Since 1985, Texas Instruments has started to more aggressively defend alleged unauthorised use of its technology, in a fight to improve the value of intellectual property for the semiconductor industry. Earlier in the year, Texas Instruments reached 10-year deals with Fujitsu, Oki and Matsushita.

For further details, check: http://www.ti.com **or** http://www.samsung.com.

Contact: Samsung, Tel: (0181) 391 8213.

US Robotics Plans Modem Upgrade

Computer users have got used to junking their modems every couple of years, but now US Robotics plans to sell a plug-in module that owners of a 28.8k-bps modem can use to upgrade their data delivery speed to 56k-bps. No price has been set yet, but presumably, the cost of the upgrade will be significantly less than the cost of a brand new ×2 56k-bps modem, which is expected to be less than £120.

For further details, check: **http://www.usr.com**.

Contact: US Robotics, Tel: (01734) 228200.

Spice-up Digital Designs with Affordable Application

Industry standard Spice modelling tools, previously the domain of the corporate design laboratory or university research centre, are now available to electronics engineers, students and enthusiasts at a sensible and affordable price.

Launched this month, B2 Spice V2.0 is a complete Spice analogue modelling package which complements its sister program, B2 Logic, for digital modelling.

B2 Spice uses the SPICE 3F5 engine and is easy to learn, fast and powerful. Simply draw a circuit diagram on the screen and let the software do the rest. With B2 Spice V2.0, there is no maximum circuit size as long as sufficient RAM is available. It includes a host of features, ranging from Fourier analysis to distortion and outputs may be plotted in table or graph format.

The software retails for £210.00 from Norwich-based RD Research.

For further details, check: http://www.elisis.demon.co.uk/rdresearch.

Tel: (01603) 872331.

NEWS BYTES

Stretching Bandwidth

Imedia has developed new data-compression software it says is capable of squeezing up to 24 digital TV channels into the space now used by one analogue channel.

Theoretically, the new technology would allow cable companies to deliver dozens more channels without having to spend millions of dollars upgrading their systems.

Imedia's StatMux splits video segments up into different-sized packets, transmits them in the most bandwidth-efficient manner, and reassembles them seamlessly at the other end.

Current industry products that use statistical multiplexing technology deliver only a 20 to 30% increase in capacity. Time Warner are evaluating the technology for use over their cable networks in the US.

For further details, check: `http://www.imedia.com`.

Contact: Imedia, Tel: +415 975 8000.

BCS Competition Call for Young Professionals

The British Computer Society's (BCS) Programming Competition is now open for entries. The Competition is for teams of up to five people, including a Team Manager.

The Competition provides an unparalleled opportunity to tackle, against the clock, programming tasks using C or C++ software.

All entrants must be in the age range 17 to 30 years inclusive on the day of the particular competition, and members of the BCS. In previous years, the competition has attracted entries from both industry and educational establishments.

For further details, check: **`http://www.bcs.org.uk`**.

Contact: BCS, Tel: (01793) 417425.

Digital's StrongARM Gets Microsoft CE Support

Digital is joining the Microsoft CE bandwagon, and has announced that its StrongARM RISC microprocessor wil be supported by Microsoft Corporation's recently introduced Windows CE software platform for consumer electronics products such as hand-held personal computers, smart phones, and DVD players. The StrongARM SA-110 is the industry's highest-performance low-power, low-cost microprocessor.

For further details, check: `http://www.digital.com/info/semiconductor`.

Contact: Digital Semiconductor, Tel: (01734) 868711.

Nine Ways to Organise Your Life

Not wishing to miss any gap in the market, Sharp's personal organiser division has gone into overdrive. The company has introduced no less that nine new models in the last month. Starting at £7.99 through to £529.99, the new range includes two pen-touch organisers PDA-type devices, three multi-functional models – which include basic software applications – and five databank models – which offer diary, address and telephone functionality.

For further details, check: **`http://www.sharp-usa.com`**.

Contact: Sharp, Tel: (0800) 262958.

Alcohol Sensing

The potential now exists for the hobbyist to design alcohol breath test equipment, after Japanese transducer-company Best Sensors, announced the availability of a discrete alcohol sensor.

By combining the Best gas sensor, BGS-201, with a custom design 8-bit microcontroller solution, Best Sensors believes it has designed the first low-cost, off-the-shelf alcohol breath test solution.

The sensor and microcontroller combination works by monitoring the concentration of Ethanol gas, a by-product of alcohol, in the mixture of air exhaled over the sensor.

Best Sensor believes that it has calibrated the relationship between the level of Ethanol in an individuals' breath and the level of alcohol in the bloodstream using the alcohol sensor, to within 1% accuracy.

The microcontroller outputs the concentration of alcohol per litre of blood in binary coded decimal format.

Contact: Best Sensors, Tel: +81 45 402 0068.

Single Cable Home Standard

Philips reckon that it's time that consumers used a single set of cables to connect electronics equipment around the home rather than the traditional mix of coaxial, data, loudspeaker and video cables. It has developed an IEEE 1994-1995 high-speed serial bus standard interface as a mechanism to interconnect digital audio devices, VCRs, cameras and PCs.

Contact: Philips, Tel: +31 40 272 20 91.

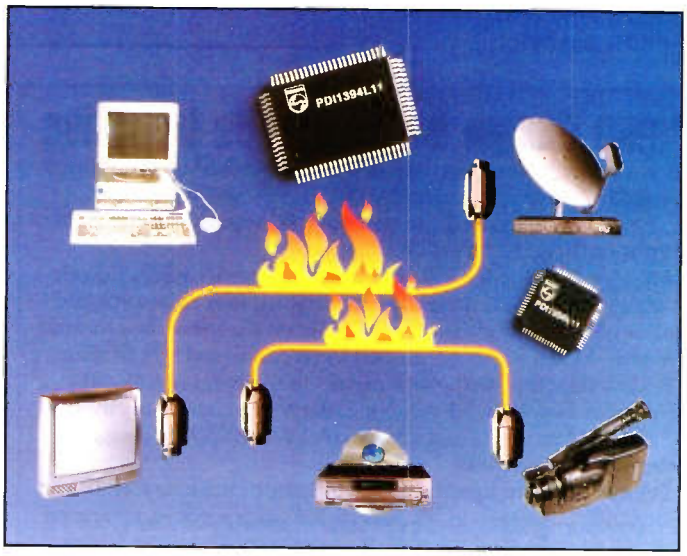

Apple Shopping for Operating System – Purchases NeXT

After ditching Copeland, Apple has been hunting round for a replacement Operating System. First, it tried BeOS, but the management weren't interested in Apple's $100million offer.

Instead, Apple has gone for NeXT for a mere $400million. Pending regulatory approvals, all NeXT products, services, and technology research will become part of Apple. As part of the agreement, Steve Jobs, chairman and CEO of NeXT, will return to Apple – the company he co-founded in 1976 – reporting to Dr. Gilbert F. Amelio, Apple's chairman and CEO.

The acquisition brings together Apple's and NeXT's innovative and complementary technology portfolios and significantly strengthens Apple's position as a company advancing industry standards. Apple's leadership in ease-of-use and multimedia solutions will be married to NeXT's strengths in development software and operating environments for both the enterprise and Internet markets.

NeXT's object oriented software development products will contribute to Apple's goal of creating a differentiated and profitable software business, with a wide range of products for enterprise, business, education, and home markets.

For further details, check: **`http://www.apple.com`**, **`http://www.be.com`** and **`http://www.next.com`**.

Contact: Apple, Tel: (0181) 569 1199.

Subscribe today and get 2 ISSUES FREE

Save time, save money, save disappointment when you take out a regular subscription to Electronics and Beyond.

Two free issues when you subscribe by Direct Debit or Continuous Credit Card – saving you £6.12!

Britain's favourite magazine for the electronics enthusiast

Delivery to your door and there are no carriage charges.

SAVE MONEY – it's cheaper than buying individual copies.

SUBSCRIBER'S OFFERS with super savings on selected products!

PLUS News, Reviews, Reader's Letters, Competitions and lots more besides!

SUBSCRIPTION FORM
ELECTRONICS and Beyond

HOW TO ORDER

Simply fill in the details and send your completed subscription form, together with your payment to: ***Electronics and Beyond* Subscriptions Maplin Electronics PLC, P.O. Box 777, Rayleigh, Essex SS6 8LU.**

You can pay by cheque or postal order (payable to Maplin Electronics) or take advantage of our offer of two free issues when you subscribe to *Electronics and Beyond* using the payment by Credit Card or Direct Debit option. You'll have two issues free of charge with obsolutely no obligation to continue. If after receiving your two free issues you do not wish to continue, just let us know at least one month before your third issue is due and we will cancel your subscription. Please note that the Direct Debit payment option is only open to customers with bank accounts in the UK (including Channel Islands, Isle of Man and Northern Ireland).

Subscription Hotlines
UK (01702) 554155 Ext. 311
Overseas +44 1702 554144 Ext. 326
South Africa +27 21 8515124
Full details available on request

☐ Yes, I'd like to subscribe to *Electronics and Beyond*. Please start my subscription with the next issue.

☐ I am an existing subscriber, please extend my subscription.

Please tick the subscription you require.

6 months
- ☐ UK £11.88
- ☐ South Africa R114,00
- ☐ Eire, Europe Airmail and Surface Mail outside Europe £17.00 (or 40 IRCs)
- ☐ Airmail outside Europe £22.00 (or 50 IRCs)

1 year
- ☐ UK £23.76
- ☐ South Africa R215,00
- ☐ Eire, Europe Airmail and Surface Mail outside Europe £34.00 (or 80 IRCs)
- ☐ Airmail outside Europe £44.00 (or 102 IRCs)

DELIVERY DETAILS

Mr/Mrs/Ms

Address

Postcode

Daytime telephone number

PAYMENT BY CHEQUE

☐ I wish to pay by cheque made payable to **Maplin Electronics.**

Subscribe to *Electronics and Beyond* by Direct Debit or Credit Card and receive your first two issues absolutely *free

PAYMENT BY CREDIT CARD

☐ I wish to pay by Credit Card. Please debit my account.

I wish to pay by: ☐ MasterCard ☐ Visa ☐ American Express

Card Number Expiry Date /

Signature Date

PAYMENT BY DIRECT DEBIT UK only

☐ I wish to pay by Direct Debit mandate in favour of Maplin Electronics PLC.

DIRECT Debit

Please fill in the whole section.

1. Name and full postal address of your bank or building society.

Bank Name

Branch Address

Postcode

2. Name of account holder(s)

3. Bank sort code

4. Account number

5. Instructions to your bank or building society: Please pay Maplin Electronics PLC. direct debits from the account detailed on this instruction subject to the safeguards assured by the Direct Debit Guarantee.

Signature Date

*Offer of two free issues is open to residents with UK addresses only. This offer is not available to those already paying by Direct Debit or Continuous Credit Card, or those who have stopped payment by either method within the last year. Instructions cannot be accepted to charge Direct Debit to a Deposit or Savings Account.

Did you miss an issue?

ELECTRONICS and Beyond Back Issues

If you've ever wanted to lay your hands on an elusive issue of *Electronics and Beyond*, then we can help! Many editions are still available as back issues. Copies can be obtained from Maplin Stores countrywide; by Mail Order using the Order Coupon below or by calling the Telephone Sales Hotline on (01702) 554000. Where issues are out of print, details of projects that are still current can be found in Maplin Projects Books and Best of Maplin Projects Books. Call Customer Services on (01702) 554002 for details.

PROJECTS
Remote Control Extender
Multifunction Car Courtesy Light
Metal Detector

FEATURES
The Life and Times of Tesla
Surge Protectors
CAA – Air Traffic Control

REVIEW
Motorola Mini-phone

EDUCATIONAL SUPPLEMENT
Stripboard Projects for Education

Issue 110
Order As XD10L
£2.25

Issue 109
Order As XD09K
£2.25

PROJECTS
Colour Test Pattern Generator
On Guard Loop Alarm

FEATURES
EURECA
Digital Audio Broadcasting
Synchronous Network
Architecture and Internetworks

REVIEW
Optoelectronics Xplorer

EDUCATIONAL SUPPLEMENT
Mini-Circuits for Education

PROJECTS
Audio/Video Modulator
Signal Activated Amplifier

FEATURES
The Daresbury Synchrotron
Low Cost Isolated Mains
Control Interface
Radio Cracker

REVIEW
Apple Notepad

EDUCATIONAL SUPPLEMENT
Mini-Circuits for Education

Issue 108
Order As XD08J
£2.25

Issue 107
Order As XD07H
£2.25

PROJECTS
Active SCART Splitter
150W Power Amplifier
Remote Controller for Lights
IR Remote Controlled Car Alarm

FEATURES
Natural History Museum
The Early Oscilloscopes
Interview with Clive Sinclair
Flat Screen Developments

REVIEW
Stereo Mixer

PROJECTS
Voltage Regulator Kits
Superscan MkII
Active Transformer DI Box
Train Sound Effects Generator

FEATURES
The Future of GPS
Infrared Radio Observatory
The History of Maplin
A Century of Magnetic Materials
Network Computers

REVIEWS
Computer Clock
Domineye – The TV Watchdog

Issue 106
Order As XD06G
£2.25

Don't miss a single issue of Britain's Best Magazine for Electronics.

MAPLIN ORDER COUPON

Maplin Electronics PLC., P.O. Box 777, Rayleigh, Essex SS6 8LU.

Please write in block capital letters. If not using 1997 Maplin MPS Catalogue, enter date of catalogue ____
Enter catalogue page number where item appears. If not in catalogue, write MAG for magazine or SO for special offers.

DESCRIPTION	PAGE	ORDER CODE	QUANTITY	PRICE EACH	TOTAL ex VAT	TOTAL inc VAT

☐ **Export Order.** Customers living overseas, including Channel Isles and Eire, please deduct VAT where applicable and tick box. See Maplin Catalogue for details of overseas Carriage Charges.

Office Use Only			
DOR	CQ	CA	PO
CNC			
CNM			

Sub total	
Add £2.95 Carriage Charge (Applies only on orders of £30.00 or less. Orders over £30.00 and all orders by MPS Account holding customers are exempt). Carriage Charge does not apply on UK Magazine only orders.	
Deduct value of Credit note, Gift Token or Discount Voucher (enclose the numbered Credit note, Gift Token or Discount Voucher with your order).	
Total	

☐ Tick box if you do not wish to receive direct mail promotion of services or products from other reputable companies.

Form ME111 Issue 1

DELIVERY DETAILS

Customer number
Mr/Mrs/Ms
Address
Postcode
Daytime telephone number

Note: It is most important that you include your postcode.

PAYMENT

☐ I wish to pay by cheque made payable to **Maplin Electronics.**
☐ I wish to pay by Credit Card. Please debit my account.
I wish to pay by: ☐ MasterCard ☐ Visa ☐ American Express
Card Number Expiry Date ___/___

Note: Credit Card orders will be despatched only if the address above is the cardholder' address.

I authorise you to debit my Credit Card account for the cost of goods despatched.

Signature Date

Enquiries 01702 554002
Overseas Customers +44 1702 554000 Ext. 326/327/351

Telephone Sales 01702 554000

Phone before **5pm** *for same day despatch*

In any correspondence, please quote your customer number (if known).

PCB's in Minutes from LaserPrint*

8½" x 11" Sheets 100% MBG

* Or Photocopier Use household iron to apply.

PnP BLUE

For High Precision Professional PCB layouts

1. LaserPrint
2. Iron-On
3. Peel-Off
4. Etch

An Extra Layer of Resist for Super Fine Traces

COMPLETE ETCHING KITS AND SUPPLIES

Available from **£40**

5 SHEETS PnP .... £12.50 (exc. VAT)
Order direct from Maplin. Order As AB15R
Maplin Telephone Sales: (01702) 554000

Press-n-Peel Etching Supplies Ltd.
18 Stapledon Road, Orton Southgate, Peterborough PE2 6TD

Tel: (01733) 233043 Fax: (01733) 231096

Thinking Of Building Your Own Loudspeakers?

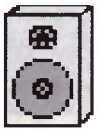

But struggling with all that theory & arithmetic? Help is at hand – ***Speaker Design*** is a CAD package for PC Windows that takes the pain out of all those sums. Calculate box responses, cabinet sizes & crossovers for speakers for the home, car or stage, quickly & easily.

Incorporates *Speaker Parameters* - calculates box size & tuning from Thiele/Small data. *Drivers Library* - a database of popular high quality drivers for you to choose from. *Crossovers Designer* - provides circuit diagrams from simple data. *Cabinet Maker* - produces the most ideal panel ratios to avoid standing waves, etc., & generates a panel cutting plan. Supplied on 3 HD disks for only **£28.95**. For more details & an order form write to:

Three Crowns Publishing
PO Box 5773, Laindon, Essex SS15 5FJ tel: 0410 225257

or send an SASE & floppy disk for the free help files & some example screen images.

Technical Information Services

Suppliers of all Service/Fault/Technical Books
76 Church St, Larkhall, Lanarks, ML9 1HE
N.B.: There is a £2.50 Post/Handling Charge on all orders
Send an SAE For Your *Free* Quote & Catalogue

We have the world's Largest Selection of

SERVICE MANUALS

VCR CIRCUITS £8.00 CTV CIRCUITS £6.00
HELPING YOU TO FIGHT RISING COSTS
----oOo----
CTV CIRCUIT COLLECTIONS
Imagine almost every Ferg' CTV circuit ever released from 1980's till the present for £45.00, or Bush for £22, Hitachi £45, Mitsubishi £38, Panasonic £30...etc...
Call for full list & prices of all 27 collections

TOP SELLING BOOKS

PRACT' VCR or TV REPAIR £16.95 each (or £30 for Both)	
MICROWAVES: ENERGY & OVENS	£12.95
Data Reference Guide(Chassis/Make/Model X-Ref')	£9.95
EURO' SCRAMB' SYS' (New 5th Edn.)	£34.00
Buying,Selling & Servicing Used CTV/VCR/CD	£9.95 each
IC DATA BOOKS - Various Titles, Call for List	£12.95 each

We have 100's of Titles, send SAE for Full List

SERVICE MANUAL LIBRARY

BUY *ANY* MANUAL FOR £10.00
OR SWAP AT £5.00 EACH (plus £2.50 p+p)
Initial Joining Fee £69.95 (£20/annum, thereafter)
Hundreds of people, both Amature & Professional, have already discovered exactly how efficient and cost-saving this library is, even if you only use a handful of manuals each year.

VISA ---oOo--- Access

NEW RELEASES:

3.5" Disk Drives (Installation & Circs):	£9.50
Data Ref' Guide on 3.5" Disk:	£5.00

!DESIGNER COLLECTIONS!

AMATURE: 10 Service Manuals (as needed), Data Ref', Pract' TV & VCR Repairs, Radio Repairs, Thorn Serv' Set, any 3 CTV circ' collections. *Now £180.00 ~~£199.00~~*

PROFESSIONAL: 20 Service Manuals (as needed), Data Ref', Pract' CTV & VCR Repairs, Microwave:E&O, Radio Repairs, Buy, Sell, Serv' Set, Thorn Serv' Set, any 5 CTV circ' collections. *Now £345.00 ~~£370.00~~*

MANUALS: 20 Service Manuals (as needed), and Data Ref' Guide. *Now £185.00 ~~£200.00~~*

Phone our HOTLINES on:
01698 883334/884585
or FAX 01698 884825

Magnetic RESONANCE IMAGING

by Douglas Clarkson

The era of Magnetic Resonance Imaging is very much in its infancy compared to one hundred years of X-ray imaging. The first MRI systems for clinical use appeared during the 1980s. Already, MRI is very much a standard tool for Radiological Investigation and continues to displace various investigations traditionally using X-rays. The UK was also very much at the forefront of developing MRI for medical applications. The first medical images were made at the Medical Physics Department of the University of Aberdeen. Also, licensed technology of spin echo techniques and data recovery continues to earn valuable revenues.

While in this regard, MRI is gaining ground due to better diagnostic quality, there is also the factor that MRI does not involve the use of Ionising Radiation and hence, is inherently safer. While the occasional X-ray carries negligible risk, patients who receive numerous X-rays are at a relatively higher risk, although it is always assumed in such calculations that the patient is at more risk if such investigative procedures are not undertaken.

What's In a Name?

Among the core of initial developers, the technology was always knows as Nuclear Magnetic Resonance – NMR. This is, after all, an accurate description of the parameter used in this imaging technology. The term to describe the imaging methodology was, however, altered to make it a 'nuclear'-free expression – more acceptable to the general public.

Standard Imaging Context

Techniques of imaging using X-rays relate to effects of the relative absorption of X-rays – either in plain X-ray or in computed tomography (CT) scans. Unless use is made of so-called contrast material which will typically provide for a higher absorption effect, scan images will be limited by the variation in relative absorption of X-rays. While good contrast is provided by bone, soft tissue will tend to have a relatively uniform level of absorption. This tends to make it difficult to differentiate details within such tissues.

The parameters which influence the behaviour of atoms in tissues having nuclear magnetic resonance properties vary much more considerably – making the technique highly sensitive to the local tissue environment and hence adding considerable clinical usefulness to such imaging technology. Also, the parameters of MRI scans can be altered to select specific types of tissue. It is this adaptability which has led to its rapid uptake as a scanning modality.

Into the Nucleus

The nucleus of an atom is very much a system in balance. Protons and neutrons establish a stable 'living environment' which gives constancy to our physical world. Left to themselves, isolated neutrons would decay with a lifetime of some 13 minutes. Fortunately, protons and nuclei in general are much more stable.

Both protons and neutrons possess a tiny magnetic dipole magnet – behaving in many respects like a small bar magnet. While some simple rules exist to predict nuclear spin values for some types of proton/neutron distributions, there is not a universal rule that can be applied to predict the spin of all complex nuclei.

In simple terms, if a nucleus has equal even numbers of neutrons and protons, then it will possess no spin. Nuclei with equal odd numbers of protons and neutrons will have spin quantum numbers that are integers. Examples of the latter would include Deuterium

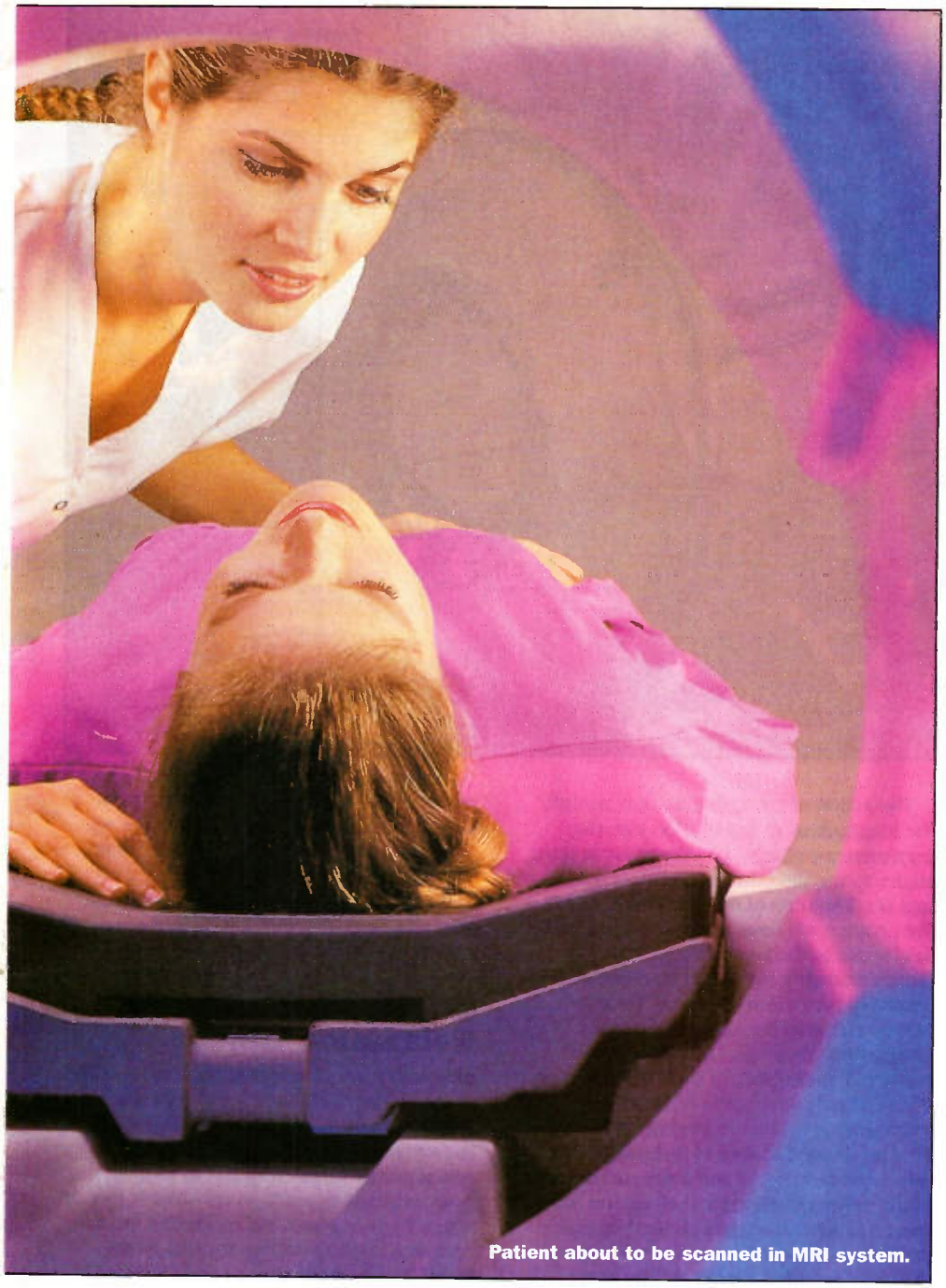

Patient about to be scanned in MRI system.

COURTESY: ELSCINT.

(one proton, one neutron), Nitrogen-14 (7 protons, 7 neutrons) and Boron-10 (5 proton, 5 neutrons).

All other nuclei will possess spin in multiples of half units and ranging from ½ to 7 units of spin. The most important nucleus for medical imaging applications, that of Hydrogen, (spin ½) is included in this set, although others include Sodium-23 (spin 3/2), Fluorine-19 (spin ½) and Oxygen-17 (spin 5/2). Table 1 indicates the possible quantum energy levels for a series of spin values ½ to 5/2.

Alignment in Magnetic Field

When an external magnetic field acts on a material which exhibits nuclear magnetic dipoles such as Hydrogen, the dipoles will tend to select to be in one of two spin states with the lower spin state in the direction of the field and the higher energy state in the anti-parallel direction. There will be a slight preference for spin states in the lower energy level to be selected. This gives the material with an inherent magnetisation, *Mo*.

For a field strength of one Tesla, this represents a net alignment of only a few dipoles per million nuclei. This net magnetisation will typically build up over a time period of between five and ten seconds from the establishment of the magnetic field. This state of net magnetisation is a dynamic one, with dipoles switching between states as interactions take place from highly local magnetic field perturbations caused by surrounding macromolecules.

In the presence of an external magnetic field, B_O, a series of energy levels, Em, are considered to be established via the Zeeman effect, where:

$$(1)\ E_m = -m \cdot t \cdot h' \cdot B_O$$

Where m is the quantum state number, t is the so called gyromagnetic ratio for a specific nucleus and h' is Planck's constant divided by $2n$.

The difference in energy between levels is therefore given by:

$$(2)\ dE = t \cdot h' \cdot B_O$$

According to Planck's law, the energy of a photon of frequency f is given by:

$$(3)\ dE = h \cdot f$$

Where h is Planck's constant.

Combining expressions (2) and (3),

$$(4)\ \omega = t \cdot Bo$$

Where ω is the angular frequency in radians per second and is termed the Lamor frequency.

Figure 1 indicates the observed resonant frequency in Hz for Hydrogen as a function of external magnetic field value. At one Tesla, hydrogen nuclei precess at a frequency of 42·6MHz.

Models and Explanations of Nuclear Spin

There is an analogy here with a compass needle oscillating in a magnetic field. This is an example of a magnetic dipole having a degree of freedom in two dimensions.

Spin Quantum Number (I)	Spin Quantum States	Total Number of States
½	$-\frac{1}{2}, +\frac{1}{2}$	2
1	−1, 0, +1	3
3/2	$-\frac{3}{2}, -\frac{1}{2}, +\frac{1}{2}, +\frac{3}{2}$	4

Table 1. Details of spin states for I values of ½, 1 and 3/2

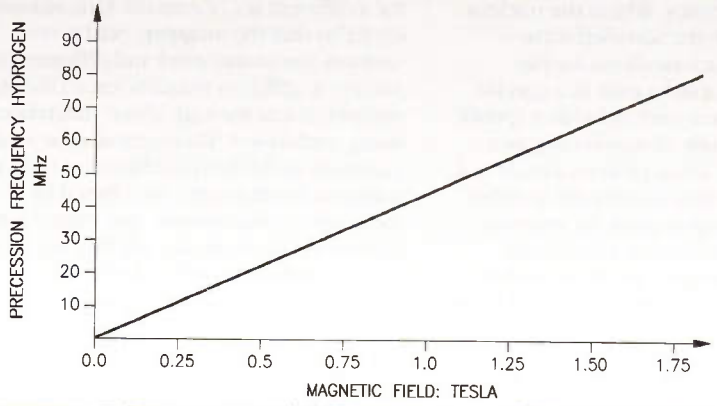

Figure 1. Precessional frequency of Hydrogen Nuclei as a function of magnetic field value.

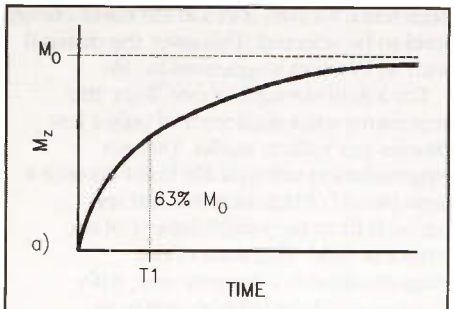

Figure 2a. Decay of transverse magnetisation due to dephasing effects.

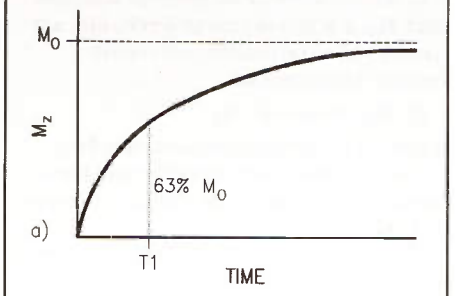

Figure 2b. T1 recovery of magnetisation field after flip of magnetisation into transverse plane.

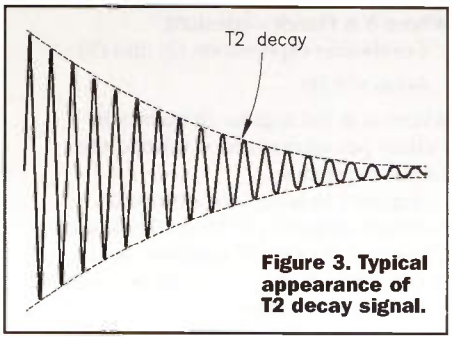

Figure 3. Typical appearance of T2 decay signal.

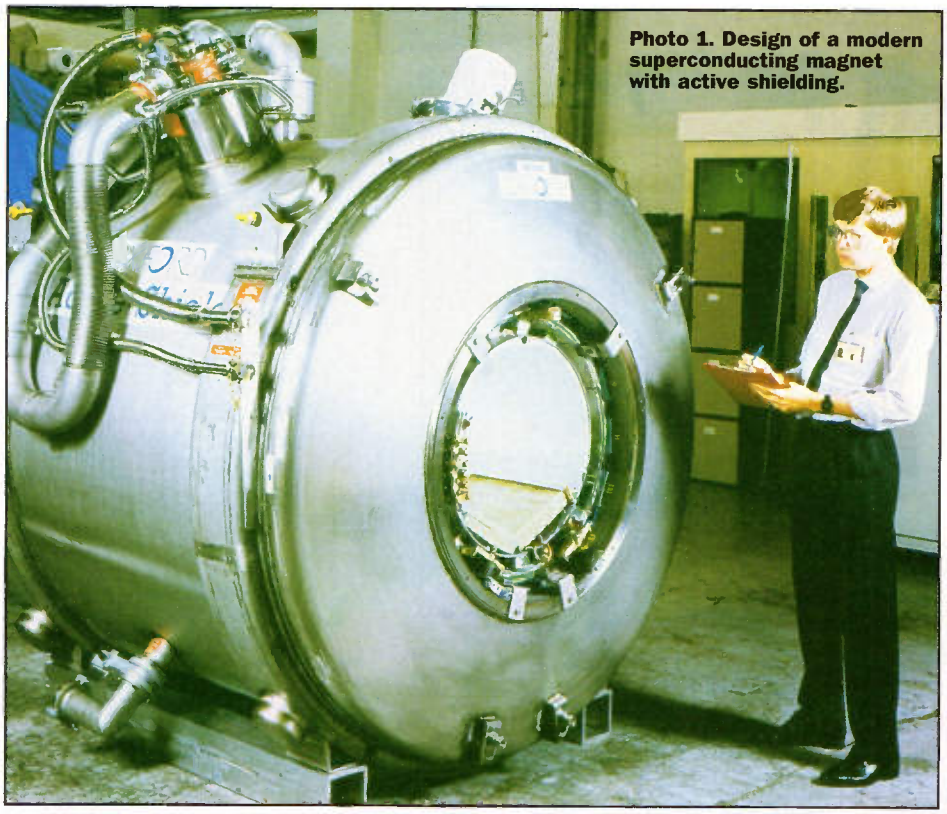

Photo 1. Design of a modern superconducting magnet with active shielding.

Courtesy: Oxford Magnets.

If the dipole is able to act about a three-dimensional pivot, it would still oscillate within a two-dimensional plane. If the dipole is spun so it becomes a small spinning top, then it will precess as it preserves its angular momentum about the vertical axis. The manifestation of nuclear magnetism is, therefore, very much linked to its association with the spin angular momentum of the nucleus. Since the net magnetisation produced by the externally applied magnetic field is millions of times smaller than that of the external field, it is exceptionally difficult to measure.

An alternative approach to describing the spin states is to use descriptions relating to quantum mechanics. Where the nucleus is being described, the so-called wave equation of the nucleus allows for the nuclear magnetic spin to exist in a specific wave function, where each spin has a specific probability amplitude of manifesting as a physical property. Thus, protons should not be thought of existing as uniquely in either state. In the Hydrogen atom, for example, this is equivalent to having a wave with probability amplitudes a and b that either spin function will manifest. It is thought that the absorption of a photon at the Lamor frequency acts to shift the relative values of probability of a and b but with preserving the sum of the squares of their amplitude.

The action of such photons acts to shift the longitudinal magnetisation into the transverse x-y plane – i.e., the plane at right angles to the direction of the main field. In a small volume of tissue called a 'voxel', the protons will have a precessing magnetic field signal at the Lamor frequency. This rapidly changing signal can be detected by a suitably tuned detection coil. Gradually, however, due to interaction of transfer of energy from local macromolecules, the balance of probability of the wave equation of the protons changes – favouring the lower energy – (parallel) energy state. This is followed in turn by a decay of the transverse field signal and a re-establishment of the tissue magnetisation along the main static field direction, as indicated in Figure 2a. The so-called T1 recovery is defined as the delay required for 63% of the tissue magnetisation to recover along the B_O direction – see Figure 2b. In the human body, the T1 value for fat will be between 150 and 250ms and for Cerebral Spinal Fluid, between 2 and 3 seconds.

T2 Relaxation

Similarly, the initial magnetisation within voxels in the x-y plane tends to decay – but for a different set of reasons. One reason could be that the magnetic field is not uniform across the voxel and different parts precess at different frequencies, so the signal strength is lost through phase differences being established. There can also be local variations in the field attributed to the local magnetic environment established by molecules or macromolecules. Magnetisation is also lost, since dipoles are flipping back to the initial spin parallel direction.

The T2 (or spin-spin) relaxation time is identified as the time taken for the transverse magnetisation to decrease to 37% of its original value due to irreversible processes. The mechanisms determining T2 values are inherently different, however, from those determining the value of T1. T2 values are usually between 10 and 20% shorter than T1 relaxation values. Also, T2 values tend to be independent of the value of external magnetic field. Figure 3 indicates the typical appearance of T2 decay signals.

Origins of Range of Relaxation Times

Although nuclei are incredibly small – of the order of 10^{-14}m in diameter, the T1 and T2 relaxation times are primarily influenced by the surrounding larger molecules, which typically range in size from 10^{-8} to 10^{-6}m in size.

An extreme example to consider is that of water. In pure water, the molecules are fairly energetic – with energies relating to the kinetic/thermal energies of each molecule. These levels of energy are higher than the relatively low energy difference of a proton changing from an anti-parallel spin state to a parallel spin state. This determines that T1 values in distilled water are around 3 seconds.

Also, in terms of T2 decay caused by dephasing of spin due to localised magnetic field variations, the water molecules are so fast-moving that local fluctuations are very rapid and they do not significantly influence the T2 term. In fact, the T2 term arises mainly because of the relaxation of spins from the higher to lower energy states.

Distilled water with a weak concentration of macromolecules (such as extracellular edema) will demonstrate lower values of T1 and T2. Water molecules in higher energy spin states attached to the large macromolecules are more able to relax to the lower energy state. Through the mechanism of rapid exchange of water molecules from the attached layer to the free water molecules, there is a mechanism to generally speed the T1 relaxation term.

Also, in terms of T2 relaxation, the presence of the large macromolecules provides a

more effective means of introducing locally varying magnetic fields that will act to dephase the spinning dipoles of transverse magnetisation. Thus, T2 is also shorter.

Where the concentration of macromolecules is higher, there are more opportunities of T1 relaxation and so T1 is shorter. With additional dephasing due to higher concentrations of macro molecules, T2 values are also even shorter.

In a solid tissue lattice, however, it becomes more difficult for hydrogen to relax to lower spin states, since there is reduced mobility between molecules to effect exchange of energy. The opportunities for dephasing, however, are good, due to the interaction of molecules on a highly localised basis. Thus, in solids, values of T1 will continue to be high and that of T2 to be short.

In some ways, T1 relaxation can be considered as a signal recovery mechanism and T2 as a decay process. The mechanisms of image generation, however, have grown very complex and with the ability to emphasise either effect or combinations of both.

NMR: Basic Design of System

In most systems the magnet used will be of a superconducting type using liquid Helium. Modern designs tend to have advanced thermal efficiency systems to minimise the top up of expensive Helium. Field strengths vary from 0·5 to 2 Tesla and with research applications using fields as high as 4 Tesla. A key parameter in the design of such magnets is the degree of homogeneity or uniformity in the field strength across the designated imaging region.

Modern MRI systems have a uniformity within a sphere typically of 40cm of one part in a million. Systems of older design would typically have a uniformity of around six parts in a million. The very high uniformity of the field of the modern scanner makes such systems more susceptible to weak magnetic fields in the environment. Such scanners cannot, for example, be situated too close to modern traffic on account of the magnetic fields associated with motor vehicles.

Photo 1 indicates the design of a modern superconducting magnet with active shielding produced by Oxford Magnets.

Figure 4. Axis convention and representation of gradient fields.

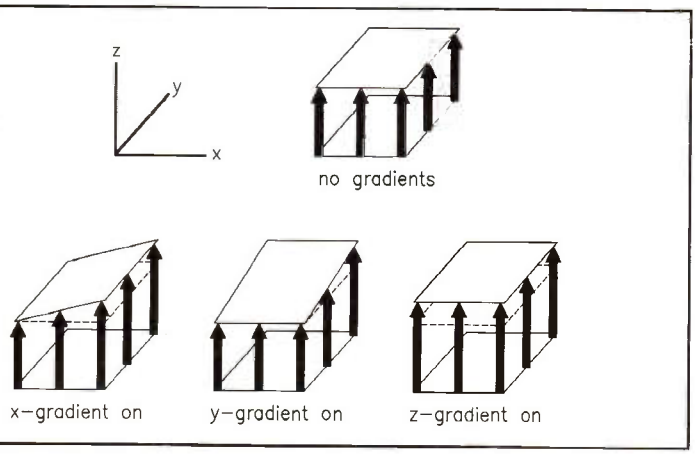

Gradient Coils

A gradient coil of the x-axis will add a component of magnetic field in the Z direction but with component varying with x co-ordinate. Similarly, a y-axis component will add a component of field in the z-axis and with component varying with y co-ordinate. The definition of axes directions and these effects are indicated in Figure 4. The size of these gradient fields, however, is much smaller than that of the main axial field.

A typical maximum field strength gradient would be around 15mT/m. Across a plane in the scanner, a gradient field could, for example, establish a gradient from –1mT to +1mT over a distance of 1m. During image sampling, these gradient coils are rapidly switched and the resulting data processed to form the final MRI image.

Radio Frequency (RF) Coils

The RF coils serve both to change the spin state of nuclei and detect the magnetisation characteristics of voxels of tissue. The transmit coil is a large coil which can be built into the sides of the magnet bore. This is driven by a fast responding radio frequency amplifier.

In terms of safety of MRI systems, one consideration is the safe maximum level of RF power that these systems can deliver to tissue without onset of thermal effects. This factor, however, has been extensively investigated and systems designed to provide a high level of inherent safety. Power levels of RF excitation are typically low – around a few mW per kg of tissue. Some modern high performance scanners, however, are able to deliver powers close to an upper safety limit of 2W per kg.

While one large coil can provide the energising pulse, a series of receiver coils can be used to optimise the process of detection of MRI signals. Thus, a general-purpose body imaging coil can be used in association with specific types for head, cervical spine, lumbar spine, knees and other joints.

Generating Images

The understanding of how images are obtained using MRI technology is one of the most difficult concepts to grasp in the whole of medical technology. This difficulty is more to do with the relative complexity of the whole procedure rather than the inherent difficulty of any step in the process.

Assuming, for example, it is required to image in a plane at right angles to the Z axis – the axis conventionally taken as running head to toe along the patient. This would image a conventional 'slice' through the body and be selected by applying a specific value of signal to the z-axis gradient coil. A narrow band RF pulse would then be applied that would move the magnetisation into the transverse plane for the 'slice' of tissue that this corresponded to, as indicated in Figure 5a.

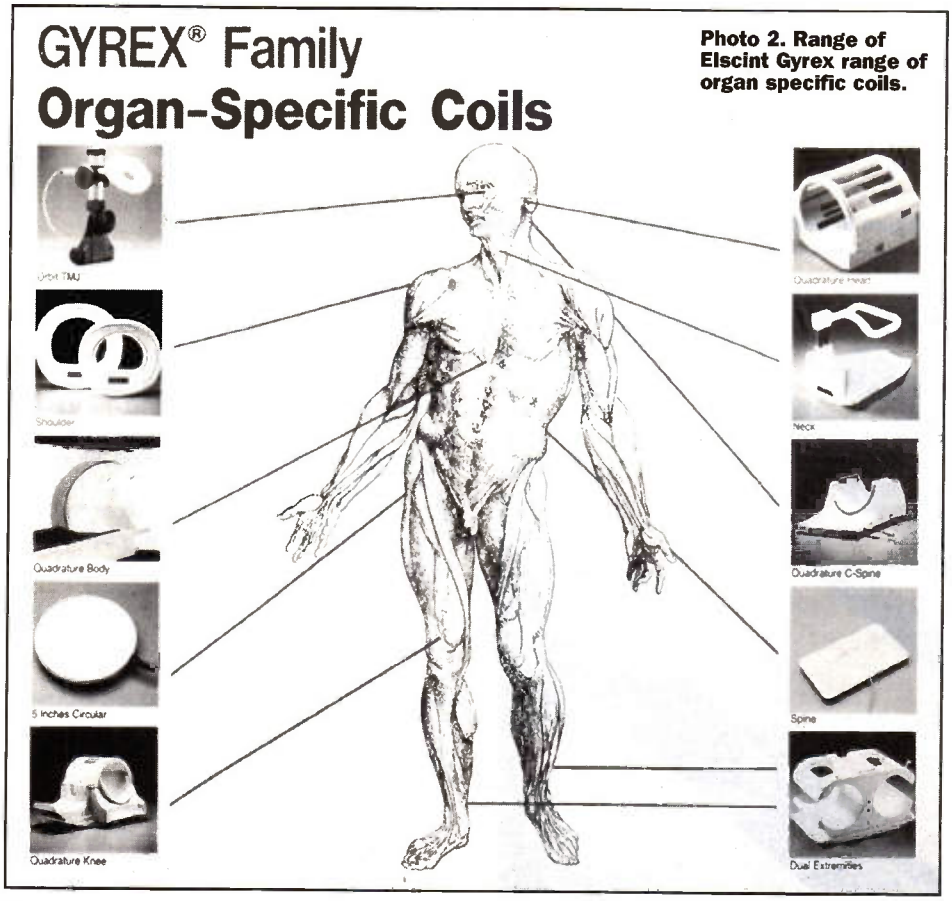

Photo 2. Range of Elscint Gyrex range of organ specific coils.

COURTESY: ELSCINT.

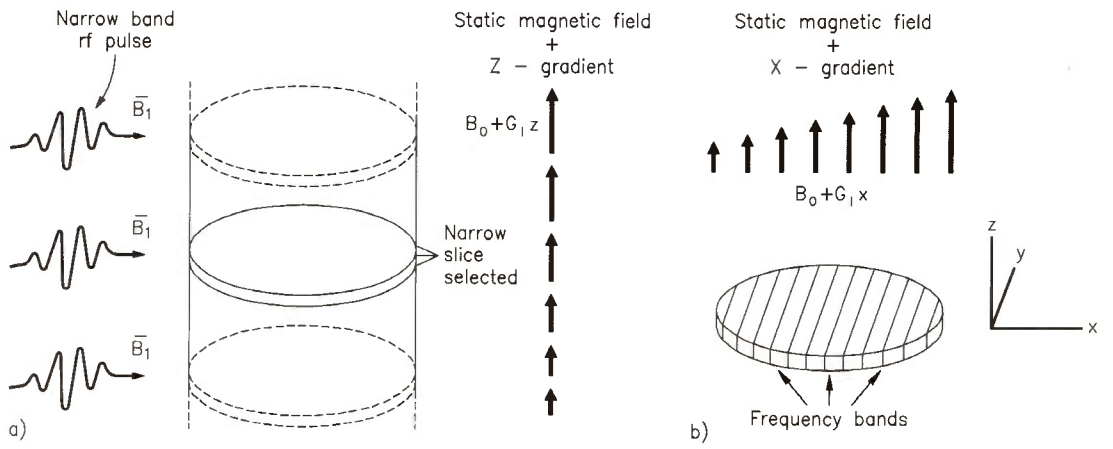

Figure 5a. Selection of 'slice' along z axis due to z-gradient field.

Figure 5b. Establishment of frequency bands in slice due to addition of x gradient field.

For a static field of 1 Tesla, a change in 1mT of gradient field will result in a change of 42·6kHz from the nominal excitation frequency of 42·6MHz. There is also the aspect of the bandwidth of the signal influencing the width of tissue that is excited. There is a balance between exciting a thickness of tissue that is too small and gives insufficient signal to exciting one that is too thick and masks anatomical detail. For a gradient coil of specification 10mT/m, with the bandwidth equivalent to a 5mm slice would be 2,130Hz.

Thus, in the specification of the system, there is high precision required in the generation of the magnetic field and in the determination of the frequency and associated bandwidth of the RF generator. In many ways, the scanning technology is in effect a scanning by frequency space.

If a frequency encoding or read gradient is established, for example, in the x-direction, as indicated in Figure 5b, then each band within the gradient can be considered to oscillate at slightly different frequencies within each band. In this regard the two gradient coils are acting together. The z-axis gradient is selecting a slice and the x-axis gradient is moving along the slice. The captured signal from the selected series of voxels is processed by Fourier transform into a frequency distribution where the horizontal axis carries information relating to the x-co-ordinate. At this stage, however, the data is still not resolved as points along each band. Also, each voxel can be considered as possessing its unique level of MRI signal but which is unresolved. In this configuration, the RF signal is only exciting voxels within the selected geometry of the scan.

In order to resolve the components along the band, a so-called phase encoding gradient is added along the band. In this present configuration, this phase encoding gradient would be added by the y-axis set of gradient coils. This acts to change the relative contribution of elements by known phase change and allows the separate contribution of individual voxels in the band to be resolved after numerous patterns of phase encoding are established and corresponding signals for the slice obtained. The phase-encoding amplitude is varied from weak to strong type in order to resolve

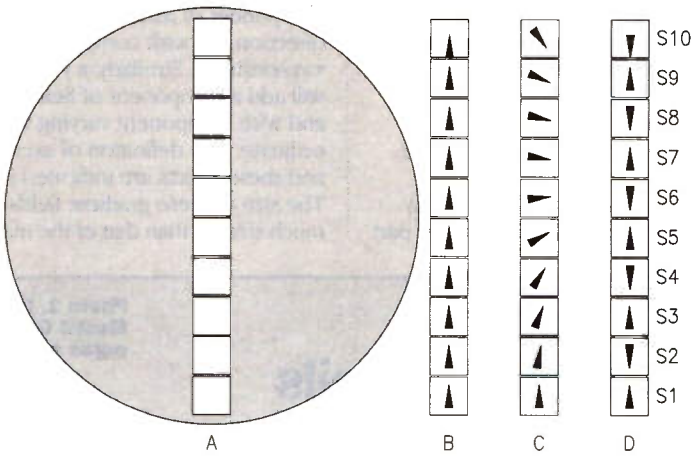

Figure 6. Representation of phase encoding of voxels.

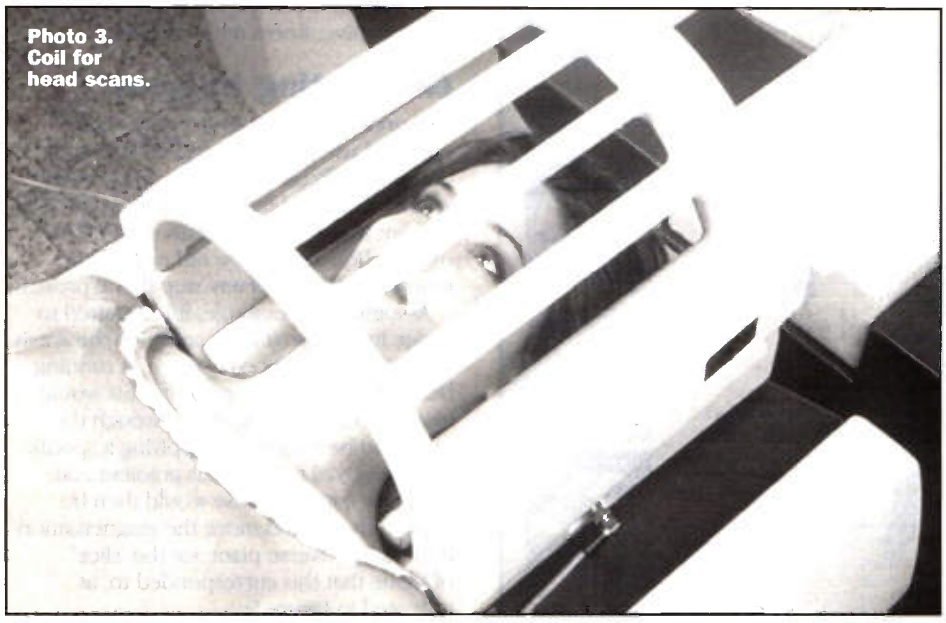

Photo 3. Coil for head scans.

COURTESY: ELSCINT.

the component amplitudes of individual voxels, as indicated in Figure 6. In the example, the series of spin signals, S1, S2, etc., are selectively changed in phase by the phase encoding gradient and the total signal from the sum of elements changes accordingly. Thus, data is deduced about each voxel's contribution in an indirect way. Typically in a scan procedure, 256 or 512 voxels will be resolved in this way by successive phase encoding processes.

Once sufficient patterns have been established and data read from the strip of voxels, then the contribution of individual voxels can be determined and resolved as discrete signals. Normally, slices are around 7mm thick, with more modern machines this tends towards 5mm slices. As thickness is further reduced, so imaging time increases and signal-to-noise ratios deteriorate. Where small field of view scans are undertaken, e.g., of a wrist, then imaging slices of 2mm thickness can be undertaken.

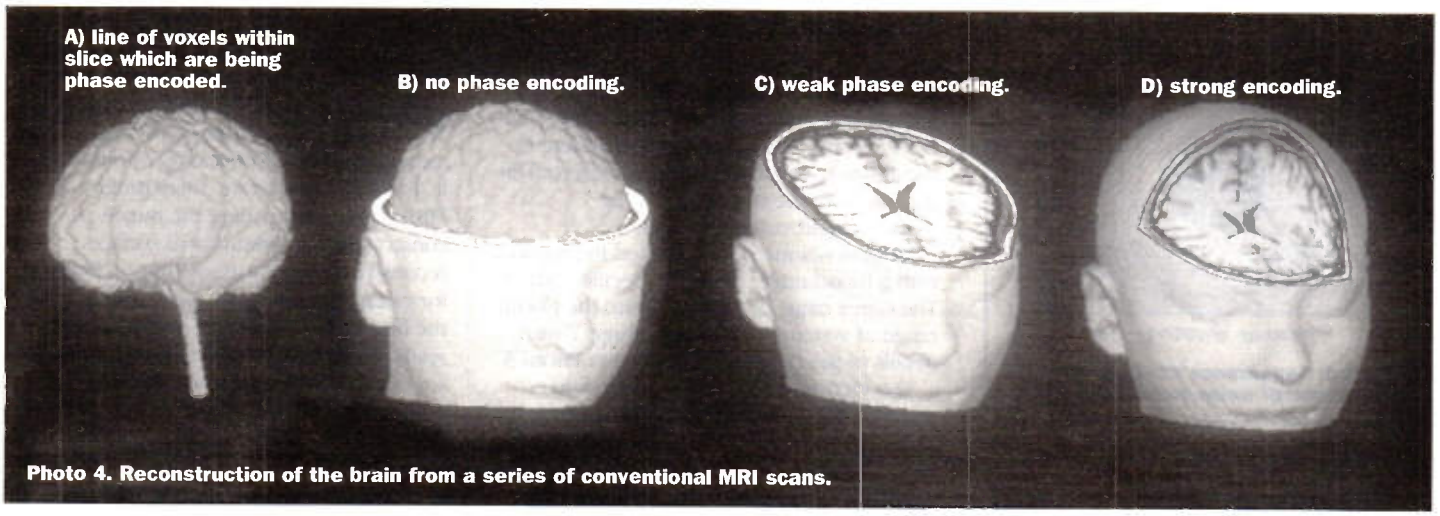

Photo 4. Reconstruction of the brain from a series of conventional MRI scans.

COURTESY: ELSCINT

Scan Procedures

A modern scanner can produce a typical scan in around 15 minutes, with this figure rising to as much as 45 minutes for older systems. A significant portion of each scan, however, is taken up with positioning the patient in a stable position in the scanner. Improved scan times are associated to some extent with the availability of much more in the way of computing power to processes all the streams of data which are collected during the scanning process. One of the ever present problems with MRI scanning is motion artifact, where the motion of the patient can lead to loss of definition of any anatomical feature.

Spin Echo Pulse Sequence

In practice, the most commonly used pulse sequence is that of spin-echo (SE). While the effects of transverse magnetisation can be measured after the 90° pulse, it is difficult to configure the scan system rapidly enough to access this data. Use is made of a 180° rephasing pulse a few milliseconds after the initial 90° pulse to rephase the transverse component of magnetisation which can be degraded due to field inhomogeneities in the voxel. This rephasing seeks to restore reversible components of magnetisation to allow the irreversible component, characterised by T2, to be measured.

The interaction of time between 90° pulses and the relative time at which data is read allows for selection of types of tissue. In the imaging of the brain, for example, the basic separate properties of brain and CSF can be emphasised in scans obtained. In Figure 7a, a short interval between 90° pulses of 600ms and reading data 20ms after 90° pulses ensures that the signal from the brain is greater than that of CSF. This is in fact dominated by the shorter T1 value of brain tissue and the fact that the data is captured shortly after 90° spin to the shorter T2 time of brain does not have a significant effect.

In Figure 7b, the time between 90° pulses is increased to 2,700ms and the data sampled 80ms after 90° spin. This ensures that the rapid T2 decay of brain makes the eventual contribution of CSF signal greater. For clarity, in Figures 7a and 7b, the scale of the T2 time axis is expanded by a factor of five.

Chemical Shift Effects

The chemical environment of Hydrogen can sometimes influence its nuclear spin properties in the presence of a magnetic field. In particular, if hydrogen is bonded to fat, it tends to be shielded by surrounding electron clouds. This approximates to a difference in resonant frequency of 3·5 parts per million and which equates to a difference of around 150Hz at 1 Tesla field strength. This difference in resonant frequency causes a separation distance wise in an image from a voxel containing contributions from both types of hydrogen. Typically, the displacement will be between 2 and 6 pixels wide.

Figure 8 indicates the appearance of chemical shift in a volume of water surrounded by fat.

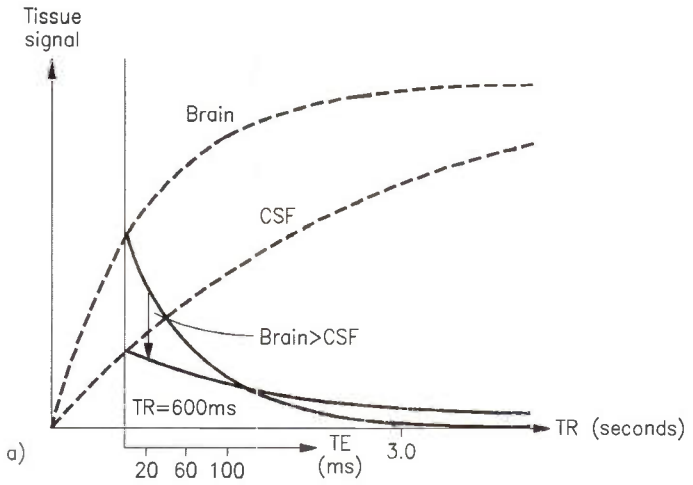

Figure 7a. Time between 90° pulse set to 600ms and with data read 20ms after 90° pulse for brain tissue and CSF. This ensures that signal from brain is emphasised.

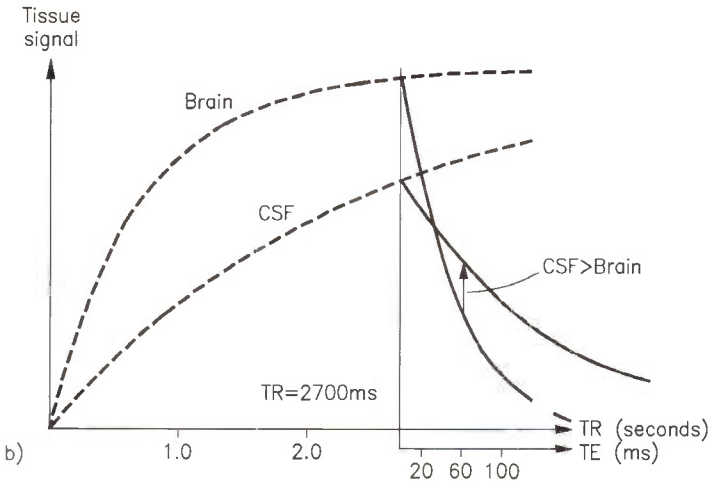

Figure 7b. Time between 90° pulse set to 2,700ms and with read time 80ms after 90° spin pulse. This ensures that signal from CSF is emphasised.

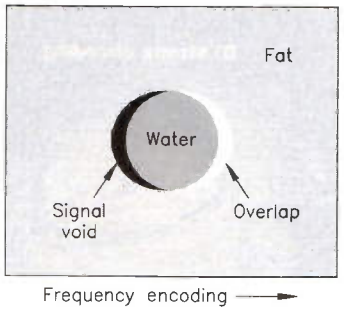

Figure 8. Appearance of chemical shift in a volume of water surrounded by fat.

Modern Systems

The model 2T Prestige Elscint scanner can undertake a wide range of clinical investigations and provide image resolution based on 512 × 512 arrays. A feature of such a system is the ability to implement efficient spectral fat suppression due to the high static magnetic field value of 2 Tesla.

Modern scanners are designed to function with a broad range of organ specific coils. The Gyrex range of coils used with the Elscint range of systems is shown in Photo 2 with details of the head coil indicated in Photo 3.

The increased speed of modern MRI scanners is due largely to availability of fast, modern computing facilities. The Privilege range of mid field strength Elscint scanners, for example, use a Silicon Graphics Onyx computer with a VTX graphics processor. This provides 256M-byte of internal memory for rapid processing of data in 1,024 × 1,024 arrays. Increasingly, MRI scans are providing the means to construct three dimensional surface reconstructions of various organs. Photo 4, for example, indicates a reconstruction of the brain from a series of conventional scans. Such reconstruction procedures are of value as a 'road map' during a range of types of surgery.

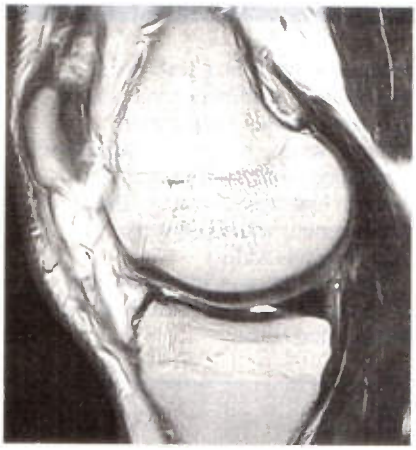

12 cm FOV 512² knee FSE

Spectral fat-suppressed T_1 of knee

Spectral fat-suppressed FSE of liver

High-resolution FSE with head/neck coil

2.3 mm T_1 SHORT of C-Spine

512² 16 cm FOV FSE of breast

High-resolution FSE with spine phased-array

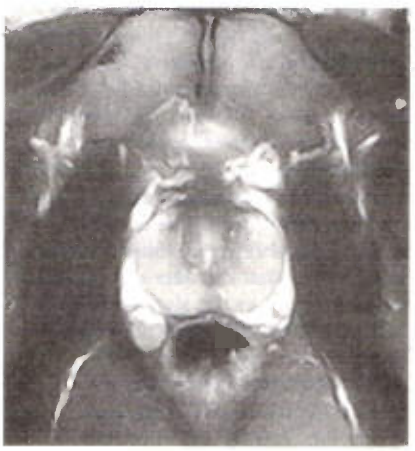

Spectral fat-suppressed prostate FSE

Photo 5. Series of scans taken using high performance Elscint 2T Prestige system.

COURTESY: ELSCINT

The series of scans of Photo 5 indicate the wide range of images which can routinely be produced using the high performance Elscint 2T system. The clarity of the images is due in part to high static field value and fat suppression algorithms. The high resolution possible is of especial importance in head scans. Photo 6 indicates slices through the head/neck indicating on the right image possible damage to the spinal cord.

An emerging field of application with MRI is that of functional MRI sensory stimulation, where changes in tissue environment in the brain (such as oxygen concentration) is detected as a function of sensory stimulation. Photo 7a demonstrates the high resolution possible with the Elscint 2T system, while Photo 7b indicates changes in cerebral activity following a range of sensory operations ranging from feeling the roughness of sandpaper to assessing the size of balls.

Work is also being undertaken into the effect of drugs such as cocaine on the central nervous system. It is hoped that this will lead to a greater understanding of the effects of such drugs on the brain and with possible insight into introducing effective mechanisms of detoxification.

Summary

The physics behind MRI imaging are certainly interesting and the understanding of the basic principles of such imaging is very challenging. The physics of MRI technology is now highly specialised and includes many refinements and enhancements to improve imaging speed and quality. This article, however, has addressed the key aspects of the subject. The establishment of a large customer base of such technology now ensures that significant R & D is committed to developing even more advanced systems for the benefit of all. ELECTRONICS

Points of Contact

MRI Sites on World Wide Web: `http://www.bme.jhu.edu/~mrmclass/mri_sites.html` This is a useful reference for over fifty sites primarily related to the field of MRI around the world, and includes an introduction to MRI at: `http://www.xray.ufl.edu/~rball/mritutor.html`, which can be downloaded as a 447k-byte Windows version.

Work on investigation of neurochemicals of cocaine users can be found at: `http://www.biophysics.mcw.edu/bri-people/li.html`.

Photo 6. MRI scans through head/neck indicating on right possible damage to spinal cord.

COURTESY: ELSCINT

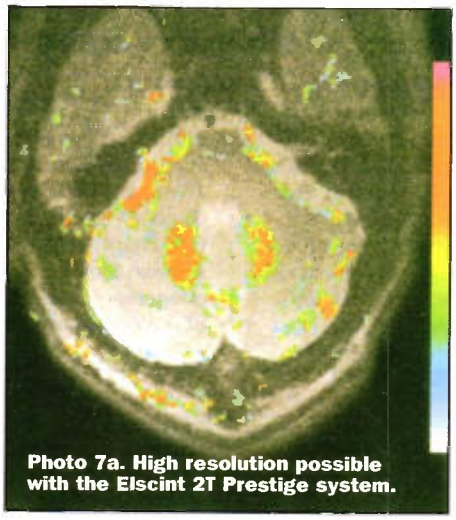

Photo 7a. High resolution possible with the Elscint 2T Prestige system.

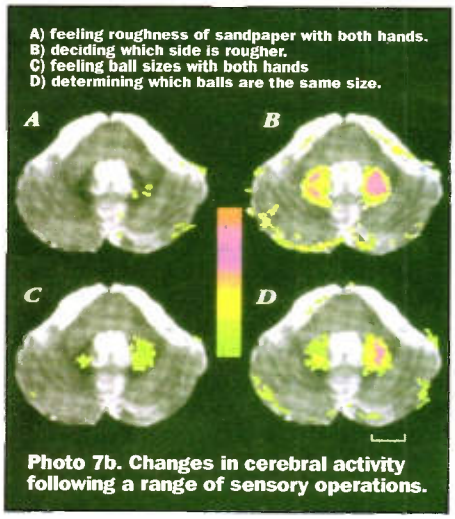

Photo 7b. Changes in cerebral activity following a range of sensory operations.

COURTESY: ELSCINT

NOW YOU CAN SEE THE COMPLETE RANGE OF MAPLIN GOODS ALL UNDER ONE ROOF.

Visit Maplin's biggest, brightest, best-ever store!

MONDO MAPLIN SUPERSTORE

01702 554000

MPS THE COMPLETE CATALOGUE FOR ELECTRONICS

VIRTUALLY EVERY CATALOGUE ITEM ON DISPLAY

HOURS OF BUSINESS
Monday to Saturday
from 9.00am to 5.30pm
(Opens at 9.30am on Friday)

3 REGENT STREET, LEEDS
TELEPHONE: (0113) 244 9200

PROJECT

Programmable CENTRONIC 24-LINE INPUT/OUTPUT CARD

PART 1

by Dr. Pei An

This article describes a general-purpose programmable I/O card for computers. Unlike other conventional I/O cards which are inserted into a PC's expansion slots, this card is connected externally to one of the Centronic ports (printer port). This has several advantages over the conventional cards. Firstly, It provides the simplest and universal way for customised I/O expansions; it can be used with IBM-compatible PCs as well as with other types of computers. Secondly, It allows notebook computers to be used for interfacing applications.

The card utilises an industry-standard programmable peripheral interface chip which provides 24 programmable I/O lines. These lines are organised into 4 groups which can be configured either as inputs or outputs under software control via the Centronic port. Figure 1 shows how the I/O card is connected to a PC computer. It also gives the pinout functions of the 26-way DIL expansion socket from which the external circuitry is connected.

The Works

The card consists of an 8255 peripheral programmable interface (PPI), which is the heart of the card, a 74LS241, a 74LS244, a 74LS365 tri-state buffer ICs and a 74LS02 NOR gate. The logic ICs allow the 8255 PPI to be interfaced to the I/O lines of the Centronic port. Before the works of the card is explained, the Centronic port and the 8255 PPI are described.

Introduction of the Centronic Port

The *Centronic port* of a PC, which is also referred to as the *printer port* or the *parallel port*, is an industrial standard port designed originally for interfacing with printers. A PC has at least one Centronic port installed. Two more ports may be added to the PC using extra I/O cards, and they have logical names – LPT1, LPT2 and LPT3.

The connectors on a computer and on a printer are different. The one on the computer is a 25-pin D-type female connector (see Figure 2a) and the latter is a 36-pin female Centronix-type connector (Figure 2b). The pins of the connectors and their functions are summarised in Figure 2. To connect the computer and the printer together, a printer lead is used (see Figure 3). Although the two connectors have different shapes, the functions of pins are the same.

The I/O lines in the Centronic port are organised into three groups, which are named the **DATA**, **CONTROL** and **STATUS** group, as illustrated in Figure 4.

DATA Group

It sends data from the PC to the printer. It has 8 latched lines (DB0 to DB7) and is controlled by an 8-bit I/O port of the CPU inside the PC.

CONTROL Group

It controls the operation of the printer. It contains 4 latched lines (–STROBE, –LF/CR, –SLIN and –INITIALIZE) which are directed from the PC to the printer. The group is controlled by an output port of the CPU. Note that the –STROBE, –LF/CR AND –SLIN lines are inverted and –INITIALIZE is not.

STATUS Group

This group is used by the PC to obtain current status of the printer. It contains 5 lines (–ERROR, SLCT, PE, –ACK and BUSY), which are directed from the printer to the computer. It is fed into an input port of the CPU. The BUSY line is inverted and the other 4 lines are not.

As mentioned above, the three groups are controlled by three I/O ports of the CPU inside the PC. The corresponding ports are named the DATA,

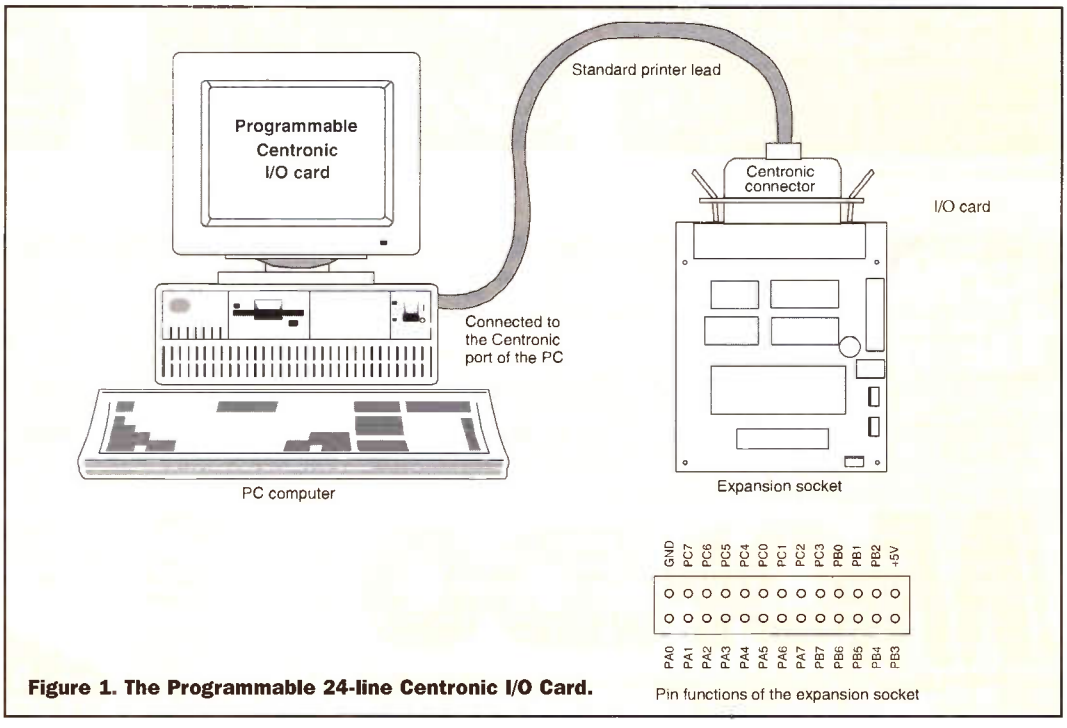

Figure 1. The Programmable 24-line Centronic I/O Card.

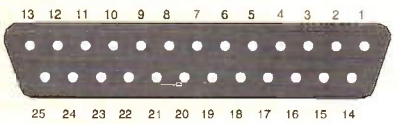

(a) Pin-out of the Centronic connector on PC computers - Viewed from the back of the pc
Connector type: 25 pin female D-type

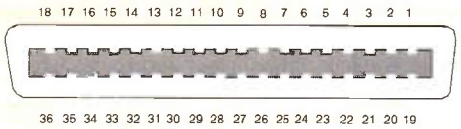

(b) Pin-out of the Centronic connector on printers - Viewed from the back of the printer
Connector type: 36 pin female Centronic-type

Figure 2. Pinout of the Centronic port connectors on computers and printers.

Pin functions of the Centronic port connectors

Connectors on computer	printes	Direction	Name	Explanation
1	1	C to P	STROBE	Strobe data
2	2	C to P	DB0	Data bit 0
3	3	C to P	DB1	Data bit 1
4	4	C to P	DB2	Data bit 2
5	5	C to P	DB3	Data bit 3
6	6	C to P	DB4	Data bit 4
7	7	C to P	DB5	Data bit 5
8	8	C to P	DB6	Data bit 6
9	9	C to P	DB7	Data bit 7
10	10		ACK	Indicating data received
11	11	P to C	BUSY	Indicating printer busy
12	12	P to C	PE	Indicating paper empty
13	13	P to C	SLCT	Indicating printer on line
14	14	C to P	LF/CR	Auto linefeed after carriage return
15	32	P to C	ERROR	Indicating printer error
16	31	C to P	INITIALIZE	Initialize printer
17	36	C to P	SLIN	Select/deselect printer
18-25	19-30 and 33	P to C	GND	Twisted-pair return Ground
	18,34		Unused	
	16		Logic GND	Logic ground
	17		Chasis GND	Chasis ground

'C' = Computer 'P' = Printer

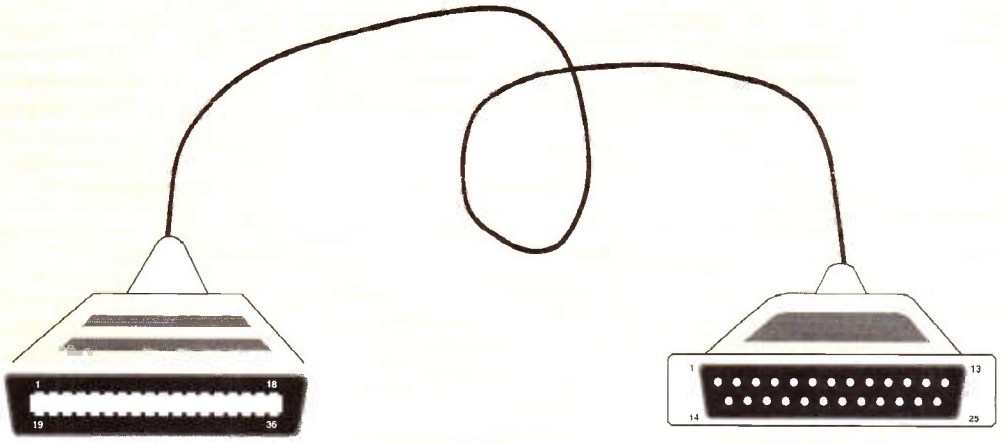

Connected to printers
36-way Centronic male connector

Connected to computers
25-way D-type male connector

Figure 3. Standard printer leads and plugs.

CONTROL and STATUS port. Their I/O addresses are calculated using the expressions in Table 1. The bit functions of the ports are summarised in Table 2.

It can be seen that the printer base address is the same as the address of the data port. The base addresses for LPT1 and LPT2 are listed in Table 3. The address values are in decimal and in hex format.

The base address for LPT1 varies. This depends on the hardware configuration of the PC. The parallel port that comes with the monochrome display adaptor card has a base address of 956 decimal and that comes with an I/O expansion board, which has an address of 888 decimal.

There are several ways to obtain the base address. One is to check the hardware report of the computer. Several software packages can do this. The other way is to find the addresses directly from user's program. When the computer is powered on or reset, the BIOS (Basic Input Output System) checks all the possible Centronic port addresses. If it finds an installed Centronic port, it writes the addresses of the ports to a special memory location. For LPT1, this address (a 2-byte word) is stored at 0000:0408 and 000:0409 (in hex). By poking these memory locations, the base address can be obtained. The memory locations for LPT1 to LPT3 are listed as follows:

LPT	Memory address
LPT1	0000:0408 - 0000:0409
LPT2	0000:040A - 0000:040B
LPT3	0000:040C - 0000:040D

This is another useful one-byte memory location, 000:4011. It stores the total number of installed Centronic ports. It is noted that this information is contained in DB6 and DB7, as shown below:

DB7	DB6	Number of Centronic ports installed
0	0	0
0	1	1
1	0	2
1	1	3

The following procedure written in Turbo Pascal 6 detects the number of Centronic interfaces installed and assigns the number to a variable, *Number_of_LPT*. Then it reads the base address from the memory location holding that address of LPT1 and assigns the value to a variable, *P_address*.

```
Procedure Input_
printer_address;
{Find the printer
address of LPT1 and
print out the result}
var
  P_address1, Number_of_LPT:
integer; begin
  number_of_lpt:=(mem[$0
000:$0411] and (128+64))
shr 6; {read DB7 and
DB6 bit from a specified
memory location}
  P_address1:=memw
[$0000:$0408];{read a
word from a specified
memory location}
  writeln('Total number
of' installed Centronic
interface:', Number_of_LPT:2);
  writeln('LPT1 address
-', P_address1:3,'- was
detected on your PC');
end;
```

This procedure can be easily converted into other programming languages.

CPU I/O Address	DATA PORT (PC to printer)	CONTROL PORT (PC to printer)	STATUS PORT (printer to PC)
PT1 to LPT3	Base address	Bass address + 2	Base address + 1

Table 1. I/O Addresses of the DATA, CONTROL and STATUS port.

Bit	Centronic port name	Functions
Data Port		
bit 0-7	DB0 - DB7	data from bit 0 to bit 7
Control port		
bit 0	–STROBE	LOW=normal; HIGH=output of data
bit 1	–LF/CR	LOW=normal; HIGH=auto line feed after carriage return
bit 2	–INITIALIZE	LOW=initialize printer; HIGH=normal
bit 3	–SLIN	LOW=deselect printer; HIGH=Select printer
bit 4		LOW=printer interrupt disabled; HIGH=enabled
bit 5-7		Unused
Status port		
bit 0-2	UNUSED	Unused
bit 3	–ERROR	LOW=printer error; HIGH=no error
bit 4	SLCT	LOW=printer not on-line; HIGH=printer on-line
bit 5	PE	LOW=printer has paper; HIGH=out of paper
bit 6	–ACK	LOW=printer acknowledges data sent; HIGH=normal
bit 7	BUSY	LOW=printer busy

Table 2. Bit functions of the input/output ports of the Centronic port.

Centronic port	Bass address
LPT1, with mono card	956D, (3BCH)
LPT1, with I/O card	888D, (378H)
LPT2, I/O card	632D, (278H)

Table 3. Bass address for LPT1 and LPT2 printer port.

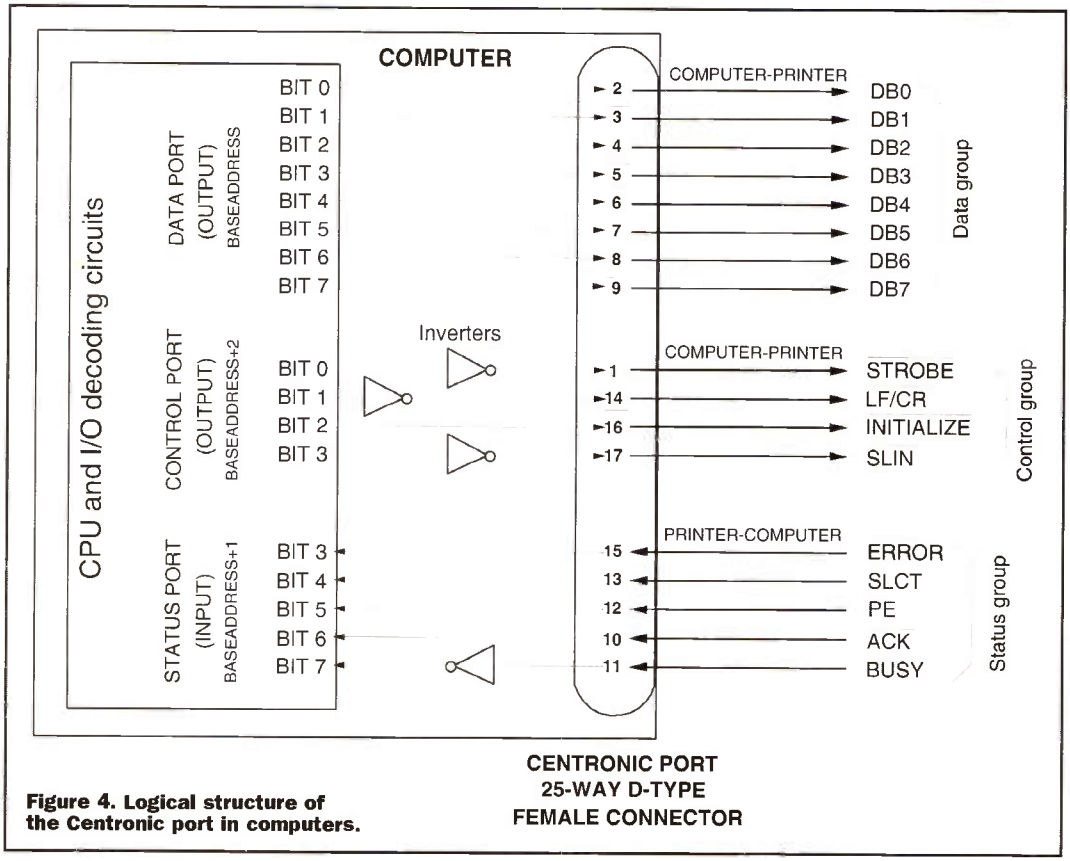

Figure 4. Logical structure of the Centronic port in computers.

There are three ways to control data flow of the Centronic port:

I. **Using Printer Commands**
This method uses the commands controlling printer operation. For example, in BASIC, this instruction is 'PRINT'. In Turbo Pascal, it is 'WRITELN(LST)'. When executing such instructions, the DATA, CONTROL and STATUS groups operate together and cannot be used individually. This method is only useful for printer operations. For general purpose I/O interfacing applications, it is not recommended because of the lack of flexibility.

II. **Using BIOS Interrupt**
Another method uses BIOS interrupt INT 17h. This method is similar to method I.

III. **Using Direct I/O Access**
This method controls the DATA, CONTROL and STATUS ports separately using direct I/O access instructions. In this case, the Centronic port is treated as three separate I/O ports: two of which are output ports and one of which is an input port. Let us take an example of controlling LPT1. Assuming that the addresses of the DATA, CONTROL and STATUS ports are 888D, 890D and 889D, respectively, to send data to the DATA and the CONTROL ports, the following procedures are used:

In BASIC: OUT 888, x and OUT 890, x
In Turbo Pascal: PORT[888]:=x and PORT[890]:=x

– in which x is the output value in decimal. To read data from the STATUS port, the following procedures are used.

In BASIC: Y=INP[889]
In Turbo Pascal: Y:=PORT[889]

– in which Y is the decimal value of the input data.

Referring to Figure 4, it should be noted that when writing data to the CONTROL port, the 4 output lines correspond to bits 0 to 3 of port 890D and bit 0, bit 1 and bit 3 are inverted. When reading data from the STATUS port, the 5 input lines correspond to bits 3 to 7 of the port 889D and bit 7 is inverted. As a result, bit modification has to be performed for the data to be sent to the CONTROL port and the data received from the STATUS port. The following two examples show how to do this.

Figure 5. Pinout of the 8255 PPI and 74LS241 octal buffer.

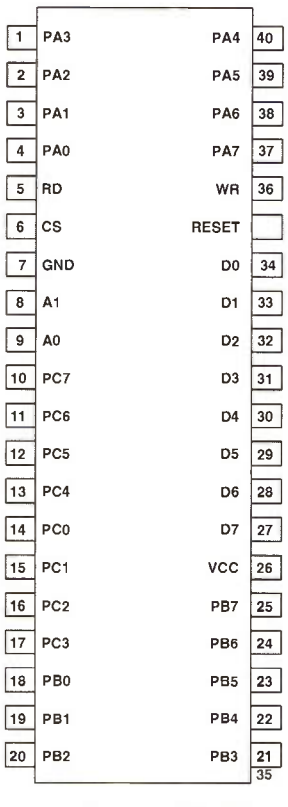

(a) Pin-out of 8255 PPI

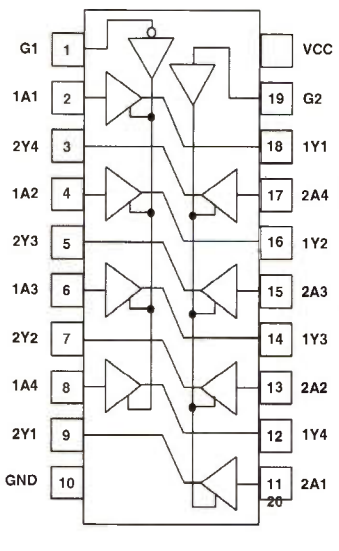

(b) Pin-out of 74LS241

Example 1
In an application, all the lines in the CONTROL port are required to output '1' at the same time. When using a Turbo Pascal command PORT[890]:=x, what is the value x?

Solution
DB0=0, DB1=0, DB2=1, DB3=0; x is equal to 4. You may see that DB0, DB1, DB3 are all 0, however, after being inverted, the output values from the Centronic connector are all 1.

Example 2
In an application, a 4-bit data from DB0 to DB3 are connected to BIT 3-6 of the STATUS port. When using a Turbo Pascal command Y:=PORT[889], how is this 4-bit data obtained?

Solution
Step 1. Executing 'Y1:=PORT[889]' inputs the 4-bit data. The binary format from MSB to LSB of Y1 is X3210XXXB. 'Xs' are the bit values which are not used. '3 2 1 0' are the bit values of DB0 to DB3 of the input 4-bit data. The following procedure is to convert X3210XXXB to 00003210B.
Step 2. Executing 'Y2:=Y1 AND 120' (Bitwise logic AND operation for Y1 and 120D=01111000B) converts Y1 (X3210XXXB) into Y2 (03210000B).
Step 3. Executing 'Y3:=Y2 SHR 3' (bitwise shift right 3 bits) converts Y2 (03210000B) into Y3 (0003210). Hence, Y3 is equal to 00003210B, which has the same value as the input data.

8255 Peripheral Parallel Interface (PPI)

Figure 5(a) shows the pinout of the 8255 IC. GND (Pin 7) and VCC (Pin 26) are connected to the ground and +5V power supply rails, respectively. It has 24 input/output lines which are arranged in three 8-bit ports, namely Port A, B and C. The

Modes	Description
Mode 1	Port A can be set as an 8-bit input or output port. Mixture of inputs and outputs is not possible. Port B is configured in the same manner as Port A. Port C is split into two halves (upper 4 bits and lower 4 bits), with each half configured as either inputs or outputs. The mixture of inputs and outputs in each half is not possible. All the outputs are latched.
Mode 2	Mode 2 configures the 8255 PPI as strobed I/O ports. Port A and B are configured as two independent 8-bit I/O ports. Each of them has a 4-bit control port associated with it. These control ports are formed from the lower and upper 4 bits of the Port C, respectively. In this mode, data applied to an input port must be strobed in with a signal produced in external hardware. An output port is provided with handshake signals that indicate when new data is available at its outputs and when an external device has read the values.
Mode 3	Only port A can be initialised in this mode. In this mode, port A can be used for bi- directional data transfer. This means that data can be output or input on the same eight lines. If Port A is initialised in Mode 2, pins PC3 through PC7 are used as handshake lines. The other three pins, PC0 through PC2, can be used as ordinary I/O lines if port B is configured in Mode 0. These lines will be used as handshake lines of Port B if the port is configured in Mode 1.

Table 4. Modes of the 8255 PPI.

Bit number	Description	Function
Bit 7	Mode set flag	1=Active
Bit 6	Mode selection	00=Mode 0 01=Mode 1
Bit 5	Mode selection	1x=Mode 2
Bit 4	Mode control of Port A	1=Input, 0=Output
Bit 3	Mode control of upper 4 bits of Port C	1=Input, 0=Output
Bit 2	Mode selection	1=Mode 1, 0=Mode 0
Bit 1	Mode control of Port B	1=Input, 0=Output
Bit 0	Mode control of lower 4 bits of Port C	1=Input, 0=Output

Table 5. Pin functions of the control word.

8255 has four internal registers, three of which are called peripheral registers and are associated with Port A, B and C. The fourth one is a control register. The peripheral registers are used for data transactions between the 8255 PPI and external circuits and the control register is used to initialise the operation modes of the PPI.

There are 8 bi-directional data lines (DB0-DB7, pins 34-27), through which data is written to or read from the internal registers under the control of –RD (Pin 5) and –WR (Pin 36) lines. The address lines A0 (Pin 9) and A1 (Pin 8) are used to select a particular register. The relationship between the address lines (A0 and A1) and the registers is shown below:

Internal Registers	A0	A1
Register A	0	0
Register B	1	0
Register C	0	1
Control Register	1	1

–CS (Pin 6) line must be taken low to enable the IC. RESET (Pin 35) line is active high. After a reset, all the lines of Ports A, B and C are configured as input lines. In normal operations, RESET line must be held low. The 8255 PPI has three operation modes: Modes 0, 1 and 2, by which the three ports can be configured as inputs or outputs. Table 4 summarises the operation modes.

Control word	Bit 4	Bit 3	Bit 1	Bit 0	Port A	Port C (upper)	Port B	Port C (lower)
128	0	0	0	0	Output	Output	Output	Output
129	0	0	0	1	Output	Output	Output	Input
136	0	1	0	0	Output	Input	Output	Output
137	0	1	0	1	Output	Input	Output	Input
130	0	0	1	0	Output	Output	Input	Output
131	0	0	1	1	Output	Output	Input	Input
138	0	1	1	0	Output	Input	Input	Output
139	0	1	1	1	Output	Input	Input	Input
144	1	0	0	0	Input	Output	Output	Output
145	1	0	0	1	Input	Output	Output	Input
152	1	1	0	0	Input	Input	Output	Output
153	1	1	0	1	Input	Input	Output	Input
146	1	0	1	0	Input	Output	Input	Output
147	1	0	1	1	Input	Output	Input	Input
154	1	1	1	0	Input	Input	Input	Output
155	1	1	1	1	Input	Input	Input	Input

Table 6.

The operation modes of the 8255 PPI are initialised by writing an 8-bit control word to the control register. The bit function of the control word is explained in Table 5.

In the present project, we only use Mode 0. For other modes, please refer to the manufacturer's data sheets.

In Mode 0, as we already know, Port A and Port B can be configured as either inputs or outputs. Port C is split into two halves which can be also configured as inputs or outputs. All possible control words for configuring Ports A, B and C are listed in Table 6 for a quick reference. Bit 2, Bit 5, Bit 6 are all 0. Bit 7 is 1.

Part 2 – Next Month.

VISIT A MAPLIN STORE FOR ELECTRONICS AND MORE

NEW STORES NOW OPEN IN MAIDSTONE AND WATFORD

TELEPHONE CUSTOMER SERVICES ON (01702) 554002

FOR DETAILS OF YOUR NEAREST MAPLIN STORE

MAPLIN CATALOGUE STORE

BELFAST BIRMINGHAM BRADFORD BRIGHTON BRISTOL CARDIFF CHATHAM CHEETHAM HILL COVENTRY DUDLEY EDGWARE EDINBURGH FOREST HILL GLASGOW HAMMERSMITH ILFORD LEEDS LEICESTER LUTON LIVERPOOL MAIDESTONE MANCHESTER MIDDLESBROUGH MILTON KEYNES NEWCASTLE-UPON-TYNE NORTHAMPTON NOTTINGHAM PORTSMOUTH PRESTON READING SHEFFIELD SLOUGH SOUTHAMPTON SOUTHEND-ON-SEA STOCKPORT STOKE-ON-TRENT WATFORD

E-mail your views and comments to: AYV@maplin.demon.co.uk

Write to: *Electronics and Beyond*, P.O. Box 777, Rayleigh, Essex SS6 8LU

Big Sounds

Dear Editor,

I have pleasure in informing you of an idea of a loudspeaker enclosure which is a development from a system which was granted a patent on 15th May 1996.
It involves cutting an 8 × 4ft. sheet of plywood or chipboard diagonally, to form the top and bottom of the enclosure. A panel along the two long sides and an internal baffle completes the design. It is a development of the 'Basset' which appeared in *Hi-Fi News* some years ago. The enclosure would be about 15in. high if a 12in. loudspeaker was used, and 2ft. 6in. high if two 12in. speakers were used. It is not confined to bass, but will make quite acceptable sounds as a full range enclosure if suitable speaker or speakers are used. The long side is preferably against a wall with the large orifice facing the audience.

G. Johnston BSc MASc, Kilmarnock, Ayrshire.

Thank you for supplying us with this novel loudspeaker enclosure design, presumably designed with a larger than average-sized room in mind!

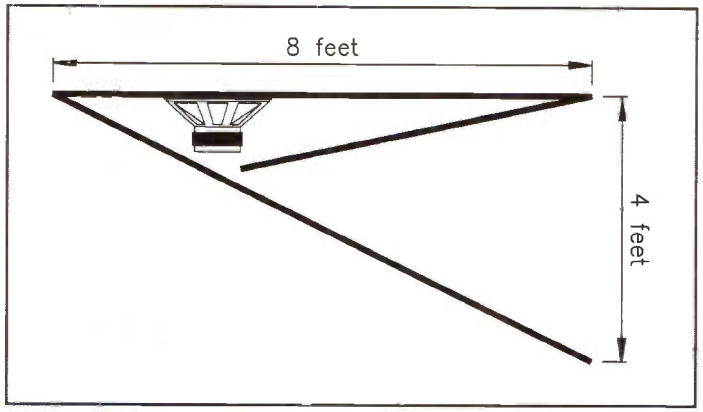

Resurfaced

Dear Editor,

I wonder if you can help me. I note in the most recent issue of the Maplin catalogue, a large number of surface mount devices. I have always associated these devices with automatic assembly equipment, but appearing in a DIY catalogue makes me wonder if it may be possible to construct circuits with them. Do you have any experience of using such devices or do you know of any leaflets or application notes which provide information on how to attach these devices to PCBs?

T. E. Price <eprice@clara.net>

Thanks for your e-mail. The new Maplin Professional Supplies (MPS) Catalogue caters for both private and commercial electronics customers, hence some items (such as Surface Mount Devices – SMDs) may previously not have been readily available to DIY constructors. We have featured a number of projects in *Electronics and Beyond* – the Maplin Magazine, that use SMDs. Notable examples are the Memo Pad (Issue 87) and Super-Scan Mkl and MkII Active Aerials (Issues 89 and 106, respectively). With care, it is possible to DIY-fit most of these devices to PCBs - assembly methods are provided in the articles.

That's A lot of ...ions

Dear Editor,

With reference to R. Howes' letter in Issue 110, I have to advise you that in real terms (taking into account various devaluations, inflation and conversion to decimal), the equivalent of eighteen guineas £18:18/- in 1929 would be some figure between £700 and £1,000 in today's money. This put radio totally beyond the means of working people of the day, when some annual wages were less than that. Regarding AC/DC sets, non-standard knobs or replacement grub screws of the incorrect length in knobs can be an additional hazard. Lastly, now that battery eliminators for battery sets are no longer available, could you provide a kit to build one? This would provide an high-tension (H.T.) voltage of 90 or 120V DC and 1·5 or 2V low-tension (L.T.). Some battery sets which were powered by accumulators had 2V L.T., while those powered by dry cells had 1·5V L.T. – I still have both types in my collection.

John Munro, Keith, Moray District.

Your project suggestion has been noted, although a valve power supply circuit was detailed in the Millennium amplifier project – see issue 73 of Electronics. This provides an H.T. of approximately 450V (DC) and L.T. of 6·3V (AC), and the circuit could easily be modified (by changing the transformers) to produce the supply voltages you require, with an extra rectifier stage to give a DC low-tension supply.

Double-Throw Double-Take

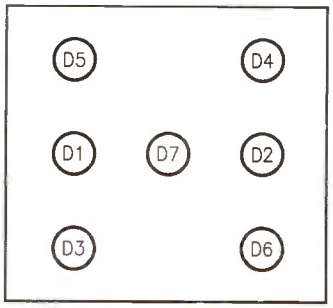

Dear Sir,

I was very pleased to see Robert Penfold's article on the Double-Throw Dice in Issue 109, page 42, and I am grateful to him for highlighting the HT2070 IC. This is an interesting chip, new to me, and with a lot of functionality per £ spent and per cm² of board space. I am building it into a cube, using two small LH57M potting boxes with their open sides together, a DP50E tilt-switch to initiate the rolling sequence when the die is tilted or shaken, and power from two N cells in a JG80B holder. Unfortunately, Robert did not mention which IC outputs should be connected to which LEDs, and I have done this by trial and error. However, my best arrangement does not correctly reproduce the spot patterns of a die; if the other scores are shown correctly, then the 2 shows at the ends of the crossbar of the 'H', instead of at the ends of the same diagonal which forms the 3. I should like to hear Robert's comments on this. Did he get all the score patterns correct?

Ron Cook, Frome, Somerset.

We apologise for the omission of the diagram showing the positioning of the LEDs within the 'H' pattern (see diagram), which was no fault whatsoever of Robert's – it was an oversight on our part not to include it!

Charge of the Light Brigade!

Dear Sir,

With reference to the Car Battery Monitor kit (LT56L), I have come up with the following modification that your readers may be interested in. With the modification shown, the status LED will show RED as normal when the battery is being drained and GREEN as normal when the battery is being charged. However, the LED will extinguish when the battery has been fully charged and in a floating state (normally about 10 minutes of average driving with a healthy battery). R10 & R15 could be reduced in value to 360Ω, but in practice, the unit works just as well with no change. Circuit 'A' shows the modification using the existing LED, while circuit 'B' shows the modification using the QY83E bi-colour LED instead.

Alan Gilbert, Towcester, Northants.

Many thanks for your circuit modification, although the project (featured in Issue 78 of *Electronics*) already features a tri-colour LED charge/discharge/quiescent state indicator as standard, with an optional centre-zero moving-coil meter.

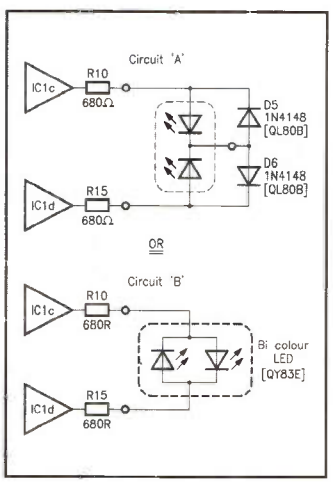

In this issue, Roy Mason of Panborough, Somerset wins the Star Letter Award of a Maplin £5 Gift Voucher for his letter, which shouldn't be takin in isolation!

£5 MAPLIN GIFT VOUCHER

Star Letter

Dear Sir,

In your February 1997 magazine (Issue 110), a reader's letter very correctly gave a warning to younger electronics enthusiasts about the dangers of live chassis on AC/DC radios and TVs. During their heyday, I worked on many of them and was very aware of the dangers, although many of the public were not and ran them with missing or broken knobs. Even worse were the types of radio which used 'linecord' to drop the mains voltage down to a suitable level for the valve heaters. Often, it was frayed or kinked, which caused hot spots. These days, I sometimes refurbish such radios just for the pleasure of getting them working after being defunct for perhaps 40 years. It is with the live chassis in mind, and wishing to use an oscilloscope on the chassis, plus sundry other instruments, that I constructed a mains isolation box from whatever transformers were lying around in my junk boxes. It requires transformers heavy enough to withstand the maximum load, of course. Whilst I was thinking about it, I also decided to make the box switchable to give quite a few other output voltages from approximately 2·5V in steps up to 240V. It is an invaluable tool in my workshop. An AC/DC chassis can be earthed with this box. Any voltage steps in between could be produced by a small variac, which of course, would also be isolated. Any range of mains transformers could be fitted, depending on what is available. In the circuit, S4 is optional as it is just a device to switch a transformer primary to across half of the primary of another to give a half-voltage output. It could be done for several transformers but would be of little advantage with this range of transformers. S2 switches either to the higher or lower voltage ranges, and was included for safety. The LEDs show which range. S2 could be deleted though, and all the primaries wired together, therefore needing only one mains on/off switch. Although the circuit is well suited to my requirements, it is easily modified to suit other peoples' uses. Thank you for including a history article in your magazine. They are of great interest to many of your older readers, who wish to study the beginnings of our pastime. I have applied to the library for a book about Nikola Tesla, which I found mentioned in Further Reading at the end of the Issue 110 article. A project which may be of interest to your readers would be an electronic water descaler. I have one and it works, but like myself, I think many readers would like an article giving a circuit of one. As far as I can recall, no circuit or project has yet been issued by you. I am now retired, after spending a lifetime in electronics. It has meant that I can follow my own bent instead of having to do whatever the factory or lab required of me, and I have thoroughly enjoyed being retired and doing what I wish to. Your magazine keeps me fairly well up-to-date on modern developments and means that I can still converse intelligibly with my brother who is into modern electronics and twenty years younger.

Thank you for your circuit suggestion, though certain other readers' opinions of commercially available electronic descalers leave us doubting whether they actually work at all! Good to hear that you find the history of electronics articles to be of interest.

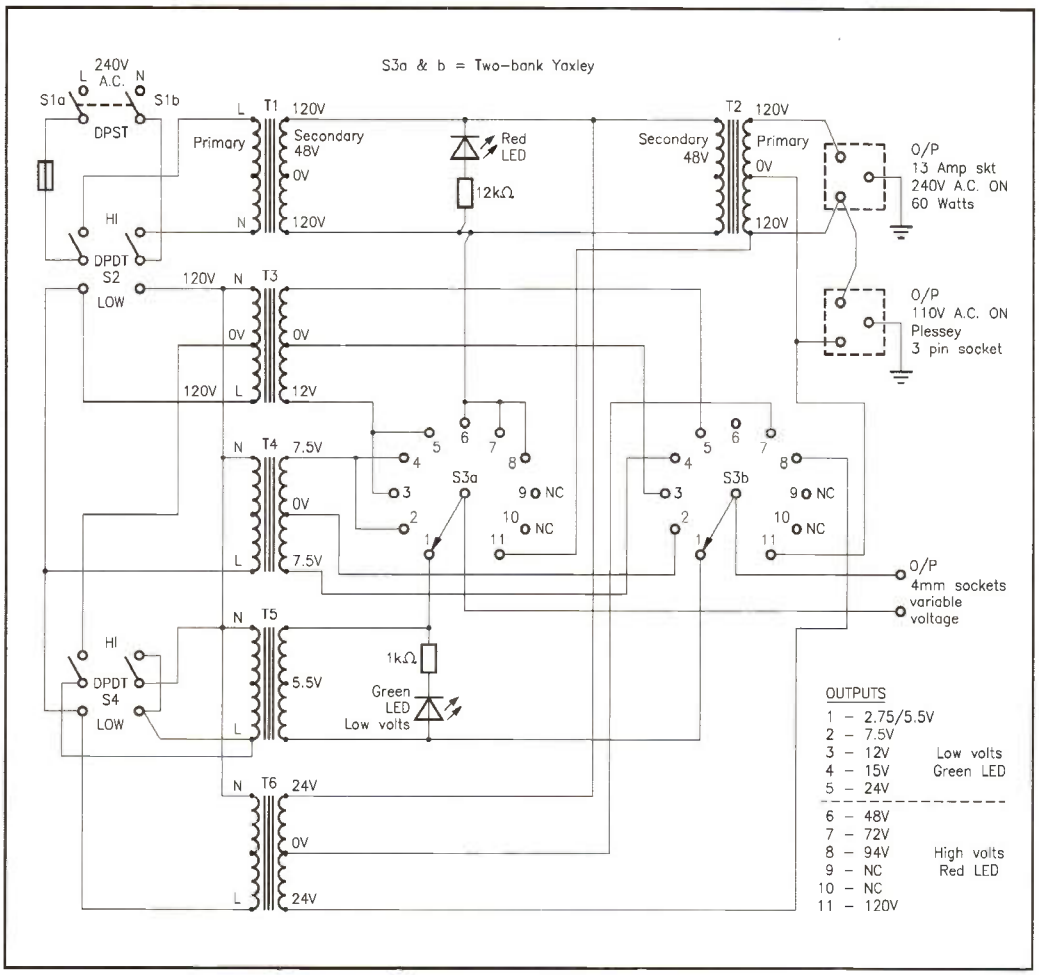

Water Ripoff!

Dear Editor,

In the February 1997 magazine, there was a letter querying the effectiveness of 'electronic water descalers'. It happened that my wife had just bought one, and I decided to have a look inside at the circuitry to see how it works. You were right, what a scam/con! By coincidence, the circuitry is almost identical to your January magazine's project on page 40, 'LED Sweeping Lights', and this is all the unit consists of. In other words, she has paid £75 for a box which produces a sequence of lighted LEDs. The two 'antennas' claimed to sweep from 1·9-5·2kHz are nothing more than the positive and negative leads from the 15V AC supply, and being open-ended 'antennas', there can be no current flow and therefore, no effect. It's a shame that these companies are allowed to con the public (£75 is a lot to pay for 4 flashing lights). The many pages of documentation sent out with the advertising literature were very convincing, and even though I am an RF engineer, even I was conned into believing that this may be worth a try. After the letter in the February magazine, you asked for readers' opinions. Hopefully, you will be able to print this one as a warning. I will also be writing to the manufacturer of the item, demanding a refund, and will send a report to the Trading Standards Office.

Malcolm Sadler, Horton, Somerset.

Thank you for writing in to highlight this scam, though regretfully, we cannot print the brand name of the actual product concerned. At least it achieved some function though, in flashing the LEDs; a recent example of a swindle brought to our attention was that of a 'miracle' electronic gadget that actually consisted of a sealed plastic tube with a knot tied in the concealed end of the wire that went into it – there was nothing else inside! Hopefully, you should have no problem getting a full refund from the company, now that you've put the Trading Standards Office on their case.

WHAT'S IN A NAME

PART 2

A Baud in Your Erlang

by Greg Grant

"...Five to seven hundred cars an hour already, according to police. Traffic news is next..." the announcer said. How did the police work that out? How do they know that almost 700 cars an hour were steaming along the M11 with yours truly among them?

The answer to the rate of car movement is traffic management of some kind, I imagine. Even the sophisticated arrangements of today had simple early beginnings. And 'In the Beginning' here means the Telegraph.

The world's earliest electrical communications device was – in practical and commercial terms – a British invention. The man responsible was Charles Wheatstone, of whom more will be heard in a later article. In 1839, in partnership with W. F. Cooke, Wheatstone created the first true commercial telegraph circuit between Paddington and West Drayton, along the Great Western Railway track. Four years later, the line was extended to Slough and the number of telegraph companies began to increase. Twenty seven years later, the government of the day created a nationalised monopoly by buying the companies out. The exercise cost £8 million, a very considerable sum for those days.

Telegraph traffic was 'guesstimated' in Words Per Minute, (wpm), to begin with and in 1866, four years before nationalisation, the average speed was 12wpm from the nation's 2,900 telegraph offices. Sixty years later, the average speed from the now 13,000 telegraph offices had risen to more than 100wpm or 110 *Bauds*. One hundred and ten WHAT?

Jean Maurice Emile Baudot was a French farmer-turned-telegraph engineer who, in 1874, was granted a patent for a new telegraph code he'd developed. Each letter in this system was represented by a 5-unit combination of 'CURRENT-ON' – 'CURRENT-OFF' signals of equal duration. His 32 permutations provided sufficient space for the alphabet, the punctuation signs in common use and, naturally, the telegraph machine's control functions. All of which meant but one thing: considerable economy compared to the system then in use, that of Samuel Morse, with its short dots and lengthy dashes.

Today, of course, Baudot's system would be termed a 5-bit code of ONES and ZEROS, and so the Baud could be described as a unit of Telegraph Signalling Rate, equal to the number of code elements, either MARKS or SPACES, per second. Another way of putting it is twice the number of Marks per Second.

This, in fact, is the unit of Modulation Rate, an expression of circuit performance, and illustrates the rate at which pulse changes happen. If, let's say, a signal is composed of 20ms pulses, as shown in Figure 1, then the Modulation Rate is:

$^1/_{0{\cdot}02}$ = 50 per second.

This is the Baud Rate, although it doesn't mean that the information is actually *sent* at this speed. The speed at which information is transmitted over a circuit is the Data Signalling Rate. Digital systems, for example, transmit information as a series of pulses whose polarity is either ONE or ZERO. So, the Information Rate and the Data Signalling Rate are not the same in this case.

There are systems, however, where the amplitude is varied as a way of representing different values, whilst the pulse duration remains constant. This means that pulse value depends on amplitude and so could be **10**, **01** or **11**. In other words, Multi-state Signalling. Again, if the pulse duration is 20ms, the Modulation Rate is:

1 × 0·02 Bits per second.

The expression 'bit' was first used by the American physicist, J. W. Tukey, in the late 1940s. Whilst this is the same as 50 Bauds, the Data Signalling Rate in this example is 100 bits per second (bps).

Data Transfer Rate, on the other hand, is the speed at which information is received OVER a circuit, although it doesn't include the control information such as the STOP/START bits. Another aspect it ignores is the redundant characters and additional transmission sequences required through having Error Correction procedures operating in the circuit. Consequently, the Data Transfer Rate is less than the Data Signalling Rate. In other words, Data Transfer Rate means what it says: an accurate summation of a circuit's ability to TRANSMIT data. What's more, the rate can also be expressed in characters, bits, words or blocks received per unit of time.

In 1877, William Preece, the Electrician to the British Post Office (BPO), returned from America accompanied by Alexander

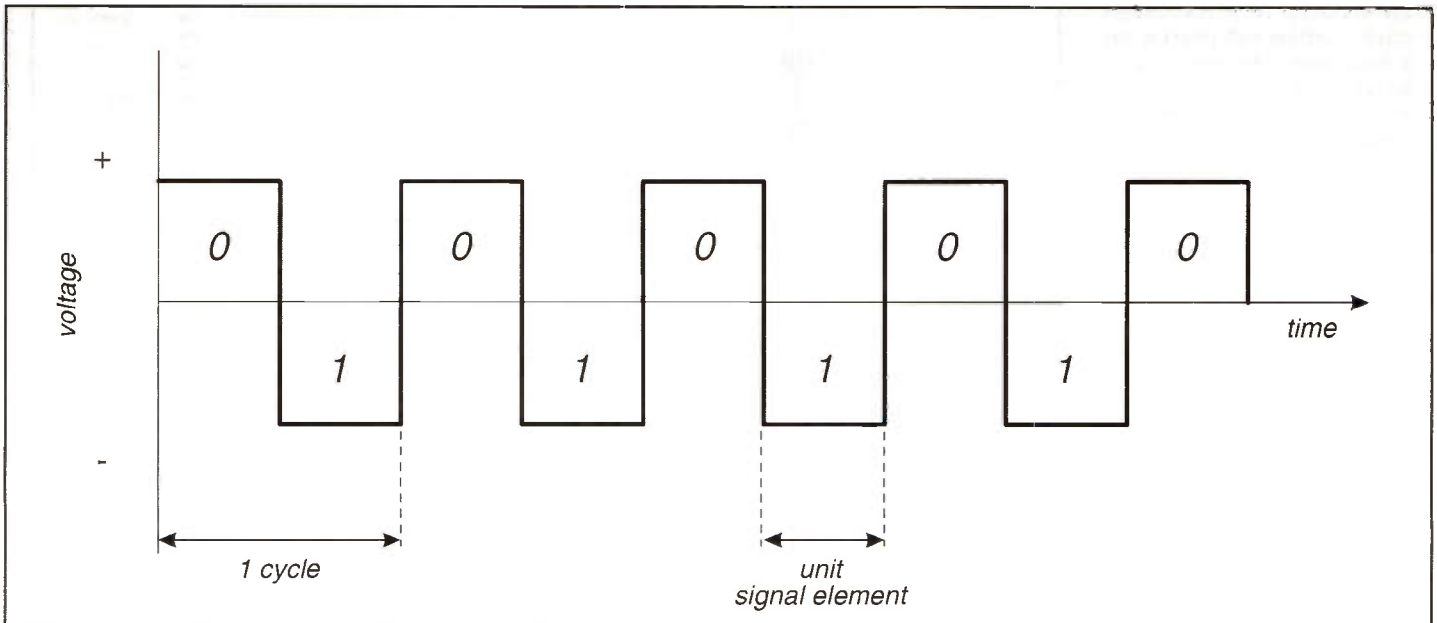

Figure 1. The basic relationship between bandwidth and information.

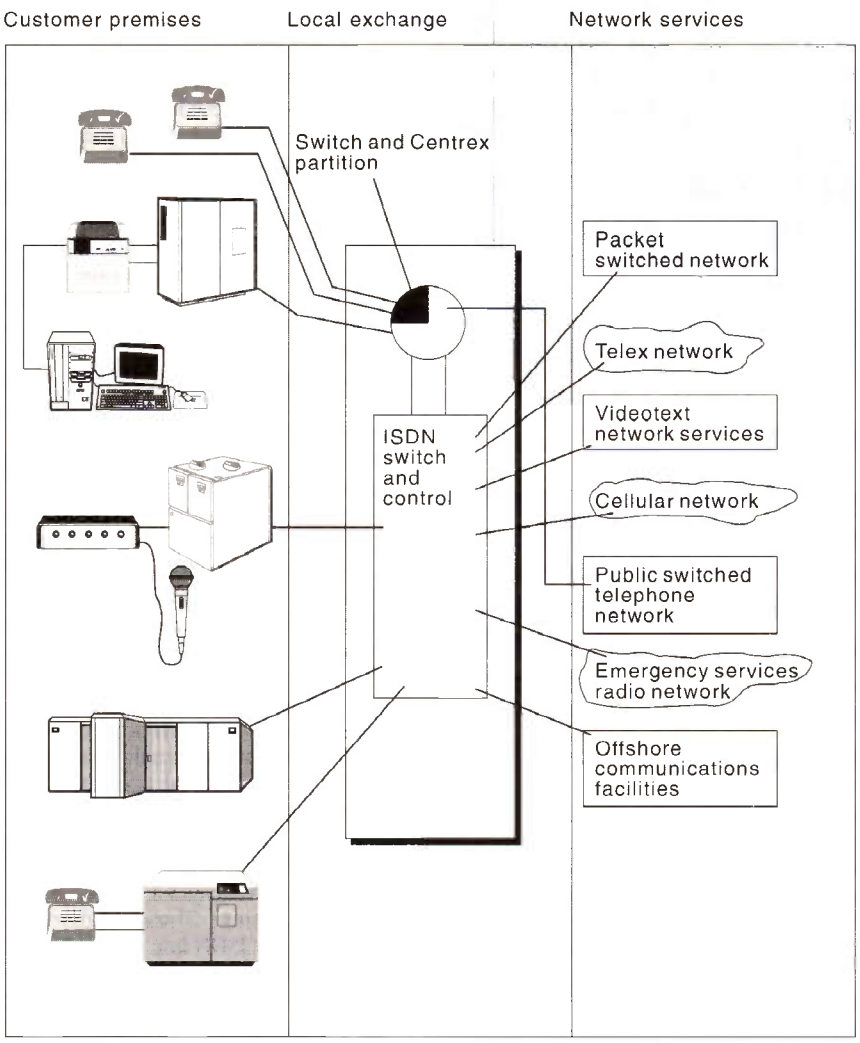

Figure 2. An illustration of the complexity of modern communications networks.

Graham Bell and two models of his recent invention, the Telephone. Preece himself had considerable reservations as to the usefulness of the new device and by the turn of the century, there were still less than 250,000 subscribers in the United Kingdom (UK).

Another new communicative device of the period was the Teleprinter, or Teletypewriter, as it was known in America. It had been invented in Canada in the early 1890s by Fredrick George Creed who, on moving to Glasgow in 1897 in a rare example of reverse emigration, further improved his brainchild. By 1912, the improved version was in commercial use.

Throughout the 1920s, the teleprinter and, above all, the telephone, dealt a near-fatal blow to the UK Inland Telegraph service. When, in 1927, the American radio engineer, Harold S. Black was working at the newly formed Bell Laboratories – developed Negative Feedback (NFB), thus massively reducing line amplifier distortion, and the telephone's future was assured.

The teleprinter had virtually replaced the telegraph by 1933, on the UK Inland service. The teleprinter still used Telegraph Traffic measurement techniques, the telephone being very different by now.

In 1905, the Danish mathematician, Agner K. Erlang, began studying the flow of calls into the main switchboard of the Copenhagen Telephone Exchange. The system was becoming congested and from his investigations, Erlang had, by 1908, expanded his study to include Queuing Theory, work that he continued almost until his death in 1924.

His name is commemorated by telephone engineers in the Erlang, a unit of communications traffic load, equal to the traffic flow whose calls, if placed end-to-end, would keep one path continuously occupied. The expression 'a word in your ear' took on a whole new meaning!

Representing a telephone apparatus working continuously for an hour, the Erlang is a measure of traffic density, found from the formula:

$E = tn/60$

Where t = the AVERAGE duration of a call in minutes and n = the number of calls.

Therefore, 20 telephones, working for 3 minutes in each hour, represents one Erlang's-worth of traffic.

The Erlang is also a measure of traffic experienced. For example, an instantaneous traffic of 10 Erlangs tells you that 10 phone calls are in progress at a particular time.

In a typical Private Branch Exchange (PBX), for example, 0·18 Erlangs is a reasonable figure for each extension. This is the same as saying that the extension is active for 18%, or around 10 minutes, of the busiest hour of the day. In fact, this figure is frequently taken as the starting point when planning telephone services.

Traffic VOLUME, on the other hand, is the amount of traffic in a telecommunications system over a given time. So, supposing no calls are made in S seconds and the duration of the calls are h_1, h_2, - - - h_n seconds, system utilisation is found from:

$$\sum_{i=1}^{i=n} h_i$$

and the Average Traffic, E, will be the amount of traffic in a given time frame, found from the expression:

$$E = \frac{\sum_{i=1}^{i=n} h_i}{S} Erlangs$$

Words per minute are still with us, of course, and are based on the 'Telegraph Word,' a concept not so nebulous as it may appear or, indeed, as vague as that other concept of measurement, the Isotropic Radiator. This is an arbitrary 5-letter word together with one letter space, giving a total of six characters. To convert Characters/second to wpm, multiply the Characters/second by 60/6, giving 10. For example, in a 7·5 unit/50 Baud teleprinter at 6·6 Characters/second, the speed in wpm is given by 6·6 × 10, or 66wpm.

All of the above is important to telecommunications users, who need to know how speedily they can send and receive information vital to their business. It's no less important to the telecommunications providers themselves, who need to know how quickly a circuit can clear traffic. Another aspect of traffic management is commercial comparison between systems. Therefore, knowledge of the number of Characters/second, the Modulation Rates and the Number of Units – including STOP, START, CHECK and PARITY bits – is crucial.

Telecommunications traffic management techniques have advanced considerably since Erlang's day, let alone Baudot's, and have had to.

Figure 2 gives some idea of the complexity of modern communications systems and facilities, highlighting the problems of present-day traffic management. How do you, for example, route telecommunications and computer traffic across the complex, multi-service network shown above, which is by no means as massive as some systems?

At the British Telecom (BT) research laboratories at Martlesham Heath, electronics physicists and engineers are currently experimenting with genetic algorithms in an attempt to find solutions to the sort of problems created by the complexities of Figure 2. Yet, no matter what solution is eventually chosen, I suspect that the world's major telecommunications providers will still be having a Baud in the user's Erlang for some years to come! ELECTRONICS

Sailing the INTERNET

by Alan Simpson

When BT, organisers of the Global Challenge round-the-world yacht race, decided to set up a global Internet multimedia library, they didn't have to look too far. ND Comtec, a leading supplier of publishing and software solutions to the IT world, was selected to undertake the multi-media library thanks to the experience they already had in handling the BT Corporate Picture Library.

The contract also involves distributing pictures to the world's media. Internet Web sites were created and the multimedia library covering the BT Global Challenge was ready for action. And action it certainly was. In the first weeks of the race, the Web pages had been accessed over 100,000 times.

It is all to easy to take for granted the world of instant pictures, whether generated for your TV set or your local newspapers. Pictures can be zapped around the world in the time it takes to zap from BBC1 to Sky Sports 1. Today, virtually every picture that reaches a UK television screen has arrived there either terrestrially or via satellite.

The wealth of experience built up in planning and executing transmission services for all sorts of major events both in the UK and increasingly, overseas by BT and their close rivals, continues to attract broadcasters such as BT, who have been entrusted with coverage of such events as the annual Wimbledon Lawn Tennis Championships, European football championships, the Rugby World Cups and, of course, the last major yachting event, the BT Global Challenge – the round-the-world yacht race. But the expertise that the broadcasters have come to rely on is not restricted to providing transmission services for television or radio for home consumption.

In a multi-media world, high quality broadcast services have many business applications. For instance, specialist production companies in London involved in the many technical aspects of making television commercials use a BT service which provides high quality broadcast links that eliminate the possibility of picture degradation.

Although applications for the global business community are an increasingly important part of the BT Broadcast Services portfolio, it is in television broadcasting that BT is best known, and has established a reputation with the world's leading television companies. Today, broadcasters are driving demand for compression services, which gives them more for their money by allowing multiple video or audio channels along the route normally taken by a single channel. The development and production process is considerably more advanced than that delivered by your local 60-minute photo print shop.

High Tech Makes a Splash

On Sunday 29th September 1996, 14 identical yachts set off on the world's toughest race, around the world against the prevailing winds and tides. Covering over 30,000 miles in 7 legs, taking in 6 continents and sailing 5 seas, scheduled to finish in July 1997. This year, the race involves over 280 crew drawn from all walks of life, many of whom have no prior experience of sailing.

With the involvement of BT and the likes of Motorola, OKI and Nuclear Electric as sponsors, it was decided to match the installed high technology (satellite and Internet) with an onshore web library site. The Global Challenge library contains official photography of the race, as well as press releases and images provided by the race sponsors. It uses proven archiving and picture management software which ND Comtec has been actively installing throughout Europe.

Throughout the race, key news groups can access the world-wide web site and download pictures to their own systems, including those taken onboard by crew members. Just two hours after the yachts arrive or leave port, pictures will be downloaded and put out on the web. Where pictures had been pre-requested, users will have automatically received their photos. Users have to be accredited and have a security password to access the web site which is open for business 24 hours a day. Here, they click on to produce a sample folder of high resolution images and make a selection of required pictures. These are then downloaded by ISDN line at a rate of about two pictures every 3 minutes. (Non-ISDN users can use standard lines taking more than 5 minutes per picture, or rely on the post).

ND Comtec offers journalists the ability to view all available photography on-line before making a selection. They can then select the method of distribution, either electronic (via the Internet or modem) or the traditional

At ND Comtec, where images to be archived are scanned into the BT Corporate Picture Library database, from where an image can be sent via ISDN within minutes.

method of duplicate prints. It is this immediacy of response and accessibility of the service (access will be 24 hours a day) which was instrumental in ND Comtec winning the contract.

Step Into the Future

The BT Global Challenge Picture Library run by ND Comtec on behalf of BT Global Challenge, contains high resolution scans of pre-race photography, skippers and crew as well as material from the race itself. The library also contains other artwork related to the race.

Images may be selected by following a variety of links. Once one or more images have been selected, they may be transferred to a transmission basket by clicking on the export button. The images may then be retrieved using ISDN Manager, EasyTransfer or TeleFinder. Prints and other materials are also available by contacting ND Comtec.

- People – this link provides picture of skippers and crew and includes both formal portraits and onboard photography.
- Places – this link provides access to both race pictures and pre-race photography. It is organised by race stages, including time between legs.
- Plans – this link provides access to artwork related to BT Global Challenge. This includes maps, etc.
- Search – this link provides access to a form which allows the picture resources to be searched using a number of pre-defined criteria as well as 'free-text' searching.
- Download Instructions – this link provides details of how to download images as well as obtaining hard copy material.
- Race Reports – this link provides up to the minute race reports from the BT Global Challenge web site.
- Recent News Releases – this link provides a list of recent news releases as well as the full text. A further link is provided to the news release archive.
- Recent Pictures – this link provides a quick way to review recent pictures from the race. High resolution scans of these images may be downloaded from the Picture Library.
- Media Schedule – this link provides access to the Media Schedule including details of changes and estimated arrival times and sponsors and contacts.

Challenge of the Internet

The sequence of events involved in the Web proceed in a high-tech manner. A photographer takes the picture and it is developed. The resultant negative is then scanned to produce a digital image which is 18-21M-byte for a normal picture or 8-12M-byte for a head shot (this is because head shots are rarely enlarged to the same extent as action pictures.

The scanned image is then read into Photoshop where ND Comtec uses the SCC plug-in (from Software Construction Company) and captioning and outputting a standard compressed image (JPEG). All the captioning is completed using the IPTC file format which is fully supported by SCC. In this way, ND Comtec know they are captioning pictures using a standard layout used by most newspapers across the world.

Competitors in the BT Global Challenge yacht race.

The images and caption are then loaded to the Web site using in-house Platypus software. On the Web site, ND stores on line a 5-7K-byte thumbnail of the image and a 35-37K-byte screen preview. The extraction is completed by ND software. The thumbnail is used to allow Web browsers to view many pictures without overloading the network by moving around high resolution images. When the browser sees an image in which they are interested, a double click on the image brings up the screen preview which is sufficiently detailed such that the browser can decide if they want that particular picture.

A selection at this point moves a copy of the high resolution image into a folder to be collected by the browser either by ISDN or by a Modem type program. The high resolution images are stored on a Novell networked jukebox so that the ND does not clutter up the system with large files.

Access to the pictures on the Web is either by HTML or more usually via Free Text Retrieval using the text input to the IPTC fields to describe the picture. Unlike most other Web sites, ND use Free Text Retrieval, where every single word has been indexed, therefore, a record can be found even if only one word is remembered.

Spot the Trip Search Engine

Platypus is modular and can support a variety of search engines. On the BT Global Challenge Web site, ND uses the Trip search engine running under UNIX on DEC Alpha hardware. ND uses Raid 5 Disk technology and Mercury NSM jukeboxes. The Web site supports all standard browsers on PC or Mac.

When local prints are required from the system, they use the FUJI Pictography PS200, which produces near-photographic quality up to A3 size within 90 seconds for the first print, subsequent prints taking about 1 minute each. Additionally, they are set up to handle picture transmission (for those people who cannot download pictures themselves and for these, the company has 2 dedicated Macs running ISDN Manager Easitransfer or Telefinder).

The Internet – Challenge and Opportunity

As Roy Dewell of the ND Comtec says, "the Internet, and particularly the World Wide Web (or Web), provides both the greatest challenge and the greatest opportunity for publishers. Whilst the industry is still struggling to find ways of making money from the Web, everyone is agreed that publishers cannot afford to ignore it. They must, therefore, establish themselves quickly if they are not to be overtaken by new ventures. Publishing on the Web presents special challenges. It is all too easy for a Web site to end up as a collection of dull static pages. ND Comtec have many years experience in publishing systems and, as a division of Telenor, the Norwegian PTT, we are in a unique position to assist publishers establish an active presence on the Web."

There may not be any heroes any more, but those valiant crews taking part in the Global Challenge will score high marks, as will the diligent team at ND as they battle with the high-tech elements to bring us race pictures of a high definition vision. And it is a vision you can share. Win our easy-to-enter contest and you could be making a personal visit to the web centre itself. Or win a selection of high-definition pictures of your choice on a CD-ROM. Surfing the net was never more interesting.

Internet Sources

The site Internet addresses are:

`www.serviceteam.co.uk/media/btchallenge`
Guest access to this site is available with Neptune as the password.

`www.serviceteam.co.uk/library/courtaulds`
Official site containing additional pictures and information on the Courtaulds sponsored yacht.

SAILING THE INTERNET

Exclusive Competition

You don't have to brave the oceans of the world to win this month's challenge. You can view at first hand the exciting world of Internet picture transmission. The winner (and partner) of our contest will be invited to visit The Global Challenge web site. It includes a day out at ND COMTEC in Newbury, Berkshire, including lunch and tour of the building (situated in a stately park) as well as having the opportunity to have your picture accessed via the Internet. There are five runner-up prizes of a free CD-ROM containing pictures of your choice.

How to enter

All you have to do to enter, is complete the coupon, correctly answering the four questions, or send your answers on a postcard of back of a sealed-down envelope. Don't delay – all entries must be received by Friday, 28th February. Send your entry, remembering to include your name and address, and if possible, your day-time telepone number, to the address printed on the coupon.

Please note that employees of Maplin Electronics, associated companies and family members are not eligible to enter. In addition, multiple entries will be disqualified. The prizes will be awarded to the first all-correct entries drawn. The editor's decision will be final. Prizes are not exchangeable for cash. Any related costs (including travel) will not be met by the publication or the contest promoters.

SAILING THE INTERNET M111

Answer all the questions below, ticking one box for each question.

1. How many yachts are taking part in the BT challenge?
- ☐ 14.
- ☐ 114.
- ☐ 4.

2. What is the Internet?
- ☐ The barrier between two tennis courts.
- ☐ The combined Spanish and English fishing fleets.
- ☐ An electronic communications network.

3. Spot the odd one out.
- ☐ The Mainsail.
- ☐ The Rudder.
- ☐ A foot brake.

4. The BT Global Challenge set out from?
- ☐ The Round Pond, Kensington Gardens.
- ☐ Southampton.
- ☐ The Great Bitter Lakes.

Name _____

Address _____

_____

_____

_____ *Postcode* _____

Daytime Telephone Number _____

No purchase necessary.
Entries on a postcard, back of a sealed-down envelope or photocopies will be accepted.

ELECTRONICS and Beyond

Send your entry to
Sailing the Internet Competition,
The Editor, *Electronics and Beyond*
P.O. Box 777, Rayleigh, Essex SS6 8LU.

PROJECT

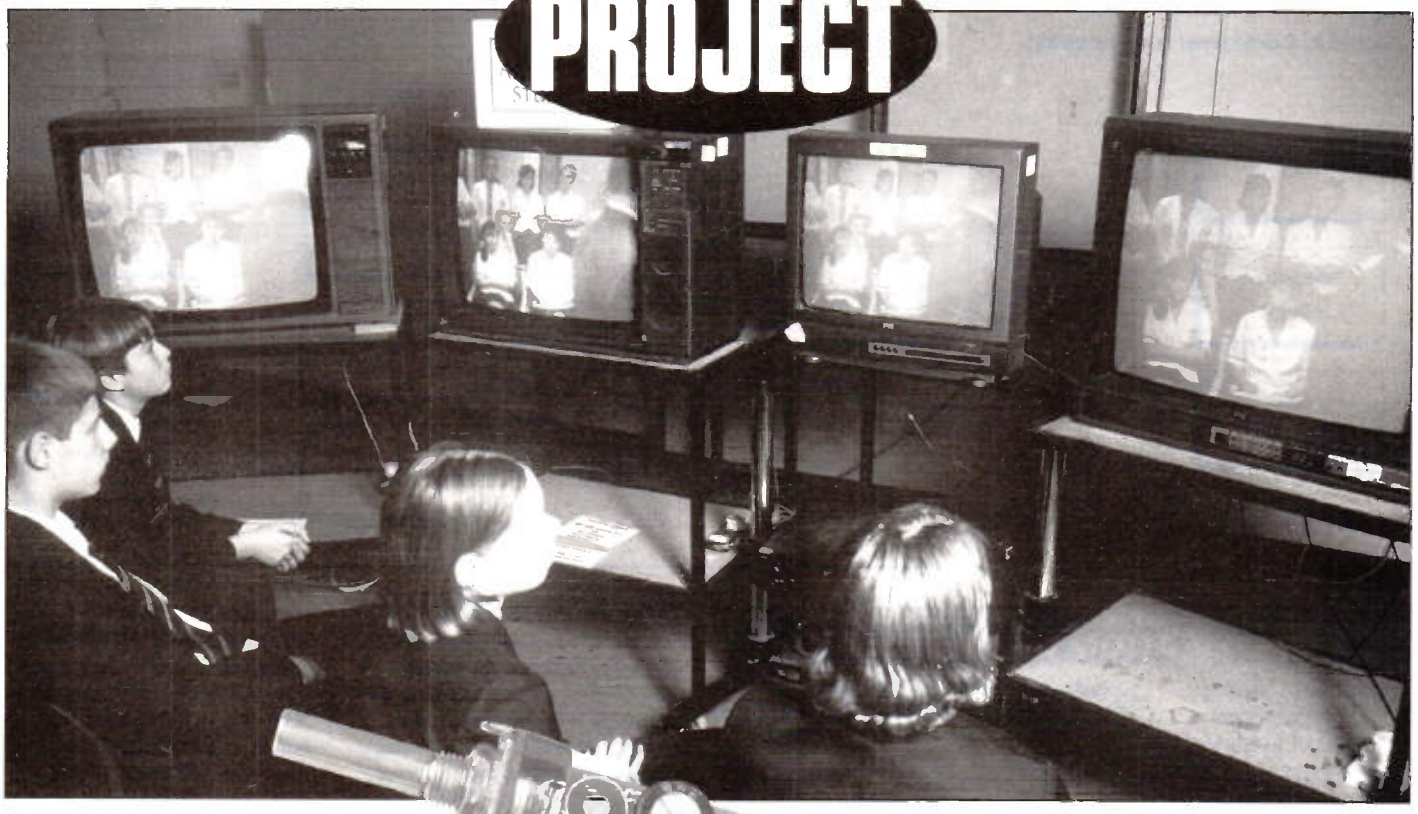

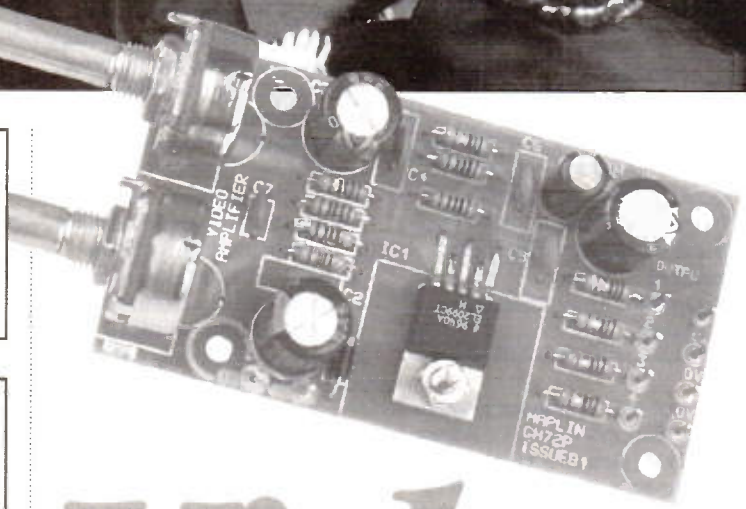

PROJECT RATING 1

Kit Available
Order as LU79L
Price £14.99

FEATURES

- Composite Video input/output
- Units can be cascaded for multiple outputs
- Easy to build and use
- Compact

APPLICATIONS

- Video signal distribution systems
- Video recording
- Relaying of a single TV, VCR or cable/satellite unit's signal to four other units
- Buffering of composite video signals
- Boosting composite video signals

Video DISTRIBUTION AMPLIFIER

Design and text by Chris Barlow

The video amplifier project presented here provides separate 'Video Gain' and 'HF Boost' controls, and four independent outputs to enable the simultaneous feeding of up to four video recorders or monitors.

One of the main criteria in judging the quality of a video recording is in the definition, or picture clearness. This is directly related to the signal bandwidth that the video recorder can handle. During re-recording, some deterioration of picture quality occurs because the signal bandwidth is reduced to some degree. The amount to which the bandwidth is reduced depends on the recording system used and it appears primarily as a greater degree of attenuation at high-frequencies than at low-frequencies.

Further loss of quality may occur through a lowering of the overall signal level, particularly when two or more video recorders, or a video recorder and colour television monitor, are connected in parallel to the output of a master television receiver or recorder. It would be possible to simply increase the gain of the slave equipment; Unfortunately, frequency-selective amplification and good performance cannot be achieved by simple means. There is, for instance, the danger of overloading, which would result in a deterioration, rather than an enhancement, of the signal.

Circuit Description

The circuit diagram of the video distribution amplifier is shown in Figure 2. The composite video signal is processed by an EL2099CT video amplifier, IC1.

Figure 1. Conceptual system wiring.

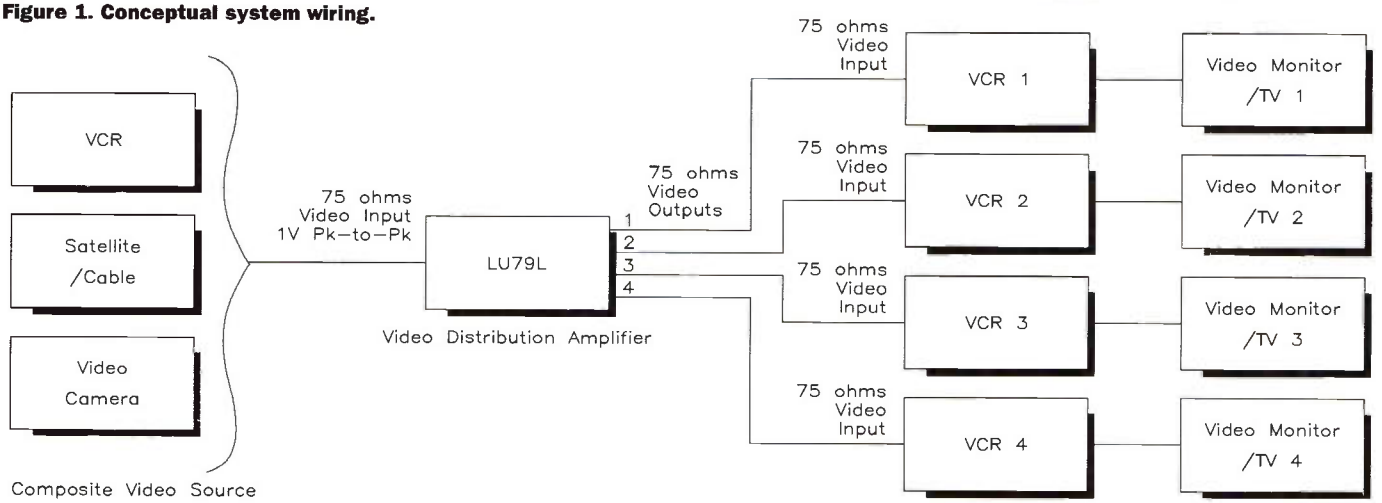

SPECIFICATION OF PROTOTYPE

Power Input Voltage:	11Vdc to 16Vdc (12V nominal)
Power consumption:	50mA at 12Vdc (0·6W)
Number of Video Inputs:	1
Video Input Impedance:	75Ω
Number of Video Outputs:	4
Video Output Impedance:	75Ω
Minimum Video Gain:	0dB (Video gain control set to minimum)
Maximum Video Gain:	8dB (Video gain control set to maximum)
Minimum HF Boost:	0db (HF Boost control set to minimum)
Maximum HF Boost:	8db (HF Boost control set to maximum)
Frequency Response:	20Hz to 50MHz (Gain and HF Boost set to minimum)
PCB Dimensions:	76mm × 42mm × 15mm (excluding optional heatsink)

This device is a high-speed, monolithic operational amplifier featuring excellent video performance and high output current capability. Built using a dielectric isolation process, it uses current mode feedback to achieve its wide bandwidth. The power supply for the circuit must be within the range of 11V to 16Vdc and to prevent any damage caused by reverse polarity connection, diode D1 is used. D1 only conducts when the positive supply voltage is applied to its anode, allowing the DC power to pass to the rest of the circuit. The main power supply rail (+V1) is decoupled by C1 and C2, thus reducing any noise or interference that is supply borne. The DC operating point (+V2) of the amplifier IC1 is determined by two 470Ω resistors, R1 and R2, which form a potential divider. Capacitors C3 and C4 provide decoupling to this half supply reference voltage.

The video input impedance of the amplifier is matched to the standard 75Ω level by resistor R3. Then the video signals are AC coupled via C5 and C6 to the non-inverting input of IC1. This input also has the half supply reference voltage (+V2) applied to it via R4, a 1kΩ resistor. The video gain of IC1 is set by the combined values of R6, R7, and RV2. Resistor R7 is used to feed-back some of the amplified output signal to the inverting input. Resistor R6 is used to set the maximum video gain level, and the variable control RV2 gives manual user adjustment. As this 1kΩ potentiometer is reduced in value (turned clockwise) the gain of the video amplifier will increase. The HF boost circuit acts in a similar manner, with R5 setting the maximum level of boost, and RV1 providing the manual user adjustment. However, a small value ceramic capacitor, C7, ensures that only the higher video frequencies are affected.

The amplified video signals are AC coupled via C8 and C9 to the 75Ω resistor output network R8 to R11. Standard video inputs on recorders and monitors are generally terminated by a 75Ω resistor. Since the amplifier has a gain of not less that 6dB, the video level at any of the four outputs will effectively provide an overall gain of not less than 0db.

Construction

The PCB supplied in the kit is a single-sided, fibreglass type. The sequence in which the components are fitted is not critical. However, the following instructions will be of use in making these tasks as straightforward as possible. Please double-check each component type, value and polarity where appropriate, before soldering as it is much harder to correct a mistake after a component has been

Figure 2. Circuit diagram.

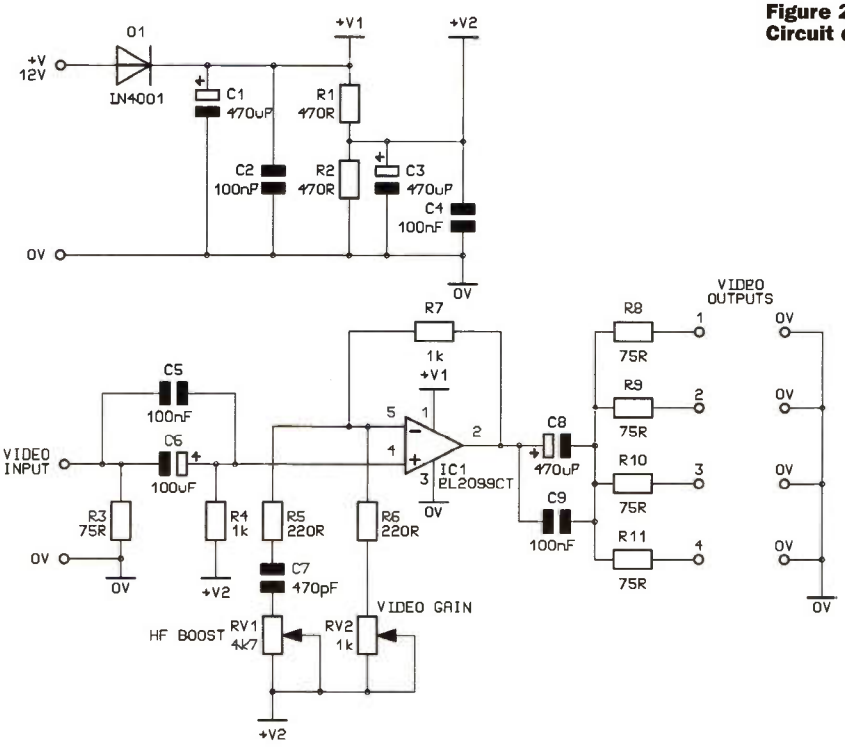

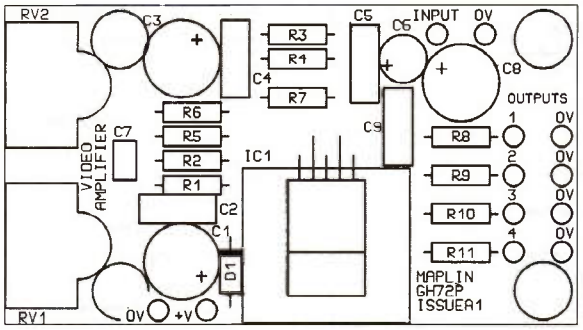

Figure 3. PCB legend and ghost track.

IC without heatsink on PCB.

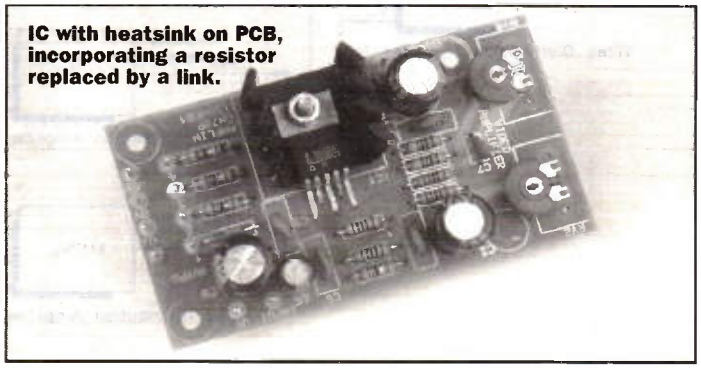

IC with heatsink on PCB, incorporating a resistor replaced by a link.

soldered! It is usually easier to start with the smaller components. Referring to the Parts List and Figure 3, begin with the resistors R1 to R10, do not fit R11, or the potentiometers RV1 and RV2 at this stage. Next install the capacitors C1 to C9, and diode D1, followed by the PCB pins.

In the next stage of assembly you must determine in which mode of operation you wish to use the video distribution amplifier. Standard mode for multiple 75Ω video loads, or high drive current mode for one extremely long run of video cable, or special load requirements.

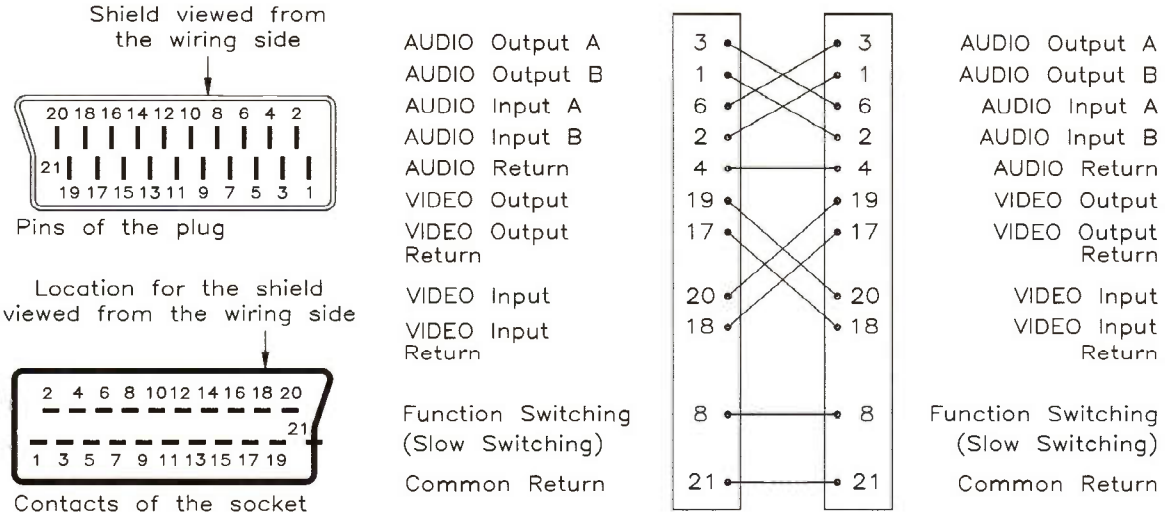

Figure 4. Basic Peritel/SCART connector wiring.

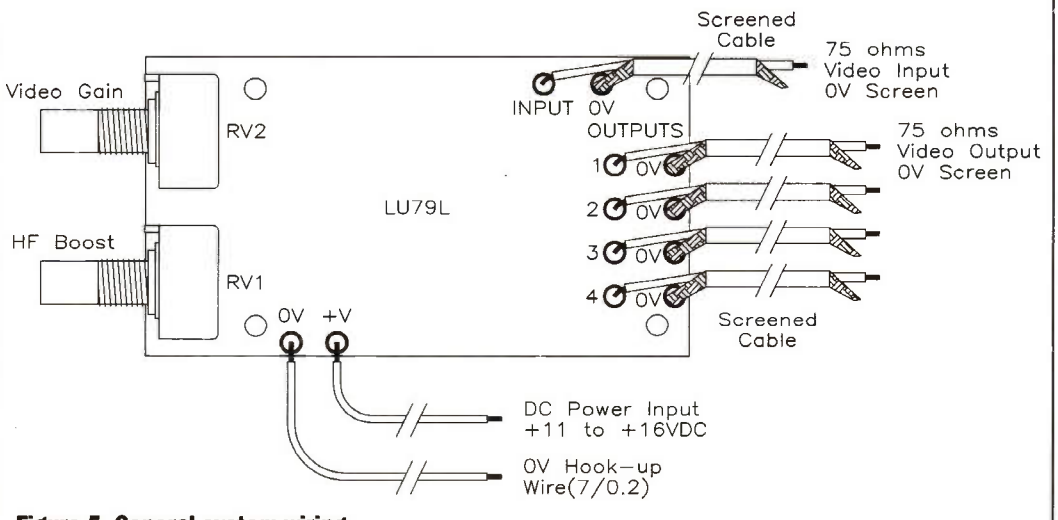

Figure 5. General system wiring.

Standard Mode:
Where four 75Ω outputs are available:
1. Fit R11.
2. Install IC1 and secure it using the M3 hardware.

High Drive Current Mode:
Where one high drive 10Ω output is available.
1. Fit a wire link at the R11 position (output 4).
2. Install IC1 on a TO126 twisted vane heatsink (JX21X) and secure it using the M3 hardware.
3. Place the remaining 75Ω resistor (R11) in series with the video input.

The final decision you must now make is the type of controls you want for the video gain and HF boost adjustment. Supplied in the kit are two miniature carbon track potentiometers, RV1 4k7 (JM70M)

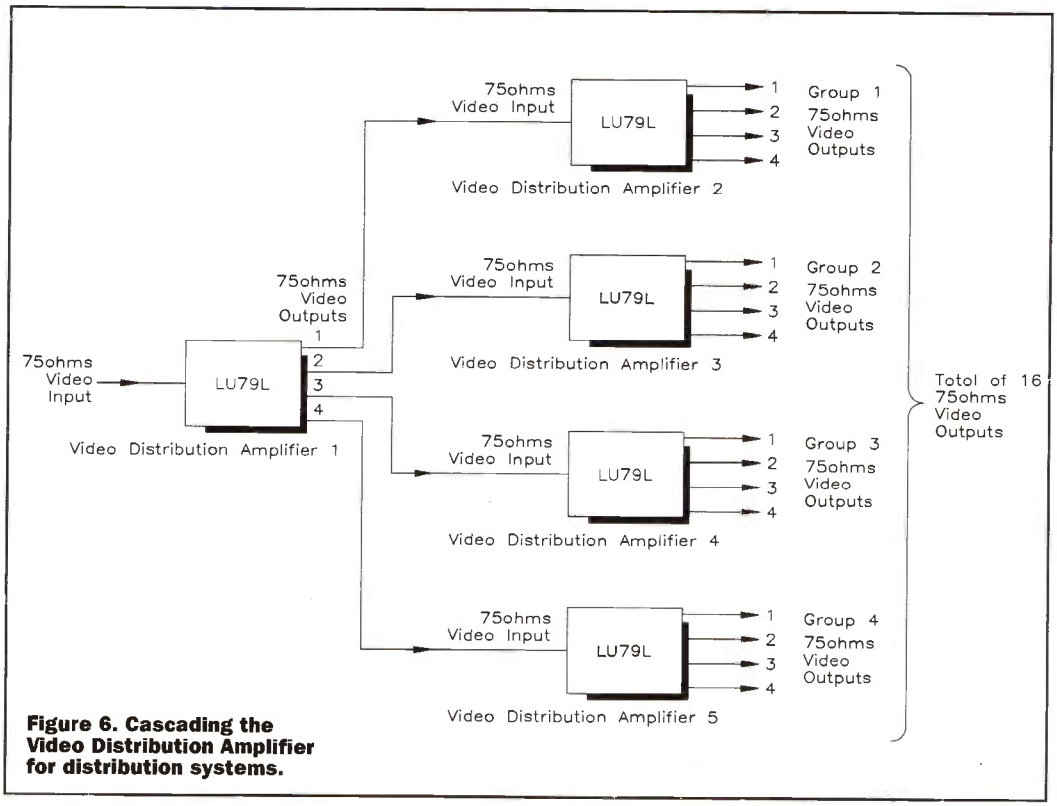

Figure 6. Cascading the Video Distribution Amplifier for distribution systems.

and RV2 1k (JM69A). These are suitable for front panel mounting in a box with control knobs fitted, see optional parts list. However, if in your particular application you do not intend to make frequent adjustments, or wish the user not to have access to these controls you can fit the pre-set type resistors. The PCB has been designed to accept three types of pre-set resistor, which are NOT included in the kit.

1. Sub-miniature fully enclosed carbon vertical mounting, RV1 4k7 (UH15R) and RV2 1k (UH13P).
2. Sub-miniature fully enclosed carbon horizontal mounting, RV1 4k7 (UH02C) and RV2 1k (UH00A).
3. Cermet pre-set horizontal mounting, RV1 5k (WR41U) and RV2 1k (WR40T).

As there is quite a variety of plugs and sockets that are used on video equipment, the constructor is referred to the Connectors and Cables section of the current Maplin Catalogue for a wide range of suitable items. However it is important to use screened cable to provide proper impedance matching and to avoid the pick-up of interference. The Peritel audio/video connector is now in common use on recent and new televisions and video recorders. Figure 4 shows the basic pin-out for the Peritel connector, making reference to the composite video, audio, and function switching pins only.

Figure 5 gives details of the general system wiring, whilst Figure 6 shows how several Video Distribution Amplifiers may be cascaded to provide more than four outputs, ideal for a large video distribution system.

The audio signals from the master television receiver or video recorder output may be connected directly to the slave VCR(s) as the Video Distribution Amplifier does not cater for audio signals. Direct connection will usually be found to be acceptable, and it is unlikely that excessive attenuation of the audio signals will occur since the audio inputs on VCRs are nearly always terminated into a high impedance. However it is important to use screened cable to prevent pick-up of hum and noises.

ELECTRONICS

PROJECT PARTS LIST

RESISTORS: All 0·6W 1% Metal film (Unless specified)

R1,2	Min Res 470Ω	2	(M470R)
R3,8,9,10,11	Min Res 75Ω	5	(M75R)
R4,7	Min Res 1k	2	(M1K)
R5,6	Min Res 220Ω	2	(M220R)
RV1	Min Pot Lin 4k7	1	(JM70M)
RV2	Min Pot Lin 1k	1	(JM69A)

CAPACITORS

C1,3,8	GenElect 470µF 16V	3	(AT43W)
C2,4,5,9	Minidisc 100nF 16V	4	(YR75S)
C6	GenElect 100µF 16V	1	(AT40T)
C7	Ceramic 470pF	1	(WX64U)

SEMICONDUCTORS

D1	1N4001	1	(QL73Q)
IC1	EL2099CT	1	(AY89W)

MISCELLANEOUS

	Pin 2145	12 pins	(FL24B)
	M3 10mm Steel Screw	1	(JY22Y)
	M3 Steel Nut	1	(JD61R)
	M3 SpringWash	1	(JD96E)
	Video Amplifier PCB	1	(GH72P)
	Video Amplifier Leaflet	1	(XZ38R)
	Constructors' Guide	1	(XH79L)

OPTIONAL (Not in Kit)

	Vaned Heatsink TO126	1	(JX21X)
	Vrt Encl Preset 4k7	1	(UH15R)
	Vrt Encl Preset 1k	1	(UH13P)
	Hor Encl Preset 4k7	1	(UH02C)
	Hor Encl Preset 1k	1	(UH00A)
	Cermet 5k	1	(WR41U)
	Cermet 1k	1	(WR40T)
	Chassis Phono Socket	As Req.	(YW06G)
	BNC Chassis Socket	As Req.	(FE31J)
	75Ω Cable	As Req.	(XS52G)
	BNC-to-BNC Video Lead	As Req.	(RK84F)
	Phono-to-Phono Video Lead	As Req.	(CN49D)
	Phono-to-BNC Video Lead	As Req.	(RK87U)
	ABS Box MB2	1	(LH21X)
	Knob RN15 Blue	As Req.	(FE74R)
	Knob RN15 Red	As Req.	(FE76H)
	AC Adaptor Regulated	1	(YB23A)

The Maplin 'Get-You-Working' Service is available for this project, see Constructors' Guide or current Maplin Catalogue for details.

The above items (excluding Optional) are available as a kit.

Order As LU79L (Video Distribution Amplifier Kit) Price £14.99

Please Note: Where 'package' quantities are stated in the Parts List (e.g. packet, strip, reel, etc.), the exact quantity required to build the project will be supplied in the kit.

The following new items (which are included in the kit) are also available separately, but are not shown in the 1997 Maplin Catalogue.

Video Amplifier PCB **Order As GH72P Price £2.69**

Diary Dates

Every possible effort has been made to ensure that information presented here is correct prior to publication. To avoid disappointment due to late changes or amendments, please contact event organisations to confirm details.

February 1997

10 February. Kitchen Table Metal Bashing, Stratford-upon-Avon & District Radio Society, Stratford-upon-Avon, Tel: (01789) 740073.

11 February. Test Equipment/Check Your Rigs, Bromsgrove Amateur Radio Society. Tel: (01527) 542266.

16 February. 5th Northern Cross Radio Rally at Thornes Park Athletics Stadium, Wakefield. Details from Pete Smith G0BQB, Tel: (01924) 379680.

19 to 20 February. Software in Accounting and Finance, Earls Court, London. Tel: (0181) 541 5040.

24 February. Test Equipment, Bring Your Equipment for Checking, Stratford-upon-Avon & District Radio Society, Stratford-upon-Avon, Tel: (01789) 740073.

25 February. Talk – G5RV's, etc. by Jeff G4OHJ, Bromsgrove Amateur Radio Society, Tel: (01527) 542266.

25 to 28 February. Windows Show – Computing, Olympia, London. Tel: (01256) 381456.

March 1997

4 to 6 March. ICAT '97 – Computer Integrated Technology Design & Manufacturing Automation Event, NEC Birmingham. Tel: (0171) 388 2430.

6 to 9 March. Innovation and Inventions Fair, Barbican Exhibition Centre, London, Tel: (01202) 762252.

10 March. Antennas, Stratford-upon-Avon & District Radio Society, Stratford-upon-Avon. Tel: (01789) 740073.

11 March. Night on the Air/Construction, Bromsgrove Amateur Radio Society, Tel: (01527) 542266.

12 to 14 March. The Television Show – The Film and Video Production, Business Design Centre, London. Tel: (0171) 344 3888.

18 to 20 March. NEPCON Electronics Exhibition, NEC, Birmingham. Tel: (0181) 910 7910.

18 to 20 March. Semiconductor Solutions Exhibition, NEC, Birmingham. Tel: (0181) 910 7910.

23 to 25 March. Electrical Retailing Show, NEC, Birmingham. Tel: (01737) 768611.

24 March. Surplus Equipment Sale, Stratford-upon-Avon & District Radio Society, Stratford-upon-Avon. Tel: (01789) 740073.

25 March. Talk – C. M. Howes Communications Kits by Dave Howes G4 KQH, Bromsgrove Amateur Radio Society, Tel: (01527) 542266.

25 to 27 March. Institute of Physics' Annual Congress, University of Leeds, Tel: (0171) 4704500.

25 to 27 March. Sixth International Developments in Power System Protection Conference, University of Nottingham, Nottingham. Tel: (0171) 344 5478.

April 1997

8 April. Construction/Night on the Air, Bromsgrove Amateur Radio Society. Tel: (01527) 542266.

8 to 10 April. Environmental Technology, NEC, Birmingham. Tel: (0181) 910 7910.

14 April. Annual General Meeting, Stratford-upon-Avon & District Radio Society, Stratford-upon-Avon. Tel: (01789) 740073.

Please send details of events for inclusion in 'Diary Dates' to: News Editor, Electronics and Beyond, P.O. Box 777, Rayleigh, Essex SS6 8LU or e-mail to swaddington@cix.compulink.co.uk.

What's On?

Winners of British Computer Society IT Awards Selected

The British Computer Society (BCS), the UK professional body for the computing and information technology (IT) industries, has announced the three Winners of its 1996 IT Awards: Microcosm Plus by Multicosm; INCA (Inter-Network Call Accounting) by British Telecom; and Sibelius 7 by Sibelius Software.

These winning projects were announced and presented with their trophies at the Winners Event held at the Cafe Royal, London at the end of last year.

Microcosm Plus, by Southampton-based Multicosm, is an IT solution which allows access to existing data archives and improves the process of data retrieval.

The key element behind this project is a radical rethink of hypermedia information systems. These systems present information in a layered fashion that lets a user delve down to whatever level of detail they require. This is done by following 'links' between pieces of information. Existing hypermedia systems require the information to be specially prepared for this use – with the 'links' permanently embedded within it.

Microcosm frees multimedia authors from these constraints in two major ways. It allows the use of existing computer-based material without change, and it holds the necessary links separate from the material, creating the first ever Open Hypertext system.

Inter-Network Call Accounting (INCA) is a tracking system to bill other operators for their BT usage by British Telecom, London.

With the growth in the number of licensed telecom providers, the number of telephone calls using the networks of more than one service provider is growing very rapidly. The customer making the call is billed for the whole call by the operator on whose network it originated. The second operator who carried the call then claims back the cost for the subsequent use of their network.

This project gathers the detailed information to allow BT to account accurately for these inter network calls. It runs on a massive distributed Unix system of 50 Hewlett Packard machines delivering 6,000MIPS and using 5,600M-byte of memory, 130G-byte of RAID disc space, and 1,000G-byte of optical disc storage. This power lets BT process over 1 billion calls per month. It has already identified millions of pounds of previously under-declared payments.

Finally, Sibelius 7, as an expert system for music, incorporates many hundreds of rules of music notation and engraving to produce publication quality output, by Sibelius Software, Cambridge.

Sibelius 7 is a WYSIWYG music processor – it behaves with notes and staves as a word processor does with letters and paragraphs. It is extremely easy to learn to use. Music can be input by positioning notes on the screen from a keyboard or mouse, or by playing it on a MIDI keyboard. Keyboard input is directly converted into music notation.

Once stored internally, the music is displayed and edited by the same kinds of actions as word processors use: copying, cutting and pasting, or moving notes and other markings with the mouse.

Using a soundcard in the computer, Sibelius 7 can also play the score as it is being worked on. It has already 'performed' in its own right, premiering two piano studies by the Hungarian composer, Gyrgy Ligeti, at a London concert.

1996 is the 24th year of the BCS IT Awards which makes them not only the most prestigious awards but also the longest running. The three special Awards are made to the Medal Winners, who are chosen by an independent panel who seek projects which have made an outstanding contribution to IT. The awards are sponsored this year by BT, Bull, DTI, Energis, Fraser Williams, IBM, ICL, Interskill, Logica, Oracle, The Post Office and Tandem.

For further details, check: **http://www.bcs.org.uk**, **http://www.microcosm.com** and **http://www.bt.com**.

Network Computing to Redefine Computing Landscape

At a major conference of European business leaders in London last month, the Minister for Industry, the Rt. Hon. Greg Knight MP, called for businesses to move faster to exploit network computing to compete effectively in the information age.

Speaking at the IBM-organised CEO Forum, 'Network Computing: The Power & The Promise', Knight said, "The winners in the new global marketplace will be those firms which respond to the challenge of new technologies imaginatively, using them as a spur to rethinking how they work, both within their own organisations and in their relations with their customers and suppliers". He explained how future wealth creation would be driven by access to, and effective use of, the information needed to support business processes.

Knight's view was endorsed by Dr Sanjaya Addanki, vice president Network Computing Solutions, IBM EMEA, also speaking at the conference. "Network computing will create winners and losers in all industries – it is vital that CEOs understand and act upon the opportunity which it presents to them and their business. The difference between acting and not acting is business survival. All businesses of all sizes in Europe and beyond will be affected by the power of network computing", said Addanki.

He added that the network computing model creates a global marketplace and breaks down traditional industry barriers. "To thrive in this commercial environment, organisations must move quickly and slickly and be prepared to alter their traditional processes and cultures to a significant degree."

Addanki drew attention to the pace of change in the commercial marketplace, illustrating this by the fact that of the 100 US companies featured in the Fortune 100 in 1984, only 26% remained in 1994. He stressed that the impact of network computing would accelerate this change yet further.

In his speech, the minister also drew attention to the findings of a DTI international benchmarking analysis on the UK's position in the information age. He noted that while the UK is well placed – second only to the US among major economies – improvements can be made, particularly if public and private sector combine to create a true information society. "Government and the private sector must continue to work together in stressing the real business benefits which are now available to all UK firms in all sectors through the adoption of new technologies, and in helping companies come to terms with the changes in business practices that they imply", he said.

Knight also highlighted the role of the DTI's Information Society Initiative (ISI) – a suite of activities designed to help small to medium size enterprises (SMEs) get the most from networked technologies – in providing neutral advice and guidance to SMEs in ways easily accessible to them, particularly through the use of local and sectoral support bodies and with the support of business partners such as IBM.

The minister closed by discussing the impact network computing was having on Government itself and the possibilities offered by IT for changing and improving the provision of services to the public: "And, just as business is having to reconsider the way it works, so Government itself needs to adapt, in ways set out in the Green Paper published last week on the electronic delivery of government services".

Details of the DTI Information Society Initiative: Programme for Business can be obtained by calling the ISI Infoline on (0345) 15 2000, by e-mail at **info@isi.gov.uk** or by visiting the web site at **http://www.isi.gov.uk**.

The Government Green Paper 'government.direct – Prospectus for the Electronic Delivery of Government Services' is available from HMSO bookshops on (0171) 873 9090, priced £6.85.

The IBM Network Computing Solutions Web site is at **http://www.europe.ibm.com/osc/uk**.

Lightning

PART 1

IT'S NATURE

by Greg Grant

Two hundred and fifty years ago, Benjamin Franklin described his experiments with atmospheric electricity. His work resulted in the production of the Lightning Rod, an early victory of science over a natural phenomenon.

Experiments carried out by Benjamin Franklin on the study of atmospheric electricity has resulted in a better understanding of the nature of lightning. It has also led to the creation of the Lightning Protection industry, a vital safeguard in our electronically run world.

The Beginnings

Some 2,000 of them happen at any one time and they cannot be predicted. In their brief lives, they travel at 87,000 miles/second, burning the air around them and killing more people than floods, tornados or hurricanes. They are, of course, lightning bolts.

Death and Lightning in the UK

A century ago, there were, on average, 35 deaths a year from lightning in the UK. Since 1960, however, this figure has remained at five such fatalities per annum

The main reason for this is that far fewer people now live and work out in the countryside and so there are fewer individulas exposed to lightning. Towns, on the whole, are safe places to be where lightning is concerned.

Moreover, there is a greater awareness of the dangers of lightning now than in the past, thanks in the main to better scientific education and improved weather forecasting.

Figure 1. The original Boys camera.

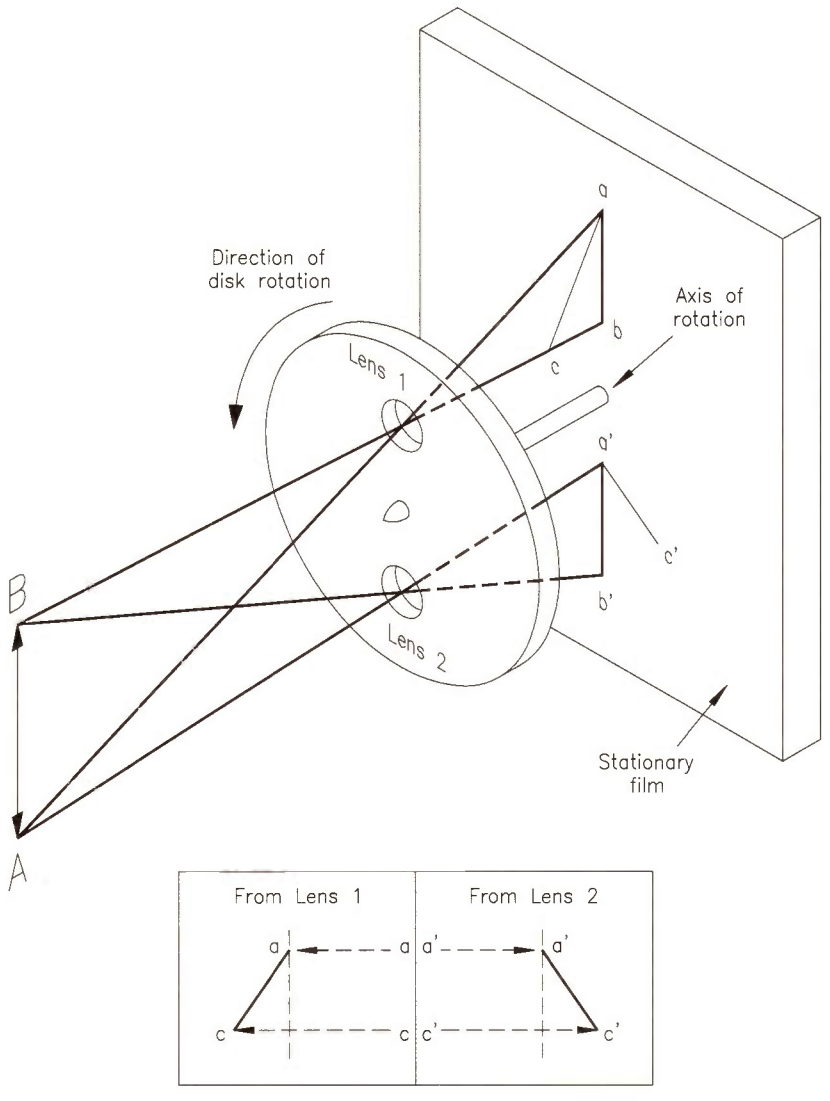

Lightning is as old as the Earth. When, for example, it strikes dry sand, the heat generated melts and vitrifies the silica, forming what geologists call Fulgurites. In 1966, two geophysicists, W. B. Harland and J. L. Hacker, discovered fulgurites in one of their geological samples, which turned out to be more than 250 million years old!

Lightning has made a deeper impression on man than almost any other phenomenon except darkness. From the Roll Seals of the Akkadians dating from 2,200 BC to the myriad amphorae of the Greeks 2,000 years later, lightning bolts flash and strike at a variety of targets, real and imagined.

The Romans were among the earliest of peoples to notice that rain fell from a thundercloud approximately four minutes after a lightning discharge and the philosopher, Seneca, in his 'Naturales Quaestiones', divided lightning into three distinct types. To begin with, there was fast, penetrating kind; then the destructive variety, and finally, the igniting type.

By medieval times, Europeans generally were beginning to think of protection from lightning. This usually took the form of the ringing of church bells, in an attempt to disperse the thunder. This, of course, had but one result: the electrocution of a great many bellringers.

What was needed was an investigation into the nature of lightning and its connection with thunder. One of the earliest of such enquirers was Francis Hauksbee, a former curator of the Royal Society, and throughout the mid forties of the 18th century, Jacques Nollet in France, J. H. Winkler in Germany and John Freke in Britain published papers in which they advanced the concept of lightning and electricity being essentially similar. In 1747, however, theory received a boost from an unexpected quarter; the New World.

Understanding and Instrumentation

Benjamin Franklin was an immensely practical man. He discovered that a pointed conductor could draw off electric charge from a charged body, a discovery that would become the basis for the Lightning Rod. Three years later, using a kite whose conducting string was terminated in an insulating strip of silk, Franklin collected electricity from thunder clouds.

He also strapped an iron rod to his house chimney and suspended a brass ball close to it, to chime on a set of balls when lightning struck. In the following year, he compared atmospheric electricity to that produced by rubbing and became the first investigator to establish that the charge on a thunder cloud is almost always negative.

On a visit to England in 1769, Franklin specified lightning rods for St. Paul's Cathedral. Three years later, these conductors, consisting of iron bars, four inches broad and half an inch thick, became red hot during a thunderstorm. The reason, of course, was the high electrical resistance and so later, copper came to be used for lightning conductors, an application for which it has been virtually unchallenged ever since.

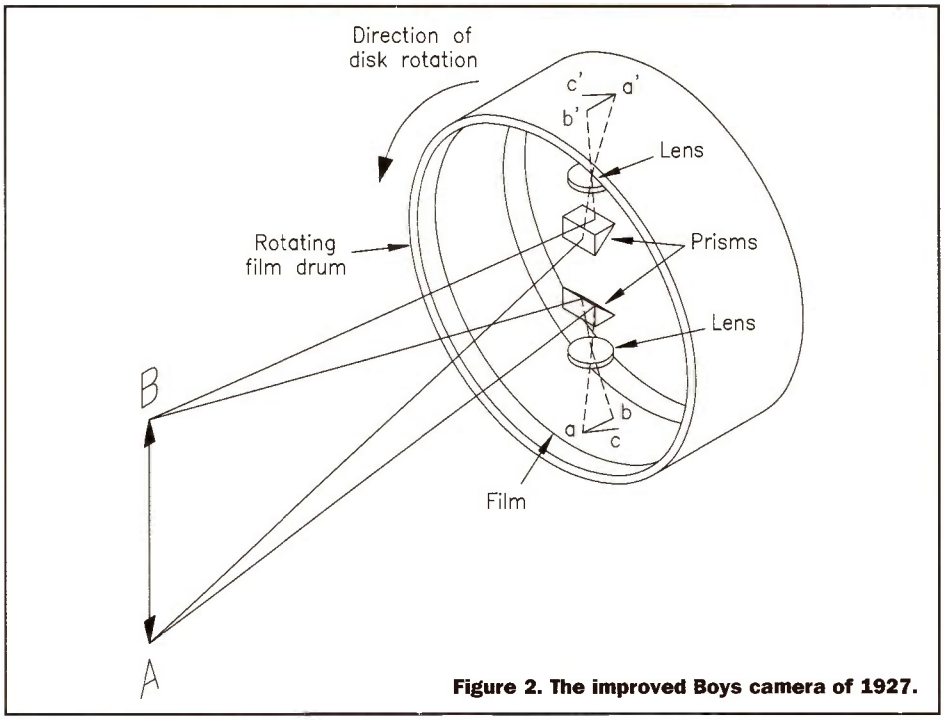

Figure 2. The improved Boys camera of 1927.

Other early methods of detecting lightning's electrical effect was by the sparks it produced or the particles of dust the conductor attracted. In 1778, the German physicist, satirical writer and scientific editor, Georg Lichtenberg, told of an experiment in which a capacitor was discharged across a spark gap in which was placed an insulating plate covered with powder. One electrode of the spark gap was in contact with the insulating plate. It was found that the discharge caused the powder to be arranged in unusual patterns.

These Lichtenberg figures, as they came to be called, turned out to have different characteristics for different polarities of the contact electrode. This was not simply the earliest demonstration of what would, in our own time, be re-invented as electrostatic copying, but also now one of many techniques that would provide the first practical instrument for measuring lightning voltages.

Throughout most of the 19th century, the principle technique for studying lightning was Lightning Spectroscopy. The lightning spectrum was found to be a "more or less bright continuous spectrum crossed by numerous bright lines, so numerous indeed as to perplex one as to their identity", wrote the distinguished astronomer, Sir John Herschel, in 1868.

Twelve years later, matters could hardly be said to have advanced greatly. Sir Arthur Schuster, Professor of Applied Mathematics and Physics at Manchester and co-inventor of the Schuster-Smith Magnetometer, noted that everyone who had studied lightning spectra agreed in having seen the line-spectrum of nitrogen. Most of them have seen, in addition to this, sometimes a continuous spectrum, sometimes a band spectrum, the chemical origin of which is unknown.

Another important British contributor to lightning research, as indeed, he was to physics generally, was Lord Kelvin, who published six papers on the subject between 1859 and 1862. The first physicist to observe changes in potential gradient caused by lightning bolts, he was also one of the earliest advocates of photography in lightning studies.

By the end of the 1880s, in fact, both Lichtenberg Figures and photography were beginning to influence lightning research. In 1888, J. Brown in Britain and E. T. Trouvelot in France found that if the emulsion side of a photographic plate were placed in contact with an electrode rather than Lichtenberg's insulating plate, figures similar to Lichtenberg's appeared on the developed photograph.

In the following year, another British investigator, the determined H. H. Hoffert, began photographing lightning on a moving film plate. Eight years later, the German physicist, Pockels, began the measurement of lightning currents, which led to the magnetic link and by 1902, another German physicist, Walther, also began to use photography in lightning research.

Undoubtedly, the most indefatigable of early 20th century lightning researchers was the Scottish meteorological physicist, C. T. R. Wilson. The inventor of both the Universal Portable Electrometer and the Capillary Electrometer, he was constantly observing the atmosphere, noting its myriad changes of mood.

He was also a gifted developer of measuring techniques and devices for recording his observations, an ability that would, in 1927, bring him the ultimate scientific accolade: a share in the Nobel Prize for Physics.

At the turn of the century, another Briton decided to record the progress of a lightning bolt on film. Charles Vernon Boys used a pair of identical lenses, specially selected for stereoscopic photography. They were mounted on a disk which could be rotated by hand through gearing at any desired speed. What would become an essential tool in lightning research, the Boys Camera, had made its first appearance.

This device, illustrated in Figure 1, consisted of two lenses rotating at high speed in opposite linear directions about a common axis. Therefore, any object falling from a height, photographed by this type of camera, would have traces of its descent

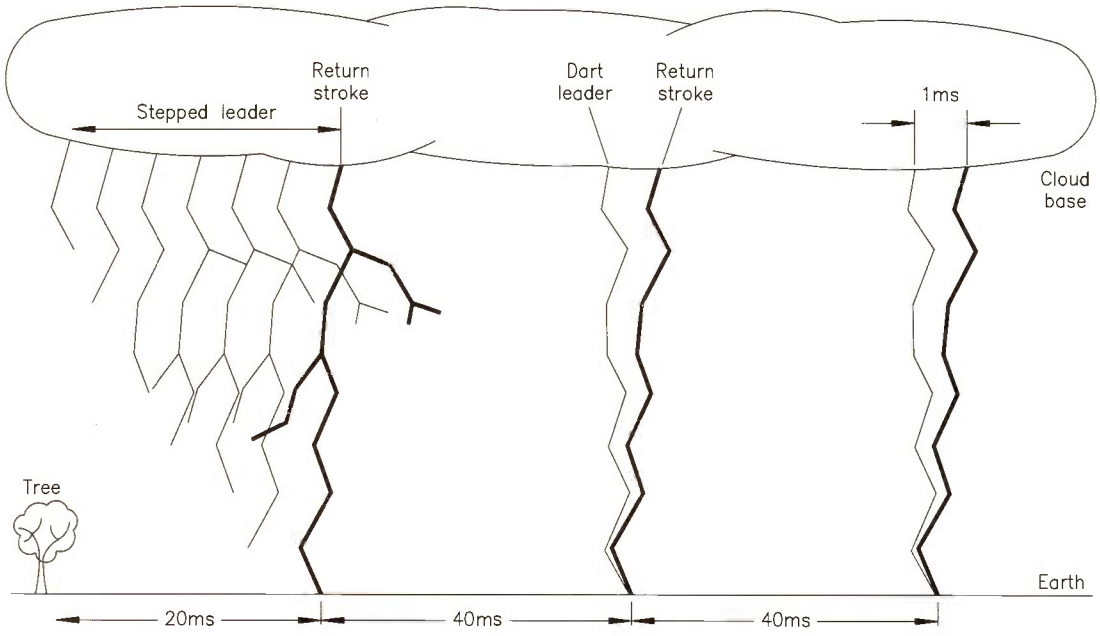

Figure 3. An arrangement for the automatic recording of Lightning Flashes.

deflected sideways, in opposite directions, by the two lenses. Consequently, using image superposition techniques, the object's speed and direction could be determined.

In Figure 1(b), the time taken for the propagation of luminosity between A and B is found from the equation:

$$(cc^1 - aa^1)/2v$$

Where **v** is the velocity of each lens.

Educated at Cambridge, Boys was a brilliant experimenter, famed for inventing sensitive recording instruments, among which was a radiomicrometer for measuring radiant heat. His camera, which he carried with him for several years in England without finding any opportunity to use it, made for a far better understanding of the lightning discharge.

When, in 1928, such an opportunity did arise, he had already improved upon the original, his new device being a quite radical departure, as shown in Figure 2.

In this version, Boys fixed the lenses and made the photographic film rotate instead, which made for easier interpretation of the results. In this case, as the luminosity progresses from A to B, two images are created: that of **ab** (a^1b^1) when the drum is at rest and **ac** (a^1c^1) in the course of rotation.

Consequently, when the new camera was taken to South Africa in 1933 by the British physicist, Basil Schonland, he and his co-workers speedily obtained excellent results. Schonland demonstrated the general nature of propagation of the discharge from a cloud to earth, and the subsequent high intensity return streamer.

Another important investigative tool in lightning studies was the cathode ray tube. First used in 1924 by Professor Harold Norinder of Sweden's Uppsala University, to record the atmospheric over-voltages on transmission lines, it was soon employed almost everywhere in lightning research, not least, by Britain's National Physical Laboratory.

It was in this period also, that J. F. Peters introduced the Klydonograph, an instrument designed to measure voltage by using Lichtenberg Figures, whose properties had been elucidated by M. Toepler in 1917.

The radius of the Lichtenberg Figure is a function of the MAXIMUM value of the impressed voltage. Its diameter indicates the applied voltage's amplitude and its pattern the voltage's polarity. Figures produced by negative voltages are smaller and of a different character to those produced by positive voltages. Even impressed voltages, whose time duration is only a fraction of a microsecond (μs), will still produce Lichtenberg Figures.

The Klydonograph can measure voltages from 2 to 18kV, a range that can be extended by the use of potential dividers. It is also very easy to install.

Another measuring device used in lightning research is the Surge Voltage Recorder. This comprises two Klydonograph recording elements in parallel, so that for a given applied voltage, both positive and negative Lichtenberg Figures are recorded. The device's accuracy when measuring peak voltage is around ±25%.

Lichtenberg Figures also provide a basis for lightning current measurement. If, for example, the peak voltage across a known impedance is found from the radius of a Lichtenberg Figure, the corresponding current can be found from dividing the voltage by the impedance. This is the basis of the Lightning Stroke Recorder.

Whilst Lichtenberg Figures have the advantage of producing good definition images from the shortest of voltage impulses, their major disadvantage is that measuring errors can exceed ±30%!

By 1936, the Swiss meteorologist, Professor Karl Berger, who had earlier produced vital information on the wave shape of a lightning current, demonstrated that on power lines of 60kV and over, flashovers were caused entirely by direct lightning strikes. Consequently, lightning research became interested in recording lightning currents, particularly at noted, specific high points such as San Salvatore in Switzerland, or at the top of the Empire State building in New York.

In 1940, two Westinghouse Corporation power engineers, C. F. Wagner and G. D. McCann, developed the Fulchronograph, a word they derived from the Latin Fulmen, meaning Lightning and the Greek words Chrono, meaning Time and Graph, meaning To write or to draw. The device was, in essence, a rotating disk on whose circumference the two engineers fitted a large number of steel laminations, which were subjected to the magnetic field of the lightning current being recorded.

Their work was driven by the requirement for additional statistical knowledge of lightning currents, both in the Stroke and in stricken equipment, particularly with respect to the wave shape for periods of time in excess of 50μs, since this would largely determine the design and testing procedure for lightning arresters. The Fulchronograph, in short, was an attempt to establish the time variation of lightning current and the best result obtained was resolution of 30μs.

Another of Wagner and McCann's innovations was the use of a Surge Front Recorder, which consisted of three inductive and resistive circuits with different time constants, connected across a coil coupled to the main, lightning-induced current.

Magnetic links, close to each circuit inductance, give the currents induced and so the *average* rate of current increase can be determined. In 1941, Wagner and McCann recorded peak currents of 160,000 and 220,000A, the time taken to reach such staggering values varying from 1 to 19μs, the average values being around 6μs. The subsequent fall to half value after reaching Peak took between 7 and 115μs, the average fall time being around 24μs.

The Klydonograph was further developed, firstly as a ciné Klydonograph and then as a Teinograph, which had similar characteristics, by the American meteorologist, S. B. Griscomb, in 1960. However, both instruments were

plagued by errors every bit as serious as those that beset the original device.

The arrangement in Figure 4 automatically records stroke wave inputs striking the 60m mast. The gap-core transformer's frequency response is 1Hz to 10MHz, the droop is 0·02%ms^{-1} and its sensitivity 1·5VkA^{-1}. Oscilloscope A, a dual-beam model, provides records of individual strokes for both negative and positive currents, along a 100μs timebase. Unit B, a single-beam device, records the number of strokes and the total flash duration, along a timebase of 1s.

Present State of Knowledge

So, what causes lightning? Atmospheric instability basically, the strike only becoming visible when it hits the lower part of a cloud and rushes to earth in a discharge termed a Leader Strike. Since most leaders are released from negatively charged cloud centres, they are similarly charged.

There are two types of such charge, firstly, the Stepped Leader, which approaches the earth in discrete steps some 20m long, which appear to lengthen as it nears the ground. Secondly, there is the Dart Leader, which flashes more or less directly to ground, as shown in Figure 3.

As large raindrops and hailstones collide with smaller water and ice particles, electrical charges build up, the rising particles becoming positively charged, the falling ones negatively charged. When a potential charge equivalent to a megavolt (MV) or thereabouts has been established, electrons pour down towards the earth, ionising the air around them, forming a 'Stepped Leader' path to ground. Concomitantly, as the large negative charges approach the earth, they induce positive charges to move upwards, lightning flowing up and down this newly created conduction 'channel.'

Thunder results from lightning bolts heating the air around them to some 15,000°C as they move up and down the conduction 'channel.' Nevertheless, none of the foregoing explains why lightning is forked. This problem, whilst still under investigation by meteorological physicists at the Lebedev Institute of Physics in Moscow and the Los Alamos Laboratory in New Mexico is, however, close to solution. Both laboratories have advanced a theory that goes some way to explain why lightning forks, why it generates X-rays and even why it takes place at all.

Briefly, a lightning strike is started when a cosmic ray enters the earth's atmosphere and collides with an air molecule, ejecting a fast-moving electron. If the cosmic ray passes enough energy to the electron, the electric field strength in an average thundercloud is more than sufficient to keep the electron on the move as it hits and breaks up air molecules. Each collision results in an avalanche of high energy electrons, each of which have been accelerated by the electric field, leaving a stream of ionised air molecules behind them.

The result of this, after the avalanche has stormed downwards for around 100m, is a pool of electrically charged particles with its attendant electric field. If, at this juncture, another cosmic ray impact sends another fast-moving electron through the charged particle pool already created, it generates ANOTHER avalanche and ionised trail.

This last, although linked to the first one, heads off in a different direction. Thus, a step-by-step path leads rapidly earthwards until it is near enough for a streamer to rise up and, literally, act like a relay contact and close the circuit. All of which, of course, is bad news indeed for the electricity and communications industries and such public utilities as the National Air Traffic Service, the Emergency Services and the Armed Forces. How such bodies take precautions against this natural hazard is the subject of the second part of this article.

References

Dunsheath, Percy (1962): *A History of Electrical Engineering*. Faber & Faber, London. Page 177.

Webster-Smith, B. (1965): *Sixty Centuries of Copper*. Hutchinson, London. Page 65.

Uman, Morton A. (1969): *Lightning*. McGraw-Hill, New York. Page 116.

Herschel, John (1868): *On The Lightning Spectrum*. Proc. Roy. Soc. (London) 15:61-62.

Schuster, Sir Arthur (1880): *On Spectra of Lightning*. Proc. Phys. Soc. (London) 3: 46-52.

Boys, C. V. (1926): *Progressive Lightning*. Nature, 118: 749-750.

Chalmers, J. Allan (1967): *Atmospheric Electricity*. 2nd Edition. Pergamon Press, Oxford. Page 351.

Wagner C. F. and McCann G. D. (1940): *New Instruments for Recording Lightning Currents*. AIEE Transactions 40-90. Page 1,062.

Wilson, John (November, 1993): *Why Lightning is Forked*. Article in '*Electronics World + Wireless World*'. Page 890.

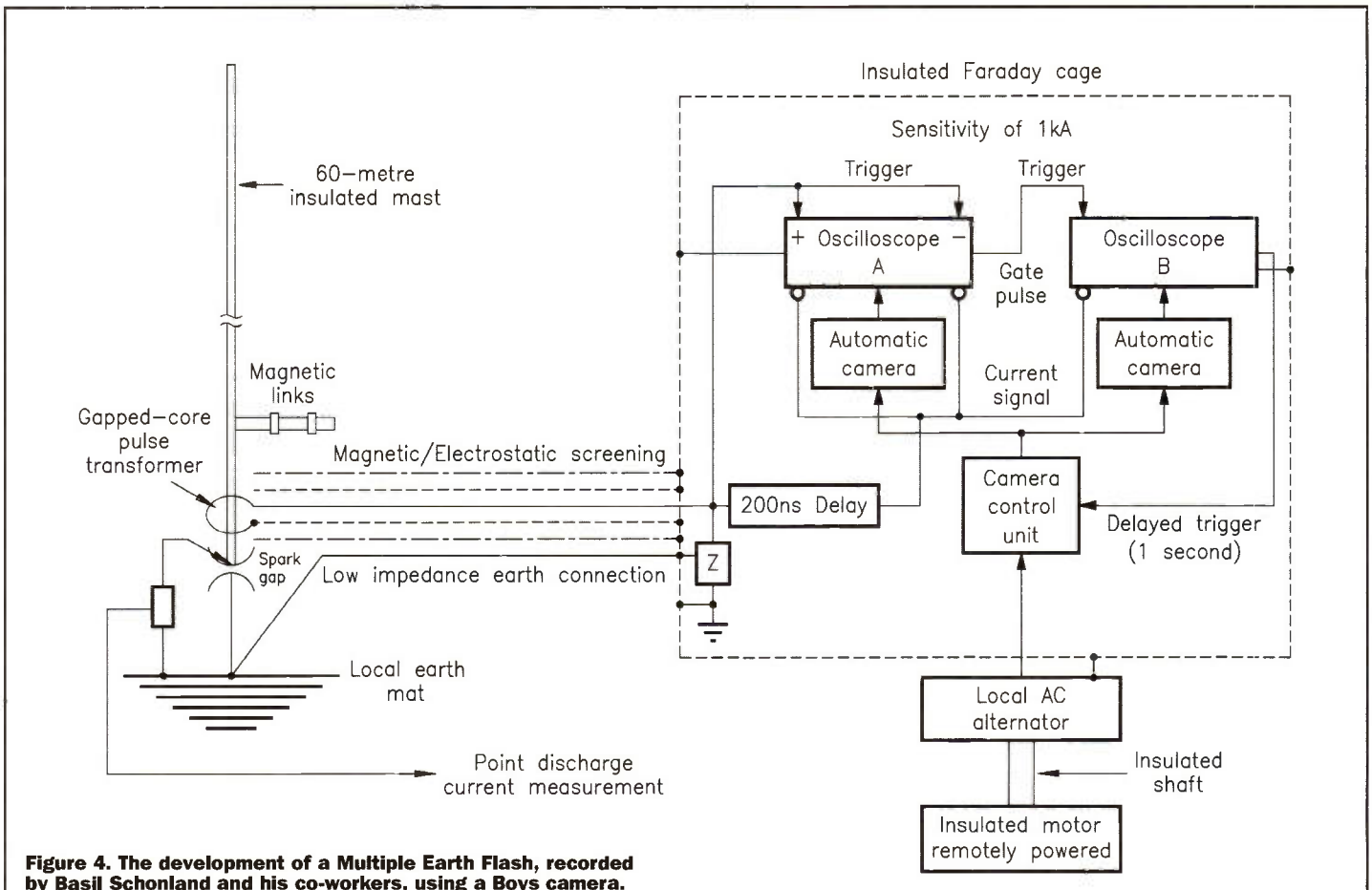

Figure 4. The development of a Multiple Earth Flash, recorded by Basil Schonland and his co-workers, using a Boys camera.

PROJECT

Continuity TESTER

Design by Robert Penfold
Text by Robert Penfold & Alan Williamson

A continuity tester is a very useful gadget around the home, workshop and on stage – it is invaluable for testing fuses, jack leads, speakers, semiconductor junctions, printed circuit boards, power transistor/heatsink insulation and a multitude of other potential sites of trouble (pun not intended). Like most testers, this design gives an audio indication of continuity, and has the advantage of two modes of operation, giving increased versatility for printed circuit board checking.

PROJECT RATING 1

Kit Available
Order as JA13P
Price £19.99

A problem that is often encountered when testing for short circuits on component boards is that a semiconductor junction (which can be part of a transistor, integrated circuit, or a diode) connected across tracks to be tested can give a false alarm. When forward biased there is a voltage drop of about 0·6 volts across the junction, but this drop is not normally sufficient to prevent the tester from operating and indicating continuity. Though false alarms of this type can often be checked by reversing the test probes (ineffective in circuits where there are two junctions connected 'back to back') this tester can operate such that continuity will only be indicated if the voltage drop across the test probe is less than about 0·5 volts, avoiding misleading results due to forward biased semiconductor junctions.

The Circuit

The circuit diagram of the continuity tester appears in Figure 1; and is basically just an audio oscillator feeding a loudspeaker.

IC1 is an audio power amplifier device, which is made to oscillate at a frequency of several hundred Hertz by applying positive feedback through R3, C1 and R1. R2 reduces the amount of feedback somewhat, and prevents the oscillations from becoming unstable, while C2 couples the output signal to a high impedance loudspeaker.

With S1 in the 'off' (open circuit) position, the unit can be used as a simple continuity tester for leads, fuses, semiconductors, etc., and shorting the two test probes together will connect the supply to the circuit producing an audio tone. The LED indicator LD1 will also illuminate, giving a visual indication of continuity. When using the unit for checking semiconductors, connecting the junction one way round (N junction to RED probe, P junction to Black probe) will result in it blocking the supply and preventing oscillation, whilst connecting it the other way round produces conduction and an audio tone is therefore output from the unit. The device under test is open circuit if oscillation cannot be obtained, or short circuit if both methods of connection produce oscillation.

FEATURES

Can discriminate between semiconductor junctions and 'true' short-circuits

Audible indication of continuity

Compact, lightweight, and portable

APPLICATIONS

Tracking Faults

Continuity Testing

Testing Components

SPECIFICATION OF PROTOTYPE

All specifications of prototype made at an operating voltage of 9V.

Quiescent current:	(S1 open, Probes open circuit)	0mA
	(S1 closed, Probes open circuit)	8mA
	(Probes short circuit)	12mA
Maximum resistance for continuity indication:	(S1 open)	200Ω
	(S1 closed)	60Ω
Maximum Probe current:		12mA
Maximum Probe voltage:		8·5V
Minimum semiconductor junction voltage:		0·6V

Important Note:
This project is a general-purpose test instrument for checking continuity. It is *not* designed to test earth continuity, earth loop insulation on 230V AC mains installations systems, or equipment for compliance with British IEE Wiring Regulations, nor on installations, systems or equipment for this or any other mains voltage for compliance with any other specifications or regulations. This project contains no internal protection circuit and therefore must not be connected to any live or energised equipment.

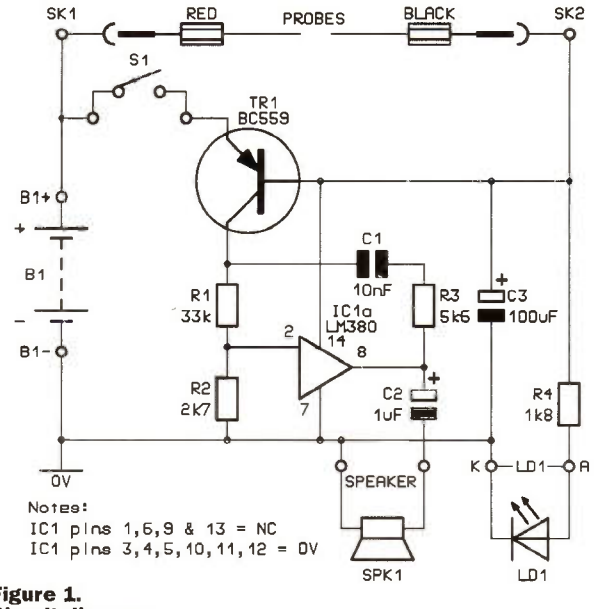

Figure 1.
Circuit diagram.

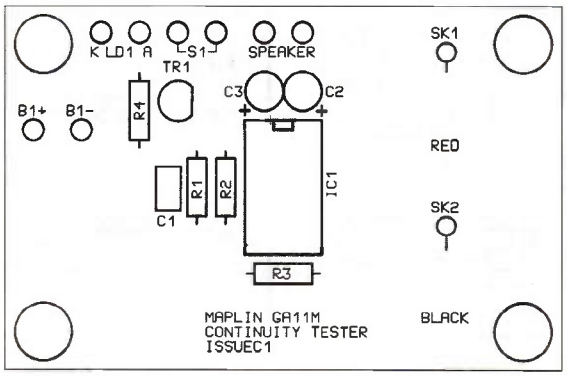

Figure 2. PCB legend and ghost track.

If S1 is switched to the 'on' position, power will be applied to the oscillator circuit via the base-emitter junction of TR1. However, the circuit will not oscillate as the current flowing in the base-emitter circuit of TR1 switches it 'hard' on, thereby obstructing the feedback, and also feeding a small DC potential to the input of IC1 so that it is incorrectly biased. LD1 now operates as an on/of indicator and helps to prevent the unit being inadvertently left switched on. If the test probes are short circuited, TR1 is switched off by the short circuit across its base-emitter terminals, and the oscillator is able to function normally. A certain amount of resistance across the test probes is also sufficient to switch off TR1 and produce oscillation. A forward biased silicon junction will give a voltage of between about 0·5 volts and 0·7 volts (depending upon the exact type) across the base-emitter terminals of TR1. As TR1 is a high gain device the voltage is sufficient to maintain the device in a state of conduction and block the oscillator, thus the unit will not respond to forward biased silicon junctions.

Germanium semiconductor junctions have a lower forward voltage drop than silicon types, so a forward biased germanium junction connected across the test probes *will* switch off TR1 and give an audio tone from the unit. This is not too important as most germanium devices are now obsolete and little used, but TR1 can be replaced by a germanium p.n.p. device (OC72, OC81, OC81D, AC128, etc.) if it is likely that the unit

Figure 3. Box drilling.

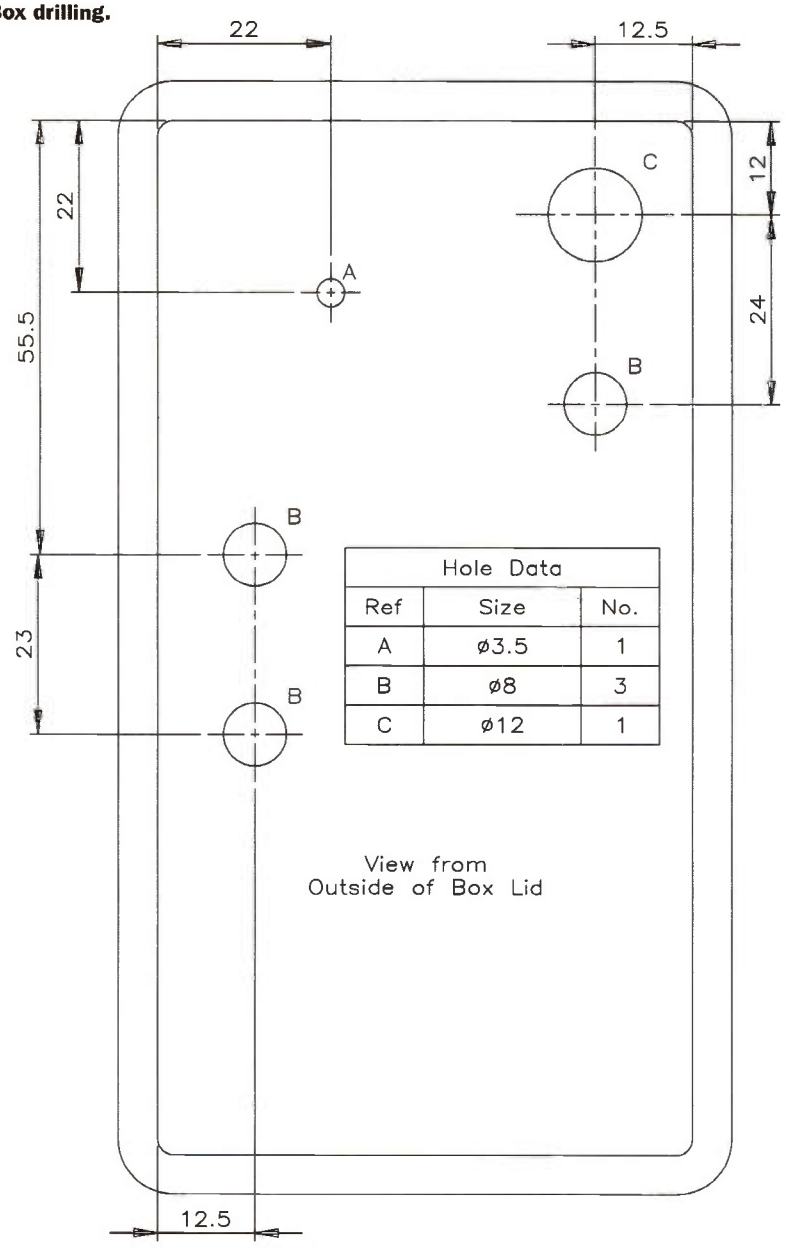

Figure 4. Continuity Tester label.

will be used to test equipment employing such devices.

The current consumption of the circuit is only about 10 to 15mA operating (see Specification Table), and this is provided by a small (PP3/6LR61 size) 9 volt battery.

Construction

The PCB is of single-sided construction – see Figure 2, showing the legend and track. Remember that removal of a misplaced component can be quite difficult, so please double-check each component type, value, and polarity where appropriate, before soldering! Construction is fairly straight forward; beginning with the smallest components first, working up in size to the largest. Insert the PCB pins first, using a hot soldering iron. If the pins are heated in this way very little pressure is required to press them into position. Once in place, the pins may then be soldered. Be careful to correctly orientate the polarised devices i.e., electrolytic capacitors, IC and socket. Fit the DIL holder so that it aligns with the printed legend, with the IC inserted into the socket last of all. Thoroughly check your work for misplaced components, solder whiskers bridges and dry joints. Finally, clean all the flux off the PCB using a suitable solvent.

A plastic box measuring approximately 145 × 80 × 34mm, supplied with the kit, makes an ideal housing for the unit. Refer to Figure 3 for the enclosure drilling, perhaps using the front panel (again, supplied in the kit) as a template, see Figure 4. It is advisable to use a sharp point to make indentations at the marked positions as this will prevent the drill from slipping. Once the drilling is complete, attach the label to the front panel of the enclosure; and trim around the holes using a sharp craft knife or scalpel.

The speaker requires gluing in place using impact (or similar) adhesive, next the LED, switch and 4mm sockets are fitted, followed by the PCB – see the exploded assembly diagram, Figure 5. Next, complete the wiring as shown in Figure 6. Now double check EVERYTHING before finally fitting a fresh battery and the lid to the enclosure (you may wish to use some foam to stop the battery rattling around inside the battery compartment).

The unit is now ready for testing – check the maximum continuity resistance with S1 off (LED off) and on (LED on); the prototype maximum resistances were 224Ω and 67Ω, respectively. Note that the exact values will vary from unit-to-unit, and are dependant on battery voltage. Next, using any signal or power diode, oscillation should only be achieved with the switch in the off position (LED off), with the red probe connected to the anode and the black probe to the cathode (banded end). In all other configurations (S1 on or off), oscillation should not occur. ELECTRONICS

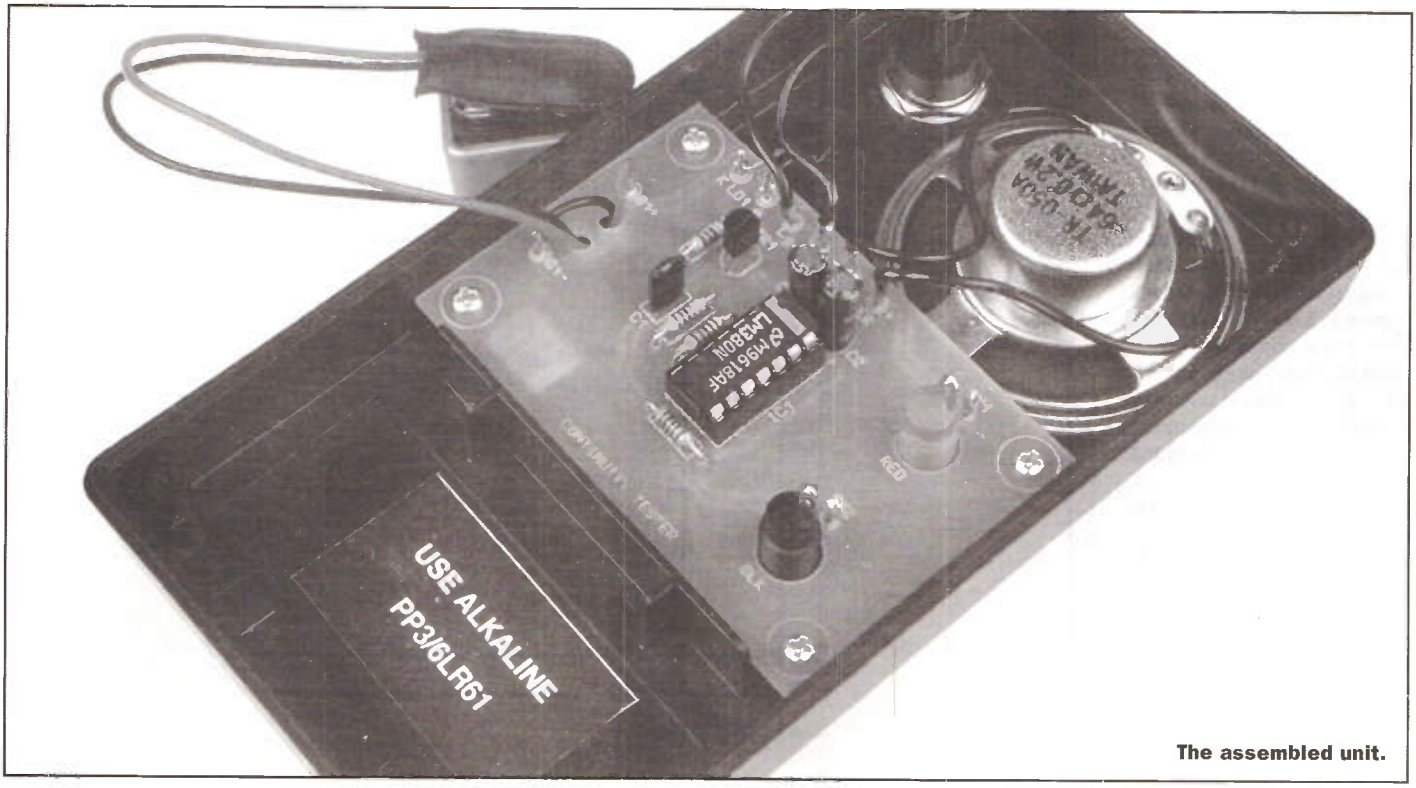

The assembled unit.

Figure 5.
Assembly diagram.

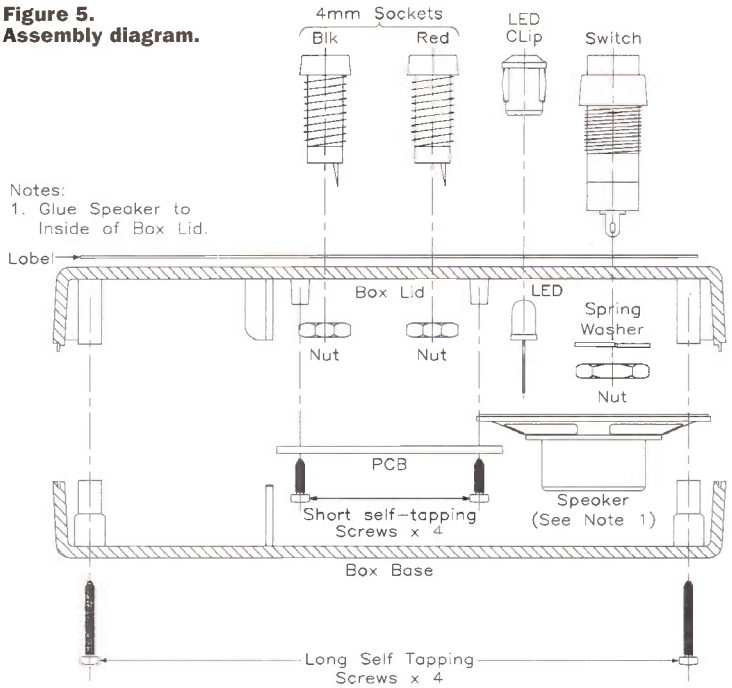

Figure 6.
Wiring diagram.

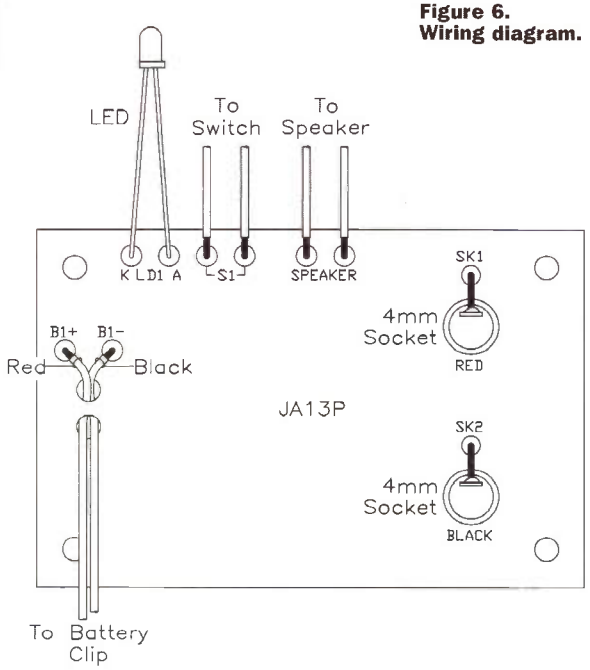

PROJECT PARTS LIST

RESISTORS: All 0·6W 1% Metal film

R1	Min Res 33k	1	(M33K)
R2	Min Res 2k7	1	(M2K7)
R3	Min Res 5k6	1	(M5K6)
R4	Min Res 1k8	1	(M1K8)

CAPACITORS

C1	10nF Mylar	1	(WW18U)
C2	GenElect 1μF 63V	1	(AT74R)
C3	GenElect 100μF 10V	1	(AT30H)

SEMICONDUCTORS

IC1	LM380N	1	(QH40T)
TR1	BC559	1	(QQ18U)
LD1	Hibri LED Red Std	1	(WL84F)

MISCELLANEOUS

S1	Square Psh Lck Red	1	(YW43W)
LS1	L/S Hi-Z 5064	1	(YT28F)
SK1	4mm Socket Red	1	(HF73Q)
SK2	4mm Socket Black	1	(HF69A
	4mm Test Probes	1 pair	(HF33L)
	DIL Socket 14-pin	1	(BL18U)
	LED Clip Convex 5mm	1	(UK14Q)
	Plain HH2 Box	1	(ZB16S)
	PP3 Clip	1	(HF28F)
	7/0·2 Wire Red	1 length	(BL07H)
	7/0·2 Wire Black	1 length	(BL00A)
	Pin 2145	10 pins	(FL24B)
	Sponge Block	1	(FS04E)
	Continuity Tester PCB	1	(GA11M)
	Continuity Tester Label	1	(KV23A)
	Continuity Tester Leaflet	1	(XZ39N)
	Constructors Guide	1	(XH79L)

OPTIONAL (Not in Kit)

All Purpose Glue Std	1	(BP04E)
Duracell PP3	1	(JY49D)

The Maplin 'Get-You-Working' Service is available for this project, see Constructors' Guide or current Maplin Catalogue for details.
The above items (excluding Optional) are available as a kit.
Order As JA13P (Continuity Tester Kit) Price £19.99

Please Note: Where 'package' quantities are stated in the Parts List (e.g. packet, strip, reel, etc.), the exact quantity required to build the project will be supplied in the kit.

The following new items (which are included in the kit) are also available separately, but are not shown in the 1997 Maplin Catalogue.
Continuity Tester PCB **Order As GA11M Price £2.99**
Continuity Tester Label **Order As KV23A Price £2.69**

Get the world of Electronics and Beyond covered...

MAGAZINE BINDER

The Maplin magazine binder holds twelve issues of **Electronics and Beyond**. If you have not got the world of electronics covered, now's your chance! This great quality binder comes in hard-wearing laminated art board, that not only looks good on your bookshelf or workshop desk, but is also a great way to build up an electronics reference library of your own. Now you can keep all of your copies of **Electronics and Beyond** together, and on hand, when you need that extra piece of information.

Order As XH99H
Price £7.13

MAPLIN

Telephone **(01702) 554000** to order.
Prices include VAT.

HERES AN OFFER YOU CAN'T REFUSE!

ENJOY A **FREE** copy OF THE **new**

Cb radio active
COMMUNICATIONS magazine

PACKED WITH ALL THE latest from The World of & Radio Communications & 27MHz Citizens' Band

Please send me my complementary copy of the November issue of Cb radio active

Name .....

Address .....

.....

Town .....

County .....

Postcode .....

send to • Radio Active Publications • 1A Munster Road • North End • Portsmouth • PO2 9BS

OFFER RESTRICTED TO ONE COPY OF THE NOVEMBER ISSUE ONLY

DEVELOPING APPLICATIONS AROUND THE PIC ARCHITECTURE

PART 5

Soft Option

by Stephen Waddington

So far in this series, we have considered only the hardware aspects of the PIC family of microprocessors. This month, it's time to move on and examine an area of microprocessor application development generally despised by electronic engineers – software programming.

Students introduced to microprocessor development are typically sold the line that digital development is far easier than analogue. Forget op-amps and Darlington pair amplifiers if you want to build a control system. Instead, proponents of digital development recommend the use of a microprocessor. What could be more straightforward than knocking out a few lines of code and bolting a single-stage transistor amplifier on the back end to interface with external peripherals?

If only life were that easy. And I know I said at the beginning of this series that the benefit of the microprocessor is the versatility which software allows, so I suppose I'm as guilty. But please don't get me wrong. Microprocessors are versatile. That is not to say that microprocessor application development is easy.

Code Development

Anybody who has ever tried a hand at writing a software application will know that there is far more to developing code than stringing together a couple of routines from a manual. Working with even high level languages such as C++ or BASIC requires hours of painstaking work, creating an initial flow diagram, producing draft code, and debugging programs before refining initial routines to produce the final code.

Developing code for microprocessor applications is, at best, hard work. The primary reason is that you have to work in a low level language at the coal face of the microprocessor. Low level means that there isn't the luxury of simplistic instructions, detailed error messages and sophisticated debugging. There's you and the microprocessor and a bunch of instructions – and that's about it.

The good news is that if you are new to software programming and development, the PIC microprocessor family is a good place to start. Its instruction consists of a mere 33 instructions, with perhaps a couple of additions specific to each device. You can be thankful at this stage that we are not working with the Intel or Motorola device, in which case, there would be over 50 instructions to learn.

The PIC Instruction Set

You will recall that we have been focusing for the sake of practicality, through the initial parts of this series at least, on development around the PIC16C84. This includes two instructions relating to the OPTION and TRIS registers which are unique to it alone and relate to internal functions within the microprocessor, such as the Watchdog Timer. If you want to ensure upwards or downwards compatibility with other members of the PIC family, you should avoid using these instructions.

In later parts of this series, we will look at others members of the PIC family, and examine how they compare in terms of hardware and software with the PIC16C84. In terms of the software, there are not that many differences. Each PIC16CXX instruction consists of a 14-bit word divided into an OPCODE, which specifies the instruction type and one of more operands which specify the operation of the instruction, as shown in Figure 1. The PIC instruction set is divided into three groups, namely byte-oriented, bit-oriented and variable/control operations.

Instruction Types

The distinction between the three types of instruction is relatively straightforward. A byte-oriented instruction operates on a single byte, but remember that microprocessors use binary as their native language. This means a byte is equivalent to the first four digits of a binary number, as shown in Figure 2.

By comparison, bit-oriented instruction operates on a single bit, equivalent to the first eight digits of a binary number, as shown in Figure 2. Each of the registers in the PIC are eight bits long. Bit-oriented instructions can, therefore, be used to operate on an entire register.

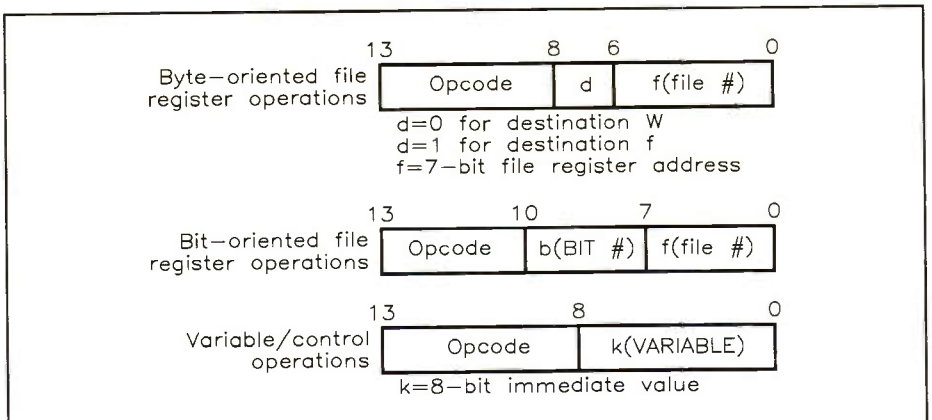

Figure 1. General Format for Instructions.

Instruction	Syntax	Description	Status Affected	Action	Example

BCF	BCF f,b	Bit Clear f	None	Bit b in register f is reset to 0	`BCF FLAG_REG, 7`
					
					`Before Instruction`
					`FLAG_REG = 0xC7`
					
					`After Instruction`
					`FLAG_REG = 0x47`

BSF	BSF f,b	Bit Set f	None	Bit b in register f is reset to 1	`BCF FLAG_REG, 7`
					
					`Before Instruction`
					`FLAG_REG = 0x0A`
					
					`After Instruction`
					`FLAG_REG = 0x8A`

BTFSC	BTFSC f,b	Bit Test, skip if Clear	None	If bit b in register f is 0 then the next instruction is skipped.
				
				If bit b is 0 the next instruction, fetched during the current instruction execution, is discarded and a NOP is executed instead making this a two cycle instruction.
					`HERE BTFSC FLAG,1`
					`FALSE GOTO PROCESS_CODE`
					`TRUE...`
					
					`Before Instruction`
					`PC = address HERE`
					
					`After Instruction`
					`if FLAG<1> =0, PC =address TRUE`
					`if FLAG<1> =1, PC =address FALSE`

BTFSS	BTFSS f,b	Bit Test, skip if Set	None	If bit b in register f is 1 then the next instruction is skipped.
				
				If bit b is 0 the next instruction, fetched during the current instruction execution, is discarded and a NOP is executed instead making this a two cycle instruction.
					`HERE BTFSC FLAG,1`
					`FALSE GOTO PROCESS_CODE`
					`TRUE...`
					
					`Before Instructions`
					`PC = address HERE`
					
					`After Instruction`
					`if FLAG<1> =0, PC =address TRUE`
					`if FLAG<1> =1, PC =address FALSE`

Table 1a. Byte-oriented Instructions.

Finally, variable/control operations are used to manipulate data within the microprocessor or control the housekeeping functions. Mathematical functions as well as instruction relating to the Watchdog time and Sleep mode are among this group of instructions.

We have listed the full PIC instruction set in Tables 1a-c, denoting byte-oriented, bit-oriented and variable/control operations, respectively. The table is broken down into a series of rows denoting the 'Instruction', its 'Syntax', a 'Description' of its function, the registers and variables it operates on, its 'Action' and an 'Example' of usage. We have used a number of pneumonics to indicate the function of individual instructions – a full list of explanations is shown in Table 2.

Timing

All instructions are executed within a single instruction cycle, unless an operation which alters the logical sequence of the program counter is made, such as a JUMP, RETURN or CALL. In these cases, the execution takes two instruction cycles, with the second cycle executed as a NOP. The execution period of instructions is detailed in Table 1 in the 'Action' column.

A single instruction cycle consists of four oscillator periods or clock cycles. Thus, for an oscillator frequency of 4MHz, the normal instruction execution time is 1μs. If the program counter is changed as the result of an instruction, the execution time is equivalent to eight oscillator periods – or 8μs.

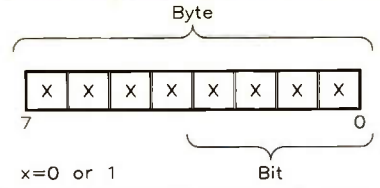

Figure 2. PIC16C84 Register Format.

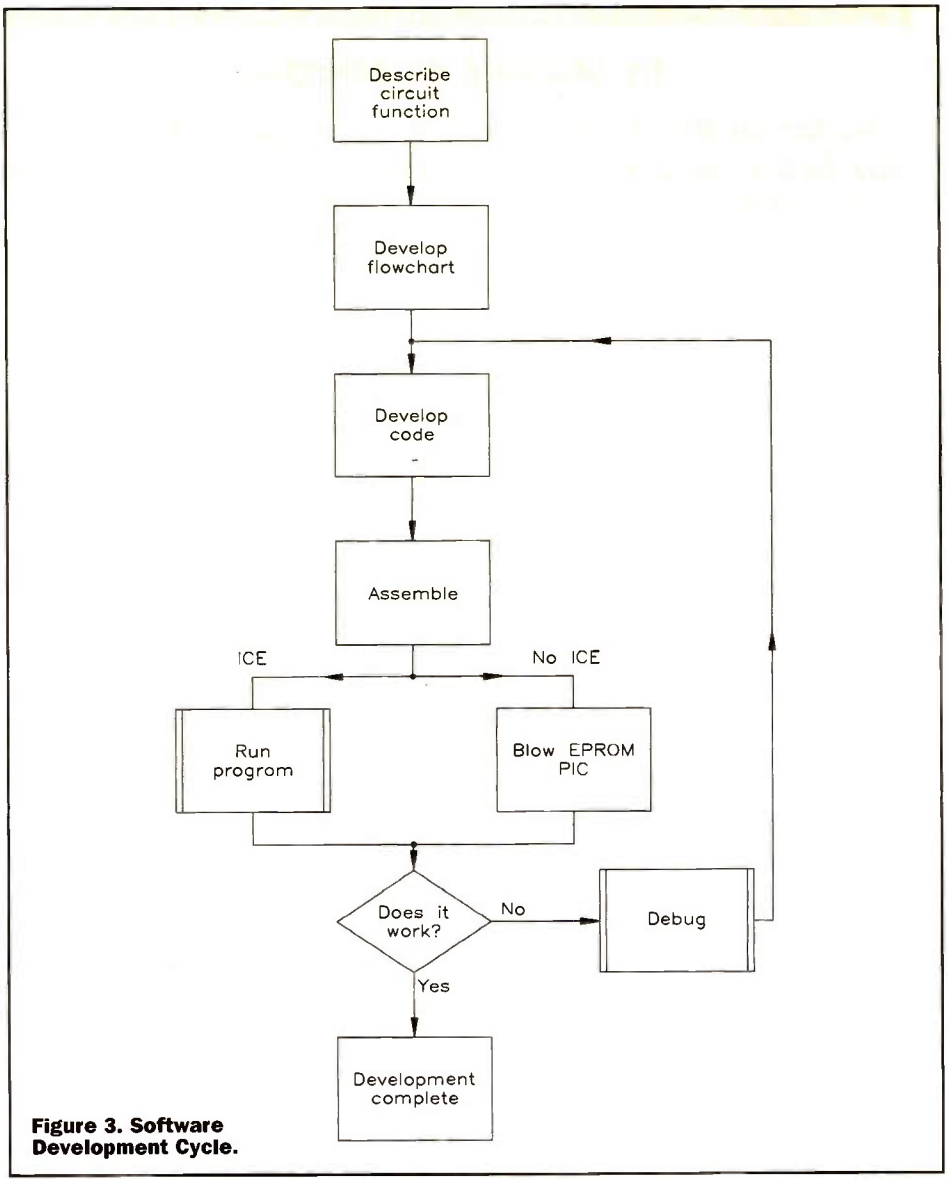

Figure 3. Software Development Cycle.

Instruction	Syntax	Description	Status Affected	Action	Example
ADDWF	ADDWF f,d	Add W to f	C, DC, Z	Add the contents of the W register to register f. If d is 0 the result is stored in the W register. If d is 1 the result is stored back in register f.	ADDWF FSR, 0 Before Instruction W = 0x17 FSR = 0xC2 After Instruction W = 0xD9 FSR = 0xC2
ANDLW	AND f,d	AND Variable and W	Z	The contents of the W registers are ANDed with the 8-bit variable k. The result is placed in the W register.	ANDLW 0x5F Before Instruction W = 0xA3 After Instruction W = 0x03
ANDWF	ANDWF f,d	AND W with f	Z	AND the W register with register f.If d is 0 the result is stored in the W register. If d is 1 the result is stored back in register f.	ANDWF FSR, 1 Before Instruction W = 0x17 FSR = 0xC2 After Instruction W = 0x17 FSR = 0x02
CLRF	CLRF f	Clear f	Z	The contents of register f are cleared and the Z bit is set	CLRF FLAG_REG Before Instruction FLAG_REG = 0x5A After Instruction FLAG_REG = 0x00 Z = 1
CLRW	CLRW	Clear W Register	Z	W register is cleared. Zero bit (Z) is set.	CLRW Before Instruction W = 0x5A After Instruction W = 0x00 Z = 1
COMF	COMP f,d	Complement f	Z	The contents of register f are complemented. If d is 0 the result is stored in W. If d is 1 the result is stored back in register f.	COMF f,d Before Instruction REG1 = 0x13 After Instruction REG1 = 0x13 W = 0xEC
DECF	DEC f,d	Decrement f	Z	Decrement register f. If d is 0 the result is stored in the W register. If d is 1 the result is stored back in register f.	DECF f,d Before Instruction CNT = 0x01 Z = 0 After Instruction CNT = 0x0o Z = 1
DECFSZ	DECFSZ	Decrement f, skip if 0	None	The contents of register f are decremented. If d is 0 the result is placed in the W register. If d is 1 the result is placed back in register f. If the result is 0, the next instruction, which is already fetched, is discarded. A NOP is executed instead making it a two-cycle instruction.	HERE DECFSZ CNT, 1 GOTO LOOP CONTINUE... Before Instruction PC = address HERE After Instruction CNT = CNT - 1 If CNT = 0, PC = address CONTINUE if CNT <> 0, PC = address HERE + 1
INCF	INCF f,d	Increment f	Z	The contents of register f are incremented. If d is 0 the result is placed in the W register. If d is 1 the result is placed back in the register f.	INCF CNT,1 Before Instruction CNT = 0xFF Z = 0 After Instruction CNT = 0x00 Z = 1
INCFSZ	INCFSZ f,d	Increment f, skip if 0	None	The contents of register f are incremented. If d is 1 the result is placed back in register f. If the result is 0, the next instruction, which is already fetched is discarded. An NOP is executed instead	HERE INCFSZ CNT, 1 GOTO LOOP CONTINUE... Before Instruction PC = address HERE After Instruction CNT = CNT + 1 If CNT = 0, PC = address CONTINUE if CNT <> 0, PC = address HERE + 1

Table 1b. Bit-oriented Instructions.

Instruction	Syntax	Description	Status Affected	Action	Example
IORWF	IORWF f,d	Inclusive OR W with f	Z	Inclusive OR the W register with register f. If d is 0 the result is stored in the W register. If d is 1 the result is stored back in register f.	IORWF RESULT, 0 Before Instruction RESULT = 0x13 W = 0x91 After Instruction RESULT = 0x13 W = 0x93
MOVF	MOVF f,d	Move f	Z	The contents of register f is moved to destination d. If d=0 destination is W register. If d=1, the destination is file register f itself. d=1 is useful to test a file register since status flag Z is affected.	MOVF f,d After Instruction W = value in FSR register
MOVWF	MOVWF f	Move W to f	None	Move data from W register to register f.	MOVWF OPTION Before Instruction OPTION = 0xFF W = 0x4F After Instruction OPTION = 0x4F W = 0x4F
NOP	NOP	No Operation	None	No operation	NOP
RLF	RLF f,d	Rotate Left f through Carry	C	The contents of register f are rotated 1-bit to the left through the Carry Flag. If d is 0 the result is placed in the W register. I d is 1 the result is stored back if register f.	RLF REG1,0 Before Instruction REG1 = 1110110 C = 0 After Instruction REG1 = 11100110 W = 11001100 C = 1
RRF	RRF f,d	Rotate Right f through Carry	C	The contents of register f are rotated 1-bit to the right through the Carry Flag. If d is 0 the result is placed in the W register. I d is 1 the result is stored back if register f.	RRF REG1,0 Before Instruction REG1 = 11100110 C = 0 After Instruction REG1 = 111001100 W = 01110011 C = 1
SUBLW	SUBLW k	Subtract W from Variable	C, DC, Z	The W register is subtracted (two's complement method) from the 8-bit variable k. The result is placed in the W register.	SUBLW 0X02 Before Instruction W = 1 C = ? After Instruction W = 1 C = 1; result is positive. If result is negative C = 0
SUBWF	SUBWF f,d	Subtract W from f	C, DC, Z	Subtract (two's complement method) the W register from register f. If d is 0 the result is stored in the W register. If d is 1 the result is stored back in register f.	SUBWF REG1,1 Before Instruction REG1=0 W=1 C=0; result is negative After Instruction REG1 = FF W = 1 C = 0
SWAPF	SWAPF f,d	Swap f	None	The upper and lower nibbles of register f are exchanged. If d is 0 the result is placed in W register. If d is 1 the result is placed in register f.	SWAP REG, 0 Before Instruction REG = 0xA5 After Instruction REG = 0xA5 W = 0xA5
XORWF	XORWF f,d	Exclusive OR W with f	Z	Exclusive OR the contents of the W register with register f. If d is 0 the result is stored in the W register. If d is 0 the result is stored in the W register. If d is 1 the result is stored back in register f.	XORWF REG, 1 Before Instruction REG = 0xAF W = 0xB5 After Instruction REG = 0x1A W = 0xB5

Table 1b (continued). Bit-oriented Instructions.

Instruction	Syntax	Description	Status Affected	Action	Example
ANDLW	ADDLW k	Add Variable to W	C, DC, Z	The contents of the W register are added to the 8-bit variable k and the result is placed in the W register.	ADDLW 0x15 Before Instruction W = 0x10 After Instruction W = 0x25
CALL	CALL k	Subroutine call	None	Subroutine call. First, return address (PC+1) is pushed onto the stack. The 11-bit immediate address in loaded into PC bits 0 to 10. The remaining upper bits of the PC are loaded from PCLATH (f03). CALL is	HERE CALL THERE Before Instruction PC = Address HERE After Instruction PC = Address THERE TOS = Address HERE
CLRWDT	CLRWDT	Clear Watchdog Timer	$\overline{TO}$, $\overline{PD}$	CLRWDT instruction resets Watchdog Timer. It also resets the prescaler of WDT. Status bits are set.	CLRWDT Before Instruction WDT counter = ? After Instruction WDT counter = 0x00 WEDT prescaler = 0 $\overline{TO}$ = 0; $\overline{PD}$ = 0
GOTO	GOTO k	Branch	None	GOTO is an unconditional branch. 11-bit immediate value is loaded into PC bits 0 to 10. Upper PC bits are loaded from bits 3 and 4 of PCLATH. GOTO is a two cycle instruction.	GOTO THERE After Instruction PC = Address of THERE
IORLW	IORLW k	Inclusive OR Variable with W	Z	The contents of the W register are OR'ed with the 8-bit variable k. The result is placed in the W register.	IORLW 0x35 Before Instruction W = 0x9A After Instruction W = 0xBF
MOVLW	MOVLW k	Move Variable to W	None	The 8-bit variable k is loaded into the W register.	MOVLW W = 0x5A
OPTION	OPTION	Load OPTION register	None	The contents of the W register is loaded into the OPTION register. This instruction is only supported by the PIC16C84.	OPTION Before Instruction OPTION = ? After Instruction OPTION = W
RETFIE	RETFIE	Return from Interrupt	None	Return from Interrupt. Stack is popped and Top of Stack (TOS) is loaded in PC. Interrupts are enabled by setting the GIE bit. GIE is the global interrupt enable bit (INTCON register, bit 7). This is a two-cycle instruction.	RETFIE After Interrupt PC = TOS GIE = 1
RETLW	RETLW k	Return Variable to W	None	The W register is loaded with the 8-bit variable k. The PC is loaded from the top of the stack – the return address. This is a two cycle instruction.	RETLW Before Instruction W = ?; PC = ? After Instruction W = k; PC = return address
RETURN	RETURN	Return from Subroutine	None	Return from Subroutine. The stack is popped and the top of the stack (TOS) is loaded into the program counter. This is a two cycle instruction.	RETURN After Interrupt PC = TOS
SLEEP	SLEEP	SLEEP Mode	$\overline{TO}$, $\overline{PD}$	SLEEP mode. Power down status bit ($\overline{PD}$) is cleared. Time-out status bit ($\overline{TO}$) is set. Watchdog timer and its prescaler are cleared. Processor is put into SLEEP Mode with clock stopped.	SLEEP
TRIS	TRIS f	Load TRIS register	None	The contents of the W register is loaded into the control register f, where f = 5, 6 or 7. This instruction is only supported by the PIC16C84.	TRIS f Before Instruction f = ? After Instruction f = W
XORLW	XORLW k	Exclusive OR variable with W	Z	The contents of the W register are XOR'ed with the 8-bit variable k. The result is placed in the W register.	XORLW OxAF Before Instruction W = 0xB5 After Instruction W = 0x1A

Table 1c. Variable/Control Operations.

Pneumonic	Description
f	Register file address (0x00 to 0x7F)
W	Working register (accumulator)
b	Bit address within an 8-bit register file
k	Variable, constant data or label
x	Don't care location. The assembler will generate code with x = 0
d	Destination select: d = 0 - store result in W; and d = 1 - store result in file register f. Default is d = 1
label	Label name
TOS	Top of Stack
PC	Program Counter
PCLATH	Program Counter High Latch
GIE	Global Interrupt High Latch
WDT	Watchdog Timer Counter
**	Time-Out Bit
**	Power-down Bit
dest	Destination either the W register or the specified register file location
[ ]	Options
( )	Contents
< >	Register bit field
italics	User defined term

Table 2. Instruction Pneumonic Descriptions.

Whichever method is used, code is written and developed using a basic text editor on a PC. It is then converted into source code – using a Windows or DOS application called an assembler – which the microprocessor can interpret. The assembler converts the instructions into their binary equivalents and assigns physical addresses to subroutines, variables and labels. Once a program has been compiled, it can be downloaded to the ICE or target PIC chip for testing.

Next Month

Next month, we'll build on the initial set of instructions we've examined here, and develop a series of software routines, before tying together the hardware and software elements of the PIC16C84. ELECTRONICS

The Development Cycle

There are two basic routes to software development. The most professional method relies on the use of an In Circuit Emulator (ICE) to test code during the development cycle. The more usual approach for the hobbyist involves using a PIC. Both approaches are outlined in the flow diagram in Figure 3.

An ICE is a piece of hardware which interfaces between the PC and development environment or target circuit board, as shown in Figure 4. Code developed on the PC is downloaded to the ICE, which interprets it in exactly the same manner as a PIC device. The advantage of this approach is that the programmer can closely control how the program operates. Instructions can be stepped through one-by-one and each register and input/output monitored closely.

The major downside of the ICE approach is that the emulator hardware is expensive. A basic emulator costs approximately £500, placing it beyond the realms of the amateur developer. Downloading code to EPROM for testing is the most cost-effective solution, but I recommend that you purchase half a dozen or so devices. Continually erasing and downloading code is at best tedious, as it can take up to 20 minutes to erase code.

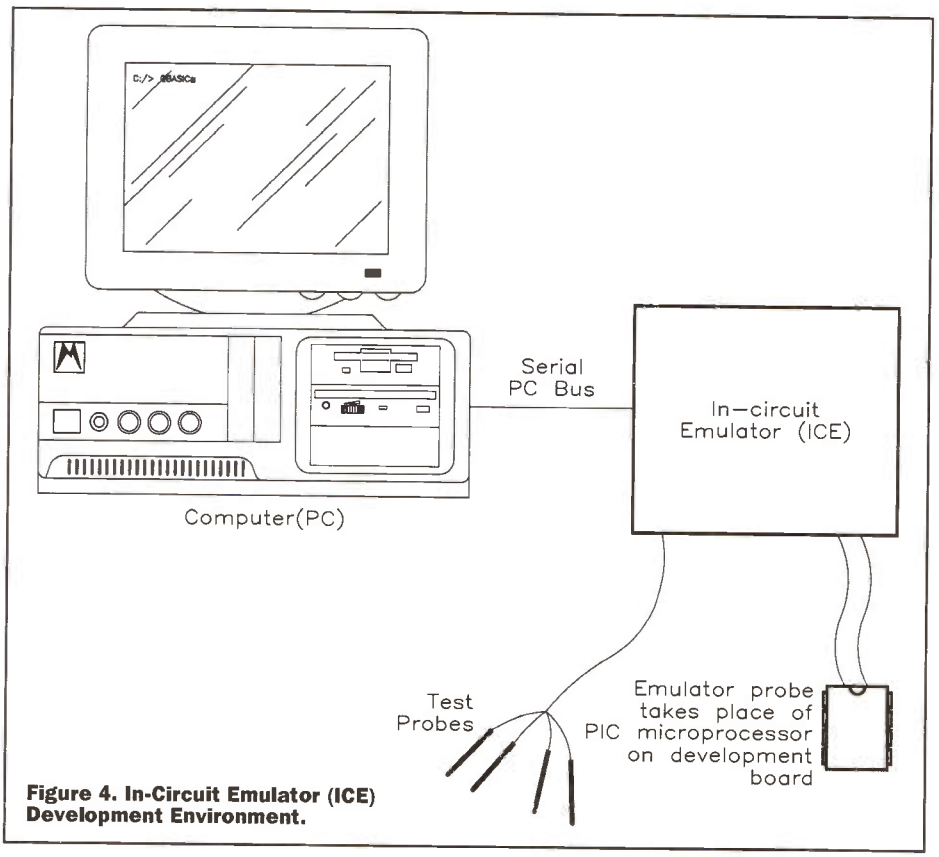

Figure 4. In-Circuit Emulator (ICE) Development Environment.

Rediscover a wealth of information you never knew you had with a Magazine Index

MAGAZINE INDEX

A comprehensive index to **Electronics and Beyond** is also available from Maplin. The index covers every issue from December 1981 to October 1995. Included are details of every article, series and project published during that period. Conveniently arranged, sectionally and alphabetically, it'll take minutes instead of hours to find the exact issue number and page you need. You'll be able to rediscover a wealth of information you never knew you had! A list of all the corrigenda published is also included, so you will be able to find details of changes or amendments. You'll find the index an invaluable addition to the issues of **Electronics and Beyond** that you have.

Order As XU87U
Price 99p

MAPLIN

Telephone **(01702) 554000** to order.
Prices include VAT.

COMMENT

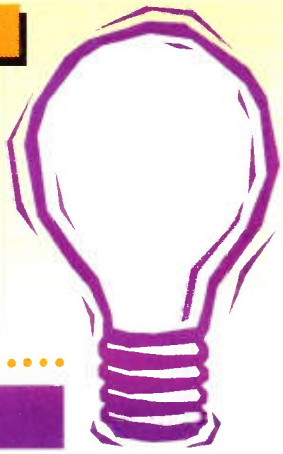

by Keith Brindley

The long-awaited high-definition television (HDTV) agreement between United States' television and computer manufacturers, and television broadcasters has been reached, which should set the US ahead of both Europe and Japan in the rush to get proper HDTV systems up-and-running.

One of the main setbacks which kept the agreement from being reached for so long was the fact that computer manufacturers didn't want any resultant high-definition television standard to specify an interlaced scan method of producing the picture. Interlaced scan is the normal prerequisite for broadcast television pictures, but computers use a progressive scan method. These two picture transmission methods are mutually incompatible.

The agreement leaves television broadcasters free to broadcast pictures to either format, and means they can start to develop required broadcasting systems. However, as it is an open-ended agreement, specifying no particular standard, it does leave the industry rather at a temporary crossroads. Computer manufacturers will obviously want broadcasters to transmit in progressive scan format, while television manufacturers will want interlaced scanning. In effect, the agreement is merely an agreement to disagree, rather than one which proposes a pre-defined standard.

In the absence of a pre-defined standard, it's likely that it will be a while until the system is properly set up, and in the event it could be an ad hoc combination of systems which will result. Hopefully, though probably not likely, European moves to a high-definition television system will benefit from hindsight and the problems the US agreement has had to overcome to produce the agreement.

Virtually Surrounded

While most people agree that surround sound systems for 'home theatre' style televisions are impressive in their performance, systems like Dolby Pro Logic aren't ideal because they require some five loudspeakers spaced around the room to ensure the proper sound effect. Two main loudspeakers at the left and right of front of the sound area carry most sound information, with a third to the middle front carrying central sound, and two rear loudspeakers at the sides stretching out the theatre-like perception.

Not everyone has the room to position five loudspeakers around the viewing area, of course, and even if there is room, not everyone *wants* five loudspeakers. Couple this with the cost of having five loudspeakers, and there are some very convincing arguments why not to have surround system. As a result, several television manufacturers have produced systems which produce a sort of surround sound more cheaply and with fewer loudspeakers.

Developers of the Dolby Pro Logic system, Dolby Laboratories, recognises the problems caused by the five loudspeaker requirement, and has launched an initiative to produce a virtual loudspeaker processing system, in partnership with several other television and audio electronics developers, which will use only two loudspeakers to create all the surround sound information.

Keeping the Doctor Away

At the end of last year, just as everyone was packing their bags and heading home to Mum's Christmas turkey, Apple announced it had bought NeXT, lock, stock and barrel. Now, for the majority of personal computer users, this might not seem much of a fact at all. But it is, and let me explain why.

For long enough, Apple has tried to win over the business community with its Macintosh range of computers. For many users (around 9% of the world's personal computer users, in fact), the Mac is the computer of choice. Ask any Mac user whether they'd change their machine for a Windows or DOS PC and they'd simply laugh in your face. The Mac, it seems, has long been the personal computer most people actually love, but only a minority buy. And believe me, Mac users have a real love affair with their computers – Macs aren't just tools to do exactly the same jobs PC users use their machines for, Macs to Mac users are individual personalities which help them actually enjoy doing the jobs at the same time!

For the computing majority, of course, individuality in a computer isn't understood – a PC is merely a box by comparison, and one box is as good as another. For them, going with the mainstream is the norm – despite the Mac's superiority in terms of ease of use and performance. Only Windows '95 has brought the aging PC interface up to any sort of standard which resembles the Mac's ease-of-use at all, but it still has no 'personality'.

Being better, however, hasn't won Apple any greater market share. Despite consistently being one of the top three computer manufacturers for the past ten years, 9% is still a minority share of the total market, after all. The purchase of NeXT could change all that, though. The NeXT operating system (called NeXTSTEP) is capable of running on all the major computing platforms (Unix and WindowsNT, for example, as well as the Macintosh) and this will be a positive thing.

It opens up personal computing for a start. Until recently, personal computers have been effectively closed-shop. IBM-compatible PCs use Intel-based microprocessors, running Microsoft operating systems (DOS and Windows). Macs historically use Motorola microprocessors, running Apple's MacOS, and never the twain did meet. But Motorola-based PowerPC computers due out in the next six months from many manufacturers (including Apple) built to the PowerPC Reference Platform will be able to run WindowsNT, Unix *and* the MacOS. A future MacOS (based on multi-platform NeXTSTEP) might be able to make the complementary transition across to Intel-based PCs.

Imagine a world where all computers using whatever microprocessor a manufacturer chooses to include can run any major operating system. *That's* a real open system, and one which Apple might be able to benefit from, letting more users see the Mac advantage.

Finally, for reference, NeXT is the company started by the man generally credited for being the father of the Mac in the first place, Steve Jobs. He left Apple over ten years ago, but now returns with NeXT. Jobs has always been a computing visionary and his re-employment at Apple is sure to produce some forward-thinking results.

The opinions expressed by the author are not necessarily those of the publisher or the editor.

PROJECT

Mains Socket WIRING TESTER

by Mark Price

You know the situation – you've spent all day knocking channels and holes in the plaster, and burying the cables. It's now nearly midnight, and you've just fitted the socket plates and turned the power back on. You could get the multimeter out and check it's all wired correctly, but you really can't be bothered. After all, you joined the three wires to the right terminals didn't you? And the earth wire didn't come away when you screwed the plate in place, did it? Can you be certain it's correct?

Wouldn't it be useful to have a little whatsit that you can plug into the socket to tell you instantly if it's wired OK or not? A professional electrician would have a test plug with three neon lights to do just this. However, these items are not readily available in DIY stores. You can get them from electrical trade counters and wholesalers, but they cost around £40, which is rather expensive for the occasional DIY job.

The testplug described here does exactly the same job as the professional ones – and works the same way. However, this one uses about £8 worth of readily obtainable bits.

The testplug is also useful for checking multiway adaptors and extension leads. Earth faults are surprisingly common with these, and will normally pass unnoticed until the worst happens.

Circuit Description

The complete circuit diagram is shown in Figure 1.

The neon lamps will illuminate once the voltage across them reaches about 60V. The current required is less than 1mA, which is controlled by the series 220kΩ resistor.

Three sets of neons and series resistors are connected between the three pins on a 13A plug. With a correctly wired socket, the Live to Neutral and Live to Earth neons only, will light.

The additional 100kΩ resistors in parallel with each neon prevent the neons lighting if there are two in series. This would happen if the Earth or Neutral wire was not connected.

This unit can reveal all common socket wiring errors, except Neutral and Earth reversed. Since these two lines are at almost the same potential, this is impossible to detect with a simple testplug.

Construction

The neons and resistors are mounted on a small PCB. The component positioning is shown in Figure 2, while Figure 3 shows the PCB track layout.

Before fitting the neons, attach a white self-adhesive label to the PCB, with the bottom edge 5mm above the neon holes. This is to reflect the light from the neons. Bend the neon leads 5mm from the body before fitting into the PCB. Although the PCB assembly is straightforward, please take care to avoid errors.

The PCB is fitted into a small plastic box (type T3), which is mounted on the back of a normal 13A plug. The original plan was to use one of the small cases fitted with plug pins, intended for power supplies. However, these are not readily available with a metal earth pin.

Select a 13A plug with a flat back (many are slightly curved). Ideally, this should be made of the softer unbreakable plastic, since this is easier to drill. The plug used on the prototype was branded PMS.

Remove the back from the plug, and drill two 3mm holes in convenient positions. On the prototype, one hole was above the cord grip and the other was in the void between the Neutral and Earth pins.

Position the plug back on the base of the box, about 5mm down from the top, and mark

SPECIFICATION

Supply:	230V AC 50Hz (British 13A Socket)
Current Consumption:	2mA (maximum)
Indicators:	Three Neon Lamps
States Indicated:	Live and Neutral Reversed
	Live and Earth Reversed
	No Live
	No Neutral
	No Earth
	Correct
PCB Size:	58 × 41mm
Overall Size (WHD):	50 × 86 ×72mm (depending on plug used)
Weight:	110g

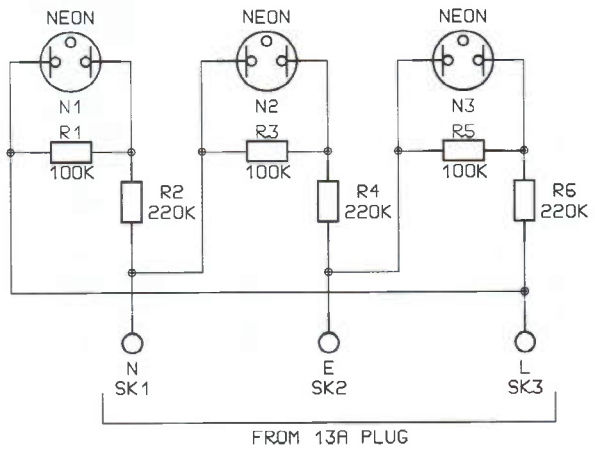

Figure 1. Circuit diagram.

PCB mounting pillar positioning.

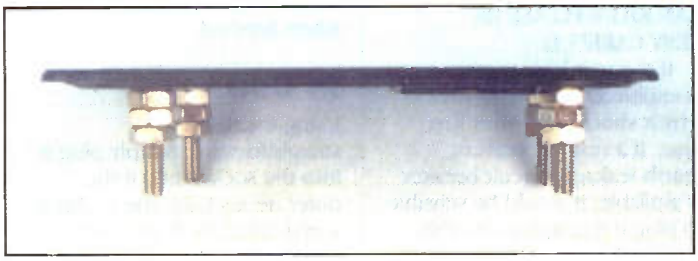

the positions of the holes. Drill the holes and fix the plug back in place with two 6mm long M3 pan-head screws and nuts. If necessary, some suitable adhesive may be used to reinforce the joint. Drill a hole in the back of the box, below the plug cable entry position, to suit the three-core being used.

Take a 150mm length of this flex and connect one end correctly to the plug base. Fit a 2A fuse in the plug. Feed the other end of the wire through the hole in the box, and screw the plug together. Fit a cable tie around the cable on the inside of the box. Strip the outer insulation back, inside the box.

Position the PCB centrally inside the box lid. Mark and drill the four 3mm fixing holes and three 6mm holes for the neons to show through. The fixing holes should be countersunk from the outside. A piece of neutral (or red) filter material must be glued inside the case over the holes.

Note that the filter material cannot be cut with scissors, as it will crack. Use a junior hacksaw.

Cut the wires to length and solder to the PCB as shown on the component overlay. Mount the PCB with 10mm M3 insulated spacers. Use countersunk screws in place of those supplied with the spacers on the outside of the box. Ensure that any metal parts outside the box are not connected to any metal parts inside the box.

To prevent the light from one neon showing in another window, two pieces of the outer insulation from the mains cable may be positioned between the PCB and the front panel, between the neons. The insulation should be the right diameter to be a snug fit, but if it is too loose, it can be fixed to the PCB with superglue.

When fitting the lid onto the box, ensure the wires do not lay underneath the PCB. A suitable front panel overlay is shown in Figure 4. This may be photocopied onto a self-adhesive label, covered with clear self-adhesive vinyl and fixed to the case. Note that the label will cover the heads of the fixing screws.

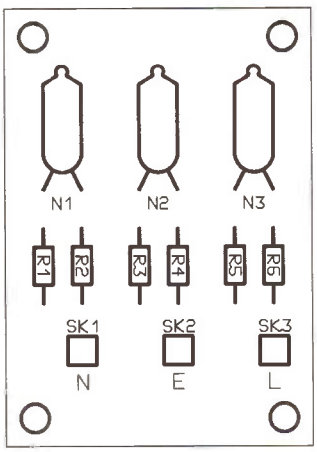

Figure 2. PCB legend, showing component positions.

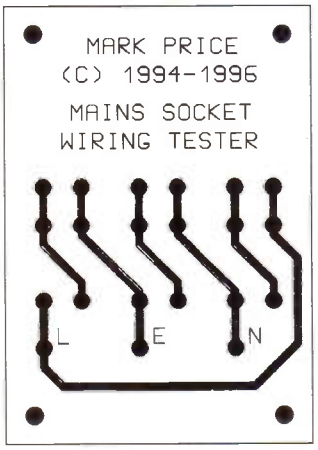

Figure 3. PCB track.

Adaptations for Overseas Use

Overseas readers may be able to adapt this design to suit their local supplies by attaching the case in some way to the rear of an appropriate type of mains plug. If the mains supply voltage is around 120V, the 220kΩ resistors should be reduced to 68kΩ.

Note that this unit will only give the correct indication if the neutral line is at a similar potential to earth. It cannot be used in countries where the supply is floating or where the mid-point of the supply is earthed. Check this with a qualified electrician or your local electricity supply company if in any doubt.

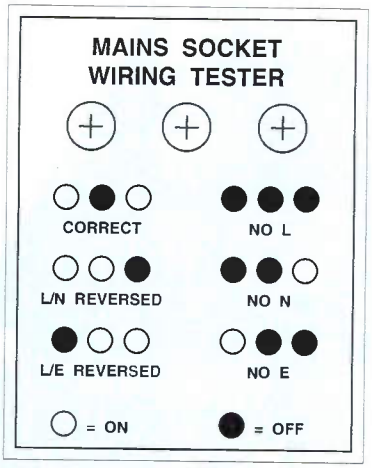

Figure 4. Front panel labelling.

Testing

NEVER OPERATE THIS UNIT UNLESS IT IS FULLY ASSEMBLED. MAINS VOLTAGE CAN KILL – PLEASE BE VERY CAREFUL!

If the unit is correctly assembled, there is no reason why it should not work first time. If a residual current (earth leakage) circuit breaker is available, it would be sensible to plug the testplug into this for initial testing. Assuming your socket is wired correctly, the outer two neons should light and the centre one should remain off.

If you wish to try the various fault conditions, this can be achieved by altering the wiring in one end of an extension lead. Switch the mains off and unplug before touching any connections, and replace all covers before switching back on. Be sure to rewire the extension lead correctly when finished.

In Use

Using the testplug is straightforward. Simply plug it into the socket, and if the outer neons light, the socket is wired correctly. If any other combination of neons illuminate, there is a fault with the socket which must be investigated.

A faulty socket must not be used under any circumstances. If you are not able to correct the wiring immediately, cover the socket with insulation tape and affix a suitable notice to prevent anybody attempting to use it.

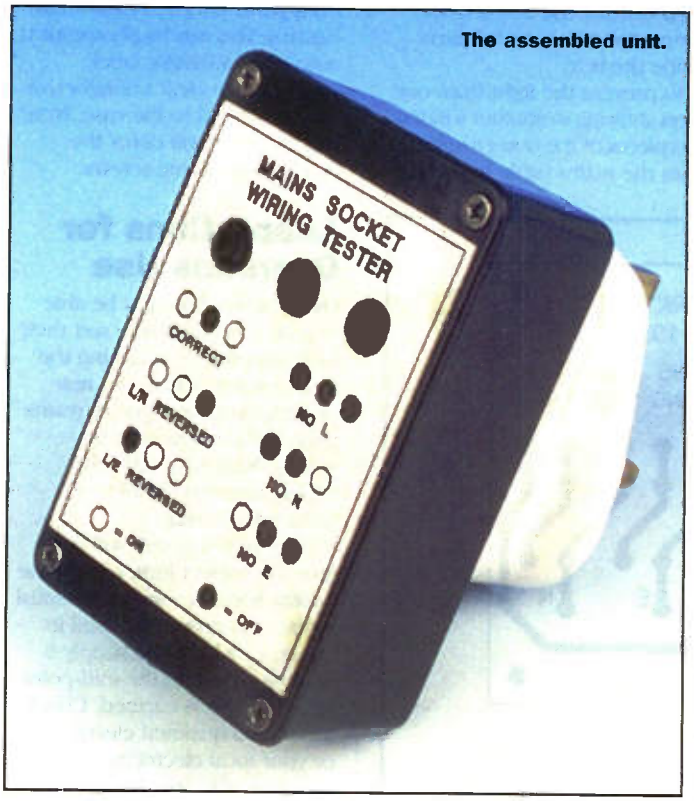

The assembled unit.

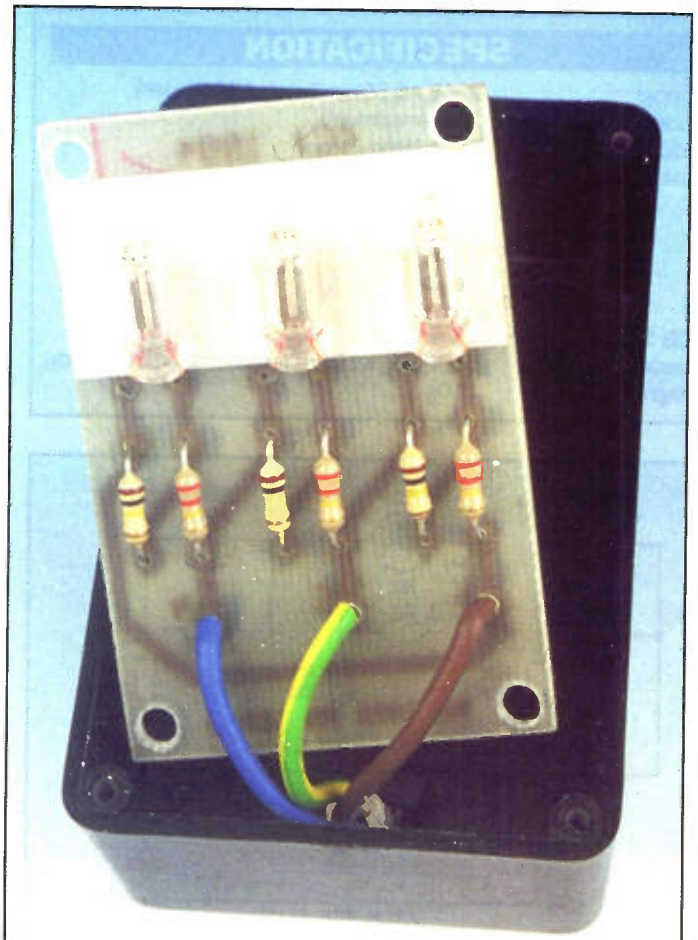

Fitting the PCB into the box.

When testing extension leads and multiway adaptors, wiggle the test plug around and check that the neons do not flicker. Many multiway adaptors have poor earth contacts which can give intermittent operation.

Never take any chances with mains electricity. If you are in any doubt, please seek expert advice.

Printed Circuit Board

A small PCB for this project could be available, subject to sufficient interest from Paul Stenning. For price and ordering details, please write, enclosing an SAE or IRC, to: Paul Stenning, 1 Chisel Close, Hereford, HR4 9XF, England.

PROJECT PARTS LIST

RESISTORS: All 0·6W 1% Metal Film

R1,3,5	100K	3	(M100K)
R2,4,6	220K	3	(M220K)

MISCELLANEOUS

N1-3	Wire Ended Neon Lamp	3	(RX70M)
	13A Plug	1	* See text *
	2A 1in. (25·4mm) Fuse	1	(HQ31J)
	Plastic Box Type T3	1	(KC92A)
	Filter Material Neutral	1	(JE16S)
	3A 3-core Mains Flex	1	(XR02C)
	M3 Insulated Spacers 10mm	1 Pkt	(FS36P)
	M3 6mm Countersunk Screws	1 Pkt	(BF36P)
	M3 6mm Pan Head Screws	1 Pkt	(JY21X)
	M3 Nuts	1 Pkt	(JD61R)
	100mm Cable Tie	1	(BF91Y)
	PCB	1	* See text *

The Maplin 'Get-You-Working' Service is not available for this project.
The above items are not available as a kit.

Analogue and Digital circuit modelling -

Makes waves on the screen, not with the bank account

30 day no quibble money back guarantee

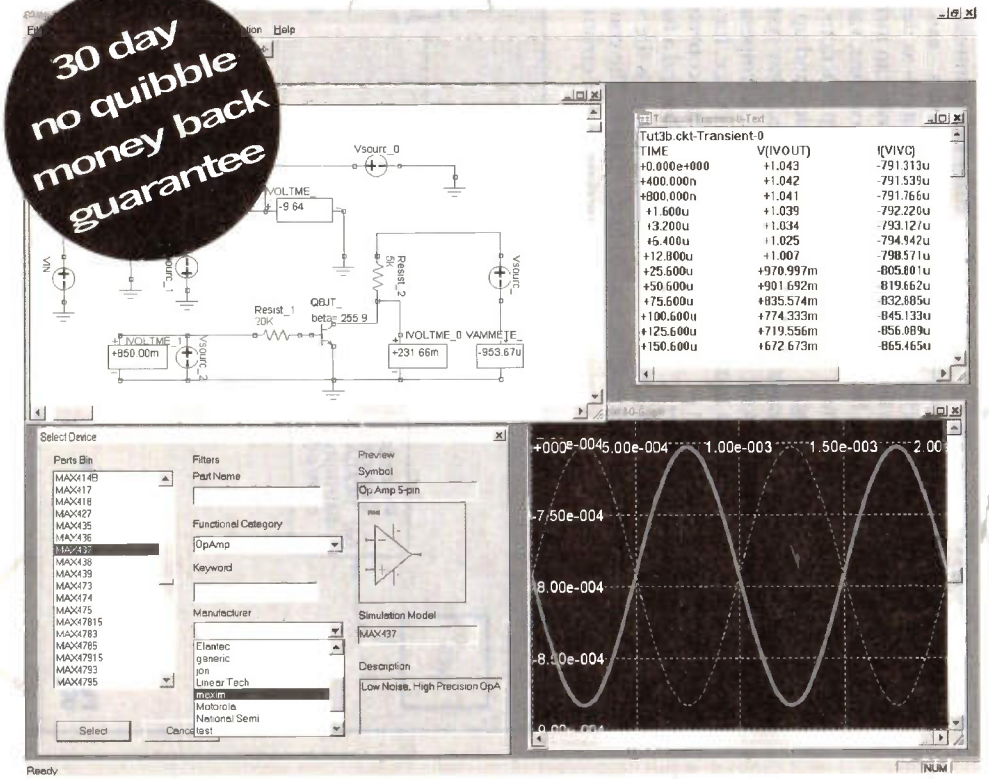

"B² Spice has to be the best modelling package I have used. It certainly offers outstanding value for money. I can highly recommend it." ***Mike Moore of CRI UK***

"This Professor and his students really appreciate the ease of the use with which a schematic can be entered and a design can be simulated. B² Spice is remarkable." ***Professor Richard Sandige, University of Wyoming***

"B² Spice is very easy to use and the graphics are excellent!." ***Ray Lewis, Carter Burgess Consultants***

- **Free unlimited technical support**
- **For the PC or Mac**

New to the UK, **B² SPICE** is *the* analogue circuit modelling package for students and engineers who want to undertake serious computer modelling, and need a package that can produce results.

B² SPICE uses industry standard computer simulation (SPICE 3F5) to drive a package which is powerful, fast and reliable, but at a fraction of the cost usually associated with such comprehensive software. Look at just some of the features:

- Set up all SPICE simulation options
- Import/export SPICE netlists as well as additional manufacturers models
- Includes the Berkley SPICE library + the Commercial Library with 1000's of models from the major manufacturers
- Model/symbol editing to customise models in the library and create new ones
- Results displayed in scrollable waveform and table format
- No limit to maximum circuit size
- Plus much more

Commands include: AC & DC waveform analysis, Transient analysis, Fourier, Noise, Sensitivity, Distortion, Tf(small signal transfer), plus much more

And for Digital Modelling - B² LOGIC

Build the circuit on the screen and test it out by placing probes directly in the circuit. As the simulation progresses, the signal values are displayed, both in the probes and in a scrollable timing diagram

- Multiple families of components
- Shrink saved circuits to block size to test and drive new ones
- Customise rise and fall delays of individual pins on components
- Place probes anywhere on the circuit
- Turn a circuit into a component and then use it in your design
- Build libraries of new components
- Hierarchical circuit design
- Switch from typical to worst case analyses
- Open multiple circuits at the same time
- Analyse in real time or step by step
- Set up PLA,ROM & RAM to your requirements

Prices: Access VISA Switch

B² SPICE £199 + VAT, **B² LOGIC** £199 + VAT Educational Discounts available (Subject to proof of status). Available on 3.5" disk or CD ROM. Both Windows 95/NT 32bit and Windows 3.X versions are available.

RD Research, Research House, Norwich Road, Eastgate, Norwich, Norfolk, NR10 4HA, Tel/Fax 01603 872331

Intelligent SYSTEMS

by Frank Booty

Chemicals react, machines break down, devices gum up, and feed stocks change. Get real – manufacturing is non-linear. Interruptions occur at random. Controlling – let alone scheduling – processes in the face of such non-linearities taxes conventional manufacturing control systems. Simultaneously, products and processes are becoming increasingly complex, cycle times and time to market are contracting, and product quality requirements become more demanding every day.

Using classic linear control techniques does not yield adequate results, particularly in an era of extreme competition. This justifies moving away from traditional linear algorithms and looking toward novel, intelligent strategies capable of coping with such non-linearities.

Artificial Intelligence

Enter artificial intelligence (AI). Vendors of process control equipment are developing hybrid AI systems handling a variety of AI techniques, including fuzzy logic, neural networks, genetic algorithms, and expert systems. AI is being applied to situations that have resisted control by conventional approaches that use binary logic or proportional, integral, derivative (PID) control, or both.

The conventional approach to process control uses PID components, which compare measurement and set point (desired) values. The difference between measured and desired – error – is the input to the controller. The proportional or integral components respond to the error, while the derivative component usually responds directly to the measurement. The proportional component varies the output percentage, depending on the amount of deviation from a set point. The integral component checks for these offsets and then compensates for them by shifting the proportional band up or down. The derivative component increases or decreases the output based on the rate of change of the controlled variables. The sum of the individual P, I, and D coefficients yields the control output.

Now, AI is complementing and sometimes replacing PID control. There are two broad uses of AI in manufacturing. In control and optimisation, the plant is working correctly, but the process control engineer is looking to increase production, speed up operations, and cut costs. In diagnostics, the process control engineer wants to know at the earliest moment when the plant is not operating correctly and how to resolve the problem quickly.

The right AI approach depends on the specific application. Diagnostics typically make use of backward chaining searches (reasoning from the conclusion backwards, using subgoals) in expert systems. Prediction uses forward chaining (reasoning from the known towards a solution). Rule and case based logic (expert systems) are usually not suitable to combinatorial problems such as planning and scheduling problems. Human knowledge is not broad enough for such huge problems, so the resulting expert systems are too slow.

Fuzzy logic mathematically models the world in the vague subjective way popularised by humans, i.e. it can handle 'hot', 'cold', 'early', 'late', and shades of grey, then convert them into numbers supporting conclusions. Fuzzy logic is well suited for applications needing tracking (e.g. set point control in noisy, non-linear, and time variant systems), tuning (handling conflicting constraints), and interpolating (dealing with multiple input, multiple processing levels).

Neural Networks

Neural networks are a step up from fuzzy logic systems. Neural nets are based on mathematical models that not only collect information but 'learn' (adapt to changes) from actual system operations. Neural networks help to identify patterns: if a process engineer knows what works but not necessarily why it works, neural networks can help. Neural network applications include forecasting, quality control, and production control.

There are then genetic algorithms. They not only adapt, they optimise. Genetic algorithms are good for tasks where training data is not available at each step and where it is not feasible to analytically derive a control rule, such as in an unstable system. It is valuable for back propagation when gradient information is not available at each feed-forward pass, and it is applicable to networks with unorthodox architectures, for example, cascaded connections.

Silicon AI comes as dedicated microprocessor (custom ASICs) with typically fuzzy logic in firmware. Such chips are fast (e.g., reasoning speeds of some 10 megaflips which is 10 million fuzzy logic processes per second or 10,000 times faster than an 8-bit microprocessor).

Fuzzy logic controllers – customisable microprocessors – can directly perform such calculations as derivatives and integrals. Units can include analogue inputs and outputs, various types of membership functions, hundreds of fuzzy variables, and up to 50 rules.

Embedded fuzzy systems can enhance PID control. A temperature controller can be a hybrid device, for example, containing two modules: a conventional feed forward PID controller and a fuzzy processor. The device's output is the sum of the PID and fuzzy outputs. The controller's response is based on size of error information and the

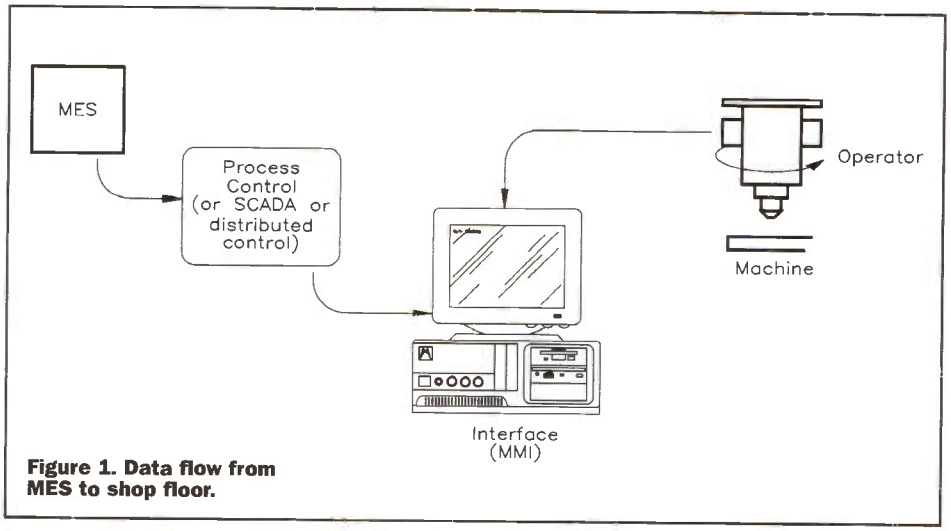

Figure 1. Data flow from MES to shop floor.

error's rate of change, which can be altered by adjusting three fuzzy parameters (increase fuzzy intensity – which governs the magnitude of the fuzzy logic effects on the final output; decrease fuzzy scale – which governs how big the 'error' range is; and a combination of the two – which corrects large overshoots and quickly stabilises disturbances).

The more common form of AI is in manufacturing software running on general purpose computers, especially for the many production processes involving low level dynamics that are not well understood, such as catalytic reactions in distillation columns. These multivariable, non-linear processes run continuously, but no analytic model fully describes their underlying dynamics. Neural nets can formulate the underlying connections needed to create a robust model of these production processes. With such models, users can intelligently change an operating variable in order to reach some process objective. Neural-based control systems are available for specific manufacturing applications.

Consider a neural control and optimisation package which is used to generate petrochemical products, cut costs, and meet environmental standards. An identification subsystem captures and stores 'interesting' process events while on-line. The events go into a database which becomes the training file for the secondary neural network model.

The control subsystem has three modules: 'target optimisation' computes optimal steady state set points (targets) based on economic and time factors; 'path optimisation' drives the process from its current state toward the target, while rejecting disturbances; and 'error feedback' manages prediction errors during sampling.

Real Time Expert System

A real time expert system is used as the controller's operator interface to provide dynamic testing and on-line monitoring. It also acts as a diagnostic tool for when the package cannot solve a problem effectively – because the predefined limits in the package are too tight or because the problem is impossible for the package to solve.

The real time expert system models heuristic and neural network reasoning in the form of rules, procedures, objects, and relationships between objects. Rules are written in a structured natural language syntax. The rules can be specific or generic, applying either to a particular object or to an entire range of objects within an object class. Rules can also be event driven (through forward chaining) to automatically respond whenever new data arrives. They can also be data seeking (through backward chaining) to automatically invoke other rules, procedures, or formulas. Rules can determine the values of referenced variables, or values checked at regular user specified time intervals can trigger rules.

The system uses object oriented technology: graphical objects representing production components can inherit properties and behaviours from multiple classes. Object libraries help to generate graphs, charts, dials, and tables of real time

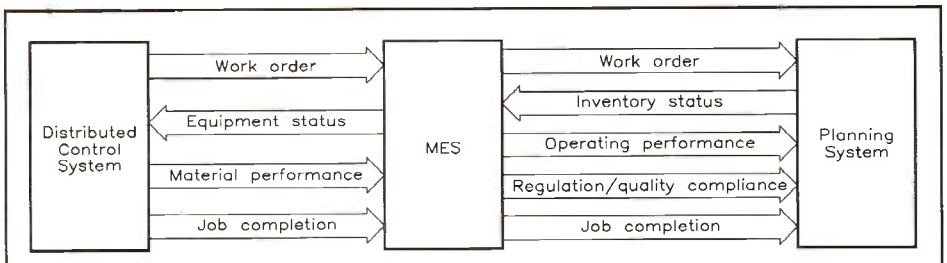

Figure 2. MES fits between planning and control systems.

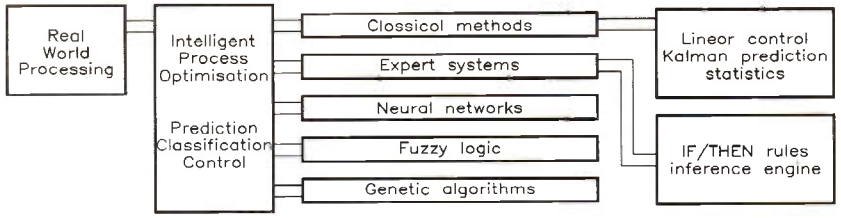

Figure 3. Hybrid control system.

data. Generic rules and heuristic procedures represent knowledge that applies to all objects of the same class. New instances of these objects automatically inherit the specified behaviour. The AI system is built on top of a client-server architecture that can invoke access privileges to the application for various levels of developers and users.

Interprocess communications between these elements and other plant-wide information, data collection, and control systems is through a standard interface (a separate process from the expert system). The resulting applications programming interface (API) manages protocol handling, data buffering, initial communications handshaking, and restoring after a break.

Aside from the benefits to the manufacturing application itself (increased throughput, optimised production, reduced waste, faster response), advances in AI benefit overall system implementation. Hands up then, all those ready and willing to hand over control of the factory to a bunch of algorithms. Yet, with manufacturing processes becoming more complex, there may be no choice. Hang loose, AI is proving it can do the job.

Execution Systems

Planning systems are good at accounting functions. Yet, neither material resource planning (MRP) nor manufacturing resource planning (MRPII) were designed to respond to real time data as it happens on a shop floor. There's a rift between planning and production stages. What's needed is an execution layer to ensure plans coming from the planning systems actually get done (and if they don't, to make sure the planning systems are notified and updated). Enter manufacturing execution systems (MES).

An MES manages the key elements of production (materials, equipment, personnel, process instructions, and facilities). It bridges a company's planning layer with its shop floor control layer, and distinguishes itself but its underlying attitude to the data it receives. It focuses on product rather than on materials or processes. Data is gathered on all productive resources, but the purpose is to historically track how products are being made on the floor.

The core of an MES is typically a SQL-capable relational database (holding material tracking, statistical quality control, equipment and labour tracking, product and raw material inventory, laboratory, and process data, and plant documents). The MES adds computer-aided systems engineering tools and often supplements this with document management tools, statistical process control tools, and statistical process control tools. An MES usually has a standard graphical user interface (GUI) and typically, builds on an open client-server architecture. The common networking topology is Ethernet running TCP/IP. High volume systems usually run on Unix servers (HP9000, Sun SparcStation and Digital Alpha based systems, with X-Windows or PC clients). Microsoft WindowsNT is also emerging as a viable MES platform. An MES interfaces to a distributed control system (DCS), Scada system or process control system, as well as planning systems all in real time. The DCS feeds data to the MES about job completion status, raw material performance, labour, materials and equipment. The MES then feeds data to the planning system on job completion, inventory, regulatory/quality compliance, and operating performance.

Without reliable real time data to work with, an MES is useless. The ideal real time application gathers data from physical sensors, not manual input. It's able to handle data at variable rates, and has many inputs and outputs, operating independently. The system also has to perform responsively and reliably. When it works properly, MES directly improves yields, equipment usage, and schedule performance. There are shortened lead times, higher returns on investment, and reduction of WIP inventories. Those adopting make to order, JIT and ISO 9000 methods need to have all the info to hand. MES helps. Yet, it's still a fledgling market. Just wait for more standards in object oriented programming and interoperability. Wrap in the demands for savings and higher profits. And then, there it is. A fine MES.

Electronics Principles 3.0

For Windows 3.1, '95 & NT.

If you are looking for an easy and enjoyable way of studying or improving your knowledge of electronics then this is the software for you.

Electronics Principles 3.0 now contains fifty-eight Windows and an extended range of nearly 300 fully interactive analogue and digital electronics topics Currently used in hundreds of UK and overseas schools & colleges to support GCSE, A-level, BTEC, City & Guilds and university foundation courses. Also NVQ's and GNVQ's where students are required to have an understanding of electronics principles.

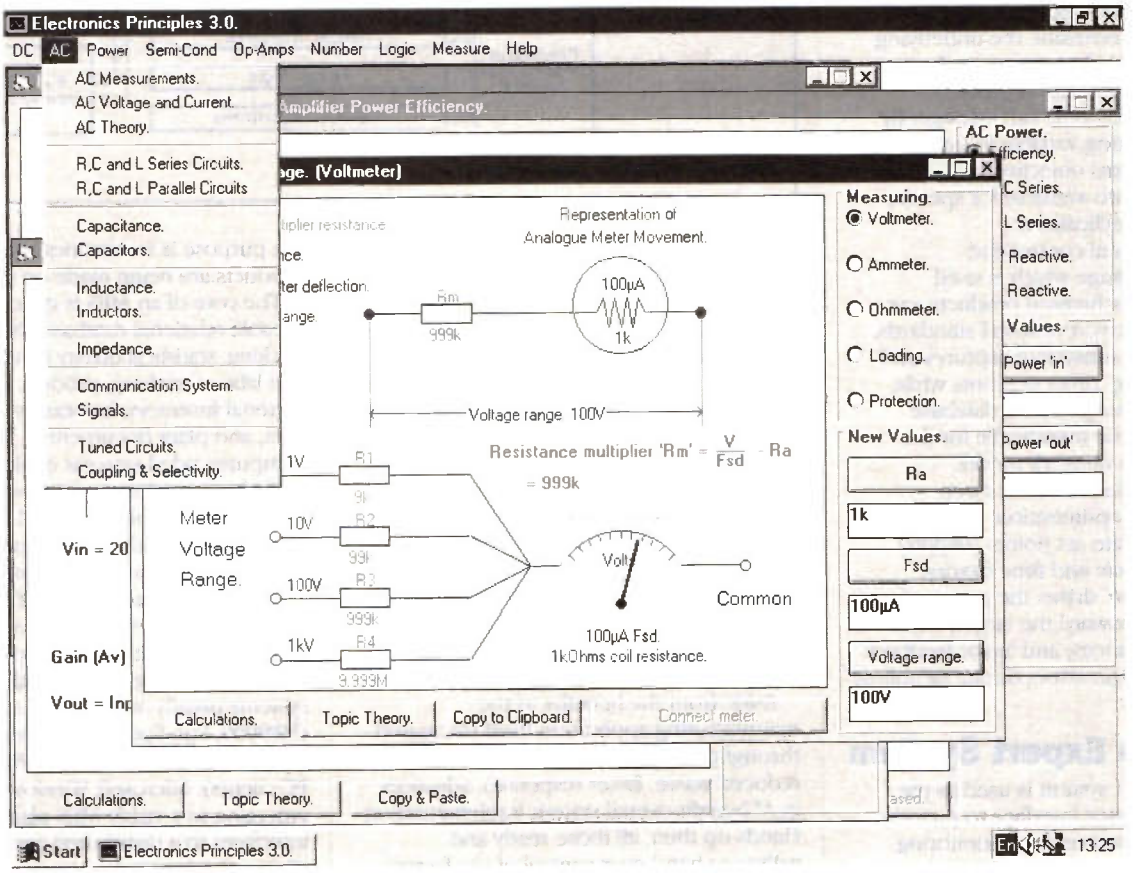

Other titles available.

Electronics Toolbox 3.0 £19.95*

Presents commonly used electronics formulae and routines in a way that makes calculations easy. Just select the topic, 'pop' in your values and find the result.

Mathematics Principles 3.0 £49.95*

Study or revise mathematics in what we believe is an interesting and enjoyable way. Nearly two hundred topics, including the GCSE syllabus with interactive, full colour graphics to enable 'learning through doing'.

Electronics Principles 4.0 £99.95*

Contains all of the extended version 3 and many more digital and analogue topics. Plus: Microprocessor & microcomputer operation, registers, arithmetic and logic unit, ROM, RAM etc. Addressing modes and full instruction set can be executed on the screen.

Inputs & outputs use electronics symbols.
Scientific notation avoided where possible to make numbers & calculations meaningful.
Experiment with standard textbook examples, even check your homework!
Hundreds of electronics formulae available for circuit investigation.
Multi-user site licence for schools & colleges.
Produce OHP slides & student handouts.

Complete Package just £49.95*

For more information, upgrades or software by return.

Telephone (01376) 514008.

EPT Educational Software. Pump House, Lockram Lane, Witham, Essex. UK. CM8 2BJ. Tel/Fax: 01376 514008.
E-Mail sales@eptsoft.demon.co.uk Web pages http://www.octacon.co.uk/ext/ept/software.htm
* UK Please Add £2 per order for post & packing + VAT. Make cheques payable to EPT Educational Software.
Switch, Delta, Visa and Mastercard orders accepted - please give card number and expiry date.
OVERSEAS ORDERS: Add £2.50 postage for countries in the EEC. Outside EEC add £3.50 for airmail postage.

RESEARCH NEWS

by Dr. Chris Lavers

The Fabrication of Optoelectronics Integrated Planar Glass Waveguide Sensors

Optoelectronics is the synthesis of optics with techniques from the electronics industry and is rapidly developing within the areas of signal processing, telecommunications and sensors. Integrated planar optical waveguide sensors are extremely sensitive to variations in sample environment, such as absorption, refractive index, or fluorescence. Variations in such optical parameters may generate rapid modulation of visible and near infra-red radiation travelling within shallow glass optical waveguides, offering the possibility of continuous on-line integrated sensors for both clinical and industrial applications.

The ability of glass to transmit or 'guide' light has been known for many centuries. However, it is only during the last quarter century that it has been possible to fabricate specialist glasses of exceptional transparency and purity and to use them to act as the basic building block upon which to design optical waveguide structures that are capable of surviving expected working conditions.

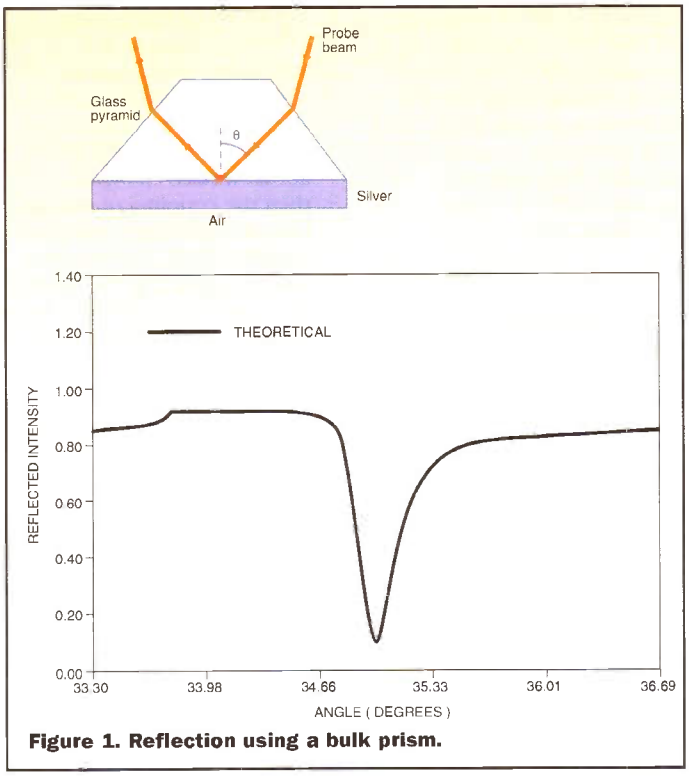

Figure 1. Reflection using a bulk prism.

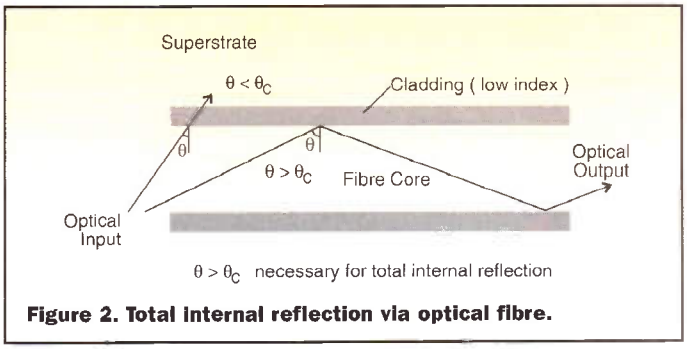

Figure 2. Total internal reflection via optical fibre.

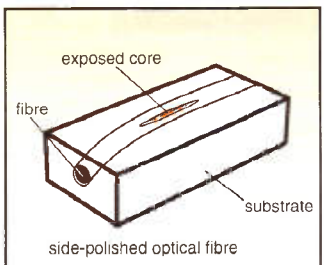

Figure 3. Side-polished optical fibre.

All guided optical sensing techniques are based on the simple principle of total internal reflection of light. When a light ray inside a transparent material approaches the interface between that material and another transparent surrounding medium, the ray is internally reflected if it approaches the surface at an angle greater than the critical angle, θ_C. For any interface, $\sin \theta_C = n_2 / n_1$, where n_1 is the refractive index of the waveguide material, n_2 is that of the surrounding or cladding medium and $n_1 > n_2$. Early work on total internal reflection utilised bulk prisms, allowing the probing of thin films deposited onto the prism surface and of the surrounding fluid or analyte (see Figure 1). If the bulk prism is replaced by a long optical fibre, having a high refractive index core and a low refractive index cladding, light may probe the fluid interface over extended distances using total internal reflection, as shown in Figure 2.

The electromagnetic field of the guided light actually extends upwards (or penetrates) on the order of a wavelength into the surrounding fluid medium and may interact with the fluid in this region. Hence, if an optically absorbing material is then placed in contact with the fibre core, the electromagnetic wave travelling in the waveguide will be attenuated significantly if it has a long interaction length. Several traditional optical devices are used a for sensing function on this basis.

The sensitivity of total internal reflection spectroscopy of a fibre to changes in sample environment depends critically on the field penetration at the overlayer. To control this interaction, the fibre core is exposed by polishing (see Figure 3) and to enhance the field interaction further, the length of core exposed may be increased. The polishing process produces a flat surface on an otherwise curved fibre, which is desirable for thin film and chemical deposition. Unfortunately, the polishing process is quite labour intensive and time consuming, which is a serious limitation in the mass production of devices. Thus, planar waveguides (refer to Figure 4) offer the advantages of inherent surface flatness, long path length and direct access to the exposed waveguide 'core' in the surface of the glass.

In a planar waveguide, as in a fibre system, the peak of the electric field is close to the centre of the waveguide with the 'tail' of the field penetrating into the adjacent medium, as shown in Figure 4. Planar sensors differ only in the way we harness the electric field's penetration of the surrounding medium. To make specific sensors, it is necessary to deposit metal and dielectric layers, chemically active films, or apply electric fields between the metal layer and an electrode in solution which has been demonstrated recently [1]. Any changes in the optical properties of the thin film or surrounding solution will affect the attenuation of the incident input optical wave power. Hence, guided wave optics combined with thin film deposition technology, which are ideally suited to flat planar substrates, are therefore the two basic elements necessary for integrated optics, leading to the development of single chips containing optical components, such as lasers, modulators, detectors, polarisers and lenses. The transmission of a light wave from one integrated

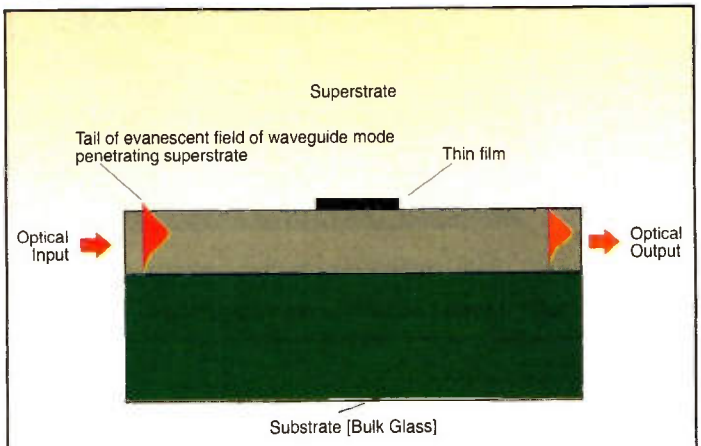

Figure 4. Planar waveguide with attached thin film.

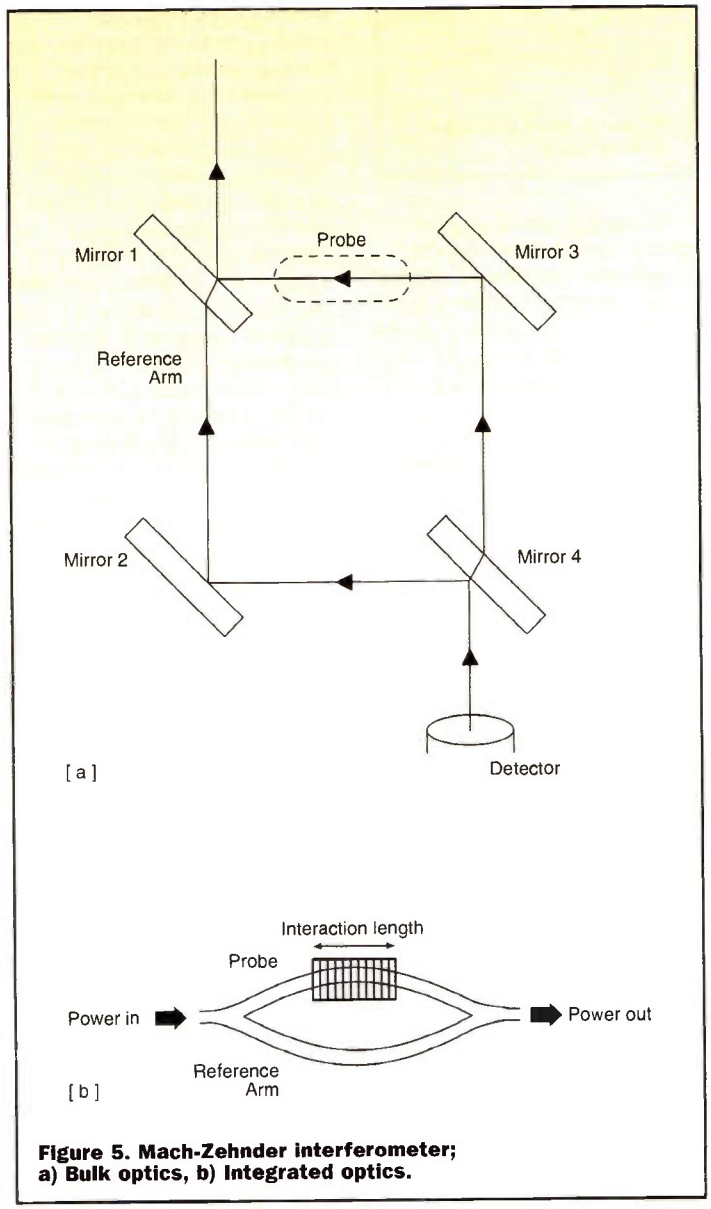

Figure 5. Mach-Zehnder interferometer; a) Bulk optics, b) Integrated optics.

component to another then becomes a problem of interconnecting two or more waveguides together.

We will limit our discussion to the fabrication of simple planar glass waveguides, but increased sensitivity of the planar waveguide system may be achieved using an integrated Mach-Zehnder interferometer (see Figure 5) [2]. The basic principle involves splitting the incident coherent monochromatic light beam into two beams of equal intensity. One arm of the Mach-Zehnder system is allowed to interact with the sample under examination (the probe) and both beams are then recombined together where they interfere. For a perfect interferometer, the interference is determined only by the phase difference between the two beams (probe and reference), and thus changes in the local dielectric constant in one of the branches (the probe) will be observed as a change in the phase of the wave in that branch and hence, in the interference signal produced. The need for mirrors is removed in the integrated system, because the light path is controlled by the waveguide channels and the function of the classical beam splitters in conventional bulk optics is replaced by the Y-junctions.

A recent development has been in the use of grating structures on planar waveguides, which can be coated with thin chemically sensitive coatings and are being developed for biochemical sensors [3]. Such systems can respond to the formation of a sub-monolayer films formed by adsorption, and binding of antibody molecules to Dynamic responses on a timescale of seconds have been resolved.

Fabrication

Fabrication is, without doubt, the most important process in the manufacture of all integrated optical waveguides. Present planar waveguide devices for sensing applications are formed in either cheap soda-lime glass (containing iron and copper impurities) or BK-7 glass substrates (a higher quality glass but more expensive) by a simple fabrication process [4-5]. The fabrication process may be readily tailored to meet differing design specifications.

Typically, the process involves:

Photolithography – the etching of channels in an aluminium mask on the glass substrate (refer to Figure 6).

Ion exchange – glass samples are immersed in a molten salt bath, usually maintained at several hundred degrees Centigrade, for times varying in excess of several tens of minutes to several hours. Ions in the exposed glass substrate are replaced by different ion species from the molten salt, creating a region of either higher or lower refractive index in the exposed surface than compared within the covered bulk glass. By placing a second photolithographic mask on top of the waveguide and immersing the sample in a different molten salt, it is even possible to add secondary features, such as a spatially periodic grating within the waveguide, creating a zebra-crossing type effect [6].

Polishing – many waveguides on multiple substrates may be end polished together at once; this is necessary to achieve efficient light coupling from an optical fibre, or lens, into the sample and then the metal mask removed.

Evaporation – a thin film of appropriate thickness, such as metallic silver, may be evaporated either directly onto the waveguide (see Figure 4) or onto a second 'sandwiched' layer, previously deposited on top of the waveguide.

One recent development has been the fabrication of an integrated optical waveguide adsorption sensor. Light is coupled into a waveguide of only 4μm width, onto which a thin silver film has been deposited previously. By the application of an electric field between the film and solution, it is possible to modulate the absorption and desorption of charged chemical species onto the waveguide surface and hence change the attenuation of the transmitted beam through the waveguide (as depicted in Figure 7) [7].

The attenuation may be enhanced by the transfer of energy between the waveguide mode and a lossy surface wave existing at the metal/fluid surface. If the chemical composition at this surface changes, then the coupling of energy between the waves will alter significantly. As the negative voltage applied to the silver film is increased further, more positive ions are attracted near to the film; this results in even greater changes in transmission observed within only a few seconds. This kind of device will permit rapid in-situ determination of various chemical species; one such application is intended to be the monitoring of pesticide and herbicide levels (such as atrazine, simazine and aldrin) in drinking water.

IBM is currently looking at increasing the number of different sensing elements on a single substrate by

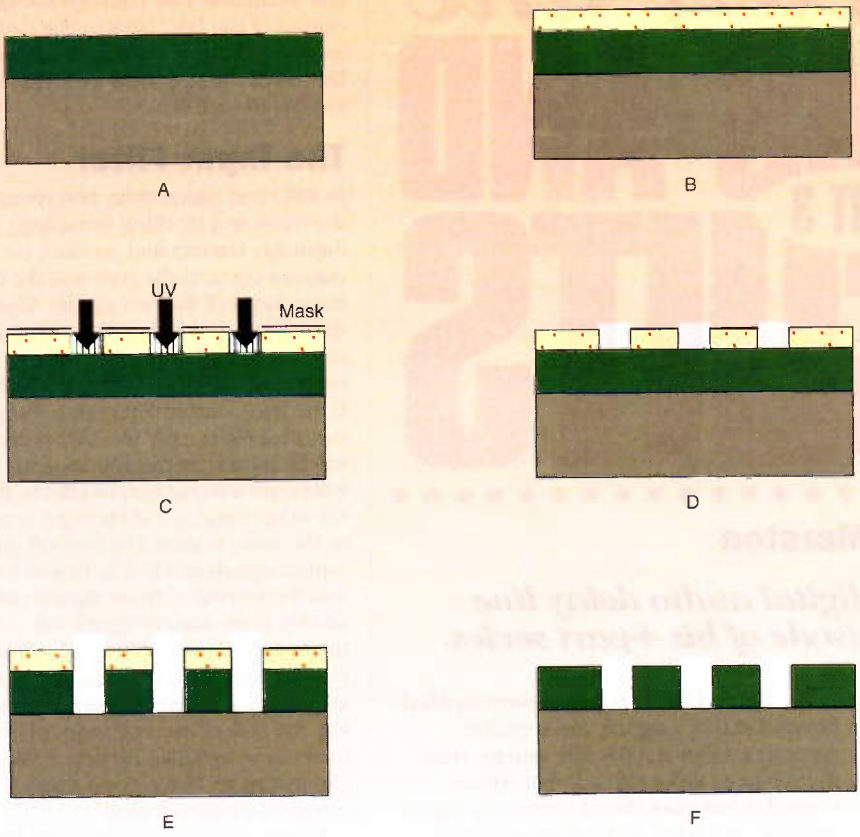

A Evaporation of a metal film
B The deposition of photoresist
C Exposure of the dried sample to Ultra-Violet light
D Development of the exposed photoresist
E Etching of exposed aluminium
F Final removal of unexposed resist

Figure 6. Photolithographic process.

decreasing individual element size. The printing of patterns on surfaces using light has been a key element of optical processing, and the principles have changed little since their first inception with mass-produced semiconductor devices of the sixties and seventies. Current ultraviolet mask exposure routinely achieves a sharp image resolution of about 1μm. Image sharpness on a substrate is controlled by light diffraction as it propagates through the mask aperture; the narrower the aperture, the more diffraction which will occur and hence greater 'blurring' of the image on the substrate. The amount of diffraction is also related to the wavelength λ of light used (diffraction ∝ λ) and hence, a reduction in the exposure wavelength will improve image resolution. To achieve sub-micron resolution, IBM in New York and Vermont is examining the use of short X-ray wavelengths between 0·5-4·5nm. It is expected that by appropriate choice of the operating wavelength and correct mask design, X-ray lithography will reduce feature size to as little as 50nm.

If X-ray photolithography is combined with the technology to add secondary features such as gratings within planar waveguides (formed by secondary thermal diffusion of silver into existing potassium doped ion-exchanged waveguides), then the rapid development of advanced waveguide sensors permits even greater scope for multiple sensor design on a single optical chip.

Optical-based technologies providing fully automated sensing system for monitoring based on single-chip or so-called monolithic integrated multisensors may form the basis of novel and highly functional sensing systems benefiting a large number of potential applications, including both environmental monitoring and medical diagnosis.

References

[1] C. R. Lavers, R. D. Harris, S. Hao, J. S. Wilkinson, K. O'Dwyer, M. Brust, D. J. Schiffrin, Journal of Electroanalytical Chemistry, Vol. 387, No.1, pp.2-11,1995.

[2] G. Gauglitz and J. Ingenhoff, Ber. Bunsenges. Phys. Chem. 95 (1991) pp.1558-1563, No.11.

[3] W. Lukosz and K. Tiefenthaler, Sensors and Actuators, 15 (1988) pp.273-284.

[4] J. E. Gortych, D. G. Hall, IEEE J. Quantum Electron., Vol. QE-22, pp.892-895 (1986).

[5] T. G. Giallorenzi, E. J. West, R. Kirk, R. Ginther, R. A. Andrews, Applied Optics, Vol. 12, No.6, pp.1240-1245, (1973).

[6] J. Jackel, Applied Optics, Vol. 29, pp.472-5, (1988).

[7] C. R. Lavers, C. Piraud, J. S. Wilkinson, M. Brust, K. O'Dwyer, D. J. Schiffrin, OFS9 Firenze, Italy, pp.193-196 (4-7th May 1993).

ELECTRONICS

For more up-to-date electronics news stories, see News Report on pages 2 to 4.

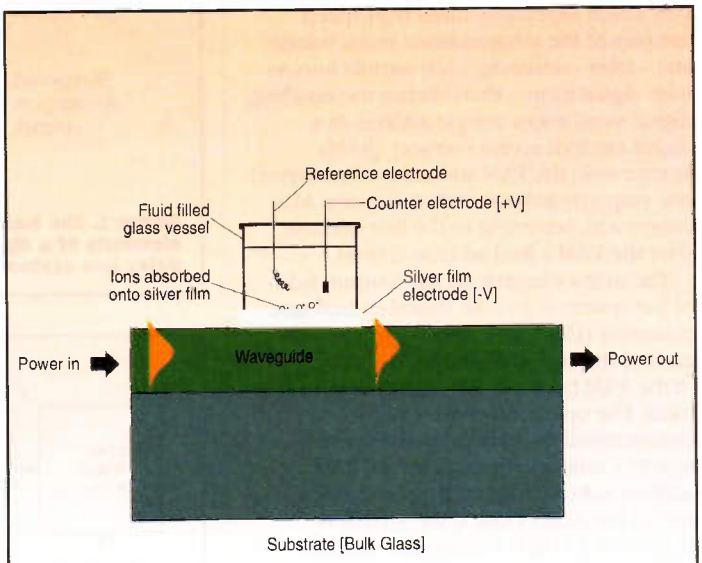

Figure 7. Aqueous planar waveguide probe.

Audio Delay-line SYSTEMS AND CIRCUITS PART 3

by Ray Marston

Ray Marston explains digital audio delay line principles in this third episode of his 4-part series.

The first two episodes of this new 4-part series explaining audio delay line basic principles, described the operation of modern analogue 'bucket brigade' delay line (BBD) ICs, and presented a selection of practical BBD analogue delay line circuits. This month's episode looks at modern digital delay line systems and explains their operating principles.

Digital Delay Line Basics

Electronic delay line systems can be built using either analogue bucket brigade delay line (BBD) ICs or digital ICs. Each system has its own particular set of advantages and disadvantages. Figure 1 shows, in its very simplest form, the basic elements of a digital delay line system, which is best described here in terms of its 'input' and 'output' sections.

On the 'input' side of this system, the analogue input signal is first applied to an n-bit analogue-to-digital converter (ADC) unit which repeatedly takes high-speed samples of the instantaneous input voltage and – after converting each sample into an n-bit digital form – then latches the resulting digital word into a unique address in a digital random access memory (RAM) storage unit; the RAM address is incremented one step upwards on each successive ADC conversion, returning to the first address after the RAM's final address is used.

The major element on the 'output' side of the system is an n-bit digital-to-analogue converter (DAC) unit, which can convert each of the stored digital words (values) of the RAM back into its original analogue form. The operation of the DAC is synchronised to that of the ADC by the system's timing generator, but its RAM address selector follows x-places behind that of the ADC. Thus, if the system is clocked at a 10kHz (100µs) rate and the ADC's 'x-places' value is 2,000, the system's analogue output signals actually appear 200ms after they are applied to the system's input, and the system thus functions as a useful audio-frequency delay line.

The Figure 1 circuit is greatly oversimplified. Figure 2 shows a slightly more realistic version of a digital delay line system. Here, the analogue input signal is first passed through a low-pass filter, to eliminate signal 'aliasing' problems, and is then applied to a sample-and-hold unit that is clocked in synchrony with the rest of the basic digital delay line. The sample-and-hold unit effectively takes a high-speed snapshot of the instantaneous analogue input voltage each time it is clocked, thus presenting the unit's ADC with a stable input voltage sample while it performs its n-bit analogue-to-digital conversion. The results of the A-to-D conversion are then latched into the RAM, where they are later accessed and converted back into analogue form by the DAC, which passes them on to the outside world via another low-pass filter that eliminates any clock breakthrough signals and simultaneously converts the quantised output of the DAC back to the clean analogue form of the original input signal. Details of the individual elements of this system are as follows.

The Input Filter

In BBD and digital delay line systems, the input and clocking (sampling) signals inevitably interact and produce unwanted outputs equal to the sum and the difference frequencies of the two signals. Thus, if a delay line is fed with a 3kHz input and is clocked at 10kHz, the line will produce output signals of 3, 7, 10 and 13kHz. If the line's output filter has a sharp cut-off at 6kHz, only the 3kHz signal will be passed by the system, and there will be no adverse output effects. If, on the other hand, a 4·9kHz input is applied to the same system, the line will produce output signals at 4·9, 5·1, 10 and 14·9kHz, and the second of these signals (which is known as an aliasing signal) will pass easily through the output filter and will also interact with the 4·9kHz signal to produce an annoying 200Hz 'difference' tone. It is the task of the unit's input filter to act as an anti-aliasing device, by eliminating all input signal above a designed frequency limit.

A basic law of electronic delay line design states that the system's clock frequency must be at least double the upper cut-off frequency of the input filter, but in practice, this ratio should be made as large as possible, to help minimise signal aliasing problems. Thus, if the above mentioned delay line had a simple low-pass 5kHz input filter and a 20kHz clock, an input of 4·9kHz would produce output signals of 4·9, 15·1, 20 and 24·9kHz, and all but the 4·9kHz signal would fall well beyond the pass range of the system's filter units.

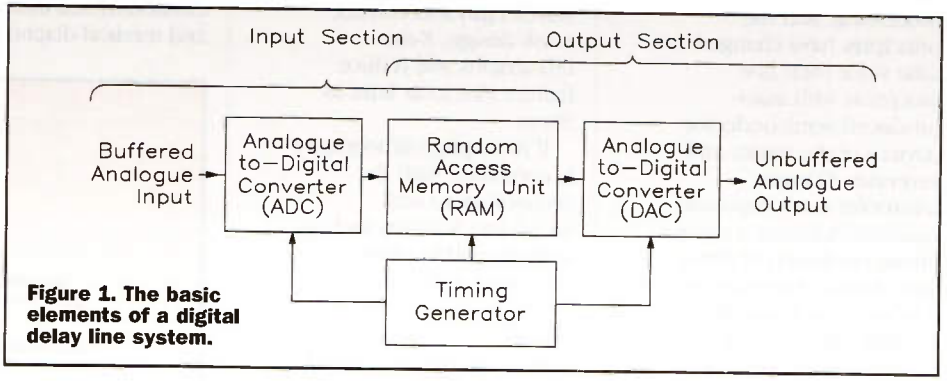

Figure 1. The basic elements of a digital delay line system.

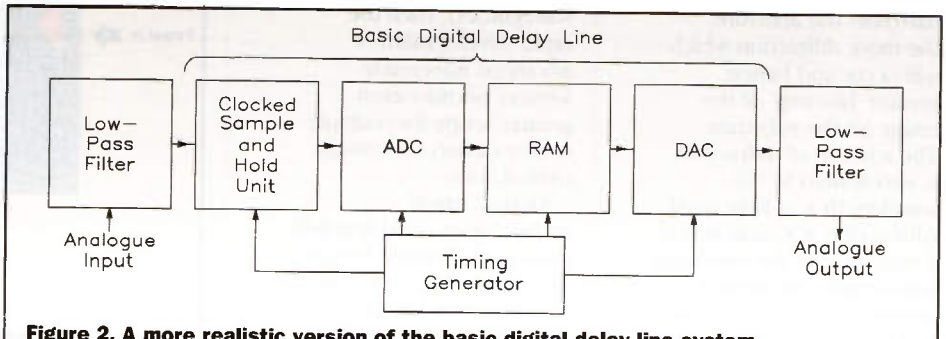

Figure 2. A more realistic version of the basic digital delay line system.

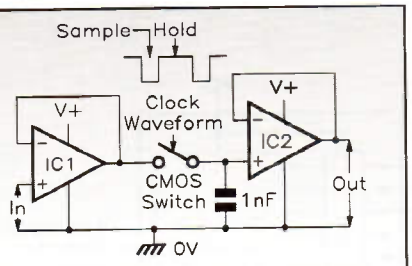

Figure 3. A practical sample-and-hold circuit using an IGFET op-amp.

The Sample and Hold Unit

The sample-and-hold unit's task is to take a sequence of high-speed snapshots of the instantaneous analogue input voltage and hold each one steady for a few dozen microseconds while it is processed by the system's ADC unit. Figure 3 shows a practical sample-and-hold circuit, in which IC2 is an IGFET-type op-amp. Both op-amps are wired as unity-gain voltage followers, with IC1 acting as an input buffer. IC2 has a 1nF capacitor wired between its non-inverting input pin and ground, and has its input connected to IC1's output via a clocked CMOS bilateral switch. When the switch is closed (during the sample period), IC2's output follows the input signal, but when the switch opens (at the start of the hold period), the prevailing instantaneous input voltage is stored in the 1nF capacitor and appears at IC2's output as a stable voltage for the duration of the 'hold' period. Note that to give IC2 an adequately high input impedance (at least 10,000MΩ), the circuit's PCB must provide IC2's input pin with a printed guard ring that is bootstrapped directly from IC2's output.

Figure 4 shows the basic sample-and-hold waveforms obtained from a 1kHz sinewave that is centred on +1·00V and is clocked at a 13·4kHz rate. During each clock cycle, the output waveform (which is shaded grey) follows that of the input during the 'sample' period, but locks it into a steady state during the 'hold' period. Note here, that the output of the delay line's DAC has a shape similar to that shown, but is converted back to the original sinewave input shape by the line's low-pass output filter.

The Analogue-to-digital Converter (ADC)

The ADC's task is to convert the steady output voltage of the sample-and-hold unit into a representative n-bit digital (binary) code word that can then be latched into the delay line's RAM. Figure 5 shows the basic elements of a typical ADC IC. The IC usually incorporates a precision bandgap voltage reference (normally 2·55V in an 8-bit ADC), which can be used to set the IC's full-scale voltage reading value. Most modern ADCs use a fast logic-driven successive approximation method of A-to-D conversion, in which the converter is driven by a fast (about 1MHz) clock waveform and the conversion process is started by applying a pulse to a Start conversion terminal (in some ADCs, the clock generator and/or the sample-and-hold unit are/or built into the IC). The conversion process usually takes one clock cycle per bit plus another two processing cycles, i.e., 10 cycles on an 8-bit ADC, 14 cycles on a 12-bit ADC. When the conversion is complete, a Conversion complete terminal changes state and the n-bit digital conversion code is locked into the IC's output terminals.

The most important basic parameter of any fast ADC is its bit-size. Most modern ADCs have 8-bit or 12-bit outputs; a few have a 10-bit output, and the more expensive types have a 16-bit output. The IC's signal-to-noise (S/N) ratio, useful dynamic operating range and signal resolution are determined by its bit size. An 8-bit ADC can generate 256 (2^8) different 8-bit binary codes, and if set to read 2·55V full-scale, will generate a '11111111' code with an input of 2·55V or '00000000' with an input of 0V, and will have a discrimination (the analogue voltage difference between adjacent code steps) of 10mV. Thus, in this example, the converter has a discrimination of 0·4% of reading at 2·5V input, 4·0% at 0·25V (at –20dB relative to full scale), and 40% at 0·025V (at –40dB).

The matter of the ADC's 'useful dynamic range' in AC-signal processing applications is best explained as follows, using the above-mentioned 8-bit ADC as a working example. This 8-bit ADC has a discrimination of 10mV

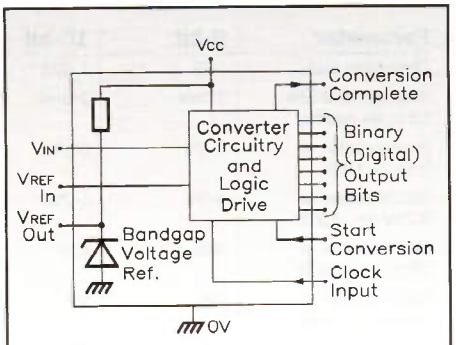

Figure 5. Basic elements of a typical analogue-to-digital converter IC.

and can handle absolute maximum signal swings of 2·55V peak-to-peak, which it can record in terms of 256 distinct step-voltage levels (including 0V). If this input voltage is reduced by 20dB (to 255mV Pk-to-Pk), the ADC can record the signal in terms of only 26 step levels, and if it is reduced by 40dB (to 25·5mV), it can record it in terms of only 3 step levels, which is the absolute minimum number of levels needed to enable a moderately accurate (but highly distorted) version of the original signal to be reconstructed via a DAC and filter network. Consequently, if the input signal is reduced to below the 20mV level, the ADC will be unable to record it in a useful (greater than 2 step levels) form. This ADC thus has an absolute maximum useful AC dynamic range of 2·55V/0·02V, which translates into 42dB.

In practice, the maximum useful AC dynamic range of an ADC is directly proportional to its bit size, in the ratio 6dB per bit, minus 6dB, and can be simply calculated from the equation:
Useful dynamic range $= 6 \times (n - 1)$ *db*,
Where n is the ADC's bit size. Thus, an 8-bit ADC has a maximum useful AC dynamic range of 42dB, a 12-bit ADC has a range of 66dB, and a 16-bit ADC has a range of 90dB.

Table 1 lists the above data in tabular form, as applicable to 8-bit, 10-bit, 12-bit and 16-bit ADCs; exactly the same data also applied to DACs. Note, however, that the listed 'useful dynamic range' figures are the absolute maximum attainable, and must be reduced by a further 6dB if a good low-distortion, low-level performance is required from the ADC.

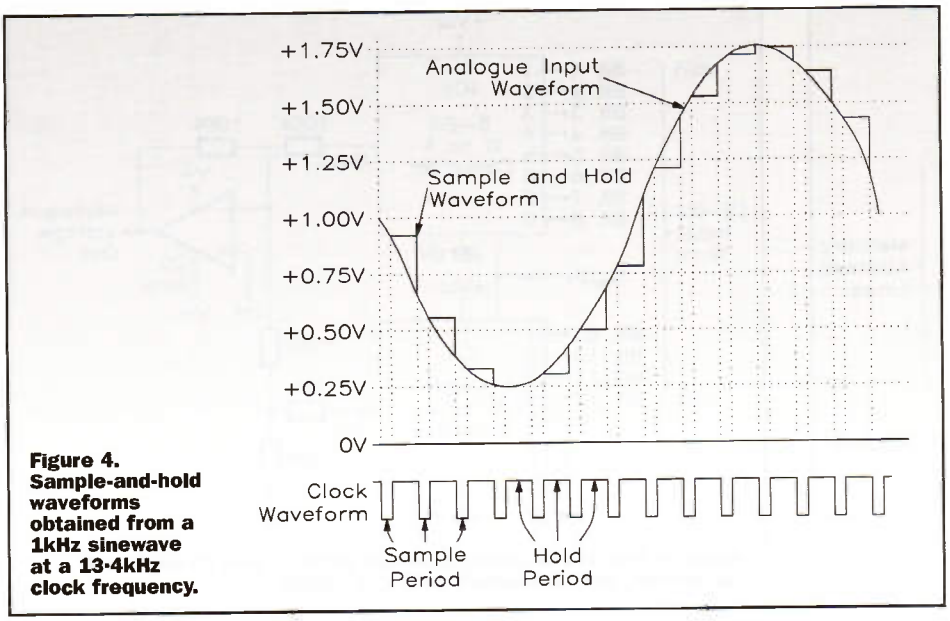

Figure 4. Sample-and-hold waveforms obtained from a 1kHz sinewave at a 13·4kHz clock frequency.

The Random Access Memory (RAM)

The RAM's task is to act as a temporary store for the digital data that is generated by the ADC. RAMs are available as either Static (SRAM) or Dynamic (DRAM) devices. Each bit of data that is fed into a SRAM is stored in an individual flip-flop cell, and all data is retained until it is overwritten or the SRAM's power supply is interrupted. Each bit of data that is fed into a DRAM is stored as an electrical charge in a small capacitor cell, and decays rapidly (in a few milliseconds) unless refreshed at frequent intervals. DRAM is easier to construct than SRAM, and is thus significantly cheaper than SRAM in large-memory-sized ICs.

In most 'audio' digital delay line applications, relatively little RAM space is required. SRAM and DRAM ICs are available

Parameter	8-bit	10-bit	12-bit	16-bit
Conversion steps	256	1,024	4,056	65,536
Step size at 2·56V full scale reading	10mV	2·5mV	0·625mV	39μV
Discrimination at 2·5V (= 0dB)	0·4%	0·1%	0·025%	0·0016%
Discrimination at 0·25V (= –20dB)	4·0%	1·0%	0·25%	0·0156%
Discrimination at 25mV (= –40dB)	40%	10%	2·5%	0·156%
Discrimination at 2·5mV (= –60dB)	N/A	N/A	25%	1·56%
S/N ratio (dB)	48	60	72	96
Useful dynamic range (maximum, dB)	42	54	66	90

Table 1. Table listing the basic characteristics of modern 8, 10, 12 and 16-bit analogue-to-digital converters (ADCs); the same data is applicable to digital-to-analogue converters (DACs).

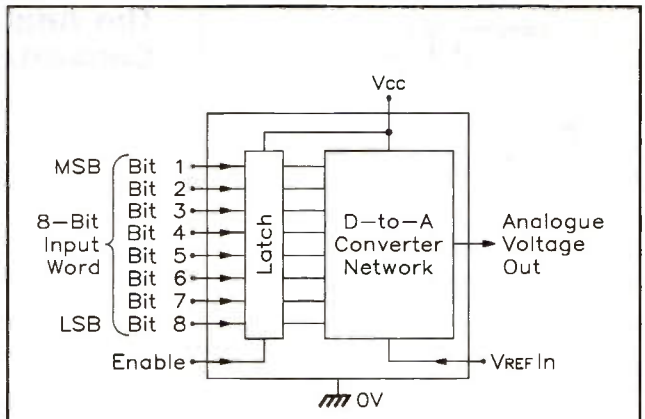

Figure 7. Basic usage elements of a latched 8-bit parallel-input, voltage-output DAC.

in standard memory sizes of 4,096-bit (4K), 16,384-bit (16K), 65,536-bit (64K), 262, 144-bit (256K), and 1,048,576-bit (1M), and the maximum delay (in seconds) given by a digital delay line is given by the formula:
Delay = memory size/(f_{CLK} × bit-size)
Where 'bit-size' refers to the system's ADC. Hence, a 12-bit system that uses a 20kHz clock gives a maximum delay of 68ms from a 16K RAM, 273ms from 64K, 1,092ms from 256K, or 4·37 seconds from a 1M RAM. Most of these delay times are greatly in excess of normal needs, so the easiest and cheapest way to design a modern digital delay line system is to simply use a clock frequency that is at least four times greater than the required system bandwidth, thus minimising the system's filtering requirements, and to use lots of easy-to-use and modestly priced static RAM (SRAM).

Figure 6 shows the basic usage elements of a typical SRAM. This particular diagram applies specifically to a 16K device that is organised as a 2,048 × 8-bit memory, i.e., it has 2,048 addresses (each with its own 11-bit address code) that can each hold one 8-bit word that is applied or accessed (written or read) via eight bidirectional input/output (I/O) lines; the lines have 3-state outputs that are controlled via the NOT-OE terminal. To write an 8-bit data word to the SRAM, the desired memory location is selected via its 11-bit address code, the data word is applied to the eight I/O lines, the NOT-WE pin is tied low, and a negative-going clock pulse is applied to the NOT-CS terminal. To read a stored data word, its memory location is selected via its 11-bit address code, NOT-WE is tied high and NOT-OE is tied low, and a negative-going clock pulse is applied to the NOT-CS terminal, at which point, the data word appears on the I/O lines.

The Digital-to-analogue Converter (DAC)

The DAC's task is to sequentially read n-bit digital (binary) data words from the RAM and convert them back into their original analogue form. The DAC's characteristics must match those of the systems ADC in terms of bit-size and scaling, and the basic data listed in Table 1 is applicable to both DACs and ADCs. DACs come in a variety of basic types and bit sizes. Their analogue outputs may take the form of a voltage or a current (that can be converted to a proportional voltage via an external op-amp), their n-bit inputs may be applied in parallel form (to n input pins, which may or may not be connected to internal latches) or in serial form (to a single input pin), and the DAC may or may not be microprocessor compatible.

The ideal DAC for use in individually designed digital delay line systems is the simple voltage output type that has parallel inputs with internal latches. Figure 7 shows the basic usage elements of a typical 8-bit DAC if this type. The IC requires a V_{REF} input with a value equal to the desired full-scale analogue output voltage (normally 2·55V in an 8-bit DAC). Usually, the IC's input latch is transparent when the ENABLE pin is low (i.e., the IC gives a direct analogue output voltage equivalent of the applied 8-bit input word under this condition), and latches and holds the data when the ENABLE pin is taken high.

It is possible to wire two 8-bit DACs so that they act as a crude but useful DAC that will accept any word size in the range 9 to 16 bits. Figure 8 shows two non-latched voltage-output 8-bit DACs and an op-amp adder used to make a simple 12-bit DAC. The eight most significant bits (bits 1 to 8) of the input word are applied to IC1, and the remaining lower-order bits (bits 9 to 12) are applied to IC2's four most significant inputs; IC2's four unused (least significant) input terminals are grounded. The analogue output of IC1 is fed directly to one input of the 2-input unity-gain op-amp adder, and the output of IC2 is fed to the other input of the adder via a 256:1 attenuator made from a 10kΩ and 39Ω resistor. Note that this

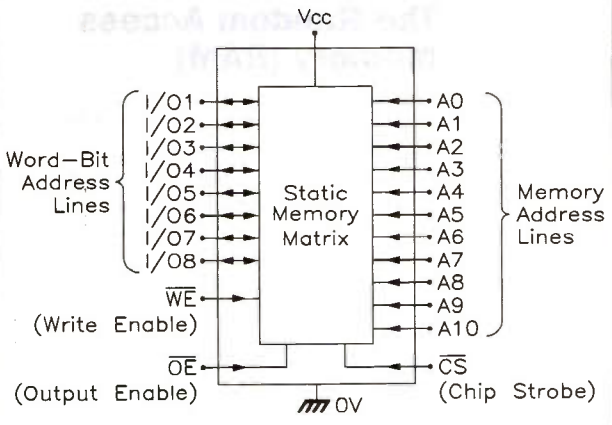

Figure 6. Basic usage elements of a typical static RAM (SRAM) IC.

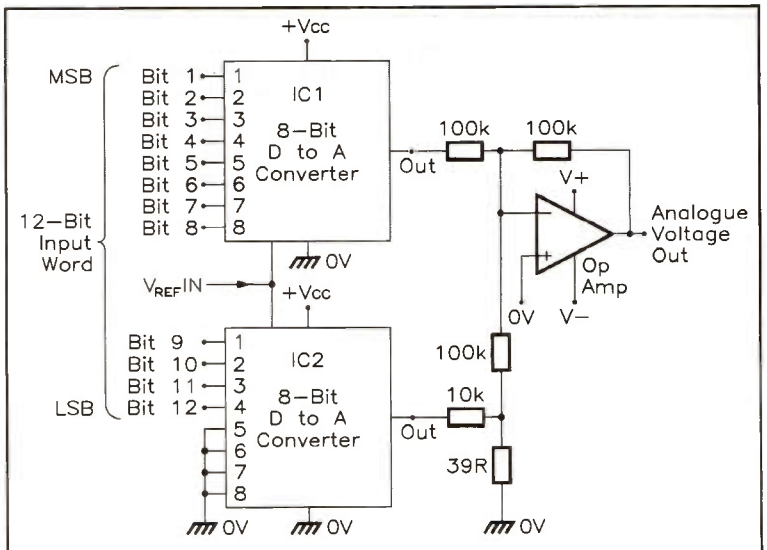

Figure 8. Way of connecting two 8-bit DACs to give 12-bit D-to-A conversion, with an inverted analogue output.

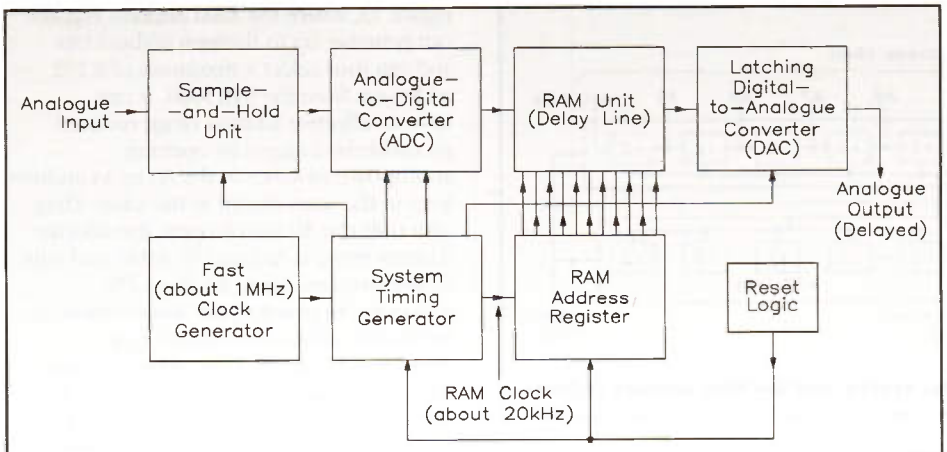

Figure 9. Basic elements of a digital delay line's timing generator system.

converter gives an inverted output, and that it is far less accurate than a dedicated 12-bit DAC but is sufficiently accurate for use in all practical delay line applications.

The Output Filter

The output of the DAC is a quantised version of the original analogue input signal, and has a step-like form similar to that shown in Figure 4. The output filter's task is to restore the waveform's original smooth shape by filtering out its high-frequency 'step' components, and to remove any residual clock breakthrough signals from the system's final output. If the clock frequency is at least four times greater than the system's designed bandwidth, the output filter can be a simple low-pass type. If the clock frequency is only two times greater than the system bandwidth, the output filter may have to be a well designed 4th-order or better low-pass type.

The Timing Generator

The timing generator's task is to synchronise the operations of the delay line's main units. Figure 9 shows the basic elements of the timing generator system. It consists of a fast clock generator that drives the system's main timing generator, which in turn controls the actions of the sample-and-hold unit and the ADC and also produces the clock signals for the RAM address register and the DAC. The main timing system and the RAM address register can be reset to zero (at initial switch-on or on request) via a logic unit. Figure 10 shows the basic form of the main set of timing waveforms. In this particular case, the ADC is an 8-bit unit and the 20kHz RAM clock is derived from a 640kHz master clock (via a divide-by-16 counter); the two clocks are thus synchronised. This delay line system's basic sequence of operations is as follows.

At the start (on the rising edge) of each new 20kHz RAM clock cycle, the RAM address is incremented one step upwards, and its contents are inspected and latched by the DAC, which converts them into an analogue output. Simultaneously, the sample-and-hold unit is switched into the HOLD mode, and the ADC starts its A-to-D conversion operation which (in the case of an 8-bit ADC) takes ten 640kHz clock cycles. At the end of these ten cycles, the ADC produces a Conversion complete signal, and the ADC's 8-bit output is then latched into the RAM's current address. A few 640kHz clock cycles later, the sample-and-hold unit is switched into the SAMPLE mode, completing the basic sequence of operations, which is repeated in each 20kHz RAM clock cycle.

Note from the above description that, if the RAM has an effective length of 'x' addresses, the DAC will initially find each address empty until it reaches its x+1 RAM-clock cycle, at which point, it will find the data that was written to that address x clock cycles earlier. The system thus acts as an x/f delay line, where f is the RAM clock cycle frequency.

Figure 11 shows the basic form of the clock generator system and the RAM address register. Note that the fast (640kHz) clock generator is a VCO type such as that used in a 4046B CMOS IC, thus allowing the delay line to be used in vibrato, phasing and flanging applications, etc. The 640kHz signal is reduced to 20kHz via a 5-stage ripple counter, which drives the RAM address register, which in this case, is a 10-stage ripple counter and thus produces an 11-bit output that can select a maximum of 2,048 addresses. The maximum number of selectable RAM addresses doubles each time a new ripple stage is added to the address register, so the address limit can be raised to 32,768 by simply adding four extra ripple stages.

Digital Delay Line Variations

The last few sections have presented a fairly comprehensive description of modern digital delay line circuit principles, together with sufficient information to enable most experienced electronics enthusiasts and professionals to design their own personal systems. There are, however, a few special and potentially useful circuit variations that have not yet been mentioned, as follows.

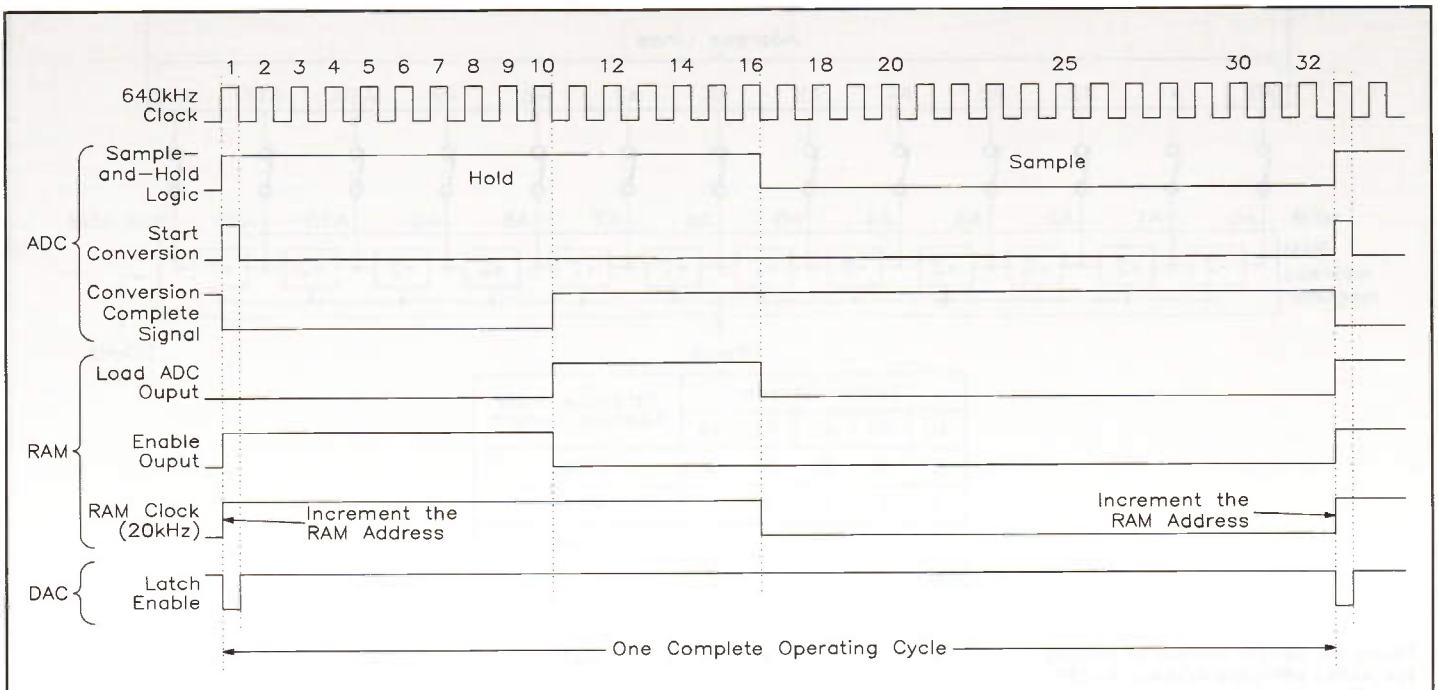

Figure 10. Basic form of the main set of timing waveforms when using an 8-bit ADC and a 20kHz RAM clock.

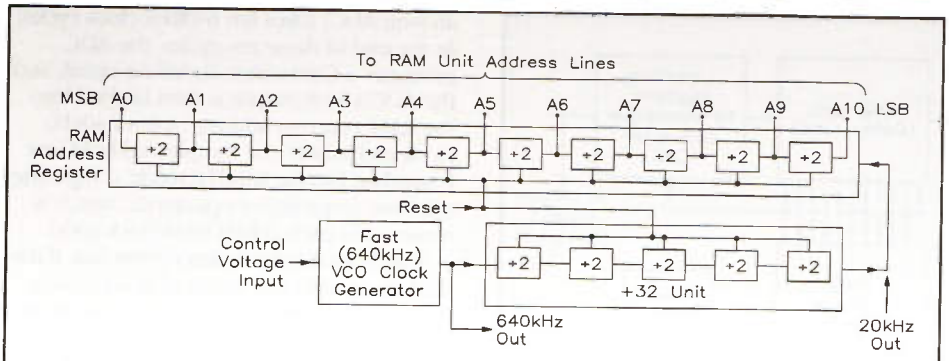

Figure 11. Block diagram of the clock generator system and the RAM address register.

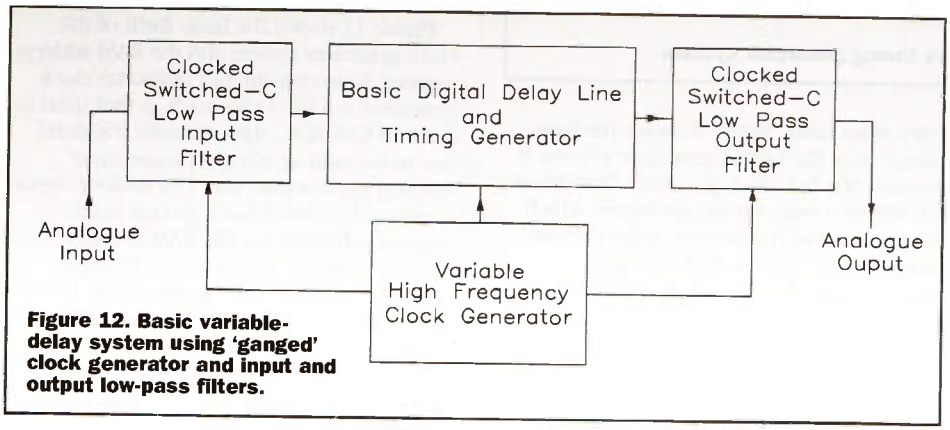

Figure 12. Basic variable-delay system using 'ganged' clock generator and input and output low-pass filters.

Delay-time Variation

A digital delay line's delay-time can be varied by altering either its clock frequency or its RAM's effective address 'length'. If the 'variable clock frequency' technique is used, it is important to remember that the system may run into severe aliasing problems if the system's clock frequency to low-pass input-filter cut-off frequency ratio falls below the critical 2:1 value. One way of avoiding this problem is to 'gang' the system's clock and cut-off frequencies by making the low-pass input and output filters from clocked switched-capacitor active filter ICs (such as the MF10), driven by the system's clock in the way shown in Figure 12 and given a 2·5:1 clock to cut-off ratio. This system gives a 3kHz bandwidth at a 7·5kHz clock frequency, rising to 20kHz at a 50kHz clock frequency.

The simplest way of varying the RAM's effective address length (and thus, the delay time) is to use the technique shown in Figure 13, where the RAM Address register can generate up to thirteen address bits and can thus select a maximum of 8,192 addresses from the 64K RAM. It can have its effective address range reduced (in divide-by-2 steps) by opening appropriate switches in the A0 to A4 address lines in the ways shown in the table. Thus, with only the A0 switch open, the effective address range is reduced to 4,096, and with all five switches open, it falls to 256 addresses. In practice, the address switches are usually electronic (CMOS) types, controlled by simple logic networks, and the circuit is used in conjunction with a limited range (up to 2·5:1) variable-clock system of the Figure 13 type, thus making the delay fully variable over an 80:1 range.

Figure 14 shows a rather more sophisticated way of varying the RAM's effective address length. Here, the 13-bit output of the RAM's clocked Address register is applied to both the RAM and the 'Word A' input of a 13-bit Magnitude Comparator (made from four 74LS85 4-bit comparator ICs), which has its 'Word B' input supplied by a 13-bit UP/DOWN counter. This can have its direction and clock speed controlled via switches S1 and S2 and gives 'end-stopped' operation (i.e., it can not be clocked above '1111111111111' in the UP direction or below '0000000000000' in the DOWN direction, but can be set to any value within this range). The circuit's basic action is such that, in each full operating sequence, the Address register's output sequentially steps upwards from the 'all-zeros' value until its 13-bit output code coincides with that set in the UP/DOWN counter. At this point, the 'A = B' output of the Magnitude Comparator goes high and resets the Address register's output back to the 'all-zeros' value, and the sequence starts to repeat again.

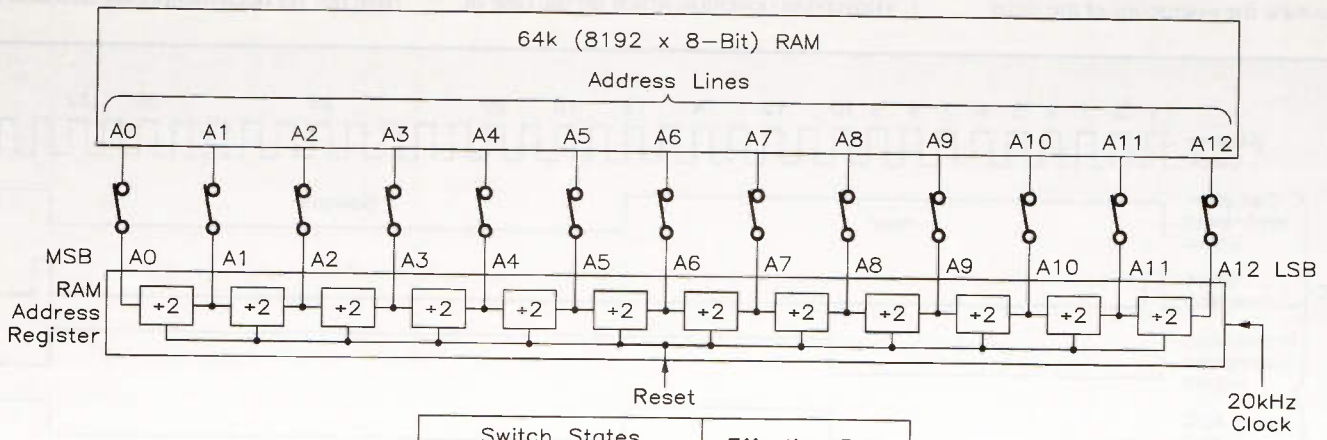

Switch States					Effective RAM Address Length
A0	A1	A2	A3	A4	
C	C	C	C	C	8192
X	C	C	C	C	4096
X	X	C	C	C	2048
X	X	X	C	C	1024
X	X	X	X	C	512
X	X	X	X	X	256

X = Switch Open
C = Switch Closed

Figure 13. Simple method of varying the RAM's effective address length (and thus, the delay time) via selector switches.

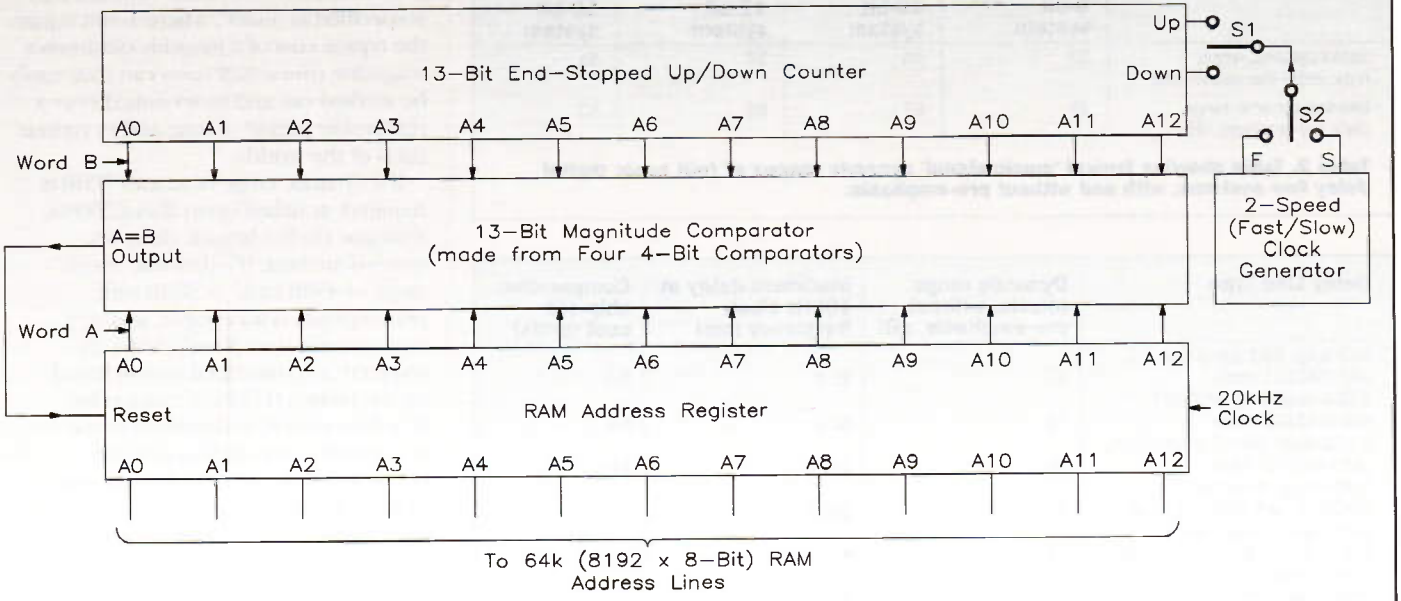

Figure 14. Method of varying the RAM's effective address length over its full range, in 1-digit steps.

Note that the effective address length of the Figure 14 circuit is fully variable from 0 to 8,192 in 1-digit steps via the UP/DOWN counter controls, and that it allows the delay line's delay-time to be varied over a very wide range without altering its bandpass values or causing aliasing problems.

Signal Pre-emphasis

When used in AC-signal processing applications, ADCs of less than 12-bit size have inherently poor dynamic range performances, due to their digital 'step size' limitations, and these ranges cannot be improved by using 'companding' techniques of the type that are often used in linear audio circuit designs. Their effective dynamic ranges can, however, be improved by about 12dB by using conventional audio pre-emphasis and de-emphasis techniques, as shown in the basic digital delay line system of Figure 15.

The amplitudes of most voice and music signals are dominated by bass frequencies, with the amplitudes of the higher 'treble' frequency signals – which are mainly harmonics of the bass signals – falling off at a 6dB/octave rate. When these signals are fed through a delay line system with a poor dynamic range, the higher-frequency signals are – because of their relatively low amplitudes – the first to be lost, and the resulting audio output sounds flat and unpleasant. This problem can be overcome by feeding the input signals to the delay line via a pre-emphasis filter that boosts the treble frequency amplitudes by 6dB/octave, and – after they leave the end of the delay line – then restoring the signals to their original form via a matching de-emphasis filter that cuts the treble frequency amplitudes by 6dB/octave. Figure 16 shows the basic forms of the two filters, which normally have their maximum boost or cut limited to about 20dB by their resistance values, and have their turnover frequency (usually about 800Hz) set via C1.

Table 2 lists the typical 'music signal' dynamic ranges of 8, 10, 12 and 16-bit digital delay line systems, with and without pre-emphasis. Note first that the 'music signal' (low distortion) dynamic range of any ADC is about 6dB less than its absolute maximum dynamic range, as listed in Table 1, and that an addition 3dB of dynamic range is lost when the ADC's digital output is converted back to analogue form by the DAC at the end of the digital delay line. Also, note that a delay line system's dynamic range increases by 6dB for each 1-bit increase in its ADC/DAC size; thus, a 12-bit system's performance is 12dB better than that of a 10-bit system. Finally, note that the use of pre-emphasis increases the dynamic range of any digital delay line by about 12dB, and thus effectively raises the system's 'bit' size by 2-bits.

Which Delay Line System is Best?

The 'best' delay line system is the one that is the most cost-effective for use in a specified application, and Table 3 lists relevant details of nine different systems. In this table, the 'maximum delay' is specified at a clock frequency of 10kHz, at which, the line's signal bandwidth is typically 4kHz. The 'comparative chip-set

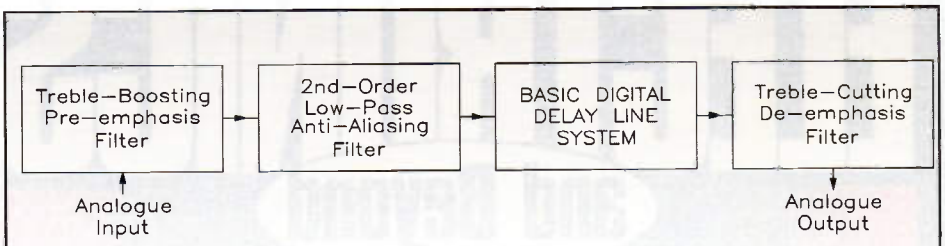

Figure 15. Adding pre-emphasis to a digital delay line can boost its effective dynamic range by 12dB.

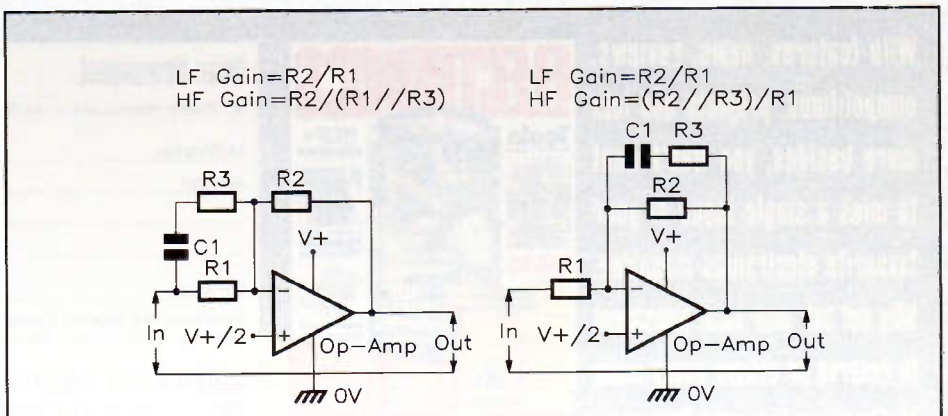

Figure 16. Basic pre-emphasis (treble-boost) and de-emphasis (treble-cut) filter circuits.

	8-bit system	10-bit system	12-bit system	16-bit system
Useful dynamic range, basic delay-line system (dB)	33	45	57	81
Effective dynamic range, using pre-emphasis (dB)	45	57	69	93

Table 2. Table showing typical 'music signal' dynamic ranges of four basic digital delay line systems, with and without pre-emphasis.

Delay Line Type	Dynamic range (music, without pre-emphasis, dB)	Maximum delay at 10kHz clock frequency (ms)	Comparative chip-set cost (units)
512-stage BBD (MN3004, with MN3101 clock)	85	25·6	5·1
1,024-stage BBD (MN3207, with MN3102 clock)	73	51·2	5·6
3,072-stage BBD (3 × MN3207, with MN3102 clock)	70	153·6	13·6
3,328-stage 6-tap BBD (MN3011, with MN3101 clock)	76	166·4	16·0
8-bit Digital System, with 64k (8,192 × 80-bit) 6264 RAM	33	819·2	12·6
10-bit Digital System (HT8955A), with 64k DRAM	45	655·4	5·5
10-bit Digital System (HT8955A), with 256k DRAM	45	2,621·6	5·1
12-bit Digital System, with 64k (8,192 × 8-bit) 6264 RAM	57	409·6	23·5
16-bit Digital System, with 64k (8,192 × 8-bit) 6264 RAM	81	409·6	43·5

Notes: Analogue BBD system = BBD IC + Clock IC + 2 op-amp filters
Digital system = ADC, DAC, clocks, Address Register, etc. + RAM + 2 op-amp filters.
Use of pre-emphasis increases the effective dynamic ranges of all systems by 12dB (equal to a 2-bit upgrade on digital systems) at an additional chip-set cost of 0·53 units.
In the 'comparative chip-set cost' column, 1 unit equals the typical cost of a monthly electronics magazine (= £2.25 in the UK, $3.50 in the USA at late 1996 prices).

Table 3. Table listing basic performance details of nine different analogue and digital delay line systems.

cost' (the total cost of the system's ICs) is specified in 'units', where 1-unit equals the typical cost of a monthly electronics magazine (the actual costs can thus easily be worked out and index-linked over a reasonable period of time and in various parts of the world).

If a dynamic range of at least 70dB is required, at delays up to about 200ms, analogue bucket-brigade delay line systems are best. If a dynamic 'music' range of 45dB basic or 57dB with pre-emphasis is acceptable, and very long (greater than 50ms) delays are required, a 10-bit digital system based on the Holtek HT8955A 'voice echo' IC is best (this IC is described in the next month's concluding episode of this 4-part series). If a dynamic range of 81 to 93dB is required, at delays greater than 25ms, a 16-bit digital delay system will be needed. Note that the most expensive ICs in a digital system's chip-set are the ADC and the DAC, and that the RAM (which determines the system's maximum delay time) is comparatively inexpensive. Thus, 64K and 256K SRAM ICs typically cost only 1·5 and 3·5 units respectively, and 64K and 256K DRAM types cost 1·95 and (surprisingly) 1·55 units, respectively.

Next month's concluding part of this series will give a detailed description of the Holtek HT8955A low-cost digital delay line IC, together with practical application circuits. ELECTRONICS

ELECTRONICS and Beyond

BRITAIN'S BEST MAGAZINE FOR THE ELECTRONICS ENTHUSIAST

Reserve your copy today!

With features, news, reviews, competitions, projects and lots more besides, you won't want to miss a single issue of your favourite electronics magazine. Why not ask your local newsagent to reserve or deliver every issue of *Electronics and Beyond*.

Subscription Orders call 01702 554000

Dear Newsagent

☑ Please reserve/deliver (delete as applicable) each issue of ***Electronics and Beyond***.

Mr/Mrs/Ms

Address

Postcode

Signature

Electronics and Beyond is published monthly and is distributed through your wholesaler by: Seymour, 1270 London Road, Norbury, London SW16 4DH. Tel: +44 (0)181 679 1899.

BRITAIN'S BEST MAGAZINE FOR THE ELECTRONICS ENTHUSIAST

Published Monthly

ELECTRONICS and Beyond

CIRCUIT MAKER

Garden Gate Alarm

by Paul Nelson

Last July at 4 a.m., a thief stole the lawnmower from our garden shed.

We have a garden gate attached to the side of the garage, so I connected a reed security switch (FK77J) via twin-wire cable to the hall to a battery and buzzer. However, the buzzer would be continuous, so I was forced to use a relay to changeover from the normally closed reed circuit.

I returned from a week's holiday to find the buzzer burnt out as a window cleaner had been and left the gate open!

From various bits lying around, I concocted a timer-alarm which may suit others in a similar plight, and/or even on a garden shed, as no power is involved and a twin-wire cable could be sunk away to the house.

Originally, I used a dual 555 timer and a µA759 driver IC for the amplifier, with a 6V fixed-voltage regulated Power Supply (BZ81C type). This gave a four-second blurp to a spare 4Ω car speaker which is mounted in the hall with green and red LEDs behind its little grill (quite pretty really).

The circuit here is cheaper to build and involves a variety of parts and so is technically more interesting for the dedicated hobby nut (my wife and quite a few friends put me well into that category).

SW1 (in series with another, if to sense both gate and shed) holds the SCR (Q1) OFF and enables a Green LED to indicate power is ON and all is well. C1 shorts any stray noise to ground to prevent random alarms.

When SW1 is opened, Q1 latches ON, and the Red LED shows the gate is open or has been open. The Green LED will be OFF with gate open. SW2 can unlatch Q1 when gate is closed (and shed checked!).

NAND gates a & b form a one-shot of a few seconds (start with pin 3 HIGH, and think it out), an alarm spike through C2 will cause pin 3 to go low until C3 charges up enough to take pin 5 HIGH again. NAND gates c & d form an oscillator. When pin 13 goes LOW, pin 11 goes HIGH and pin 10 goes LOW. Tricky bit now . . . as C4 charges up through R8, pin 12 eventually goes HIGH; pin 11 goes LOW and pin 10 goes HIGH, so C4 is reverse-charged and another cycle starts. In effect, pin 10 will go up-and-down until stopped by pin 13 going back to HIGH, as the one-shot pulse ends – which will hold pin 11 permanently LOW.

The CMOS output is pretty weak so has to be pumped up a bit; use a PNP Darlington (e.g. TIP127) or make one up with a BC557/ TIP31A depending on how loud you aim to shout.

Of course, one could just use a smoke-alarm 'zone-input' on the house-alarm with SW1 (+), but will you remember to program the thing? You could even use the +12V from the house alarm to power this circuit as the house alarm does not need the power for the screecher often. This enables the circuit to be on all the time, and the LEDs are very visible as you make for bed – and that provides more peace of mind.

Figure 1. Garden Gate Alarm circuit diagram.

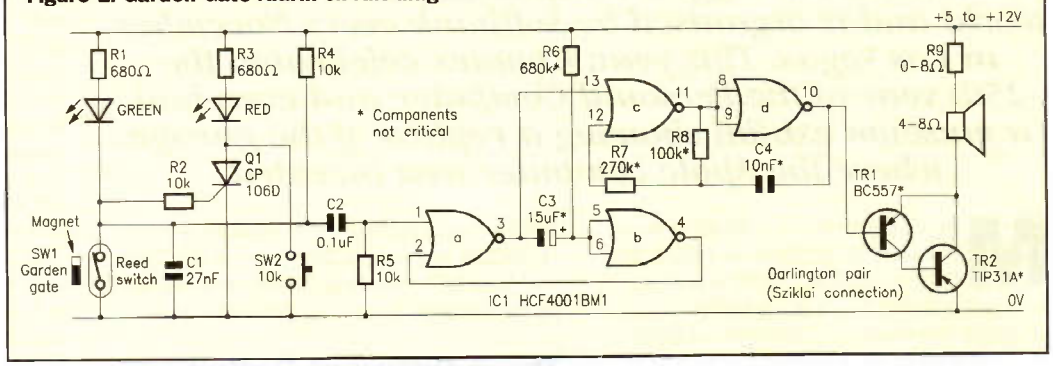

The MICRO MODULE
A NEW LOW COST controller that gives you customisation for as little as £95 one off + VAT

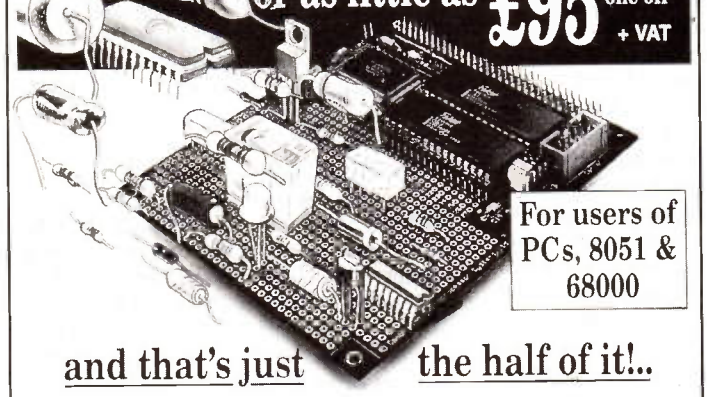

For users of PCs, 8051 & 68000

and that's just the half of it!..

FEATURES
- 16/32 bit 68307 CPU for fast operation
- Up to 1 Mbyte of EPROM space onboard
- Up to 512Kbyte SRAM space onboard
- 32 Kbyte SRAM fitted as standard
- RS232 serial with RS485 option
- MODBUS & other protocols supported
- Up to 22 digital I/O channels
- 2 timer/counter/match registers
- I²C port or Mbus & Watch dog facilities
- Large Proto-typing area for user circuits
- Up to 5 chip selects available
- Program in C, C++, Modula-2 & Assembler
- Real Time multitasking Operating System
- OS9 or MINOS with free run time license option
- Manufacturing available even in low volumes
- A full range of other Controllers available

P.C. 'C' STARTER PACK AT ONLY £295 + VAT

The Micro Module will reduce development time for quick turnaround products/projects and with the P.C. 'C' Starter pack allow you to start coding your application immediately, all drivers and libraries are supplied as standard along with MINOS the real time operating system all ready to run from power on.

The 'C' Starter pack includes : A Micro Module with 128 Kbyte SRAM, PSU, Cables, Manuals, C compiler, Debug monitor ROM, Terminal program, Downloader, a single copy of MINOS, Extensive example software, and free unlimited technical support all for £295.

BMS Cambridge Microprocessor Systems Limited
Unit 17-18 Zone 'D', Chelmsford Rd. Ind. Est.,
Great Dunmow, Essex. U.K. CM6 1XG
Phone 01371 875644 Fax 01371 876077

ELECTROLUBE®

NEW PRODUCTS FROM ELECTROLUBE

LABEL REMOVER

Removes self-adhesive paper labels quickly and easily

Spray on, leave 5 minutes and peel off

Maplin Order Code 72152

CLEANGUARD

High performance cleaner polish

Excellent plastics compatibility

Leaves smear free finish

Maplin Order Code 72153

MAPLIN Telephone 01702 554000 Fax 01702 554001

ELECTROLUBE®
Wentworth House, Blakes Road, Wargrave
Berkshire RG10 8AW, England
Tel: +44 (0) 118 940 4031
Fax: +44 (0) 118 9403084

Network Computers AT COMDEX 1996

by Stephen Adams

Comdex is the biggest computer trade show in the world and is organised by Softbank every November in Las Vegas. This year, Comdex celebrated the 25th year of the Personal Computer and even had a museum exhibit showing a replica of the garage where the Apple computer was invented.

Most of the Comdex exhibitors show what will be available in 1997 in the USA (in the UK, maybe a year to 18 months away). So, it is a good place to go to see the future of computers already in development or as marketable products. As the exhibition was for the American market, the European part of the same company may not be aware of these 'coming' products. So, I have given the USA contacts at the end of the article.

The NC (Network Computer)

Network computing was the main theme of the show. Unfortunately, the main supporter of Network Computers (NCs) is Sun Microcomputers, and they did not attend the show. Sun announced their thin client, not at Comdex (they refuse to go, claiming it is a Windows/Intel PC based show), but at the beginning of November in New York. So, it was left to Microsoft, IBM, Intel and others to say what they thought the specification *should* be, although three companies have already produced NCs (HDS Network systems, Boundless and Acorn). They were at the show and have fully matched the NC spec set out by the original designers, SUN and Oracle.

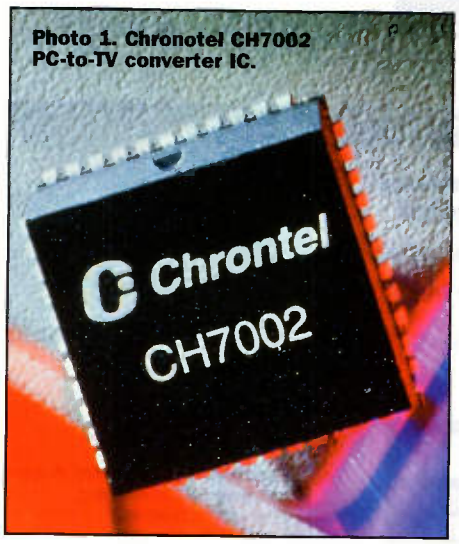

Photo 1. Chronotel CH7002 PC-to-TV converter IC.

Three Different Definitions

A quick definition (by Sun) is that it is a JAVA-based operating system running on a non-Intel platform (using a RISC processor chip), with no long-term storage and relies on the network for all of its programming. It acts basically like a terminal. Sun calls this the 'Thin' client. The targeted cost is $500 (£500 UK).

The definition (by Network and Cable TV suppliers such as WEBTV) is a set-top box that could be used by the mass market of non-computer users, just like a superior games machine. The box's uses would be limited to access the Internet for e-mail, programs that run on a network and multimedia such as digital film clips. Again the approximate cost would be $500. The only machines capable of reaching this criteria now are the so-called WEBTV set-top boxes. The box can run on any processor (including Intel) via the home TV and built in modem to a compatible supplier using protocols such as TCP/IP and PPP. WEB-TV. It costs about $19.95 a month and is only available in California, but other Internet providers such as AOL are looking to make this a generic service, with the customer using a browser such as Netscape.

The definition by (Microsoft, Intel and others), is a JAVA enabled Internet browser running in Windows on a PC (Sun calls this the Fat Client, as it costs so much more to produce). Cost $1,000 plus.

One of the original points made by SUN, ORACLE, etc., was that the cost of running a computer would come down, with all the cost of the programs, storage, etc., being down to the network supplier. The user would hire the service via a subscription and eventually the cost of the subscription would include the set-top box.

Photo 2. Philips Magnavox set-top box.

TV Set-top Boxes

Examples of such devices were much in evidence at Comdex this autumn and some were even ready for sale. Sharp has the World's first 32in. wide-screen Internet-ready TV in Japan at Y330,000. The TV set displays TV or Internet as channels and can be used for sending e-mail as well as browsing the Internet. Mitsubishi announced the 'DiamondWeb' TV which will, using Java, allow Americans to be able to access the Internet in the Summer of 1997. Philips was using a single Cronotel CH7002 chip (see Photo 1) to convert VGA to NTSC/PAL television standard without the use of additional RAM chips in its Magnavox TV set-top boxes (£329.95), already on sale in the USA – see Photo 2.

A British version could well be the MSU Slipstream, a set-top box costing approximately £199 (the same as a satellite receiver), shown in Photo 3. This unit has as its base, a Zilog 32-bit processor core, 16M-byte of 32-bit RAM, 8M-byte of flash ROM, and a 16-bit stereo sound board. The outputs are a parallel printer, Composite TV (PAL and NTSC) for SCART sockets or S-video outputs and the connection is via a 33·6k-bps modem. Software includes an HTML browser with POP3 e-mail software (using the optional keyboard).

Slipstream is already for sale in the USA this December, in a joint operation with MITAC and AIM (American Interactive Media) Inc. MSU intends to work with several large commercial products manufacturers, such as Amstrad in the UK, to put their badge on the product. Coming initially with an infra-red remote control and having 30 buttons, people will be able to view pages and read their e-mail on the Internet just as easily as turning on the TV. Internet providers will only need to provide a PPP account (available from Demon, Pipex and many others). Users will be able to update the software in the flash ROM at any time by logging into the home page of MSU, `www.msu.co.uk`.

NC for Business

Business Users, however, demand more security and will require a true JAVA-based client station at home (or Office) to log into the company network. The Intranet (the company's own internal Internet) server will provide the security, programs, etc., that the

Sun produced the first NC; the 'Java-station' costs $795, and is a desktop-sized computer containing a Microspark II RISC processor with 8M-byte of RAM. A 10Base-T ethernet network board is in there, with a mouse and keyboard. It supports a VGA monitor, but no flash memory. The 'Netra J' server costs $8,000, supports 50-100 users and downloads the operating system to the Java-station when it is turned 'ON'. The software on the server comprises Solaris Unix as the operating system, Netscape Enterprise Server, Anti-Virus Service, and Netscape Gold browser software. Communications software is included to connect to an IBM SNA mainframe system.

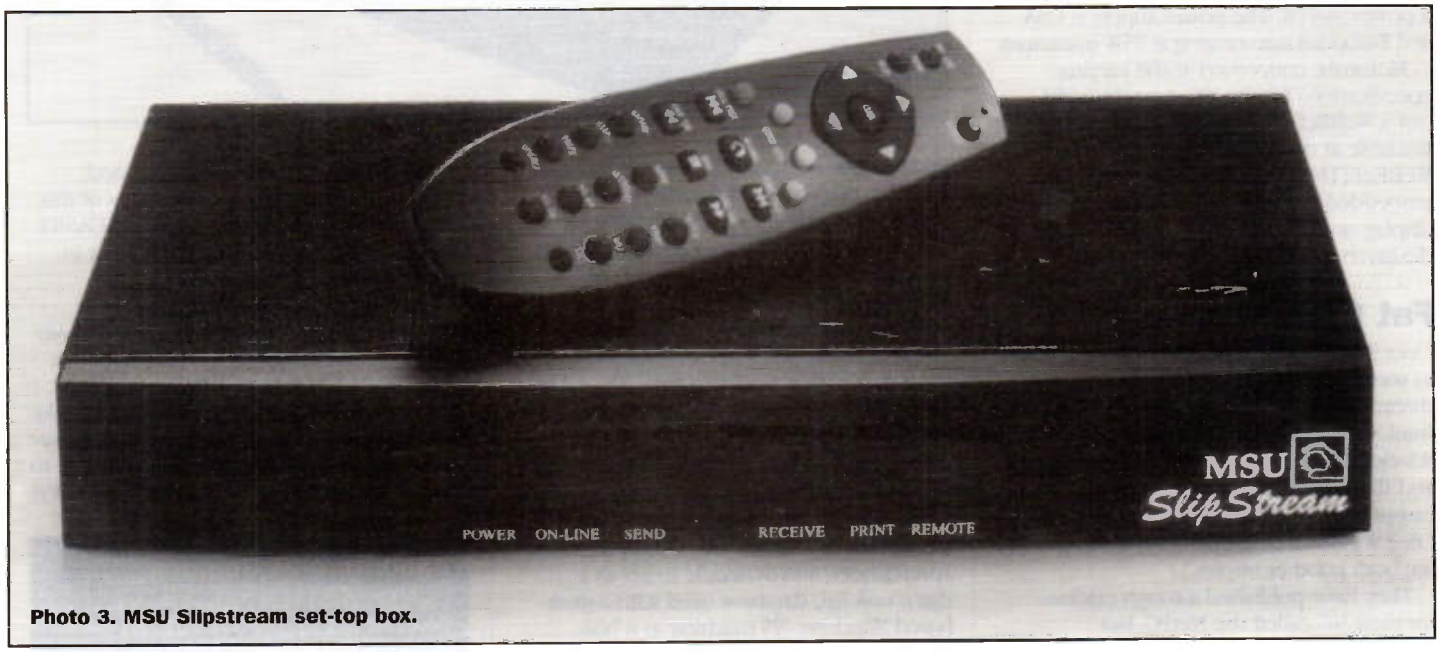

Photo 3. MSU Slipstream set-top box.

worker requires. All at much less cost than the current PC or notebook takes to buy, maintain and update the software, etc. The disadvantage is the high network cost, as it will take longer to log into the network because there is no software located on the NC – it is all in the server. However, automatic back-up of any files, the same suite of programs to everyone (to simplify training and support), all of which reduces the high costs on any network. Larger network bandwidths will be required for each user and more resilient network (i.e., no loss of service for the worker which relies on his network at home or in the office to get paid).

In this case, the worker does not care what processor is used, the RAM size, or hard disk space, normally involved in choosing a computer, because there isn't any. The programs used will be the word-processor, spreadsheet, database or combination of any of these in a customised Company design. One of the advantages seen by BT of such a system is that they will be able to put their logo on everything without having to display a Microsoft Windows logo or pay licence fees for other peoples' operating software. They would also be able to sell it as a service, much as cable TV companies sell satellite TV to homes at present, with all the control of what the worker can do being strictly controlled.

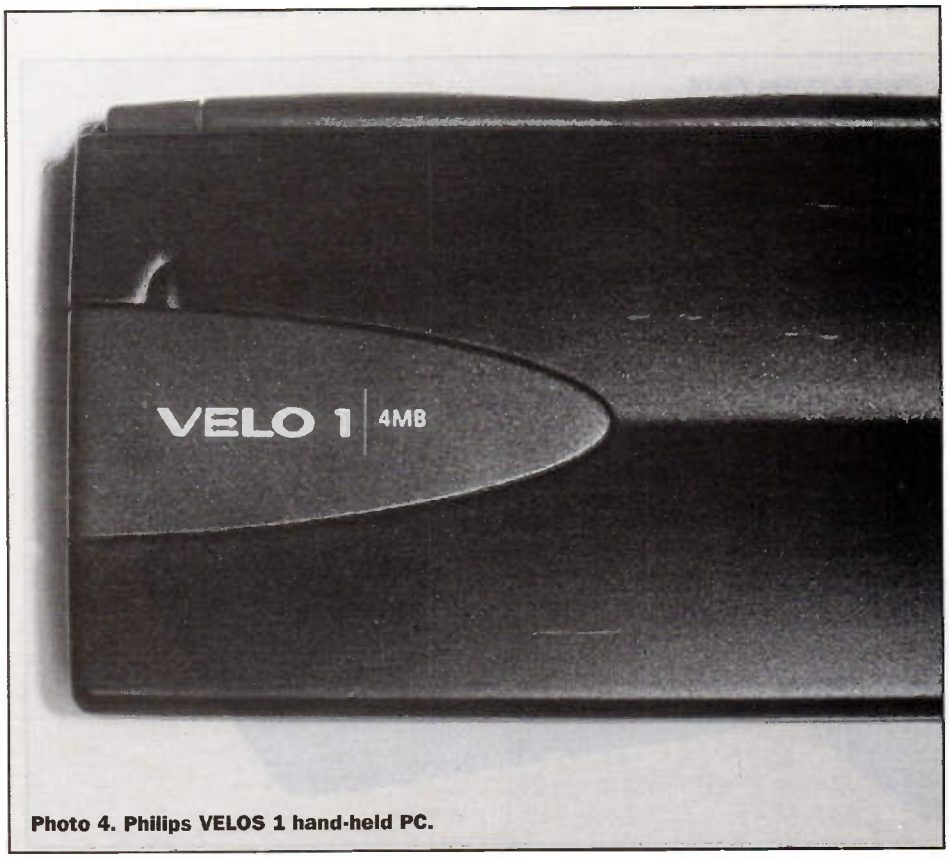

Photo 4. Philips VELOS 1 hand-held PC.

Sun hopes to add a CD-ROM in the near future, including on it the Corel WordPerfect suite re-written in the language called Joffice. Sun also announced that 400 JAVA applications have been written, while Lotus announced it will convert the Smartsuite to Java by the first or second quarter of 1997.

Lucky Goldstar (LG) have a Network Computer costing $499 – see Photo 5. The 9·5 × 3·5 × 9·8in. box contains 8M-byte of SDRAM, 2M-byte flash ROM for running the Hotjava browser from Sun and 1M-byte video RAM. The sockets include Ethernet 10base-T, PS/2 Keyboard, mouse, audio output jack, microphone input jack and a printer port. The video output is SVGA monitor or NTSC TV and the options are a 28·8k-bps modem and a smart card (for authorisation, identification or money payment). The front of the case only contains a Power LED, SmartCard slot and a power switch. The power supply is USA and European auto-ranging at 25W maximum.

Motorola, concerned at the varying specifications for the NC, have brought out a WeBRef design board due to be available at the beginning of 1997. The WeBReF(TM) board contains a MPC8xxx embedded PowerPC core, modem, LCD display, and NTSC/PAL TV output to help designers standardise their offerings.

Fat Clients

Over 90 manufacturers support Microsoft in seeing the NC and the Internet as a threat to their own proprietary business. Intel, who make the majority of the Windows-based CPUs and support chips, and IBM, who has a foot in both camps with PowerPC (RISC) and an OS/2 Windows type operating system, are both good examples.

They have published a rough outline for their NC called the NetPC, but meanwhile, see an alternative software-based solution of a Windows based JAVA enabled browser (such as Microsoft's Internet Explorer or Netscapes version 2 or above) as a cheap add-on 'NC box'. This helps their customers existing home or office PC running Windows '95 or Windows NT become 'NC compatible'.

It has even produced a Hand-held Portable Computer (HPC) running on a cut-down version of Windows '95, called Microsoft Windows CE, as the operating system. The HPC will run a smaller version of Microsoft Internet Explorer program to access the Internet and send e-mail. Pocket versions of Word, Excel and Schedule 7+ are included in ROM. This word-processor, spreadsheet, and Schedule to act as a diary, task list, database used with a desk-based Windows '95 machine as a host. The WindowsCE operating system will be the Microsoft alternative to JAVA.

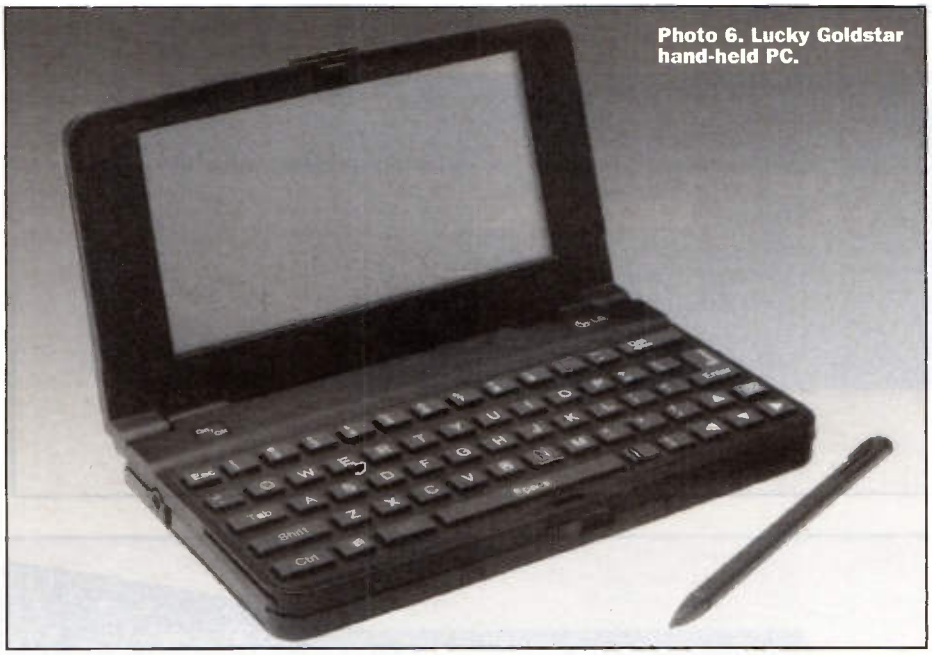

Photo 6. Lucky Goldstar hand-held PC.

NEC, Casio, Hitachi, LG, Philips and Compaq have all produced versions of this HPC (see Photos 4-6), but NEC and CASIO are the only ones to have the product in the shops already in the USA.

The future is still to be decided as to whether Microsoft or Sun wins the battle over the Network Computer. The convenience of the set-top box connected to a TV may produce a half-way house that might overtake both of them for home market. The only way to see which way it is going appears to be to watch the Internet World Wide Web (WWW)!

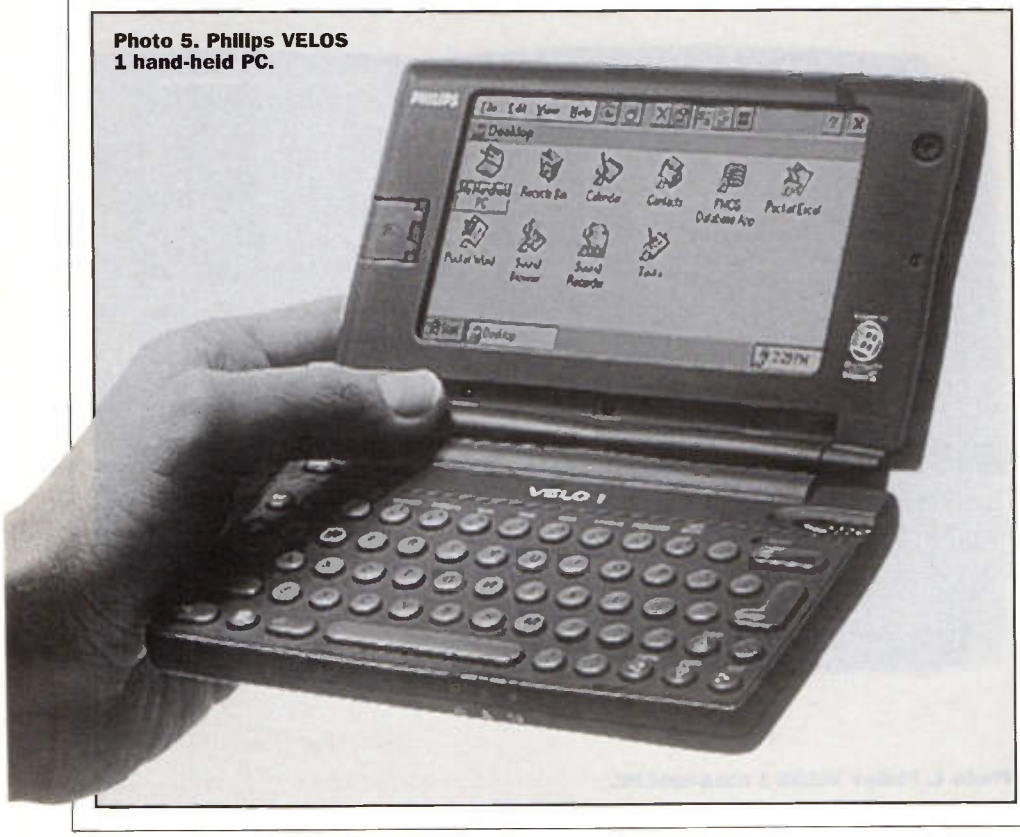

Photo 5. Philips VELOS 1 hand-held PC.

Exhibitors at Comdex

Casio Inc., 570 Mount Pleasant Avenue, Dover, NJ 07801. Tel: 001-201-361-5400.

Cronotel, 110 O'toole Avenue, San Jose, CA 95131-1326, USA. Tel: 001-408-383-9328.

LG Semicon Co., 891 Daechi-Dong, Kangnam-GU, Seoul, 135-280 Korea. Tel: 001-882-3459-3524.

Motorola Literature Distribution, P.O. Box 20912, Phoenix Arizona 85036, USA. Tel: 001-602-303-5454.

Microsoft Corporation, 1 Microsoft Way, Redmond, WA 98052, USA. Tel: 001-206-882-8080.

MSU(UK) Ltd, Elder House, 526-528 Elder Gate, Central Milton Keynes, MK9 1LR.

Tel: 01908-232-100.

NEC Computer Systems division, 330 N. Bernado Avenue, Mountain View, CA 94045, USA. Tel: 001-415-528-5505.

Philips Consumer Electronics. Tel: 001-423-521-3274.

Sharp Electronics Corporation, Sharp Plaza, Mahwah, NJ 07430. Tel: 001-201-529-8200. Fax: 001-212-505-1397.

Softbank 300 First Avenue, Needham, MA 02194-2722, USA. Tel: 001-617-433-1500.

Sun Microsystems, Inc., 2550 Garcia Ave., Mountain View, CA 94043-1100 USA.

Watchmoor Park, Riverside Way, Camberley, Surrey GU15 3YL. Tel: 01276 20444. Fax: 01276 683997.

WEBTV Networks Inc., Tel: 001-415-326-5274.

ELECTRONICS Classified

Placing an advertisement in this section of *Electronics and Beyond* is your chance to tell the readers of Britain's best magazine for electronics enthusiasts what you want to buy or sell, or tell them about your club's activities – Absolutely Free of Charge! We will publish as many advertisements as we have space for. We will print the first 30 words free, but thereafter the charge is 10p per word for each added advert per reader.

Placing an advertisement is easy! Simply write your advertisement clearly in capital letters, on a postcard or sealed-down envelope. Then send it, with any necessary payment, to: *Electronics Classified*, P.O. Box 777, Rayleigh, Essex SS6 8LU.

Advertisements will be published as soon as possible, space allowing. No responsibility is accepted for delayed publication or non-inclusion of advertisements.

Readers who have reasonable grounds to believe they have been misled as to the nature of an advertisement are advised to contact the Publisher and their local Trading Standards Office.

Computers

Spectrum Display Unit by Microdyne corporation, CRT 1161-5A, 7 × 2in. panel size 7 × 2in. New condition, £185. Capacitance meter, 200pF to 2,000μF hand-held by Delta Precision Corp., £45. Tel: (01354) 693675, Chatteris.

Circuit Analysis Program. Runs on IBM PC. Calculates gain, phase, impedances. Provides printer and VGA output. Many examples. SAE for details to: P. Montgomery, Downings, Bells Hill, Stoke Poges, Slough SL2 4EG.

Various

Solartron CD1212 Oscilloscope with four plug-ins (CX1252 differential, CX1258 dual-trace, CX1259 wideband). Very low RF oscillator, EHT needs attention. £50 complete with manual. Tel: (01483) 505504, Guildford.

***Electronics* Back Issues** for sale – no. 23-100. Mint condition, £100 the lot. Tel: (0181) 643 5077.

ILP HY50 Comp. amplifier kit for sale. Contact: Alan Coulston, 13 Parklands, Totnes TQ9 5HZ.

PE Minisonic Mk2 Synthesizer, all modules/keyboard fully built/wired. Requires further testing. Data sheets available. Electronics magazines (*PE*, *ET*, *HE*) between 1974-86 (87 mags total). Offers. Tel: (01935) 26524.

35 Electronics Magazines, 4 Maplin project books. Volumes 4, 5, 10, 11, Everyday Electronics. Contact: G. Sparkes, Tel: (01424) 434168.

PIC Development System PICSTART –16B. Complete development system as sold by Maplin, unopened and still in shrink-wrap. £110 o.n.o. Tel: (01245) 359369 after 6pm, Chelmsford.

Dual-trace Telequipment Oscilloscopes for sale. 50MHz with 2 timebases, £180. 10MHz with storage, £95. Tel: (01443) 207037.

Wanted

Offside Front (Driver's) Door for BMW E30 3-series 4-door in Henna Red required. Cash waiting. Tel: (01702) 554155 xtn. 283 (weekdays) or (01702) 315801 (after 6pm/weekends).

Technical and Supplier Information for ringer amplifier IC, type TLP 627.4, as used in BT extension booster. Phil Thomas, 42 East St., Seaford, BN25 1SE. Tel: (01323) 893305.

Beg, Borrow or Buy Maplin Projects Book 4 or Magazine Issue 16 for information on Mains Tx/Rx module. Write to: Kanaar, 41 Wellesley Drive, Crowthorne RG45 6AL, Tel: (01344) 776342.

Wanted by Television Student, second-hand field strength meter, please contact: Ken Darville, Avia, Station Road, Yeoford, Devon EX17 5HU. Tel/fax: (01363) 84017.

Club Corner

ARS (Aberdeen Amateur Radio Society) meets on Friday evenings in the RC Hall, 70 Cairngorm Crescent, Kincorth. For details contact: Martin, (CM0JCN), Tel (01569) 731177.

Winchester Amateur Radio Club meets on the third Friday of each month. For full programme contact: G4AXO, Tel: (01962) 860807.

The British Amateur Electronics Club (founded in 1966), for all interested in electronics. Four newsletters a year, help for members and more! UK subscription £8 a year (Junior members £4, overseas members £13.50). For further details send S.A.E. to: The Secretary, Mr. J. F. Davies, 70 Ash Road, Cuddington, Northwich, Cheshire CW8 2PB.

Bromsgrove Amateur Radio Society meets at 8pm on the 2nd and 4th Tuesday of each month, at the Lickey End Social Club, Alcester Road, Burcot, Bromsgrove. Contact Barry Taylor G0TPG, Tel: (01527) 542266.

Bury St. Edmunds Amateur Radio Society. Meetings held at Culford School, 7.30pm for 8.00pm on the third Tuesday of each month, unless otherwise stated. Further details from Kevin Waterson, (G1GVI), 20 Cadogan Road, Bury St. Edmunds, Suffolk IP33 3QJ. Tel: (01284) 764804.

Crystal Palace and District Radio Society meets on the third Saturday of each month at All Saints Church Parish Rooms, Beulah Hill, London SE19. Details from Wilf Taylor, (G3DSC), Tel: (0181) 699 5732.

Derby and District Amateur Radio Society meets every Wednesday at 7.30pm, at 119 Green Lane, Derby. Further details from: Richard Buckby, (G3VGW), 20 Eden Bank, Ambergate DE56 2GG. Tel: (01773) 852475.

Electronic Organ Constructor's Society. Details of programme magazine and membership from: Don Bray (Hon. Sec.), 34 Etherton Way, Seaford, Sussex BN25 3QB. Tel: (01323) 894909.

E.U.G. User group for all 8-bit Acorn Micros, since 1991. Still going strong. Programming, news, information, sales. Contact: E.U.G., 25 Bertie Road, Southsea, Hants. PO4 8JX. Tel: (01705) 781168.

The Lincoln Short Wave Club meets every Wednesday night at the City Engineers' Club, Waterside South, Lincoln at 8pm. All welcome. For further details contact Pam, (G4STO) (Secretary). Tel: (01427) 788356.

Preston Amateur Radio Society meets every Thursday evening at The Lonsdale Sports and Social Club, Fulwood Hall Lane, Fulwood, (off Watling Street Road), Preston, Lancashire PR2 4DC. Tel: (01772) 794465. Secretary: Mr Eric Eastwood, (G1WCQ), 56 The Mede, Freckleton PR4 1JB, Tel: (01772) 686708.

Science At Your Fingertips. Want to meet friends interested in Science? Send an SAE to: Daniel Gee, S.A.Y.F., 37 South Road, Watchet, Somerset TA23 0HG, or Scott Mason, S.A.Y.F., 58 Park Avenue, Devonport, Plymouth PL1 4BP. http://homepages.enterprise.net/icedragon/says.htm.

SEEMUG (South East Essex Mac User Group), meet in Southend, every second Monday of each month. For details Tel: Michael Foy (01702) 468062, or e-mail to mac@mikefoy.demon.co.uk.

Southend and District Radio Society meets at the Druid Venture Scout Centre, Southend, Essex every Thursday at 8pm. For further details, contact: P.O. Box 88, Rayleigh, Essex SS6 8NZ.

Sudbury and District Radio Amateurs (SanDRA) meet in Gt. Cornard, Sudbury, Suffolk at 8.00pm. New members are very welcome. Refreshments are available. For details please contact Tony, (G8LTY), Tel: (01787) 313212 before 10.00pm.

Thanet Electronics Club. For school age Ham Radio and Electronics enthusiasts, enters its 16th Year. Meetings held every Monday evening from 7.30pm at The Quarterdeck, Zion Place, Margate, Kent. For further details contact: Dr. Ken L. Smith, (G3JIX), Tel: (01304) 812723.

Model Railway Enthusiast? How about joining 'MERG', the Model Electronic Railway Group. For more details contact: Paul King (Honorary Secretary), 25 Fir Tree Way, Hassocks, West Sussex BN6 8BU.

TESUG (The European Satellite User Group) for all satellite TV enthusiasts! Totally independent. TESUG provides the most up-to-date news available (through its monthly 'Footprint' newsletter, and a teletext service on the pan-European 'Super Channel'). It also provides a wide variety of help and information. Contact: Eric N. Wiltsher, TESUG, P.O. Box 576 Orpington, Kent BR6 9WY.

Wakefield and District Radio Society meet at 8.00pm on Tuesdays at the Community Centre, Prospect Road, Ossett, West Yorkshire. Contact Bob Firth, (G3WWF), (QTHR), Tel: (0113) 282 5519.

The (Wigan) Douglas Valley Amateur Radio Society meets on the first and third Thursdays of the month from 8.00pm at the Wigan Sea Cadet HQ, Training Ship Sceptre, Brookhouse Terrace, off Warrington Lane, Wigan. Contact: D. Snape, (G4GWG), Tel: (01942) 211397 (Wigan).

Wirral Amateur Radio Society meets at the Ivy Farm, Arrowe Park Road, Birkenhead every Tuesday evening, and formally on the the first and third Wednesday of every month. Details: A. Seed, (G3FOO), 31 Withert Avenue, Bebington, Wirral L63 5NE.

Wirral and District Amateur Radio Society meets at the Irby Cricket Club, Irby, Wirral. Organises visits, DF hunts, demonstrations and junk sales. For further details, please contact: Paul Robinson, (G0JZP) on (0151) 648 5892.

BBS Corner

Apple Crackers. FirstClass Client BBS, mainly for AppleMac and PC users. Baud rate 2·4K-bit/s to 28·8K-bit/s, 8 data bits, no parity, 1 stop bit. Tel: (01268) 781318/780724.

Mactel Metro/Iconex. FirstClass Client BBS, AppleMac and PC users. E-mail address on Internet for registered users. Baud rate 2·4K-bit/s to 28·8K-bit/s, 8 data bits, no parity, 1 stop bit. Tel: (0181) 543 8017 (Metro) or (0115) 9455417 (Iconex).

Spider! Amiga BBS. The lighter alternative. Mainly Amiga and some PC files. Fidonet, Mercurynet and Mufonet. Online games. Speeds up to 19200. Tel: (01568) 613520.

UK EUG Tatung Einstein User Group. Bi-monthly magazine, subscription only £9 per year. For a sample magazine, send 2 stamps to A. E. Adams, Ivy Cottage, Church Lane, New Romney, Kent TN28 8TY.

Please write your classified advert using one word per box below.
Adverts of 30 words or under will be printed free of charge, but thereafter the charge is 10p per word. Please include any payment for extra words with your advert.

ELECTRONICS Classified

Name _____

Address _____

_____

_____

Daytime Telephone _____

Return your advert to: *Electronics Classified*, P.O. Box 777, Rayleigh, Essex, SS6 8LU.

Photo 1. Panasonic Cathode Ray Tube (CRT).

Video PROJECTORS

Video projection is growing in popularity as the cheapest means of showing large images. Most projectors are going into clubs and pubs to show the sports events offered by satellite channels, and business users are taking advantage of them for presentation and display purposes, but a growing number are being used in home cinema systems.

by Reg Miles

The first domestic projectors appeared in the old 405-line black and white days, when a large television screen was about 15in. But the welcome increase in picture size was offset by an unwelcome increase in price; as TV screens got larger, so the limited market dried up altogether. When colour television was launched with still larger screens, almost everyone was satisfied – they had to be because the early colour projectors were even more costly and bulky. But with the advent of home video and laser disc, a number of companies began to offer more affordable projectors.

In order to bring the prices right down, a number of them just used a large plastic lens fitted onto a small Trinitron TV with the brightness on full. Not surprisingly, the line structure and colour stripes were projected and greatly enlarged along with the picture,

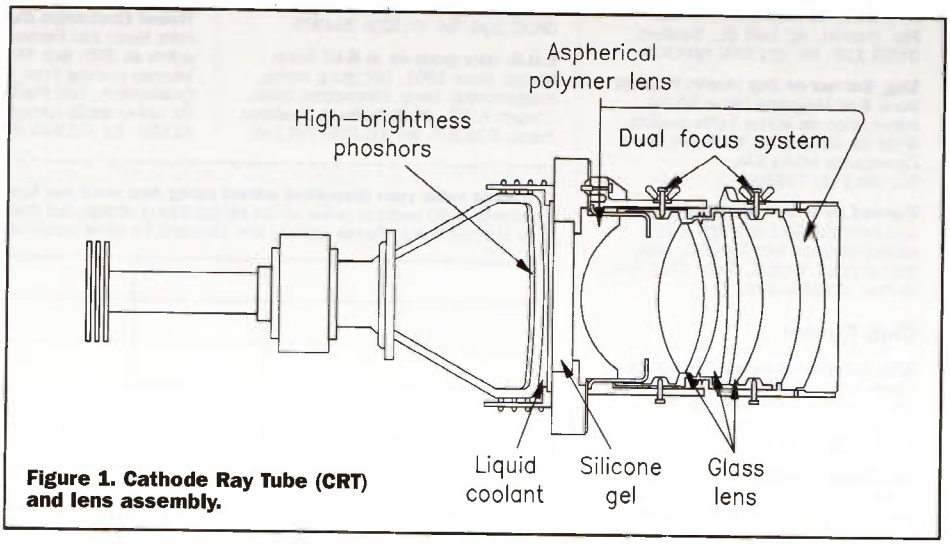

Figure 1. Cathode Ray Tube (CRT) and lens assembly.

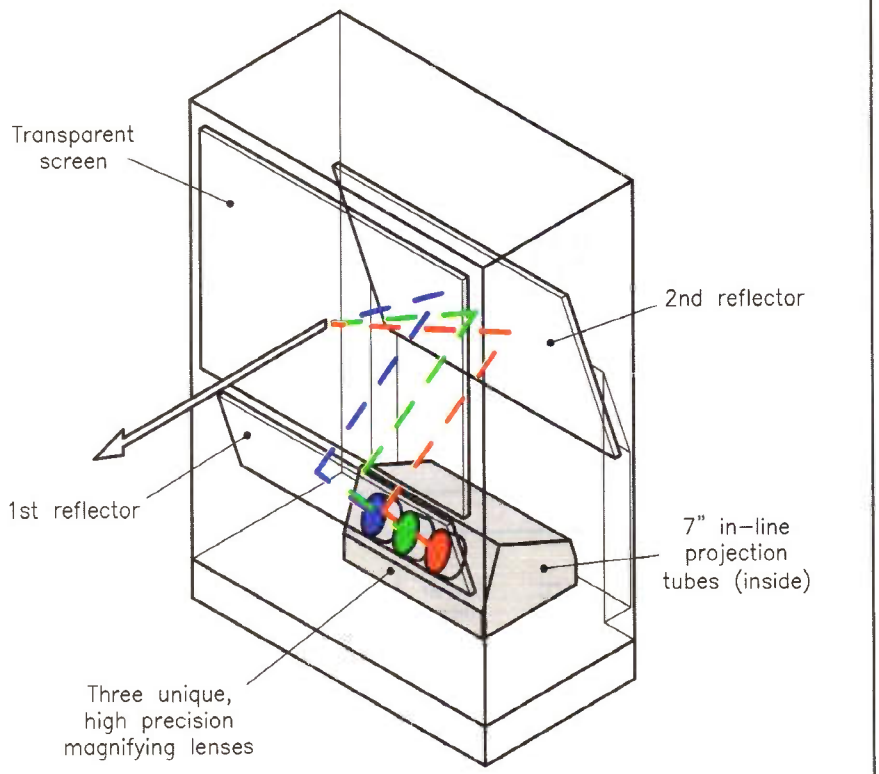

Figure 2a. Two-mirror rear projector.

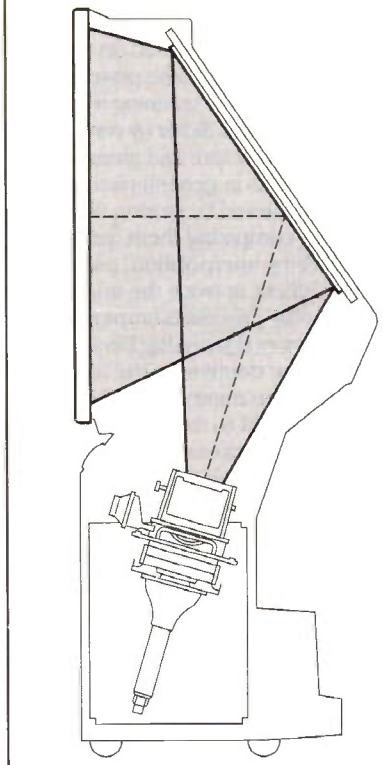

Figure 2b. Single-mirror rear projector.

and in the necessarily dark room, the quality was at best, tolerable. Other models adopted a more expensive solution with a small CRT with a high power electron gun and a good quality projection lens. The same as black and white projectors had used but, of course, with the addition of a shadowmask and red, green and blue phosphors. The result was significantly better than could ever be achieved with a lens mounted on a TV; but it still shared the disadvantage of projecting the line pattern and shadowmask structure.

The latter was obviated by using three CRTs to give separate red, green and blue images which combined on the screen to give a full colour picture. The CRTs generally ranged in size from 5-9in., with the actual phosphor area slightly smaller as in a normal TV tube. The monochrome phosphors and the absence of a shadowmask gave a much brighter and clearer image that could be viewed in ambient light or provide a longer throw for larger screen sizes. But the increase in cost was not the only price that had to be paid for the improvements. The projectors were larger and heavier. And setting up was no longer just a matter of focusing, it was also necessary to make convergence adjustments to bring the three images into perfect alignment – although it was a task made easier by an electronically generated grid pattern. Despite these downsides, the gain in performance meant that this type of projector became the norm, and it has been steadily improved over the years.

The introduction of high brightness phosphors increased the light output, as did the use of a higher power electron gun, made possible by having a liquid coolant sealed between the front of the CRT and a glass plate to conduct away the heat – see Figure 1. This liquid coolant has the additional advantage of minimising high temperature stress, which in turn, prolongs the life of the projection system. It has also proved possible to reduce the diameter of the electron beam spot to avoid excessive overlap between the interlaced scanning lines and bring out finer details and sharpen the delineation of outlines.

Further performance was squeezed out of the system by optical improvements. By optically coupling the projection lens and CRT with a silicon gel that closely approximates to the refractive index of glass (see Figure 1 again), both the transmission of the image-forming light and its contrast were increased. Light transmission was further increased by large aperture lenses of f1.0-1.2. The overall performance of lenses has been improved by the fairly recent introduction of polymer elements which can be formed into shapes that would be prohibitively expensive to achieve with glass. However, glass has not been abandoned, as Figure 1 shows; modern lenses are generally of hybrid

Photo 2. Toshiba 55in. TV projector, with Dolby.

construction, exploiting the particular properties of both materials – although some all-polymer lenses are now used.

The most recent efforts to enhance performance have concentrated on digital signal processing (DSP). Some projectors have doubled the vertical scanning frequency to 100Hz, which reduces flicker by comparison with the normal 50Hz rate and gives some slight improvements in general picture quality. This is achieved by storing fields in a digital memory, comparing them, producing additional fields by interpolation, and feeding them all out at twice the normal rate. A very similar process is employed to double the horizontal scanning frequency to 32kHz. The line doubler, as the name implies, doubles the number of lines comprising each field to fill in the spaces left by the interlacing, removing the line pattern and jagged edges to give a smoother look. Again, this is achieved by the use of a digital memory and interpolation, with each new line formed by comparing pixel information from the preceding and succeeding lines, as well as the preceding field.

Both the line doubler and the 100Hz system take into account the effects of motion in the images – when there are significant differences between fields – to avoid blurring. The two systems can also be combined to give 64kHz scanning, or it is possible to have 50Hz non-interlaced scanning. These techniques are not confined to projectors but are used to improve the definition of large TVs and monitors, as well. Incidentally, field doubling is more effective with PAL/SECAM at 50Hz than NTSC at 60Hz; while with line doubling, the situation is reversed with the 525 lines of NTSC benefitting more than the 625 lines of PAL/SECAM. A few projectors go the whole way and are designed to accept high definition signals.

DSP is also used to generally clean up the images – reducing general noise, dot interference, cross-colour interference, ringing effects on luminance transitions, and improving edge contours and sharpness.

There is one further way of enhancing the image and that is to use a rigid curved screen instead of a flat one. This reflects more of the image-forming light back to the audience and less of the ambient light that washes-out the image. The snag is that it has a comparatively limited viewing angle, dependent on the screen's gain, with the image darkening rapidly beyond that. And if the gain is pushed too far, it produces an unacceptable hot-spot that is brighter than the rest of the image. Thus, with the latest projectors producing brighter images, the curved screen has declined in popularity. Screen gain, incidentally, is determined by using a light meter to measure how much extra white light is reflected back from the screen by comparison with a flat white surface (most screen manufacturers use a matt titanium white as the reference). The gain varies from about 1.3-2.0 for flat matt white screens, being a good compromise between even light distribution and additional brightness, to as much as 15 for curved screens.

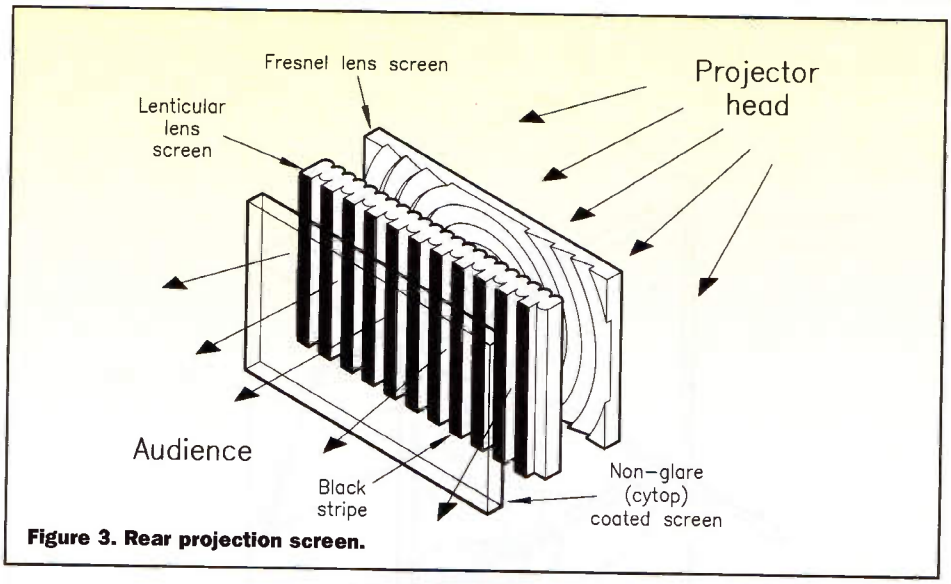

Figure 3. Rear projection screen.

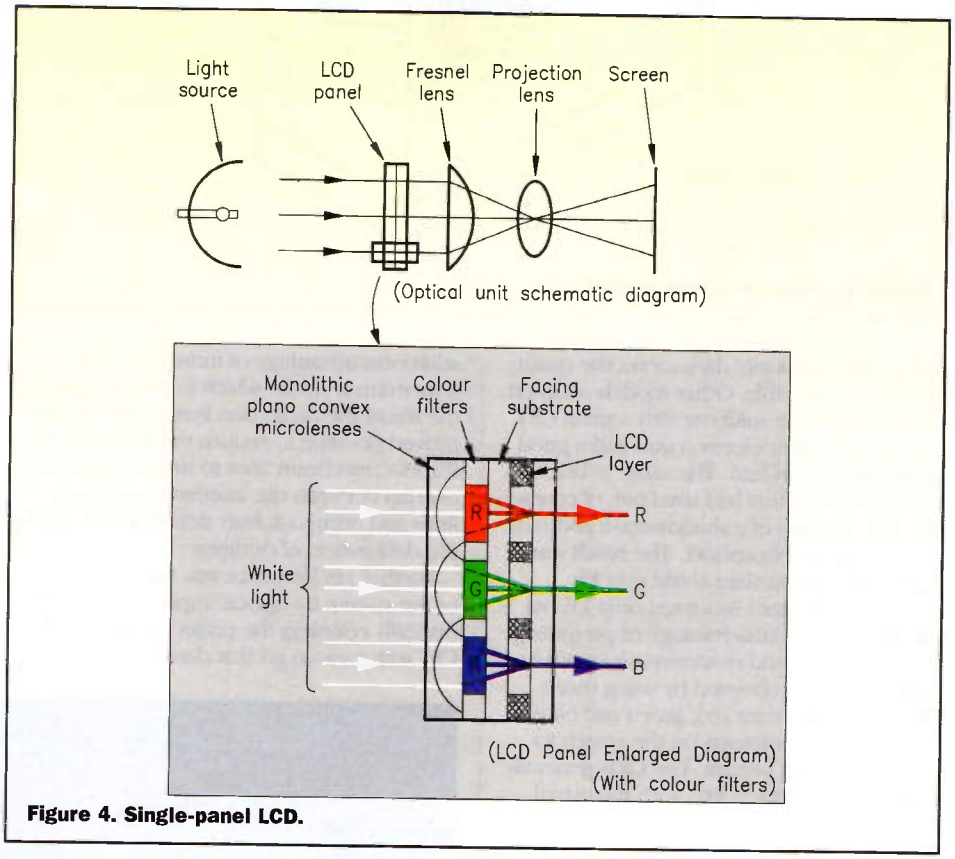

Figure 4. Single-panel LCD.

Photo 3. Sharp 'filterless' LCD.

Front projectors can also be used for rear projection on a semi-transparent screen; either by laterally reversing the image electronically or by the use of a surface-silvered mirror in the light path. There are also dedicated rear projection systems with everything built into a cabinet. As Figure 2a shows, the three CRTs with short focal length lenses are built into the bottom and reflected by two surface-silvered mirrors to the screen. An alternative arrangement is shown in Figure 2b, where the CRTs are angled upwards and reflected off a single mirror – which minimises distortion and maximises contrast.

The semi-transparent matt screen has been improved over the years to the point where the image can now be viewed in daylight or normal room lighting. This is possible because the screen absorbs much more of the ambient light than does a normal TV. As Figure 3 shows, it is backed by a fresnel lens to make the light distribution as even as possible across the screen, then lenticular lenses widen the viewing angle (which used to constitute a problem) and intensify the light, while black stripes coated onto the screen surface absorb the ambient light to improve the brightness, contrast and colour rendition. There might also be a front, anti-reflection screen (which additionally serves to protect the screen proper). Screen sizes are growing ever larger, with sizes varying between 40in. and about 70in..

Recently, it has been possible to make the light path still more compact to produce rear projectors that resemble oversized monitors, with screens of about 40in.. These more compact dimensions have also spawned the projection cube, for display purposes at exhibitions, etc. This is basically a box with a very narrow screen frame which can be used either on its own or in combination with other cubes to make a videowall. In the latter configuration, the signal(s) can be externally controlled to show individual images on each cube or one image spread across all the cubes – or a combination of both.

Rear projectors have also begun to appear that use LCD technology. Although the vast majority of LCD projectors remain front projection types that can be adapted to rear projection. LCD projectors can also make use of many of the improvements noted above, such as hybrid lenses, line doublers, etc. But a further improvement is possible in screen technology because the projected light is polarised, and having a polarised screen that will reflect light in only one plane will reduce the reflection of ambient light by 50%.

The LCD projection panel is about 3-6in., and consists of a polarising filter, a liquid crystal layer and another polarising filter with its axis of polarisation perpendicular to the first. Light from a metal halide or halogen projection lamp of 150-600W passes through the first filter and becomes plane polarised; this enables it to be directed by the liquid crystal molecules that twist by varying amounts dependent on the voltage applied so that all, some or none of the light passes through the second filter, providing the necessary variations in pixel brightness. Either a single panel or three panels are used.

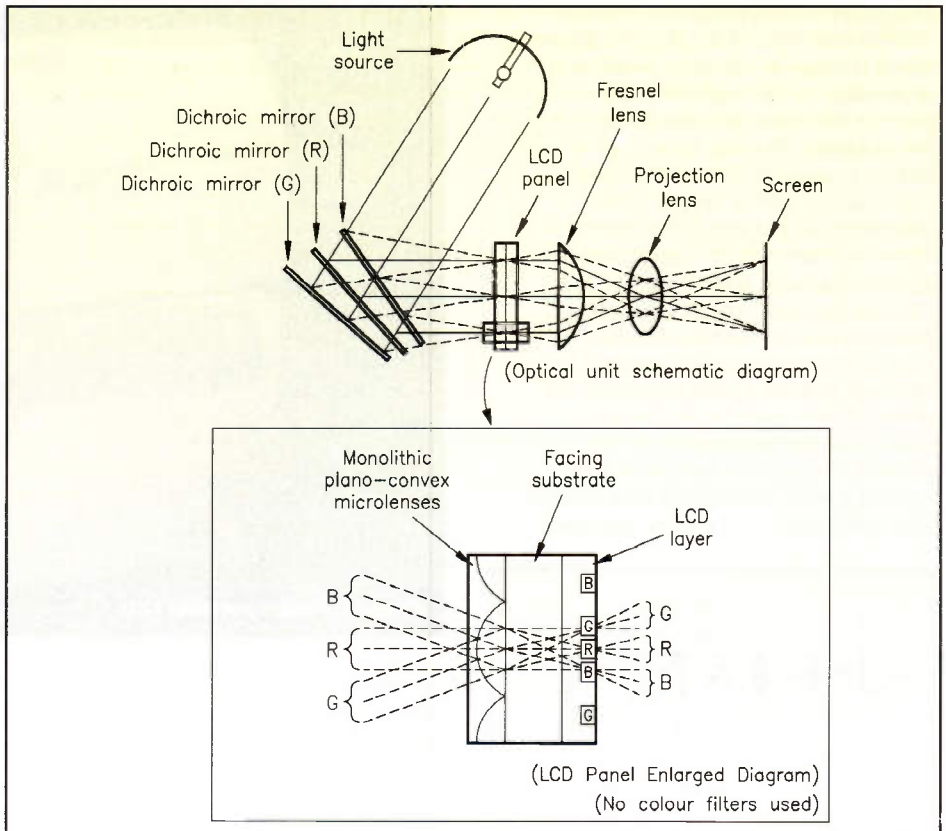

Figure 5. 'Filterless' LCD.

The single panel has microscopic red, green and blue filters covering the pixels, with the light from the projection lamp shining directly through it – as Figure 4 shows. However, in a recent development, Sharp introduced its Filter-Less technology which is illustrated in Figure 5: here, light from the lamp is split into red, green and blue beams by dichroic mirrors and each colour passes through the correct pixels, giving a brighter image. However, it does not remove the RGB pixel structure which is still magnified together with the image.

As with CRT projectors, this is removed by using three panels. Although, as the panels still have a pixel structure – albeit superimposed in this case – the images can never be completely smooth. Figure 6 shows the interior of a typical projector, which consists of two dichroic mirrors to split the light into its primary colours, two reflective surface silvered mirrors that further direct the beams, and two more dichroic mirrors to converge the image-carrying beams into one to pass through the projection lens. Having a single lens makes it possible to fit a zoom lens, which simplifies the setting-up procedure (especially as many now have remote controlled power zooming and focusing), while the fixed geometry of the LCD panels removes the need for convergence adjustments.

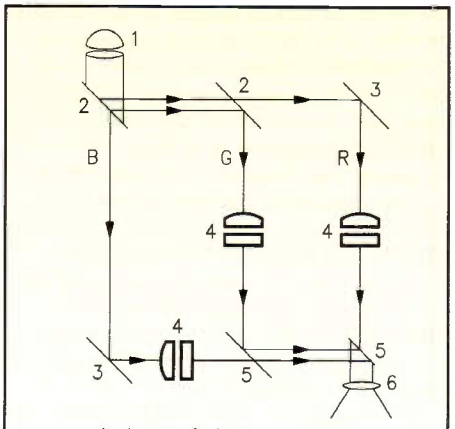

Figure 6. LCD light path.

By using a lamp, the LCD projector can give a brighter output than the CRT type. LCD projectors are also smaller and lighter than their CRT counterparts, which has made portable models a practical proposition and better suited to home cinema use, although the number of professional models is growing more quickly. A recent trend has been to reduce the size of the LCD panels to little more than 1in., with no loss of resolution, enabling projectors to be a bit smaller still. This has also meant that it is possible to use high transmission prism blocks instead of mirrors to eliminate any registration errors and minimise light interference. A further development is the use of poly silicon (PSi) thin film transistors instead of the conventional amorphous silicon TFTs used to control the individual pixels, which improves the reliability and functional qualities of the LCD panels.

An interesting variation on the LCD theme is the Hughes-JVC Image Light Amplifier. The ILA is a 32-layer 'sandwich', one of which is liquid crystal, that acts to modulate the light. The process begins with the input signal displayed on a low power, high resolution infrared CRT (see Figure 7a).

This image is then projected onto the photosensor layer of the ILA (see Figure 7b) which changes its electrical resistance depending on the brightness, the brighter the image area the lower the resistance allowing more applied voltage to pass through to the liquid crystal layer, making the molecules twist more. Light from a 750-2,500W Xenon arc lamp is then passed through a polarising beam splitter into the ILA through the liquid crystal layer. The polarised light is modulated in the same manner as a conventional LCD, although without a pixel structure, and reflected back again by the dielectric reflector to the beamsplitter which selectively passes the light according to its degree of polarisation from total to zero, and thence to the projection lens.

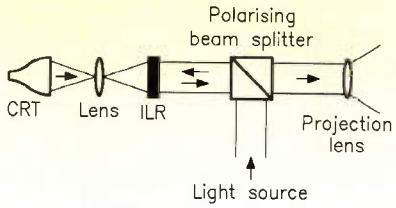

Figure 7a. Image Light Amplifier (ILA) configuration.

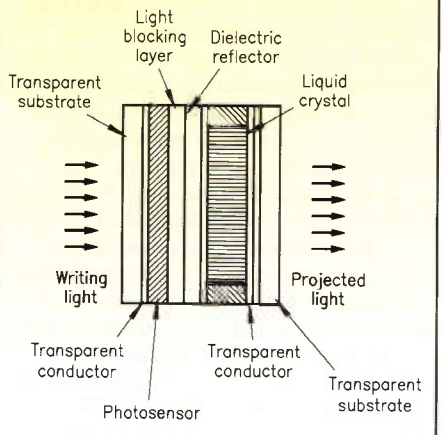

Figure 7b. ILA panel structure.

Three ILAs are used for colour, with the light split into its primary colours by dichroic mirrors. It is capable of handling all signals – including high definition and those from computers, thanks to its 100MHz RGB bandwidth – and of projecting those onto screens up to 40ft. diagonal. It can also be used for rear projection, either with a normal rear projection screen or the projector can be mounted into a console (see Figure 8), and these can be positioned side-by-side to create almost seamless viewing. The ILA system gives the best video projection quality at present – with an HDTV signal, it is almost indistinguishable from film projection, but the projectors are also the most costly (despite a recent price reduction), beginning where the others leave off.

A smaller, less expensive version of the Hughes-JVC ILA projector has been developed. This still uses three ILAs,

Photo 4. Philips portable LCD.

but the red, green and blue beams converge within the projector and pass through a single lens, and the maximum screen size is about 25ft.. An increasing number of projectors can handle computer data as well as video – thus bringing them into the multimedia age. These multiscan projectors accept a range of signals with different horizontal and vertical scan rates: typical figures are 15-35kHz horizontal and 50-70Hz vertical, but the more expensive models can go up to 15-60kHz and 35-150Hz. Although, in the majority of cases, the on-screen resolution is limited to 640 × 480 pixels, any signal with a greater resolution will have to be downconverted by digital pixel compression to match. An exception to this is the Hughes-JVC ILA and some of the more expensive CRT and LCD models. On the video side, most projectors will be able to show images with a horizontal resolution of 350-700 lines, and cope with NTSC and probably SECAM, in addition to PAL.

The TV projectors, which have a built-in tuner, can usually cope with the European transmission standards as well PAL I used in Britain. It is convenient for manufacturers to spread individual models across as many markets as possible because sales are still comparatively limited (many professional users prefer to hire a projector). The more expensive projectors will also accept HDTV signals, although not all of them will be able to project the images to their full definition, employing downconversion instead, but more are able to accept Extended Definition (EDTV) and Improved Definition (IDTV) systems. However, most projectors still use the 4:3 aspect ratio, and will, therefore, show 16:9 images in letterbox form, but the coming of digital widescreen should expedite the change in aspect ratio.

Incidentally, the digital pixel compression (DPC) that enables higher resolution signals to be accepted by projectors not actually designed for them can also be used to overcome the problem of keystone (trapezoidal) distortion due to the screen's centre being higher or lower than that of the projector's optical axis necessitating it being tilted up from the floor or down from the ceiling. DPC distorts the projected image in the opposite way to the distortion that appears on the screen – projecting an inverted trapezoid to produce the correct geometry on-screen. In this way, displacement angles of about ±30° are possible.

An alternative method for those projectors that have a single lens is to vertically shift the optical axis of that lens. This will allow about ±15° of angular displacement. Some projectors also provide for horizontally shifting the optical axis, providing still greater flexibility

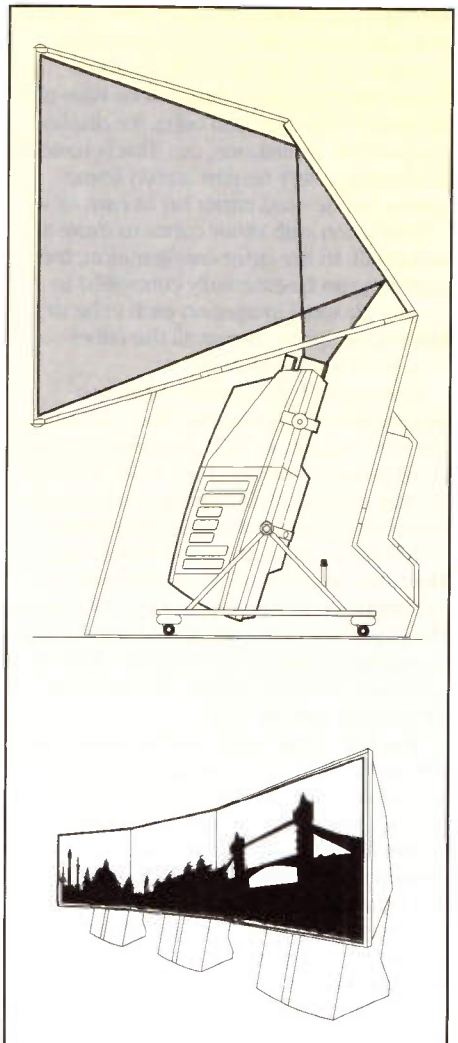

Figure 8. ILA rear projection console.

in positioning. Should the projector lack these correction facilities, and many do, then keystone distortion can only be minimised by careful positioning of screen and projector.

The image quality and convenience in setting-up and use has increased considerably over the years, but the audio side has rather lagged behind. There are two reasons for this: firstly, that it is difficult to squeeze decent speakers into a container that is full of CRTs or LCD panels, lamp and mirrors; secondly, that when the projector is in the best position for showing images, it could well be in the wrong position for listening. The exception to this is the rear projection cabinet, which has both the room for decent speakers and will be in the right place for listening to their output. Thus, some of the latest TV rear projectors have Dolby Pro-Logic Surround sound as well as NICAM digital stereo.

Other projection systems are also under development. One of these uses Digital Light Processing (DLP) with a Digital Micromirror Device (DMD) at its heart. The system was invented by Texas Instruments and a number of companies have expressed interest in this DLP technology for front and rear projection. The DMD is a panel of about 10 × 15mm, which acts as a digital light switch to form the image. The trail production version has 497,664, 16μm square plastic mirrors – one per pixel – in an 864 × 576 array.

The mirrors are fabricated on a Static RAM with one memory cell per pixel. As Figure 9 (left) shows, each mirror is mounted on a support post attached to a pair of torsion hinges that allow the mirror to rock back and forth by ±10° in response to the attraction of an electrostatic field produced by electrodes underneath. At one extreme, the incident light from a projection lamp is reflected through the projection lens (on); at the other extreme, it is reflected away from it to a light absorber (off). The length of time that it is on determines the brightness of the pixel and this is controlled by an 8-bit command which gives 256 possible durations. It thus forms a 256-level grey-scale image, to which colour is added by the light.

Because it is a reflective system, the projected images can be very bright for a given lamp wattage. Nokia has demonstrated a prototype

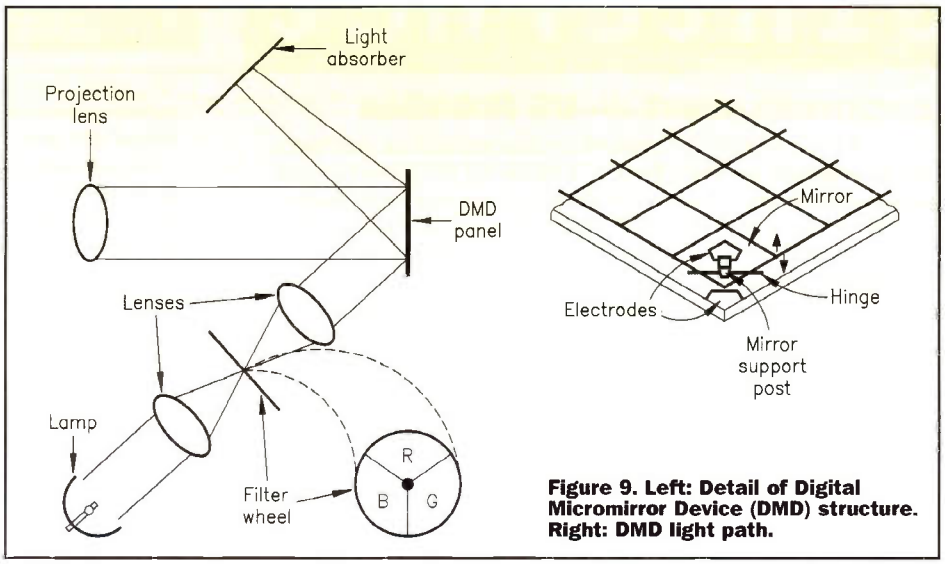

Figure 9. Left: Detail of Digital Micromirror Device (DMD) structure. Right: DMD light path.

50in. 16:9 rear projection cabinet intended for the consumer market. As Figure 9 (right) shows, this used a single DMD panel with the light from a projection lamp passing through a red, green and blue filter wheel rotating in synchronism with the images formed by the mirrors from the digital RGB signals. Since then, the Finnish company has sold its consumer products brand to Semi-Tech Global – who also own Akai. Despite this hiatus, a launch is still expected 'in the not too distant future'.

An alternative, though more expensive, method is to use three DMD panels and have the light split into its primary colours. This will give still brighter images: firstly, due to the greater reflective area; secondly, by having the red, green and blue images on simultaneously instead of sequentially; and thirdly, by doing away with the filters. Removing the rather archaic filter wheel will have the added advantage of preventing any potential mechanical failures. However, there still remains the potential problem of the micromirrors sticking on or off and producing bright or dark spots that, once noticed, would become irritating. However, this is obviously something that companies are well aware of and will do their utmost to minimise over a reasonable lifespan for the device.

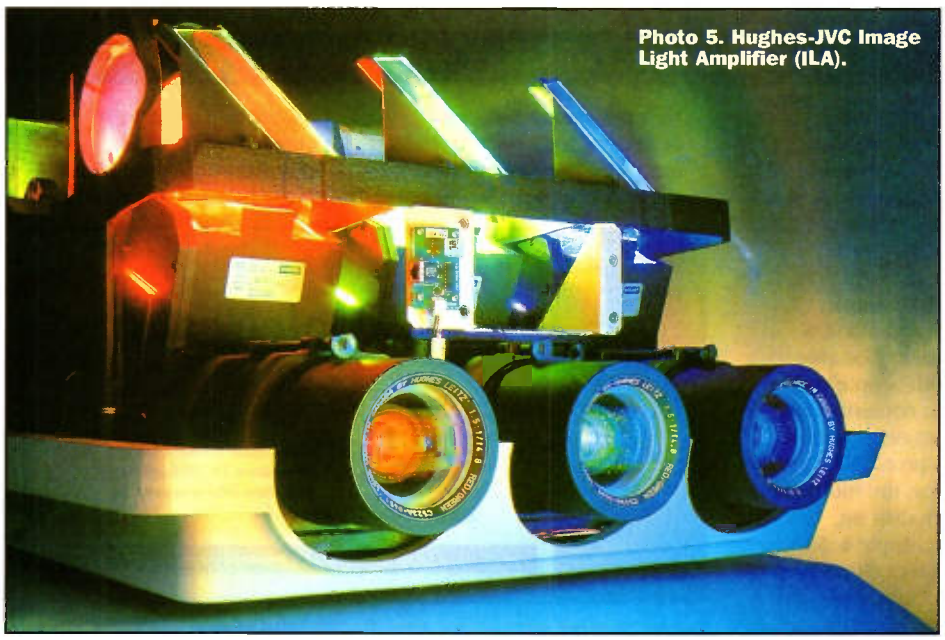

Photo 5. Hughes-JVC Image Light Amplifier (ILA).

Looking further into the future, there are developments going on to produce systems using modulated red, green and blue lasers scanning very quickly. Daimler Benz Aerospace, in cooperation with Schneider, have demonstrated a laser projection TV prototype. But progress seems to be slow and information is in short supply, giving the impression that a launch is probably some years away.

The projection systems considered so far have been confined to a straightforward means of enlarging 2D images, but there have been many attempts by companies to develop 3D projection systems, the most recent of which has been Sanyo – whose efforts you will have seen if you went to Live '95. Two models were on show – a front projection system and a rear projection cabinet. The former employed two LCD projectors and a 100in. 'silver' screen, with the projection beams polarised vertically and horizontally to match the eyepieces of the polarised spectacles. The latter also employed two LCD projectors but, instead of spectacles, utilised a double lenticular screen whose vertical half-cylindrical lenses produced the two separate images. The only snag being that the viewing angle and distance from the 40in. screen was very limited, allowing only two viewers at a time. No 3D system has ever had more than short-term success, and most have had no success at all, so Sanyo's efforts could be in vain.

Whether CRL's Suspended Image System (SIS) will fare any better remains to be seen. This uses a large area planar beamsplitter to produce an image that is suspended in space, and is compatible with all existing video standards. Images up to life-size are possible, and there can be direct interaction with the suspended image using CRL's 'suspended touch screen' technology – which should make the SIS ideal for display and multimedia uses.

Video projectors have come a long way since the early black and white models, and certainly their future in the various professional fields seems to be assured. However, whether the advances will be sufficient to significantly expand the home market beyond those with a passion for recreating the cinema experience remains to be seen. The large screen CRT still gives very good quality for the price, and the ultimate goal remains the wall screen TV.

@Internet

Rockwell/Lucent -v- US Robotics

The race is on to push the limits of modem technology ever faster. Still reeling from the aftereffects of introducing 33.6k-bps modems into the telephone network, and allowing computer users faster Internet access than previous 28.8k-bps modems allowed, it seems there's more than one pretender to the crown of the fastest method yet to be around. US Robotics is developing its x2 modem technology which will allow 56k-bps transmission over ordinary analogue telephone lines. It looks like the x2 modems will be the first to get to market, but Rockwell (manufacturer of around 75% of the world's chipsets in modems) is close behind with its K56 Plus technology, which is designed to give speeds up to 64k-bps over ordinary telephone lines. The two methods are currently incompatible.

Unfortunately, having two similar but incompatible technologies is good in that it spurs on competitive development to force products along at high speed, but it does mean that the consumer usually has to wait until one technology becomes standard before jumping on the bandwagon and buying a new modem. Let's hope that US Robotics and Rockwell can get their heads together to co-develop a compatible system – sooner rather than later, then we'll all know where the bandwagon is heading.

Both systems are similar in that they rely on the simple fact that many (hopefully, most) connections the modems will be used for are over short local telephone lines. After all, the vast majority of computer users connecting to the Internet (which will, presumably, be the largest market for these modems) do so over local connections. While previously, 33.6k-bps was thought to be the maximum data rate limit for an analogue telephone connection, the fact that short connections are usual for home to Internet connections means that the modems *should* be able to eliminate the interferences of the analogue line.

Navigator Leads UK

The Inteco Interactive Home report published this month shows that in the UK, 38% of high-income households, or those with an income over £25,000, browsing the Web say they are using Microsoft Internet Explorer, compared with 48% for Netscape Navigator. High-income households account for nearly 70% of home Internet usage in the UK. The study also shows that more than a quarter of Navigator users are using Explorer as well.

In Germany, only 26% of households are using Explorer against 51% using Navigator. In France, Navigator is still ahead but the French market is very small compared to the other two.

For further details, check: **http://www.inteco.com/ecis1.html**.

MSN Mimics TV

Microsoft is shipping out thousands of CD-ROMs containing the new software needed to tap into the latest version of Microsoft Network. The revamped service is packaging its offerings into TV-style channels, using Microsoft's ActiveX software to incorporate more animated content into its Web pages.

For further details, check: **http://www.uk.msn.com**.

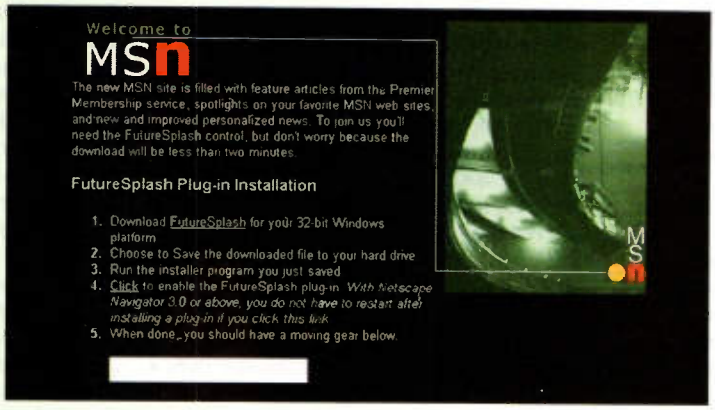

Ping Security Flaw

Software programmers are scrambling to fix a recently documented security flaw found in the 'ping' Internet function, which is used to check whether a piece of hardware is properly hooked up to a network. The problem arises when a computer hacker sends a booby-trapped ping command, nicknamed the 'ping of death', to a targeted computer.

For further details, check: **http://www.sophist.demon.co.uk/ping**.

Analyst Predicts no Future for Internet TV

A Dataquest poll of 7,000 households indicates that a 93% of the respondents are not interested in buying an Internet-enabled TV set or set-top box. Furthermore, while companies such as WebTV have primarily targeted consumers who don't yet own a PC, the Dataquest survey results indicate that households with PCs are more likely to buy an Internet device that works with their television set than ones without.

For further details, check: **http://www.dataquest.com**.

Apple Releases Beta of Personal Web Server

Apple Computer has released a beta version of personal Web server technology, and has licensed the technology from Maxum development. As a result, users of networked Macintosh computers and Mac OS compatibles will be able to publish both simple and multimedia content across the Internet or an intranet using Web protocols.

Built upon the foundation of Maxum's existing technology, Apple will make available the personal Web server technology to allow Web publishing without dedicating a separate machine. The new product enhances Apple's easy-to-use product line of Internet publishing capabilities.

For further details, check: **http://applenet.apple.com**.

Surf the Internet with Voice

IBM has announced the availability of a beta version of a new speech recognition software application that lets people navigate the Internet by talking. The product, called VoiceType Connection NS Edition, works with the 32-bit Windows '95 and Netscape Navigator 3.0 and is available as a free download from the Internet.

Jan Winston, worldwide speech systems manager at IBM told *Electronics and Beyond*, "This is a significant step in bringing about much wider acceptance of voice recognition software. VoiceType Connection NS allows people to easily explore and find their way through the unique world of information found on the Internet using something that is natural and familiar – their voice."

Using VoiceType Connection NS Edition, people will be able to use their voice to control Netscape Navigator 3.0/3.01 to access Web sites, without speaking or typing an entire URL. This allows them to simply ask the computer to go to a site on the Internet and move around within it by talking to the computer.

Using IBM's text word spotting technology, people can surf by speaking only a few of the words in a hotlink – creating voice-enabled shortcuts to their favourite Web sites. Netscape Navigator users will see a few changes in the interface, but will not notice any significant differences, with the addition of speech recognition.

The beta version of VoiceType Connection NS Edition is currently available as a download from the Internet at **http://www.software.ibm.com/is/voicetype/vtconn/vtconn.html**. The product works with Netscape Navigator 3.0/3.01 running on most Pentium computers available today, which are equipped with a microphone and an industry-standard sound card, such as Sound Blaster, or IBM's Mwave media processor.

Controlling Traffic on the Internet

Cisco Systems, along with Sun Microsystems, Informix, Netcom Online Communication Services and others, is backing technology developed by Tibco that is designed to ease data gridlock on the Internet.

Tibco's technology moves an e-mail message through the Internet pipeline, and then replicates it at the end of the process for multiple distribution, rather than the current broadcasting system that simultaneously sends thousands of messages to thousands of individuals.

The consortium plans to submit a proposal to the Internet Engineering Task Force next year to adopt Tibco's technology as a non-proprietary standard. For further details, check: **http://www.tibco.com**.

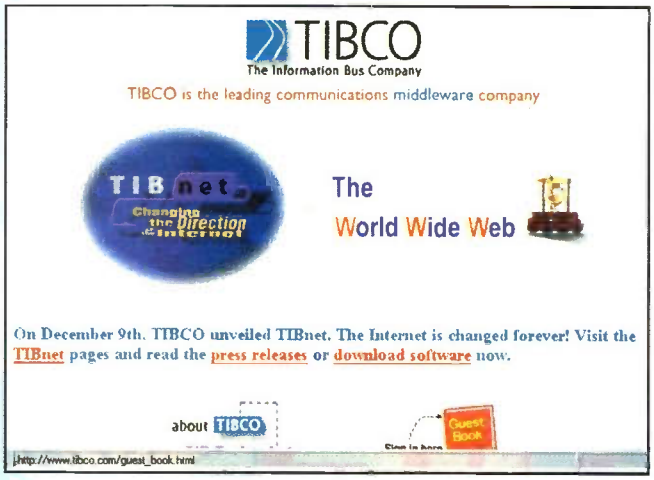

Site Survey

The month's destinations

See page 78 for this month's destinations

Claris Home Page

There's a clutch of what-you-see-is-what-you-get HTML creation tools around these days. One of the best is Claris Home Page, which is an extremely simple to use yet fully capable HTML editor. It features the best of drag-and-drop abilities, a fully integrated table editor, and best of all, you don't need to know a single line of HTML code – Home Page generates it all for you in the background and hides it away so you don't get bogged down. Claris has made available a 30-day trial demonstration program on its ftp site which is worth the 2M-byte download time (wish I had a new 64k-bps modem!), if only to see the ease with which anyone can create WWW pages. It leaves most of the competition standing in the swamp of HTML tags they need. True, it's not got the raw power the likes of HoTMetaL Pro has, say, but it's a heck of lot nicer to use, and far quicker to get results.

Windows users get it from: **ftp://ftp.claris.com/pub/USA-Windows/**, while Mac users get it from: **ftp://ftp.claris.com/pub/USA-Macintosh/**.

MTV Turns the Tables

Viacom's MTV Networks has come up with a new way to make its Web investment pay off. In an innovative move, the company is putting the squeeze on online service providers, demanding that they pay a million-dollar license fee or risk having their subscribers blocked from viewing MTV's Web site.

The move marks a new step in companies' strategies to make money off the Internet. Usually, any fees charged to access a Web site are paid by the individual. Most companies make their Web sites available for free or charge a small subscription fee, but sell advertisements to support their efforts.

For further details, check: **http://www.mtv.com/main1.html**

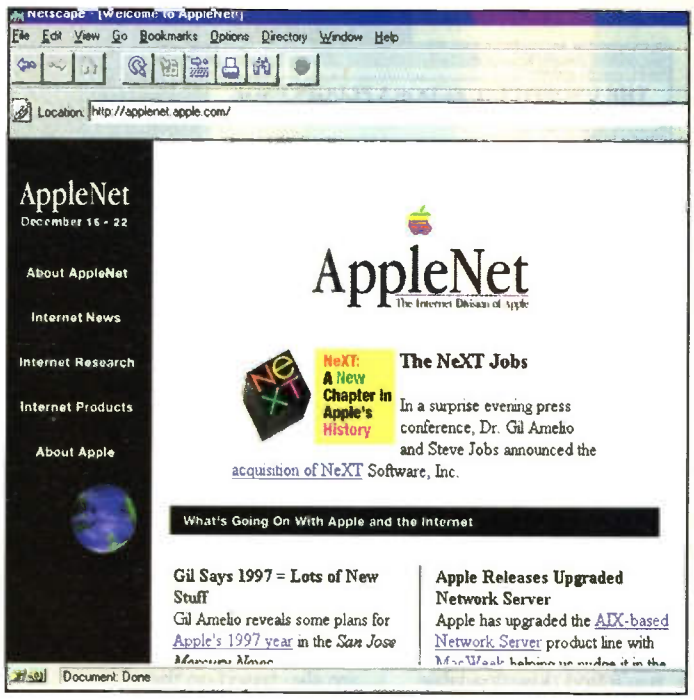

@Internet

Tables with style

We've looked at this one before, but it's worth taking another look at TableWorks, as it's recently undergone an upgrade to a new version. TableWorks effectively lets you create hypertext markup language (HTML) pages, ready for uploading on to a World Wide Web server by letting you create pages made entirely of tables. So what?, you might ask. What use is a table when you have graphics or text to incorporate?

Well, TableWorks lets you do this too, by letting you edit a table to suit the requirement. You can merge table cells horizontally and vertically, you can edit individual cell colour, place graphics in cells, show or make invisible cell borders and so on. It's a wonderfully neat way to create HTML pages and practically everything's possible with it. TableWorks is a shareware product, priced far more cheaply than commercial rivals (some of which don't have anywhere near the same power or ease-of-use, and is a Mac-only product. A trial version is available for download from: **http://www.tableworks.com**. Try it for yourself!

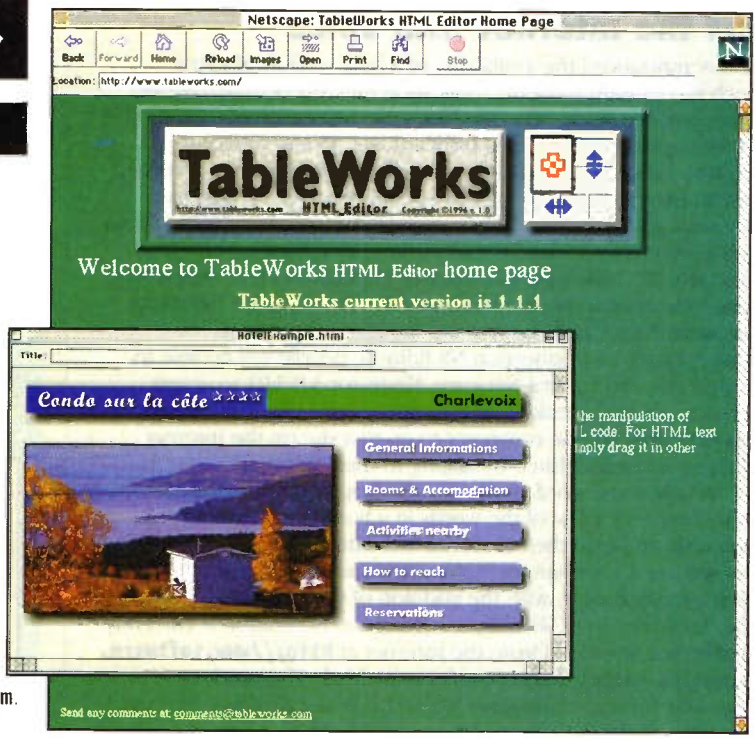

Site Survey

The month's destinations

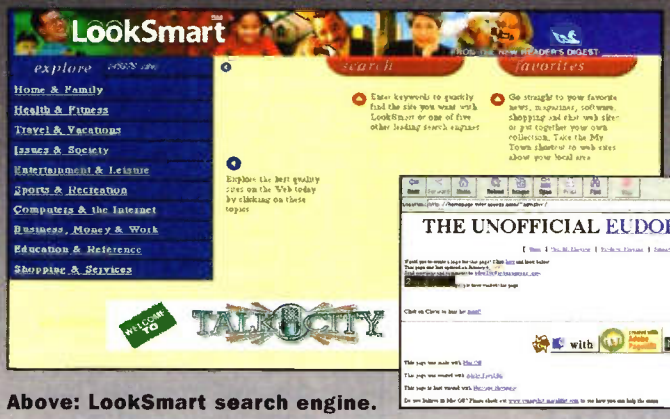

Above: LookSmart search engine.

Below: The Unofficial Eudora Plug-In Page.

Below: Apple QuickTime site.

Above: StaPRO internet site.

Shuttle along to: **http://mulwala.looksmart.com:8080/** to see a nice-looking new search engine-cum-directory of cool Web-spots for you to surf.

If you have yet to understand the inner workings of the World Wide Web, and want to get a little training about it, take a gander at StaPRO at: **http://www2.eis.net.au/~statham/**, which is a self-styled home of Internet training modules for free download and use. While it's a comparatively new site (well, almost everything in the Internet *is* new, isn't it?), new modules are planned, so it's a site to bookmark and keep your eye on.

A couple of sites which could do wonders for your Internet and e-mail enjoyment are Apple's QuickTime home page at: **http://quicktime.apple.com**, and the Unofficial Eudora Plugin Page, at: **http://homepage.interacces.com/~admslvr/**. At the Apple site, you'll find downloadable versions of Apple's QuickTime plug-in for most Web browsers that support plug-in technology (such as Netscape Navigator and Microsoft Internet Explorer) for MacOS and Windows variants. Already the norm, and fast becoming the standard for multimedia computer video graphics and sound, QuickTime is used on most Websites for such, and the latest version of the plug-in offers several improvements. Many multimedia CD-ROMs are also based on the QuickTime technology.

Eudora is the leading e-mail program, and it is so capable right out of the box that its ability to employ plug-ins is a little used feature. This is a pity, and the Unofficial Eudora Plugin Page should put right that fact. Just about every Eudora plug-in ever created for Eudora is available for download here, and while some are pretty arcane, there are several which can enhance your enjoyment of the program.

ELECTRONICS and Beyond

next issue

Sound Generators

Circuit examples demonstrating how to use the new breed of inexpensive sound generator ICs.

Circuit Maker

An Alarm Zone Filter to reduce false triggering of household burglar alarm systems and a unit for synchrolinking multiple Panasonic video recorders.

PLUS Air Time Billing from Alan Simpson takes a close look into how the telecommunications industry goes about the deft art of billing its customers.

Part 2 of Lightning: Its Nature by Greg Grant, further details past and present understanding of lightning, its causes and effects.

Acoustics and Hearing from Douglas Clarkson describes how sound waves can be manipulated to alter our perception of the noise heard.

Shortwave Listening Today from Ian Poole tunes into the fascinating world of amateur and CB radio, and reveals the meaning behind Q, RST, SINPO and Morse codes.

Digital Cameras enable capturing of images for redisplay on computers. Reg Miles investigates the technology and forthcoming developments.

Part 4 of Audio Delay Line Systems by Ray Marston looks at the Holtek HT8955A low-cost digital delay lineIC.

The sixth episode of PIC Programming by Stephen Waddington covers design tools used to create applications around the PIC architecture.

In Part 3 of What's in a Name?, Greg Grant recounts the pioneering designers of the oscillator.

Surface Mount Technology Today and Tomorrow from Ian Davidson picks and places present and future developments in component miniaturisation.

Martin Pipe eagerly reviews the PowerMac 9500/200 and AKD General Coverage Receiver.

Heater Temperature Controller

Provides accurate control of temperature within an enclosed space – ideal for DIY wine-making!

Video Optical Isolator

Eliminate interference and hum from video equipment and improve the quality of your replayed pictures using this useful project.

Centronics I/O Interface

Part 2 shows how to complete and use this useful PC interfacing project.

Bicycle Alarm

Protect your valuable bike and its wheels from theft with this frame-mounted loop alarm.

Issue 112 on sale
Friday 7th March

ELECTRONICS and Beyond
BRITAIN'S BEST MAGAZINE FOR ELECTRONICS

Project Ratings

Projects presented in this issue are rated on a 1 to 5 for ease or difficulty of construction to help you decide whether it is within your construction capabilities before you undertake the project. The ratings are as follows:

Simple to build and understand and suitable for absolute beginners. Basic of tools required (e.g., soldering, side cutters, pliers, wire strippers, and screwdriver). Test gear not required and no setting-up needed.

Easy to build, but not suitable for absolute beginners. Some test gear (e.g. multimeter) may be required, and may also need setting-up or testing.

Average. Some skill in construction or more extensive setting-up required.

Advanced. Fairly high level of skill in construction, specialised test gear or setting-up may be required.

Complex. High level of skill in construction, specialised test gear may be required. Construction may involve complex wiring. Recommended for skilled constructors only.

Ordering Information

Kits, components and products stocked at Maplin can be easily obtained in a number of ways: ❶ Visit your local Maplin store, where you will find a wide range of electronic products. If you do not know where your nearest store is, telephone (01702) 554002. To avoid disappointment when intending to purchase products from a Maplin store, customers are advised to check availability before travelling any distance; ❷ Write your order on the form printed in this issue and send it to Maplin Electronics PLC, P.O. Box 777, Rayleigh, Essex, SS6 8LU. Payment can be made using Cheque, Postal Order, or Credit Card; ❸ Telephone your order, call the Maplin Electronics Credit Card Hotline on (01702) 554000; ❹ If you have a personal computer equipped with a MODEM, dial up Maplin's 24-hour on-line database and ordering service, CashTel. CashTel supports 300-, 1200- and 2400-baud MODEMs using CCITT tones. The format is 8 data bits, 1 stop bit, no parity, full duplex with Xon/Xoff handshaking. All existing customers with a Maplin customer number can access the system by simply dialling (01702) 552941. If you do not have a customer number, telephone (01702) 554002 and we will happily issue you with one. Payment can be made by credit card; ❺ If you have a tone dial (DTMF) telephone or a pocket tone dialler, you can access our computer system and place your orders directly onto the Maplin computer 24 hours a day by simply dialling (01702) 556751. You will need a Maplin customer number and a personal identification number (PIN) to access the system; ❻ Overseas customers can place orders through Maplin Export, P.O. Box 777, Rayleigh, Essex SS6 8LU, England; telephone +44 1702 554000 Ext. 376, 327 or 351; Fax +44 1702 554001. Full details of all the methods of ordering from Maplin can be found in the current Maplin Catalogue.

Internet

You can contact Maplin Electronics via e-mail at `<recipient>@maplin.co.uk` or visit the Maplin web site at `http://www.maplin.co.uk`.

Prices

Prices of products and services available from Maplin shown in this issue, include VAT at 17·5% (except items marked NV which are rated at 0%). Prices are valid until 28th February 1997 (errors and omissions excluded). Prices shown do not include mail order postage and handling charges. Please add £2.95 to all UK orders under £30.00. Orders over £30.00 and MPS Account Holding customers are exempt from carriage charges.

Technical Enquires

If you have a technical enquiry relating to Maplin projects, components and products featured in *Electronics and Beyond*, the Technical Sales Dept. may be able to help. You can obtain help in several ways; ❶ Over the phone, telephone (01702) 556001 between 9.00am and 5.30pm Monday to Friday, except public holidays; ❷ By sending a facsimile, Fax (01702) 554001; ❸ Or by writing to Technical Sales, Maplin Electronics PLC., P.O. Box 777, Rayleigh, Essex, SS6 8LU. Don't forget to include a stamped self-addressed envelope if you want a written reply! Technical Sales are unable to answer enquires relating to third-party products or components which are not stocked by Maplin.

Maplin 'Get You Working' Service

If you get completely stuck with your project and you are unable to get it working, take advantage of the Maplin 'Get You Working' Service. This service is available for all Maplin kits and projects with the exception of: 'Data Files'; projects not built on Maplin ready etched PCBs; projects built with the majority of components not supplied by Maplin; Circuit Maker ideas; Mini-Circuits or other similar 'building block' and 'application' circuits. To take advantage of the service return the complete kit to: Returns Department, Maplin Electronics PLC., P.O. Box 777, Rayleigh, Essex, SS6 8LU. Enclose a cheque or Postal Order for the servicing cost (minimum £17) as indicated in the current Maplin Catalogue. If the fault is due to any error on our part, the project will be repaired free of charge. If the fault is due to any error on your part, you will be charged the standard servicing cost, plus parts.

TECHNOLOGY WATCH

with Martin Pipe

This month, I'll be talking about the latest in domestic videography. In the last 10 years, there have been subtle improvements to existing low-resolution tape formats, such as 8mm and VHS. VCRs offered better sound quality, the potential for stereo and more flexibility with the soundtracks. Then the high-band domestic formats, such as Hi-8 and S-VHS, yielded a better picture quality.

With such equipment at their disposal, videomaking became a serious hobby for many. Enthusiasts dabbled with the creative possibilities of audio dubbing (replacing the camcorder-derived soundtrack with another), using an audio mixer to add background audio effects and insert-editing (replacing a section of video while leaving the audio soundtrack alone). As camcorders became more popular, specialist magazines sprung up to teach technique, and film-makers' clubs were formed around the country with an enthusiasm unknown since the heady days of Super 8 cine film.

Off-board gadgetry available to the enthusiast allowed titles and sub-titles to be added, while video mixers gave users the opportunity to mix the video signals from non-synchronised sources, such as a VCR and a camcorder, and feed them into a master recording VCR. Such mixers offered transitions such as wipes and dissolves, the likes of which had only been seen in TV studios. Amateur films had the potential of never looking so good – a far cry from the days of the 'Smith and Jones home video'. Although production values are often good, the technical limitations of analogue domestic formats let the side down.

The potential for true broadcast quality is now with us, thanks to the latest generation of digital domestic camcorders, which use a standard known as DVC (Digital Video Cassette). DVC is the most radical advance in home video technology since the invention of VHS in 1976. At present, the equipment is expensive, but price is rarely a barrier to serious enthusiasts, semi-professional users – and, the well-heeled early 'adopters' who are quite happy to be 'milked' if it means being first on the block with the latest toy.

Exactly what 'broadcast quality' is these days is a matter for discussion. Hi-band domestic recordings now make it with alarming regularity onto news programmes, specialist community broadcast slots like Video Nation, and factual strands such as *Police Stop!* Not to mention the often appalling technical standards of certain satellite broadcasters, some of the outpourings from which are no better than VHS quality. It's what comes of low budgets and even lower viewing figures, I suppose. There's an argument that, by today's standards, DVC has the potential for greater than broadcast quality.

DVC is currently supported by four main video manufacturers – Sony, JVC, Panasonic and Sharp. The camcorders use a tiny 1 hour cassette that's even smaller than the 8mm tapes familiar to users of existing camcorder users. This enables tiny camcorders to be produced. The 1800 JVC GR-DV1 occupies a volume not much greater than that of an old cartridge (still) film camera of yesteryear. Such levels of portability improve handling, and enable video films to be taken in situations previously considered impractical. The 10 DVC tapes include a memory chip that stores time and shoot details of the recording. DVC supports a horizontal resolution of 500 lines – compare this with the 250 or so from 8mm or VHS, or the 350 from high-band formats.

Tape-related noise factors, such as jitter and colour (chroma) bleed, are also pretty much non-existent. The only noise that's usually apparent are the minute amounts from the CCD camera head itself. DVC is an 8-bit system, and the luminance (Y) and component chrominance (Red-Y [U] and Blue-Y [V]) parts of the signal are handled separately. Broadcast equipment also uses this system, which is known as YUV. The resultant data-stream is significant, and so on-the-fly data compression (at a rate of 5:1) is used to generate a datastream of around 25M-bps, which is low enough to be recorded with a conventional helical-scan tape system. An error correction system reduced the effects of tape dropouts and the like. Audio is 12-bit stereo digital – not quite CD quality in terms of resolution, but certainly better than VHS edge-track, and at least as good as the FM systems used by 8mm camcorders and upmarket (S)VHS models. In many cases, the sound quality is limited by the quality of the camcorder's built-in mike or – in the case of one Sony model – a noisier-than-usual mike preamp.

There's also a DVC home-deck, which takes enlarged 50 (ouch!) cassettes that will record for 3 hours. The 3,300 Sony DHR-1000 – the most expensive home VCR ever – will also accept the smaller camcorder cassettes. The machine has a built-in Nicam TV tuner, VideoPlus timer, PALplus recording (useless in the UK!), CD-quality 16-bit stereo recording/playback capability (it also handles the 12-bit stereo of camcorder recordings), and a host of editing features that make it a camcorder enthusiast's dream. One of the more interesting features of the DHR-1000 is an IEEE-1394 terminal, which is also known as a 'Firewire' port. Originally developed by Apple, Firewire is essentially a high-speed serial interface, and will support 63 daisy-chained devices and transfer rates up to 400M-bps.

Firewire will play an important part in the development of domestic and semi-professional multimedia 'networks', linking up video recorders, camcorders, computers, DVD (Digital Versatile Disc) players and the like. There are some implications for the pirating of DVD movies, since DVC does not include a DAT SCMS-type copyright-protection system. DVD drives for PCs that use Firewire (rather than SCSI or IDE) as an interface are anticipated. It is likely that manufacturers – which these days have a healthy say in the software business – will use cost, rather than electronic, engineering to make piracy economically unviable (one can argue that this is being done with the high prices of blank CD-Rs!).

Some DVC camcorders, noticeably Sony models, also have a Firewire interface. Connect one up to your Sony DHR-1000, and you'll be able to make edited copies of your camcorder tapes that exhibit no generation loss – something enthusiasts have desired for years. You can't do this with analogue, each successive copy deteriorates. This system, known as linear video editing, dates back to the earliest days of home video. This essentially involves transferring the wanted sections of the original film across in the order deemed most appropriate.

Firewire gives you rather more potential, however. Expect to see Firewire PCI interface boards, from companies like Adaptec, arrive soon. You'll be able to transfer DVC data to a PC, and edit it non-linearly, with software like Adobe's Premiere. With Premiere, you place video clips on timelines, join them together with a range of powerful broadcast-quality effects and transitions, and add titles and sound effects. The results can be outstanding and with no loss in quality – although final 'rendering' of your assembled movie can take hours. Premiere is already an industry standard – you can already edit video on a powerful PC, after digitising it with a Motion-JPEG capture card and storing it on your hard disk as an .AVI file. After treatment with Premiere, the final edited .AVI file is played back in real time, the capture card converting it into PAL for analogue recording. With DVC, there's no need for these intermediate conversion stages.

E-mail your comments or suggestions to Martin Pipe at whatnet@cix.compulink.co.uk.

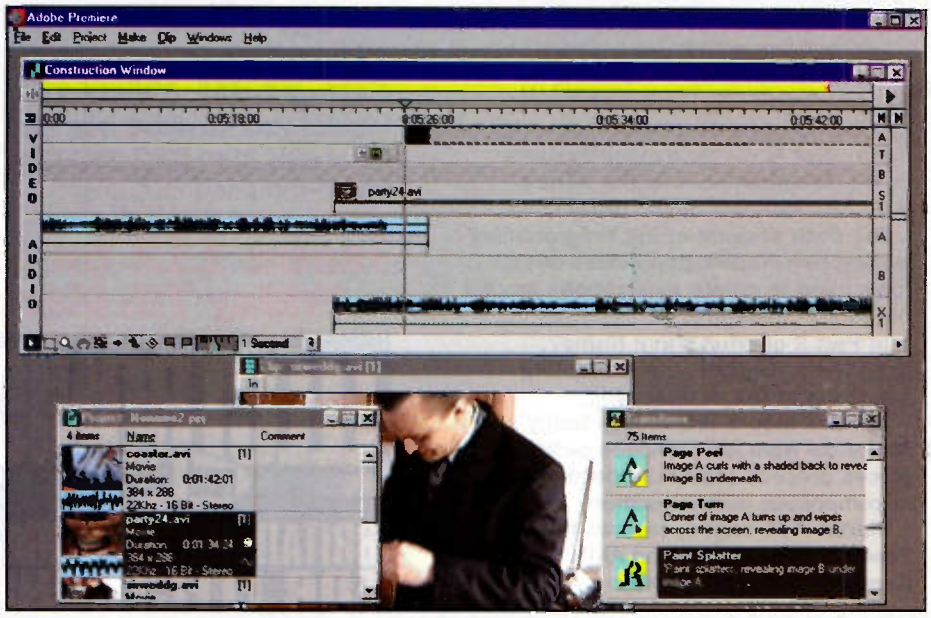

ELECTRONICS and Beyond

SUBSCRIBER'S SPECIAL OFFERS

SUBSCRIBE TODAY AND QUALIFY FOR THESE AMAZING SAVINGS!

HURRY! OFFERS END 28TH FEBRUARY 1997

FM RADIO/ ALARM

CATALOGUE PRICE £10.09

SUBSCRIBERS' PRICE £5.99

SAVE £4.10

Code 51959

CAR IONIZER

CATALOGUE PRICE £12.99

SUBSCRIBERS' PRICE £8.99

SAVE £4

Code 51960

AIR COMPRESS 220PSI

CATALOGUE PRICE £14.99

SUBSCRIBERS' PRICE £10.99

SAVE £4

Code 51961

MULTI SOLAR CHARGER

CATALOGUE PRICE £9.99

SUBSCRIBERS' PRICE £6.99

SAVE £3

Code 51957

TYRE PRESSURE GAUGE

CATALOGUE PRICE £9.99

SUBSCRIBERS' PRICE £6.99

Code 51962

SAVE £3

SUBSCRIBE TODAY see page 5

As a fully paid-up subscriber you can use the special Subscriber-only order codes and save up to 40%

When ordering any of these special offers which apply only for Subscribers and new Subscribers of *Electronics and Beyond*, please quote your Subscribers' Membership number (telephone Customer Services on 01702 554002 if not sure) and the special order code number. All items are subject to availablility. Prices include VAT. Catalogue prices refer to the 1997 Maplin MPS Catalogue. Overseas subscribers telephone +44 1702 554000 Ext. 326 for carriage charges. A £2.95 Carriage Charge will apply to all UK orders under £30.00 (MPS Account Holding Customers exempt).

The indispensable tool for DIY enthusiasts, hobbyists and students, amateurs and professionals in the world of electronics...

It's all in here!

It's at your local Maplin store

With more than 40 stores nationwide and many new stores on the way, there should be a Maplin store near you.

Over 18,000 high quality products

Everything you could want from the fascinating world of electronics, – and all in full colour.

Same day despatch

Every order is processed on the day of your call. 24 hour ordering – see catalogue for details.

Over £50 in discount vouchers

There's more than £50 in vouchers inside to save you even more money.

Free technical support

Available on all products. Call 01702 554001

New! Updated twice a year

Now it's produced in March and September, you can be sure the products are right up to date.

25 years of experience

Britain's best selling electronics catalogue is now in its 25th year. Nobody can match our experience.

Free delivery

There's no delivery charge on orders over £30 (inclusive of VAT) or any size business account order.

Only £3.45

Available at WH Smith, John Menzies or any Maplin store, or you can order your copy direct on 01702 554000 (add 50p for P&P).
If you live outside the UK send £8.45 or 21 IRCs for airmail in Europe or surface mail outside Europe; £16.00 or 37 IRCs for airmail outside Europe to: Maplin MPS, P.O. Box 777, Rayleigh, Essex, England SS6 8LU.

MPS
MAPLIN PROFESSIONAL

Priority Reference Code MA025