ELECTRONICS
The Maplin Magazine

FEB-MAR'89·£1.00
IR £1.52

Record your voice digitally with this amazingly simple project!

Link-up your video recorders using the Video Dubber project.

Data File on the LM1875, a versatile 20W power amp!

Articles on Zonephones, loudspeakers, radio, & more.

Plus reviews, letters from readers and news pages!

NEW LOOK in Full Colour

CONTENTS

FEBRUARY TO MARCH 1989 VOL.8 No.30

EDITORIAL

I was extremely pleased with the positive response by readers to the new style magazine and welcome the numerous suggestions received for ideas on articles and projects for the future, keep them coming! If you have any thoughts on what you would like to see in the magazine, write to me and I will give each suggestion due consideration. In this way we can improve the magazine even further. The cover feature is a superb digital record and playback sound system which will have many applications in the home or office. There's a fascinating video dubber project for those wishing to link 2 or 3 VCR's together and another project to give improved audio and video signals from TV sets to VCR's. The first of our home hobbyists interviews shows just what an 'amateur' can do with his self taught electronics knowledge and we look at the new CT2 cordless 'zonephones' which are coming onto the market in the near future.
Finally, I hope you enjoy this issue as much as you seem to have enjoyed the last one and I look forward to meeting you again in the next edition. Read on and enjoy!

R. T. Smith

Editor Roy Smith **Technical Editors** Dave Goodman, Chris Barlow, Gavin Cheesman, Martin Dearman.
Art Directors Peter Blackmore, Martin King.
Art Assistants Eugene Francis, Graham Smith.
Technical Artists John Dudley, Lesley Foster, Paul Evans.
Published by Maplin Electronics plc.
Typesetting by Inline Design Systems Ltd., 258a London Road, Hadleigh, Benfleet, Essex SS7 2DE.
Colour Separations by Stirling Graphics Ltd. 16-22 West St., Southend, Essex SS2 6HJ.
Printed by SVP, Caerphilly, Mid Glam. CF8 3SU.
Distributed by Spotlight Magazine Distribution Ltd., 1-11 Benwell Rd, London N7.
Mail Order P.O. Box 3, Rayleigh, Essex SS6 8LR.
Telephone Retail Sales: (0702) 554161. Retail Enquiries: (0702) 552911. **Trade Sales:** (0702) 552961.
Cashtel: (0702) 552941. **General:** (0702) 554155.
Shops: See inside back cover.
Fax: (0702) 553935. **Telex:** 995695.

PROJECTS

10 BOB'S MINI CIRCUITS

Four useful mini projects to build on stripboard.

16 DATA FILE: LM1875

Take a look at the versatile LM1875 audio power amplifier.

40 VIDEO DUBBER & SWITCHING UNIT

Link up several VCR's using this fascinating project.

48 DIGITAL RECORD & PLAYBACK MODULE

Record sounds, including your own voice, and playback at the touch of a button.

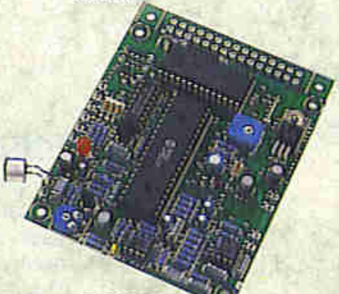

57 4 WAY SPEAKER SWITCH BOX

Have upto 4 speaker systems hooked-up to your Hi-Fi.

64 AUDIO & VIDEO MODULATOR

When using some video equipment a normal TV cannot be directly connected to the video signal, this project solves the problem.

FEATURES

2 CALCS

Numbering systems such as binary, octal and decimal are investigated.

4 SPEAKERS - THE FIRST 111 YEARS

Part 3 leads us from late 50's Stereo to swinging 60's Unit Stereo.

20 ELECTRONICS BY EXPERIMENT

Part 6 delves into the world of the operational amplifier.

24 THE CORDLESS PHONE BOX ARRIVES

Alan Simpson looks at the new CT2 'zonephones' - the next generation of cordless telephones.

26 EXPLORING RADIO

How to build your own FM stereo receiver.

32 EPP-1 EPROM PROGRAMMER

In depth look at the latest ROM blower to hit the market!

35 HELLO WHO'S CALLING?

In this issue we dissect the workings of the famous No. 330 telephone.

72 HOBBYIST IN ACTION!

Philip Walker is an experienced 'home' hobbyist - we asked him to tell us about his achievements!

REGULARS

CALCS

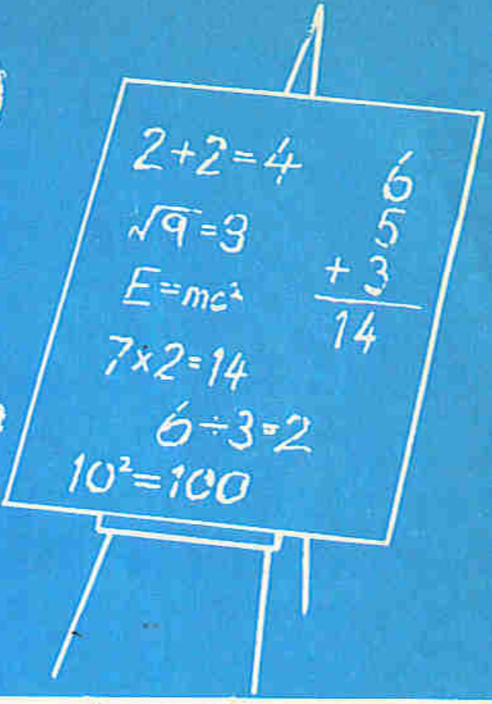

by Jeff Scott Part 3

Number Systems

Number systems are very important because they form the basis of all our arithmetic. In the digital era, number systems become even more important because several different number systems are used in digital electronics.

One of the simplest number systems is the decimal number system, which is to the base ten, i.e. all counting is in lots of ten. This means that even complex numbers can be expressed as fractions or multiples of ten. For instance 359.482 can be expressed as:

$$(3 \times 100) + (5 \times 10) + (9 \times 1) + (4 \times 0.1) + (8 \times 0.01) + (2 \times 0.001)$$

Just as the decimal system is the simplest for ten fingered humans, the binary system is the simplest for engineering two-state digital computers.

Since there are only two-states in a binary system, all counting is to the base two. This has an obvious limitation which is: a large number of digits is required to describe the equivalent decimal value. For instance decimal 7 is described by 111 in binary which uses three bits (binary digits) compared to the one digit that the decimal system uses.

Binary-Decimal and Decimal-Binary Conversion

Decimal to binary conversion is carried out by successive division by 2. For instance to convert decimal 25 to binary:

$$\begin{array}{rcrl} 25 \div 2 &=& 12 & \text{remainder } 1 \\ 12 \div 2 &=& 6 & \text{remainder } 0 \\ 6 \div 2 &=& 3 & \text{remainder } 0 \\ 3 \div 2 &=& 1 & \text{remainder } 1 \\ 1 \div 2 &=& 0 & \text{remainder } 1 \end{array}$$

The answer is given by placing the remainders in reverse order: 11001. Binary to decimal conversion is carried out by assigning weights to each of the digits starting from the right hand side:

etc ... $+2^3 + 2^2 + 2^1 + 2^0$

As an example let us convert 11001 to decimal. This will also act as a check on the above decimal to binary conversion:

$$\begin{array}{rcr} 1 \times 2^0 &=& 1 \\ 0 \times 2^1 &=& 0 \\ 0 \times 2^2 &=& 0 \\ 1 \times 2^3 &=& 8 \\ 1 \times 2^4 &=& \underline{16} \\ && 25 \end{array}$$

Binary Arithmetic

The usual functions of addition, subtraction, multiplication and division can be carried out in decimal provided the rules for binary addition, subtraction and multiplication are obeyed.

The rules for binary addition are:

$$\begin{array}{rcr} 0 + 0 &=& 0 \\ 0 + 1 &=& 1 \\ 1 + 0 &=& 1 \\ 1 + 1 &=& 10 \\ 1 + 1 + 1 &=& 11 \end{array}$$

For instance, add 1011 to 111:

$$\begin{array}{rl} 111 & \text{carry digits} \\ 1011 & \\ \underline{+\ 111} & \\ 10010 & \end{array}$$

The rules for subtraction are:

$$\begin{array}{rcl} 0 - 0 &=& 0 \\ 1 - 0 &=& 1 \\ 1 - 1 &=& 0 \\ 10 - 1 &=& 1 \end{array}$$

For example, subtract 111 from 1101:

$$\begin{array}{rl} 11 & \text{borrow digits} \\ 1101 & \\ \underline{-\ 111} & \\ 110 & \end{array}$$

Checking these in decimal 1101 is 13, 111 is 7 and 110 is 6.

The fundamental arithmetic unit in a digital computer is an adder, therefore the above subtraction process is inconvenient. Some means must be found of adding in order to arrive at a subtraction. This is achieved by adding the complement of the number. The complement may be visualised as a mirror image. The ten's complement of, say, 2 is the difference between 10 and 2, i.e. 8. In binary, the one's complement is obtained by inverting the digits. For example, the one's complement of 1101 is 0010 and the two's complement is obtained by adding 1 to the inversion. So 0010 becomes 0011. Now to subtract 1101 from 1111, the two's complement of 1101 is added to 1111 and the last carry digit is ignored:

$$\begin{array}{rl} 1111 & \text{carry digits} \\ 1111 & \\ \underline{+\ 0011} & \\ 0010 & \end{array}$$

As a quick check in decimal, 1111 is 15, 1101 is 13 and the answer 0010 is 2. The complement method works in decimal equally well. For example, subtract 2 from 4. The tens complement of 2 is 8 so add 8 to 4 giving 12 and ignoring the carry digit leaves 2 (which is $4 - 2$).

Division can be achieved by successive subtraction just as multiplication can be achieved by successive addition. The rules of multiplication are straightforward and follow the normal arithmetic rules:

$$\begin{array}{rcl} 0 \times 1 &=& 0 \\ 1 \times 0 &=& 0 \\ 1 \times 1 &=& 1 \end{array}$$

For instance, multiply 11.01 by 110:

$$\begin{array}{r} 11.01 \\ \underline{\times\ \ 110} \\ 0000 \\ 1101 \\ \underline{1101} \\ 10011.10 \end{array}$$

Other Number Systems

Other number systems are binary coded decimal (BCD), hexadecimal, octal and Gray codes. Some are fundamentally different, like hexadecimal which is to the base 16. Others, like binary coded decimal and octal, are just a variation on the basic binary ideas. Still others, like the Gray code, are not truly fundamental but nevertheless provide an extremely useful counting method.

The basic binary code we have examined so far is the 8421 code shown in Figure 1. Each column has its own weight, or value, as shown and therefore each horizontal row

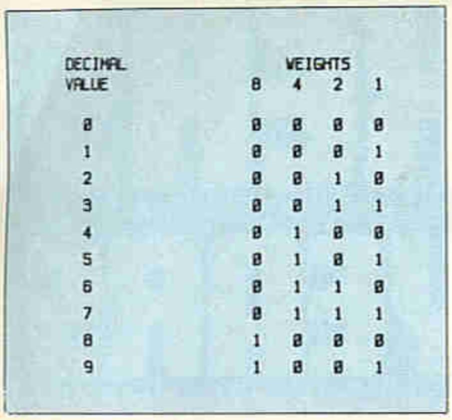

DECIMAL VALUE	WEIGHTS 8	4	2	1
0	0	0	0	0
1	0	0	0	1
2	0	0	1	0
3	0	0	1	1
4	0	1	0	0
5	0	1	0	1
6	0	1	1	0
7	0	1	1	1
8	1	0	0	0
9	1	0	0	1

Figure 1. 8421 binary code.

adds up to the desired decimal value.

Other BCD codes are also used but when the weights are not specified, the 8421 code is assumed. Figure 2 shows the 7421, 5421 and 2421 codes and the columns to be weighted in order to arrive at each decimal value.

Returning to the most common form of BCD, the 8421 code, it can be seen from Figure 1 that it is possible to count only up to decimal 9 using four bits. This is not as efficient as binary which permits us to count to 15 using four bits.

In order to write the BCD (8421) code for decimal numbers greater than 9, the BCD code for each decimal number is written separately. For instance 358 would be represented by:

0011 for 3
0101 for 5
1000 for 8

The answer is written as 0011 0101 1000.

Similarly, faced with a string of binary digits in 8421 BCD, we would proceed to decode these by grouping the bits in lots of four starting from the right, for instance to decode 100101010011, we group these in fours 1001, 0101, 0011.

1001 is 9
0101 is 5
0011 is 3

The answer is 953.

The BCD code is used in counters and printers since people find it easy to think in terms of tens, yet a binary interface must be found for the machine.

Octal counts to the base 8 and therefore describes the decimal numbers from 0 to 7. Since counting up to decimal 8 only is required, three bits will suffice, when binary coding, which is a saving on the four bits required for BCD. However, the overall saving will depend on the number to be described. For instance, 7 is described by 111 in binary and 0111 in BCD. This is a saving of one digit using binary coded octal. In order to binary code the octal equivalent of any number, we write the binary digits for each of the octal digits. For instance, to write the binary equivalent of 413_8:

4 is 100
1 is 001
3 is 111

Therefore, 413_8 in binary is 100 001 111.

The reverse, writing the octal equivalent of binary is carried out by marking off the digits in threes from the right. For example, to write the octal equivalent of 10101110 and marking off groups of threes: 10, 101, 110

110 is 6
101 is 5
10 is 2

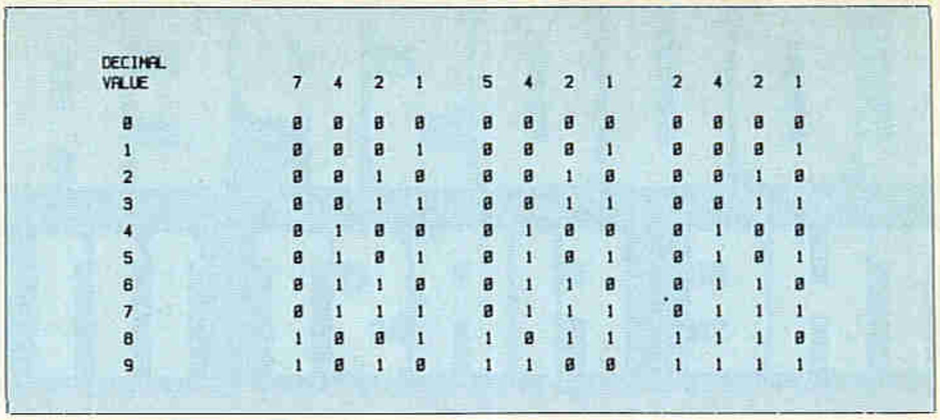

DECIMAL VALUE	7	4	2	1	5	4	2	1	2	4	2	1
0	0	0	0	0	0	0	0	0	0	0	0	0
1	0	0	0	1	0	0	0	1	0	0	0	1
2	0	0	1	0	0	0	1	0	0	0	1	0
3	0	0	1	1	0	0	1	1	0	0	1	1
4	0	1	0	0	0	1	0	0	0	1	0	0
5	0	1	0	1	0	1	0	1	0	1	0	1
6	0	1	1	0	0	1	1	0	0	1	1	0
7	0	1	1	1	0	1	1	1	0	1	1	1
8	1	0	0	1	1	0	1	1	1	1	1	0
9	1	0	1	0	1	1	0	0	1	1	1	1

Figure 2. 7421, 5421 and 2421 codes.

The octal equivalent is 256.

The hexadecimal system is to the base 16. That is, all counting is up to decimal 15, see Figure 3, since 0 counts as one state in the digital world. Then counting to higher states continues as combinations of F (15) and lower digits just as it continues with 10 and lower digits in the decimal system.

Representing large numbers in hexadecimal results in a neat shorthand notation. For instance to convert 111111101101 into hexadecimal we group the digits in blocks of four starting from the right:

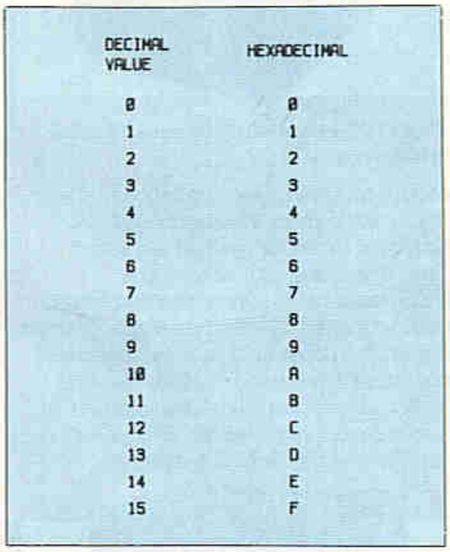

DECIMAL VALUE	HEXADECIMAL
0	0
1	1
2	2
3	3
4	4
5	5
6	6
7	7
8	8
9	9
10	A
11	B
12	C
13	D
14	E
15	F

Figure 3. Hexadecimal code.

1111, 1110, 1101

From Figure 3:
1111 is F
1110 is E
1101 is D

The hexadecimal equivalent is FED.

The hexadecimal number system can provide a further saving in digits compared to the octal system. For instance, the binary digits 10001111 represent 8F in hexadecimal and 217 in octal, a saving of one digit in hexadecimal over the octal system.

Both number systems enjoy a big saving over the binary equivalent which uses 8 binary digits. The IBM 360 computer uses the hexadecimal system and so do various communications terminals where the display panel is required to occupy as little space as possible.

The Gray code is a binary counting system where only one bit changes in stepping to a higher or lower number, see Figure 4. Changing only one bit at a time, like this, means less chance of an error if this counting system is employed in industrial processes for moving tools automatically. Both mechanically operated devices as well as optically scanned devices are used. These devices will not be described here since we are only interested in the mathematics. Another useful area of application is for digital to analogue conversion, as in shaft encoders where the required code is impressed onto a mechanically rotated shaft.

Summary and Conclusions

Number systems have been invented to satisfy particular needs. The decimal system to the base 10 is easy for human beings, the binary system to the base 2 is the best for designing 2 state digital computers, the hexadecimal system to the base 16, offers an abbreviated display and the Gray code offers a binary count where only one digit changes in counting up or down.

By far, the most important for electronic applications is the binary system and therefore the basic arithmetic operations were examined in some detail.

In order to simplify the hardware design of computers, the engineering aspect has made a demand on mathematics to perform all four basic arithmetic operations by means of addition alone.

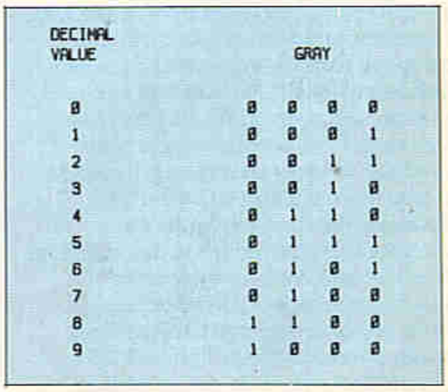

DECIMAL VALUE	GRAY			
0	0	0	0	0
1	0	0	0	1
2	0	0	1	1
3	0	0	1	0
4	0	1	1	0
5	0	1	1	1
6	0	1	0	1
7	0	1	0	0
8	1	1	0	0
9	1	0	0	0

Figure 4. Gray code.

There are many such instances where an engineering problem requires a mathematician to provide a solution. Alternatively, mathematical solutions exist but it can be several decades before the technology is devised to implement it.

LOUDSPEAKERS THE FIRST 111 YEARS

Part 3

by J.M. Woodgate B.Sc.(Eng.), C.Eng., M.I.E.E., M.A.E.S., M. Inst. S.C.E.

From Stereo to Unit Stereo

The coming of stereo, first on reel-to-reel tape in 1956 and, even more significantly, on LP's in 1958, prompted a surge of interest in sound reproduction and, in particular, in loudspeakers. Many home-constructors chose to renew their loudspeakers at this time; many were forced to because they had no room for a second enclosure of the same size as their original. Nevertheless, very large enclosures, such as the Goodmans '315', which incorporated a 30cm bass unit (Audiom 60), a mid-range horn (Midax) covering the range 750Hz to 5kHz, and a horn tweeter (Trebax), were still being successfully marketed to people who had no faith in the new development. The enclosure was 940mm high, 600mm wide and 521mm deep. Smallish cone tweeters (less than 125mm diameter) were becoming more common, and Wharfedale introduced a range of drivers with 'foamed plastic suspension'. Actually, the suspension was still the traditional impregnated linen; it was the surround that was made of the new material. Plastic diaphragms began to appear in direct-radiator tweeters. One of the first was the LPH65, made by Standard Elektrik Lorenz in Germany, and was chosen to launch that company's products on the British market. While better than some other tweeters of the time, the LPH65 suffered from rather wide variations between samples. The same company also offered a 30cm bass unit with two of the LPH65 tweeters mounted on a bar across the front. The bar was bent so as to direct the tweeter axes outwards at about 60 degrees, intended to give more uniform h.f. coverage. However, the tweeters formed a considerable obstruction to the radiation from the bass cone, and upset the mid-range smoothness rather badly. Their presence did make the product exempt from Purchase Tax at 66 2/3%, though! Some work on electrostatic loudspeakers was reported by H. J. Leak's engineering team, but no product seems to have reached the market. Goodmans, too, demonstrated a full-range electrostatic loudspeaker at the 1957 National Radio Show at Earls Court, but it appears not to have proved a commercial success. The following year, A. E. Falkus (from Plessey) and D. A. Newbold (from Richard Allan) set up Fane Acoustics, to manufacture loudspeakers for setmakers and sound reinforcement. The first products, 300mm drivers for household or reinforcement use, were advertised in 1959. One unit had an aluminium voice-coil winding, a favourite technique of Mr. Falkus for obtaining extended h.f. response.

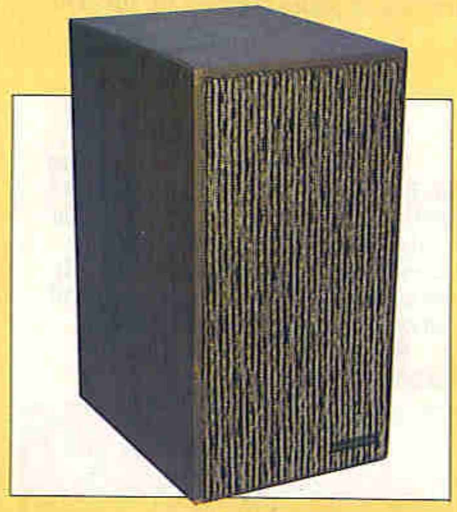

Photo 1. The original Goodmans 'Maxim' loudspeaker.

Photo 2. The 'Maxim' with the grille removed, to show the 100mm bass driver and the 70mm tweeter. The front panel of the enclosure is a steel plate.

German Developments

Even in those days, the German industry spent much more than the British on exhibiting their products. The 1957 Funkausstellung, held at the 35 hectare (I always wanted to get that unit into a technical article!) Frankfurt exhibition ground, featured over 200 exhibitors in seven halls, centred on an 8000 seat concert hall used as a television studio for special exhibition programmes. The favoured sound quality was 'lushness', rather than accuracy, and this view persists in Germany (and some other countries) to this day. Graetz showed a television set with a horn-loaded tweeter, and a mid-range unit consisting of a pressure driver feeding two tubes with perforations along their length. If the tubes were straight, this would produce two very directional sources (the inverse of the gun microphone principle), but the tubes were actually bent at right angles about a third of the way along. This would have produced a complex directional pattern, which was the intention. The notion that omnidirectional loudspeakers have some special merit persists in Germany, despite all the evidence to the contrary. In the late 1950's, however, it was also current in Britain, being supported by no less authorities than Dr. G. F. Dutton and Gilbert Briggs. Many of the latter's designs, however, were not omnidirectional, and it may be that, in striving for a uniform directional response but having to accept something less, that 'something less' was, in fact, quite close to the real optimum. (Hugh Brittain was much closer to the truth in his 1956 article, with D. M. Leakey, in 'Wireless World'.) A small company, Podszus, showed at Frankfurt, a loudspeaker having a composite diaphragm, under the brand 'Zellaton'. This conical diaphragm had a metal front layer, a centre section of foamed plastic and a rear layer of bakelised varnish. Tone-burst tests demonstrated its freedom from delayed resonances. This product seems to have slightly pre-dated D. A. Barlow's work on the 'Leak Sandwich' loudspeaker (first published at the end of 1958).

Meanwhile......

On the theoretical side, James Moir (then Technical Director of Goodmans) published his book 'High Quality Sound Reproduction', which is still used as a reference today, and leaked more than one of its topics in 'Wireless World'. He reported experiments that led to the conclusion that phase-shift which varies with frequency is not generally audible on programme signals unless the phase shift is very large indeed, of the order of 2500 degrees at 100Hz, and 25,000 degrees at 8kHz. This surprising result prompted others to carry out further experiments and theoretical analyses, with very significant consequences, as we shall see later. The same author also tackled the problem of explaining the effects produced when loudspeakers are connected in parallel and placed close together ('Wireless World', October 1957). Curiously, no mention was made of series connection: it would have been a golden opportunity for Jimmy to lay the ghost that series connection destroys the damping factor! A further article touched on the very complex subject of the sound field in ordinary listening rooms, which also helped to prompt other research in the coming years. In late 1958, D. E. L. Shorter, of BBC Research Department, published what was alleged to be a review paper on high-quality loudspeaker design, but which actually included a number of very advanced concepts, including non-minimum phase behaviour and the action of the listening-room. Some of the 'carrots' dangled in this paper have still not been caught up by later researchers.

The Stereo Disc Launch Fiasco

The recording industry has always been a strange beast, full of intrigue, mystique and plain stupidity. It hasn't improved, of course, since 1958, as witness the 'Copycode' scandal and the running battle over DAT. In 1958, the master stroke was to launch stereo discs, after much conflab between the recording companies, without giving the equipment manufacturers anything like enough notice. The result was that new equipment due to be launched towards the end of 1958 had to be hurriedly re-designed for stereo. It was clear that smaller loudspeakers were needed. Goodmans responded with two products, one of which was an omnidirectional unit called 'Stereophonic Bowl', which housed a 150mm driver in a part-spherical metal enclosure, firing upwards to a mushroom-shaped reflector. Intended for use above 300Hz, with what we would now call a sub-woofer, it did not sound all that good, by comparison with other products from the same manufacturer: partly because it was quite accurately omnidirectional and thus did not give a good stereo image, and partly because the high-frequency response and distortion were not inspiring. The other product was the IB3, an extremely heavy, 3-way 'bookshelf' system, with dimensions 61cm x 36cm x 31cm. This included a 300mm bass driver with a 10kg magnet (yes, 10 kilogram, not 10 kilogauss!), together with the Midax and Trebax horns. The interesting thing about this product was that it was an acoustic-suspension system; the free-air resonance of the bass driver was about 18Hz, and this was raised to about 50Hz by the stiffness of the air in the sealed enclosure. The huge magnet was needed to bring the sensitivity of the bass unit, with its very heavy cone, up to something comparable with those of the two horn-loaded drivers. Only Goodmans would have had the courage to offer such a design, but they did have previous experience, having produced one of the very first such systems, with a 23cm driver in a 46cm cubical enclosure in 1939! This driver, the hand-assembled Axiom 80, continued in production into the 1960's, and featured a free-edge bass cone, centralised by means of two sets of three double-cantilever springs, and a whizzer. The resonance was at 20Hz, but the power input was limited to '6 watts'. Other manufacturers adopted a less adventurous approach; to obtain the necessary volume while taking up less floor space, they introduced tall columnar enclosures, some with upward-facing drivers. The Wharfedale 'Column Eight' used a 200mm driver facing a 100mm diameter diffuser, thereby eliminating much of the high-frequency roughness produced by standing waves between the diffuser and cone. The enclosure included reflex ports and a resistive membrane to damp pipe resonances in the column, which was 36cm x 30cm in plan and 112cm tall. Not to be outdone, rivals WB (Stentorian) produced two very similar designs, one for a 150mm driver that was particularly compact. This type of enclosure puts the loudspeaker at about the right height without requiring a separate stand, and its small width improves high-frequency dispersion, especially if narrower than the above example.

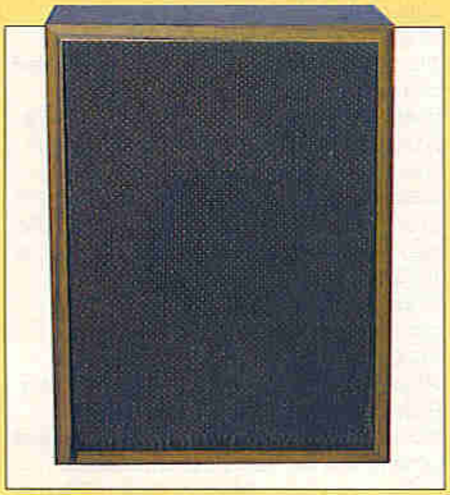

Photo 3. A very basic 'unit stereo' loudspeaker, from the low end of the market. The drive unit is a 125mm type with a fairly small magnet.

There was, in 1959, a revival of interest in coaxial designs, with new units from Wharfedale and Goodmans (the Triaxiom, which had both a 'whizzer' cone and a coaxial horn tweeter), and an improved Tannoy 'Dual-Concentric'. Celestion made a further move in this direction five years later, with the CX series drivers. It will be noted that another revival has occurred nearly thirty years later, with the KEF 'Uni-Q' concept, where at last the tweeter magnet assembly is small enough not to obstruct the radiation from the larger cone.

Foreign Parts

In sound reinforcement, column (line source) loudspeakers were favoured, usually using 165mm drivers as a compromise between l.f. response extension and the need for a separate h.f. line to maintain the directional response in the upper treble. A particularly interesting system was used at the Brussels Universal exhibition in 1958, employing five f.m. radio channels and a separate receiver for each loudspeaker. Some areas of the exhibition were provided with high quality sound from Goodmans Axiom 150 Mark 2, Audiom 80 (both 300mm) and Axiette (200mm) drivers in special enclosures. However, a commentator disclosed a negative reaction to current developments by reporting that 'there was no trace of stridency, which would have come from any attempt at "hi-fi"!' Clearly, high-frequency distortion was at the root of this disenchantment.

In the USA, James Novak, of the Jensen Manufacturing Co., developed and published in late 1958 a theoretical analysis of sealed and reflex enclosures which was partly responsible for prompting Neville Thiele to produce his more complete treatment of the reflex enclosure three years later. Another US development was the construction, in 1960, of a very large array of loudspeakers, comprising 96 bass drivers and 384 tweeters driven by two 7kW amplifiers, for use in aerospace medicine research.

Analogue Computer

Meanwhile, M. V. Callendar, of Ekco (yes, at Southend), was using an analogue computer to design sealed and reflex enclosures in the frequency range 20Hz to 200Hz (but scalable to any decade range). This may not have been very helpful, as practically every component in the electrical analogue circuit was variable, so that finding an optimum solution must have been very difficult. However, Callendar pointed out that the computer would not only demonstrate the frequency response, but also the impulse response. Few can have appreciated the significance of this at the time: it opened up, twelve years later in the hands of Lawrie Fincham and Mike Berman using a digital computer, a whole new level of refinement in the analysis of loudspeaker behaviour. There may well be some mileage left in the use of an analogue, or hybrid, computer in this field now, because the application of Thiele-Small theory would allow many of the variable components to be fixed in value: the effect of variations of others could then be easily determined, more easily than by measuring actual prototypes and more cheaply, in terms of instrumentation, than by using fully digital methods.

The Good Times Pass

By the early 1960's, the first hi-fi revolution was over. Public interest subsided, and few new products were introduced, mostly those which had been developed in the boom years but had not been ready in time. Not all were unsuccessful, however. The Celestion HF1300 direct-radiator pressure tweeter, introduced in 1960 but made previously for use with the GEC metal-cone driver and for special customers, enjoyed a life well into the decade. By contrast, the Leak 'Sandwich' loudspeaker, launched in mid-1961, missed the peak selling period. 1962 saw the appearance of a new company, KEF Electronics, in the market, and a trend to very shallow enclosures, requiring heroic efforts to overcome their inherent problems, such as strong reflections from the rear panel upsetting the mid-range response. Not only KEF and Wharfedale, but Goodmans, too, with their 'Eleganzia' followed this trend. All three manufacturers used foamed plastics as a diaphragm component, KEF and Wharfedale using polystyrene in spite of its poor bandwidth (in the grades available then, there was an internal resonance at about 750Hz). Goodmans claimed to use a quite different material, but the 'Eleganzia' did not find favour for accuracy of reproduction. The year of 1963 saw almost no new product announcements and the interest in loudspeakers seemed to have reached a very low point. The old-established manufacturers were sticking with their product ranges that had been going for many years, and it seemed as though the market was in for a period of stagnation.

The First (successful) Very Small System

Into this millpond, Goodmans dropped a little box, only 14cm x 27cm x 19cm, containing a 100mm(!) bass driver and a 70mm cone tweeter with a vacuum-formed pvc chassis. This system, the original 'Maxim', had a claimed frequency response from 45Hz to 20kHz, and was the brainchild of one Lawrence R. Fincham. The performance was such as to excite total incredulity. We are blase now about the sounds from small boxes, but the average 'small' enclosure in 1964 was of the order of 2 cubic feet in volume (e.g. 30 x 30 x 60cm), and you could stack twelve Maxims in that space. In spite of the small size and extended l.f. bandwidth (the main resonance was around 80Hz), the sensitivity was (and is) quite adequate for home use, even within the power input limitation of '8 watts'. The low-frequency design was based on Neville Thiele's 1961 paper, which had been noticed by Goodmans' Australian agents and sent to Wembley, with rather gratifying results. The whole product was produced with a minimum of capital investment: both cones were cut-downs of existing tooled parts, and the vacuum-forming technique used for the tweeter chassis was a way of avoiding the cost of tooling for metal parts. This is not by any means to minimise Lawrie's achievement; in fact, his handling of new materials has remained a feature of many of the designs with which he has been associated, up to the present day. Furthermore, the tweeter was easily adaptable to become a low-cost unit usable in mass-produced radiograms. The author's designs at this time included one with twin loudspeaker systems comprising a 'commercial' version of the Axiom 10 and the 70mm tweeter. There was also a growing market for musical instrument loudspeakers, and Fane were prominent in serving it (see Figure 1). Not only that, the same company launched, in 1965, the 'Ionofane' ion-driven loudspeaker described in Part 2. In the same year, Wharfedale launched the 'Dalesman' and 'Dovedale' systems, of which the latter enjoyed some popularity. Both systems used 30mm and 125mm drivers: the use of a large tweeter tended to minimise the change in directional response in the crossover region. The bass driver had a free-air resonance of 15 to 18Hz, and the enclosure was of the '2 cubic foot' variety, 60 x 35 x 30cm outside dimensions. Later, the much-larger 'Airedale' was added to the range, with 300mm, 200mm and 75mm drivers. The latter pair faced upward ('omnidirectionality', again), and the cabinet included a sand-filled baffle and ceramic tiles for added rigidity. Not to be outdone by Goodmans, Celestion introduced the 'Ditton 10', with a 125mm bass driver and a dome tweeter in a box rather larger than that of the 'Maxim'. The box was lined with bituminous felt and stuffed with bonded acetate fibre, so that panel and volume resonances were well-damped. Celestion have carried this philosophy through to the present day.

Bass from Bradford

A new name appeared in the ranks of designers when A. R. Bailey, working at the Bradford Institute of Technology, began to publish his work, which advocated the use of a lossy transmission line as the best way of 'losing' the unwanted rear radiation of a bass driver. Initially used in Radford products, this theory was later applied to the IMF transmission-line systems, and is now applied in Transducer Developments products. These products feature extended, aperiodic bass response. Actually, Bailey's most well-known contribution was undoubtedly the use of long-fibre wool as an absorbent material: his location in Bradford, home of the heavy woolen industry, made this material more accessible than it was to other workers, who soon adopted it (where affordable) for filling sealed enclosures. It is much better than other materials for realising the 14% increase in 'box compliance' produced by isothermal, as opposed to adiabatic, compression conditions in the box. Meanwhile, Goodmans finally dropped the 'Eleganzia' after a 'Mark II' model, in favour of a new design, 'Mezzo', the 'Maxim' and what sounds like a breakfast food, the 'Magnum-K'. Neither of the larger systems was as successful as the 'Maxim'. The 'Mezzo' used a 200mm bass unit, and probably suffered from the

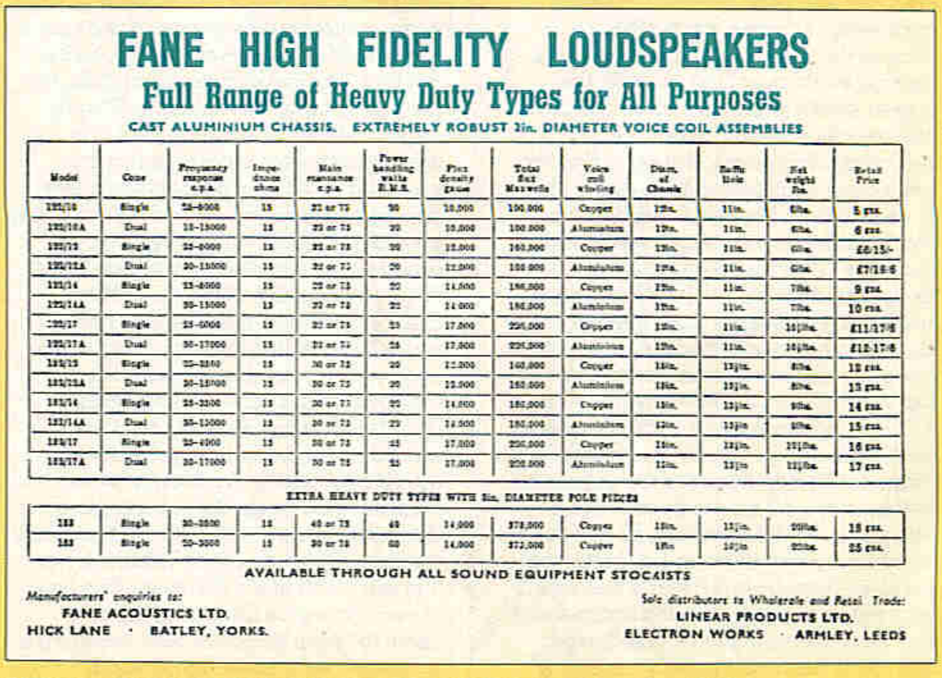

FANE HIGH FIDELITY LOUDSPEAKERS

Full Range of Heavy Duty Types for All Purposes

CAST ALUMINIUM CHASSIS. EXTREMELY ROBUST 2in. DIAMETER VOICE COIL ASSEMBLIES

Model	Cone	Frequency response c.p.s.	Impedance ohms	Main resonance c.p.s.	Power handling watts R.M.S.	Flux density gauss	Total flux Maxwells	Voice coil winding	Diam. of Chassis	Baffle Hole	Net weight lbs.	Retail Price
122/10	Single	25-8000	15	35 or 75	20	10,000	100,000	Copper	12in.	11in.	6lbs.	5 gns.
122/10A	Dual	25-15000	15	35 or 75	20	10,000	100,000	Aluminium	12in.	11in.	6lbs.	6 gns.
122/12	Single	25-8000	15	35 or 75	20	12,000	160,000	Copper	12in.	11in.	6lbs.	£6/15/-
122/12A	Dual	30-15000	15	35 or 75	20	12,000	160,000	Aluminium	12in.	11in.	6lbs.	£7/15/6
122/14	Single	25-8000	15	35 or 75	22	14,000	186,000	Copper	12in.	11in.	7lbs.	9 gns.
122/14A	Dual	30-15000	15	35 or 75	22	14,000	186,000	Aluminium	12in.	11in.	7lbs.	10 gns.
122/17	Single	25-6000	15	35 or 75	25	17,000	225,000	Copper	12in.	11in.	10½lbs.	£11/17/6
122/17A	Dual	30-17000	15	35 or 75	25	17,000	225,000	Aluminium	12in.	11in.	10½lbs.	£12/17/6
153/12	Single	25-3500	15	30 or 75	20	12,000	160,000	Copper	15in.	13½in.	8lbs.	12 gns.
153/12A	Dual	30-15000	15	30 or 75	20	12,000	160,000	Aluminium	15in.	13½in.	8lbs.	13 gns.
153/14	Single	25-3500	15	30 or 75	25	14,000	180,000	Copper	15in.	13½in.	9lbs.	14 gns.
153/14A	Dual	35-15000	15	30 or 75	25	14,000	180,000	Aluminium	15in.	13½in.	9lbs.	15 gns.
153/17	Single	25-4000	15	30 or 75	25	17,000	225,000	Copper	15in.	13½in.	11½lbs.	16 gns.
153/17A	Dual	30-17000	15	30 or 75	25	17,000	225,000	Aluminium	15in.	13½in.	11½lbs.	17 gns.

EXTRA HEAVY DUTY TYPES WITH 3in. DIAMETER POLE PIECES

183	Single	30-3500	15	40 or 75	40	14,000	372,000	Copper	18in.	15½in.	20lbs.	18 gns.
183	Single	50-3000	15	30 or 75	60	14,000	372,000	Copper	18in.	16½in.	22lbs.	25 gns.

AVAILABLE THROUGH ALL SOUND EQUIPMENT STOCKISTS

Manufacturers' enquiries to:
FANE ACOUSTICS LTD
HICK LANE · BATLEY, YORKS.

Sole distributors to Wholesale and Retail Trade:
LINEAR PRODUCTS LTD.
ELECTRON WORKS · ARMLEY, LEEDS

Figure 1. Advertisement showing a range of Fane loudspeakers from 1964.

Photo 4. Back view of the basic 'unit stereo' loudspeaker, showing the perforated back; the perforations are an attempt to stop the back 'drumming', but are ineffective if the box is hung on a wall.

shallow cabinet, only 200mm deep. The 'Magnum' used a 300mm bass unit, with direct-radiators for mid-range and tweeter. The crossover frequencies were 1.5kHz and 6kHz, the first being in a very unfavourable frequency range. The problems of crossover design that may have compromised this design and many others at the time, were not even partially solved until 20 years later. In 1966, Wharfedale introduced the 'Dalesman' shallow enclosure, claiming that the problems of mid-range coloration (due to the shallow box) had been solved. They hadn't. WB also climbed on what was rather an elderly bandwagon with the 'LC92', which seems to have made little impact. Jim Rogers was still struggling with shallow boxes in the mid-1970's. An interesting launch at the 1966 Audio Fair was the 'Decca-Kelly' system, including Stan Kelly's ribbon tweeter and acoustic lens, giving very wide (too wide, according to some analyses) h.f. dispersion. Ted Jordan also launched his titanium cone driver, which did not enjoy the success that the enthusiasm and dedication of its designer might have commanded. But one of the most far-reaching events was the introduction, by an obscure company, Technical Ceramics Ltd., of a system called the Sonotone 'Solent'. In fact, the licence to use the American 'Sonotone' name in Britain was held by Plessey, who had a large loudspeaker factory at Havant, mostly making loudspeakers in high volume for radio and television manufacturers. This venture into a new market was to prove unexpectedly successful. At this time, competition to supply the setmaker market was very fierce, with Celestion, Elac, Fane, Goodmans and Plessey all fighting for each order. It was possible to obtain from each supplier a vast selection of different cones (giving different responses, sensitivities and levels of distortion), permutated with one or more ranges of magnet systems with different sensitivities and, most significantly, prices. The magnet system also affects the l.f. response and maximum permissible input, of course. Making a choice for each new product was a very time-consuming activity, but very rewarding when comparing the final choice with one of the early rejects. Designers of radios and television sets who accepted the first offering sometimes condemned their customers to some very rough sounds. Indeed, BBC engineers made some very forcible representations on this subject to a BREMA (British Radio Equipment Manufacturers Association) representative at a meeting in early 1967. The broadcasters were receiving complaints of poor sound quality which were, in fact, due to inadequate amplifier and loudspeaker performance in the receivers. Some commercial driver designs proved very acceptable: notable among these was a 150mm x 100mm unit, originally developed by Celestion for Roberts Radio. It was used extensively also by Rank-Bush Murphy in portable radios, and by the author as a mid-range unit in top-end unit stereo systems (ITT-KB KS654 and KS660, the latter designed in conjunction with Gary Nest).

The Coming of 'Unit Stereo'

The rising living standards of the mid-60's and developments in transistors led to the public taste moving away from the traditional radiogram to something nearer 'hi-fi', but less complicated. Ferguson probably started the trend with the 'Stereomaster' products, self-contained stereo record reproducers with the accent on sound quality. Later versions included radio receivers, coming back towards the 'radiogram' concept, but much more compact, and these were superseded by disc-player-amplifier and player-receiver combinations, (ultimately leading to the 'music-centre', incorporating a cassette recorder as well, which pervaded the mass market in the 1970's). At the same time, the 'traditional' high-fidelity manufacturers begain to simplify buying decisions by offering complete systems, as well as separate items of equipment, but not with great success. At the 1967 Audio Fair, KEF introduced, in their 'Carlton' 3-way system, a wide-band mid-range dome driver (250Hz to 4kHz) with lossy-line termination at the back of the dome. This was in the form of a congulated flexible pipe, nearly 1m long, partly filled with long-fibre wool. Philips and Ferguson showed unit audio products, while Celestion launched the 'Ditton 15', a compact 3-way system incorporating a 200mm bass unit and the HF1300 tweeter together with a 'drone-cone' or 'Auxiliary Bass Radiator', which exempted the product from Purchase Tax quite apart from anything it did to the l.f. bandwidth. This was Lawrie Fincham's first product for his new company, and became nearly as popular as the 'Maxim' had been. Wharfedale featured their 'Linton' system, first announced in late 1966. This was a 2-way system with a 200mm bass unit and a 75mm tweeter, and became quite popular. Another interesting development, announced in 1967 by the National Physical Laboratory, was the use of holography to analyse the vibration patterns of transducer diaphragms. This was used extensively later by Graham Bank, at Celestion and Wharfedale, and by Bowers and Wilkins, who launched the 'Model 70', with a large electrostatic unit covering the frequency range above 70Hz allied to a cone bass driver, in 1969. Meanwhile, the 'Solent' was building a reputation for itself at the budget end of the hi-fi market. It so happened that the drive units, a 165mm bass unit and an 83mm cone tweeter, could easily be produced in a 'commercial' form at a price which allowed Plessey to supply thousands of units to the 'unit audio' manufacturers, giving them access to a loudspeaker system that was really quite good, for a change. Not all took up the offer, but a new standard was set for 'mass-market' audio products. There was a brief flurry

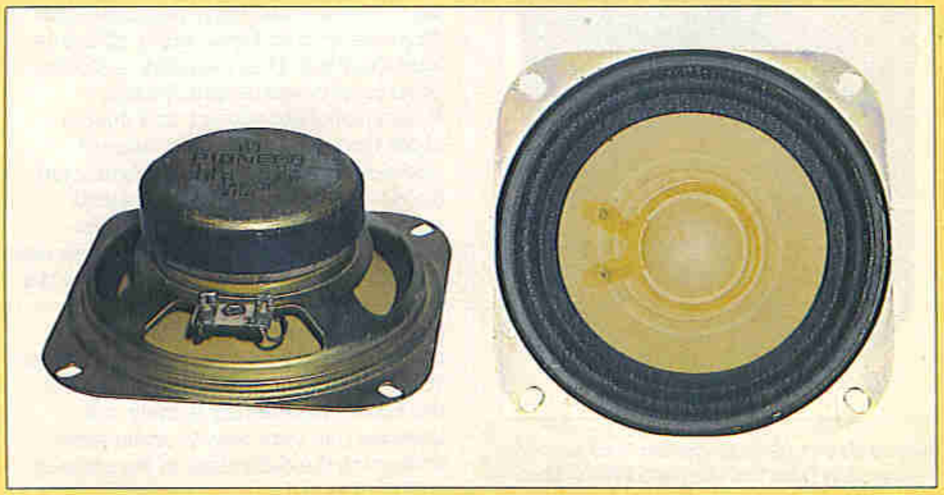

Photo 5. The Pioneer 100mm full-range driver: one of the best small full-range units of the 1960's. Unfortunately, Pioneer stopped making commercial drive-units long before this particular product had been superseded.

of interest in omnidirectional systems again, prompted by a revival in France and the USA, but it lasted only about a year. As the '60s closed, the most interesting developments seemed to be occurring in the mass-market, with many quite good designs being produced for 'unit audio'. At the budget end of this market, a 100mm full-range driver made by Pioneer set a new standard for performance: it allowed the construction of small systems that really sounded excellent in their price-range (and better than many a larger one, too). ITT-KB used this unit in several models, including one which had a part-spherical enclosure that was a very inexpensive p.v.c. blow-moulding (the technique used for making household bleach bottles!). The spherical shape gave great rigidity to the enclosure, like an egg shell, together with freedom from diffraction effects, and the Pioneer driver gave a very pleasant sound quality. The measured performance was not too bad, either!

Research Results (at last!)

Not many research papers were published in the mid-60's, and few had any lasting impact. But in 1967, Richard Heyser produced a paper on Time Delay Spectrometry (TDS). When a loudspeaker is supplied with a complex signal, such as noise or programme, it does not radiate all the energy that it should, simultaneously. Effectively, it 'smears out' the signal energy in time, and some frequencies are radiated later than they should be. Consequently, the spectrum of the output signal is not the same as that of the input signal, and it is possible, by examining how the output spectrum varies with time, to find out which frequencies are abnormally late (or apparently early), and, in many cases, to deduce why this is occurring. TDS is a very powerful measuring method, but, like other very powerful methods, is apt to overwhelm the inexperienced user with masses of data. Unfortunately, this has led to a mystique growing up around the technique, and a powerful cult-following which is intolerant of criticism. The tragic death of Richard Heyser in 1987 has, unfortunately, tended to reinforce this mystical trend. Consequently, we see raw TDS results presented as meaningful in themselves, when a great deal more could be discovered from a proper interpretation of them. The TDS work was followed up in 1969, when Richard Heyser published his theoretical and early practical work on phase-shift and time-delay effects in loudspeakers. These matters had often been considered before, but the difficulties of the subject, and doubts about the subjective significance of phase-response errors, had obstructed the development of both theoretical analysis and practical experiments. Heyser put forward strongly the view that the subject was of vital importance to the understanding of the behaviour of loudspeaker systems, and that the difficulties must be faced and overcome. The papers, published in the Journal of the Audio Engineering Society, are, however, not very easy to understand (reflecting the difficulties of the subject) and this has led to some bizarre misunderstandings of the true requirements for an ideal loudspeaker. A more accessible paper, by Paul Klipsch in the same Journal, re-examined sources of non-linearity in loudspeakers and called attention to the effects of Doppler distortion in the small bass/midrange drivers that were (and are) so widely used.

Photo 6. Prototype high-quality 'unit stereo' loudspeaker from the very late 1960's. This was a reflex design, with an enclosure made from rigid polyurethane 'structural foam'. The crossover network is a true second-order filter.

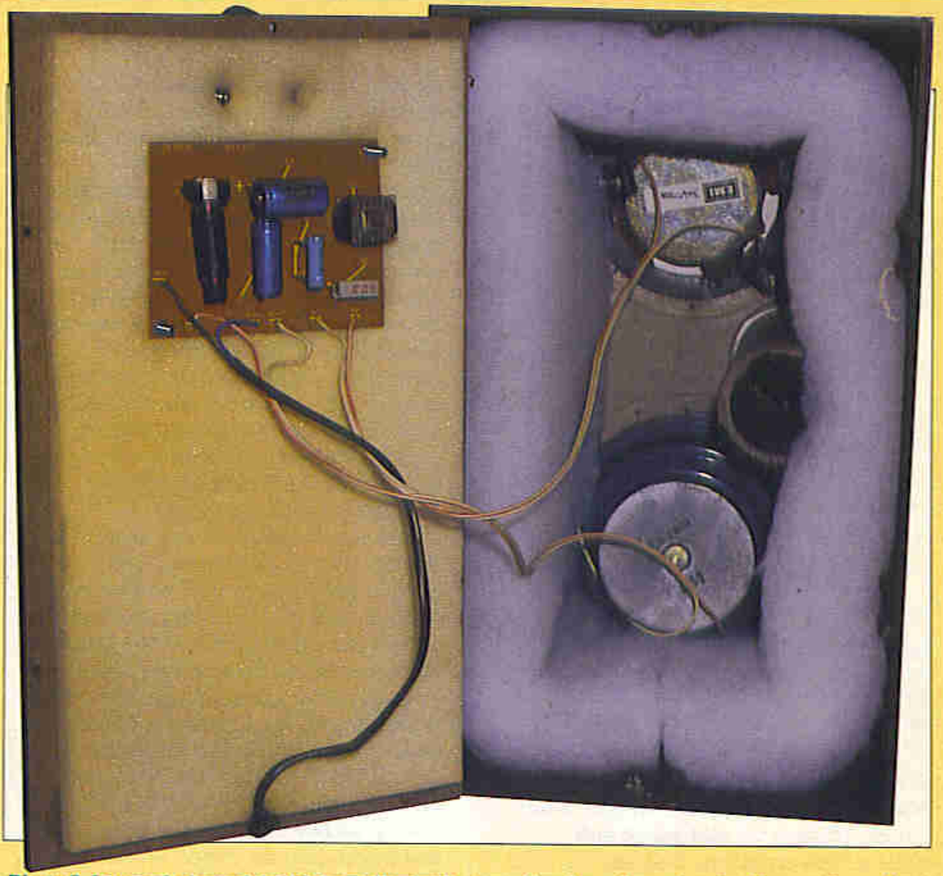

Photo 7. Internal view of the high quality 'unit stereo' loudspeaker, showing the port tunnel, the two drive units and the bonded acetate fibre filling. This system was designed by Gary Nest, but not manufactured in this form.

As the industry entered the 1970's, with rising consumer expenditure culminating in the 'Barber boom' of 1973 and the subsequent market collapse in 1974, the mass-market was doing well with 'Unit Stereo', although competition was fierce. The high-fidelity market was also quite good, with the large-scale invasion of Japanese products still to come, but there was more emphasis on amplifiers and other electronics rather than loudspeakers. Meanwhile, research was producing very significant insights into correct synthetic design methods. Synthetic design is where you begin on paper or with a computer: analytic design is where you build something, measure it and then try to improve it. For synthetic design, you have to know a great deal about how the system works. For analytic design, you don't have to know so much, but it appears less scientific and may be unpredictable. However, a true scientist would call analytic design 'research', and synthetic design 'engineering', and he would not be wrong. Richard Small published a significant paper on crossover networks in 1969, a subject which was to be of major interest for more than ten years to come. The early 1970's saw the republication of Neville Thiele's work on vented boxes, and Richard Small's work both on these and closed-box systems. All these subjects, and more, will be covered in the next part of this series.

Maplin's
20 BEST SELLING BOOKS!

These are our top twenty best selling books based on mail order and shop sales during October and November 1988. Our own magazines and publications are not included. The Maplin order code of each book is shown together with page numbers for our 1989 catalogue. We stock over 250 different titles, covering a wide range of electronics and computing topics.

2

Home Electrics, by Geoffrey Burden. *(RQ22Y) Cat. P75.* Previous Position: 1. **Price £4.95**

3

MIDI Projects, by R.A. Penfold. *(WP49D) Cat. P89.* Previous Position: 4. **Price £2.95**

Number One

Loudspeaker Enclosure Design and Construction

by Fane Acoustics

This book contains a broad selection of cabinet designs from small-sized bass reflex cabinets to multi-way power systems. *(WM82D) Cat. P87.*

Previous Position: 2

Price £3.00

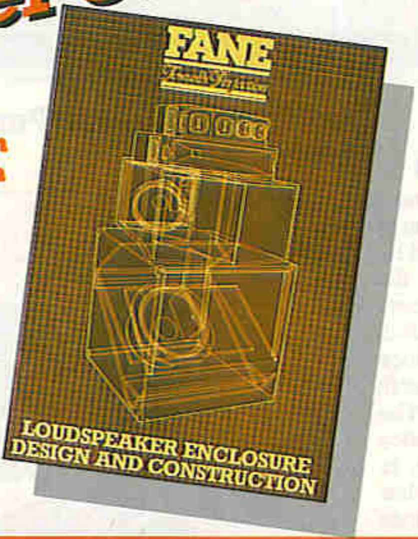

4

Projects for the Car and Garage, by Graham Bishop. *(XW31J) Cat. P65.* Previous Position: 13. **Price £6.95**

5

IC555 Projects, by E.A. Parr. *(LY04E) Cat. P86.* Previous Position: 5. **Price £2.95**

6

Mastering Electronics, by John Watson. *(WM60Q) Cat. P83.* Previous Position: 8. **Price £4.25**

7

Power Supply Projects, by R.A. Penfold. *(XW52G) Cat. P84.* Previous Position: 3. **Price £2.50**

8

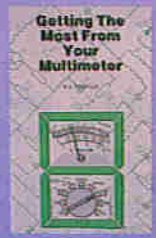

Getting the Most from your Multimeter, by R.A. Penfold. *(WP94C) Cat. P83.* Previous Position: New Entry. **Price £2.95**

9

Electronic Security Devices, by R.A. Penfold. *(RL43W) Cat. P85.* Previous Position: 9. **Price £2.50**

10

Introduction to Electronics, by Pam Beasant. *(WP50E) Cat. P83.* Previous Position: 6. **Price £2.95**

11

How to Use Op-Amps, by E.A. Parr. *(WA29G) Cat. P81.* Previous Position: 11. **Price £2.25**

12

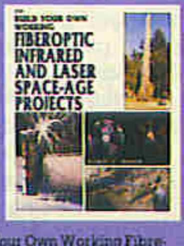

Building Your Own Working Fibre-Optic Infrared and Laser Space-Age Projects, by Robert E. Iannini *(WP77J) Cat. P86.* Previous Position: 14. **Price £12.40**

13

How to Design and Make Your Own PCB's, by R.A. Penfold. *(WK63T) Cat. P82.* Previous Position: 10. **Price £1.95**

14

Electronic Timer Projects, by F.G. Rayer. *(WG72P) Cat. P85.* Previous Position: New Entry. **Price £1.95**

15

Audio Projects, by F.G. Rayer. *(WG46A) Cat. P87.* Previous Position: 15. **Price £1.95**

16

International Transistor Equivalents Guide, by Adrian Michaels. *(WG30H) Cat. P78.* Previous Position: 7. **Price £3.50**

17

Servicing Radio, Hi-Fi and TV Equipment, by Gordon R. King. *(WG89W) Cat. P92.* Previous Position: New Entry. **Price £9.95**

18

Model Railway Projects, by R.A. Penfold. *(WG50Q) Cat. P85.* Previous Position: New Entry. **Price £1.95**

19

Adventures with Micro-Electronics, by Tom Duncan. *(XW63T) Cat. P83.* Previous Position: 19. **Price £1.95**

20

50 Simple LED Circuits Book 2, by R.N. Soar. *(WG43W) Cat. P86.* Previous Position: New Entry. **Price £2.50**

Bob's MINI-CIRCUITS

From Robert Penfold

Accented Metronome

The conventional pendulum type metronome now seems to be something of a dying breed, it has been superseded by electronic devices that generate the regular train of 'click' sounds. Some electronic instruments now have a built-in metronome, and it is quite easy to produce a simple stand-alone unit for use with instruments that lack this facility. The design featured here has a frequency range of approximately 0.5 to 5 Hertz, or about 30 to 300 beats per minute in other words. Some mechanical metronomes have the ability to emphasise every 'nth' beat, usually by ringing a bell on the accentuated beats. This unit has a similar feature, but it produces a low pitched 'thud' sound on the accented beats instead of the usual 'click' sound. Every second, third, or fourth beat can be stressed, or this feature can be switched out altogether if desired. The unit can easily be modified to accentuate anything from every second beat to every ninth beat if required.

A low frequency oscillator generates the procession of 'click' sounds, and this oscillator is a simple 555 astable type based on IC1. RV1 is the frequency (beat rate) control. R2 has been made very low in value so that the output signal from IC1 is a series of very brief pulses. This gives the required high pitched 'click' sound. The loudspeaker is driven from the output via an emitter follower buffer stage (TR2). IC1 provides short negative output pulses, but what we require here is positive pulses. This is nothing to do with the sound produced, which is the required 'clicks' in either case. It is a matter of ensuring that the current to the loudspeaker is switched off most of the time, and that it is only driven during the brief output pulses. This gives a low current consumption, whereas the alternative of having the loudspeaker activated for most of the time would give a massive current consumption. TR1 acts as a simple inverter to provide the output stages with pulses of the correct polarity.

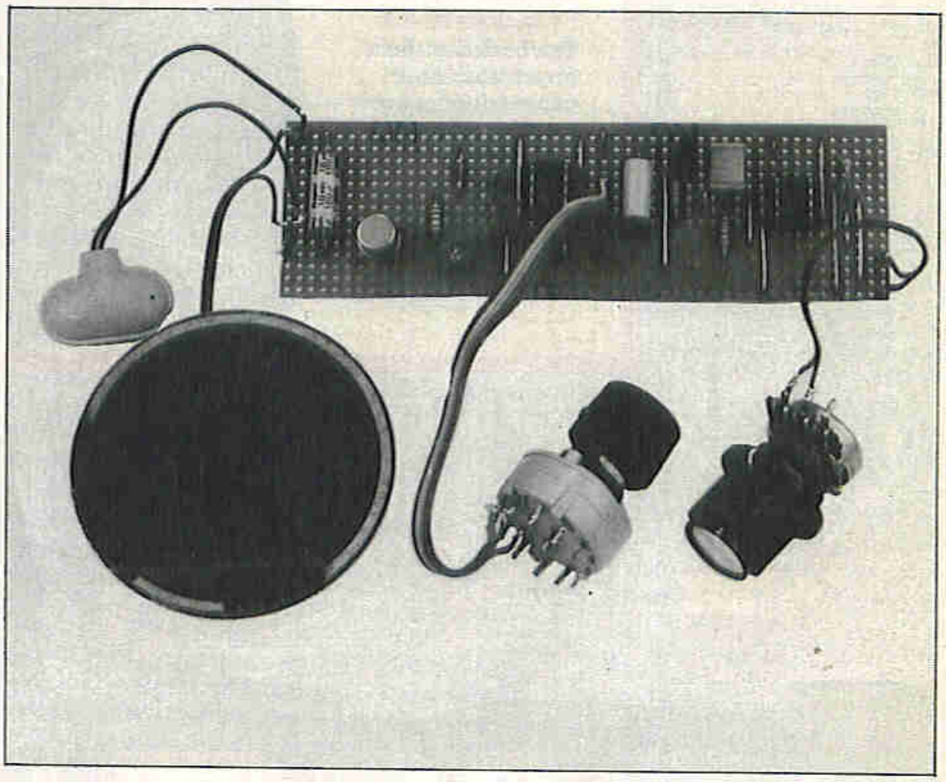
Accented Metronome.

The accentuation is obtained by feeding the output pulses from IC1 to a divide by 'N' circuit. This is based on IC2 which is a decade counter and one-of-ten decoder. It is made to divide by two, three, or four by feeding the appropriate one-of-ten output to the reset input. The required division rate is set using S1. If no accentuation is required, S1 is set to the '0' position. The reset input is then connected to the '0' output, which holds the counter permanently in the reset state. When the accentuation is active the output pulses from output '0' are shaped by C3, D1, and D2 and mixed with the output pulses from IC1. Their longer pulse duration gives them a lower pitch than the ordinary output pulses, and they are also reproduced at a slightly higher volume level which helps to make them stand out still further.

The current consumption of the circuit is about 9 milliamps, which is mainly the current drawn by IC1. A small (PP3 size) battery is adequate as the power source, but if the unit is likely to receive a great deal of use, a higher capacity type would give lower running costs.

Construction of the unit does not provide any major difficulties, but bear in mind that IC2 is a CMOS device, and that it consequently requires the standard anti-static handling precautions to be observed. RV1 should be fitted with a

IC2 Pin Number	Division Rate
4	2
7	3
10	4
1	5
5	6
6	7
9	8
11	9

Table 1. Division rates.

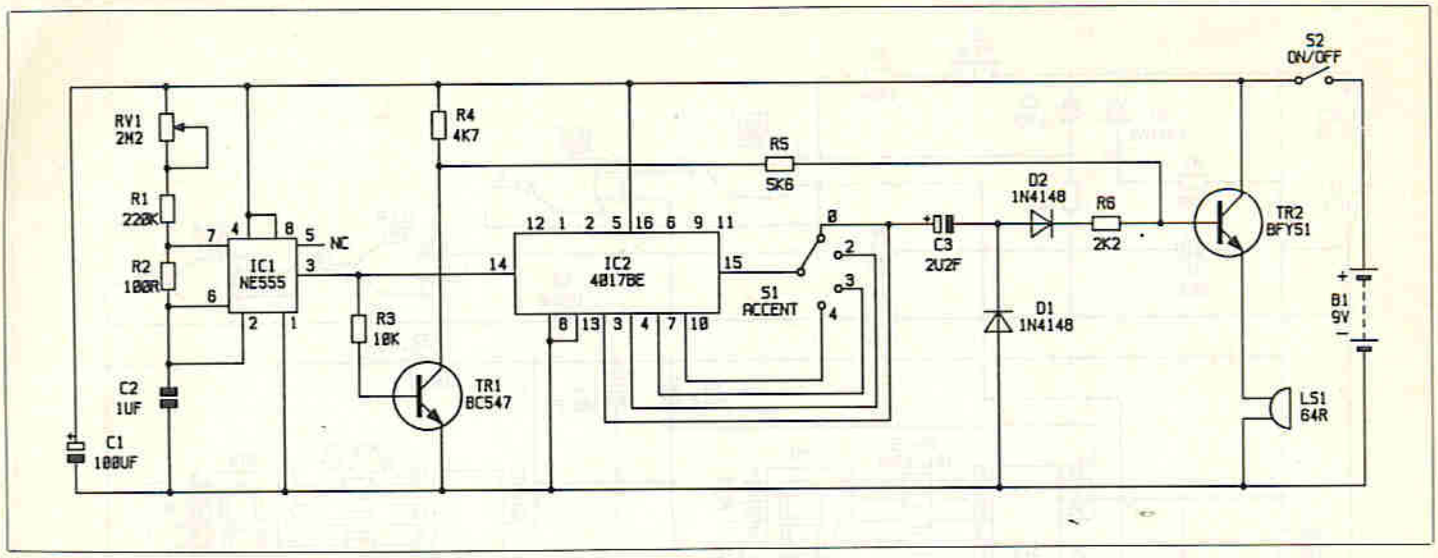

Accented Metronome Circuit.

large control knob so that it can be equipped with a calibrated scale of reasonable accuracy. Finding the calibration points is a matter of counting the number of beats in a given period of time in order to determine the beat rate, plus a certain amount of trial and error in order to get RV1 precisely set to the desired calibration rates.

As pointed out previously, you can obtain accentuation on any beat from every second one to every ninth beat. It is just a matter of using a switch having the required number of ways and using the appropriate outputs of IC2. Table 1 shows which output pins provide which division rates. Whether you consider such rates as seven and nine worthwhile is your own decision!

Reaction Tester

This reaction testing game gives a digital readout of reaction time on an arbitrary scale of 0 to 99. In fact, the readings are approximately in hundredths of a second, but unless you have access to a suitable frequency meter it is not possible to set up the unit for really accurate results. Even without calibration, the unit provides an accurate relative indication of reaction times so that a number of people can see how their reactions rate against one another. The unit will also show how alcohol, fatigue, etc. affect ones reaction times. The influence of such factors on ones reaction time is probably greater than most people would imagine.

The unit is very easy to use. At switch-on the display registers '00', and after a delay of about ten seconds it starts to increment. The contestant must then operate a push-button switch as soon as possible so as to halt the count and display the reaction score. In order to use the unit again, it is just a matter of switching it off momentarily, in order to reset the circuit, so that a new sequence is started from the beginning.

IC2 is a standard 555 astable which acts as the clock generator. If access to a frequency meter capable of accurate results at audio frequencies is available, R7 can be replaced by a 47k preset in series with a 22k fixed resistor. The preset is then adjusted for 100Hz at the output (pin 3), of IC2. The counter circuit is a simple two digit type based on CMOS 4026BE decade counter/seven segment decoders (IC3 and IC4). These drive seven-segment common-cathode displays via current limiting resistors R9 to R22. The circuit is only suitable for use with common-cathode displays (not common-anode types), and for good results reasonably efficient types should be used (any reasonably modern type should be suitable). The pin numbering shown in the circuit is correct for standard 0.5 and 0.56 inch devices, which are probably the best types to use. C5 and R8 provide a reset pulse for the counter at switch-on.

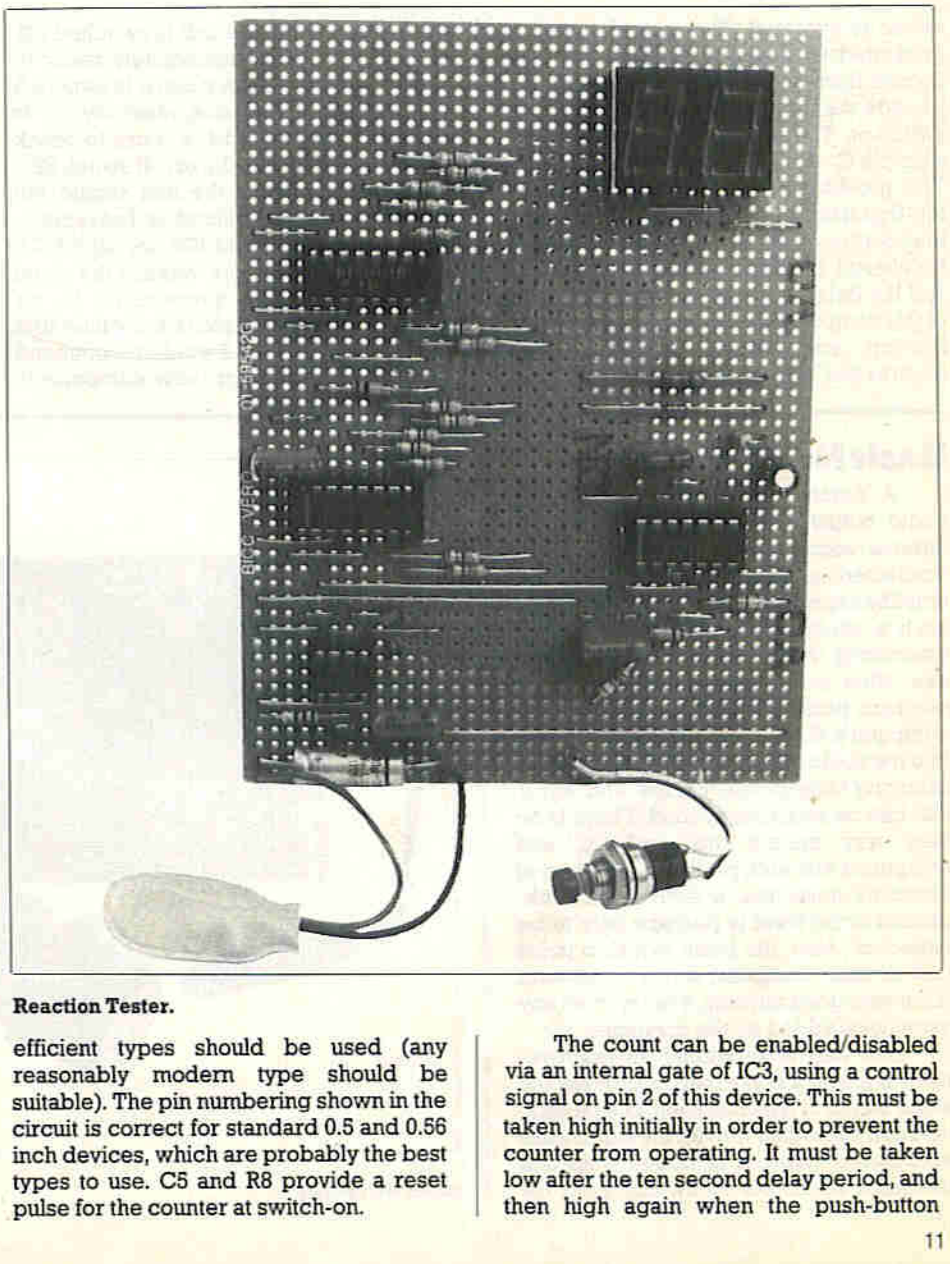

Reaction Tester.

The count can be enabled/disabled via an internal gate of IC3, using a control signal on pin 2 of this device. This must be taken high initially in order to prevent the counter from operating. It must be taken low after the ten second delay period, and then high again when the push-button

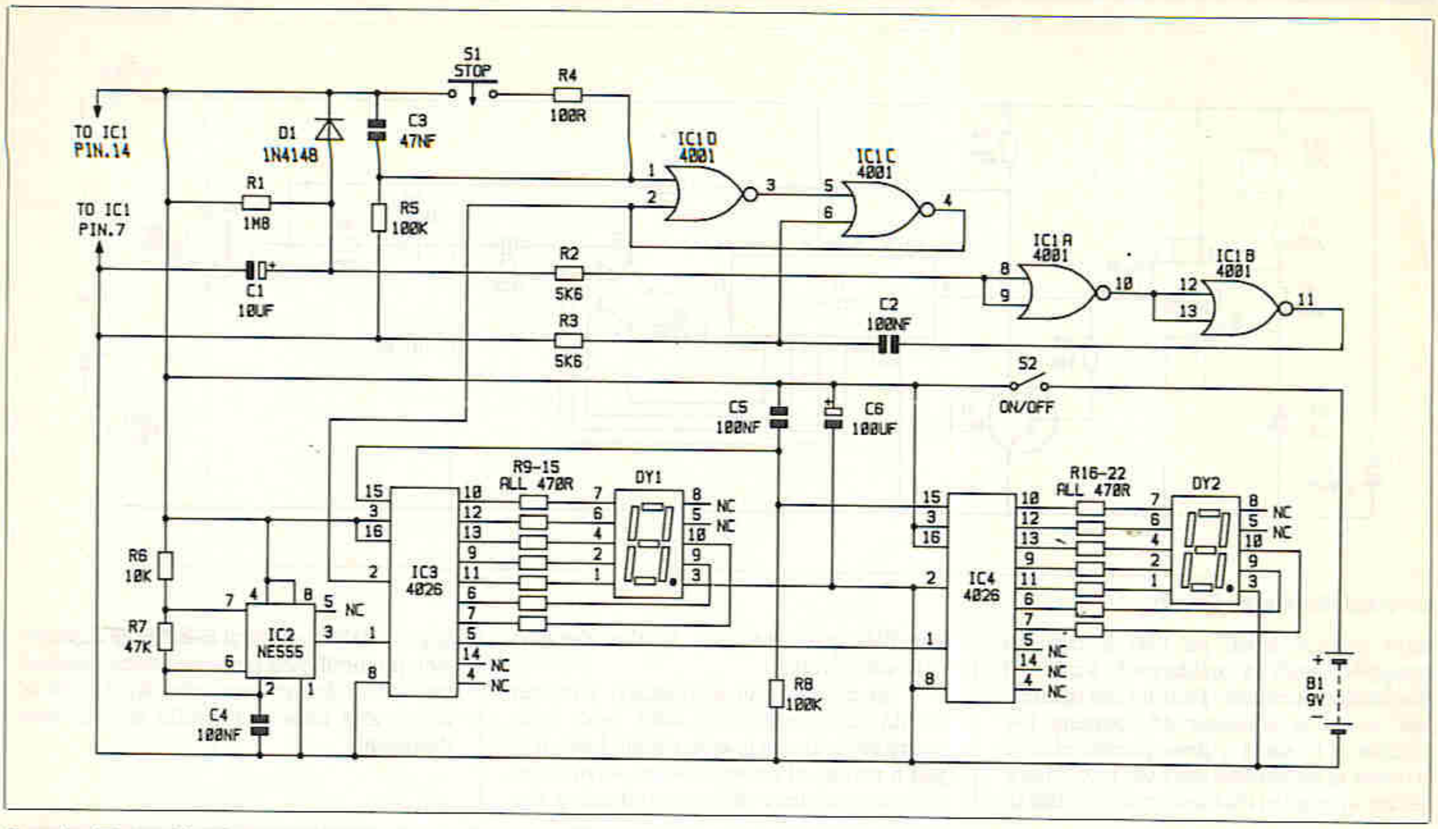

Reaction Tester Circuit.

switch is operated. The control signal is generated by a simple set/reset flip-flop formed from two gates of IC1. C3 and R5 provide the flip-flop with a reset pulse at switch-on. The other two gates of IC1, plus a simple C – R circuit, form a simple timer. This provides a positive set pulse to the flip-flop at the end of the delay period, and the count commences. The delay time can be altered by changing the value of R1, and the delay is proportional to the value of this component. Operating S1 resets the flip-flop and 'freezes' the count. D1 ensures that timing capacitor C1 is largely discharged when the unit is switched off, so that it is almost immediately ready to start a new timing run when it is swtiched on again. If a separate reset switch is required, simply add a push-to-break switch in series with the on/off switch S2.

Construction of the unit should not present any major difficulties, but remember that IC1, IC3, and IC4 are all CMOS devices, and therefore require the usual anti-static handling precautions to be taken. Some LED displays are vulnerable to heat damage, and I would recommend the use of a socket for these components as well. Suitable sockets are not available, but it is not too difficult to cut a 20 pin DIL holder into two 10 pin SIL types. Provided they are given the correct 0.6 inch spacing the displays will then plug into them without any difficulty. The current consumption of the unit is largely dependent on the number of display segments that are switched on, but is in the region of 75 milliamps. This fairly high figure necessitates the use of a high capacity battery such as a PP9 type or six HP7 size cells in a plastic holder.

Basic Noise Gate

A number of computers have an audio output socket that enables their internal sound generator circuits to be connected to a hi-fi system, or other amplifier/speaker combination. Using such a set-up can provide much more convincing 'zaps' and 'pows', but results can often be a little disappointing. A common problem is with noise from the computer's digital circuits finding its way into the audio output signal. This results in annoying background 'buzzes' and 'hums' that can be surprisingly loud. There is no easy way around this problem, and computers are such prolific generators of electrical noise that a fairly high background noise level is perhaps only to be expected. Also, the basic signal to noise ratio of many computer sound generators is not very good anyway, even without any extra noise added by the computer.

One way of providing an improvement is to use a noise gate to process the audio output of the computer. The general idea of a noise gate is to let the signal pass unhindered when it is above a certain threshold level, but to switch it off (or

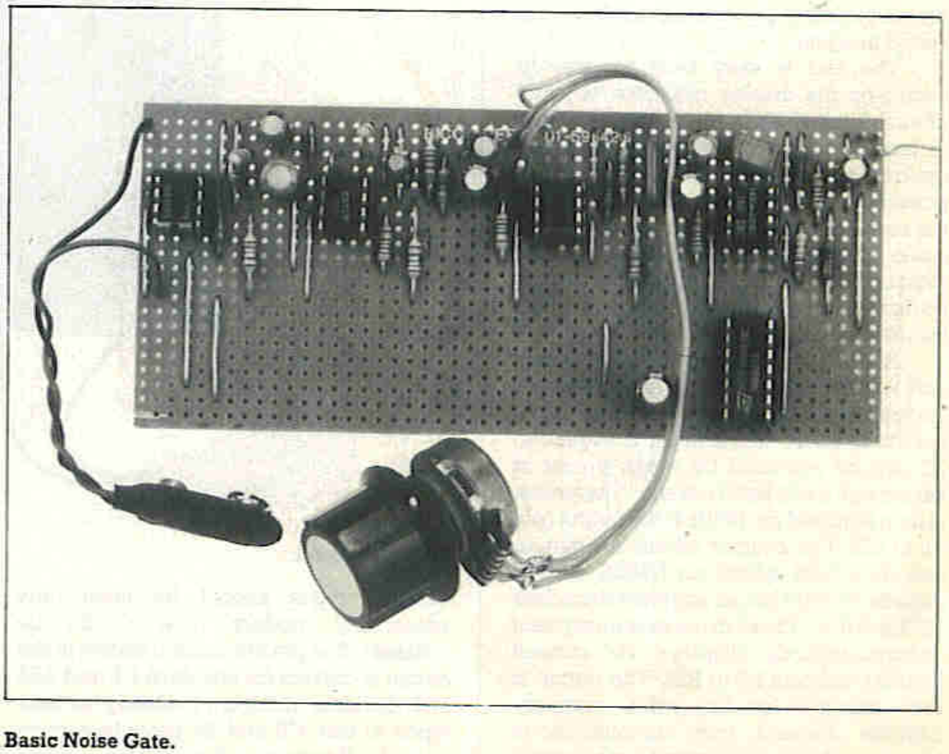

Basic Noise Gate.

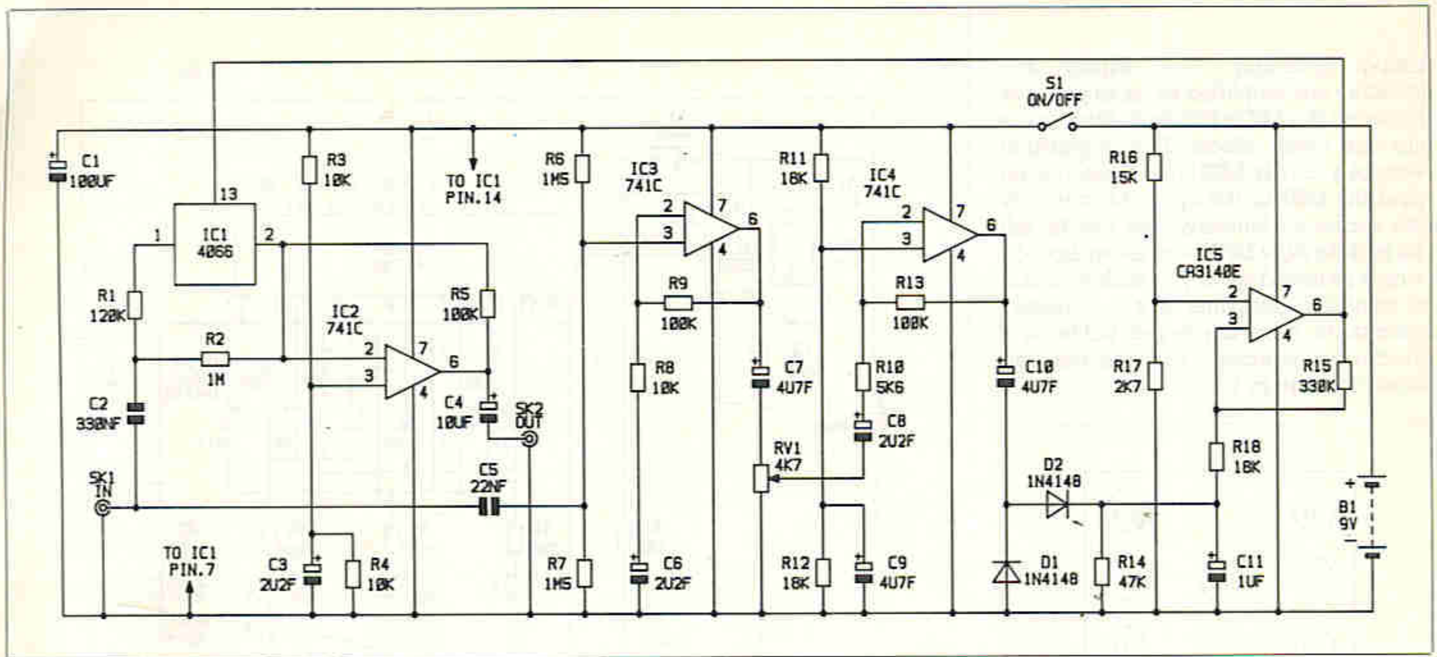

Basic Noise Gate Circuit.

attenuate it) when it falls below a certain level. This system usually works well in a computer context where the 'zaps' and other sound effects are passed by the gate, but the background noise is cut off. Although the sound effects may be foreshortened very slightly by the noise gate, the nature of these sounds is such that this is unlikely to be apparent to the listener. Noise gates can be quite complex and expensive pieces of equipment, but for an application of this type something quite basic will give quite good results. The signals from most computer sound generators are quite simple types that do not merit such things as zero crossing switching.

In this circuit the main signal path is through an inverting mode amplifier based on IC2. R2 and R5 normally give this amplifier a gain of about −20dB, or a reduction in the signal by a factor of about ten in other words. However, by switching on electronic switch IC1 it is possible to shunt R1 across R2, and this boosts the voltage gain of the circuit to about unity. A noise gate action can be obtained by activating IC1 when the input level exceeds a certain threshold level. Note that the circuit does not provide a true gate action in that it does not fully mute the signal when it is in the 'off' state. This is a factor that is common to most noise gates though, and this method generally seems to give better results.

The control signal for IC1 is obtained by first amplifying the input signal using IC3. After the signal has passed through the threshold level control (RV1) it is then further amplified by IC4. The output of IC4 is rectified and smoothed to give a positive DC bias that is roughly proportional to the amplitude of the input signal. The attack time is quite short, but the decay time is controlled by the values of R14 and C11, and is easily changed. The specified values should give good results though. This signal drives a trigger circuit based on IC5. A certain amount of hysteresis is provided by R15, and this helps to avoid repeated switching of the circuit when the input signal is near the threshold level.

The setting of RV1 is not likely to be too critical, and it is just a matter of adjusting it for a low switching threshold, but not one that is so low that the noise is not suppressed reliably. A little experimentation should soon come up with a suitable setting. Signal threshold levels of as little as a few millivolts are possible with RV1 well advanced. The current consumption of the circuit is only about 5 milliamps or so, and a small (PP3 size) 9 volt battery should be adequate as the power source. Note that IC1 and IC5 are both MOS input types, and they consequently require the usual anti-static handling precautions.

Electronic Die

Producing a simple circuit that will provide an electronic simulation of a die is one of those things which seems very easy until you try it. What starts out as a very simple idea can grow by the minute until it develops into what is really a quite complex final design. One of the main problems is that the circuit must count from one to six, whereas most electronic counter circuits are designed to count from zero to nine. Resetting the count early is not generally too difficult, but getting rid of the unwanted zero can be hard. If a display having the conventional spot patterns is required, rather than a seven-segment display, there is the additional problem of providing a suitable decoder for this non-standard form of digital readout.

After trying a number of approaches this circuit was finally devised. It is based on two inexpensive integrated circuits plus eleven diodes which provide the

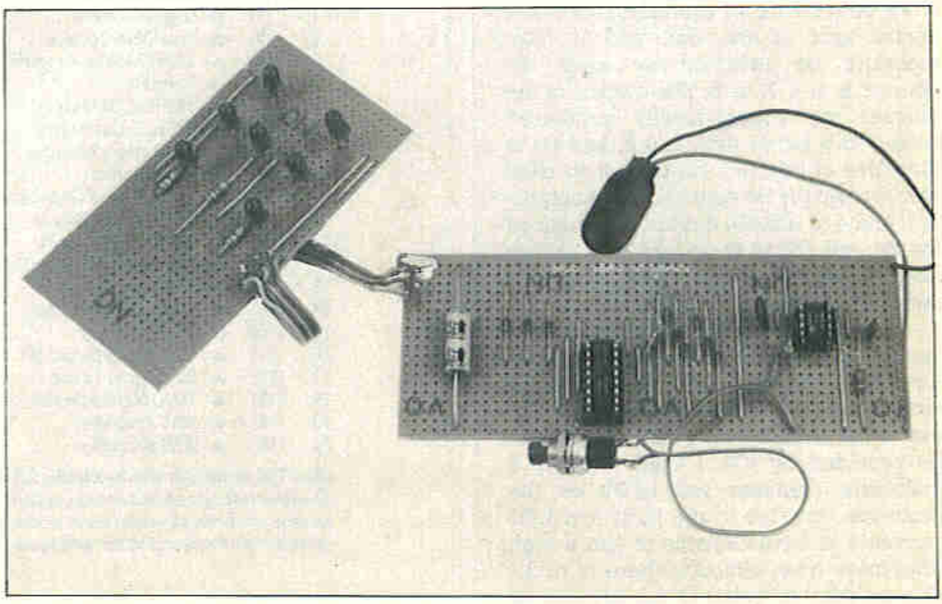

Electronic Die.

display decoding. The display and decoding are simplified as far as possible by having the LED's driven in three pairs plus one single diode. This is possible because a 'corner' LED is only switched on when the LED in the opposite corner is also activated. Similarly, the middle-left and middle-right LED's are either both on or both switched off. If you wish to obtain the standard spot patterns, it is obviously essential to have the seven LED's in a suitable arrangement, such as the one shown in Diagram 1.

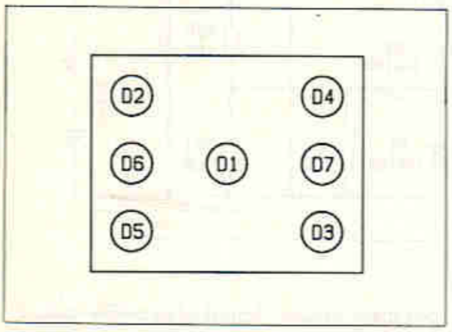

Diagram 1. LED pattern.

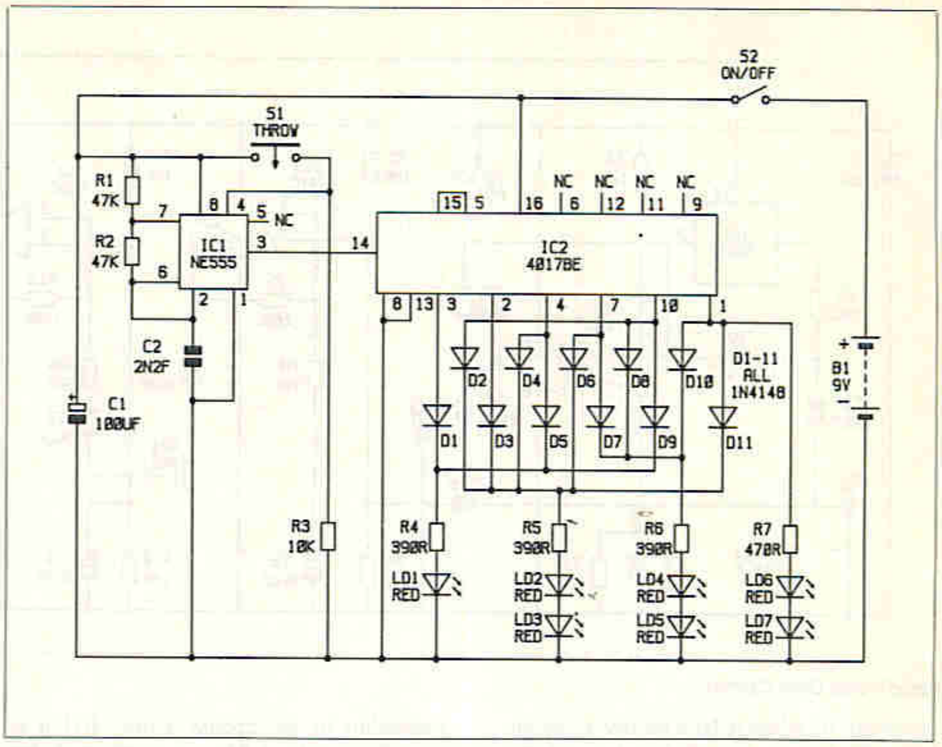

Electronic Die Circuit.

IC1 is the clock oscillator, and this is a standard 555 astable operating at a frequency of a few kilohertz. However, it only oeprates whilst push-button switch S1 is operated. In practice S1 is pressed for a second or two and then released in order to 'throw' the die. The high clock frequency ernsures that there is no way of predicting or controlling the number produced by the counter when the count is 'frozen', and the number 'thrown' is therefore a pseudo-random one.

The counter is a CMOS 4017BE one-of-ten decoder (IC2). In this case, output 6 is connected to the reset input so that four of the outputs are effectively eliminated, and a one-of-six action is obtained. The outputs go high, in sequence, one at a time. In order to obtain the desired action, it is just a matter of getting each output to activate the appropriate LED's. This is achieved using OR gates, which are formed from diodes (D8 to D18). If we take D1 as an example; this is the centre spot of the die, and it must therefore be switched on when the counter is at 1, 3, or 5. The outputs of the counter are conventionally numbered from 0 to 5 rather than 1 to 6, and D1 is therefore connected via diodes to what would normally be considered as outputs 0, 2, and 4 of IC2. No diodes are required for D6 and D7 as these are only driven from a single output (they are only switched on when a six is 'thrown').

The pairs of LED's are connected in series rather than in parallel as this ensures that they receive the same current, and it also makes more effective use of the limited output current that can be provided by IC2. I used ordinary 5 millimetre diameter red LED's on the prototype, but due to the farily low LED current it is advantageous to use a high brightness type, although there is probably no point in going to the expense of 'ultra-bright' or 'super-bright' types. The current consumption of the circuit depends on the number of LED's that are switched on, but it is usually around 20 milliamps. A fairly high capacity battery such as a PP9 is needed in order to supply this economically.

When constructing the unit, bear in mind that IC2 is a CMOS device and that it therefore requires the standard anti-static handling precautions. Take reasonable care to ensure that the diode decoder stage is wired up correctly. If you want to check that the decoder is correct and the proper counting action is being obtained, try adding a capacitor of a few microfarads in value in parallel with C2. When S1 is operated the count will proceed at a rate which is slow enough for the LED patterns to be clearly seen. This will show up any fault in the decoding so that it can be easily located and rectified. With S1 pressed and the counter operating at full speed all seven LED's will appear to light up continuously. What in fact is happening is that the display is running through 1 to 6 counts so rapidly that the human eye cannot perceive the flashing on and off of the LED's.

MAPLIN'S TOP TWENTY KITS

THIS MONTH	LAST MONTH		DESCRIPTION OF KIT	ORDER CODE	KIT PRICE	DETAILS IN PROJECT BOOK
1.	(1)	◆◆	Digital Watch	FS18U	£2.00	Catalogue
2.	(2)	◆◆	Live Wire Detector	LK63T	£3.95	14 (XA14Q)
3.	(4)	◆	150W Mosfet Amplifier	LW51F	£19.95	Best of E&MM
4.	(6)	◆	Partylite	LW93B	£9.95	Best of E&MM
5.	(5)	◆◆	I/R Prox. Detector	LM13P	£9.95	20 (XA20W)
6.	(7)	◆	U/Sonic Car Alarm	LK75S	£17.95	15 (XA15R)
7.	(8)	◆	Car Battery Monitor	LK42V	£6.95	Best of E&MM
8.	(13)	◆	8W Amplifier	LW36P	£5.95	Catalogue
9.	(3)	◆	Siren Sound Generator	LM42V	£3.95	26 (XA26D)
10.	(9)	◆	PWM Motor Driver	LK54J	£9.95	12 (XA12N)
11.	(10)	◆	Car Burglar Alarm	LW78K	£7.95	4 (XA04E)
12.	(11)	◆	Ultrasonic Intruder Detector	LW83E	£11.95	4 (XA04E)
13.	(12)	◆	27MHz Receiver	LK56L	£8.95	13 (XA13P)
14.	(16)	◆	27MHz Transmitter	LK55K	£7.95	13 (XA13P)
15.	(15)	◆◆	Slow Charger	LM39N	£5.95	25 (XA25C)
16.	(–)	◆	Mini Metal Detector	LM35Q	£4.95	25 (XA25C)
17.	(20)	◆	Car Digital Tacho	LK79L	£19.95	Best of E&MM
18.	(19)	◆	TDA7000 Radio Kit	LK32K	£12.95	9 (XA09K)
19.	(14)	◆	15W Amplifier	YQ43W	£6.50	Catalogue
20.	(18)	◆	50W Amplifier	LW35Q	£17.95	Catalogue

Over 150 other kits also available. All kits supplied with instructions.

The descriptions above are necessarily short. Please ensure you know exactly what the kit is and what it comprises before ordering, by checking the appropriate Project Book mentioned in the list above – see page 55 for details.

REACTION TESTER PARTS LIST

RESISTORS: All 0.6W 1% Metal Film			
R1	1M8	1	(M1M8)
R2,3	5k6	2	(M5K6)
R4	100Ω	1	(M100R)
R5,8	100k	2	(M100K)
R6	10k	1	(M10K)
R7	47k	1	(M47K)
R9 to R22 inc.	470Ω	14	(M470R)
CAPACITORS			
C1	10μF 25V PC Electrolytic	1	(FB22Y)
C2,4,5	100nF Polyester	3	(BX76H)
C3	47nF Polyester	1	(BX74R)
C6	100μF 10V Axial Electrolytic	1	(FB48C)
SEMICONDUCTORS			
IC1	4001BE	1	(QX01B)
IC2	NE555	1	(QH66W)
IC3,4	4026BE	2	(QX15R)
Display 1,2	0.5in Common Cathode LED	2	(FR41U)
D1	1N4148	1	(QL80B)
MISCELLANEOUS			
S1	Push to Make Switch	1	(FH59P)
S2	SPST Ultra-min Toggle	1	(FH97F)
B1	9 Volt PP9 Battery	1	(FM05F)
	Battery Connector	1	(HF27E)
	DIL IC Holder 8 pin	1	(BL17T)
	DIL IC Holder 14 pin	1	(BL18U)
	DIL IC Holder 16 pin	2	(BL19V)
	DIL IC Holder 20 pin	1	(HQ77J)

METRONOME PARTS LIST

RESISTORS: All 0.6W 1% Metal Film			
R1	220k	1	(M220K)
R2	100Ω	1	(M100R)
R3	10k	1	(M10K)
R4	4k7	1	(M4K7)
R5	5k6	1	(M5K6)
R6	2k2	1	(M2K2)
RV1	2M2 Lin Pot	1	(FW09K)
CAPACITORS			
C1	100μF 10V Axial Electrolytic	1	(FB48C)
C2	1μF Polyester Layer	1	(WW53H)
C3	2μ2F 100V Axial Electrolytic	1	(FB15R)
SEMICONDUCTORS			
IC1	NE555	1	(QH66W)
IC2	4017BE	1	(QX09K)
TR1	BC547	1	(QQ14Q)
TR2	BFY51	1	(QF28F)
D1,2	1N4148	2	(QL80B)
MISCELLANEOUS			
S1	4-way 3-pole Switch	1	(FH44X)
S2	SPST Ultra-min Toggle	1	(FH97F)
LS1	66mm Dia. 64 ohm Speaker	1	(WF57M)
B1	PP3 9V Battery	1	(FK62S)
	Battery Connector	1	(HF28F)
	8 pin DIL IC Holder	1	(BL17T)
	16 pin DIL IC Holder	1	(BL19V)

NOISE GATE PARTS LIST

RESISTORS: All 0.6W 1% Metal Film			
R1	120k	1	(M120K)
R2	1M	1	(M1M)
R3,4,8	10k	3	(M10K)
R5,9,13	100k	3	(M100K)
R6,7	1M5	2	(M1M5)
R10	5k6	1	(M5K6)
R11,12	18k	2	(M18K)
R14	47k	1	(M47K)
R15	330k	1	(M330K)
R16	15k	1	(M15K)
R17	2k7	1	(M2K7)
R18	18k	1	(M18K)
RV1	4k7 Lin Pot	1	(FW01B)
CAPACITORS			
C1	100μF 10V PC Electrolytic	1	(FF10L)
C2	330nF Polyester	1	(WW47B)
C3,6,8	2μ2F 100V PC Electrolytic	3	(FF02C)
C4	10μF 50V PC Electrolytic	1	(FF04E)
C5	22nF Polyester	1	(WW33L)
C7,9,10	4μ7F 63V PC Electrolytic	3	(FF03D)
C11	1μF 100V PC Electrolytic	1	(FF01B)
SEMICONDUCTORS			
IC1	4066BE	1	(QX23A)
IC2,3,4	μA741C (8 pin DIL)	3	(QL22Y)
IC5	CA3140E	1	(QH29G)
D1,2	1N4148	2	(QL80B)
MISCELLANEOUS			
S1	SPST Ultra-min Toggle	1	(FH97F)
SK1,2	3.5mm Jack Socket	2	(HF82D)
B1	9 Volt PP3 Battery	1	(FK62S)
	Battery Connector	1	(HF28F)
	8 pin DIL Holder	4	(BL17T)
	14 pin DIL Holder	1	(BL18U)

ELECTRONIC DIE PARTS LIST

RESISTORS: All 0.6W 1% Metal Film			
R1,2	47k	2	(M47K)
R3	10k	1	(M10K)
R4,5,6	390Ω	3	(M390R)
R7	470Ω	1	(M470R)
CAPACITORS			
C1	100μF 10V Axial Electrolytic	1	(FB48C)
C2	2n2F Mylar	1	(WW16S)
SEMICONDUCTORS			
IC1	NE555	1	(QH66W)
IC2	4017BE	1	(QX09K)
D1 to D7 inc.	High Brightness Red LED	7	(WL84F)
D8 to D18 inc.	1N4148	11	(QL80B)
MISCELLANEOUS			
S1	Push to Make Switch	1	(FH59P)
S2	SPST Ultra-min Toggle	1	(FH97F)
B1	9 Volt PP9 Battery	1	(FM05F)
	Battery Clips	1	(HF27E)
	DIL IC Holder 8 pin	1	(BL17T)
	DIL IC Holder 16 pin	1	(BL19V)

DATA FILE

LM1875 20 WATT AUDIO POWER AMP

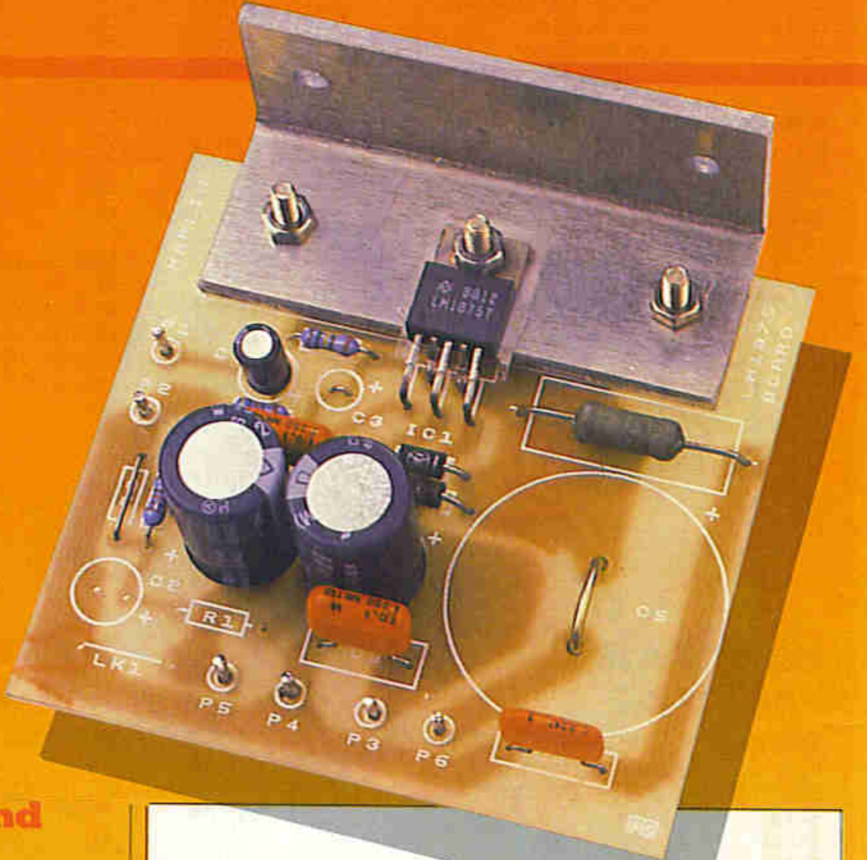

Features

- ★ Output Power up to 30W (rms)
- ★ Wide Range of Supply Voltages
- ★ Split or Single Supply
- ★ Short Circuit Protection
- ★ Thermal Protection
- ★ Low Distortion
- ★ 5 pin TO220 package
- ★ PCB Available

Applications

- ★ High Quality Audio Amplifiers
- ★ Servo Amplifiers
- ★ Bridge Amplifiers

General Description

The LM1875 is a general purpose audio power amplifier that offers very high quality output using a minimum of external components. The IC pin-out is shown in Figure 1. The device operates over a wide range of power supply voltages from 20V to 60V DC and will deliver 20 watts rms into a 4Ω or 8Ω load when operated from a 50V supply. If a 60V supply is used, output powers up to 30W rms may be produced (if an increase in distortion is acceptable). By using advanced circuit techniques the amplifier IC offers minimal distortion even at high power levels. Other features include wide bandwidth, high gain, large output voltage swing and overload protection. Table 1 gives the electrical characteristics of the LM1875 and Figure 2 shows some typical performance characteristics of the IC.

Stability and Distortion

The LM1875 is designed to be stable when operated with a closed loop gain greater than ten; however, as with any other high current amplifier, it may oscillate under certain conditions. Oscillation is often caused by poor circuit board layout or associated with input/output connections. When designing a layout it is important to return the load earth and the signal earth to the main earth point via separate paths. Preferably the load earth should be connected directly to the 0V terminal of the power supply. If the input and load earths are connected to 0V via the same rail, high currents on the rail can generate voltages which effectively act as input signals, leading to high frequency oscillation or distortion. It is recommended that the earth (0V) rails are kept as short as possible and that decoupling capacitors and output compensation

Parameter	Conditions	Typical	Tested Limits
Supply Voltage:			60V (±30V) Max
Supply Current:	P out = 0W	70mA	100mA
Output Power (P_{out}):	THD = 1%	25W	
Load Impedance:			4Ω – 8Ω
THD:	P out = 20W, 4Ω load, Fo = 1kHz –	0.022%	
	P out = 20W, 4Ω load, Fo = 20kHz –	0.07%	
Full Power Bandwidth:			DC-250kHz (−3dB)
Open Loop Gain:	DC	90dB	
Max Slew Rate:		8V/μs	

Table 1. Electrical characteristics of the LM1875.

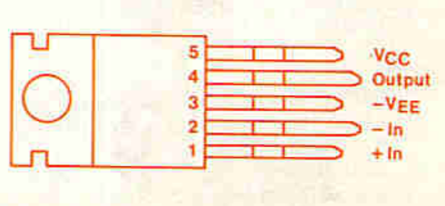

Figure 1. Pin-out of the LM1875.

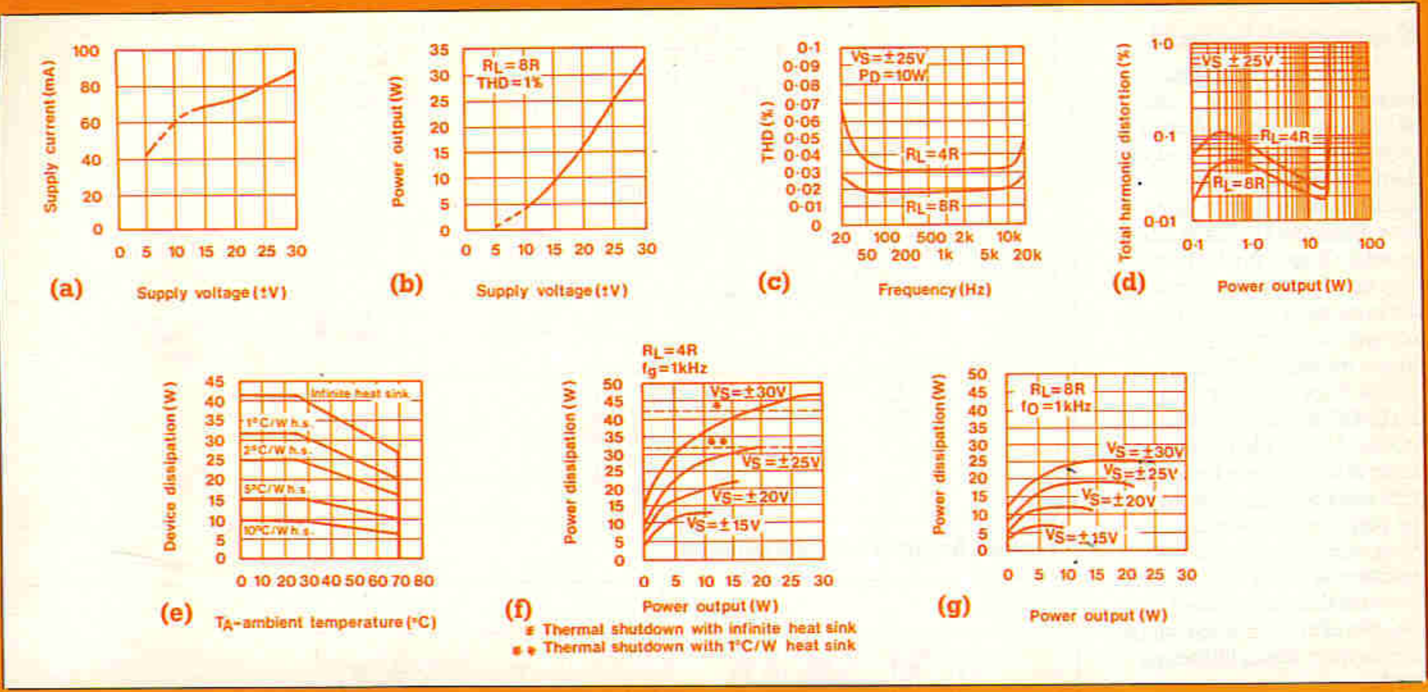

Figure 2. (a) Supply current vs supply voltage (quiescent). (b) Power output vs supply voltage. (c) THD vs frequency. (d) THD vs power output. (e) Device dissipation vs ambient temperature. (f) Power dissipation vs power output (4 ohm load). (g) Power dissipation vs power output (8 ohm load).

components are kept close to the IC to minimise the effects of track resistance and inductance. Sometimes oscillation can be caused by stray coupling between the output and input leads, especially if the leads are long and the source impedance is high; in order to avoid this, these leads should be kept as far apart and as short as possible. It is often possible to prevent oscillation due to stray input/output coupling by fitting a 50pF-500pF capacitor across the circuit input terminals.

In addition to preventing problems with spurious oscillation, layout can also be an important factor in achieving minimum distortion. For low distortion the power supply wiring is also important; this should be kept as far away as possible from the input wiring to help prevent non-linear power supply currents being induced into the IC inputs. If possible the power supply wires should be kept perpendicular to the circuit board for a few centimetres.

Thermal Protection and Heatsinking

The LM1875 incorporates a sophisticated thermal protection system to help prevent any long term thermal stress to the device. If the IC (die) temperature reaches 170°C the amplifier shuts down until the temperature drops to around 145°C; if however the temperature starts to rise again the device will then shut down at around 150°C. The effect of the above characteristic is to allow the device to rise to a relatively high temperature under short duration fault conditions but limit the temperature of the device if the fault condition is sustained; this helps to improve the long term reliability of the IC.

It is important that the amplifier is always operated with a heatsink because even when off load, the device may dissipate up to 6W and when on load the dissipation may be as high as 30W. A heatsink should be chosen that is sufficient to keep the temperature of the device well below shutdown temperature. For reliability the heatsink should be the best possible for the space available.

If the amplifier is powered from a single rail supply, the IC mounting tab may be bolted directly to the chassis (0V). When the device is powered from a split rail supply, to avoid damage, it is important that the tab is completely isolated from 0V; an insulating bush and a mica washer is usually used for this purpose. If the amplifier is powered from a split supply, a larger heatsink may be necessary because the thermal connection to the heatsink through a mica washer is less efficient than a direct connection.

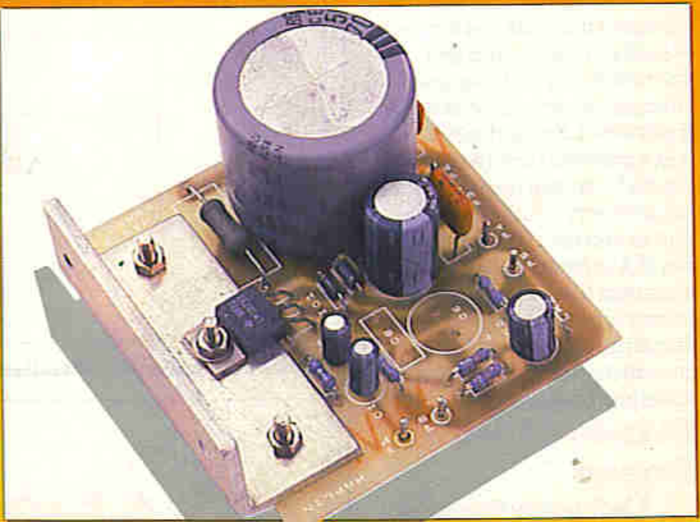

Single rail version.

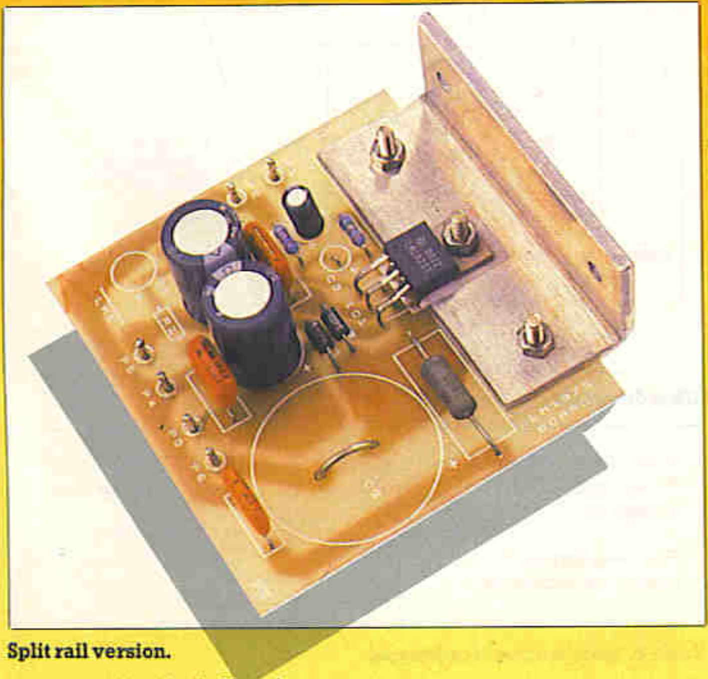

Split rail version.

Current Limit

In addition to thermal protection, the LM1875 also provides current limiting. A power amplifier can be easily damaged by excessive applied voltage or current flow. Reactive loads are often a problem due to the fact that they can draw large currents at the same time as high voltages appear on the amplifier's output transistors. To prevent any damage that may occur, the LM1875 limits the current to around 4A and also lowers the value of this current limit when high voltage appears across the output of the device. Protection is also provided against the excessively high voltages that may appear on the output of the device when driving non-linear inductive loads.

Power Supply

The amplifier may be powered from either a single or split rail supply and will operate over a wide range of voltages between 20V and 60V (between ±10V and ±30V when powered from a split rail supply). Current requirements depend very much on output power and may range from a few mA to over 1A. It is important that the power supply is adequately decoupled to prevent the introduction of mains derived noise into the amplifier.

Printed Circuit Board

A high quality fibre-glass PCB with printed legend is available for the basic LM1875 audio amplifier application. Two different versions of the amplifier may be constructed using the same PCB; one version is for use with a single rail supply (see Figure 3) and the other is for use with a split rail supply (see Figure 4). A combined circuit diagram of both versions of the amplifier is shown in Figure 5 for reference purposes; this is the circuit used to produce the PCB which is shown in Figure 6. Provision is made for a PCB mounted heatsink bracket; power should not be applied to the amplifier until the bracket has been bolted securely to a suitable heatsink (for example, Maplin stock code FJ77J or a heatsink with at least 1500cm^2 surface area). Please note that if the amplifier is powered from a split rail supply, the IC tag must NOT be electrically connected to the chassis (0V); an insulating bush and a mica washer should be used to isolate the tag from the heatsink (see Figure 7). It is recommended that heat transfer compound is smeared between the IC and the

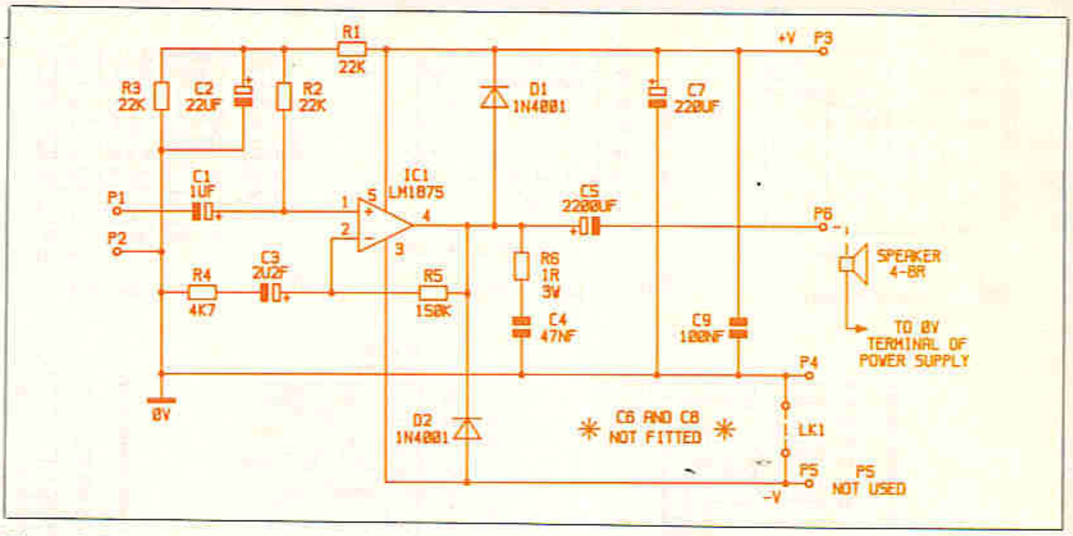

Figure 3. Amplifier for single rail supply.

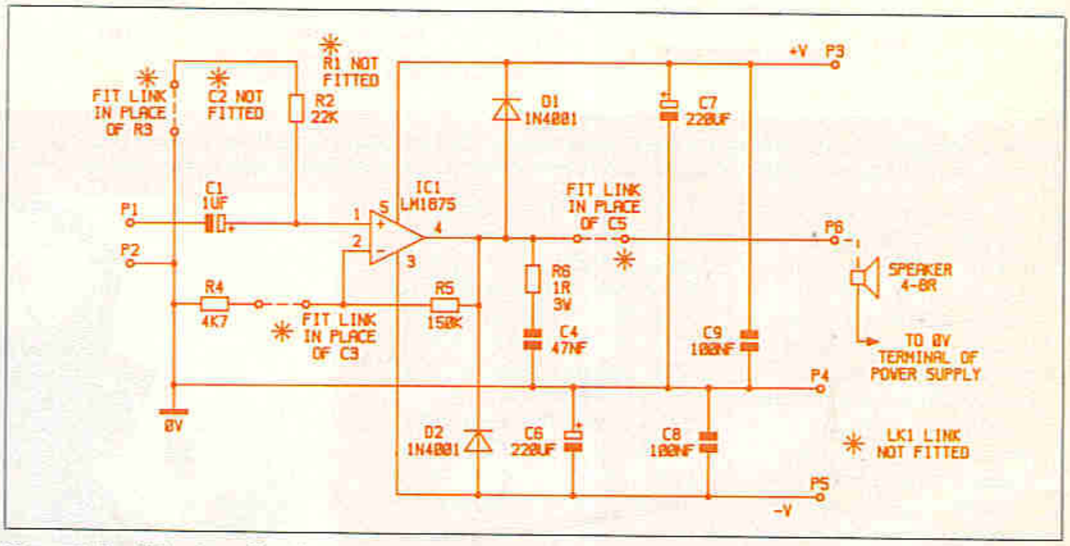

Figure 4. Amplifier for split rail supply.

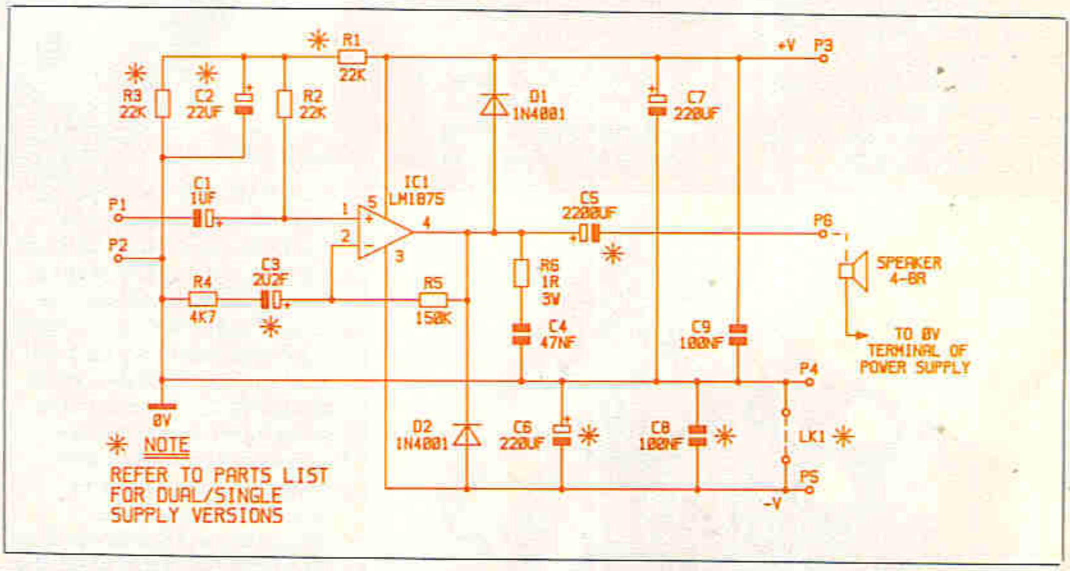

Figure 5. Combined circuit to which PCB is designed.

Power Supply Voltage:	20V - 60V DC	(±10V - ±30V DC)
Power Supply Current:	(quiescent)	85mA (at 60V)
Voltage Gain:	(set by value of R4 and R5)	30dB
Full Power Bandwidth:	(4Ω load)	20Hz - 250kHz (−3dB)
Output Load Impedance:		4Ω to 8Ω

Table 2. Specification of prototype.

heatsink to facilitate the conduction of heat away from the device. If a mica washer is used, the compound should be applied on both the IC and heatsink sides of the washer. A larger heatsink may be necessary for the split rail version of the amplifier.

For connection information, refer to Figure 3 or Figure 4 as appropriate. The power supply is connected to P3(+V), P4(0V) and P5(−V); if the amplifier is powered from a single rail supply P5 is not used. Heavy gauge wire should be used for the power supply and output connections and all leads should be kept as short as possible. The signal input is applied between P1 and P2 using screened cable (XR12N) and the output is taken from P6, the load earth being connected directly to the 0V terminal of the power supply. Finally, Table 2 gives the specification of the prototype amplifier that was built on the PCB (GE13P).

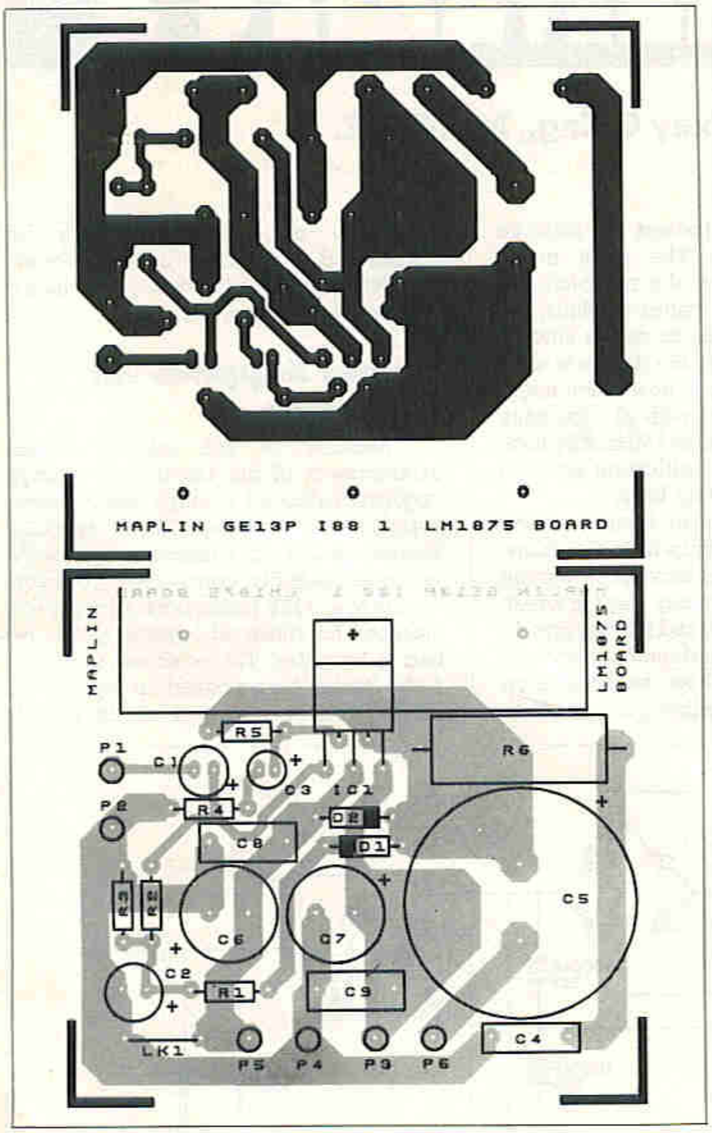

Figure 6. Track and layout of PCB.

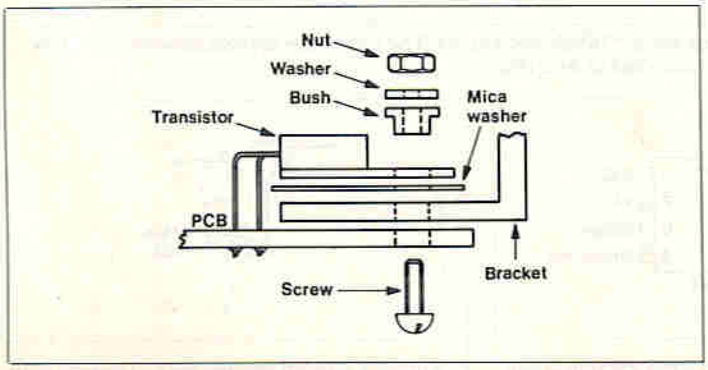

Figure 7. Mounting IC1.

SINGLE RAIL PARTS LIST

Resistors: All 0.6W Metal Film (unless specified)			
R1,2,3	22k	3	(M22K)
R4	4k7	1	(M4K7)
R5	150k	1	(M150K)
R6	1R 3W Wirewound	1	(W1R)
LK1	Link Fitted		
Capacitors			
C1	1μF 100V PC Electrolytic	1	(FF01B)
C2	22μF 63V PC Electrolytic	1	(FF07H)
C3	2μ2F 100V PC Electrolytic	1	(FF02C)
C4	47nF Polyester	1	(BX74R)
C5	2200μF 63V Snap-in	1	(JL38R)
C6	Not Fitted		
C7	220μF 63V PC Electrolytic	1	(FF14Q)
C8	Not Fitted		
C9	100nF Polyester	1	(BX76H)
Semiconductors			
IC1	LM1875	1	(UH78K)
D1,2	1N4002	2	(QL74R)
Miscellaneous			
	PC Board	1	(GE13P)
	Bracket	1	(YQ36P)
	Pins	1 Pkt	(FL21X)
	M3 Bolt x 12mm	1 Pkt	(BF52G)
	M3 Nut	1 Pkt	(JD61R)
	M3 Washer	1 Pkt	(JD76H)

SPLIT RAIL PARTS LIST

Resistors: All 0.6W Metal Film (unless specified)			
R1	Not Fitted		
R2	22k	1	(M22K)
R3	Linked Out		
R4	4k7	1	(M4K7)
R5	150k	1	(M150K)
R6	1R 3W Wirewound	1	(W1R)
LK1	Link Not Fitted		
Capacitors			
C1	1μF 100V PC Electrolytic	1	(FF01B)
C2	Not Fitted		
C3	Linked Out		
C4	47nF Polyester	1	(BX74R)
C5	Linked Out		
C6,7	220μF 63V PC Electrolytic	2	(FF14Q)
C8,9	100nF Polyester	2	(BX76H)
Semiconductors			
IC1	LM1875	1	(UH78K)
D1,2	1N4002	2	(QL74R)
Miscellaneous			
	PC Board	1	(GE13P)
	Bracket	1	(YQ36P)
	Pins	1 Pkt	(FL21X)
	M3 Bolt x 12mm	1 Pkt	(BF52G)
	M3 Nut	1 Pkt	(JD61R)
	M3 Washer	1 Pkt	(JD76H)
	Mounting Kit	1	(WR23A)

The following item is available,
but is not shown in our 1989 catalogue:
LM1875 PCB **Order As GE13P Price £3.45**

ELECTRONICS BY EXPERIMENT

Part 6 by Graham Dixey C.Eng., M.I.E.R.E.

Introduction

The operational amplifier (Op-amp for short) was once a very expensive piece of hardware. It was the basic building block of the 'analogue computer' (hence the designation 'operational' from the operational calculus that it was able to handle) and, as such, was a rather specialised item. Today the situation is quite different. While it is still possible to spend pounds rather than pence on Op-amps, there are many that are very cheap indeed. One of these, the type 741, has been around for quite a few years and, as a general purpose, high-gain amplifier, it has hardly flagged in popularity. Its low cost (about 25p) can be attributed to the emergence and development of integrated circuits over the past two decades. The present day operational amplifier can still perform the mathematical functions of its valve-based predecessor but its low cost makes it very attractive for a wide range of applications and the average user of this device today will hardly even think about the more scientific aspects of its past.

The Perfect Op-amp

It is a convenient starting point to consider the main features of an Op-amp. If the device were perfect, its performance could be summarised as follows:

(a) Infinite gain.

(b) Infinite input impedance (would impose no loading on the signal source at all).

(c) Zero output impedance (no internal losses when driving a load).

(d) Infinite bandwidth (would amplify all signals equally, whatever their frequency).

(e) Zero 'offset' (zero input signal would produce zero output).

Since there is no such thing as perfection, it is reasonable to assume that the practical Op-amp will fall short of the above criteria. However, the closeness with which it can approach them is usually enough for many purposes. For example, the gain cannot be infinite but a gain of 200,000 times (typical for a 741) is certainly very high indeed for such an inexpensive device. The input impedance is of the order of a megohm, the output impedance a matter of ohms; the bandwidth is less easy to define since it depends upon the way the device is used (more specifically upon how much negative feedback is used with it) - for unity gain it can be as wide as 1MHz. The term 'offset' needs some clarification and will be discussed separately later.

The most attractive feature of the general purpose Op-amp is its 'flexibility' in applications. Books have been written devoted solely to the many ways in which the device can be pressed into service. In this series, this part and the next one will be used to show (a) how the application of various types of feedback can produce a variety of circuits that may be considered as 'standard' building blocks, and (b) a few of the many ways in which it can be applied in electronics.

Power Supplies for Op-amps

Because of the internal circuit arrangement of the Op-amp, it actually requires balanced positive and negative supplies for its operation. It is quite feasible to use, for example, a pair of 9V batteries, suitably connected. However, details of a ±15V mains power supply are included for those who prefer not to be tied to batteries. This is shown in Figure 1, the design being based on the 4195 IC which, from a 'plus and minus' pair of

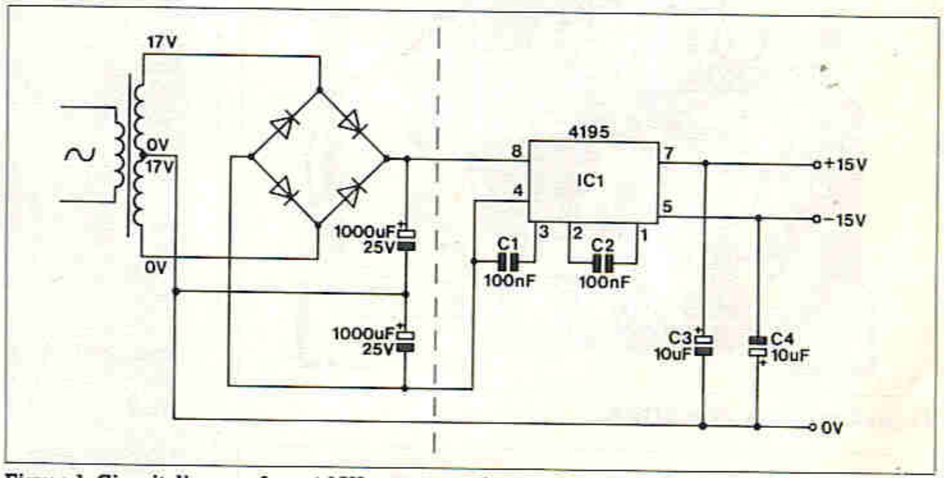

Figure 1. Circuit diagram for a ±15V power supply. The chain line divides the new regulator from the power supply described in Part One.

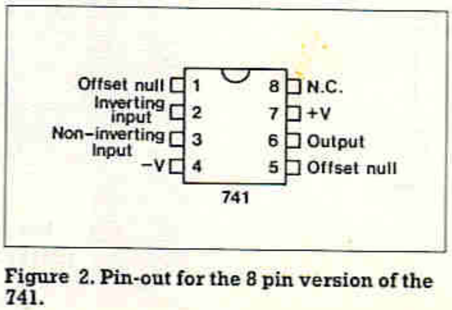

Figure 2. Pin-out for the 8 pin version of the 741.

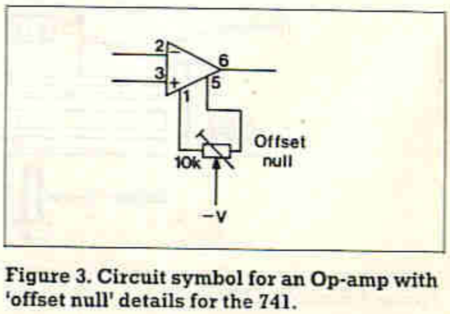

Figure 3. Circuit symbol for an Op-amp with 'offset null' details for the 741.

unregulated supplies will produce the required ±15V supplies with a current capability of 100mA per rail, more than adequate for experimental purposes. In this figure the 4195 regulator, together with its associated components, is to the right of the vertical chain line. The transformer, rectifier and reservoir capacitors to the left of this line can be identified from Figure 1 in Part One of this series. In the latter diagram the negative voltage output from the lower reservoir capacitor is marked as being 'for expansion'; this is the expansion anticipated, though it can also be used for developing other single rail negative supplies if required, using an appropriate chip regulator. If the original power supply of Part One, Figure 1 has not been built then the circuit shown in Figure 1 of this article will stand alone as a suitable Op-amp power supply. Only a few components are needed in addition to the IC itself and the layout is shown, on a small piece of stripboard (0.1" pitch) in Photographs 1 and 2. The only track breaks required are between opposite pins of the IC.

The 741 Op-amp

This Op-amp is actually available in both 8-pin and 14-pin versions. In practice the 8-pin version is probably more convenient and its pin-out is shown in Figure 2. Only one pin, pin 8, is not used. Pins 7 and 4 are for the positive and negative power supplies respectively. To avoid cluttering circuit diagrams, they are not usually shown on them. Only signal and 'offset null' (if required) connections are actually shown. Needless to say, it should be understood at the beginning that all Op-amp circuits require power to be applied to pins 4 and 7 if they are to work! The other pins are shown, with their designations, in Figure 3. This figure shows the standard symbol for an Op-amp.

It will be noticed that the amplifier has two inputs (pins 2 and 3) and one output (pin 6). Against each input there is a symbol, either a 'minus' sign (for the inverting input) or a 'plus' sign (for the non-inverting input). The term 'inverting input' merely means that there is a 180 degree phase shift between this input and the output; thus a positive-going signal at this input produces a negative-going output voltage, and vice-versa. Following logically from this, the term 'non-inverting' input means that there is zero phase shift between this input and the output; thus, in this case, a positive-going signal at this input gives rise to a positive-going output, and vice-versa. These bare facts produce some interesting results as will be seen in a moment. But first some explanation for the 'offset null' control, also shown in Figure 3.

Input Offsets

Op-amps are largely based upon a type of amplifier design, known as a 'differential amplifier'. It is this design philosophy that gives rise to the two inputs just discussed. In theory if the two inputs were strapped together and taken to zero volts, the output of the amplifier should be zero. In practice it might well not be. The difference may be small or large, depending upon the circumstances. It is as if there is a small difference of voltage (the input offset voltage) acting between the two inputs and producing this output. Sometimes it can be quite important that this spurious output, produced under the circumstances described, is reduced to zero. The standard method with the 741 Op-amp is to connect a low value potentiometer, 4k7 or 10k in value, between pins 1 and 5, with the wiper then connected to the negative supply rail. The internal connections from pins 1 and 5 are such that variation of the potentiometer wiper position will reduce the output voltage to zero (monitored on a suitable voltmeter connected between

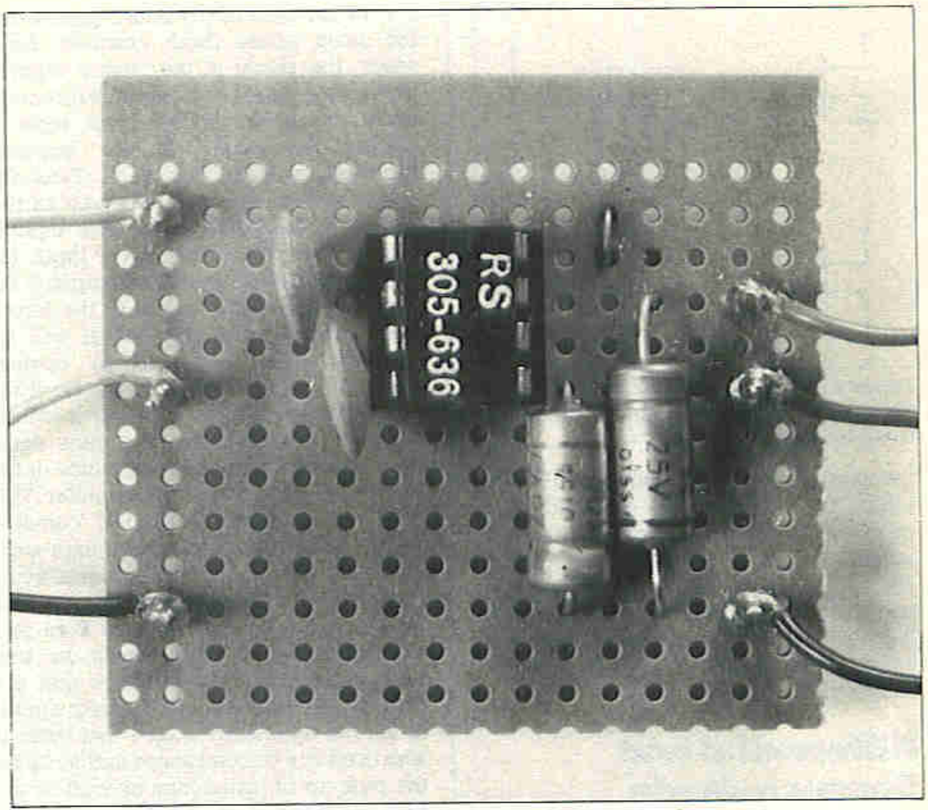

Photo 1. Component side of the ±15V dual rail power supply.

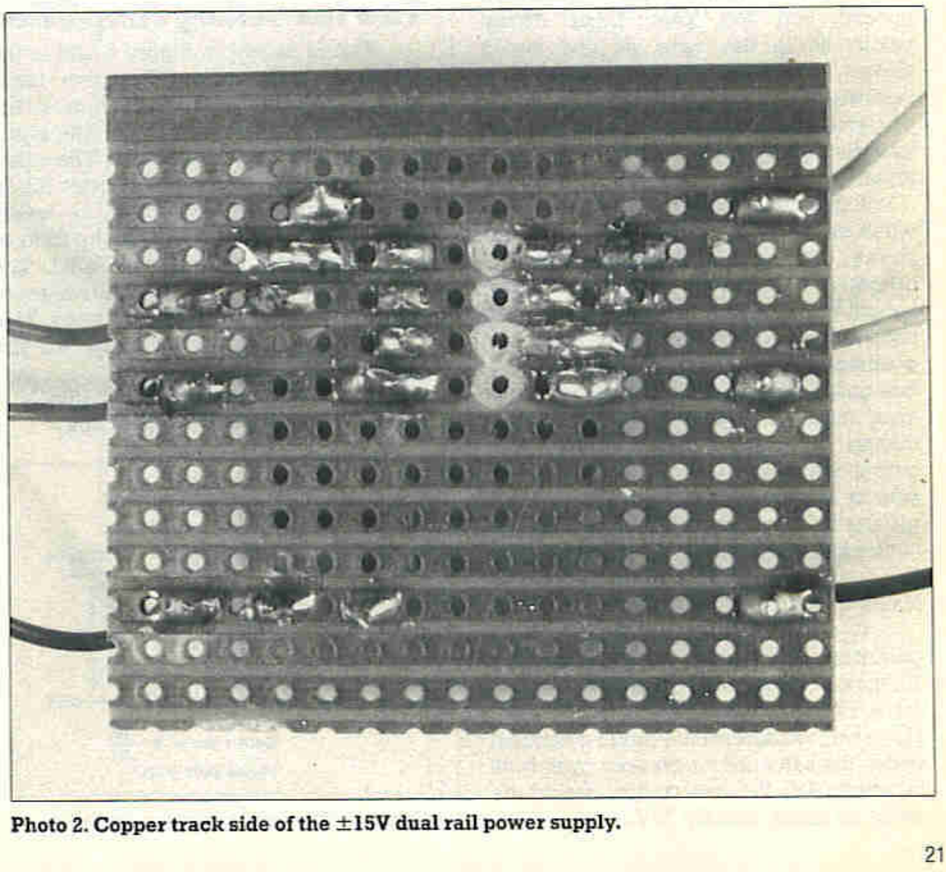

Photo 2. Copper track side of the ±15V dual rail power supply.

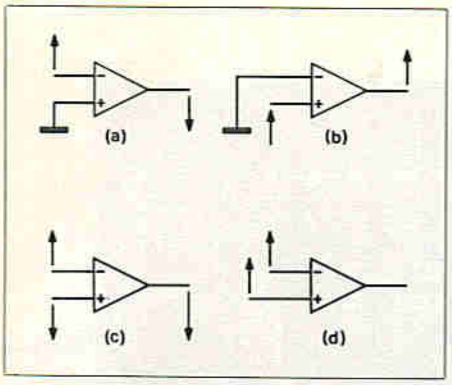

Figure 4. Modes of operation of an Op-amp, (a) and (b) single-ended mode, (c) differential mode, (d) common mode.

the output pin, pin 6, and the 0V rail) when the inputs are 'strapped and grounded'. However, there are quite a number of cases when the offset null control is more of a luxury than a necessity. It tends to be needed under high gain operating conditions with low value d.c. inputs rather than low gain a.c. usage.

Differential and Common-Mode Operation

Figure 4 shows four cases that illustrate what happens at the output for certain polarities of input voltages.

Figure 4 (a) and (b) shows what is often called 'single-ended' operation. Only one input is driven, the other being at 0V. In (a) the 'plus' input is grounded and the 'minus' input driven in a positive direction; because signals at this input experience a 180 degree phase shift, the output voltage goes in a negative direction. In (b) the 'minus' input is grounded instead and the 'plus' input driven positively. In this case, as one would expect, the output is also going in a positive direction. This is a re-statement of what was said previously when introducing the idea of the two types of input.

Figure 4 (c) and (d) show the case when both inputs are driven. Figure 4 (c) shows the case of 'differential mode' operation in which both inputs are driven by anti-phase signals. In the specific case shown the signal at the 'minus' input is a positive-going one (producing a negative-going output) while the signal at the 'plus' input is negative-going (also producing a negative-going output). The output signal is effectively, therefore, the sum of two negative outputs; it is much greater than the output due to either input acting alone. If both inputs were reversed the output would be a positive voltage instead.

To take this a stage further, if the gain from either input to the output was 10, then in single-ended mode the output for a 1V input would be 10 x 1 = 10V. However, for differential mode operation under the same circumstances, with both inputs at 1V, the total output would be twice as great, namely 20V.

In the case of (d) both inputs are of the same phase (both positive). As a result, the signal at the 'minus' input is driving the output in a negative direction, while the signal at the 'plus' input is driving the output in the opposite direction, namely positively. Thus the output will be the 'algebraic sum' of two signals. If the signal at the 'plus' input is greater than that at the 'minus' input, the net output will be a positive output; if the signal at the 'minus' input is the larger one, however, the net output will be negative. This leads to an obvious question - what will the output be if the two inputs are equal? In theory it will be zero; in practice it may not quite equal zero because of slight inequalities in the two signal paths within the amplifier. This mode of operation is termed 'common mode'. The value of it is that it expresses the ability of the amplifier to reject equal signals of the same phase arriving at both inputs. The term signals, used here in a general sense, is what masks the true meaning of this. The voltages that are actually rejected are not desired signals at all, but undesired 'noise'! The latter is also used in a general sense and includes the pick-up of mains hum as well as the drift voltages that occur in all d.c. coupled amplifiers.

Thus, as far as true signals are concerned, the mode used will always be either single-ended or differential mode. Now some of the basic ways of setting up an Op-amp will be described. Essentially it comes down to choosing resistor values that will establish the required value of voltage gain, and also choosing a configuration that either determines the phase shift (zero or 180 degrees) or a particular type of amplifier.

The Inverting Amplifier

This is shown in Figure 5 and is the standard configuration. Negative feedback is applied from the output to the inverting input via resistor R2. The input, Vi, is applied via resistor R1. The other input is grounded through resistor R3. In this arrangement the gain is easily calculated and simply equals the ratio of the resistors R2 and R1, i.e. R2/R1. The phase shift, over the normal range of frequencies, is exactly 180 degrees. This is the first circuit to hook up, for the following two cases:

(a) R1 = 10k; R2 = 100k; R3 = 10k.
(b) R1 = 10k; R2 = 10k; R3 = 10k.

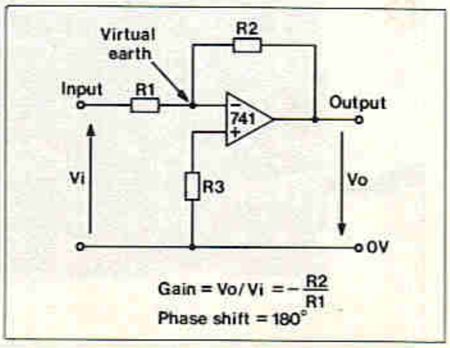

Figure 5. The basic inverting amplifier.

An input voltage in each case of about 1V peak to peak (it isn't the least bit critical) will produce sensible size outputs for both cases. Any audio frequency, say 1kHz, will be suitable. A CRO will be needed to observe the relative values of input and output, both in terms of their amplitudes and relative phases. Expected results are a gain of 10 for case (a) and a gain of 1 for case (b), the phase shift being 180 degrees in both cases.

The experiment can be taken further. A value for R2 of 1M can be tried but it will now be necessary to reduce the input voltage. Why? Try it and see. An interesting result is seen if, with the gain as set in (a) for example, the frequency is increased well above the audio range into values of the order of hundreds of kHz. The limitations of the 741 in terms of its ability to handle high frequencies will become apparent. Look both in terms of output amplitude and phase shift.

The Virtual Earth Concept

The term 'virtual earth' is used frequently in connection with Op-amps and often causes confusion. It needn't because it isn't a difficult idea. In Figure 5 the junction of R1 and R2 is referred to as the virtual earth point. It gets this name as follows.

In the preceding experiment an input of 1V was used and a sensible output (e.g. 1V or 10V) obtained. Yet it was said earlier that a typical gain for a 741 Op-amp is 200,000 times. There may appear to be a discrepency here. There isn't. Suppose that the Op-amp shown in Figure 5 actually does have a gain of 200,000. All this means is that an input voltage at either the 'minus' or 'plus' input will be amplified this number of times. The confusion arises because there is one value of input voltage at the 'minus' input of the Op-amp itself and quite a different one at the terminal marked 'input' (the voltage Vi). For example, we know what Vi is because we set it up with our signal generator - it was 1V! The value of voltage at the 'minus' terminal we would have great difficulty in measuring but it can be deduced from sheer logic - by knowing the values of output voltage and Op-amp gain.

Suppose the output voltage is 1V and the Op-amp gain is 200,000. Then the signal voltage at the 'minus' input is 1/200,000 = 5μV.

Thus, the effect of the negative feedback produced by the resistors R1 and R2 is to attenuate the voltage at the input terminal, Vi, from the high value of 1V down to the very low value indeed of 5μV. Because the actual value of the voltage at the 'minus' input pin is always so very small, it is 'virtually' equal to zero (especially compared with Vi); consequently it is referred to as a 'virtual earth'.

Because the value of R2 in Figure 5 controls the amplifier gain, by making it variable, the gain can be varied. A possible arrangement, in which a gain variation from unity to 100 is available, is shown in Figure 6.

Amplifiers with Zero Phase Shift

Sometimes an amplifier is required in which the gain can be defined by the value of a resistor, but which has zero phase shift. It isn't just a matter of taking Figure 5 and 'swapping over' the inputs. Instead the circuit of Figure 7 is used. The resistor R1 plays no part in determining the gain; it will merely limit the input signal current. The gain is determined by the values of R2 and R3, which set up a specific value of negative feedback. The gain is not just equal to R2/R3 but a 'one' has to be added on; voltage gain = 1 + R2/R3. Thus if a gain of 10 was required, R2 could be 9k and R3, 1k. To achieve a value of 9k (not a standard value), R2 would most conveniently be represented by a fixed resistor of value 8.2k in series with a preset potentiometer of value 2.5k, R3 being a fixed 1k resistor. This circuit should also be hooked up and the gain and phase shift measured, using a 1V input as before. Once again it is interesting to see how the circuit performance falls off at high frequencies.

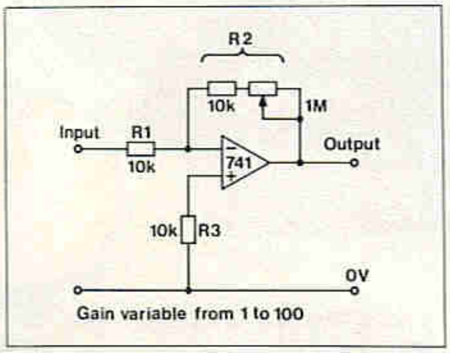

Figure 6. Inverting amplifier with gain variable between unity and 100.

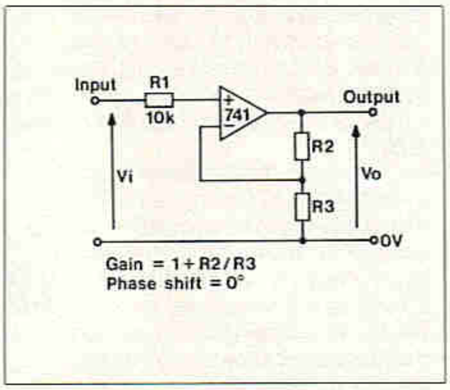

Figure 7. The non-inverting amplifier.

An amplifier that has a voltage gain of unity with zero phase shift will have an output voltage that is exactly the same as the input voltage. The only difference will be that at the output the source impedance is very low. Such a circuit acts as a 'buffer' and is usually inserted between a point of relatively high impedance and a low impedance load. Another example of a buffer is an emitter follower. The Op-amp buffer is shown in Figure 8 and is known as a 'voltage follower'. It can be seen to be an extreme case of the previous circuit of Figure 7. It is extreme because in it, R2 is equal to 'zero' and R3 is equal to 'infinity'. The ratio R2/R3 disappears and leaves a gain of one. Try hooking this up and proving the point. What will also be evident is that the bandwidth is very much greater. An acceptable performance up to 1MHz or so can be expected.

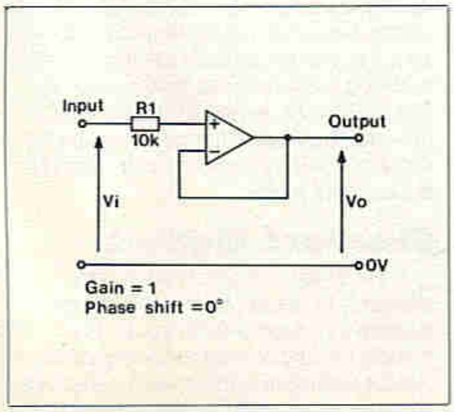

Figure 8. The voltage follower.

Adding and Subtracting

The circuit of Figure 9 is a summing amplifier. It is, in effect, the inverting amplifier of Figure 4 with several inputs. As a result, the output is proportional to the sum of the input voltages. The actual expression for calculating the actual output voltage is given in this figure. The interesting case is the one where R1 = R2 = R3 = R4; the output voltage is now the actual sum of the separate input voltages, that is $V_0 = V_1 + V_2 + V_3$. This also works if any of the input voltages are negative.

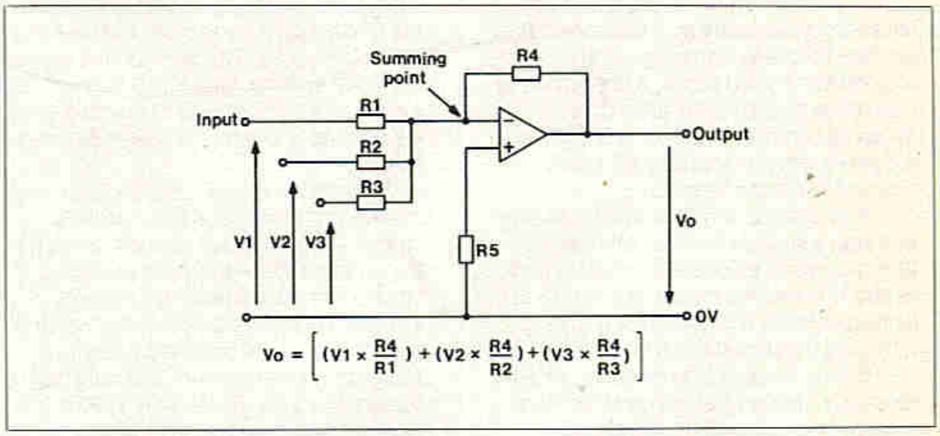

$$Vo = \left[\left(V1 \times \frac{R4}{R1}\right) + \left(V2 \times \frac{R4}{R2}\right) + \left(V3 \times \frac{R4}{R3}\right) \right]$$

Figure 9. A three-input summing amplifier.

The circuit of Figure 10 is a dual purpose one. Taking one application, it is a subtractor giving an output that is proportional to the difference between V_1 and V_2; the actual expression appears on the circuit. Again there is a special case, when n = 1 or, in other words, when all resistors have the same value. Try hooking this circuit up with 10k for all the resistor values. It should be found that the output is zero (or very nearly so) whenever the two input voltages are equal (and of the same phase), whatever their actual values. What it is now doing is effectively comparing the two inputs and producing zero output when they are found to be equal. This circuit is known as a 'comparator' and is a particularly important one.

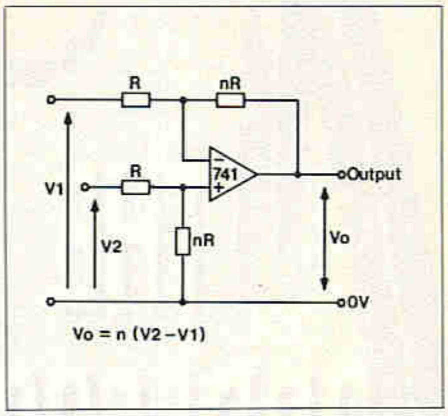

Figure 10. The subtractor or comparator.

The Integrator

This circuit arrangement, shown in Figure 11, looks like the inverting amplifier of Figure 4, but with feedback via a capacitor instead of a resistor. When it is remembered that a capacitor can produce 90 degrees of phase shift, it becomes logical that this arrangement phase-shifts sinewaves by 90 degrees instead of the zero or 180 degree shifts of the previous circuits. Try it and see.

Interesting though this might be, it is its behaviour with step inputs and square-waves that is especially important. Suppose that the output voltage is 0V at the instant that a positive step of voltage is applied. The output immediately starts 'ramping' negatively at a rate determined by the values of R1 and C1; it will go on doing so until it reaches the most negative voltage in the circuit, which is the value of the negative supply rail. If, before it reaches this value, the step input is reversed in polarity the ramp will reverse in direction. So, if a square-wave input is used the ramp will reverse, whenever the square-wave re-

Continued on page 63.

THE CORDLESS PHONE BOX ARRIVES

Report by Alan Simpson

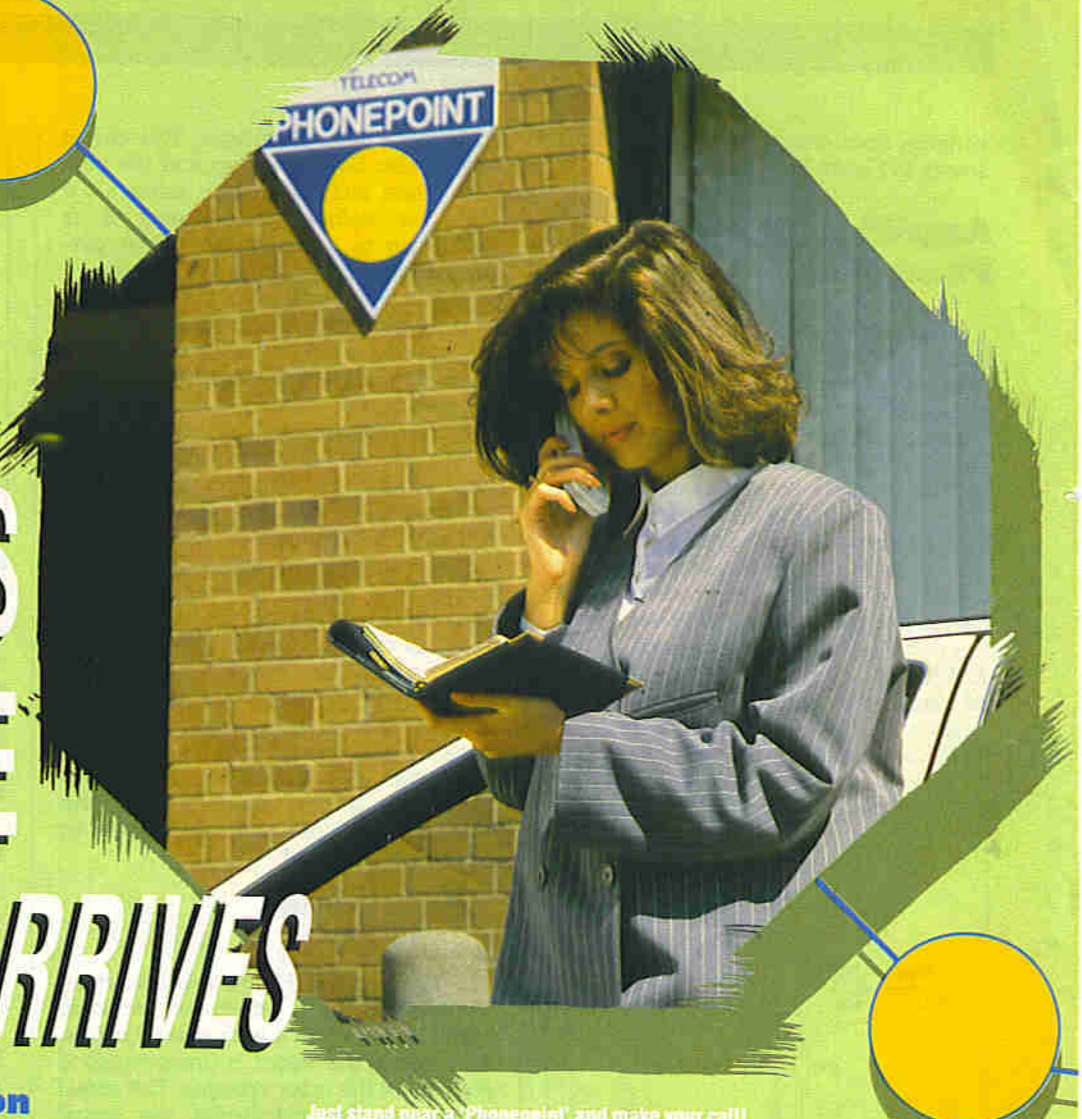

Just stand near a 'Phonepoint' and make your call!

The days of standing in line at Waterloo Station or Heathrow for an available BT or Mercury pay phone are now numbered. The cordless telephone is moving out of the home and office and going public. A Phonepoint or Phonezone situated at the Brent Cross Shopping Centre or any other public place, will give fast digital access to the public switched telephone network.

Provided you have remembered to take with you, your body profiled, lightweight, battery powered telephone handset, you will be able to communicate with the world – or more specifically with your boss or partner, explaining the current travel problem.

Driving the cordless revolution, or more accurately, the new generation of cordless telephones known as CT2, has been the British Telecom Research Laboratories at Martlesham, near Ipswich. Here Bob Swain who heads CT2 development, and his team, have been integrating technologies such as radio, telephony and digital communications over the past six years.

Apart from interfacing technologies, Bob Swain has been relating closely with many national and international standard fixing bodies, authorities and PTTs. British Telecom sees CT2 as being the key to personal mobile telecommunications, achieving an even greater user base than the cellular telephone network.

Cordless Phones go Hi-Tech

Present day cordless telephones (CT1s) provide a somewhat basic service, substituting an analogue radio link in place of the cord between the handset and base of a normal telephone. This provides the user with increased mobility, typically up to about 200 metres with the telephone base acting also as the recharging unit for the battery powered handset.

For British Telecom, the problem relating to the first generation cordless phones has been that of success. In the UK, the domestic user – the prime marketing target – has already reached a near 7% saturation point with over a million cordless phones in place, all providing a potential source of interference with their neighbours cordless systems. By the early 1990's, this nuisance factor could be even more of a problem with an anticipated five million cordless phones in use.

The new generation of digital cordless telephones (CT2) falls somewhere between cellular radio and the payphone service, providing more potential than any existing telephony system and providing a better solution than even the standard issue wired phone. When used as a public 'Phonepoint' the digital CT2 handset will operate to a low-powered radio terminal, with the signal being received by a special 'black box' which links the call into the national telephone network.

Unlike the first generation CT, with one of eight pre-set frequencies, the digital version will incorporate some 40 channels with built-in software intelligence automatically allocating the least congested channel frequency. The CT2 'black box', not much bigger than a shoe box, can be situated out of sight and harms way on a suitable wall.

In the office, CT2 will replace the need for expensive wiring, giving every business user the opportunity to have a cordless handset. British Telecom are developing a complete range of business products from a simple cordless extension to a full cordless PBX.

The key to the new British Telecom system is the CT2 Dynamic Channel Allocation which can automatically allocate any of the forty available channels during usage. While the first generation for CT1s had allowed up to 100 users per square kilometre, the CT2 40 channel allocation will serve some 5,000 users per square kilometre in a residential environment.

The fact that CT2 allows for greater density of users to operate together without destructive conflict or interference, will open up the market for cordless extensions linked to PABXs in the business sector, believes British Telecom. Indeed BT is presently investigating ways of further increasing the potential cordless telephone user-density in the business sector.

Standard Matters

For British Telecom in particular, standards have been the major concern, especially standards which govern the number of radio channels and frequencies and the method in which speech is digitised and transmitted. OFTEL, the UK telecoms authority, has been maintaining a close

Ferranti 'Zonephone'.

interest in emerging UK standards which hopefully will be accepted in Europe.

Once CT2 is adopted as standard in Europe, up to 70% of all extensions could eventually be cordless. Like other PTTs in Europe, British Telecom believes that there will be major marketing prospects in Europe where mobile telecoms systems have yet to make an impact. CT2 is also gaining a lot of interest from PTTs in North America and Australasia.

The benefits to PTTs are considerable. With a Phonepoint application, the PTT can offer an additional service to payphones and consequently CT2 will generate additional revenues. Users also share cost saving advantages. Unlike cellular radio, which provides users with a nationwide roaming capability. CT2 provides a service to the less migratory, more localised sector of the travelling public. CT2 does not involve the high costs associated with the cellular networks ability to find a user anywhere in the country – both in equipment and calls – just a low cost handset and base station.

Phone Home from Safeways

Body profiled, low powered cordless handsets can be used to make a public switched network telephone call from a variety of Phonepoints or zone phones, with computers sorting out user authorisation and billing procedures. Locations will include railway stations, airports, your local Safeway shopping centre, garages and motorway lay-bys, caravan parks, hospitals and almost anywhere which currently feature a gathering of call boxes.

Providing the CT2 user stays in range of the base station or Phonepoint, a distance of up to 250 metres depending on the particular terrain, users will enjoy a full scale digital service. Major features of the CT2 standard will include: Security of call set-up and billing. Communications privacy. Resilience and ability to avoid extraneous interference. Dependable call set-up and continuity. Transmission quality.

Meanwhile, the drawbacks of CT2 are certainly in the limited category. When used in association with public Phonepoints, CT2 will be unable to handle incoming calls and any used within range of the Phonepoint base station. However, by combining CT2 with a national paging service, incoming calls can be noted and returned from the local Phonepoint. With over half a million wide area pagers already in use in the UK, BT see no problem in establishing two-way communications – even to the extent of building-in a pager within the CT2 handset.

Billing is similarly not a problem. According to British Telecom, technically it can already be done. Users would be able to choose whether the payment charges should go to the home or business address. By means of secure coding it could even be possible to relate to the caller's credit card. All methods would, of course, incorporate a user validation PIN security check.

In the UK, CT2 is arriving much sooner than anticipated. Ferranti is expected to offer an interim standard system (with the blessing of OFTEL) with a field trail of Phone Zones in early 1989. In fact there is an impressive number of applicants lining up for an opportunity to provide a UK service. Apart from BT who are bidding for a UK franchise in association with their CT2 partner France Telecom; Ferranti, Philips, Mercury, Racal, and GEC Marconi Telecommunications are among those hoping to win one of the three promised DTI licence allocations.

Price Matters

British Telecom are expected to base their marketing approach on the price differential between cellular and CT2 that results from the service differences. Although there will be a premium call charge cost associated with Phonepoint calls (part of which will be paid to the site owner or operator), costs will be much lower than cellular radio. In due course, given the full application of integrated circuit techniques and common industry standards (which must assist mass production) across a range of products, a handset could retail for well under £100. When the cost of wiring a modern office building is taken into account, the price of 'wireless' CT2 scores even more bonus points.

Geoffrey Vincent of PA Technology based in Melbourn, Cambridgeshire, who has been closely involved in CT2 for a number of years, agrees. "The volume of calls from the proposed 'zonephones' can be expected to dramatically increase with CT2 providing the right package of facilities for the communications market. The UK has achieved a world lead, one which will pay high technology dividends well into the future."

The 1992 European Harmonisation policy will give an additional boost to digital cordless systems. By that time, Europe will probably have firmed-up on standards and British Telecom and other service providers will have implemented CT2 products and Phonepoint operations widely.

Looking forward, industry commentator Dr. Adrian Stokes of comms consultancy Computer Advanced Technology, sees Phonepoints being installed in trains and acting as p.c. modems, and providing cordless fax facilities. Up to 10,000 Phonepoints could be in place within the first two years of being introduced.

"Don't forget to take your phone", could soon be a standard reminder as you leave your home or office.

Exploring Radio

by Graham Dixey C. Eng., M.I.E.R.E. Part 6

Introduction

The quality of the sound output from f.m. (frequency modulation) broadcasts is undoubtedly superior to that obtained from a.m. (amplitude modulation) signals, as are received from medium and long wave stations. This is due to the wider signal bandwidth that is possible by using a V.H.F. carrier. In addition to better quality of sound output, it is possible to take advantage of the wider available bandwidth to provide stereo sound. What has to be maintained is compatibility with receivers that are only designed for mono reproduction. The system that is used in the U.K. is a modified version of the American Zenith – G.E. system. The tuning and demodulating processes are the same for both mono and stereo receivers. What the stereo receiver has, that is not provided in a mono receiver, is a stage that separates out the left and right signals for feeding to separate left and right channel audio amplifiers. This extra stage is called a 'stereo decoder' and, apart from a few discrete components, is a single integrated circuit. It is a fairly standard technique based upon the use of a Phased Lock Loop Detector, and a Maplin designed PCB already exists for one, using the MC1310P decoder IC. The aim of this article is not, therefore, to develop a stereo decoder from scratch, but to explain, fairly simply, the nature of the stereo signal that modulates the f.m. carrier, how to use the decoder IC to produce the separate left and right hand channel signals, and how to convert an existing mono receiver so that it will deliver a stereo output. As an example, the Maplin f.m. receiver, whose construction was described in 'Electronics' Issue 27, will be used to show how to effect a typical conversion. Naturally, provision of stereo sound implies a stereo audio amplifier, for which there are many possibilities. One of these will be described, the design includes a PCB for ease of construction.

The Stereo Multiplex Signal

The complete modulating signal containing all of the necessary information for stereo reception is shown in Figure 1. The r.f. carrier is not shown but is not important to the discussion anyway. The actual frequency spectrum of the multiplex signal, as shown in this figure is seen to extend from 30Hz to 53kHz. This is based on the assumption that the audio-frequency range for the speech or music being transmitted lies between 30Hz and 15kHz, these figures being arbitrary and chosen as merely convenient to illustrate the explanation. The signal is seen to consist of several parts, as follows:

(a) A composite signal containing both left (L) and right (R) channel information and occupying the frequency range from 30Hz to 15kHz. This is pure mono information which is used by 'mono-only' receivers. In the latter case all frequencies of the multiplex signal above 15kHz are filtered out and are, therefore, lost.

(b) A 19kHz 'pilot tone' which has two functions. The main function is to re-generate what is called the '38kHz sub-carrier' on which the stereo information sits. The secondary function is to identify, in the case of stereo receivers, that the transmission being received is a stereo one (some f.m. transmissions are in mono) and to switch on a stereo 'beacon' on the receiver front panel to indicate this fact to the listener. Thus, as one tunes through a number of stereo signals, this beacon goes on and off as each station is passed through. It acts, in effect, as a crude tuning indicator. This pilot tone is of very low amplitude.

(c) A double-sideband signal, each sideband covering the audio range already stated, i.e. 30Hz-15kHz, with a suppressed sub-carrier of 38kHz. These sidebands each represent a 'difference signal', L−R, either of which, used in conjunction with the L+R signal, can be used to reconstitute the separate L and R signals.

Pre-emphasis and De-emphasis

Part of the quality of an f.m. broadcast signal is due to its high signal/noise ratio. This is due not only to the very nature of frequency modulation but also to a pair of complementary operations carried out at the transmitter and receiver.

Pre-emphasis is the name given to the process at the transmitter whereby the higher audio frequencies are given a 'boost'. De-emphasis is applied at the receiver in the form of 'top-cut' that brings the higher audio frequencies back to their proper value relative to the rest of the audio-frequency spectrum.

This may not seem to have achieved much, since as far as the signal is concerned, we are back where we started! The clue lies in the words, 'as far as the signal is concerned'. As far as noise is concerned, the situation is quite different. Some of the noise picked up by a broadcast signal is done so in the transmission path between transmitter and receiver. In f.m.

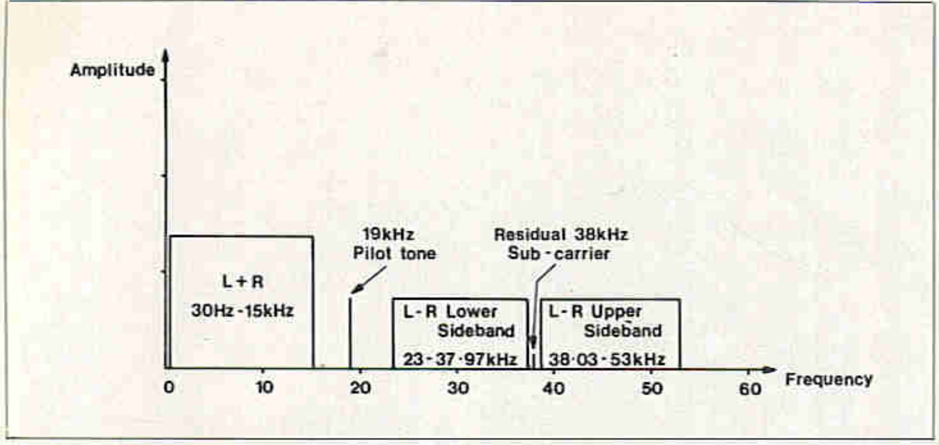

Figure 1. The frequency spectrum of the stereo multiplex signal.

receivers the higher frequency components of noise are the most troublesome. Which is why the de-emphasis at the receiver is in fact top-cut that reduces the higher frequency noise components.

If this top-cutting action were applied without any pre-emphasis at the transmitter the result would be an audio output that was very low in high frequency content. However, by applying pre-emphasis at the transmitter, the higher modulation frequencies are unnaturally boosted so that, when de-emphasis is applied at the receiver, they merely come back down to the correct level, while the noise is reduced. For example, if 6dB of pre-emphasis was applied at the transmitter and −6dB of de-emphasis at the receiver, the signal would be the same but the noise would be 6dB less.

This discussion has a considerable relevance to the present case which is leading up to the matter of turning a mono receiver into one that handles stereo. When discussing Figure 1, we noted that the mono receiver only needs the first signal 'block' of the multiplex signal, extending from 30Hz to 15kHz in the example. It is normal in mono receivers to place the de-emphasis components at the output of the demodulator where they will act on the multiplex output, nicely filtering out the 19kHz pilot tone and the L−R sidebands. This is fine for a mono receiver which doesn't need these outputs but is no good for a stereo receiver, which requires them to operate the decoder in order to develop the 'beacon' and stereo outputs.

It is obvious, therefore, that any conversion of a mono receiver to a stereo version will involve identifying the de-emphasis components at the demodulator outputs, removing them, and replacing them (now in duplicate for the two channels) at the decoder outputs. These components are a single resistor and capacitor. They do not have particular values but are specified by a time constant which, in the U.K. system, is 50μs. That is, the RC product of the de-emphasis components is equal to:

$$50 \times 10^{-6} \text{ seconds}$$

In the stereo decoder described in this article the de-emphasis components have the following values: R = 4.3k and C = 12nF. The time constant calculated from these values is then given by:

De-emphasis time constant

$$= 4.3 \times 10^3 \times 12 \times 10^{-9} = 51.6\ \mu s$$

Thus, the stipulated value of 50μs is nominal, especially when the tolerances of the components are taken into account.

The block diagram of a complete stereo f.m. receiver is shown in Figure 2. The output from the f.m. demodulator is the stereo multiplex signal. The decoder thus receives the 19kHz pilot tone and the L+R and L−R signals. What it does with the latter pair of signals is best explained with the simplest of simple algebra!

If these two signals are *added* together we get:

$$(L+R) + (L-R) = L+R+L-R = 2L$$

The R signals disappear, leaving a totally Left signal. Now if the *difference* of these two signals is taken instead, we get:

$$(L+R) - (L-R) = L+R-L-(-R)$$
$$= L+R - L+R = 2R$$

This time the L signals disappear, leaving a signal that is totally a Right signal.

The decoder also produces a switched output to operate the stereo beacon; the latter is usually just a LED as these are simple to switch, require little current, are reliable and visible.

The L and R outputs now go to a block marked 'de-emphasis'. It is shown as a separate block, even though there are only four passive components in it, because of the importance of its function, as previously described.

The de-emphasised audio channels now drive a pair of audio power amplifiers. The volume controls, and any tone controls (if provided), will be 'ganged' to adjust both channels simultaneously. A balance control is often provided to allow equalisation of the sound level from each channel to obtain a full stereo effect.

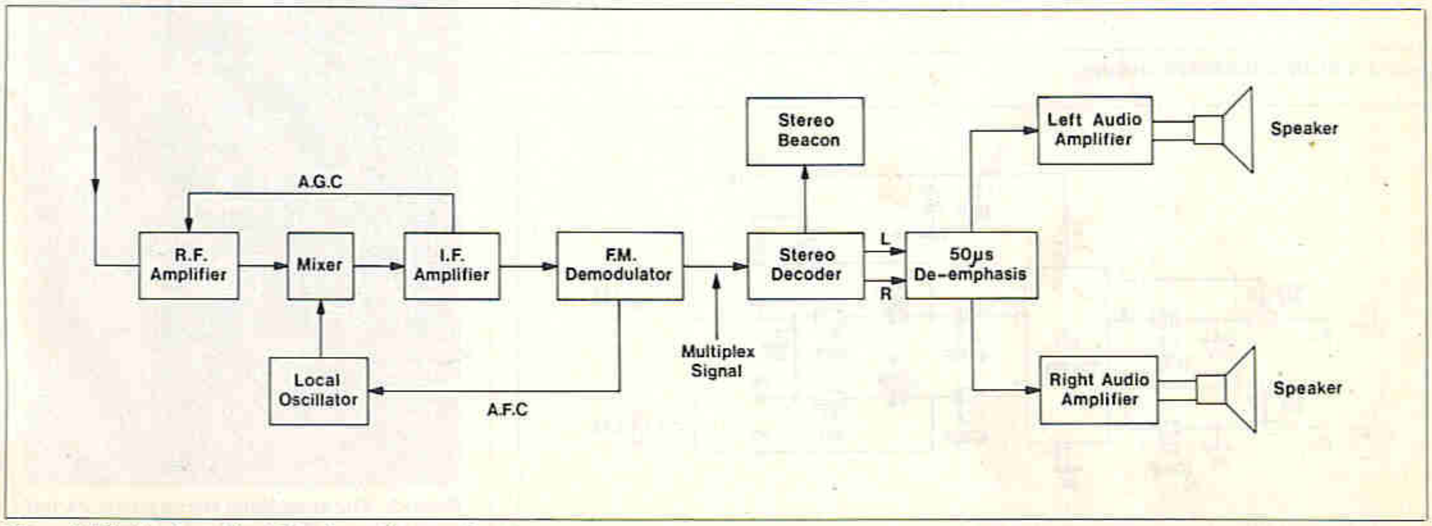

Figure 2. Block schematic of the stereo f.m. receiver.

The Stereo Decoder

The stereo decoder circuit is shown in Figure 3, from which it is seen that it consists of a complex chip, the MC1310P itself, and a handful of discrete components. Most of these cannot be explained without reference to the internal workings of the IC, rarely a profitable enterprise. Those with obvious functions are as follows.

R1/C2 and R2/C3 are the de-emphasis components for the Left and Right channels, respectively. Diode D1 with its series dropper R5 is the stereo beacon LED. C1 is the input coupling capacitor, in series with which is an RC combination containing a pre-set variable resistor RV2 that has to be adjusted for best 'stereo separation', that is adjusted until, in the opinion of the listener, there is an obvious distinction between the outputs from the two speakers. Another pre-set variable resistor RV1 is provided that has to be adjusted so that the internal oscillator generates a 19kHz signal, which can be seen and measured at Pin 10 of the IC. A switch S1 is provided to allow the user to switch between mono and stereo operation.

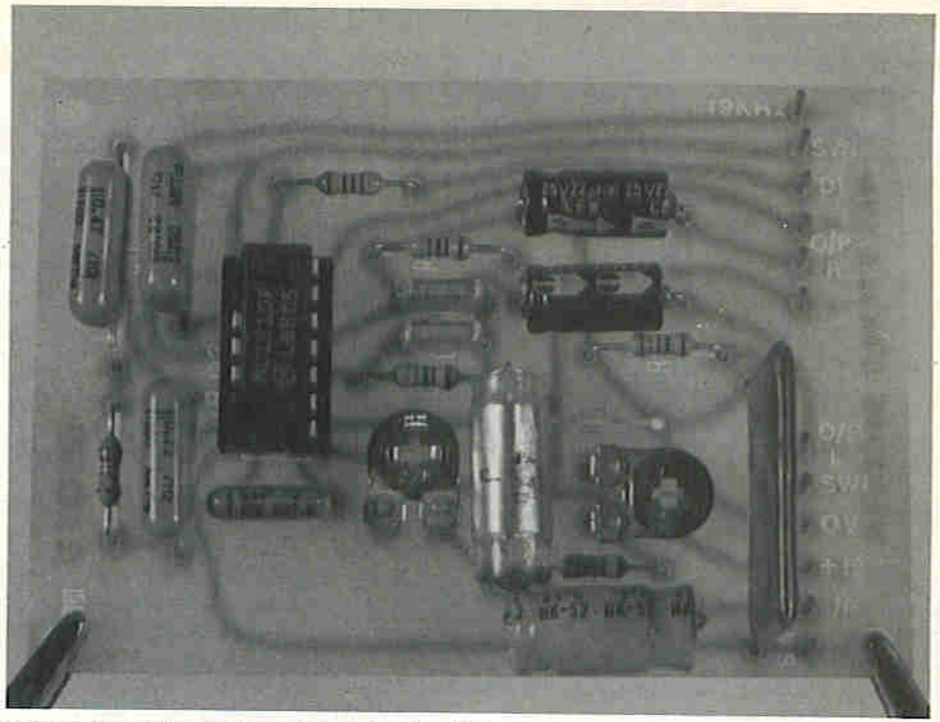
Photo 1. The fully assembled stereo decoder PCB.

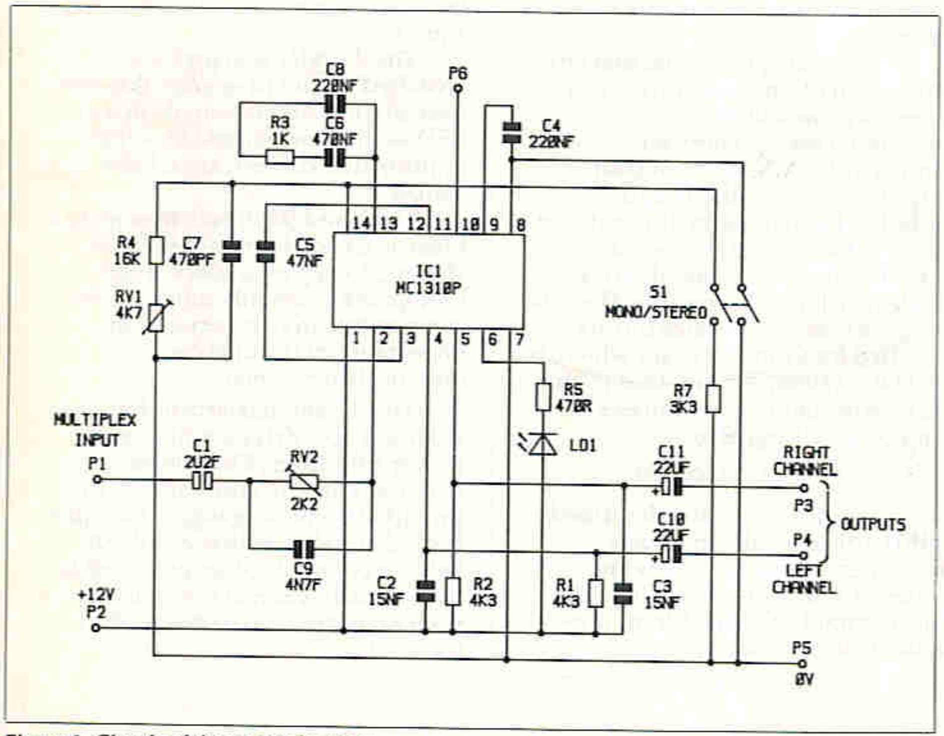

Figure 3. Circuit of the stereo decoder.

The Stereo Power Amplifier

The amount of power output required will depend upon the application but the most probable need will be to convert a small portable f.m. radio to stereo operation. In this case, the audio power output required is quite modest. The TDA2822 stereo amplifier IC described here combines simplicity with good performance and a power output of 1W per channel. The latter is more than adequate for this type of application.

The circuit of the complete stereo amplifier is shown in Figure 4. There

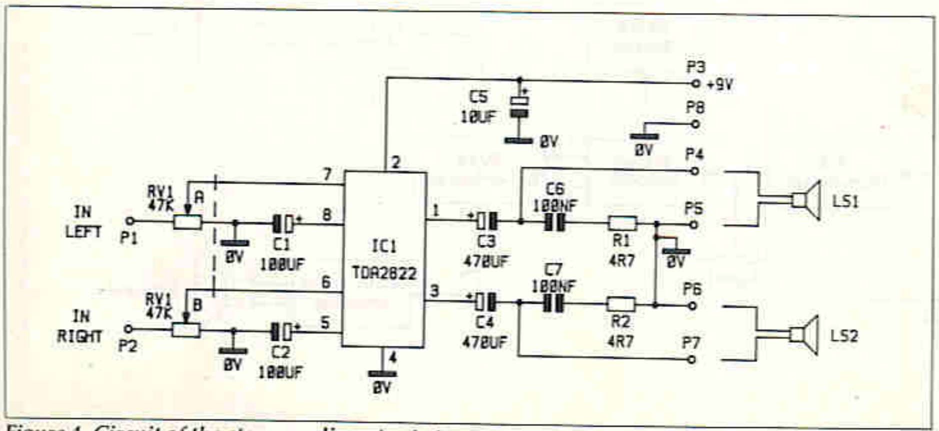

Figure 4. Circuit of the stereo audio output stage.

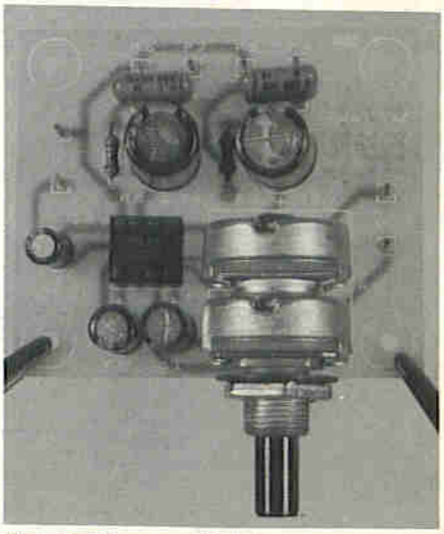
Photo 2. The assembled stereo power output stage showing the simplicity of what is, nonetheless, a very effective design.

are very few components, capacitors from each inverting input to 0V and ganged volume controls, a supply decoupling capacitor, output coupling capacitors and an RC network across each loudspeaker. That's all! With the PCB available for this project, construction is simplicity itself.

The Conversion in Detail

This process can be sub-divided into four stages, as follows:

Receiver Modifications

There are two modifications to make to the receiver, both of them very simple to carry out.

(a) As already explained it is essential to remove the de-emphasis components from the output of the demodulator. It may not be necessary, or even advisable, to remove both of them but the de-emphasis capacitor at least must be removed. Whether the associated resistor is also removed depends upon whether it has any other function. In the specific case of the Maplin f.m. receiver using the TDA7000 IC, the resistor should not be removed since it also acts as the output load for this chip. The two components referred to here are found as a parallel combination (R1 = 22K, C11 = 10nF) connected between Pin 2 of the IC and the 0V line. Therefore, remove C11 only to remove de-emphasis.

(b) The second modification consists of disconnecting the audio output from the demodulator where it feeds the mono audio output stage. This output will now have to go to the stereo decoder instead. It will be carrying the full multiplex signal for the decoder to process. This disconnection is made by the simple expedient of removing the output coupling capacitor, C19, from the f.m. receiver board. Pin 2 of the TDA 7000 will now be connected by an insulated wire link to the input of the decoder board. To avoid any clash of d.c. potentials between the two ICs, the input coupling capacitor on the decoder board has been made a non-polar type. These modifications are shown in Figure 5.

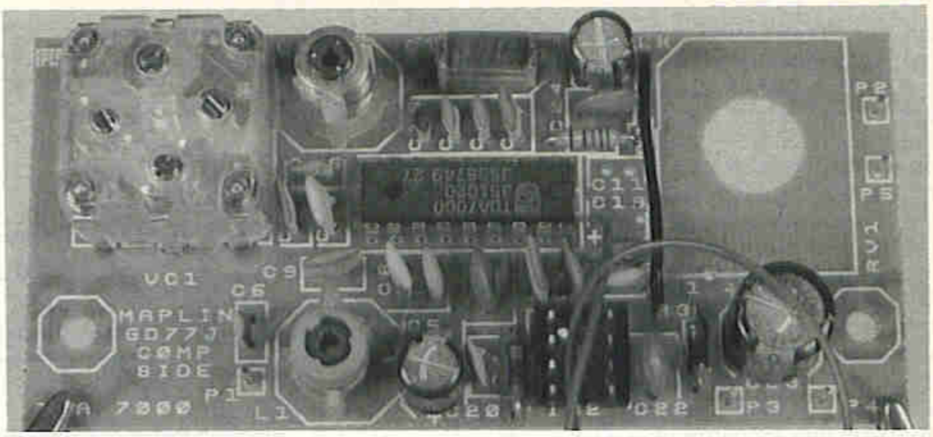

Photo 3. The f.m. radio PCB with modifications described in the text. Note the absence of C11 and C19; the original mono output IC, a TBA820M has also been removed as being redundant. The insulated wire link, carrying the multiplex signal, can also be seen.

If any other f.m. receiver is to be converted, it will be necessary to identify the corresponding components either by inspection or with the aid of a circuit diagram, if one is available. If there is any doubt about whether both de-emphasis components need to be removed, it should be quite safe to remove the capacitor and ignore the resistor.

Building and Setting-up the Decoder

The assembly of this is perfectly straightforward, especially if the available PCB is used. The 'beacon' LED is mounted on the front panel and the connections to it from the decoder PCB made with a 'twisted pair' of fine equipment wire.

Having assembled all of the components onto the PCB and visually checked the board for any errors, the next stage is to connect 12V to it and adjust the frequency of the internal oscillator. This actually runs at 76kHz but, by a pair of

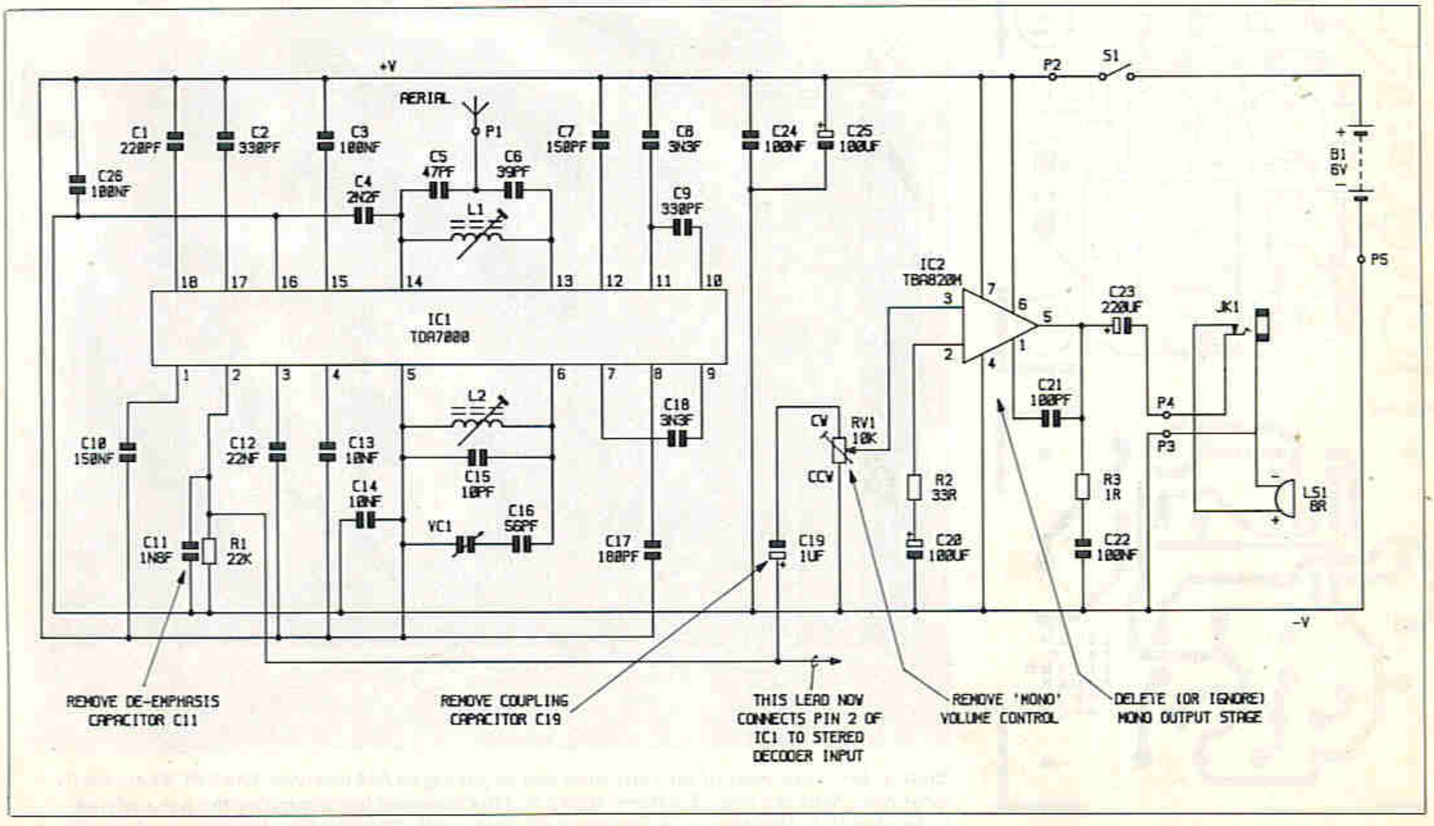

REMOVE DE-EMPHASIS CAPACITOR C11

REMOVE COUPLING CAPACITOR C19

THIS LEAD NOW CONNECTS PIN 2 OF IC1 TO STEREO DECODER INPUT

REMOVE 'MONO' VOLUME CONTROL

DELETE (OR IGNORE) MONO OUTPUT STAGE

Figure 5. Modifications to the Maplin f.m. receiver for stereo operation.

dividers, is reduced to the magic figure of 19kHz. This latter frequency is to be found at pin 10 of the IC. The ideal way of setting it up is with a frequency counter connected to this pin; merely rotate RV1 until the counter reads 19kHz. Failing the availability of this useful piece of test equipment, the job will have to be done with an actual 'off air' signal. This is done as follows. With power on both the receiver and decoder, the receiver should be tuned to a known stereo broadcast. RV1 should then be adjusted until the beacon lights; careful further adjustment of RV1 should find the maximum brightness point for the beacon.

The other preset to be adjusted is RV2 which controls the stereo separation. This will need to be done off-air with a signal in which, as already stated, there is a clear distinction between the desired left and right hand outputs. This will almost certainly mean using music and the adjustment is purely subjective. Rotate the control until the stereo effect sounds best and leave it at that.

The Stereo Audio Output Stage

A PCB is also available for this part of the design, see Figure 6 for layout details. The on-board component count is minimal and there should be little chance of error. The volume control is mounted on the stereo amplifier PCB itself, providing a convenient way of securing this PCB. However, it can be mounted off the board if this is preferred. It may be possible to remove the original mono volume control and replace it physically with the new dual-gang stereo version – space permitting. How feasible this is will depend upon the physical design of the original mono receiver.

With regard to the speakers, any impedance in the range 4-16Ω is suitable. Since the power output capability on each channel is 1W with a 9V supply, the 6V supply specified here (purely for convenience, as explained later) will limit the power output so that very small speakers are unlikely to be overdriven.

Power Supplies

There is some conflict between the various sections of the receiver as far as supply voltages are concerned. Both the Maplin f.m. receiver and the audio output stage require lower voltages than the decoder stage. The latter needs 12V but the other two will work happily with half of this. Thus, to cater for these needs, a 12V centre-tapped battery arrangement has been adopted, the wiring of which is shown in Figure 7. Unfortunately, there is no convenient size of 6V battery available, so the 6V battery holder recommended for the f.m. receiver (holding four AA size cells) has been doubled up, the two battery packs being connected in series. The 'lowest connection' becomes the 0V line, the junction of the two battery packs feeds the f.m. 'front-end' and the output stage, while the top connection supplies the full 12V to the decoder.

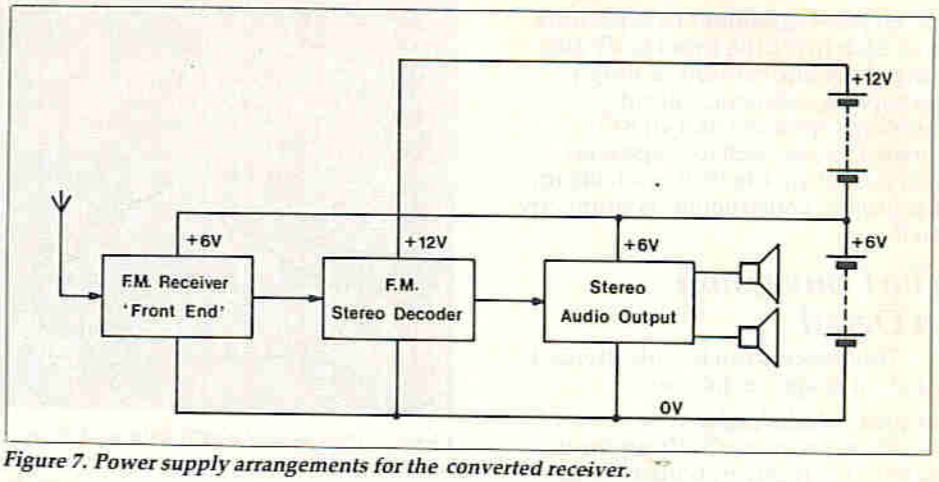

Figure 7. Power supply arrangements for the converted receiver.

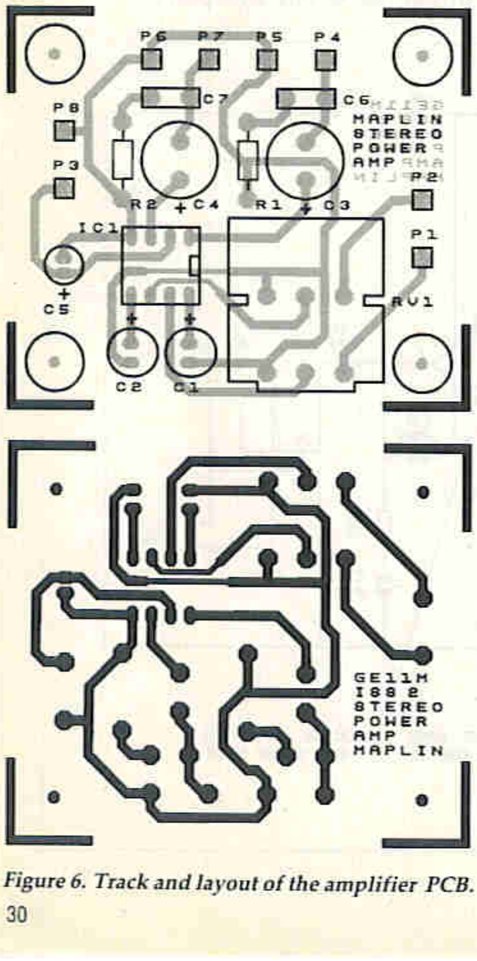

Figure 6. Track and layout of the amplifier PCB.

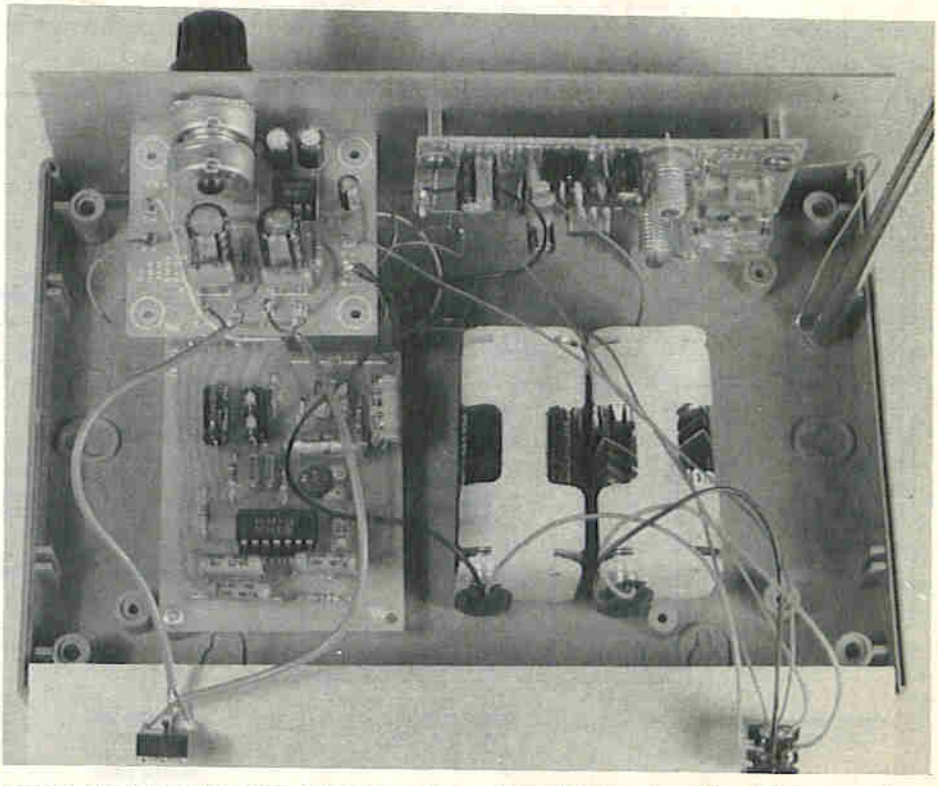

Photo 4. Birds eye view of the converted and re-packaged FM receiver. The 3 PCBs are easily identified. Note the two 6V battery packs and the screened leads carrying the left and right audio signals to the stereo jack socket on the rear panel. The on/off switch has also been fitted on the back in this instance.

The Aerial

Satisfactory operation of the stereo decoder demands adequate signal pick-up. This depends upon the proximity of the listener to the transmitter and upon the aerial used. In some areas a strong signal can be brought in on the proverbial 'piece of wet string'. In others a proper f.m. aerial, loft or roof mounted will be needed. If the signal strength is insufficient the beacon will not light up even though the audio output (in mono!) sounds loud and clear. The short whip aerial used may well be adequate for local FM radio stations but not so for regional transmitters. It is a matter for individual experimentation.

Photo 5. The completed conversion with whip aerial extended and using the Personal Speaker Set, available from Maplin as item YP64U.

FM RECEIVER PARTS LIST

RESISTORS: All 0.6W 1% Metal Film			
R1	22k	1	(M22K)
CAPACITORS			
C1	220pF Ceramic	1	(WX60Q)
C2,9	330pF Ceramic	2	(WX62S)
C3,24,26	100nF Minidisc	3	(YR75S)
C4	2n2F Ceramic	1	(WX72P)
C5	47pF Ceramic	1	(WX52G)
C6	39pF Ceramic	1	(WX51F)
C7	150pF Ceramic	1	(WX58N)
C8,18	3n3F Ceramic	2	(WX74R)
C10	150nF Polylayer	1	(WW43W)
C12	22nF Ceramic	1	(WX78K)
C13,14	10nF Ceramic	2	(WX77J)
C15	10pF Ceramic	1	(WX44X)
C16	56pF Ceramic	1	(WX53H)
C17	180pF Ceramic	1	(WX59P)
C25	100μF 10V PC Electrolytic	1	(FF10L)
VC1	AM/FM Min Tuner Cap	1	(FT79L)
SEMICONDUCTORS			
IC1	TDA7000	1	(YH87U)
MISCELLANEOUS			
L1	RF Coil 0.066μH	1	(UF63T)
L2	RF Coil 0.450μH	1	(UF69A)
S1	Toggle Switch	1	(FH39N)
	PC Board	1	(GD77J)
	Control Knob K14B	2	(FK39N)
	Veropins 2145	1 Pkt	(FL24B)
	Aerial 6-section	1	(RK49D)
	Battery Holder 6V	2	(HF29G)
	Battery clip (PP3) Type	2	(HF28F)
	RF Coil Trim Tool	1	(UF70M)

STEREO DECODER PARTS LIST

RESISTORS: All 0.6W 1% Metal Film			
R1,2	4k3	2	(M4K3)
R3	1k	1	(M1K)
R4	16k	1	(M16K)
R5	470Ω	1	(M470R)
R6	Not Fitted		
R7	3k3	1	(M3K3)
RV1	4k7 Sub-min Hor Preset	1	(UH02C)
RV2	2k2 Sub-min Hor Preset	1	(UH01B)
CAPACITORS			
C1	2μ2F Reversolytic	1	(FB01B)
C2,3	15nF Polylayer	2	(WW31J)
C4,8	220nF Polyester	2	(BX78K)
C5	47nF Polyester	1	(BX74R)
C6	470nF Polyester	1	(BX80B)
C7	470pF Mica	1	(WX21X)
C9	4700pF Polystyrene	1	(BX39N)
C10,11	22μF 25V Axial Electrolytic	2	(FB30H)
SEMICONDUCTORS			
IC1	MC1310P	1	(QH45Y)
D1	LED Red	1	(WL27E)
MISCELLANEOUS			
S1	Toggle Switch	1	(FH00A)
	PCB	1	(BR03D)

STEREO OUTPUT PARTS LIST

RESISTORS: All 0.6W 1% Metal Film			
R1,2	4Ω7	2	(M4R7)
RV1	47k Dual LOG Pot	1	(FX11M)
CAPACITORS			
C1,2	100μF 10V PC Electrolytic	2	(FF10L)
C3,4	470μF 16V PC Electrolytic	2	(FF15R)
C5	10μF 50V PC Electrolytic	1	(FF04E)
C6,7	100nF Polyester	2	(BX76H)
SEMICONDUCTORS			
IC1	TDA2822	1	(UJ38R)
MISCELLANEOUS			
	PCB	1	(GE11M)
	8-Pin DIL Socket	1	(BL17T)
	Pin 2145	1 Pkt	(FL24B)

The following part is available,
but is not shown in our 1989 catalogue:
Order As GE11M (Stereo Output PCB)
Price £1.98

THE EPP-1 EPROM PROGRAMMER

- ★ Programs EPROMs from 2K to 64K memory size
- ★ Can handle CMOS EPROMs and EEPROMs
- ★ Can be connected to any computer with an RS232 port and terminal software
- ★ Has its own 240V AC 50Hz mains power supply

Reviewed by Martin Dearman

EPROM's or Erasable Programmable Read Only Memories to give them their full title, are useful devices for software engineers and enthusiasts alike. The reason for this is that they are 'reprogrammable'. Software can be written and programmed (burnt) into an EPROM then tested; if any software errors (bugs) are found then the EPROM can be erased, by using an ultra-violet light with the correct wavelength of 253.7nm and then the EPROM can be programmed again with software that has had the bugs eliminated. ROM's (Read Only Memories) and EPROM's in particular, are essential to the home constructor who is building a microprocessor system, because part of the system memory has to be non-volatile, i.e. the memory retains its contents even with the power off, as ROM's and EPROM's are both non-volatile memory devices. Part of the microprocessor memory has to be non- volatile because on power up, a microprocessor will expect to find instructions telling it what to do, i.e. a program. The other main type of memory is RAM (Random Access Memory), or read and write memory to give it a title that describes its function better. RAM could not be used in place of ROM though, as there would not be any instructions stored and it would forget everything when the power was removed. So it can be seen that EPROM's and EPROM programmers are essential items of equipment for software development by amateurs and professional users alike. The EPP-1 EPROM Programmer, programs all current EPROM's in the 2716 to 27512 range and one EEPROM (Electrically Erasable Programmable Read Only Memory) type, the 2864. It has an easy to use zero insertion force (ZIF) socket fitted thus removing the possibility of damaging the EPROM's during insertion and extraction. It has its own 240VAC 50Hz mains power supply.

The EPP-1.

```
10 *FX 2,2
20 *FX 7,4
30 *FX 8,4
40 *FX 229,1
50 MODE 3
60 OSBYTE=&FFF4
70 REPEAT
80 A%=138:X%=2
90 IF ADVAL(-1)>0 AND
ADVAL(-3)>0 THEN Y%=GET:CALL
OSBYTE
100 *FX 2,1
110 IF ADVAL(-2)>0 THEN VDU GET
120 *FX 2,2
130 UNTIL FALSE
```

Listing 1. Simple BBC basic program for use with the EPP-1.

Programming

The 5.25 inch software disk supplied with the EPP-1 is for use with IBM PC's and compatibles, but EPP-1 will equally work with computers that have an RS232 port and terminal software. See Listing 1 for a simple BBC basic program that will allow communication with the EPP-1. Instructions for programming EPROM's are supplied in a booklet with the Programmer and you are required to first load MS-DOS, then insert the disk supplied into the disk drive. The disk contains all files necessary to read and

Manufacturer	EPROM type	2 hex byte code number
SGS	2716	9E21
Intel	2716	9E21
Intel	2732A	9E12
SGS	2764A	8503
Intel	27128A	C544
TI	27C256	B945
Hitachi	27512	B946

Table 1. Extract from the Devices.Txt file.

Example
:LLAAAA00DDDD......DDSS
: = Start of line indicator
LL = Number of data bytes in hex
AA = Address of first byte in the string
DD = Data bytes
SS = Checksum on entire string

Listing 2. Example source code file.

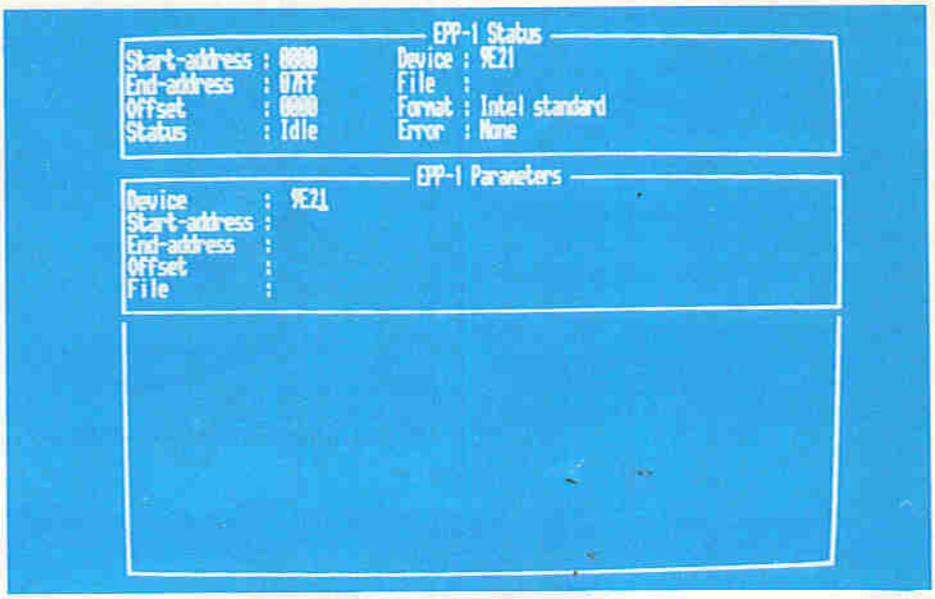

```
                         EPP-1 Status
Start-address : 0000        Device : 9E21
End-address   : 07FF        File   :
Offset        : 0000        Format : Intel standard
Status        : Idle        Error  : None
                         EPP-1 Parameters
Device        :  9E21
Start-address :
End-address   :
Offset        :
File          :
```

Photo 1. Select option mode.

program EPROM's. EPP- 1 requires a two hexadecimal (hex) byte number to be sent, to inform it of the type of EPROM to be programmed. This two hex byte number can be found by printing on the screen (or using a printer) the text file DEVICES.TXT on the disk, and determine the code to be sent to the Programmer by looking down the list of manufacturers EPROMs displayed on the screen or on the printout (see Table 1 for an extract from this text file). For example, the procedure for programming SGS 2716 (2K byte) and Intel 27128A (16K byte) EPROM's, is as follows:

Select the EPROM type code, 9E21 for 2716 and C544 for the 27128A (the meaning of the two hex byte number selection code will be explained later in this article). Now load EPPCOM.EXE, the program which controls the EPP-1 Programmer. Send the two hex byte number code to the EPP-1 by typing this code in the select option mode (see Photo 1). Each option can be selected by using the cursor and enter keys which moves a selection bar around the screen. Now push return three times to skip over the start address, end address and offset address selectors, and type in the source code filename. For example, an imaginary source code file TEST2K.HEX for the 2716 EPROM! Next the file format will have to be selected and in this case I decided to use the 8 bit Intel standard. There are 3 other code formats that can be selected, these are Four Packed Code (FPC), Motorola and Tektronix. See Listing 2 for an example of a source code file in 8 bit Intel standard format. Next the MACRO option mode will have to be selected. Use test EPROM option to determine if the EPROM is blank (empty), if it is then no error will have occurred. Select the write option mode to program the EPROM, if the device is correctly programmed then it will take 29 seconds to program the 2716 and 3 minutes 40 seconds approximately for the 27128A device. Use verify to see if the EPROM contains the correct information.

View of power and serial connectors.

Other Features of the EPP-1

The EPP-1 uses a total of 9 commands, which can be issued using a terminal program, and are as follows:

P – start address
L – end address
O – offset address
T – test target
R – upload from target
W – download to target
V – verify target contents
G – get result code word
S – select EPROM type

Command R would read an EPROM, fitted in the EPP-1, into a file that has been designated in the select option mode, i.e. TEST2K.HEX in Intel standard format. Command G returns a two byte hex number, if any of these bits are set (logic 1), then an error has occurred. The meaning of these bits are as follows:

Bit 0 – bit can't be programmed
Bit 1 – illegal bit error
Bit 2 – hex digit error
Bit 3 – address range error
Bit 4 – command error
Bit 5 – hex check error
Bit 6 – abort flag
Bit 7 – not empty flag
Bit 8 – FPC format error
Bit 9 – input overflow error
Bits 10-15 are not used

Command S is a 16 bit number which is sent from the computer to the EPP-1. For example, to select an SGS 2716 EPROM, the 16 bit code is 9E21. This hex number in binary is 1001111000100001 where:

Bits 0-2 select EPROM size (number of pins and memory capacity), 001 is the code for an 2716 EPROM.

Bit 3 is reserved, 0 is the code for OK, and 1 is the code for invalid.

Bits 4-5 select the program voltage, 10 is the code for 25V.

Bit 6 selects Vcc (the supply voltage to the EPROM), 0 is the code for 5V.

Bit 7 is also reserved, and has the same meaning as for bit 3.

Bits 8-11 select the maximum programming time per memory location (this depends on the selection code with the 3 bits, bits 12-14), 1110 is the code for 50ms.

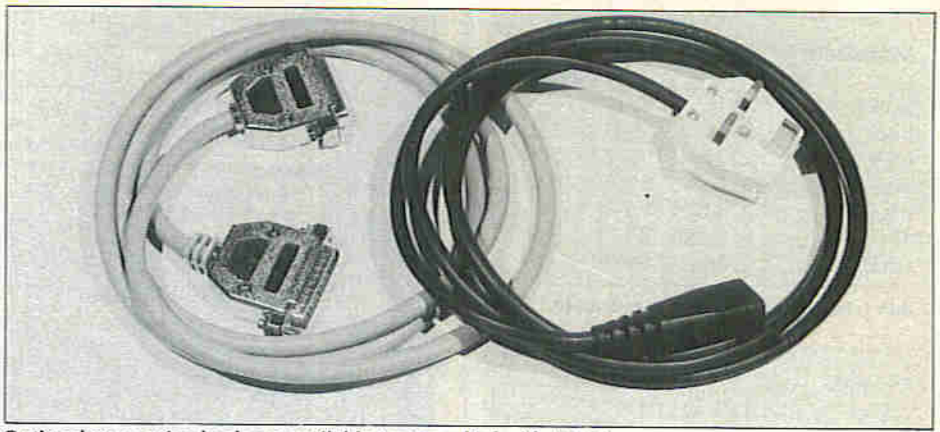

Optional connection leads are available (not supplied with EPP-1).

Specification

The dimensions of the EPP-1 are 65mm(H) x 103mm(W) x 168mm(L). Weight 860 grammes. The RS232 interface works at 1200 baud only, with 1 start and stop bit, 8 data bits, using RTS and CTS handshaking. The EPROM types supported are the 2716, 27C16, 2732, 2732A, 27C32, 2764, 2764A, 27C64, 27128, 27128A, 27C128, 27256, 27256A, 27C256, 27512 and 27C512. Also one EEPROM type is supported, the 2864. Computer and mains connecting leads are not supplied with the Programmer and must be purchased separately. Suitable items are available from Maplin, stock number for a mains lead is BW99H, a 13A mains plug is RW67X, the serial lead to connect the EPP-1 to a computer is JC13P. Details for the RS232 connection are:

Host computer	EPP-1
Pin 1 = Shield	Shield = Pin 1
Pin 2 = Tx(o/p)	Rx(i/p) = Pin 2
Pin 3 = Rx(i/p)	Tx(o/p) = Pin 3
Pin 4 = RTS(o/p)	CTS(i/p) = Pin 4
Pin 5 = CTS(i/p)	CTS(i/p) = Pin 5
Pin 6 = input	High = Pin 6
Pin 7 = ground	Ground = Pin 7

EPP-1 is supplied with a manual and software.

Bits 12-14 select program factor, 001 is the code for a program factor of 1, to explain how this works I will use an example. Say that it took four 1ms pulses to correctly program a memory location, then an additional four 1ms pulses will be applied for a program factor of 1, if the program factor had been 2 then there would have been an additional eight 1ms pulses applied. If the program factor had been 0, then this is the dumb setting, which means that the value set by bits 8-11, the program time for each memory location is fifty 1ms pulses (as set by bits 8-11, with the value 1110), regardless of whether it took for example only five 1ms pulses to program correctly.

Bit 15 selects FF skip, 1 is the code for FF skip active, which means that any FF values found in the source file will not be programmed into the EPROM, this makes sense as a blank location in an EPROM is at the value of FF, i.e. all 8 bits set (11111111), so the EPROM location will be at the correct value already, and it won't need to be further programmed, thus speeding up the programming time.

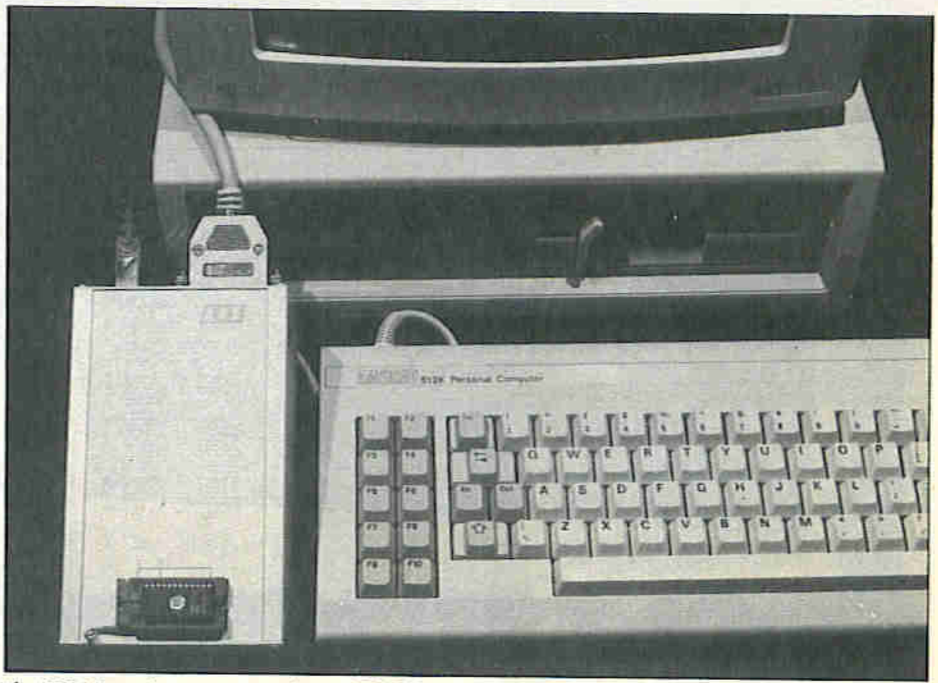

The EPP-1 in action, programming an EPROM.

'Hello Who's Calling?'

Bell's first telephone

by J. K. Hearfield   Part 4

The First One-piece Telephone

The 'microtelephone' introduced in 1929 marked a major step towards making the telephone more user-friendly. For the first time both the receiver and the microphone were incorporated in a handset, so a telephone user was no longer forced to hold the 'candlestick' in one hand and the receiver in the other. This advance was made possible by a new design of microphone which would work well in any position; earlier microphones had to be kept more or less vertical to work at all. The bell-set was still housed in a separate box on the wall, and the obvious next step was to include it within the telephone case.

The new instrument, stylishly called the Telephone No. 330, came into general use around the end of the 1930s. It was built to last, with a sturdy case moulded from quarter-inch-thick plastic. The case was black, naturally, though other colours were available if the customer insisted; red handsets came to be used for priority instruments, and green handsets for scramblers. The components (apart from the dial) were bolted to a steel chassis, which in turn was bolted into the case. The handset alone weighed almost as much as

Photo 1. The No. 330.

a complete modern telephone, whilst the whole instrument weighed a massive 5lb (over 2kg). The design was very successful – the Telephone No. 330 was the standard UK instrument for twenty years, and some are still in use today.

Circuit Diagram

The complete circuit diagram is shown in Figure 1, drawn in the style of the time, and redrawn using modern symbols in Figure 2. It appears to use remarkably few components: the microphone, reciever and bell, the dial, two switches, a transformer, and a couple of resistors and capacitors. In fact, this telephone represents a most igenious design in which practically every component does two or more separate jobs.

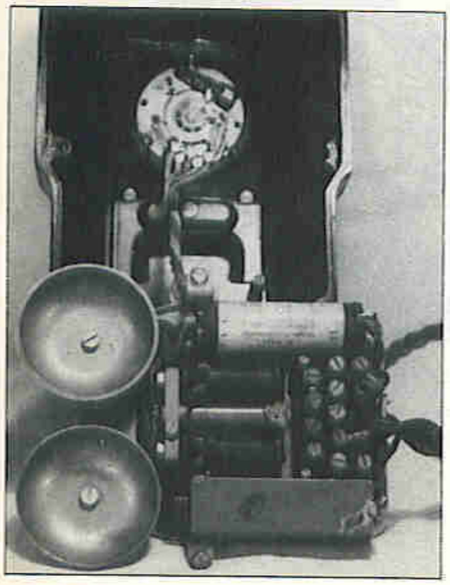

Photo 2. Inside the receiver.

DC Loop

The exchange must be able to detect that the telephone is in use, or 'off-hook', so that it may be connected to circuitry designed to process signalling information (in this case, dial pulses), then to a transmission bridge, and so on. The telephone needs at least 25mA to work properly, and this current is drawn from the central exchange battery, so the off-hook condition is detected by simply inserting a suitable relay at the exchange in series with the line.

It is perhaps worth emphasising that the resistance of the telephone is not the same as its impedance. The telephone's impedance should match that of the line so that maximum speech power is transferred in and out, but its resistance should be as small as possible. Given a worst-case exchange battery voltage of (say) 43V, the necessary 25mA will flow only if the total circuit resistance is 1700 ohms or less. The exchange itself needs 400 ohms, leaving just 1300 ohms for the telephone and cabling. So the smaller the resistance of the telephone, the larger the resistance of the cable can be. A larger resistance implies a thinner cable, and since copper cable is very expensive, it should be as thin as possible.

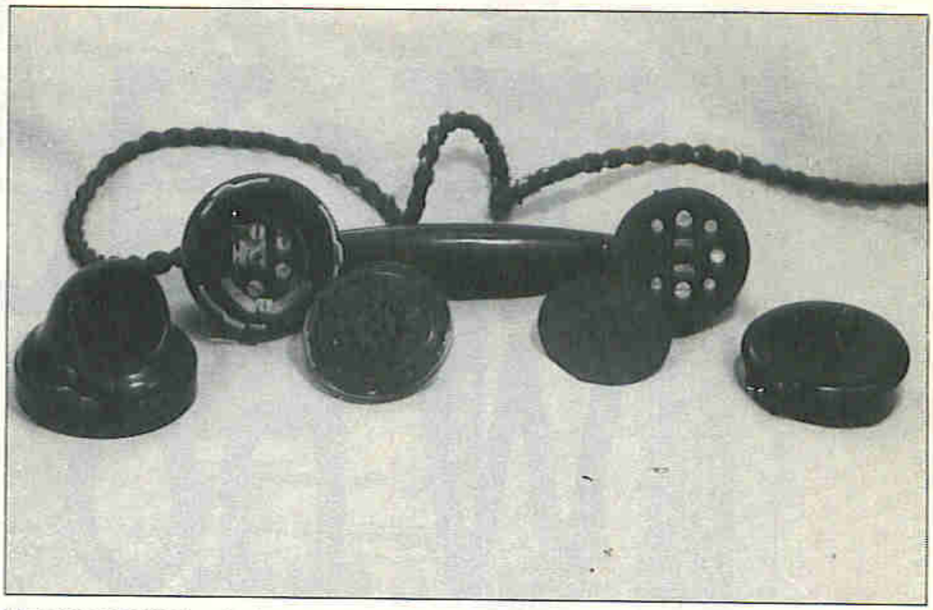

Photo 3. Inside the handset.

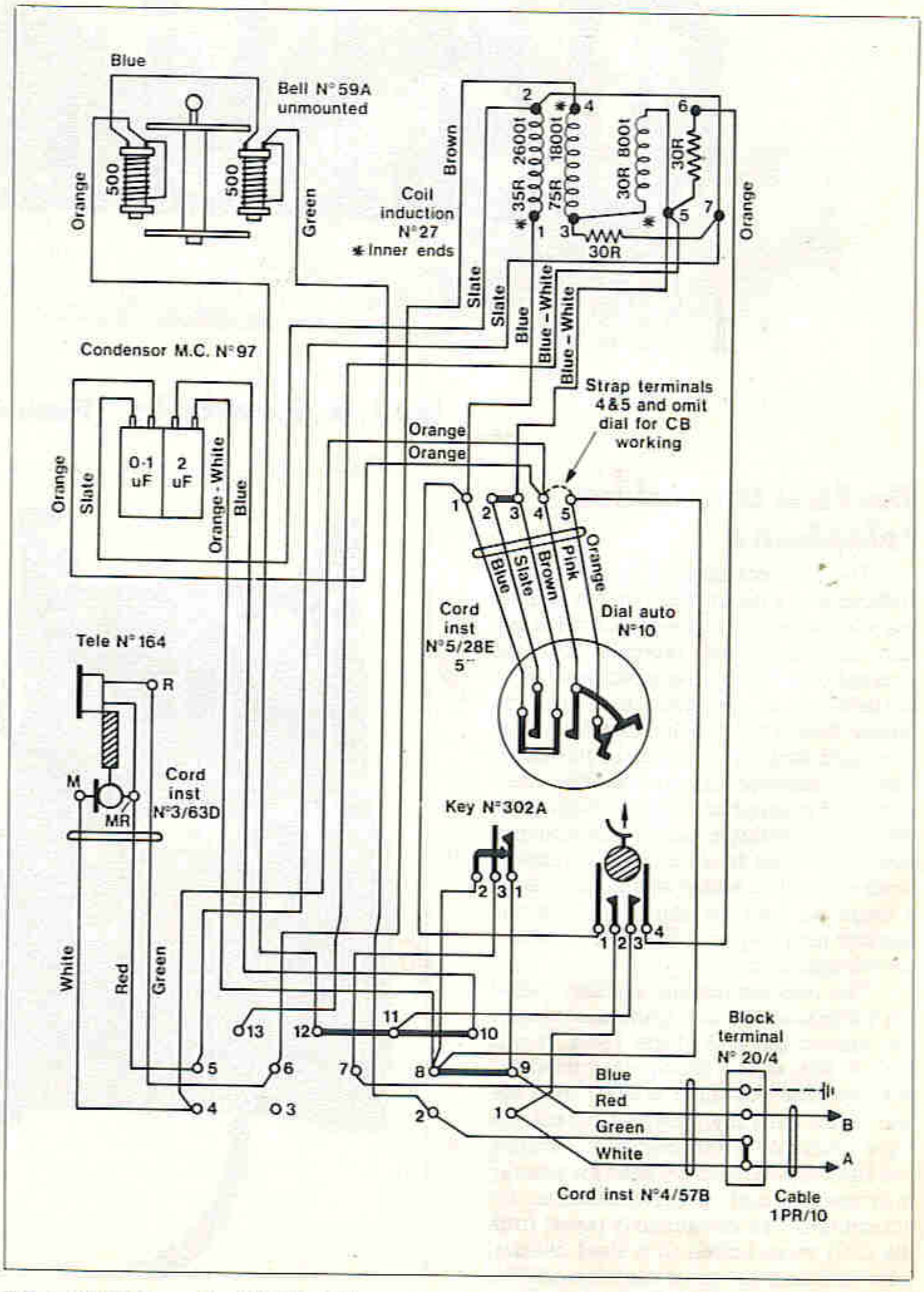

Figure 1. Telephone No. 330 (Mark 1).

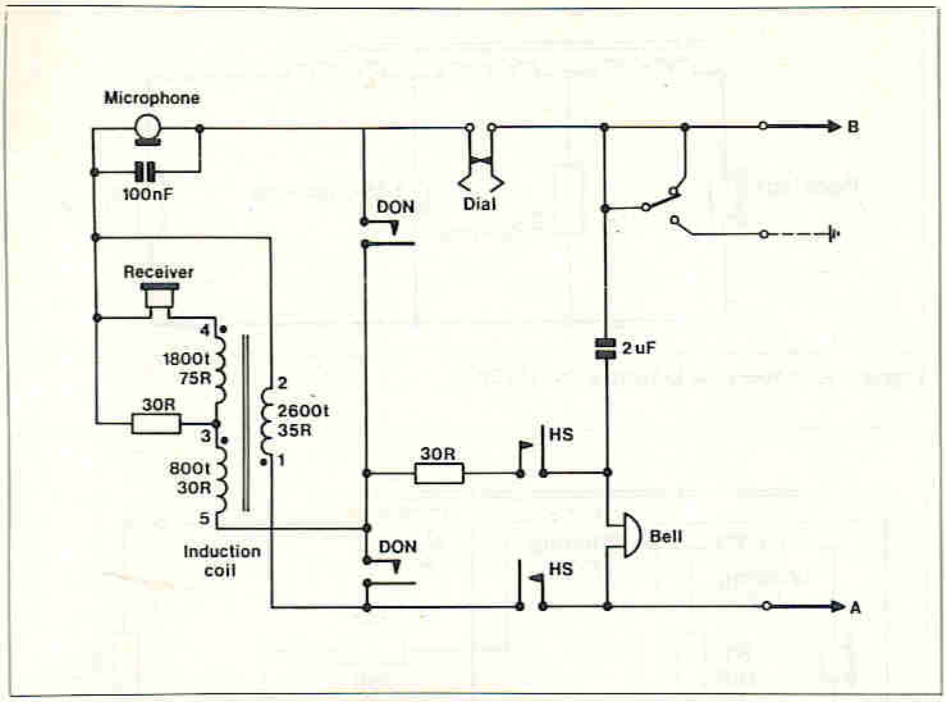

Figure 2. Telephone No. 330, simplified schematic. HS = hookswitch, contacts closed when telephone off-hook. DON = dial off-normal, contacts closed when dial moved from its rest position.

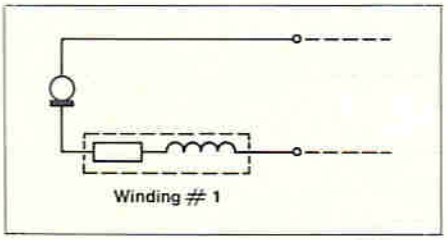

Figure 3. Telephone No. 330, DC path when off-hook.

The telephone's holding loop is made up of the low-resistance microphone in series with one winding of the induction coil, as illustrated in Figure 3. The impedance of the winding is sufficiently high at audio frequencies to prevent the microphone's resistance from shunting the circuit.

Dialling Circuit

The telephone signals to the exchange by momentarily open-circuiting the holding loop a number of times in succession by means of the rotary dial (explained in the last article). The exchange equipment counts the number of interruptions and interprets this number as routing information. It is in the interests of both the subscriber and the telephone operating company that dialling should be completed quickly, and this of course implies that the dial pulses should be short and frequent. For this to be possible, the cable down which the pulses are transmitted must be low-resistance and low-capacitance. In practice, the cable has resistance and capacitance figures of typically 170 ohms and 50nF per kilometer (see Figure 4) and behaves like a low-pass filter with a cut-off frequency of a few hundred Hertz. The square edges of a dial pulse leaving the telephone become smeared and rounded by the time they reach the exchange, and this distortion limits the pulse repetition rate to about 10Hz. But to achieve even 10Hz it is necessary that the telephone itself does not distort the pulses, and so special contacts are built into the dial assembly (known as the Dial Off-Normal, or DON contacts) that operate to short-circuit the transmission components during dialling. The dialling circuit for the Telephone No. 330 is shown in Figure 5. Apart from the hookswitch and dial contacts, the only other components are R2 and C, which are switched across the bell during dialling to prevent it from 'tinkling' as it responds to the pulses.

Transmission Circuit

The transmission circuit is used only when the telephone is off-hook and not in dialling mode. The complete circuit diagram can therefore be greatly simplifed to highlight the transmission components by ignoring the open-circuit DON contacts and drawing the hookswitch and dial contacts as short-circuits. The result is shown in Figure 6, in which the impedance of the network to which the telephone is connected is represented by the impedance Z_{LINE}.

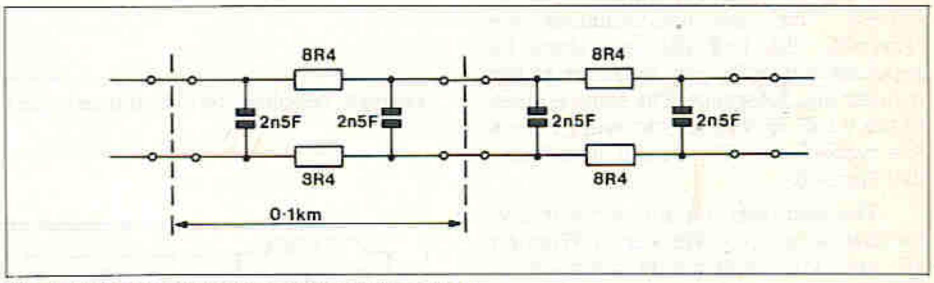

Figure 4. Approximate model of local-line cable.

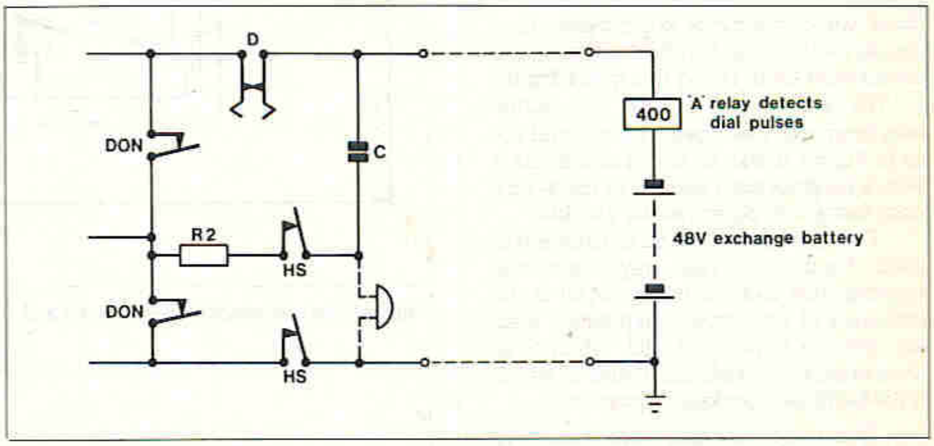

Figure 5. Telephone No. 330, dialling circuit. HS = hookswitch, DON = dial off-normal contacts all closed.

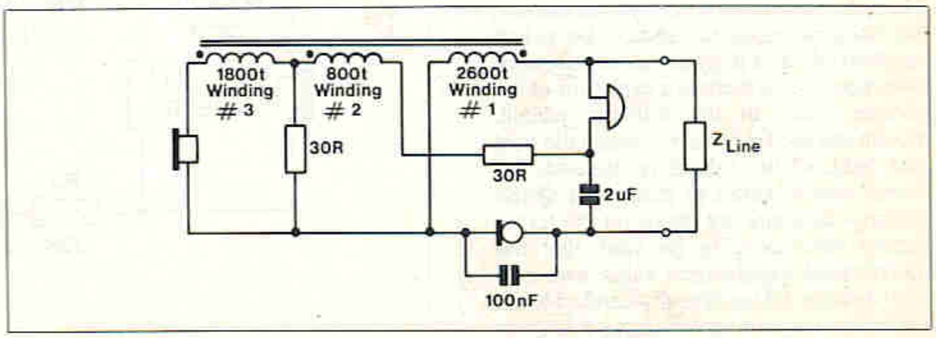

Figure 6. Telephone No. 330, speech circuit components.

Central to the transmission circuit is the transformer. Physically, it consists of a cylindrical soft-iron core about 3 inches long with three separate windings and two additional non-inducting 30 ohm windings (because it was cheaper and much more reliable at that time to do this rather than use external carbon resistors). This key component not only handles the impedance matching of the microphone to the line, and the line to the receiver, but also minimises local sidetones (that is, coupling between the microphone and receiver through the telephone circuitry). It has the imposing title of the Anti-Sidetone Induction Coil, or ASTIC, and I described its operation in the last article. For the benefit of those whose copy of the last issue is now lining the bottom of the parrot's cage, the basic circuit is repeated as Figure 7. It works like this:

When transmitting, energy from the microphone is shared between the line and balance impedances, with no current flowing in the receiver.

When receiving, energy from line is coupled directly to the receiver, with no current flowing in the balance impedance.

To manipulate the basic transmission circuit into the form of Figure 7 is not too difficult. First, the non-essentials are removed. The bell can go, since its impedance at audio frequencies is too big to make any difference. The same applies to the 0.1µF RF bypass capacitor across the microphone. The circuit now looks like Figure 8.

The next step is a little more tricky, because it involves visualising Winding #2 and the components attached to Winding #3 (inside the dotted box in Figure 8) as forming a series circuit. Since these two 'components' are in series, they can be interchanged without affecting the circuit operation. Doing this gives Figure 9. The only reason why the actual telephone was designed as it was and not as in Figure 9 was so that it could use a 3-wire handset cord instead of the 4-wire cord that would otherwise be needed.

Finally, Figure 9 can be rearranged to yield Figure 10. The only difference between this and the basic circuit is the presence of two extra components near the balance impedance; R2, which was used to suppress bell tinkle, and C, which is the bell's DC blocking capacitor.

These components are used to improve the match between the balance impedance and the capacitive lines to which the telephone is connected. Ideally, the balance capacitor should be a few hundred nF, and it would of course have been possible to include a capacitor of the correct value in the balance circuit, though this would have increased the cost and reduced the reliability. Instead, the circuit was adapted to make use of the existing capacitor by choosing the transformer turns ratio to be such that the transformed capacitance value was correct. Resistor R2 is not really needed here, but the price paid for including it is quite small. When transmitting, see Figure 11a,

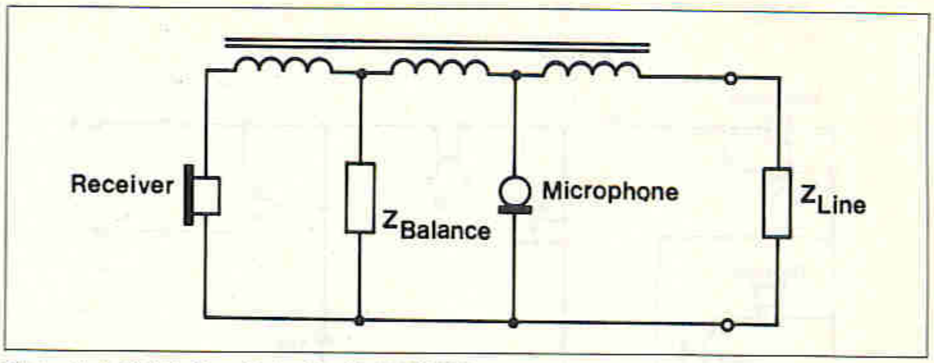

Figure 7. Anti-Side Tone Induction Coil (ASTIC).

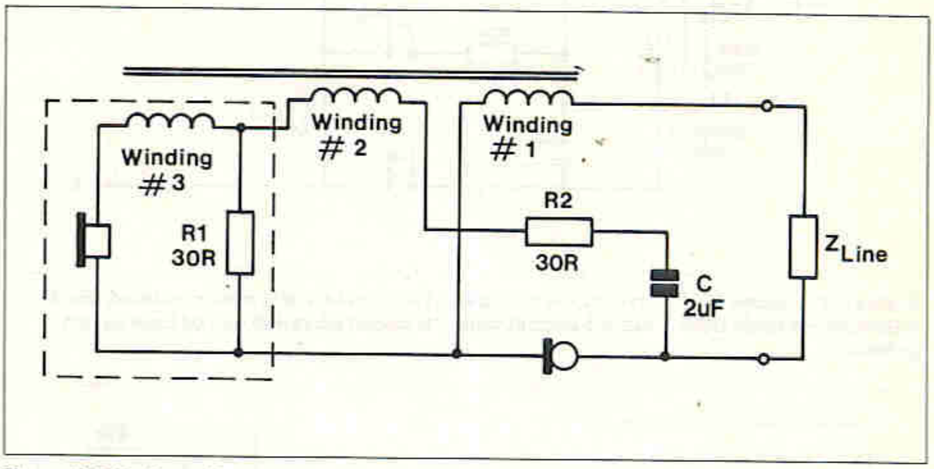

Figure 8. Telephone No. 330, transmission circuit.

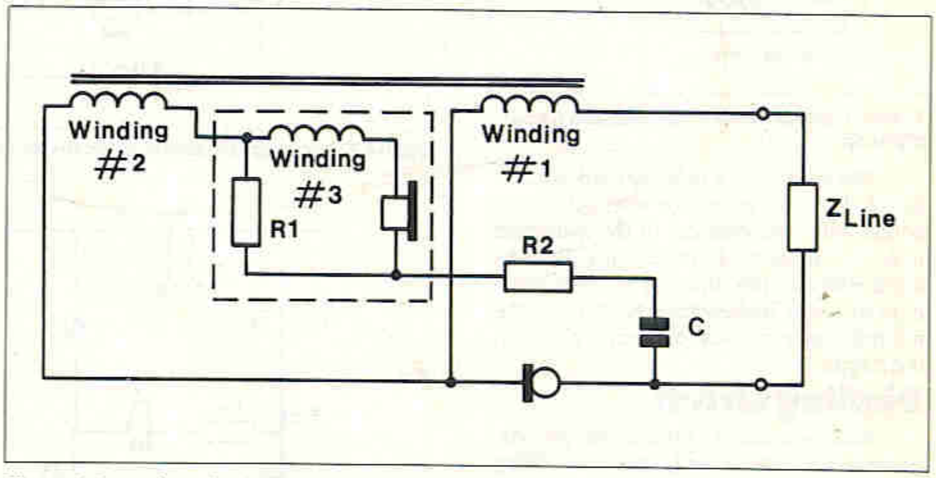

Figure 9. Interchanging Windings #2 and #3 does not affect circuit operation.

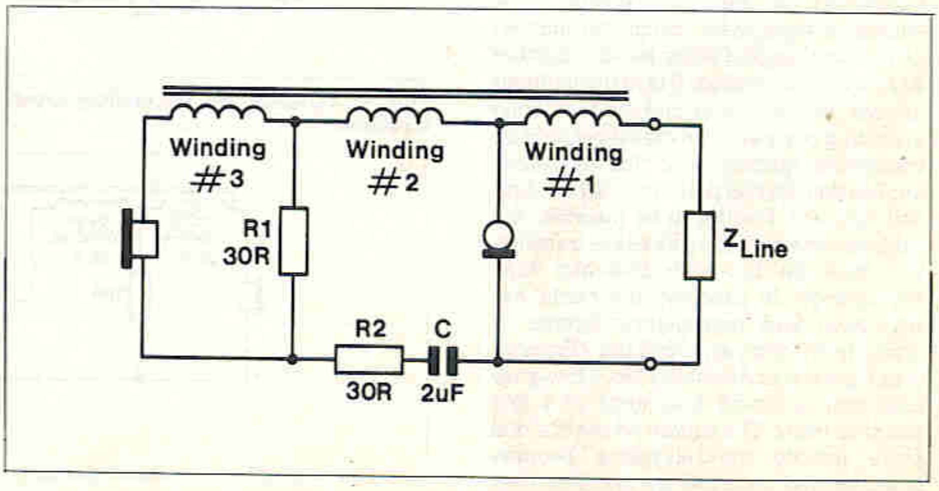

Figure 10. Redrawn showing the split balance impedance.

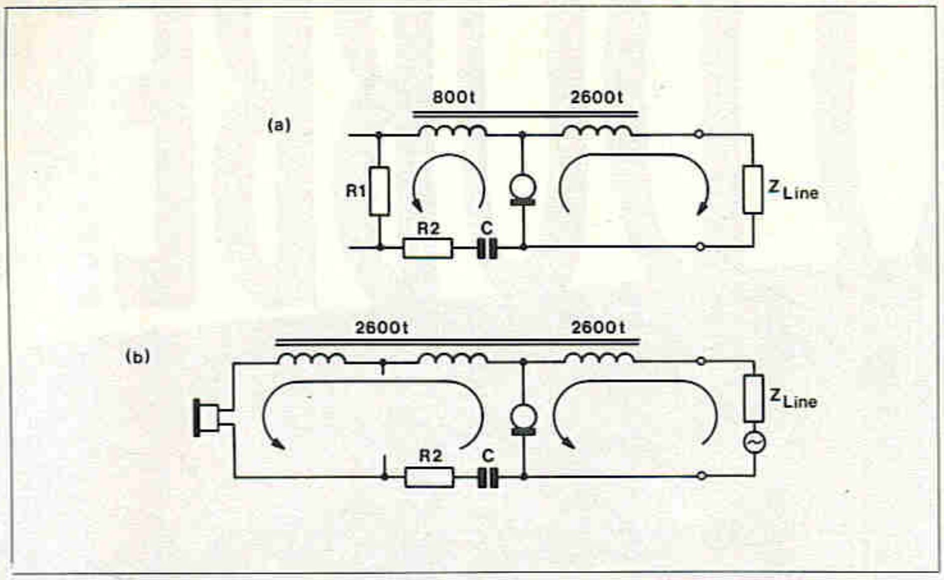

Figure 11. (a) Telephone transmitting, no current in receiver. (b) Telephone receiving, no current in R1.

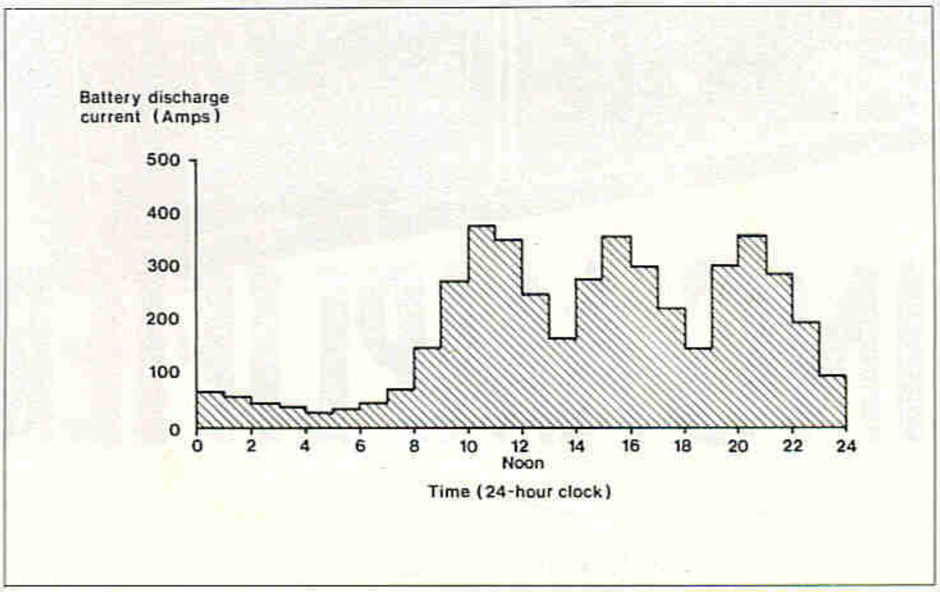

Figure 12. Exchange traffic following the introduction of cheap off-peak calling.

the balance impedance consists of R1, R2 and C (plus the resistance of Winding #2), and this together with the transformer turns ratio is chosen to give zero sidetone – that is, no current flowing in the receiver. When receiving, see Figure 11b, no current flows in R1, and although some power is wasted in R2, the receiver impedance is so much larger than R2 that the loss is not significant.

Incidentally, capacitor C serves one other purpose too; it prevents DC from flowing through the receiver. Unlike early receivers, in which the line current was used to power an electromagnet, the receiver used in this telephone employs a permanent magnet. Any stray current in the receiver coils would reduce its sensitivity by altering the magnet's effective flux.

RF Pickup

In a design where the bell DC-blocking capacitor is used to perform two other jobs as well, it seems a little odd that the designer should have felt it necessary to include another capacitor with no other function than to bypass the microphone. In fact, an RF bypass capacitor is essential with carbon-granule microphones. They tend to behave like crystal detectors; in conjunction with the aerial formed by the handset cord and the low-pass filtering inherent in the ASTIC, telephones based on carbon microphones can act as crude but workable radio receivers.

The telephone network had actually been used officially for the broadcasting of speech, music and church services in the early 1900s. The Electrophone Company sold to its subscribers the opportunity to hear public performances in the privacy and comfort of their own homes. Using existing line plant and specially-designed equipment that allowed up to eight people to listen simultaneously, the service was one of the earliest forms of cable broadcasting. It was never very popular, perhaps because the transducer technology of the time was just not good enough. When regular commercial broadcasting began, and peope began to complain that the quality of their telephone calls was greatly inferior to that of radio broadcasts, it did the GPO little good to point out (as they did) that the BBC could afford to spend large amounts of money on their microphones simply because they owned so few of them. A telephone service offering high-quality transmission would have to wait until really low-cost high-quality transducers became available.

Cheap-rate Calls

In the meantime, the GPO decided that telephone users would perhaps make more use of the service if they were given some financial incentive to do so. Expensive exchange and line plant was being installed all over the country, sized to handle the peak traffic that occurred mid-morning and just after lunch during working days. This meant that for most of the day the equipment was lying idle and earning no revenue. So in 1934 it was announced that from Monday October 1st it would be possible to make trunk calls to anywhere in the UK for just one shilling (5p) if the call were placed after 7pm.

The managers at the London Trunk Centre arranged for the usual necessary routine maintenance work to be done later in the night, but nobody expected the huge surge in demand that actually appeared. The switchboards were ablaze with light, and within minutes it was clear that the system would not be able to cope. The current drawn from the exchange battery (Figure 12) illustrates that by 8pm that evening the traffic was as heavy as in either of the daytime peaks. The main problem was not so much the load on the exchange but the desperate shortage of long-distance line plant. Immediate arrangements were made to bring into service every possible line. Private wires, normally used only during business hours were 'borrowed' back, telex lines and test lines were pressed into use, and even cables taken out of service for essential repair work were hastily joined back into the network. All these circuits had to be made accessible to the 300-odd operators at the exchange by Tuesday evening, a mammoth task involving wiring-in relay sets, cabling them to the operator positions (in four separate rooms), bolting new rows of jacks to the operator desks, and labelling the new routes so that the operators could actually find and use them. Every short cut was taken to meet the expected demand.

As things turned out, Tuesday evening was even busier than Monday had been, and it became clear that the high demand was not just a flash in the pan. Engineers and technicians all over the country were working flat out to get new circuits operational, and by the end of the week they had managed to increase the line capacity of the Trunk exchange by some 20,000 miles, or 15%. In other words, a full year's planned increase in circuits had been installed and commissioned in just one week. Who said Civil Servants had an easy life?

VIDEO DUBBER SWITCHING AMPLIFIER

Review by Dave Goodman

- ★ *Selects audio and video signal direction between two VCR's without re-making connections*
- ★ *Video preamplifier with sharpness and level presets*
- ★ *Output for video monitor or third VCR*
- ★ *Scart, DIN-AV, BNC and Phono socket connections*

The KTE Video Dubber enables you to record from one video recorder to another – and vice versa – without having to remake cable connections. In addition a video monitor or third VCR can be connected to one of the two signal sources. Only audio and direct video signals can be catered for, which means that the Dubber should not be used for switching RF input or output signals. If a conventional RF colour TV is to be used instead of a video monitor, then Maplin have an audio/video colour modulator kit suitable for this purpose (see end of text).

When two or three video recorders are connected together the amount of cable connections required can be a problem. The KTE Video Dubber and Switching Amplifier effectively offers an ideal solution to this problem by using a single push button to control the signal distribution, hence obviating the need for continuous reconnection. The Dubber is available either factory assembled or in kit form – the contents of which can be seen in Photo 1.

Operation and Function

On the back panel of the VU 7000 unit, you will find various plug connections to which VCR's and monitors are fitted. The first VCR can be connected either to a Scart or DIN socket and for the second VCR, there is a choice between Scart or BNC and phono socket combinations. In the latter case, the two phono sockets separately connect audio signals to the left and right stereo channels, while the BNC socket caters for the video signal only.

By a simple push button operation you can select either *playback from VCR1* and *recording on VCR2* or *playback from VCR2* and *recording on VCR1*. The operating mode changes every time the changeover button is pressed and the current condition is indicated by red LED's on the front panel.

A third pair of sockets accommodates VCR3, or a suitable video monitor (not a colour TV!) and either can be connected via the Scart or DIN sockets. The signal from VCR1 or VCR2 is applied to each of these sockets and offers the possibility of checking the picture quality for control purposes. If a third VCR is connected to these sockets, then it is possible to dub on two recorders simultaneously. A further feature of the VU 7000 is the video preamplifier, which has been included to process and buffer signals coming from the playback recorder, hence two independent VCR's can be driven simultaneously without loss of level.

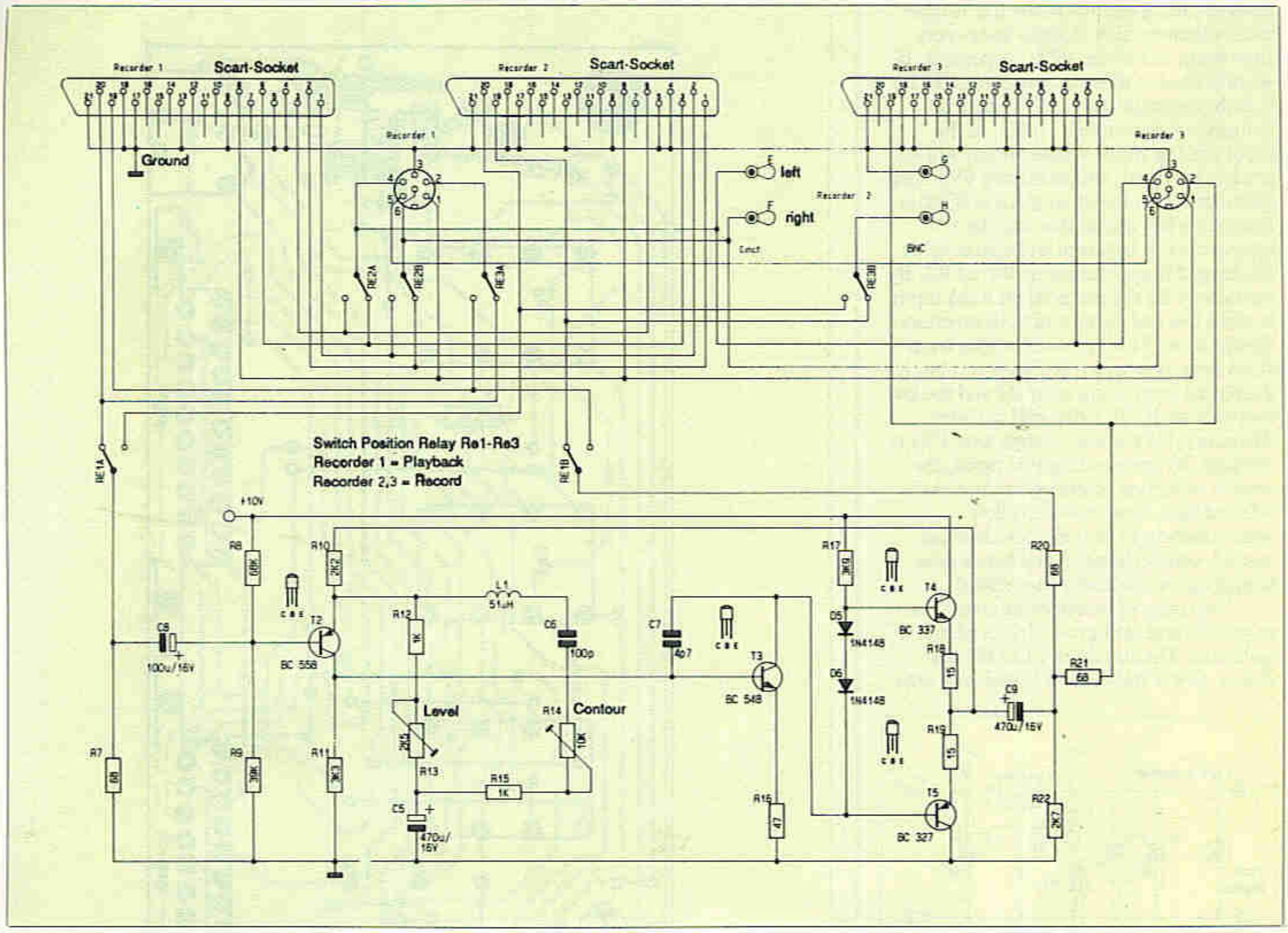

Figure 1. Base circuit of the VU 7000.

The Circuit

Figure 1 shows the circuit diagram. The output signal of VCR1, for which we will assume is switched to playback, (pin 20 of Scart 1 or pin 2 of DIN 1) is connected to the video amplifier via the relay contact RE1A. The PNP transistor T2, along with its additional circuitry, forms an impedance converter stage whose collector output directly drives T3, and hence the complimentary output stage consisting of T4 and T5.

Feedback from the output, via resistor R10 to the emitter of T2, provides the bias for the amplifiers operating level and also determines the stage gain. Facilities for pre-setting both video level and frequency response for optimum have been included; preset R13 sets the amplification (level) and preset R14 sets the HF frequency response (contour). Any adjustments required will have to be performed prior to boxing up the module as these presets are not accessible from the outside. You may be interested to note that pre-assembled versions of this project are factory preset with an amplification factor of 1, for the most linear frequency response.

Output signals from the preamplifier are coupled via C9 to R21 and the third VCR sockets (Scart 3 & DIN 3), while the second VCR (switched to record) is supplied from R20 at pin 19 of Scart 2 or via RE3B to the BNC socket (terminal H). Audio signals from the first VCR appearing on Scart 1 pin 6 left channel and pin 2 right channel (or DIN 1, pin 4 and pin 6) are connected directly to Scart 2 on pin 3 and pin 1 and both phono sockets (terminals E & F). Pin 8 on all three Scart sockets is connected to pin 1 of both DIN sockets and carries any source switched Scart control signals. This line is not switched as only one playback VCR is in operation at any one time, although control signals may be carried between externally connected video monitors.

When the relay switch contacts are in the opposite position, the preamplifier input is connected via RE1A to the second VCR (switched to playback) at Scart 2, pin 20. The third VCR/MONITOR output, Scart 3 & DIN 3, remains connected to the preamplifier's output via R21. Figure 2 shows the drive electronics for the three series connected switching relays RE1-3. Resistors R2 and R3, together with the two

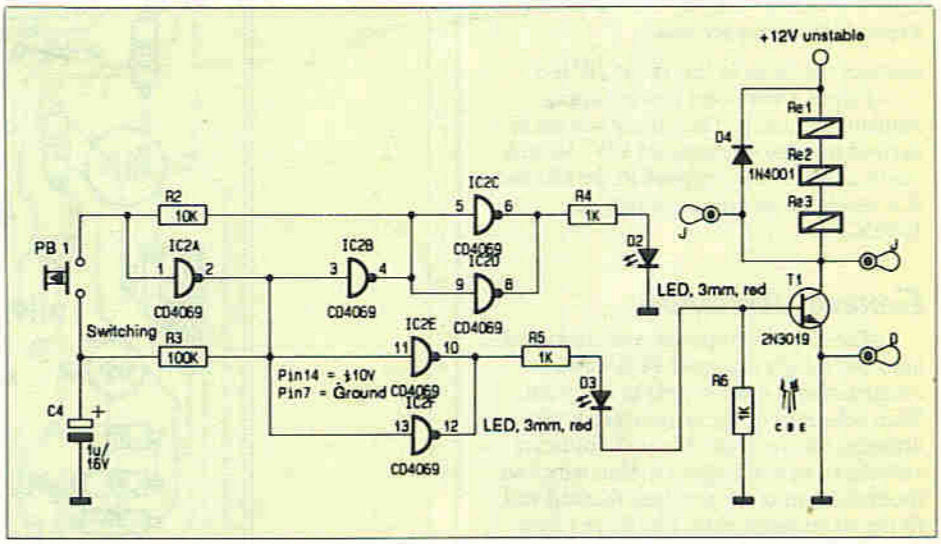

Figure 2. Drive electronics.

inverters IC2A and IC2B, form a bistable multivibrator which changes state every time the push button, PB1, is operated. If we now assume that the output from IC2B is high (approximately 10V) then this voltage level is coupled, via R2, to the input pin 1 of IC2A, whose output will be at a low potential (approximately 0V). This now means that the input pin 3 of IC2B is also driven low and in this way the arrangement is balanced and stable. C4 is discharged to approximately 0V via R3. By operating PB1 the potential on IC2A input is taken low and outputs of both inverters change state. The high level output from IC2A now tries to charge C4 via R3, but is prevented from doing so by R2 and the low output from IC2B, while PB1 is closed. Therefore, C4 will only charge after PB1 is released. By re-operating PB1 again, the reverse switching action occurs and as the selected time constants used allow approximately 10 button operations per second, contact bounce (and hence false triggering) is effectively suppressed.

Two pairs of inverters are connected in parallel and each group drives a LED indicator. The supply to LED D3 also drives power transistor T1, which in turn operates the three in-line relays, RE1-3.

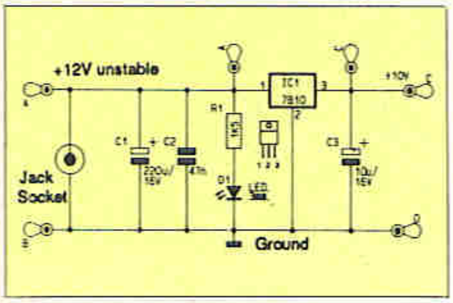

Figure 3. Power supply circuit.

Figure 3 shows the power supply regulator circuitry. The supply voltage is derived from an unstabilised 12V, 300mA mains adaptor (not supplied in the kit) and IC1 regulates the output voltage at 10VDC.

General Assembly

The circuit components are mounted onto two clearly arranged PCB's and construction is quite simple to carry out. With reference to the main board layout drawing, Figure 4 and Photo 2, fabricate 18 links from odd lengths of thin wire and insert them into the positions marked and fit the 10 terminal pins. The three relays must be fitted with pins 1 & 8 (the coil terminals) facing towards the Scart socket positions (see Photo 3 and Figure 5). In fact, the legend printed on top of these relays shows the bottom view of the pin layout and not the top view! You will also need to note that regulator IC1 is inserted with the back of its heatsink tab facing C2.

Both DIN and Scart sockets are mounted onto the PCB and this reduces the amount of external wiring quite considerably. The 3.5mm jack socket, BNC socket and two phono sockets are fitted onto the rear panel and wired to the

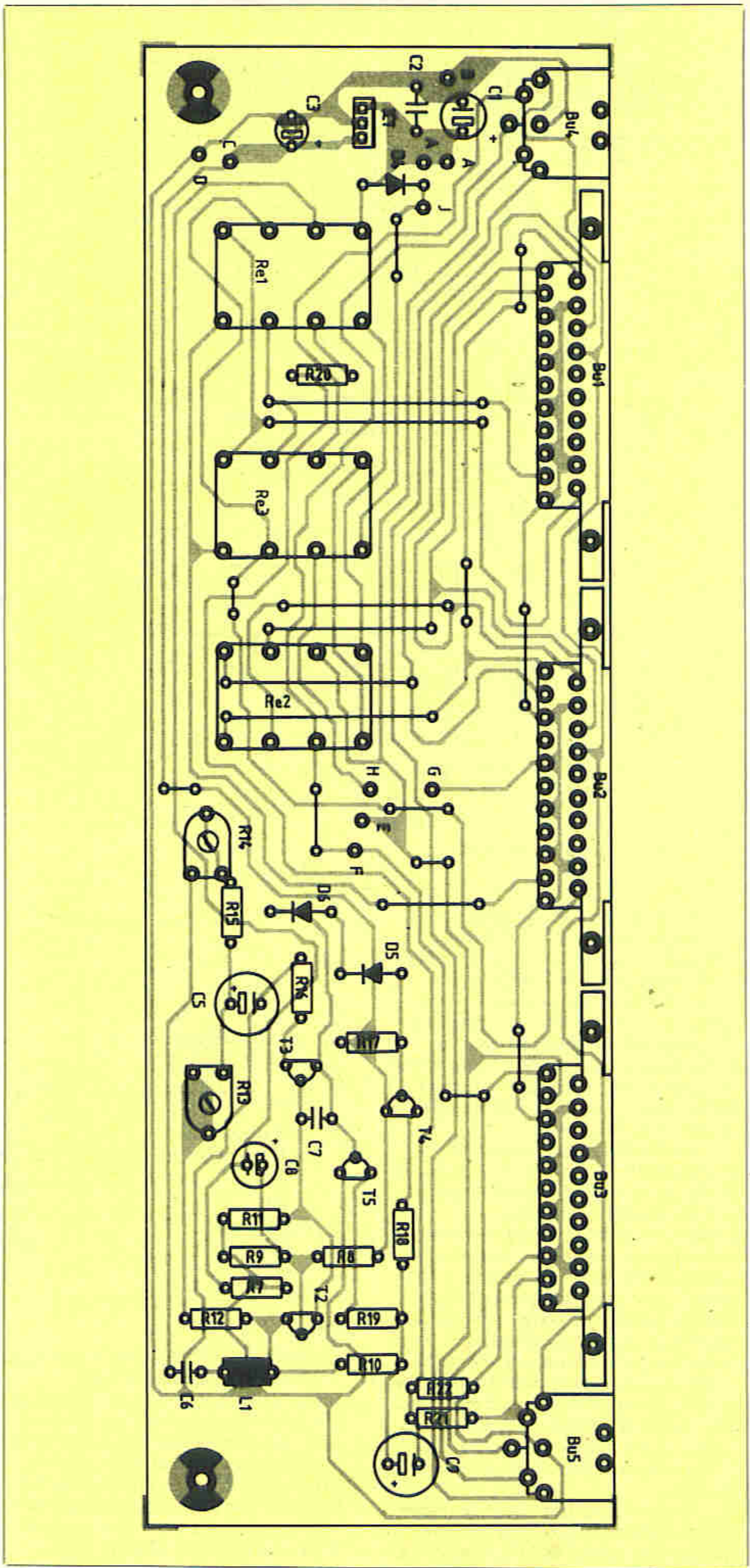

Figure 4. Layout of the main PCB.

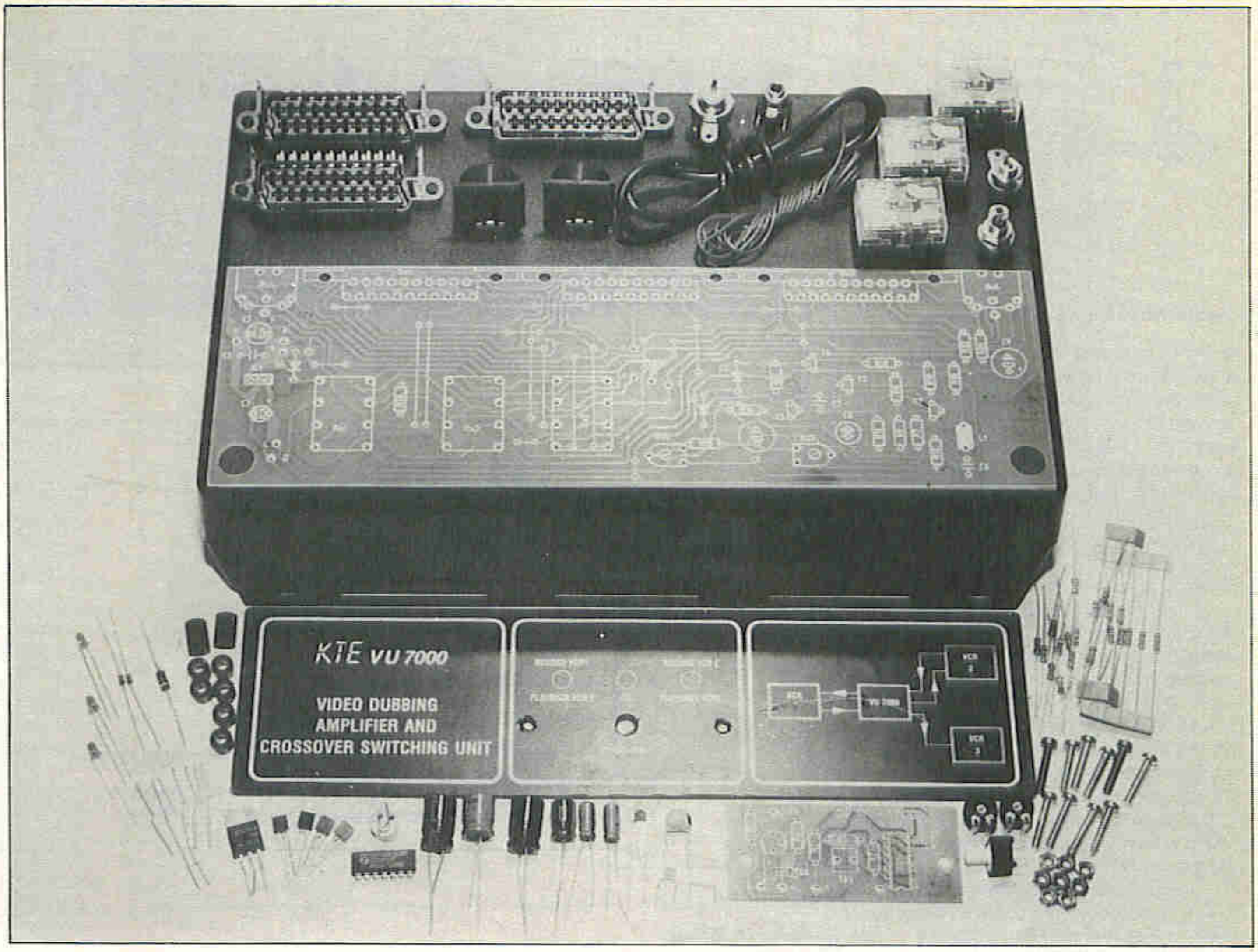

Photo 1. The kit of parts.

PCB, with the wire provided in the kit, after installation in the case.

Figure 6 shows how the main PCB is mounted onto the rear panel using three Scart sockets and two M3 x 15mm screws and 5mm spacers on each. The BNC and phono sockets, as well as the jack socket which accommodates the power supply, are then fitted into their appropriate places and screwed down.

Figure 7 shows the small selector PCB. Three LED's are positioned 10mm above the board and switch PB1 is mounted directly onto the board (see Photo 4 and Figure 8). The legend shows LED's D3 and D1 both facing the same direction, but D2 facing in the opposite direction. This is a printing error and D2

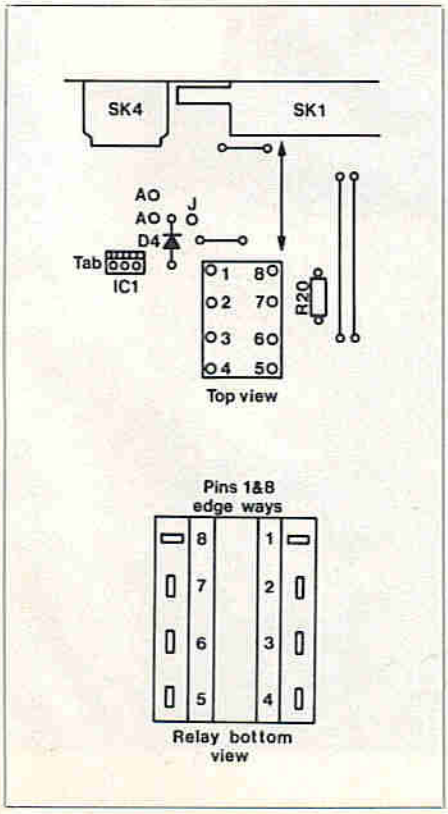

Figure 5. Relay orientation.

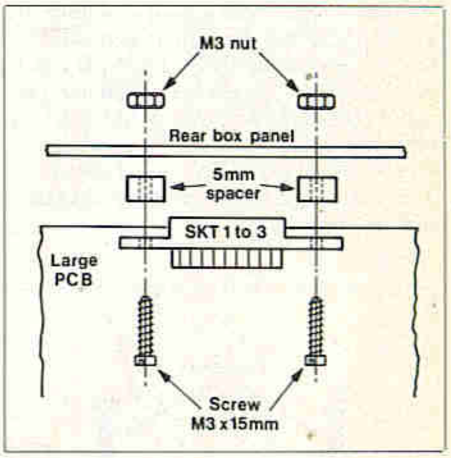

Figure 6. Mounting the main PCB.

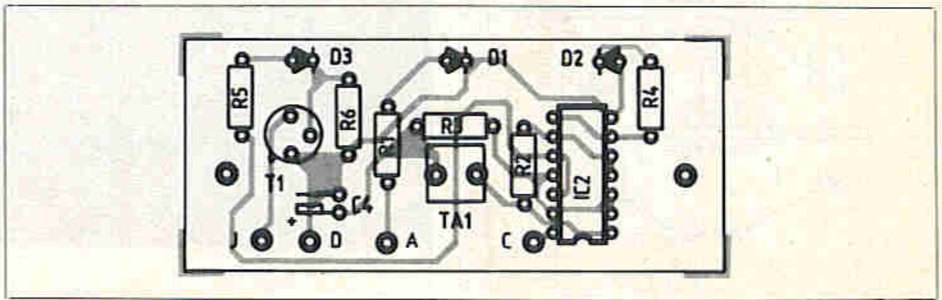

Figure 7. Layout of the push-button selector PCB.

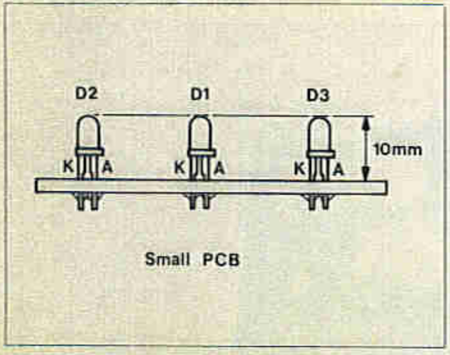

Figure 8. Mounting the LED's.

should be mounted in the same direction as the other two. If you do not already know, the arrow point is the cathode terminal and corresponds to the shorter lead on the LED package, or to the lead next to the flat on the skirt. Capacitor C4 is inserted and positioned with its body laying flat along the PCB and the four terminal pins are inserted from the component side. IC2 solders directly into the board and no socket is supplied.

I noticed a few small variations between the parts list in the instruction manual supplied and component markings: for example, C4 is 100V and C3 is 25V rated, not 16V as stated – although this change does not affect operation in any way. Manufacturers often reserve the right to change component types – sometimes without prior warning – and this can lead to confusion, so I suggest that the parts list is cross referenced with the circuit diagrams to be sure.

After assembly, the push-button module is mounted onto the front panel as shown in Figure 9 and Photos 5 and 6. Finally, the main PCB assembly is fitted into the case and both modules are connected together as shown in Figure 10, keeping wire lengths as short as possible. Connections are designated A, C, D and J on both PCB's. On the main PCB only, A and B connect to the power input jack (A is positive), E and F connect to the phono sockets and H to the BNC (see Photo 7). Terminal G is the 0V common to the last three connectors.

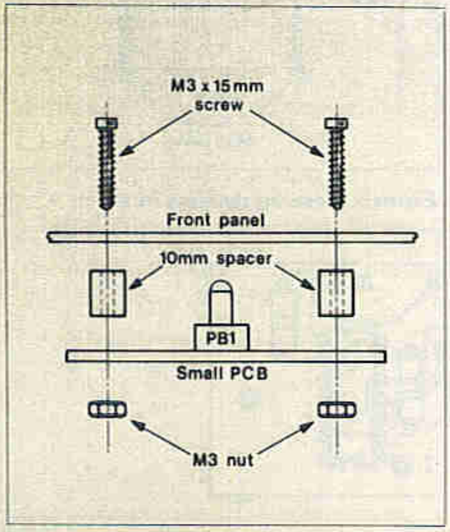

Figure 9. Mounting the selector PCB.

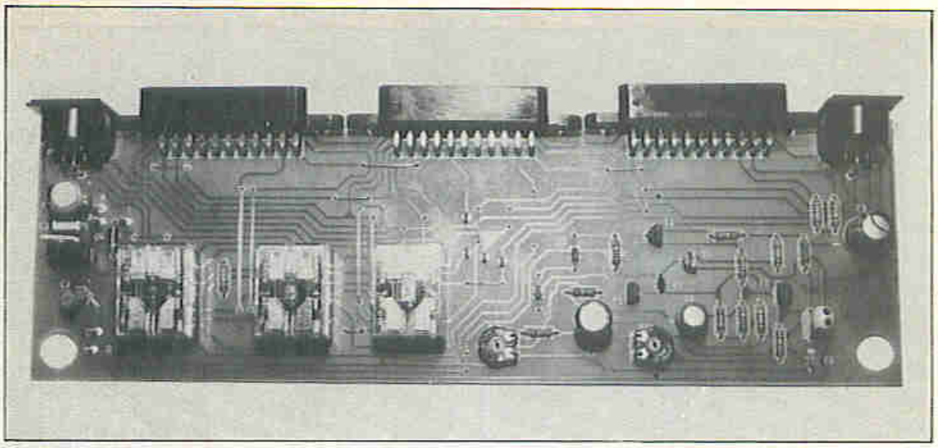

Photo 2. Main PCB.

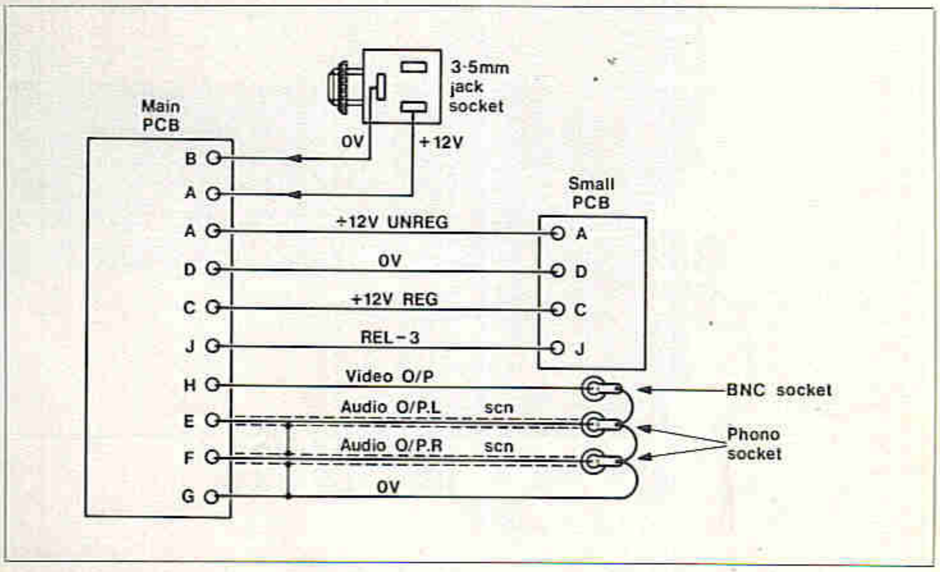

Figure 10. Wiring.

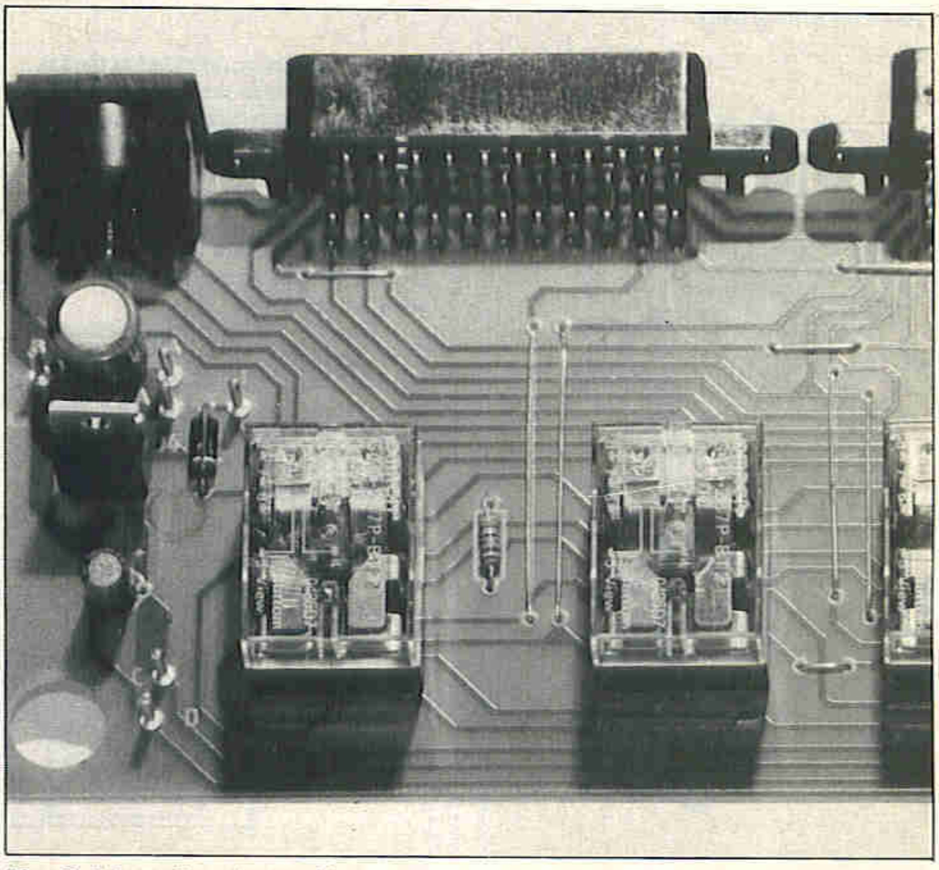

Photo 3. Relay and regulator positions.

Operation

A 12VDC supply is required for powering the Video Dubber, such as the Maplin XX09K mains adaptor, and for the wiring shown in Figure 10, the 3.5mm adaptor plug must be tip positive and should be tested to be sure. When the Dubber is first powered up, LED D1 lights up to show power-on and LED D3 and all three relays operate. When push button PB1 is pressed, LED D3 goes out, the three relays drop out and LED D2 lights up. Successive operations of PB1 cause the LED's and relays to operate and release alternately.

Connections to the Dubber are made via Scart and DIN connectors, as shown in Figures 11 and 12. These revised drawings are slightly different from those supplied in the kit and relate directly to the circuit; whereas the kit drawings relate to the Scart and DIN-AV STANDARD and not to the circuit! To best describe the switching functions I will refer to 2 operating modes:

> **MODE 1:** Record on VCR2 – Playback from VCR1.
> **MODE 2:** Record on VCR1 – Playback from VCR2.

MODE 1 (D2 operated, RLE 1-3 released).

(a) VCR 1 set for playback on Scart 1. Video in on pin 20, audio in on pin 6 and pin 2.

(b) VCR 1 set for playback on DIN 1. Video in on pin 2, audio in on pin 4 and pin 6.

(c) VCR 2 set to record from Scart 2. Video out on pin 19, audio out on pin 3 and pin 1.

(d) VCR 2 set to record from BNC. Video out from pin H, audio out from phono E and phono F.

MODE 2 (D3 operated, RLE 1-3 operated).

(e) VCR 1 set to record from Scart 1. Video out on pin 19, audio out on pin 3 and pin 1.

(f) VCR 1 set to record from DIN 1. Video out on pin 2, audio out on pin 4 and pin 6.

(g) VCR 2 set for playback on Scart 2. Video in on pin 20, audio in on pin 6 and pin 2.

(h) VCR 2 set for playback on BNC. Video in on pin H, audio in on phono E and phono F.

MONITOR.

(j) VCR 3 set to record from Scart 3. Video out on pin 19, audio out on pin 3 and pin 1.

(k) VCR 3 set to record from DIN 3. Video out on pin 2, audio out on pin 4 and pin 6.

A video monitor could be used in place of the third VCR on Scart 3 or DIN 3, but be aware that these two sockets are fed from the video preamplifier output and not directly connected to the other Scart and DIN sockets. On the preamplifier, R14 can be set fully anti-clockwise for

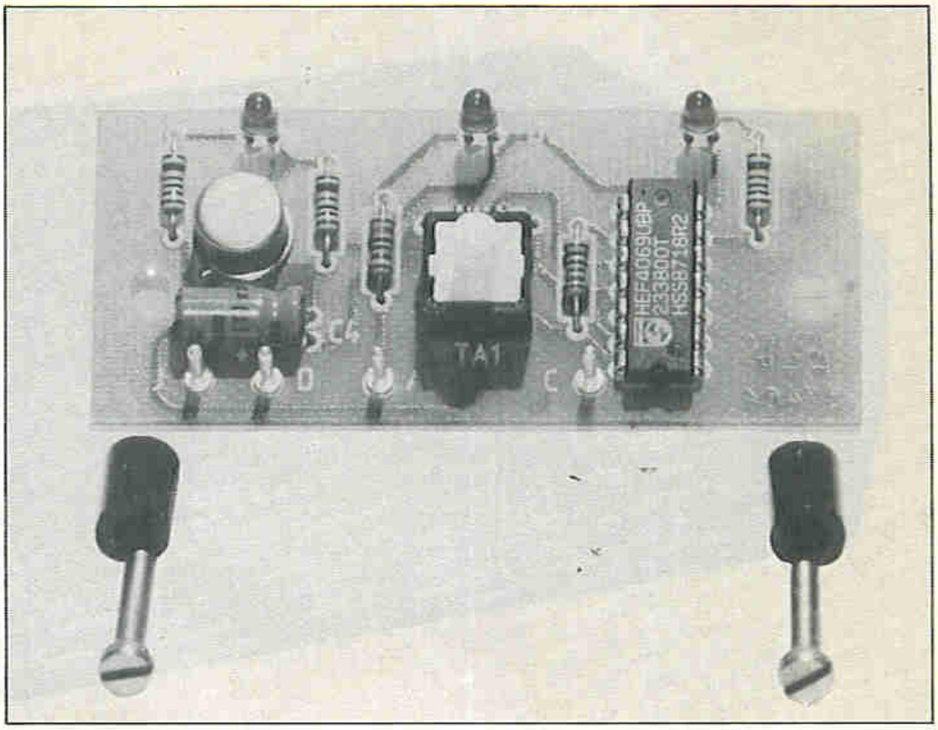

Photo 4. Selector module.

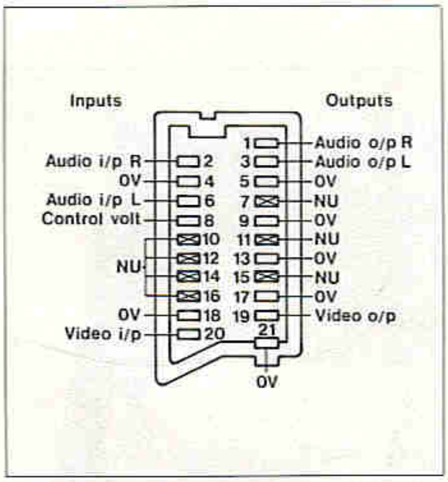

Figure 11. Revised Scart connections.

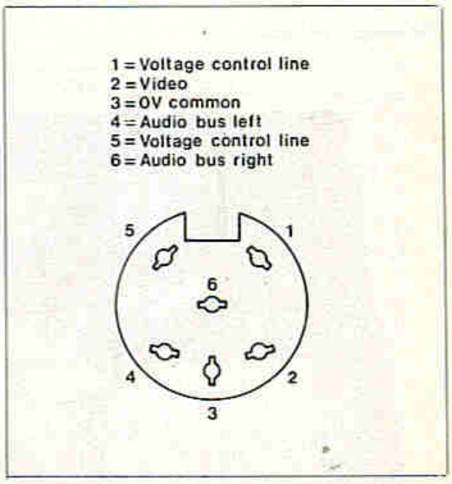

Figure 12. Revised DIN connections.

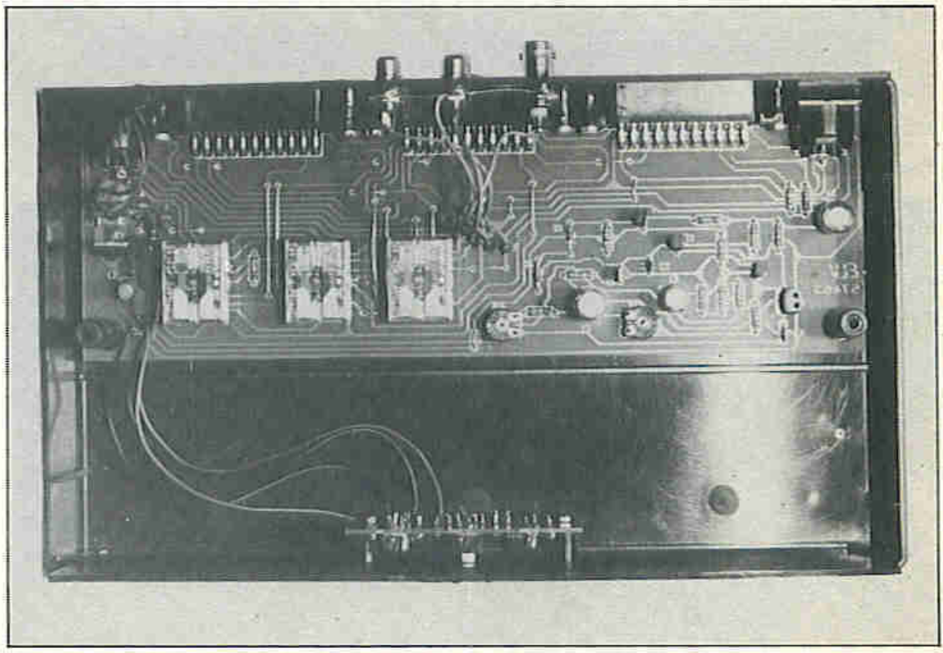

Photo 5. Complete assembly.

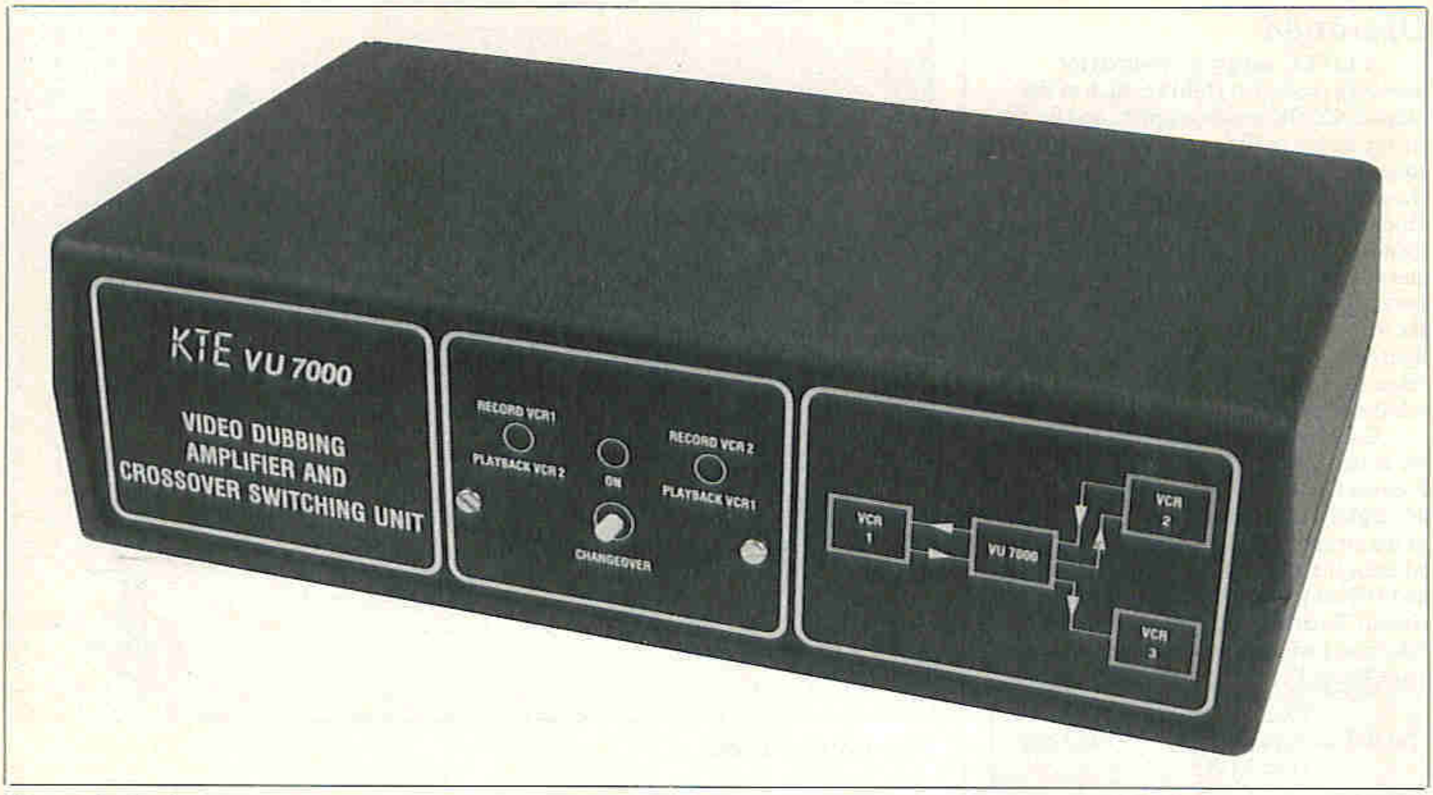

The completed unit.

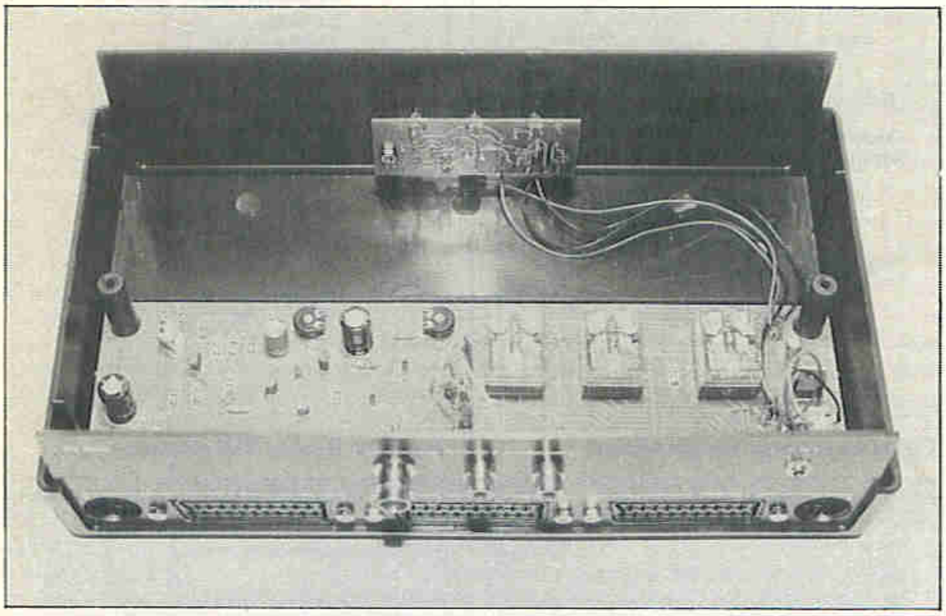

Photo 6. Note the selector PCB.

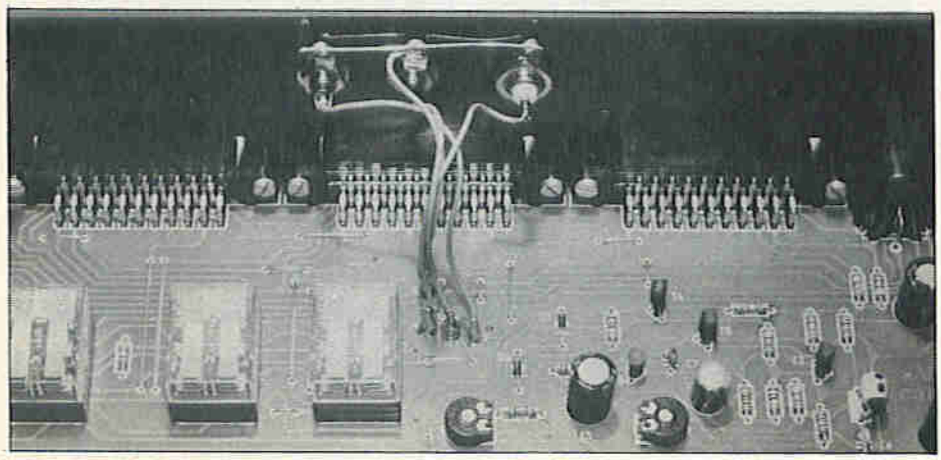

Photo 7. Note the wiring to the BNC and phono sockets.

maximum HF peaking and its effect is to increase the picture 'sharpness' for a more defined image. Preset R13 should be set to its half travel point for the normal setting; full clockwise rotation reduces the contrast and full anti-clockwise rotation increases the contrast, for approximately 3dB cut and boost.

In Conclusion

The Dubber is both simple to construct (even simpler if you purchase the ready built version!) and simple to use. In the U.K., the Scart standard is not that popular yet and it is likely that you will have to make up your own Scart connections from single connectors and screened cable; this may also apply to the 6 pin DIN-AV plugs. However, not too much of a problem for the average constructor perhaps? It is important to understand that the unit is not an enhancer and cannot be used to improve the quality of poorly recorded video's. In fact, it is possible that copies of poor recordings may occasionally loose sync' altogether. However, if you are 'into' dubbing videos and happen to be less than happy with the constant cable changes, then the Video Dubber and Switching Amplifier is for you.

. The following items are available from Maplin Electronics:

Video Dubber Kit LM71N £49.95
Video Dubber Ready Built XM16S £69.95
12V-300mA AC Adaptor XX09K £2.95
Scart Plug 21 way FJ41U £1.20
DIN Plug 6-pin HH29G 26p
Phono Plug HH01B 24p
BNC Plug 75 FE99H £1.35
Audio-Video Modulator Kit LM78K £14.95
Hardware Kit (for LM78K) LM79L £9.95

NEWS REPORT

Amstrad Get Their Chips

Seldom slow to protect its interests, Amstrad has solved its D.RAM chip shortage by aquiring a 9% stake in the US chip manufacturer Micron Technology. Amstrad whose profits increased by nearly £25m to £160m for the year ending June 1988, gets through some 5.5m dynamic random access memory units a month, in a market-place where demand is currently outstripping supply. Alan Sugar who joins the Micron board, has a guaranteed 9% share of DRAM output for the next three years.

Amstrad may however have caught the chip bus too early. The American semiconductor industry is predicting a 3% downturn in the world-wide market by 1990. The slowdown which will effect the DRAM chip market, has been triggered by diminishing low-end sales and increased manufacturing capabilities. To confirm this slowdown, INTEL is reporting that its boom time is over. Many users apparently panicked and ordered their years DRAM needs in one go. Supply is now matching demand and the demand element still sits on sizeable stocks and is postponing orders.

In fact, as John Sommerwill of Barnet-based BOS Systems House Saffronrose suggests, with improved memory supplies and continued competitive pressures, computer system prices look set to fall by the middle of this year.

DEC Moves

Digital Equipment have launched a set of business and office system products and enhancements to its All-In-1 integrated user applications. This is a menu-driven software package that integrates office applications and the new features include the DEC compound document architecture and mail-bus distributed directory services. Meanwhile DEC are hoping to get a bigger share of the micro action by joining forces with Tandy, who will manufacture machines to DEC specifications. Earlier last year, DEC announced a series of technology agreements with Apple and Compaq.

Focus On Fax

The CBI have recently forecast that some 4 million people will be working from home by 1995. No doubt the office automation suppliers are already getting out their marketing spreadsheets.

Even before the recent postal dispute, the role of facsimile systems were clearly outstripping that of telex. Already the number of fax machines operating in the UK has passed those of telex. In fact of the 300,000 installed machines, nearly half were sold last year. Surprisingly perhaps, a recent survey of US communications managers put fax as being top of the list in terms of importance, followed by ISDN standardisation. An added sales boost will be provided by market leaders Canon who are pioneering the sale of plain paper fax. Care: with companies increasingly featuring their fax numbers on letter headings, phoning a fax number could damage your ear-drums.

Multicore Solders On

Multicore Solders are producing pellets of solder containing an anti-oxidant which will minimise the formation of dross in static solder baths. The anti-oxidant forms a thin, colourless and passive surface which protects molten solder against oxidation at normal dipping temperatures – thereby eliminating 'bridging and icicles'.

Texas Accelerates

Texas Instruments has introduced the world's fastest programmable logic device – a programmable address decoder aimed at improving memory performance of microprocessors such as the 80386, 68030 and DISC processors. According to TI, process speeds already dramatically surpass memory times and are expected to double over the next few years. By decoding addresses much faster than conventional PAL architectures, TI's 7ns device allows designers to take full advantage of the latest processor technology.

Switched On

Thanks to the popularity of such equipment as gaming and vending machines, the end user market for electrical switches in the UK is very much a growth market. So reports a recent Frost & Sullivan survey which puts the total electrical switch market in West Europe as being worth $3.55b, raising to $4.34b by 1992. In user terms, the automobile industry are clear winners with the fastest growth potential. By 1992, levers and rocker switches – todays best sellers – will be taking second place to key switches and keyboards in terms of market size. In the UK, computers and business machines represent the major uses of key switches amounting to £354m, a figure which is growing by 6.8% a year.

Getting All Charged Up

It is pleasing to know that the world outside is getting the Maplin message. According to a recent Sunday Times Innovation page feature, it is the green revolution which is responsible for the emergence of rechargeable batteries. Chargers incidentally can be bought for £20. Interesting, but as many Maplin customers can confirm, we have been selling these products for many years - and our chargers are available from as little as £3.95. A complimentary copy of The Maplin Catalogue is on its way to the editor.

Up The PC

Last year saw the sales of PCs in Europe jumping by an incredible 66%, says the European Personal Computer Industry Services. Until 1987, the UK PC market was the biggest in Europe but has now been overtaken by France and Germany. International growth leaders include Apple, Compaq and Tandon. In the UK, Amstrad had 12.5% of the micro market reports Romtec. However leaders in the 386 market include Apricot, IBM and Compaq.

Sound Advice

A new generation of Designer Range stereo headphones, has been introduced by Ross Consumer Electronics. The new range includes products specifically produced for use with compact disc equipment, plus a change in earcup shape from round to oval. Ross claim to be the UK headphone market leader for the past three years.

Get It Taped

Giving away tapes seems to be the flavour of the month – if not year (see the special offer with the new Maplin 1989 catalogue). Now TDK are giving every P.C. user who buys 5 boxes of TDK floppies, a free triple pack of TDK audio cassettes. A further fringe benefit (not yet reflected in the Maplin special offers) is a free pair of Lee Cooper 'special edition' jeans in exchange for audio pack tokens.

DTI Raises The Alarm

Apart from saving you the worry and inconvenience of having your car stolen, fitting it with an alarm might seem to be a good way to help prevent crime. But, warns the DTI, if the alarm you choose is one which uses a radio, and has not been approved, you could be breaking the law yourself.

There are two types of car alarms which use radio: the 'car theft paging alarm' and the 'radio key'. It is mainly the car theft paging alarms that are causing concern. If your car is being tampered with, they will alert you by transmitting a radio signal which is picked up by a small receiver which you are wearing.

But, for the use of such alarms to be legal, they have to be type approved by the Department of Trade and Industry, to ensure they are not transmitting any unwanted signals. If you have already bought one of these illegal alarms – they should be designated MPT 1336 – you could have cause for complaint against the person who sold it to you. After all, goods can hardly be described as being fit merchandise if they cannot be used legally.

Ring Of Truth

While Mercury, the UK's alternative public telephone carrier was announcing at the recent TMA event at Brighton their first ISDN service in London and Manchester, new regulations were being introduced which will eliminate the requirement for BT to inspect equipment which has been installed by approved suppliers. Even so, complaining to BT could take a little longer. An extra digit is to be added to London telephone numbers. Mercury lost little time in putting forward the belief that every UK telephone customer should be issued with a personalised number, irrespective of location or the service used.

Yet more 'phone news. Service 800, the international toll free organisation, has introduced their Executive Tele-Card which allows holders to 'phone toll-free to and from many world business centres. The central billing facility allows the holders to select the billing currency and take advantage of tariff routings. Bad news perhaps for the hotel industry who add hefty surcharges for telephone use, but great for the international jet-setter.

Music On The Move

Still covering audio tapes, Memorex have introduced a new 'designer' cassette carrying case, foam-padded for added protection. The zip-lidded wipe clean bag, plus ten C90 tapes costs under £10.

EDI In The Fast Lane

Leading industry consultancy Applied Network Research of Twickenham state that the advent of 1992, when international trade barriers will be deregulated, will see a rapid escalation in EDI services. Electronic Data Interchange, a method of electronic paperless transaction handling, the company notes is growing by as much as 15% per month, in a market which by the end of the year will be worth some £200m.

Ladies First

Although employment in the electronics industry is still below 1985 levels, the gap is being closed reports The Engineering Industry Training Board. The EITB meanwhile have set up a special training programme for women and girls to encourage them to join the industry. Currently jobs for the girls are clearly outnumbered by men in terms of skills, professional and management positions.

HDTV

The race is now on to develop High-Definition TV, a market expected to be worth some $40,000m over the next twenty years. In the US, high technology companies will be investing mega bucks to catch up with the Japanese who have already spent $700m on High-Definition TV development. The new system is expected to be available in the market place within two years, gives a high quality TV image, but as yet is not compatible with normal TV broadcast signals.

PC Seminar Workshop

OS/2, the IBM PC preferred operating system, looks set to become standard issue among corporate PC users and managers. The Federation of Microsystems Centres, who claim to be the UK's largest independent training and consultancy organisation, are running a series of technical workshops, *'OS/2 The Inside Track'* in Bournemouth, Birmingham, Durham and Glasgow in 1989. Topics to be covered include current operating systems, Xenix v OS/2, hardware configurations and the design concept. Cost £120 +VAT, for details contact Federation on 091 417 8517.

STC Hedges Bets

STC, the communications and information system group believes in hedging bets. The group have announced a near £70m order from BT covering enhancements to the Directory Assistance Service and software for the programmable digital multiplexer to help expand the BT City fibre network. Meanwhile, STC has received orders from Mercury Communications, the UK's alternative PTT for £16m, covering optical line systems and higher order multiplexers for Mercury's new UK fibre-optic networks.

Digital Record and Playback Module

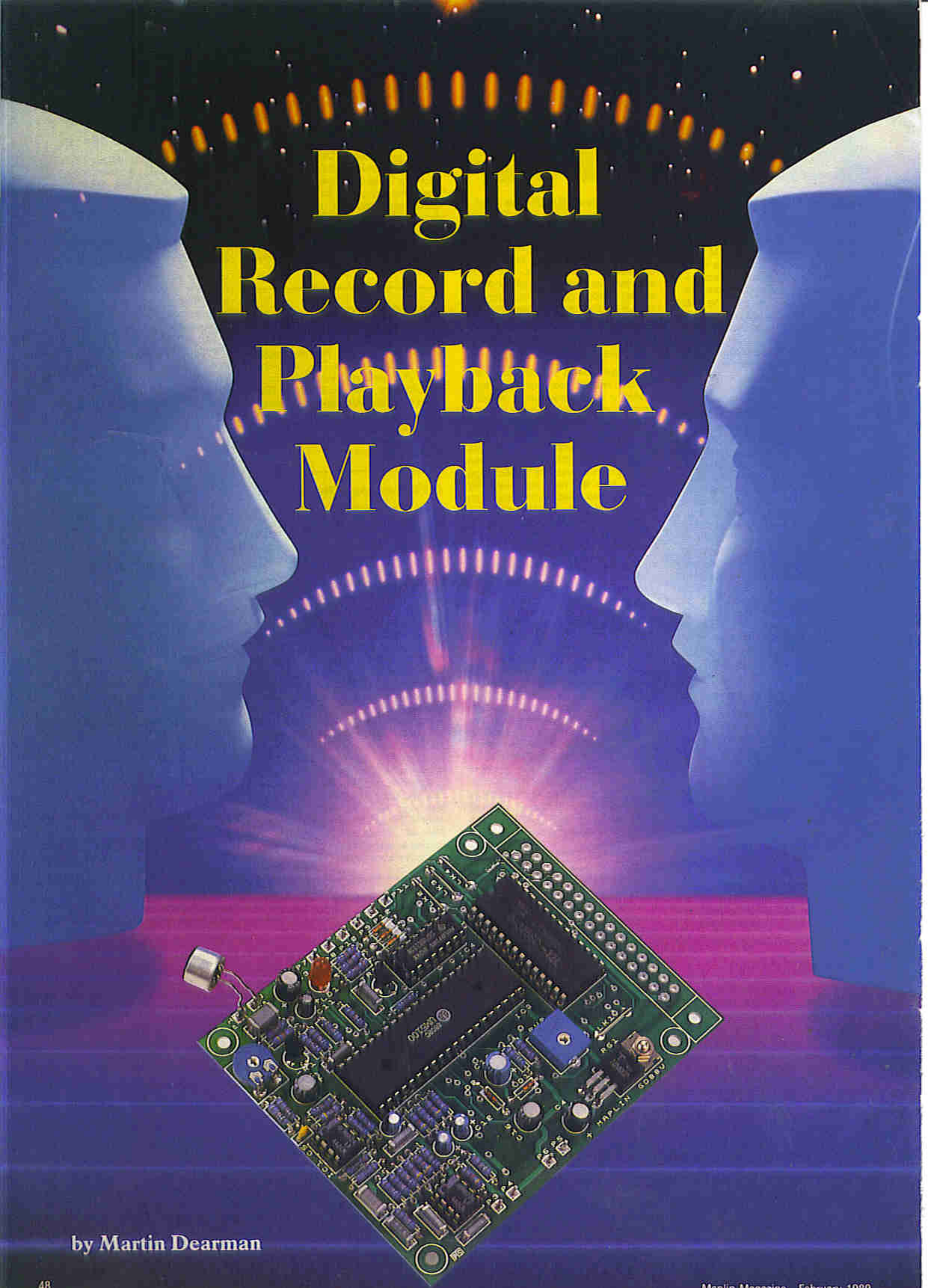

by Martin Dearman

This project is based around the UM5100 digital voice recorder and playback integrated circuit where speech is digitally recorded into memory and then played back. Digital recording has the advantage over tape recording, in that there is no mechanical wear and tear in the tape head or tape. Applications include voice message pads, security systems and telecommunications, and it can also be used in a vehicle, as it will run from a 12V supply. For memory, either an 8k byte CMOS Static RAM (SRAM), type 6264, or a 32k byte CMOS SRAM, type 62256, can be used and with the 32k byte SRAM supplied, record and playback durations of between 5 and 20 seconds are possible. The module can be further expanded with an EPROM programmer board, and another option will be a replay only board for playing back pre-recorded messages stored on an EPROM (both of these add-ons will be published in a future issue).

Circuit Description

Figure 1 shows a block diagram of the record and playback module, and Figure 2 shows the circuit diagram. Speech is

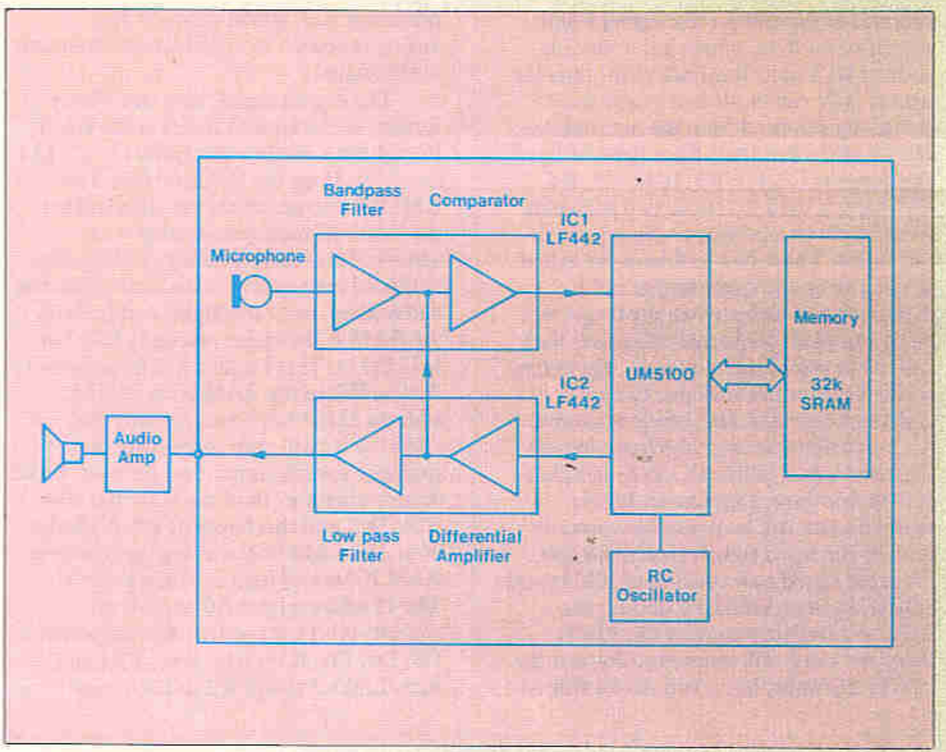

Figure 1. Block schematic of the system.

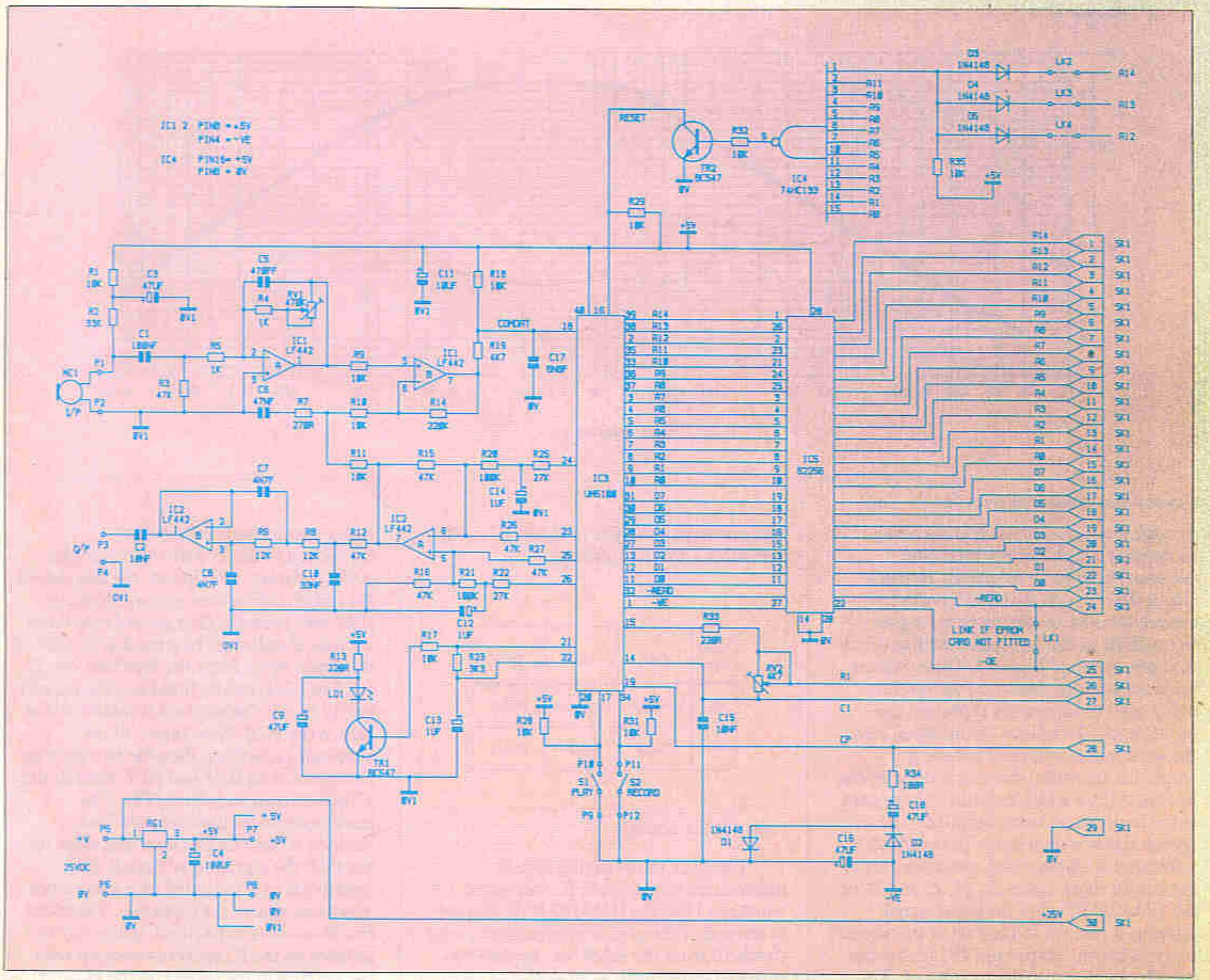

Figure 2. Circuit of the record/playback module.

received at the electret microphone and amplified by IC1a, which has a variable resistor RV1 in its feedback path, thus the gain of IC1a can be altered to suit the sensitivity required from the microphone. IC1a is also a bandpass filter (consisting of components C1, R3, R5, IC1a, C5, R4, RV1) and is used to reduce two problems from which an analogue to digital circuit can suffer. These two problems are called aliasing error and quantisation noise. Aliasing error occurs when the frequency being sampled (converted) is greater than half of the sampling frequency. The error occurs because the analogue to digital converter circuit (ADC) needs to sample the input signal at twice the frequency of the input signal (at least); i.e. to sample a 10kHz sinewave, a minimum 20kHz sampling rate will be needed to correctly convert the input signal. If, for example, the input signal now consists of 10kHz and 20kHz sinewaves mixed together, the ADC will correctly convert the 10kHz sinewave and it will attempt to convert the 20kHz sinewave, but it will not be able to manage it successfully as it is not being sampled at a high enough rate. The bandpass filter has a frequency response characteristic such that it will reduce or entirely remove these unwanted higher frequencies as can be seen in the frequency response graph of Figure 3. Quantisation error occurs when there are too few bits being used to adequately represent the input signal. To reduce quantisation error, the input signal will need to have its amplitude increased and this is done by the bandpass filter which exhibits voltage gain at the frequencies being sampled. The speech signal is then fed to IC1b, which is a voltage comparator and compares part of the output signal (pins 23, 24, 25 and 26 of the UM5100 IC) with the input signal arriving at pin 5 of IC1b. Part of this signal also reaches the output pin P3, so that the speech can be externally monitored. The speech signal now enters the voice processor IC3, which converts the analogue speech to a digital representation of this signal.

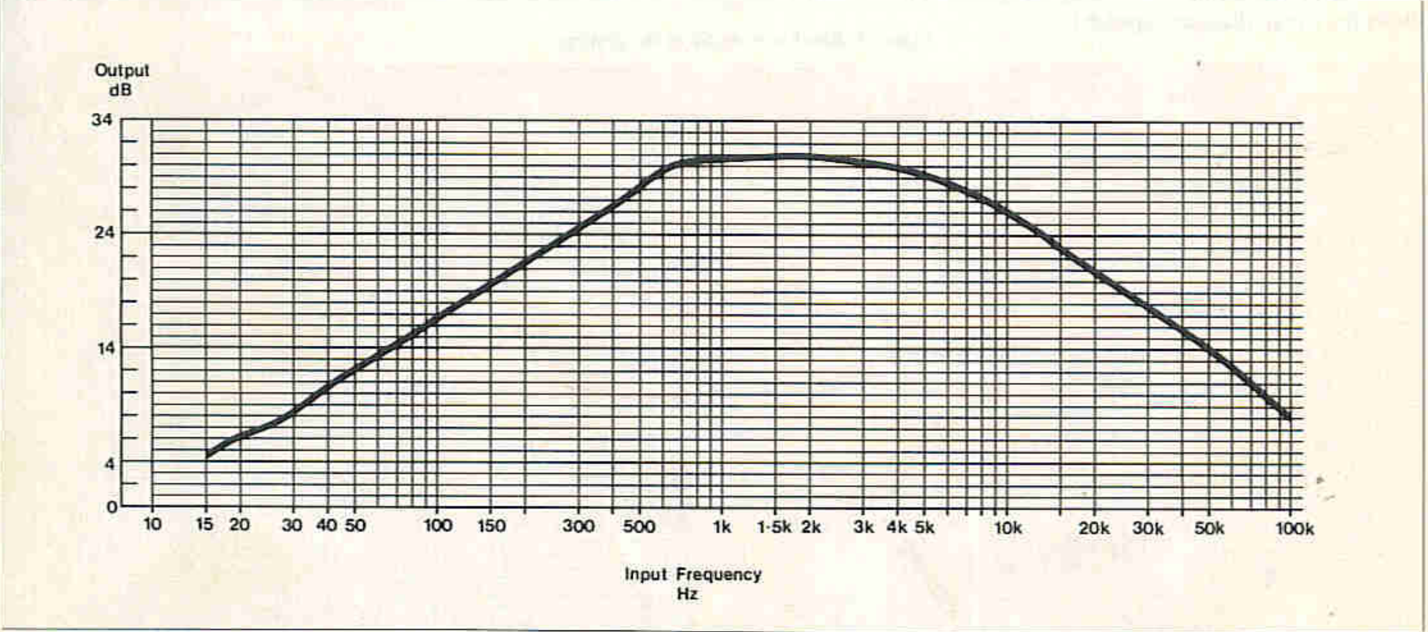

Figure 3. Bandpass filter response.

The digital signal, now in a binary format, is placed into IC5, a static RAM IC, via the 8 bit data bus (pins 11, 12, 13 and 27 to 31 on the UM5100 IC). The UM5100 also generates the address that the RAM IC requires, starting with address 0 and incrementing (adding one) to this address every time a conversion has taken place, until the highest address of the RAM IC has been reached, 32767 or 111111111111111 with a 32k byte memory device. When the RAM IC is full, i.e. address 32767 has been reached, the UM5100 IC will stop converting the analogue speech signal, and be reset. Reset occurs when pin 16 of the UM5100 is at +5V DC, and this happens when address lines A0 to A14 (when using the 32k byte RAM IC) are all high, i.e. at a logic '1'. The 15 address lines A0 to A14, are logically ANDed together by components D3, D4, D5, R35, IC4, R32, TR2 and R29. Links 2 to 4 (LK2 to LK4) are inserted to suit the size of RAM IC used, see Table 1 for link settings.

RAM Size	LK2	LK3	LK4
8k	Unmade	Unmade	Made
32k	Made	Made	Made

Table 1. Link settings.

Playback of the digital speech information in the RAM IC will occur when pin 17 of the UM5100 IC is shorted to ground. This speech information is read (fetched) from the RAM via the data bus, then converted back to an analogue signal by the UM5100, and fed out of the IC on pins 23 to 26. The four signals coming out of the UM5100 IC are combined into one signal by differential amplifier IC2a. The signal is then low pass filtered by IC2b, to remove unwanted clock and noise signals, and output to pin P3. This signal will need to be amplified by an external amplifier, as the average level is only 250mV RMS. There is also a LED (LD1) indicator fitted that will light when speech is being received and played back by the UM5100. The record and playback module can be made to replay continuously by keeping pin 17 of the UM5100 shorted to ground.

PCB Assembly

The PCB is a double-sided, plated through hole, fibre glass type. Removal of a misplaced component is therefore quite difficult, so please double-check each component type, value and its polarity where appropriate, before soldering. The PCB has a printed legend to assist you in correctly positioning each item, see Figure 4. The sequence in which the components are fitted is not critical. However, it is easier to start with the smaller components. Begin with the metal film 0.6W resistors, then mount the five diodes D1 to D5, taking care to insert them the right way round as they are polarised; the cathode is indicated by a band at the end of the diode body. Next the four link wires, LK1 to LK4, can be fitted and the pins P1 to P12 have to be inserted from the solder side of the PCB. Next insert all the polyester capacitors, then the two variable preset resistors RV1 and RV2, then fit the 470pF ceramic capacitor. The nine electrolytic capacitors are polarised devices, so take care in inserting them into the PCB the correct way round; the negative lead is indicated by a minus sign down one side of the capacitor. There are five IC sockets to be fitted; make sure the notches on the IC sockets match up with the notches in the legend on the PCB. A little trick to hold the sockets in place

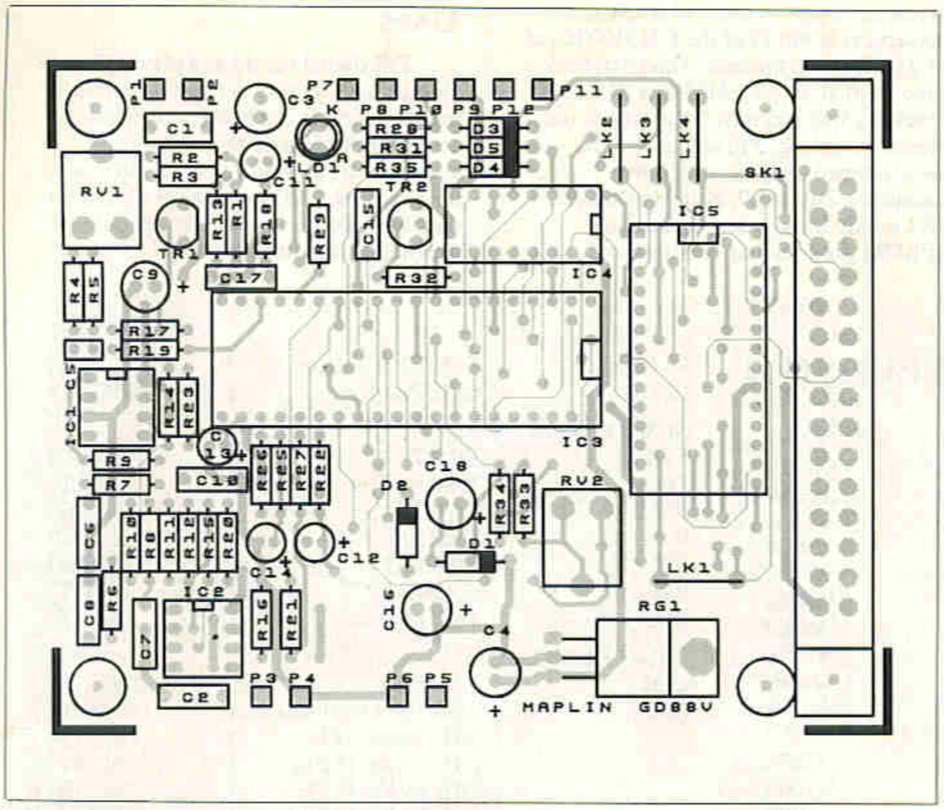

Figure 4. Layout of the PCB.

during soldering, is to bend two of the sockets legs over once it has been inserted into the PCB. This will hold the socket in place until all the other leads have been soldered, then straighten out the two previously bent legs and solder them. The ideal pair of legs to bend are the two at each end of the socket and diagonally opposite each other. Next fit the two transistors TR1 and TR2, taking care to match the body shape of the transistor with the outline on the PCB, then the LED is inserted into the PCB; the cathode is indicated by a flat side on the body and by the shorter of the two leads. The regulator IC is fitted next and is bolted to the PCB using an M3 nut and bolt (see Figure 5). The leads of the regulator have to be bent at an angle to get them into the PCB with the M3 nut and bolt as shown. Mount the electret microphone as shown in Figure 6, taking great care to wire it the correct way as it is a polarised device; the 0V (ground) pin is connected to the microphone case.

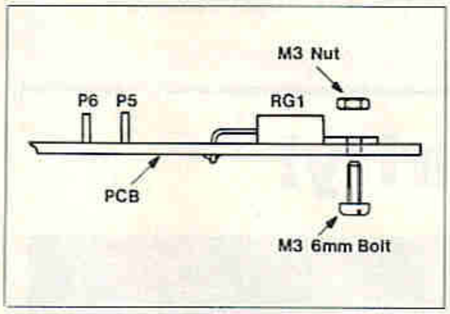

Figure 5. Mounting the regulator.

Testing

All of the tests necessary can be made with the minimum of equipment. You will need an electronic digital (or analogue moving coil) multimeter and a stabilised DC power source, that can supply up to 50mA at 7.5 to 25V DC. The lower voltage would be preferable at this stage, due to the power dissipation in the 78M05 +5V voltage regulator being less at 7.5V DC, the higher voltage of 25V DC will be required when the plug-in EPROM programmer PCB is used (this will appear in a later issue). Connect the power source to P6 and P5, with 0V to P6 and the positive to P5, and note the average current drain is about 10mA. Also an amplifier will be needed, the LM386 amplifier module (kit number LM76H) being ideal for this task (see 'Data File' in issue 29). Connect the amplifier to P3 and P4, with 0V to P4 (see Figure 7). Now you are ready to record a voice. To activate recording mode, P11 will have to be momentarily shorted to ground by connecting P11 to P12, if P11 is left connected to P12 then recording will be continuous, the UM5100 will notice that P11 is shorted to ground when it is reset, which occurs when the RAM IC is full, then the UM5100 will put its converted speech signal into the lowest memory location of the RAM IC, and of course the data previously in the memory device will be overwritten. Please note that the optimum speaking distance from the electret microphone is 100mm. The recording level sensitivity can be adjusted by rotating variable preset resistor RV1; the direction of rotation for minimum and maximum sensitivity is also shown in Figure 7. The recording and playback duration can be adjusted by variable preset resistor RV2 and the recording and playback duration has a range of 5 to 20 seconds. There is a trade off of course, for the longer duration times the quality of the speech deteriorates. The highest quality

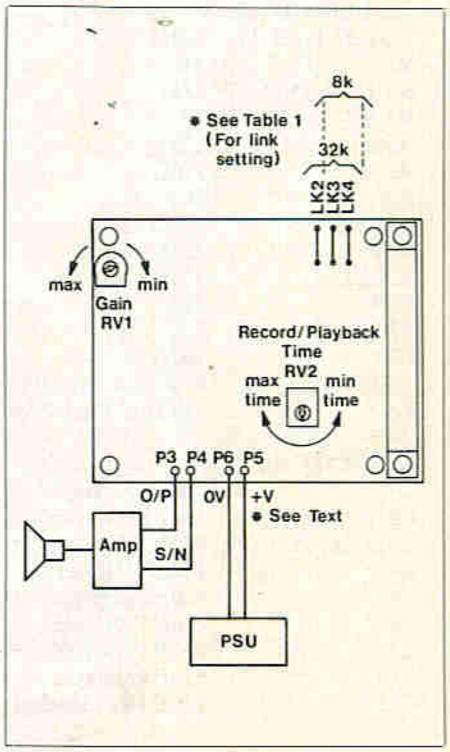

Figure 7. Controls and power connections.

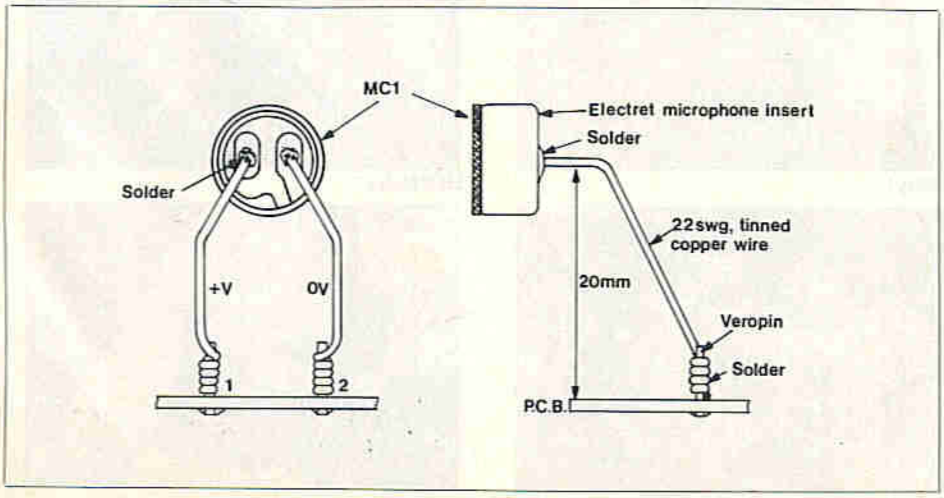

Figure 6. Mounting the electret microphone.

speech occurs at the shortest duration of recording and playback time, i.e. 5 seconds. If you have an oscilloscope or better still a frequency counter, this record and playback time can be determined by measuring the frequency of the signal at pin 19 of the UM5100 voice processor IC. The formula for working out the time is 8 divided by the frequency at pin 19, multiplied by the memory capacity in bytes, i.e. with 32k bytes of RAM and a frequency, at pin 19 of the UM5100 IC, of 19.21kHz, then the record and playback time is equal to (8/19.21kHz) x 32 x 1024 bytes = 13.65 seconds. To playback the speech recording, P10 will have to be taken momentarily to ground by connecting P10 to P9. Note that socket SK1 is only fitted when the optional EPROM programmer board is used.

Uses

The digital record and playback module has a variety of uses, including a burgler alarm in the home, a telephone answering system, in the car as an annunciator, in the office as an electronic message pad, and as a message system for the blind. Comments on other possible uses are invited from readers.

RECORD/PLAYBACK MODULE PARTS LIST

RESISTORS: All 0.6W 1% Metal Film			
R1,9,10,11,17,18, 28,29,31,32,35	10k	11	(M10K)
R2	33k	1	(M33K)
R3,12,15,16,26,27	47k	6	(M47K)
R4,5	1k	2	(M1K)
R6,8	12k	2	(M12K)
R7	270Ω	1	(M270R)
R23	3k3	1	(M3K3)
R13,33	220Ω	2	(M220R)
R14	220k	1	(M220K)
R20,21	100k	2	(M100K)
R19	4k7	1	(M4K7)
R22,25	27k	2	(M27K)
R34	100Ω	1	(M100R)
RV1	470k Hor. Encl. Preset	1	(UH08J)
RV2	4k7 Hor. Encl. Preset	1	(UH02C)
CAPACITORS			
C1	100nF Polylayer	1	(WW41U)
C2, 15	10nF Polylayer	2	(WW29G)
C3, 9, 16, 18	47µF 16V Minelect	4	(YY37S)
C4	100µF Minelect	1	(RA55K)
C5	470pF Ceramic	1	(WX64U)
C6	47nF Polylayer	1	(WW37S)
C7,8	4n7F Polylayer	2	(WW26D)
C10	33nF Polylayer	1	(WW35Q)
C11	10µF 16V Minelect	1	(YY34M)
C12,13,14	1µF 63V Minelect	3	(YY31J)
C17	6n8F Polylayer	1	(WW27E)
SEMICONDUCTORS			
TR1,2	BC547	2	(QQ14Q)
D1-5	1N4148	5	(QL80B)
IC1,2	LF442	2	(QY30H)
IC3	UM5100	1	(UJ48C)
IC4	74HC133	1	(UB30H)
IC5	62256	1	(UH40T)
RG1	µA78M05UC	1	(QL28F)
MISCELLANEOUS			
LD1	LED Red	1	(WL27E)
MC1	SUB Min Omni Insert	1	(FS43W)
	DIL Socket 8 Pin	2	(BL17T)
	DIL Socket 16 Pin	1	(BL19V)
	DIL Socket 28 Pin	1	(BL21X)
	DIL Socket 40 Pin	1	(HQ38R)
	Pin 2145	1 Pkt	(FL24B)
	Isobolt M3 × 6mm	1 Pkt	(BF51F)
	Isonut M3	1 Pkt	(BF58N)
	22 swg TC Wire	1 Reel	(BL14Q)
	PC Board	1	(GD88V)
	Constructors Guide	1	(XH79L)

A kit for the above project is available:
Order As LM80B (Rec/playbk Kit) Price £34.95
The following item is available separately:
Record/Playback PCB **Order As GD88V Price £6.95**

Phil cools it for charity!

Great Ormond Street Hospital Wishing Well appeal benefitted to the tune of £300 recently, when service department engineer Phil Cannadine came up with the 'Samson-like' idea of cutting off all of his hair for charity. Quite a hair-erasing notion considering winter winds are whistling round the corner! Local hair-dresser Alan Duke gave his services free of charge (and even donated £5 to the collection) and workmates looked on and cheered as Phil's locks fell away. The collection from friends and Maplin employees raised £215 which was boosted to £300 by the generosity of Maplin managing director Roger Allan. Well done Phil! When asked what his next fund-raising stunt would be, he said that he'd thought of having his legs shaved but he was worried about it going too far!!

Hairy!

Half Hairy!

Helping Hands!

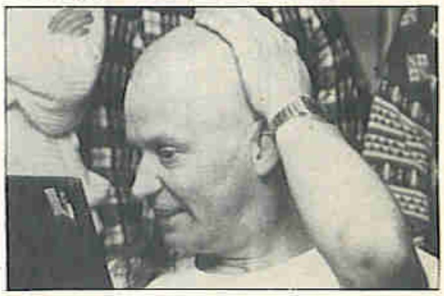

Hairless!

ORDER COUPON

Maplin ELECTRONICS

P.O. Box 3, Rayleigh, Essex SS6 8LR.
Telephone, Credit Card Sales (0702) 554161; Enquiries (0702) 552911.
A different postal code is correctly shown on the reply paid envelopes.

In any correspondence please quote your customer number. *Date* ....

Customer No ....
Name ....
Address ....
....
.... *Post Code* ....

IT IS MOST IMPORTANT THAT YOU INCLUDE YOUR POSTCODE

Block capital letters please. ***Keep a copy of your order.***

*Please enter catalogue page no. where item appears. If not in catalogue, write Mag for Magazine or SO for Special Offers etc. If not using 1989 catalogue, enter date of catalogue here: 19..........

Description (for your information only)	**Page***	**Order Code**					**Quantity**	**Price Each**	**£ Total**	**p**
Current Price List (Please write 1 in quantity, if required)		X	F	0	8	J		FREE	0	00
Price Change Leaflet (Please write 1 in quantity, if required)		C	A	9	9	H		FREE	0	00

VISA Access

Phone before 5pm for same day despatch.

American Express mapcard

Overseas customers including Channel Isles and Eire, please deduct VAT where applicable and tick this box.
Export Order ☐

Office Use Only

DOR	CQ	CA	PO
CNC	Total		
CNM			

I authorise you to debit my credit card account for the cost of goods despatched.

Credit Card Number ☐☐☐☐☐☐☐☐☐☐☐☐☐☐☐☐

Access/American Express/Mapcard/Visa/.......... Delete as required.

Note. Goods will be despatched only if the address above is the cardholder's address.
If ordering by Credit Card please sign:

....

Expiry date of Credit Card ....

		£	p
Total this sheet	£		
Total other sheet(s)	£		
Total for goods	**£**		
Handling Charge. If total for goods between £4.50 and £5, make total £5. If total less than £4.50, add 50p.			
Deduct value of Credit Note No .... Enclose the numbered Credit Note with this order.			
Please add 50p Carriage and Packing This amount must be added to each order placed.		0	50
Total	**£**		

NOW

6 ISSUES A YEAR!

There are 6 tremendous reasons why you should subscribe to Electronics – The Maplin Magazine

- ✻ Every issue is sent to you as soon as it's printed, post free.
- ✻ Packed with interesting and novel projects that you can build with all components easily available.
- ✻ Many features on electronics subjects to keep you up-to-date with latest developments.
- ✻ Minimum advertising space means more pages for you to read.
- ✻ Still far cheaper than the 'Monthlies', most of which are now £1.30 or more per issue.
- ✻ Six times a year means a 50% increase in articles and projects for you to read and build.

To subscribe just send a cheque/postal order for £6.00, made payable to Maplin Electronics, to P.O. Box 3, Rayleigh, Essex SS6 8LR. **OR** you can take advantage of our offer of two free issues by completing the coupon below and agreeing to pay by Credit Card or Direct Debit. The two free issues offer only applies if you use one of these two methods of payment. Simply fill in the 'Payment by Credit Card' or 'Payment by Direct Debiting Mandate' and return it to Maplin. Every time, about 1 month before your subscription is due, we will send you a letter giving details of the subscription rate for the next year and telling you the date on which we will charge your Credit Card or debit your bank account. If you do not wish to continue your subscription, you have until that date to let us know, and we will then cancel your authority to bill your Credit Card or cancel your mandate. Otherwise, if you do nothing, your subscription will continue. The authority or mandate you give us does not allow us to charge anything other than the Maplin Magazine subscription. The benefit to you is that you no longer need to remember to re-new your subscription or send off any more cheques or postal orders. Payment is made automatically.

✂ —

TAKE THE NEXT TWO ISSUES OF THIS MAGAZINE FREE!!

Because we're so certain that once you've seen the Maplin Magazine you'll want to continue to receive it, we're offering to send you the next two issues free of charge with absolutely no obligation to continue. Just fill in the details below and if after receiving two issues you do not wish to continue, just let us know at least one month before the next issue is due and we will cancel your subscription. The two free issues will be yours to keep whatever you decide. If you already have a subscription, fill in the details below and we'll add two issues free of charge to your current subscription. SEND NO MONEY NOW. About 2 weeks before the third issue is due, we will charge you £6.00 for the next six issues, unless you have cancelled. This offer is not available to those already paying by Direct Debit or Continuous Credit Card or those who have stopped payment by either method within the last two years. Please start my subscription with issue 31.

★ PLEASE ADD YOUR ADDRESS, SEE BOTTOM RIGHT ★

PAYMENT BY CREDIT CARD. Please charge my Credit Card Account Access ☐ Visa ☐ American Express ☐ Mapcard ☐

I authorise you until further notice in writing to debit my CREDIT CARD account with £6.00 and in future, with any amounts which, after notification, MAPLIN ELECTRONICS PLC may debit thereto in respect of my subscription to the Maplin Magazine.

Account No.

Signature

Date

OR

PAYMENT BY DIRECT DEBITING MANDATE in favour of Maplin Electronics plc, P.O. Box 3, Rayleigh, Essex SS6 8LR.
Direct Debit payment option is only open to customers with bank accounts in the UK including Channel Isles, Isle of Man and N. Ireland.
Please note: Instructions cannot be accepted to charge Direct Debits to a Deposit or Savings Account.

Bank Sort Code

Bank Account Number

Name of Account to be debited

The Manager

I authorise you until further notice in writing to charge my account with you any amounts which MAPLIN ELECTRONICS PLC may debit thereto by Direct Debit in respect of my subscription to the Maplin Magazine.

I will inform the bank in writing if I wish to cancel this instruction.

I understand that if any direct debit is paid which breaks the terms of this instruction, the bank will make a refund.

Signature

Date

Enter your address and Maplin customer number, if known.

Post Code

DID YOU MISS THESE ISSUES?

Also see page 79

Project Book 1 Universal Timer. Programmable mains controller. **Combo-Amplifier.** 120W MOSFET power amp. **Temperature Gauge.** 10°C - 100°C, LED readout. **Pass The Bomb!** Pass-The-Parcel with a difference. **Six easy-to-build Projects on Veroboard.** Car batt. monitor; Colour snap game; CMOS Logic Probe; Peak Level meter; Games timer; Multi-colour pendant.
Order As XA01B (Maplin Project Book No. 1) Price £1.00 *NV*.

Project Book 2 Digital Multi-Train Controller. Controls up to 14 model trains. **Home Security System.** Six independant channels. **Digital MPG Meter.** With large LED display, a must for more economical motoring.
Order As XA02C (Maplin Project Book No. 2) Price £1.00 *NV*.

Project Book 3 ZX81 Keyboard. 43 keys, plugs directly into ZX81 with no soldering. **Stereo 25W MOSFET Amp.** 25W r.m.s per channel; Disc, Tape, Tuner & Aux. **Radar Intruder detector.** 20 metres range, may be used with our security system. **Remote Control for Train Controller.** Remote control by infra-red, radio or wire.
Order As XA03D (Maplin Project Book No. 3) Price £1.00 *NV*.

Project Book 4 Telephone Exchange. Up to 32 extensions on 2-wire lines. **Remote Control for Amplifier.** Volume, balance and tone controlled via infra-red link. **Frequency Counter.** 8 digit DFM, 10Hz - 600MHz range. **Ultrasonic Intruder Detector.** Areas up to 400 square feet can be covered.
Order As XA04E (Maplin Project Book No. 4) Price £1.00 *NV*.

Project Book 5 Modem. 300 baud transmission speed over normal telephone lines. **Inverter.** 240V AC 60W from 12V car battery. **ZX81 Sound Generator.** 3 tone generators fully controlled from BASIC. **Central Heating Controller.** Optimised performance with this advanced system. **External Horn Timer.** Exterior intruder alarm. **Panic Button.** Add on to our Home Security System. **Model Train Projects.** Add on to our Multi-Train Controller. **Interfacing Micro processors.** How to use parallel I/O ports, with circuits.
Order As XA05F (Maplin Project Book No. 5) Price £1.00 *NV*.

Project Book 6 VIC20 & ZX81 Talkbacks. Speech synthesis projects. **Scratch Filter.** Tunable active circuit 'reclaims' scratched records. **Bridging Module.** Converts two 75W MOSFET amps to one 400W full bridge amplifier. **Moisture Meter.** Finds damp in walls and floors. **ZX81 TV Sound and Normal/Inverse Video.** TV sound and inverse video direct. **Four Simple Veroboard Projects.** Portable Stereo Amp; Sine Generator; Headphone Enhancer and Stylus Organ.
Order As XA06G (Maplin Project Book No. 6) Price £1.00 *NV*.

Project Book 7 CMOS Crystal Calibrator. For amateur radio receiver calibration. **DX'er's Audio Processor.** Improved sound from Comm-unications Receivers. **Enlarger Timer.** An accurate timer for the darkroom. **Sweep Oscillator.** Displays AF frequency response on an oscilloscope screen. **VIC20 and ZX81 Interfaces.** RS232 compatable.
Order As XA07H (Maplin Project Book No. 7) Price £1.00 *NV*.

Project Book 8 Spectrum Modem/RS232 Interface. 2400 baud self contained operating system. **Synchime.** Simulates bells, gongs and other chiming sounds. **Dragon 32 RS232/Modem Interface.** Plugs into ROM expansion port. **Codelock.** Programmable electronic lock. **CMOS Logic Probe.** Digital display shows logic states. **Minilab Power Supply.** Versatile unit for the test bench. **Dragon 32 I/O Ports.** Two 8-bit ports. **Doorbell for The Deaf.** Flashing lamp attracts attention.
Order As XA08J (Maplin Project Book No. 8) Price £1.00 *NV*.

Project Book 9 Spectrum Keyboard. 47 full travel keys. **VIC Extendiboard.** Three expansion ports, one switchable. **Oric Talkback.** Speech synthesiser for the Oric 1. **TDA7000 FM Radio.** Complete FM receiver on a chip. **ZX81 High Resolution Graphics.** 256 x 192 fine pixel display. **Nine Projects!** Personal Stereo Dynamic Noise Limiter; Logic Pulser; TTL/RS232 Converter; Pseudo Stereo AM Radio; and more.
Order As XA09K (Maplin Project Book No. 9) Price £1.00 *NV*.

Project Book 10 Spectrum Easyload. Helps cassette loading with the Spectrum. **80m Receiver.** Simple SSB direct conversion receiver. **Fluorescent Tube Driver.** 8W 12V for camping and caravanning. **Auto-Waa.** Automatic waa-waa effects unit. **Digi-Tel Expansion.** Expands Maplin Telephone Exchange to 32 extensions. **Oric 1 Modem Interface.** Adapts the Oric 1 to the Maplin Modem. **Dragon 32 Extendiport.** Makes the Dragon's cartridge socket more accessible.
Order As XA10L (Maplin Project Book No. 10) Price £1.00 *NV*.

Project Book 11 Mapmix. Six channel audio mixer. **Xenon Tube Driver.** Xenon flash tube module with strobe. **Enlarger Exposure Meter.** Simple inexpensive tool for the darkroom. **8 Channel Fluid Detector.** Check/control fluid level in up to 8 containers. **Servo & Driver Module.** Servo mechanism with driver module kit. **Mk II Noise Reduction Unit.** Improves signal/noise ratio of tape recordings. **Cautious Ni-Cad Charger.** Controlled charging of ni-cad cells. **Motherboard for The BBC Micro.** Gives easy access to ports.
Order As XA11M (Maplin Project Book No. 11) Price £1.00 *NV*.

Project Book 12 RTTY Unit. The TU1000 receives/transmits Radio Teletype; connects to computer via RS232. **Computadrum.** Use your computer as a drum synthesiser. **Light Pen.** Draw onto the TV screen or select menu options. **PWM Motor Drive.** Reversible model motor driver for 6V and 12V.
Order As XA12N (Maplin Project Book No. 12) Price £1.00 *NV*.

Project Book 13 Explosive Gas Alarm. Flammable gas detector. **Flash Meter.** Get your exposure right when using your flash gun. **Musical Announcer.** A doorbell with a difference. **Mains Controller.** An add-on for the 8-Channel Fluid detector.
Order As XA13P (Maplin Project Book No. 13) Price £1.00 *NV*.

Project Book 14 Live Wire Detector. Invaluable aid for the handyman. **Trundle.** The line follower robot as featured on Channel 4. **4-Channel PWM Controller.** Digital control of motors and servos. **Display Driver Module.** How to use our LED bargraph display ICs. **Control-A-Train.** Full inertia control of model trains. **Spectrum I/O Controller.** Buffered 2-way 8-bit data bus and 8 control lines.
Order As XA14Q (Maplin Project Book No. 14) Price £1.00 *NV*.

Project Book 15 Z80 CPU Module. Expandable CPU based controller. **Sharp MZ-80K Serial Interface.** Get into communications with this project. **Ultrasonic Car Alarm.** Stop car thieves. **Active Crossover.** Includes matched output power amplifiers. **Guitar Equaliser.** Specifically for six string electric guitars. **Fabulous Five.** A selection of interesting circuits.
Order As XA15R (Maplin Project Book No. 15) Price £1.00 *NV*.

Project Book 16 Floodlight Controller. Both power supply and mains switching unit for the Infra-red Intruder Detector Kit. **Spectrum Parallel/Serial Interface.** Provides 8-bit I/P and O/P parallel or serial transfer with programmable UART. **Mains Tx/Rx Data Communications System.** Sends or receives data via the mains wiring. **16-Channel Logic IC Tester.** Simultaneously displays logic states for any logic IC of up to 16 pin-outs on your oscilloscope.
Order As XA16S (Maplin Project Book No. 16) Price £1.00 *NV*.

Project Book 17 Video Digitiser. Interface a TV camera to your computer. **Mixing It.** A comprehensive range of audio amplifier modules. **Hobbyist's Temperature Controller.** General purpose electronic mains power thermostat. **ASCII Keyboard.** Professional computer keyboard with standard ASCII output. **Play Along Mixer.** Play along to your favourite records and tapes on your own instrument.
Order As XA17T (Maplin Project Book 17) Price £1.00 *NV*.

Project Book 18 Weather Satellite Receiver. Display regional weather systems on your TV or monitor. **Mixing It Part 2.** Mono/stereo Hi–Z mic input, mixer and line amplifiers; VU/headphone driver. **Stepper Motor Driver.** How to build and start using the Stepper Motor Kit featured in the Catalogue. **Amstrad Expansion System.** The Maplin Amstrad External ROM Card System for the CPC 464, CPC 664 and 6128. **Sealed Lead Acid Battery Charger.** Special high stability output with automatic trickle charge mode for sealed lead acid batteries. **Fantastic Five.** Veroboard projects comprising HF tremelo unit, crystal checker, clap switch, low–Z ohmmeter, snooze timer.
Order As XA18U (Maplin Project Book 18) Price £1.00 *NV*.

Project Book 19 Active Aerial and Aerial Tuning Unit. Get more from SW. **Amstrad Expansion System.** 6 x 8-bit parallel I/O card and PSU. **ADA Digital Echo.** RAM based low cost echo machine. **Mixing It.** Mixer Modules' PSU.

Order As XA19V (Maplin Project Book No. 19) Price £1.00 *NV*.

Project Book 20 Weather Satellite Decoder. Displays output from Satellite Receiver on TV or monitor. **Infra Red Proximity Detector.** Short range heat or movement detector. **Fibre-Optic Link.** Sends AF signals over up to 20m of fibre-optic cable. **Low-Z Microphone Pre-amp.** For 200-600Ω mics plus gain adjustment.
Order As XA20W (Maplin Project Book 20) Price £1.00 *NV*.

Electronics Issue 21 6 Channel Burglar Alarm. Develop a complete security system. **Six Circuits.** Bass Fuzz, Voice-Over Unit, Noise Gate, Envelope Tremolo, RTTY Decoder and Scratch & Rumble Filter on veroboard. **Notch Filter.** AF processor for communications receivers. **12V Public Address System.** 10W per channel from car battery. **Tungsten Lamp Controller.** AC phase control for mains lamps.
Order As XA21X (Maplin Magazine Volume 6 Issue 21) Price 85p *NV*.

Electronics Issue 22 MIDI Interfacing Techniques. Connect MIDI instruments to the VIC20 or CBM64. **Hi-Fi Speakers & Enclosures.** Two high quality loudspeaker cabinet designs. **Keypad for Z80 CPU.** At last a keypad I/F & ROM for the Z80 CPU kit. **4½ Digit Counter.** Versatile basic counter module to 4½ digits. **Weather Satellite Down Converter Part 1.** Aerial & freq. converter for MAPSAT Receiver to tune into the Meteosat satellite. **Mini Circuits.** Veroboard Audio Level Tester, Sound Triggered Flash, In-Circuit Resistance Meter, L/R Audio Isolator.
Order As XA22Y (Maplin Magazine Volume 6 Issue 22) Price 85p *NV*.

Electronics Issue 23 MAPSAT Frame Store #1. Z80B CPU controller. **Servo Tester.** Proportional servo tester. **Weather Satellite Down Converter Part 2.** Channel Switching Unit. **Capacitance Tester.** 5 ranges, 3 digit display. **More Mini Circuits.** Movement alarm, Stepper Motor Driver, Pink Noise Generator, Optical Port Data Link, 'Metal Pedal'.
Order As XA23A (Maplin Magazine Volume 6 Issue 23) Price 85p *NV*.

Electronics Issue 24 Nuclear Radiation Monitor. Alpha, Beta, Gamma & X-ray gieger counter. **VHF Pre-Amp Module.** MAPSAT VHF pre-amp. **External Horn Programmable Timer Update.** Modifying the module for use with other than the Maplin Home Security System. **MAPSAT Frame Store #2.** The Video Graphics Card. **VHS Video Alarm.** Battery powered portable movement alarm built into a VHS Video Cassette.
Order As XA24B (Maplin Magazine Volume 6 Issue 24) Price 85p *NV*.

Electronics Issue 25 Track side Rapid Charger. Model radio control car ni-cad battery pack charger using 12V car battery as power source. **Slow Charger.** Mains powered trickle charger for model cars. **Temperature Module Expansion.** Relay switch board and serial to parallel converter add-ons. **Disco Partylite.** High quality, 3 channel party lights. **Mini Metal Detector.** Detects ferrous and some non-ferrous metals such as iron wall board nails or brass screws. **Tester for Electrical Domestic Appliances.** Check the safety of any new appliance before you plug it into the mains. **Bob's Mini Circuits.** A pulsed speed controller, a train controller & an electronic lock.
Order As XA25C (Maplin Magazine Volume 7 Issue 25) Price 85p *NV*.

Electronics Issue 26 1kW High Power Mosfet Amplifier. Superb amp primarily aimed at use in halls, auditoriums, etc. **Simple Melody Generator.** Versatile musical project with four tunes available. **Multi-Tune Generator.** Built around the UM3411A giving 16 tunes etc. **Siren Sound Generator.** Gives 4 different types of siren noises. **Programmable Metronome.** Useful musicians aid.
Order As XA26D (Maplin Magazine Volume 7 Issue 26) Price 85p *NV*.

Electronics Issue 27 TDA 7000 FM Radio MkII. Complete radio kit including case. **3-Way Loudspeaker System.** 20 litre passive radiator cabinet design. **Watt Watcher.** Check to see if you are overdriving your speakers. **Morse Code Practice Oscillator.** Learn Morse Code the practical way with this excellent project. **Noise Generator.** Make as much noise as you want with this useful piece of test gear. **Bob's Mini Circuits.** Stereo Bargraph, Stereo VU Meter, Simple Fibre-optic link, Serial-Parallel converter and a Games Timer.
Order As XA27E (Maplin Magazine Volume 7 Issue 27) Price 85p *NV*.

Electronics Issue 28 Direct Conversion Receiver. Listen to speech or morse code from 10 metres to 160 metres. **2 Way 16 litre Loudspeaker System.** Another in our series of popular loudspeaker cabinet designs. **Bob's Mini Circuits.** A MIDI thru box, a capacitance meter adaptor, a crystal calibrator and a transistor tester.
Order As XA28F (Maplin Magazine Volume 7 Issue 28) Price 85p *NV*.

Electronics Issue 29 1kW High Power Mosfet Amplifier Hardware. Round off this super project from Issue 26 by 'boxing up' the unit. **Electronic Roulette Wheel.** Super fun project for the whole family. **Laser and Controller.** Marvellous 2mW laser with PSU and a motorised mirror add-on unit with controller. **TEA2000 PAL Colour Encoder.** Building block project based on the TEA2000 chip. **Data File: LM386.** In depth look at this useful low voltage power amplifier.
Order As XA29G (Maplin Magazine Volume 8 Issue 29) Price £1.00 *NV*.

Superb Triple-Trace 20MHz Oscilloscope

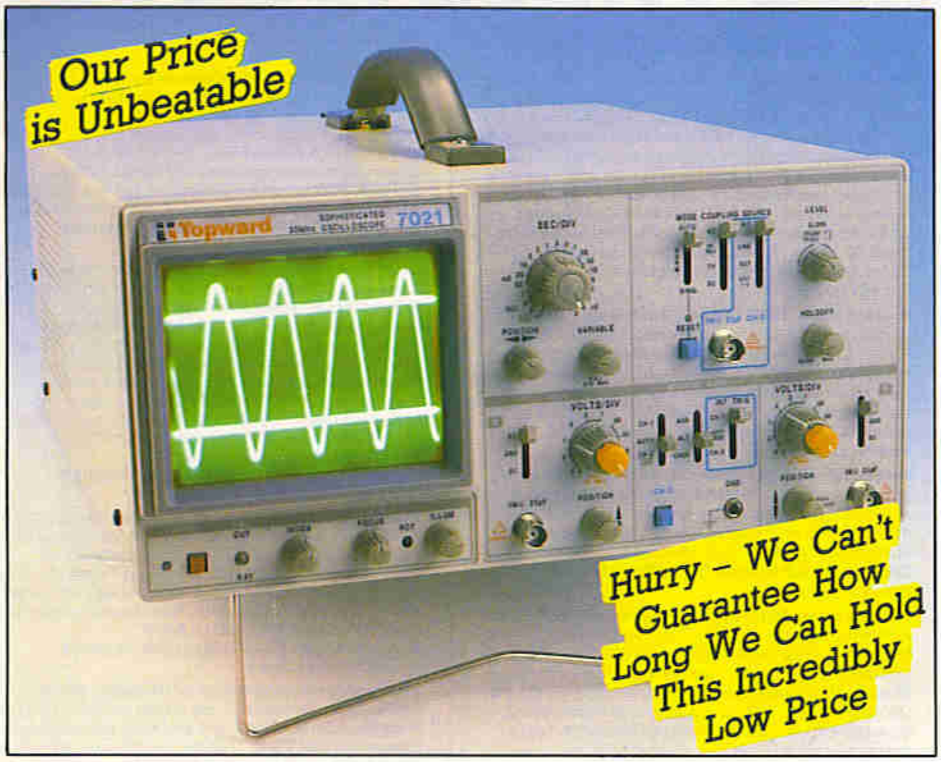

Precision laboratory oscilloscope.
3 Channels – 3 Trace.
Sensitive vertical amplifier 1mV/div allows very low level signals to be easily observed.
150mm rectangular CRT has internal graticule to eliminate parallax error.
X-Y mode allows Lissajous patterns to be produced and phase shift measured.
TV sync separator allows measurement of video signals.
20ns/div sweep rate makes fast signals observable.
Algebraic operation allows sum or difference of Channel 1 and 2 to be displayed.
Stable triggering of both channels even with different frequencies is easy to achieve.
50mV/div output from Ch 1 available to drive external instrument e.g. frequency counter.
A hold-off function permits triggering of complex signals and aperiodic pulse waveforms.

ONLY

£287.49

XJ61R

40MHz Triple-Trace Oscilloscope

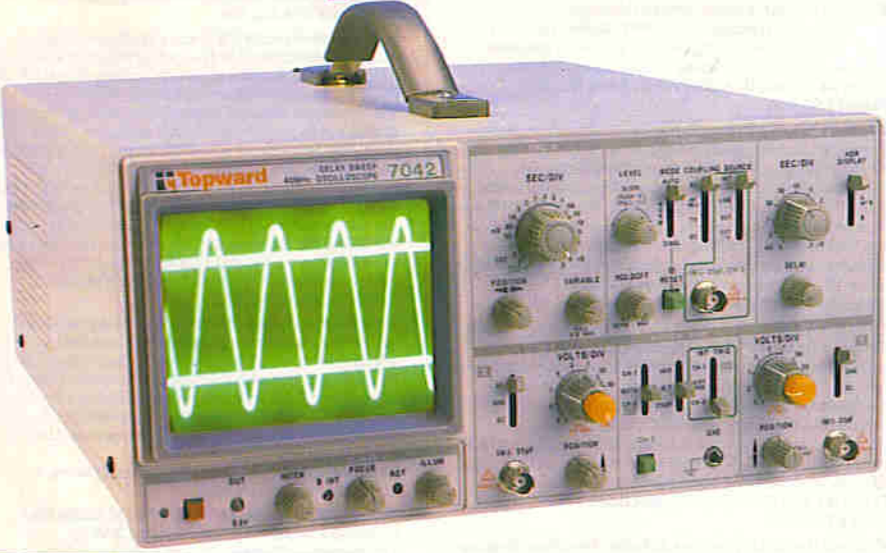

As above, but with 40MHz bandwidth and super bright 12kV tube even at the highest frequencies. This instrument also has a delayed sweep time base to provide magnified waveforms and accurate time interval measurement. Truly superb precision instrument.

Includes VAT & Carriage As Well!

ONLY

£499.95

XJ60Q

Order Coupon		Send to P.O. Box 3, Rayleigh, SS6 8LR	
Qty.	Description	Code	Price
		Add carriage	50p
		Total	

Name .... Total

Address ....

.... Post Code ....

I authorise you to debit my Credit Card account for the cost of goods despatched.

Card No. ☐☐☐☐☐☐☐☐☐☐☐☐☐☐☐☐☐

Access, Amex, Visa .... delete as required.

If ordering by Credit Card please sign ....

Expiry date of Credit Card ....

/// Maplin ELECTRONICS

P.O. Box 3, RAYLEIGH, ESSEX SS6 8LR.

VISA Access AMERICAN EXPRESS map

PHONE BEFORE 5PM FOR SAME DAY DESPATCH **0702 554161**

ALL PRICES INCLUDE VAT.

All items subject to availability. Subject to availability both items will be on sale in our shops in Birmingham, Bristol, Leeds, London, Manchester, Nottingham, Southampton and Southend-on-Sea.

4 WAY SPEAKER SWITCH

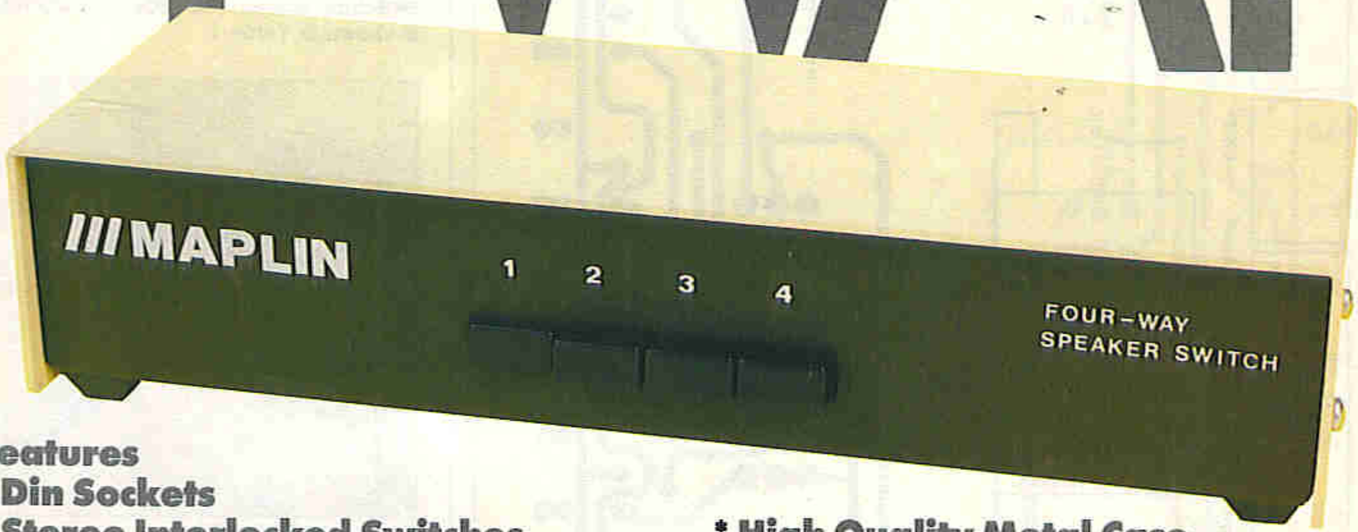

Features

- **Din Sockets**
- **Stereo Interlocked Switches**
- **Fuse Protection on both Channels**
- **High Quality Metal Case and Fibre Glass PCB**

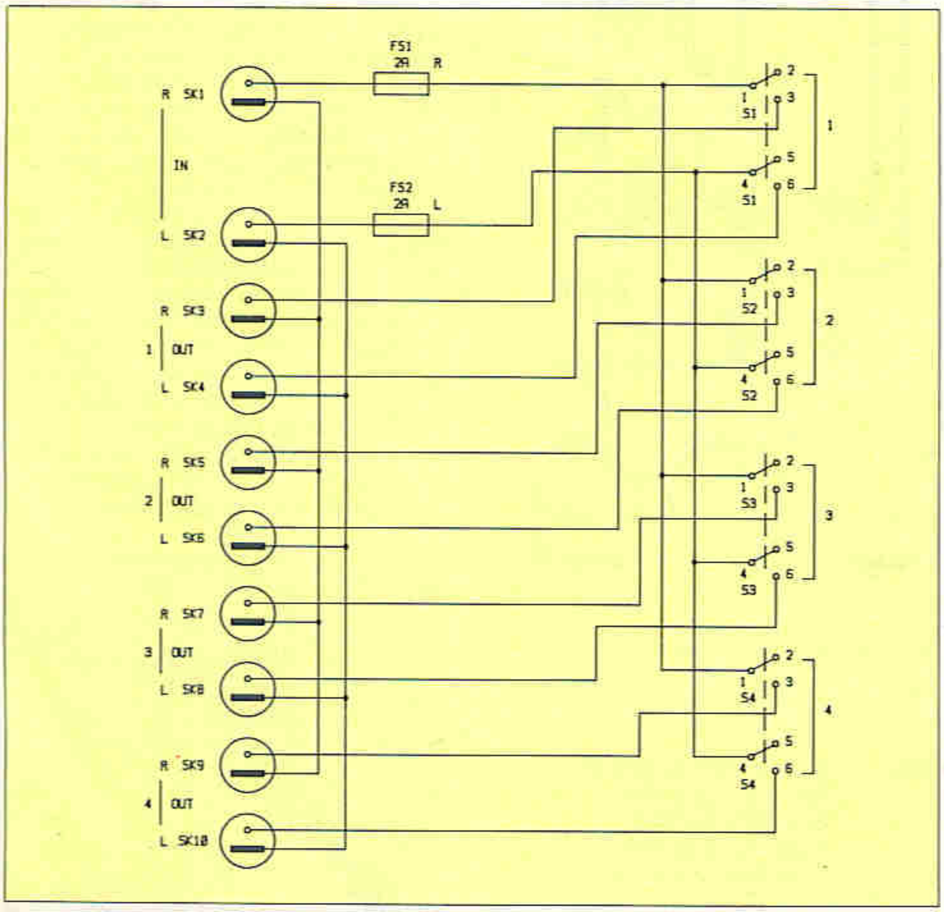

Figure 1. Circuit.

by Chris Barlow

Introduction

This four way speaker switch was developed for use on domestic Hi-Fi units not exceeding 45 watts output power. The switch can be used to compare the performance between differing sets of speakers, or to direct the output of your Hi-Fi to another room in the house. Under certain conditions it is possible to switch in more than one pair of speakers, but you must check with your amplifier specifications before doing so. This is because the more speakers that are switched in the greater the total load presented to the amplifier, your Hi-Fi manual should state the minimum permissible load impedance. The speaker switch contains its own fuse protection, so if the worst should happen your Hi-Fi should not be adversely affected.

Specifications of Prototype

Maximum Power Input: 45W rms
Minimum Speaker Impedance: 4Ω
Switch Action: Break before make
Switch Life: 50,000 cycles
Fuse Rating: 2A

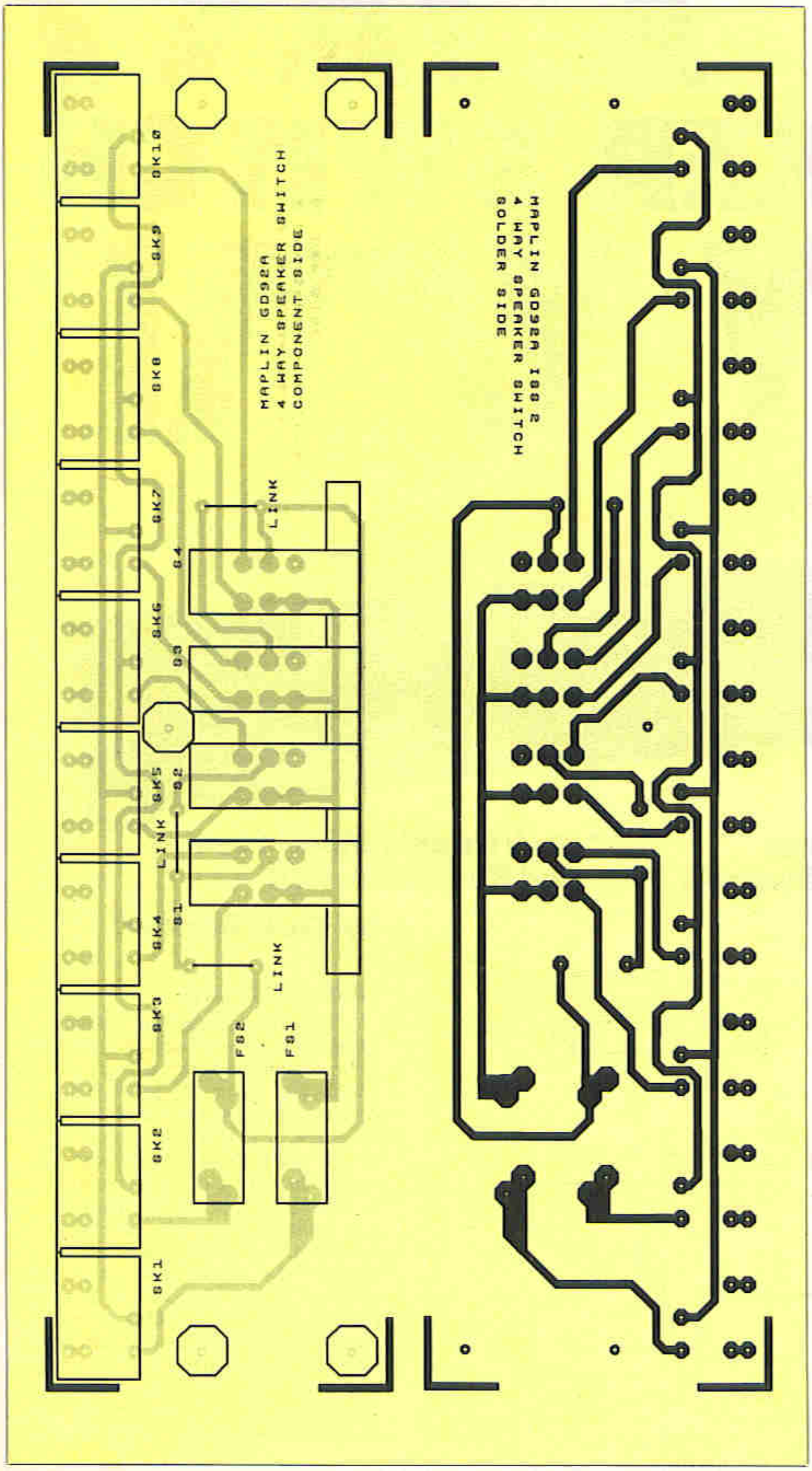

Figure 2. PCB layout.

Stereo speaker input	Switch pushed in	Stereo speaker output
Right-SK1, Left-SK2	S1	Right-SK3, Left-SK4
Right-SK1, Left-SK2	S2	Right-SK5, Left-SK6
Right-SK1, Left-SK2	S3	Right-SK7, Left-SK8
Right-SK1, Left-SK2	S4	Right-SK9, Left-SK10

Table 1. Switching sequence.

Circuit Description

The speaker switch has two inputs, SK1 the right channel and SK2 the left channel. The signal, or live pin of each DIN socket, is taken to one end of the fuses, FS1 and FS2. The other, larger, ground terminal is connected to the same ground points on the left and right output sockets, see Figure 1.

Once the stereo signals have passed through the 2A fuses they are then directed to the output sockets, SK3 to SK10 by the setting of the interlocking push-button switches, S1 to S4. Each switch has two sets of silver plated contacts to accommodate the stereo switching action. The order of switching is shown in Table 1.

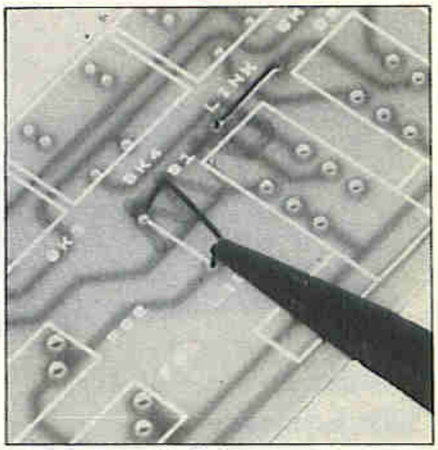

Photo 1. Fitting the links.

PCB Assembly

The PCB is a single-sided fibre glass type, chosen for maximum reliability and mechanical stability. Removal of a misplaced component is quite difficult, so please double-check each component before soldering! The PCB has a printed legend to assist you in correctly positioning each item, see Figure 2.

The sequence in which the components are fitted is not critical. However, the following instructions will be of use in making these tasks as straightforward as possible. Start by preparing and fitting the three wire links, see Photograph 1. If you purchase the kit of this project it will contain a short length of 20 swg tinned copper wire for this purpose.

Next install and solder the four fuse clips at FS1 and FS2 positions, see Photograph 2. Once this is done the two

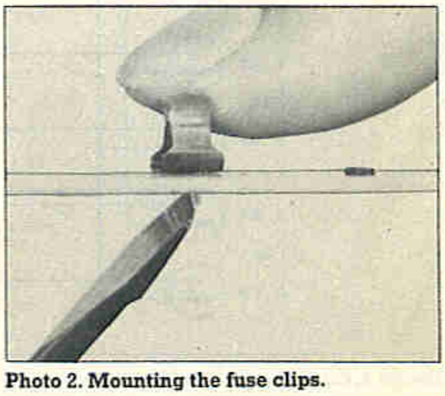

Photo 2. Mounting the fuse clips.

fuses can be pushed into place. When fitting the speaker DIN sockets, SK1 to SK10, make certain that they are pushed down firmly on to the surface of the PCB.

Before mounting the push switches S1 to S4 they must first be prepared for non-locking action and fixed to the four way latch bracket, see Photographs 3 to 9. Having completed this assembly you must test the interlocking action of the switches BEFORE fitting them to the PCB. DO NOT fit the four push buttons onto the switch mechanism at this stage.

This completes the assembly of the PCB and you should now check your work very carefully making sure that all the solder joints are sound. It is also very important that the solder side of the circuit board does not have any trimmed component leads standing proud by more than 3mm, as this may result in a short circuit. Further information on soldering and assembly techniques can be found in the 'Constructors Guide' included with the kit. Photograph 10 shows the completed PCB assembly in clear detail.

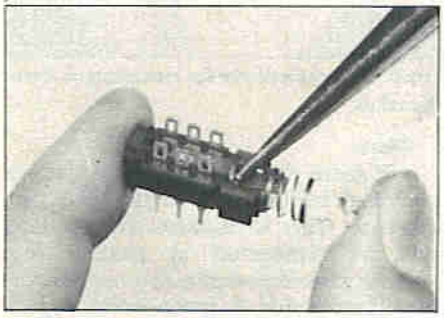

Photo 3. Remove the retaining clip keeping the spring loaded plunger pushed-in.

Testing

To make the following tests you will require a multimeter set to its resistance range, or a continuity tester.

Abbreviations:

S1 = Switch 1 pushed in (S1 to S4)
SK1 = Two pin DIN Speaker socket (SK1 to SK10)
RD = Round hole in socket
RCT = rectangular hole in socket
SC = Short circuit (Low resistance)
OC = Open circuit (High resistance)

Socket and Switch Assignments:

SK1 = Right channel input (Output of Hi-Fi)
SK2 = Left channel input (Output of Hi-Fi)
SK3 = Right channel output 1 (Switch 1 pushed in)
SK4 = Left channel output 1 (Switch 1 pushed in)
SK5 = Right channel output 2 (Switch 2 pushed in)
SK6 = Left channel output 2 (Switch 2 pushed in)
SK7 = Right channel output 3 (Switch 3 pushed in)
SK8 = Left channel output 3 (Switch 3 pushed in)
SK9 = Right channel output 4 (Switch 4 pushed in)
SK10 = Left channel output 4 (Switch 4 pushed in)

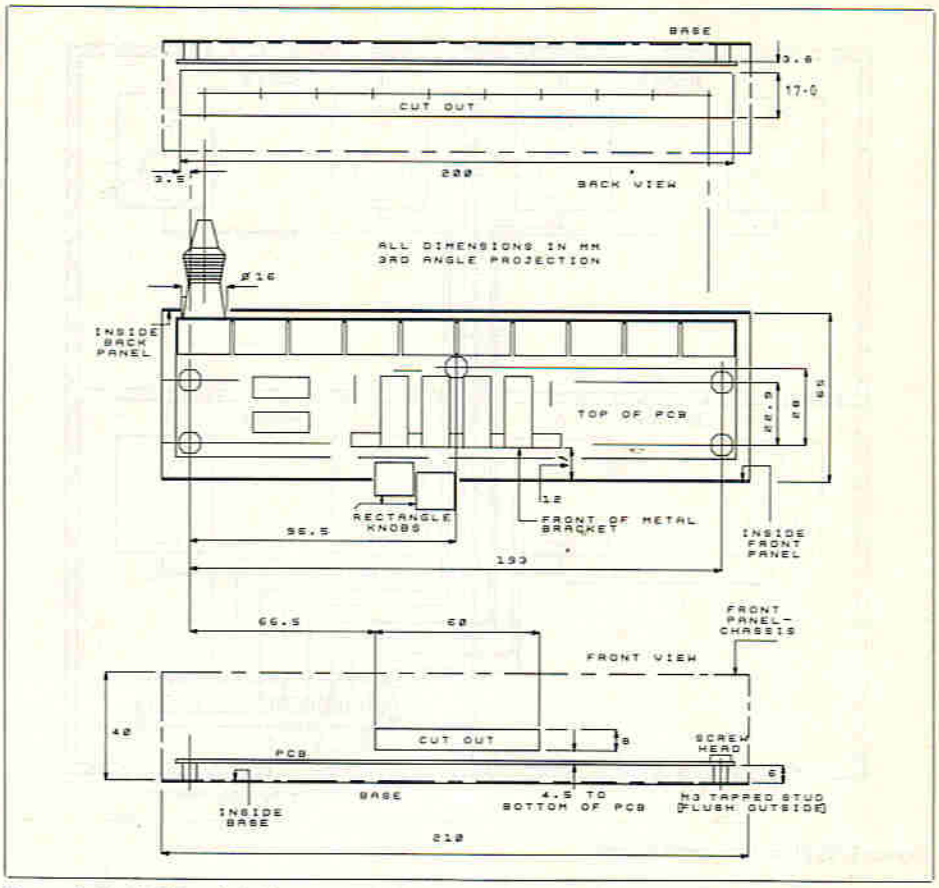

Figure 3. Box drilling details.

Tests:

S1 or S2 or S3 or S4, SK1 RD to SK1 RCT = OC
S1 or S2 or S3 or S4, SK2 RD to SK2 RCT = OC
S1, SK1 RD to SK3 RD = SC
S1, SK2 RD to SK4 RD = SC
S2, SK1 RD TO SK5 RD = SC
S2, SK2 RD TO SK6 RD = SC
S3, SK1 RD TO SK7 RD = SC
S3, SK2 RD TO SK8 RD = SC
S4, SK1 RD TO SK9 RD = SC
S4, SK2 RD TO SK10 RD = SC
SK1 RCT to SK3 RCT or SK5 RCT or SK7 RCT or SK9 RCT = SC
SK2 RCT to SK4 RCT or SK6 RCT or SK8 RCT or SK10 RCT = SC
SK1 RCT to SK2 RCT = OC
Test completed.

Final Assembly

The finished unit is housed in a specially manufactured box (Maplin code YT63T). However, if you wish to make up your own box, drilling details and panel markings are given in Figure 3. Included in the Maplin box is a set of stick-on feet, four self-tapping screws and five 6mm PCB spacers.

Ensure that the spacers are in position on all five of the M3 tapped studs inside the box, see Figure 3. Next present the PCB assembly at an angle to the box and position it onto the five fixing points, see Photograph 11. Using five M3 nuts secure the PCB inside the box and then push onto the switch plungers the four black rectangular buttons, see Photograph 12. If all is well, fix the lid using the screws provided with the box and finally stick on the four rubber feet. The unit is now ready for use.

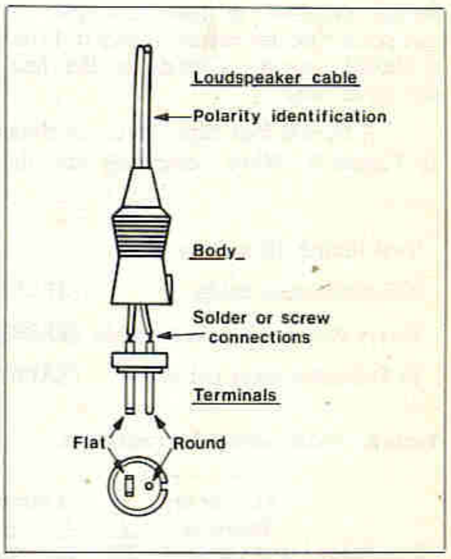

Figure 4. 2 pin speaker plug wiring.

Using the Switch

The first task is to prepare two interconnecting cables to run between your Hi-Fi and the speaker switch. It is of GREAT importance that the phasing of the speakers is maintained throughout the switch system and it is for this reason that *all* the cables must have a marker to identify the correct phase (polarity), see Figure 4. For example, if you have decided you will use the round pin on the identified wire, you must maintain this convention for all the other interconnect-

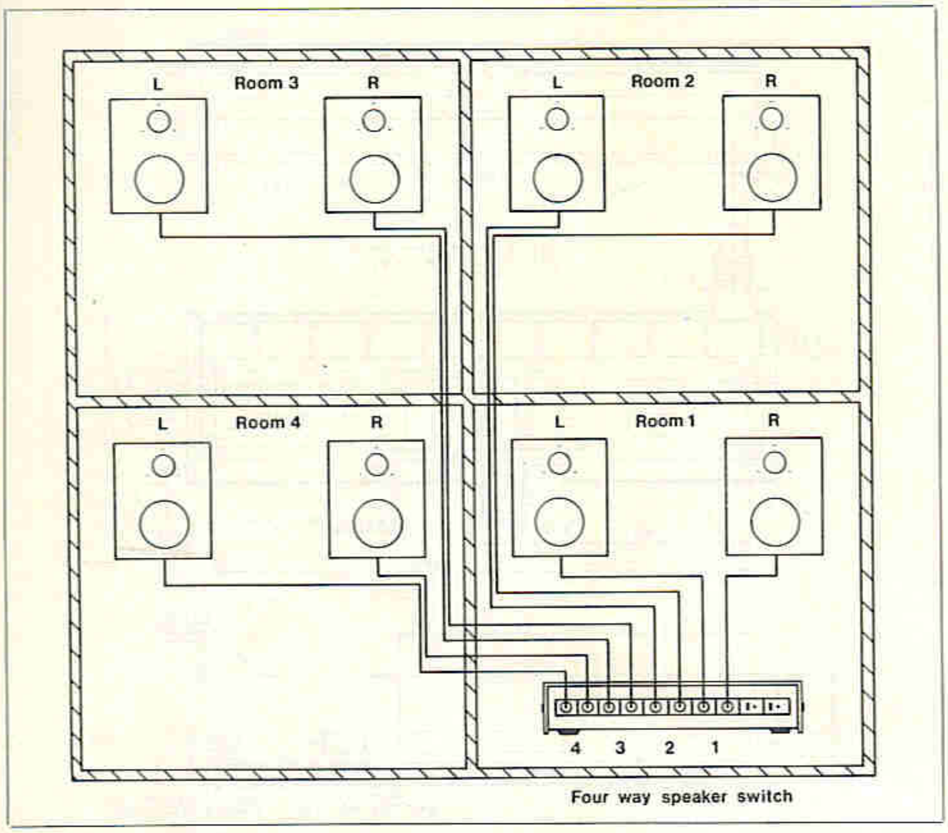

Figure 5. Typical four room layout.

ing cables. The grade of speaker cable you choose will be dependant upon the length required to feed any pair of speakers. The test results shown in Table 2 should provide a guide to the final choice of cable.

A typical four room layout is shown in Figure 5. When using the unit the following should be avoided:

1. DO NOT switch the unit at loud volume settings.
2. DO NOT push in more than one button at a time (see note).
3. DO NOT exceed the maximum power rating of the unit (45W rms).

Test length 10 metres			**Comment**
ZIP connecting cable	(XR39N)	= 1.01Ω	Low power, maximum run 5m
Heavy duty loudspeaker cable	(XR60Q)	= 0.25Ω	Full power, maximum run 15m
Hi-Fi loudspeaker cable	(XR72P)	= 0.13Ω	Full power, maximum run 30m

Table 2. Loudspeaker cable resistance.

Impedance	Number of Speakers per Channel	Formulae $\frac{1}{RT} = \frac{1}{R1} + \frac{1}{R2} + \frac{1}{R3} + \frac{1}{R4}$	Total Load	Recommendation
16Ω	1		16Ω	Check your Amplifier Specification
	2	$\frac{1}{16} + \frac{1}{16}$	8Ω	
	3	$\frac{1}{16} + \frac{1}{16} + \frac{1}{16}$	5.3Ω	
	4	$\frac{1}{16} + \frac{1}{16} + \frac{1}{16} + \frac{1}{16}$	4Ω	
8Ω	1		8Ω	Check your Amplifier Specification
	2	$\frac{1}{8} + \frac{1}{8}$	4Ω	
	3	$\frac{1}{8} + \frac{1}{8} + \frac{1}{8}$	2.6Ω	Not Recommended
	4	$\frac{1}{8} + \frac{1}{8} + \frac{1}{8} + \frac{1}{8}$	2Ω	
4Ω	1		4Ω	Check your Amp Spec.
	2	$\frac{1}{4} + \frac{1}{4}$	2Ω	Not Recommended
	3	$\frac{1}{4} + \frac{1}{4} + \frac{1}{4} + \frac{1}{4}$	1.3Ω	
	4	$\frac{1}{4} + \frac{1}{4} + \frac{1}{4} + \frac{1}{4}$	1Ω	

Table 3. Connecting speakers in parallel.

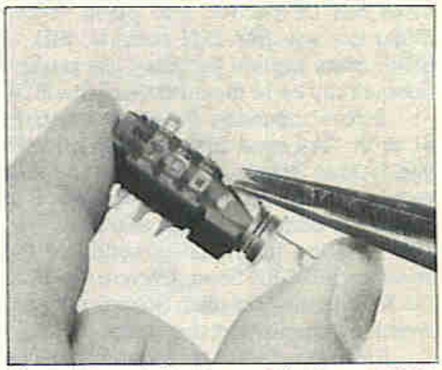

Photo 4. Insert plastic non-latching retainer.

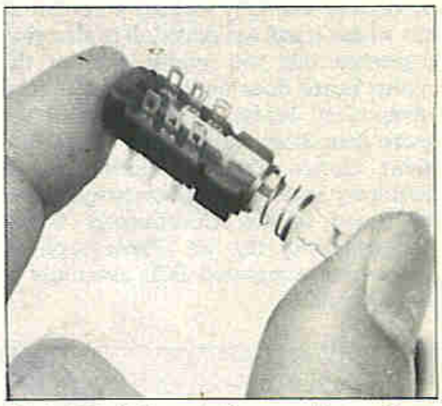

Photo 5. Switch ready for mounting on 4 way bracket.

Note:

If more than one set of speakers is switched in, the load to the Hi-Fi will increase. This is because the speakers will be connected in parallel thus reducing the impedance presented to the amplifier. Table 3 gives some typical values and recommendations for use with your amplifier.

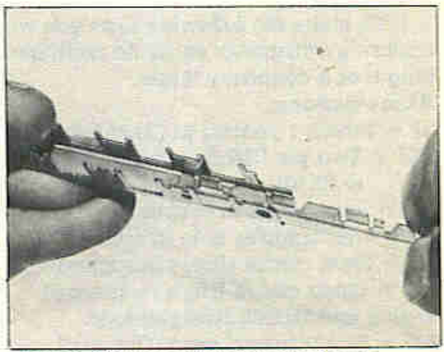

Photo 6. Slide reset bar into the 4 way bracket (note orientation).

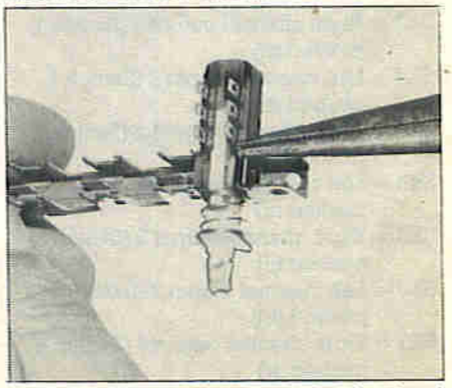

Photo 7. Fit first switch and leafspring, bend fixing lugs to hold in position.

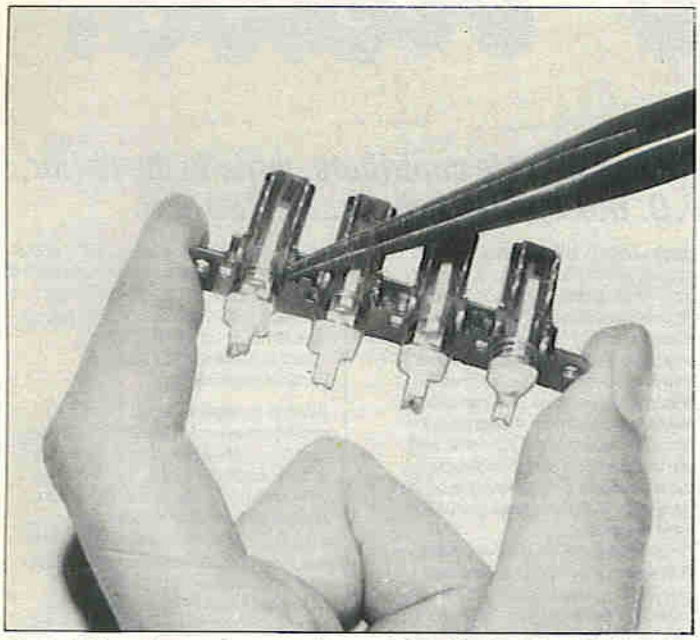
Photo 8. Repeat procedure on other switches (leafspring only fitted on first switch).

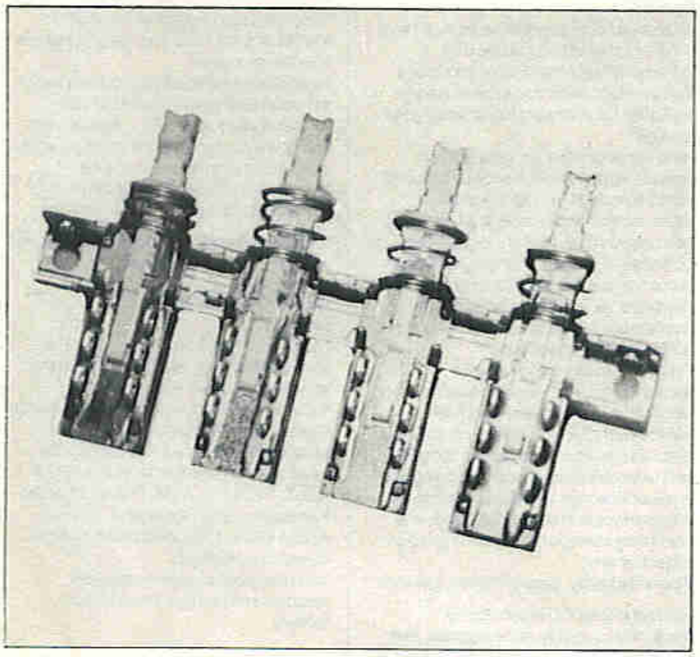
Photo 9. The completed switch assembly.

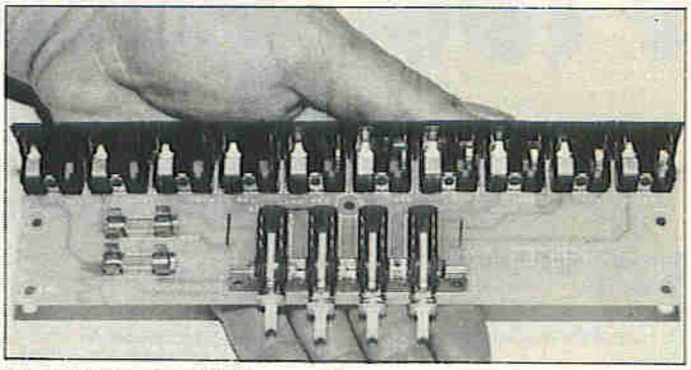
Photo 10. Completed PCB assembly.

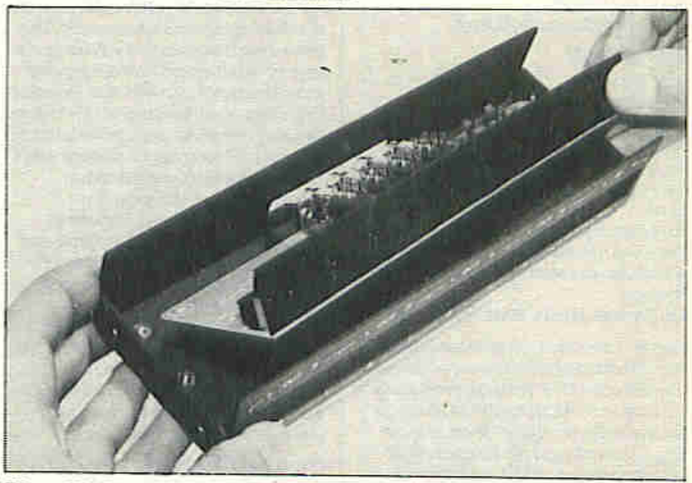
Photo 11. Slide PCB assembly into box from the rear.

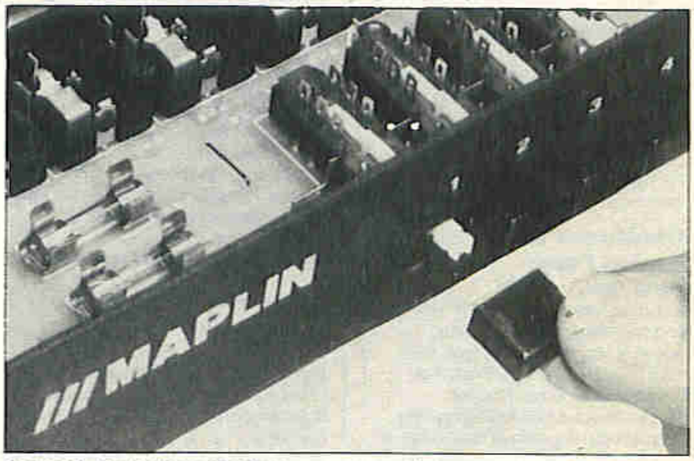

Photo 12. Fit rectangular buttons on to switches.

FOUR WAY SPEAKER SWITCH PARTS LIST

MISCELLANEOUS

SK1-10	PC DIN Socket 2-pin	10	(YX90X)
S1-4	Latchswitch 2-pole	4	(FH67X)
FS1,2	Fuse 20mm 2A	2	(WR05F)
	Fuse clip	4	(WH49D)
	Latchbracket 4 way	1	(FH78K)
	Rct Latchbutton	4	(FH61R)
	P.C. Board	1	(GD92A)
	TC Wire 0.9mm 20swg	1	(BL13P)
	Isonut M3	1	(BF58N)
	4 way SP Switch box	1	(YT63T)
OPTIONAL			
	Fuse 20mm 2A	as req	(WR05F)
	DIN L/S Plug	as req	(HH24B)
	Sldrls 2-pin DIN Plug	as req	(FM42V)
	Slim DIN L/S Plug	as req	(FP13P)
	Dinpak P	as req	(RW27E)
	Dinpak 273	as req	(RW45Y)
	Dinpak 262	as req	(RW44X)
	Dinpak 275	as req	(RW47B)
	Dinpak M	as req	(RW25C)
	Zip Wire	as req	(XR39N)
	HD Loudspeaker Cable	as req	(XR60Q)
	Hi-Fi Loudspkr Cable	as req	(XR72P)

The parts listed above, excluding Optional, are available as a kit, but it is not shown in our 1989 catalogue:
Order As LM77J (4 way Speaker Switch Kit) Price £19.95
The following items are also available separately:
4 way SP Switch Box **Order As YT63T Price £14.95**
4 way SP Switch PCB **Order As GD92A Price £3.50**

Air your views!

A readers forum for your views and comments. If you want to contribute, write to the Editor, 'Electronics - The Maplin Magazine', P.O. Box 3, Rayleigh, Essex, SS6 8LR.

Somebody Down There Likes Us

Dear Editor,

May I congratulate you on a superb magazine.

Nice to see you up there with the rest and yet still be cheaper.

S.P. Gough, Swanage, Dorset.

North Poll

Dear Editor,

Congratulations on the new format magazine just received.

However, referring to 'New Shops' on the inside front cover, I often wonder if people living south of Watford know what is 'North'.

Surely Nottingham is 'North', Leeds is 'North East', Manchester is 'North West'? At least until you open more stores?

Sincerely,

J.H. Preston, Leeds, West Yorkshire.

Well, Mr. Leeds of Preston, it's really tough for us Southern Slickers to know where we are north of the M25. We know every stone and cone on the M25 (most of us spend our days parked out on it) and I know of some people once who actually reached the A1. Indeed many of my friends have told me that it is their ambition to reach the M1 one day. But these are pipe-dreams. Down here we have to make do with our maps of the north – and yes, you're right we got it all wrong in the magazine. We did get it right on pages 10 and 11 of the current catalogue (or at least we think they're right), and we've amended the regions accordingly in this issue.

P.S. We're saving North and North East for other shops!

'Old Moore' Joins Buying Team

Dear Mr. Smith,

Having just received the Dec '88 - Jan '89 Electronics magazine and browsed through its very interesting pages, the article on your new shop in Bristol has prompted me to put pen to paper.

The question I would like to ask is why is your mail order department nearly always out of stock of some common components. Twice recently I have enquired about standard resistors and transistors for your projects only to be told that the items are out of stock, and in the case of the transistors (3SK88) there is no delivery date in sight. I must add the resistors did arrive after a month's delay. But as regards a certain signal strength meter (LB80B), I am still waiting after nine weeks.

The point I am trying to make is that for people like myself, who solely rely on mail order for the supply of components, we seem to be getting a second rate service. It's pointless printing first rate projects if one cannot get the components to build them for a couple of months.

Yours sincerely,

N. Platts, Tetbury, Gloucestershire.

Firstly on the 3SK88, we've been trying to find stock of this item since August, but none of our usual suppliers have had any since then. We eventually found some stock in Japan in November and we're hoping they'll be here by early January. On the other specific item you mention, the signal strength meter, our panel meter manufacturer closed his production line early in 1988 and only recently reopened it. Naturally he didn't tell us until it was already closed. However he did make our old orders one of the first on the new line and most of the meters arrived here in mid-December.

There's usually a good reason if something's out of stock for a long time, but there are always a few lines out of stock just because we didn't order early enough. And the problem here is forecasting. The only way to forecast is to look at how sales have gone in the past and make a guess about how they'll go in the future based on that history. One then looks at how long the supplier normally takes to deliver and then one can see how many to order and when. The trouble is that the future has an obstinate habit of not proceeding according to the forecast. Sometimes manufacturers take longer to supply than normally, or sales increase uncharacteristically. The solution of course is for all you customers to get together and even out your buying so that every week we sell exactly the same number of any item. That way we'll be much better in stock.

Whilst you're organising that, we've put out a plea to send Old Moore to our buying team. Anyone want any almanacs?

Scope For Improvement

Dear Editor,

You may be interested to hear that the Maplin free 'Winter Collection' gift caused a few laughs!

Having ordered an oscilloscope I received a device that tells me how to read the colour code on a resistor!!!

Please don't think I am critical of the free gift which is very useful and has been passed on to a youngster and indeed all strength to the Maplin elbow – just thought the circumstances rather amusing!

Yours sincerely,

W.V. Huntingford, Guildford, Surrey.

Little Boxes All Look The Same

Dear Sir,

It would be an improvement if you were to revert to the zig-zag symbol for resistors, there are too many "boxes" in your circuit diagrams.

I also suggest you copy the Hitachi method of showing layouts which makes components very easy to locate, on a drawing of the printed circuit foil all components are drawn in their symbol form – zig-zags for resistors, parallel lines for capacitors, spirals for inductances, diodes and transistors are also drawn in symbol form. Compare this with the British layout drawings, one is confronted with a mass of oblong boxes, Figure 8 in the September '88 issue of Electronics is an example.

Also would like to see the terms Gramophone and Record Player dropped and standardised on Phonograph.

British Standards Institute has not been helpful in recent times. They dropped the easily remembered term Mho in favour of Siemens; Mho being the reverse of Ohm was the perfect name.

Yours truly, Jack Treeby, Plymouth.

I cannot understand what is so attractive about zig-zags as a symbol for resistors. At least our little boxes look like resistors; what though is the connection between a zig-zag and a resistor? (usually a straight line – Ed). *And fancy calling Figure 8 a mass of boxes! Our draughtsman thought of selling it to the Tate Gallery, he was so pleased with it. Mass of oblong boxes indeed! Several of them are square.*

Your suggestion that record players should be called phonographs would probably have delighted Thomas Edison since that's what he called his invention, however if I recall my schoolboy Greek correctly, phonograph would more accurately describe the instrument which cuts the record in the first place. However, with gramophone now sounding decidedly dated, I think record player is the best term, being a perfect description of what the instrument does.

I'm afraid also that Mho too has had its day. Certainly it is now a well-established response in electronics labs the length and breadth of the country for engineers to indicate that you should wait a moment, with the cry, "Half a Siemen!"

Scope for LCD's

Dear Sir,

As an avid subscriber to 'Electronics' I was delighted to read that it will now be published bi-monthly. Since I consider it the best electronics magazine currently available, I look forward to the time it goes monthly!

Here are a couple of suggestions for projects which I would like to see included in future editions – (1) An electricians mains tester, more reliable than the usual neon screwdriver, built in a logic-probe type case. (2) A mains tester plug, similar to commercial types available at an exorbitant price, which indicates by a combination of 3 neon bulbs whether there is a fault in 13 amp sockets.

Finally, perhaps you can resolve something that has perplexed me for a long time. Large LCD screens have been available for quite some time and are now featured in many cheap lap-top computers, but I have only once read of one being used in an oscilloscope, and this cost a fortune. Why are they not more widely used, why aren't they cheap, and why don't you do a project for one!

Yours faithfully, Gerald Cohen, London.

The fact is that LCD technology is advancing so rapidly at the moment, that LCD scopes could well be on the market at a reasonable price any day, but there are basically two reasons why they're not around today. First high resolution LCD's are still expensive, and not very high resolution at that, and secondly the display can only be changed at a relatively slow rate. For example it takes about 20ms to turn on a pixel on a dot-matrix LCD, just fast enough for a TV screen, though very fast movements on screen still blur slightly, whereas a moving trace on a 20MHz oscilloscope changes much more rapidly. Without some form of storage the LCD scope would just display a blurred mess. Doubtless though, the day of the large flat screen TV and the flat screen scope are not far away.

Digital Voices

Dear Sir,

As far as I know you haven't published a project based around the 'UM5100 Digital Voice Recorder and Playback' chip. The chip's particulars plus a circuit diagram are on page 382 of the '88 Maplin catalogue. It seems that you only have to add a suitably large RAM chip plus a handful of other components and then a 'Digital Voice Message Pad' can be produced.

I think that this would be a very popular project, (the words Digital and RAM would attract a lot of readers). The completed unit would be a lot nicer than the traditional message pads that use a loop of magnetic tape. What do your Boffins think?

Yours faithfully, Peter Nicklen, Farnborough, Hants.

What do our Boffins think? This is a question many of us here have asked for a long time, but we put your other comments to them and they replied, "1-0-0-1-1-1-0-1-0-0-0-1-1-0-1..." (the remainder of their reply has been cut as it was rather boring – Ed.). This reply makes us fairly confident that they have something up their sleeves (either that or they've got remote-controlled hands) – in fact, if you turn to page 48 you could get a pleasant surprise!

Temperature Control

Dear Editor,

Having been totally absorbed by the series 'Electronics by Experiment' on digital electronics, how about a project to test the knowledge gained.

I would be interested if you could show how the serial data output of the MAPLIN temperature module FE33L is produced and how it can be read so that a multi-stage temperature control can be made.

Yours faithfully, Keith Oldham, Stockport, Cheshire.

Most of the details you require will be found in issue 25 of the magazine..

Boolean Booboo

Dear Sir,

I have just received my first copy of the Maplin Magazine, and became interested in the article by Jeff Scott (Part 2).

It's nearly 20 years since I first met Boolean algebra, and Karnaugh maps, but it appears that a mistake has been made when applying the truth table of $\overline{A}.B.C + A.\overline{B.C} + A.B.\overline{C} + A.B.C$ (Figure 27) to the Karnaugh map of Figure 28; $A.\overline{B}.C = 0$ AND $A.B.C = 1$, the inverse of which has been shown instead.

Thus the groupings on the map are incorrect and perhaps should be as follows:

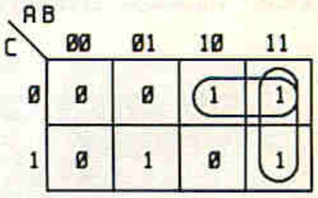

It would seem that the above groupings would result in:

$$A.\overline{B.C} + AB.\overline{C} = A.\overline{C}$$

Also:

$$\overline{A}.B.C + A.B.C = B.C$$

Giving $A.\overline{C} + B.C$

Whereas the groupings given in Figure 28 would result in a second term of:

$$\overline{A}.B.C + A.\overline{B}.C = C$$

resulting in $A.\overline{C} + C$

Hoping that I haven't got my sums wrong.

Yours sincerely,

F.W. Mills, Preston, Lancs.

This series is really keeping you all on your toes. Will we get everything correct in this month's exciting instalment? Check it out on page 2.


Divorce your Hi-Fi.....
But stay married to your music!

With this Infra-Red Link

£39.95 YP63T COMPLETE SYSTEM

New high quality infra-red link allows you to freely move about the room with your own favourite headphones on. No cumbersome trailing wires! Simply plug the transmitter into the headphone socket on your amplifier and your headphones into the receiver unit which clips onto a shirt pocket or belt. You will still enjoy superb stereo quality, but be free to move around whilst staying within sight of the transmitter up to 30 feet away! Receiver has separate left and right volume controls and requires 3 AAA ni-cad batteries. Pack of 3 (SC19V) available, only £3.95. Charger/power supply for transmitter supplied.

All prices include VAT. All items subject to availability.

Maplin ELECTRONICS
P.O. Box 3, Rayleigh, Essex. Telephone Sales (0702) 554161. Shops at: Sutton New Road, Erdington, Birmingham. 302 Gloucester Road, Bristol. 159-161 King Street, Hammersmith, London. 8 Oxford Road, Manchester. 46-48 Bevois Valley Road, Southampton. 282-284 London Road, Southend-on-Sea.

Professional Headphones
Comfortable to wear all-black finish stereo headphone with high velocity mylar dome drive units and samarium cobalt magnets providing virtually distortionless top-flight hi-fi performance.
ONLY £9.95 YP66W

CD Headphones
Superb stereo headphones with samarium cobalt mylar speakers and Compact Disk compatability. Stylish gold coloured headband and padded earpieces for ultimate listening pleasure.
ONLY £14.95 YP65V

Order Coupon Send to P.O. Box 3, Rayleigh, Essex SS6 8LR

Quantity	Description	Code	Price
	Infra-red Stereophone System	YP63T	
	CD Headphones	YP65V	
	Professional Headphones	YP66W	
	Pack of 3 ni-cad AAA batteries	SC19V	
		Add Carriage	50p
		Total	

Name
Address
Post Code
I authorise you to debit my Credit Card account for the cost of goods despatched
Credit Card No ☐☐☐☐☐☐☐☐☐☐☐☐☐☐☐☐☐☐☐☐☐
Access/Amex/Visa/ Delete as required
If ordering by Credit Card please sign
Expiry date of Credit Card
E 2/89

ELECTRONICS BY EXPERIMENT continued from page 23.

verses its polarity, thus generating a triangular wave. The time constant of R1 and C1 is important because it will govern how much time the ramp has before the next reversal occurs. If the time constant is short, the ramp will rise or fall quickly, thus going through a larger voltage change before the next reversal of the input. By contrast, if the time constant is long, the ramp will be slower and will go through a smaller voltage between input reversals. Some possible outputs are shown in Figure 12. For example, in (a) the time constant is such that large excursions of the output occur without any 'flattening out' actually taking place. In (b) the time constant is longer, thus limiting the amplitude of the output voltage. In (c) the time constant is extremely short and flattening of the peaks occurs.

To experiment with this circuit, an initial value of R1 = 10k and C1 = 100nF will be suitable. A wide range of frequencies should be tried. It should be found that flattening occurs at the low frequencies (where the periodic time is long compared with the time constant of R1 and C1); at some frequency there will be a maximum value output where flattening 'just does not' occur. At high frequencies there is no flattening but the amplitude of the output rapidly diminishes as the frequency increases. The effects of other time constants can also be tried.

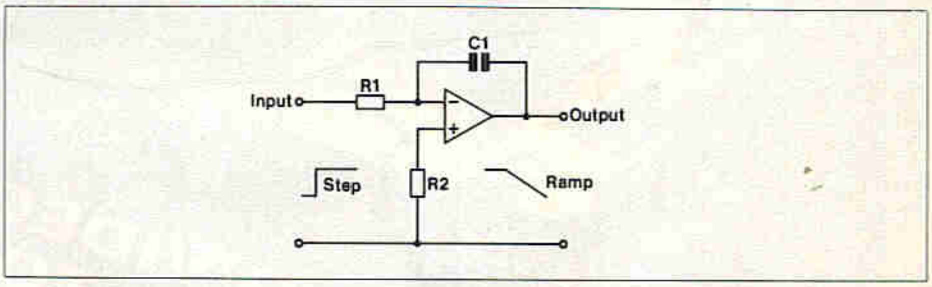

Figure 11. The integrator; a step input gives a ramp output.

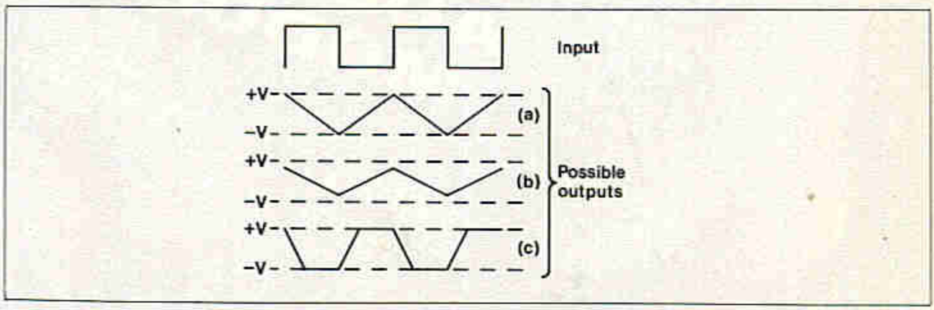

Figure 12. Output waveforms for an integrator shown against a square-wave input. (a) optimum time constant, (b) long time constant, (c) short time constant.

Parts List for the ±15V Regulator

C1, C2	100nF Disc Ceramic	(BX03D)
C3, C4	10µF 25V Electrolytic	(FB22Y)
IC1	4195 Dual 15V Regulator	(XX02C)
	Stripboard	(FL06G)
	Pin 2145	(FL24B)

AUDIO AND MODULATOR

Design by Chris Barlow

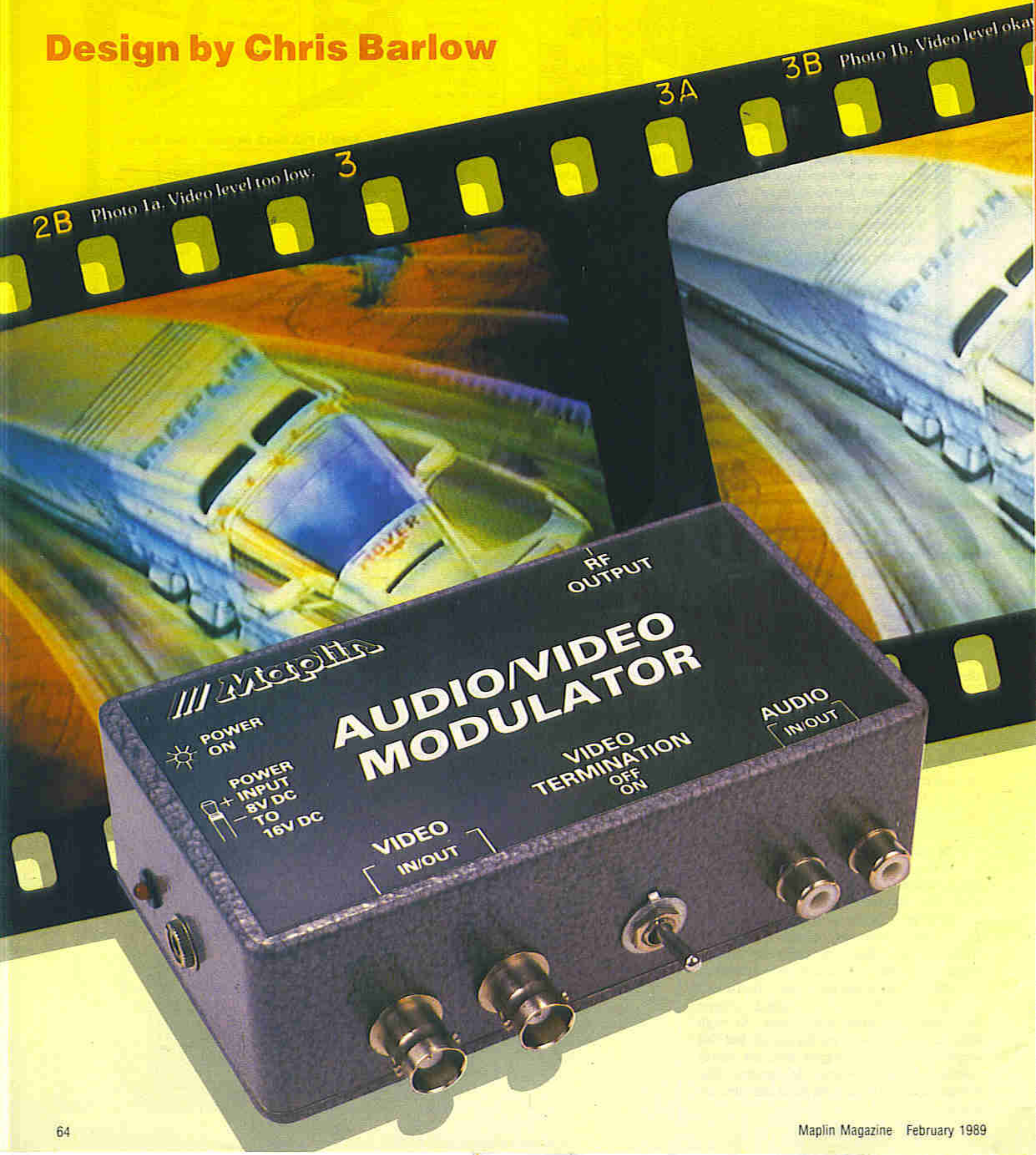

Photo 1a. Video level too low.

Photo 1b. Video level oka

VIDEO

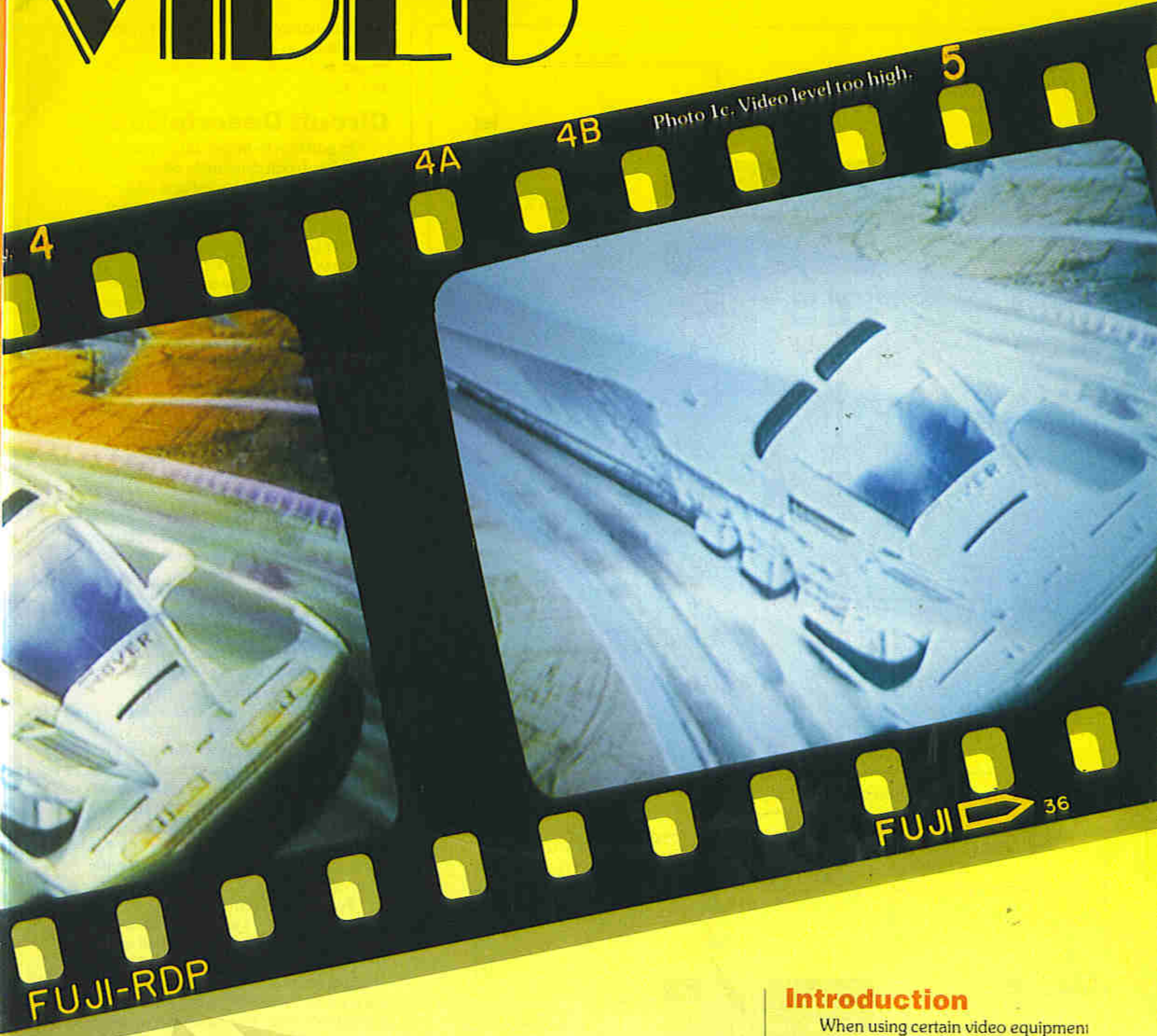
Photo 1c. Video level too high.

- ★ Easy construction
- ★ Minimum of tools and test gear required
- ★ No alignment equipment needed
- ★ Colour or black and white
- ★ 6MHz sound sub-carrier
- ★ Good modulation linearity

Introduction

When using certain video equipment an ordinary television receiver can not be connected directly to the video signal. Some TV sets do have a direct video input socket (SCART), but most domestic sets only have an aerial input for reception of UHF TV stations. To solve this problem, a UHF modulator is required, which superimposes the video and audio signals on to a high frequency carrier wave. To simplify the construction and alignment of the project a pre-tuned modulator module (UM1286) has been employed in the design. From the composite video and mono sound signals the modulator produces an RF output suitable for connection to the aerial input of a UK UHF TV set. The carrier frequency is chosen to fall on an unused television channel (channel 36). The UM1286 has an integral 6MHz RF oscillator for the sound sub-carrier signal and a wide linear video bandwidth to cater for the chrominance sub-carrier. A few of the many possible

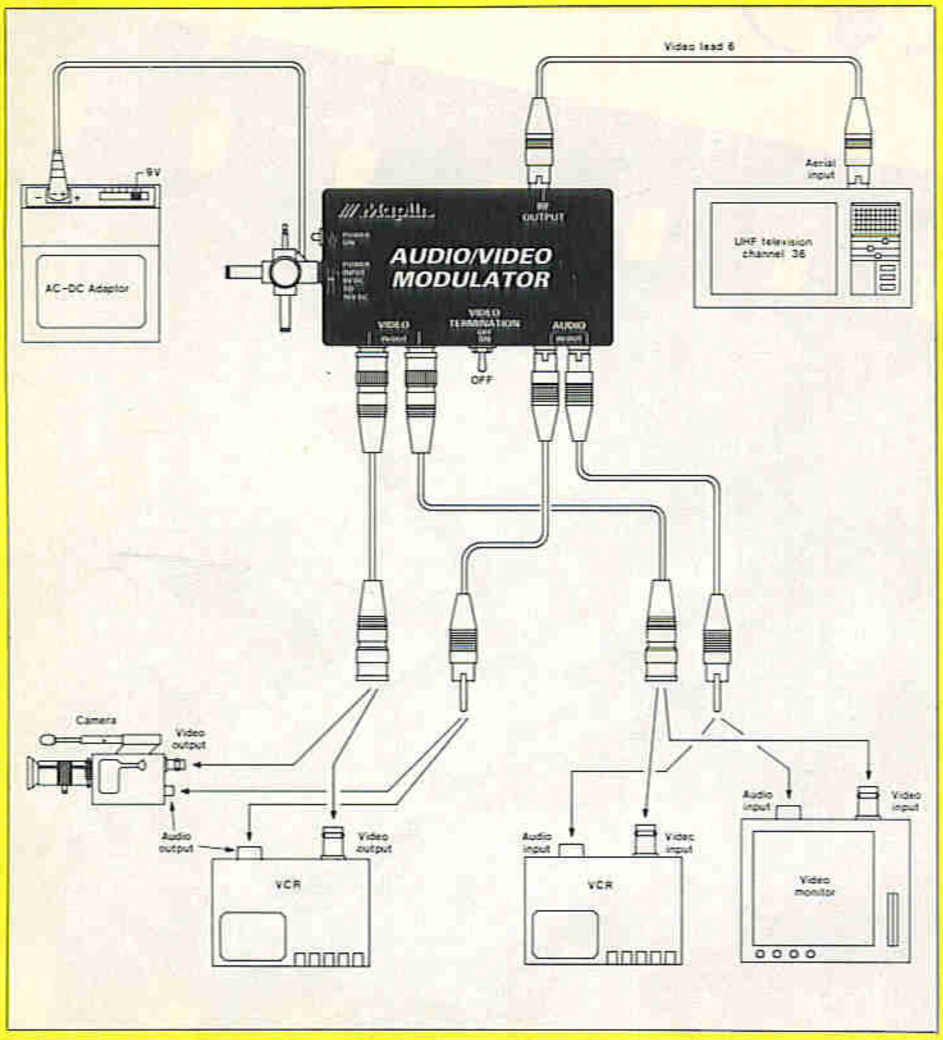

Figure 1a. Audio and video connections.

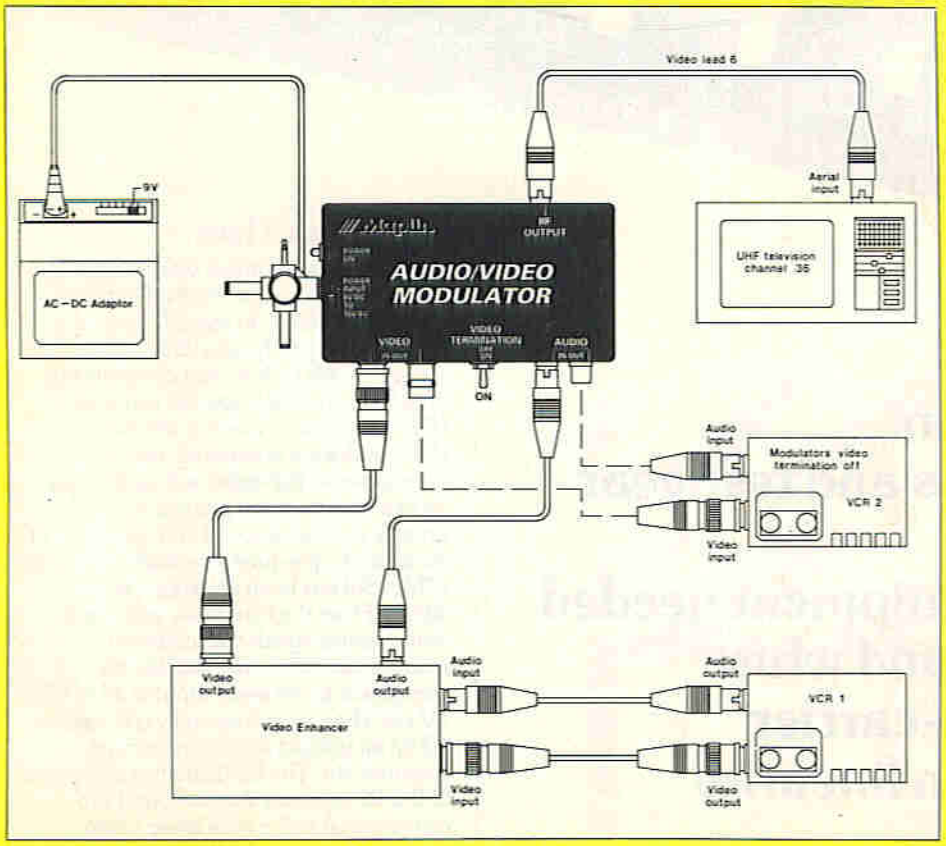

Figure 1b. Video enhancer connections.

configurations of audio/video equipment connections to and from the finished boxed unit are shown in Figures 1a, 1b, and 1c.

Circuit Description

In addition to the circuit shown in Figure 3, a block diagram is detailed in Figure 2. This should assist you when following the circuit description or fault finding in the completed unit.

The DC power is applied to PL2, positive voltage to pin 1 and negative to pin 4 (0V). This supply must be within the range of 8V to 16V and have the correct polarity, otherwise damage will occur to the semiconductors and polarised components. To prevent this, a diode D2 has to have the positive supply voltage applied to its anode before the DC power can pass to the rest of the circuit.

Resistor R9 and capacitor C6 provide the main decoupling for the +V supply rail, with C5 giving additional high frequency decoupling. Further supply decoupling is provided by R15, C15 and C16 in the +V1 audio supply rail. The red LED power on indicator, LD1 has its anode connected to pin 2 of PL2 and its cathode to pin 3. Resistor R8 provides current limiting to the LED thus restricting the drain to only a few mA.

The circuit incorporates two voltage regulators; an 11V zener diode, ZD1 and a +5V regulator IC, RG1. ZD1 in conjunction with R7 limits the voltage supply to the video buffer, this rail is decoupled by C3 and C4. The +5V output from RG1 is used to power the UM1286, MD1 (pin C) and also provides a voltage reference to RV2 the sound sub-carrier oscillator fine tuning control. Capacitors C7 and C8 are used to decouple this +5V supply, with C9 decoupling the fine tune input of MD1 (pin A).

For the audio circuit to function correctly a half +V1 supply reference is necessary. This is provided by half of IC1. The voltage reference applied to the input of this op-amp is derived from the two resistors R13 and R14 which form a potential divider. The op-amp is merely used as a zero gain buffer to provide a low impedance half supply, its input being decoupled by C12, C13 and its output by C14. The other half of this IC is used as an audio amplifier which drives the sound input of the UM1286, MD1 (pin B). Resistors R11 and R12 are used to set the gain of the op-amp with RV3 adjusting the level of audio signal applied to its input. The incoming signal from pin 6 of PL1 is AC coupled to this control via C10 with the input being loaded by R10 and C11. Pin 5 of PL1 is used as the ground or screen connection for the audio line.

The video signal is applied to pin 1 of PL1 and its ground is connected to pin 2. The input impedance of the video amp is approximately one million ohms (1MΩ). However, this input can be reduced to 75Ω by operating switch S1 on pins 3 and 4 of PL1. When the switch is closed a 75Ω resistor, R1 is placed across the video input, this is known as a termination load.

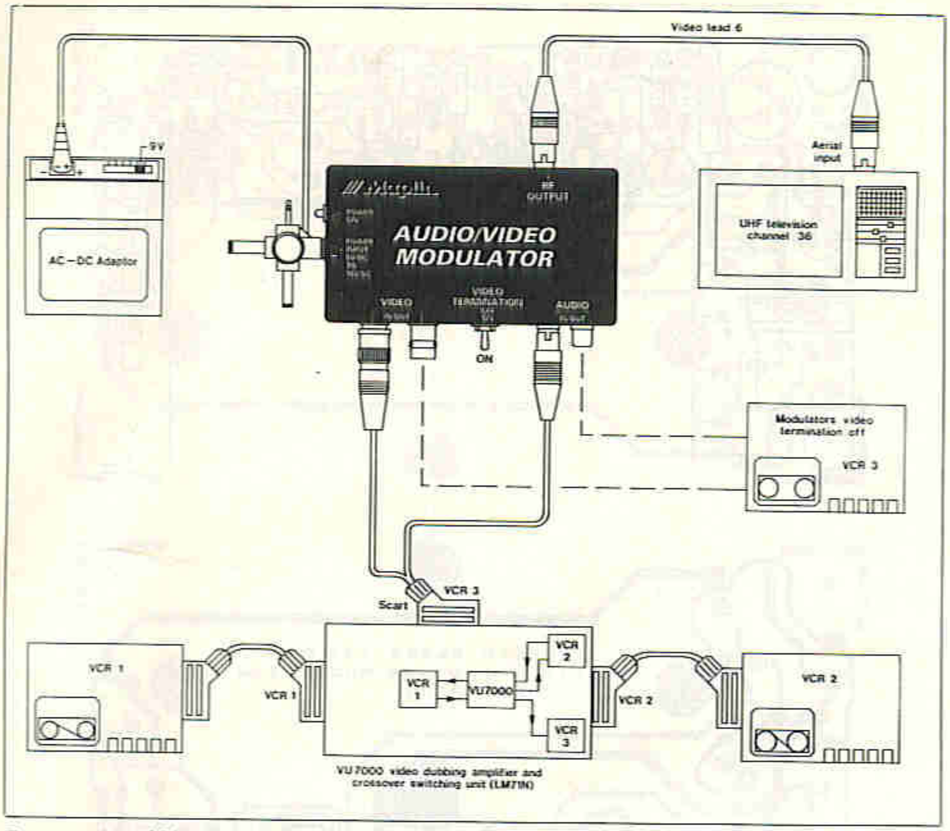

Figure 1c. VU7000 connections.

The video signals are AC coupled via C1 in to the gate of the Field Effect Transistor (FET) TR1, with diode D1 and resistor R2 used to maintain the correct bias level. TR1 and TR2 form a broad band buffer amplifier, with its gain set by the value of the negative feed back resistor R5. Resistor R4 is used as the source load for TR1 and the preset RV1 as the collector output load in TR2. The DC bias for TR2 is derived from R3, TR1 and a small amount of frequency compensation is provided by C2 and R6.

The video output from the amplifier is tapped off by the wiper of RV1 and is fed to the video input pin (D) of the UM1286 modulator MD1. Inside MD1 the audio signal is converted into a 6MHz FM modulated sub-carrier. It is then mixed with the video signal and fed to the AM modulator where the UHF carrier is combined to produce the final modulated RF output.

PCB Assembly

The PCB is a single-sided fibre glass type, chosen for maximum reliability and stability. However, removal of a misplaced component is quite difficult so please double-check each component type, value

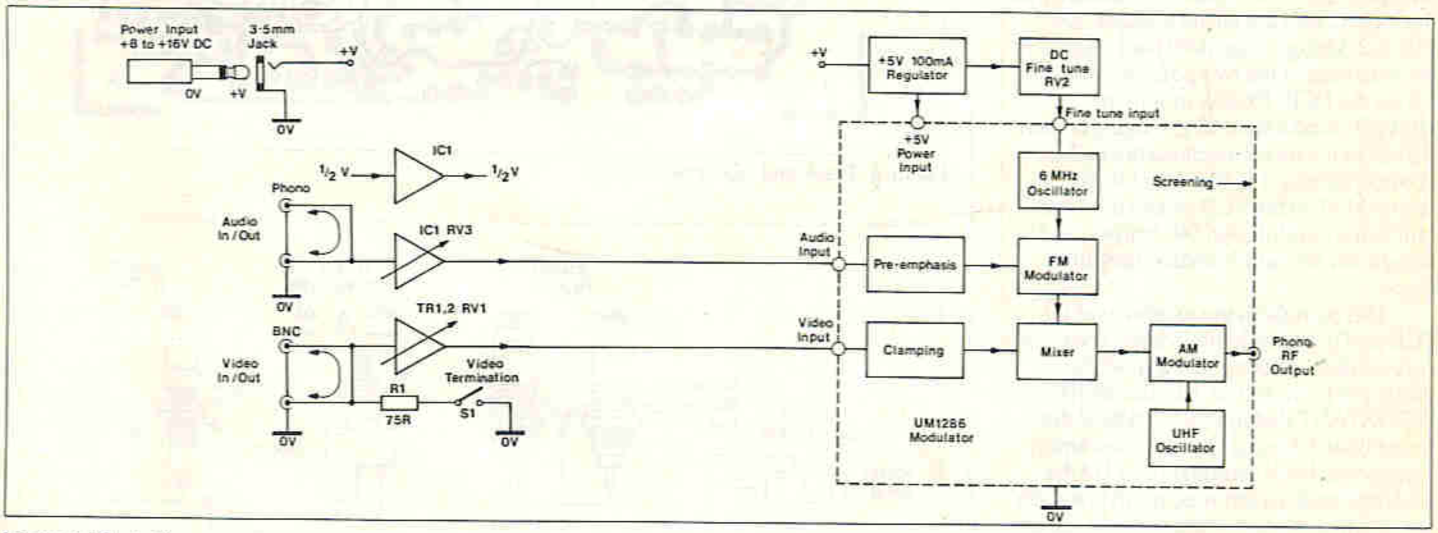

Figure 2. Block diagram.

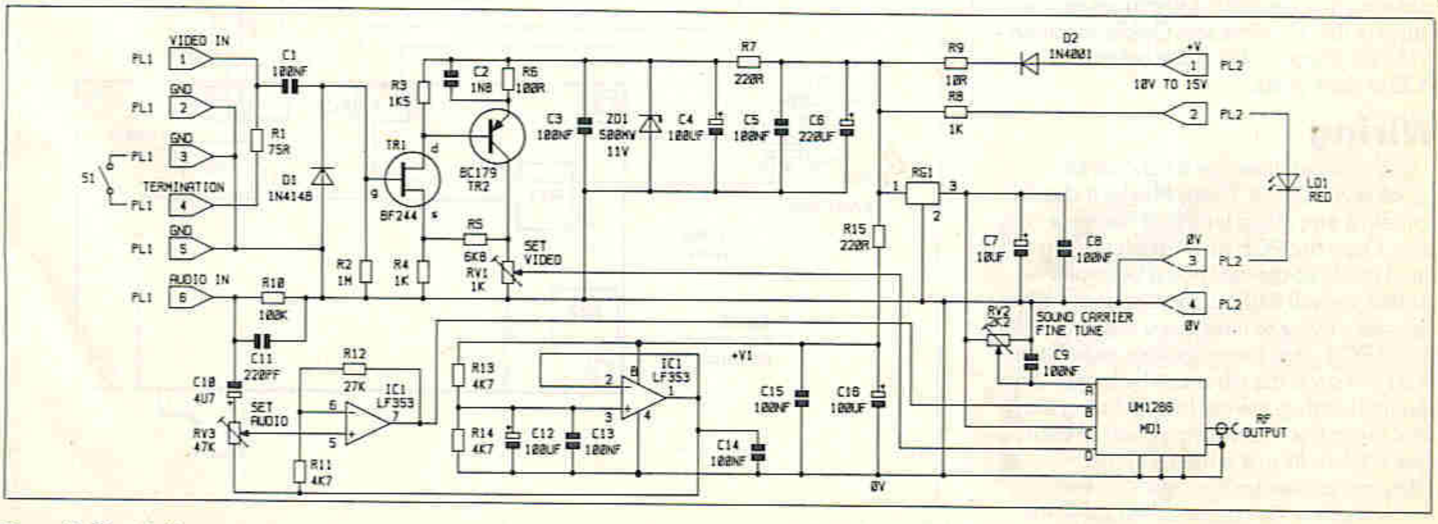

Figure 3. Circuit diagram.

and its polarity where appropriate, before soldering! The PCB has a printed legend to assist you in correctly positioning each item, see Figure 4.

The sequence in which the components are fitted is not critical. However, the following instructions will be of use in making these tasks as straightforward as possible. It is usually easier to start with the smaller components, such as the resistors. Next mount the ceramic and electrolytic capacitors. The polarity for the electrolytic capacitors is shown by a plus sign (+) matching that on the PCB legend. However, on some capacitors the polarity is designated by a negative symbol (-), in which case the lead nearest this symbol goes away from the positive sign on the legend. All the diodes have a band at one end. Be sure to position them according to the legend, where the appropriate markings are shown. Next install the two transistors and the voltage regulator, matching each case to its outline on the legend. When fitting the eight pin IC socket ensure that you match the notch with the block on the board. Install IC1 making certain that all the pins go into the socket and the pin one marker is at the notched end. Next install the three preset resistors RV1, 2, 3 and set them all to their half way positions. When fitting the 'Minicon' connectors ensure that the locking tags are facing inwards, see Photo 2. Using component lead off-cuts fit the wire links at the two positions marked LK on the PCB. Finally, mount the UM1286 modulator MD1, making certain that all four wire connections are in their correct positions (A, B, C and D). To secure MD1 to the PCB simply twist the four fixing tags through 90 degrees, and using a fair amount of solder, heat in to place.

This completes the assembly of the PCB and you should now check your work very carefully making sure that all the solder joints are sound. It is also VERY IMPORTANT that the solder side of the circuit board does not have any trimmed component leads standing proud of the soldered track, as this may result in a short circuit when the unit is fitted into its metal die-cast box. Further information on soldering and assembly techniques can be found in the 'Constructors Guide' included in the kit. Photo 3 shows the completed PCB in clear detail.

Wiring

If you purchase the hardware kit (stock code LM79L) from Maplin it should contain a one metre length of hook-up wire. Once the PCB assembly has been fitted inside its die-cast box it becomes difficult to fault find on, for this reason it is advisable to make temporary connections to the PCB and chassis sockets, see Figure 5. At this stage the wires can be longer than required as they are cut to size during the final assembly. The starting point of each wire is taken from a terminal in the 'Minicon' connector PL1 or PL2. The terminals must be crimped then soldered to each wire before it is inserted into the

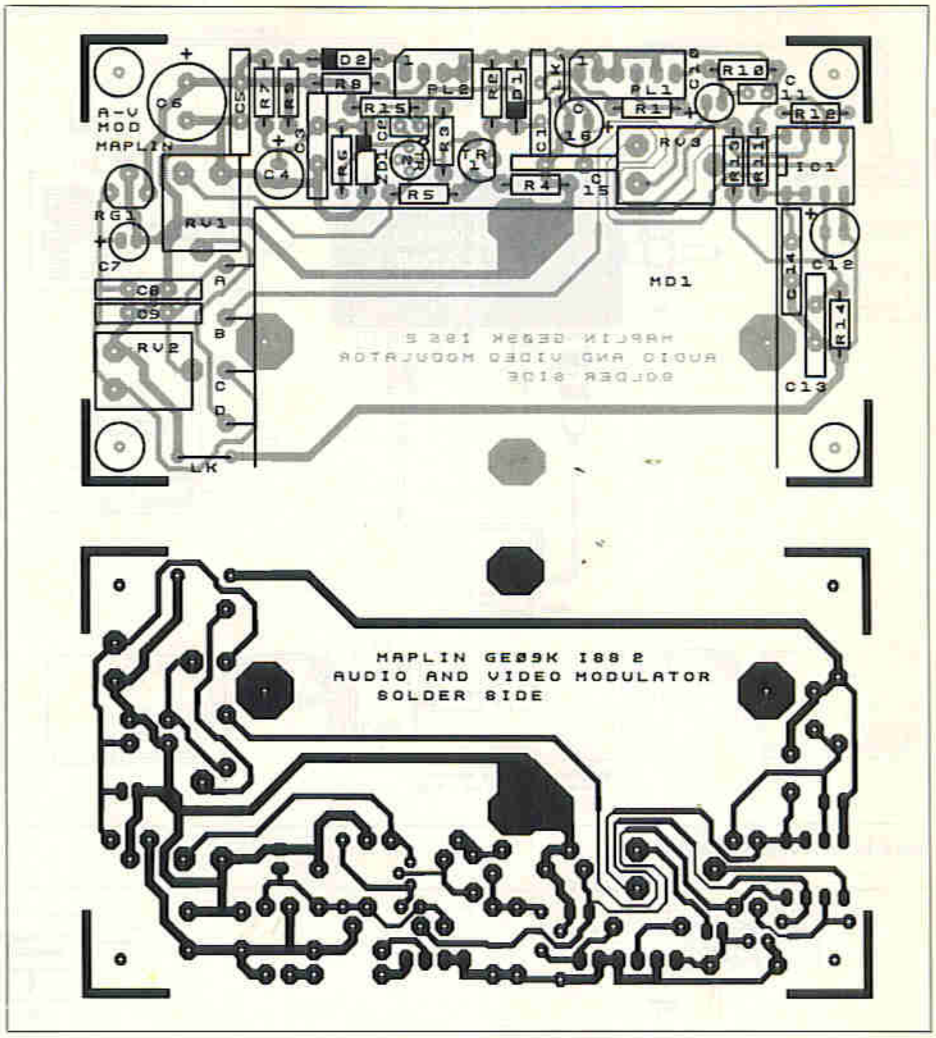

Figure 4. Track and layout of the PCB.

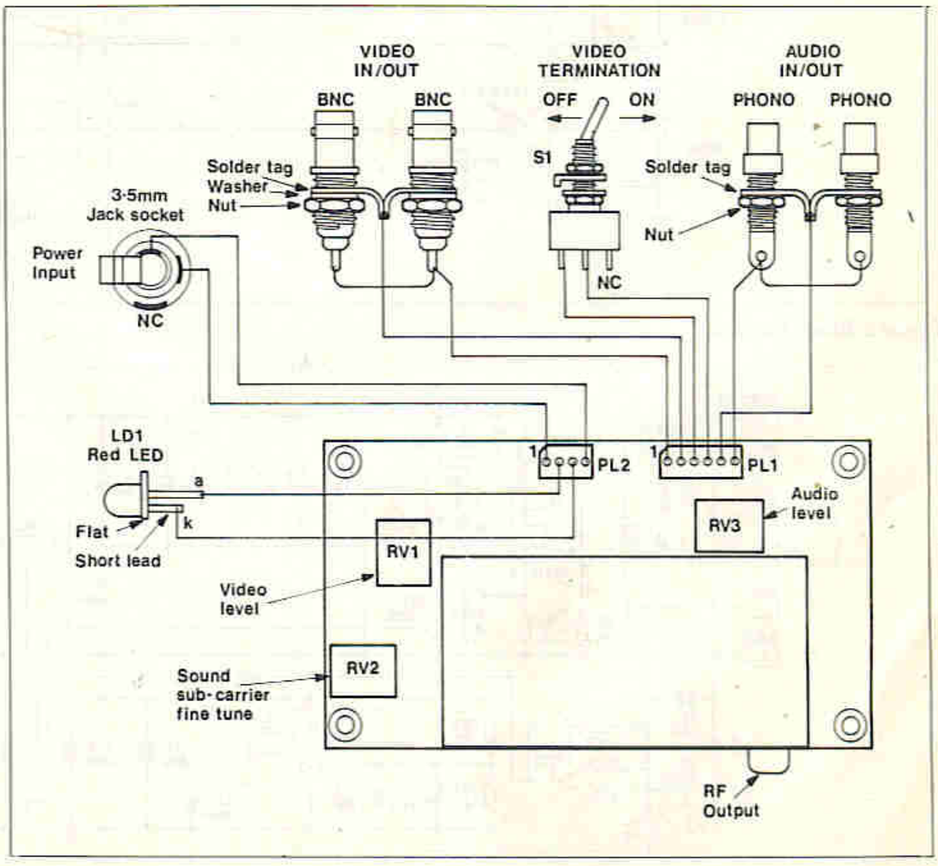

Figure 5. Wiring.

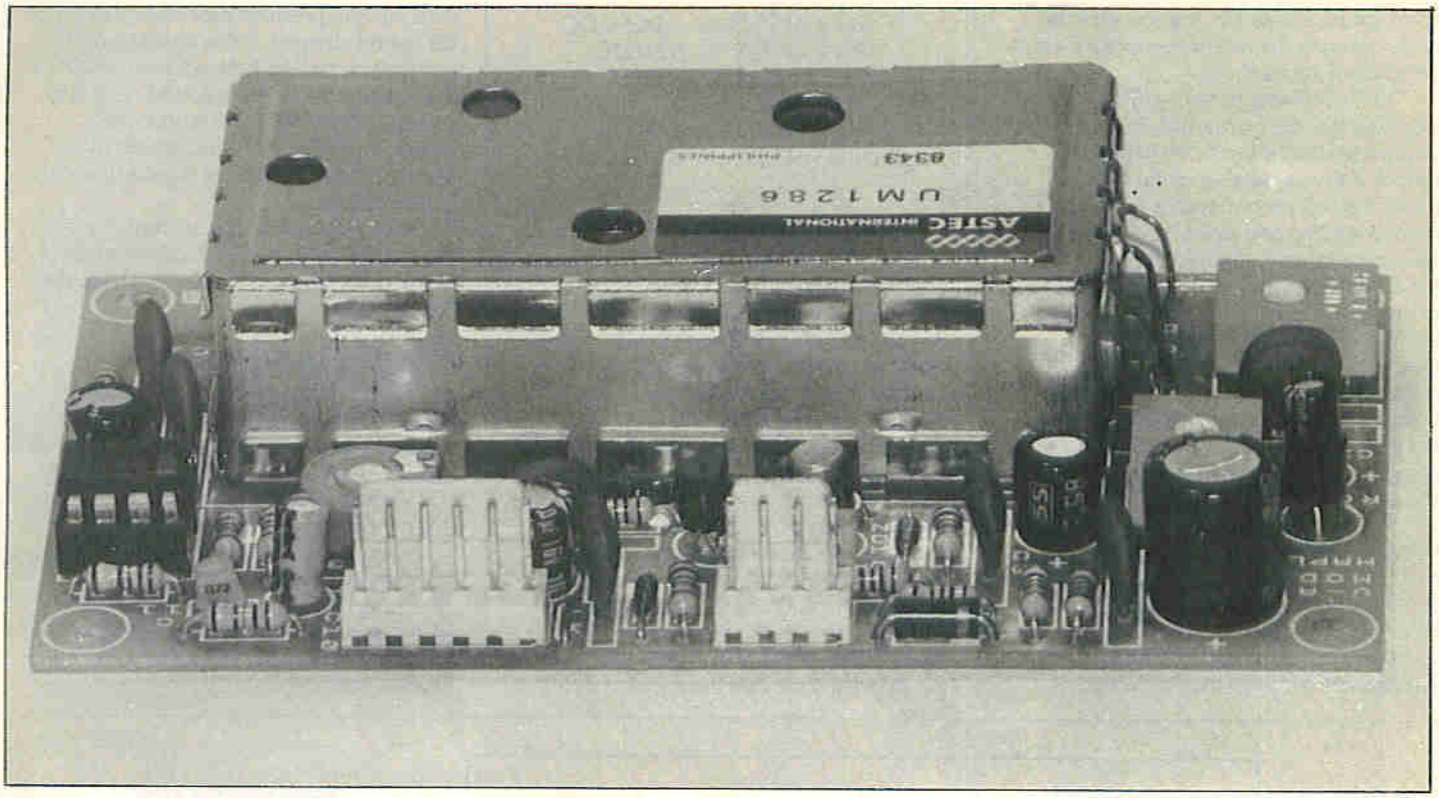

Photo 2. Minicon connectors facing inwards.

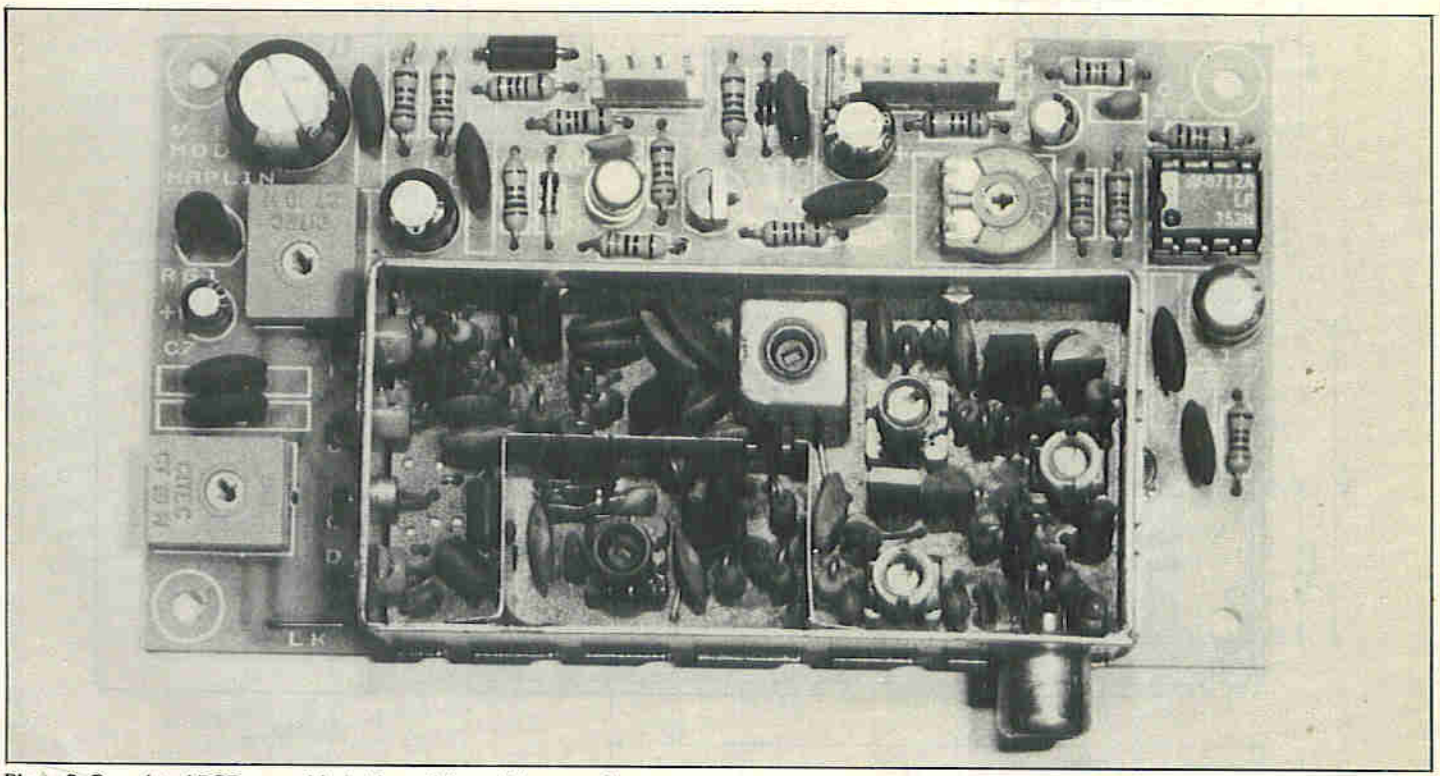

Photo 3. Completed PCB assembly (with modulator lid removed).

'Minicon' housing, a locking tag on the terminal will ensure that it stays securely in place.

Testing

All the tests can be made with a minimum of equipment. You will need a multimeter, a UHF TV set and an audio/video source. To power the unit you will require a +8V to +16V DC supply, the unregulated AC adaptor type XX09K set to its +9V output is adequate. The readings were taken on the prototype using a digital multimeter and some of the readings obtained may vary slightly depending on the type of meter you use.

Carefully lay out the PCB assembly on a non-conductive surface, such as a piece of dry paper or plastic. Position the chassis mounting components so they are clear of the circuit board and make sure the wires are as shown in Figure 5. The DC input jack socket is a type commonly used on Japanese radio equipment, where the centre pin is the positive connection and the negative contact is the threaded body. The first test is to measure the resistance at this socket. With your multimeter set to read ohms, connect its red positive test lead to the terminal with the wire going to pin 1 of PL2 and connect the black negative lead to the other terminal. You should get a reading of approximately 1.8kΩ and when the test leads are reversed, a much higher reading in excess of 20MΩ should be present. These readings are due to D2, the component which protects the rest of the circuit from reverse polarity damage.

In the following tests it will be assumed that the power supply used is the unregulated AC adaptor set to its +9V output. Select a suitable range on your meter that will accommodate a 300mA DC current reading and place it in the positive power line from the jack socket. Connect the 3.5mm jack plug of the mains adaptor to the power input, then plug the adaptor into the AC mains supply. The power indicator LD1 should light up, with a current reading of approximately 40mA being observed. Unplug the adaptor from the mains, then remove the test meter and reconnect the positive line to the jack socket.

Now set your multimeter to read DC volts. All voltages are positive with respect to ground, so connect your negative lead to a convenient ground point on the unit. When the modulator is powered up, voltages present on the PCB should approximately match the following:

Pin 1 of PL2 = +14.5V DC
Pin 2 of PL2 = +2V DC
Pin C of MD1 = +5V DC
Pin 8 of IC1 = +12V DC
Pin 1 of IC1 = +6V DC
Cathode of ZD1 = +11V DC

This completes the DC testing of the audio and video modulator, now remove your multimeter from the unit.

Next connect a phono to coax lead (Maplin code FV90X) from the RF output of the modulator to the aerial input of a UHF television, see Figure 1a. Using a spare channel selector tune to approximately 36, where you should find a blank screen and a silent sound track. Connect an audio/video signal to the in/out of the modulator, if no other video connection is made to the unit then the termination switch must be on, see Figure 5. To set the audio level, adjust RV3 until the sound level is the same as an off air transmission (BBC, ITV, CH4). Next set the video level so that peak whites don't flare out and produce excessive buzzing on the sound channel. If this buzzing sound persists you can try tuning it out using RV2 the sound sub-carrier fine tune. The final setting of the video level is up to you. However, the colour photographs in 1a, 1b and 1c should provide a guide in setting it up correctly.

DO NOT make any attempt to adjust the presets inside the UM1286 modulator, as these are factory set using sophisticated test equipment.

Final Assembly

The unit is designed to fit in to a die-cast metal box type M5004 (Maplin code LH71N) which is also available ready drilled (Maplin code YT64U). However, if you wish to make up your own box, drilling details are given in Figure 6.

Next remove all the chassis mounting components from the wiring and disconnect the 'Minicon' plugs from the PCB assembly. The PCB will only just fit inside the box so the following procedure must be used:

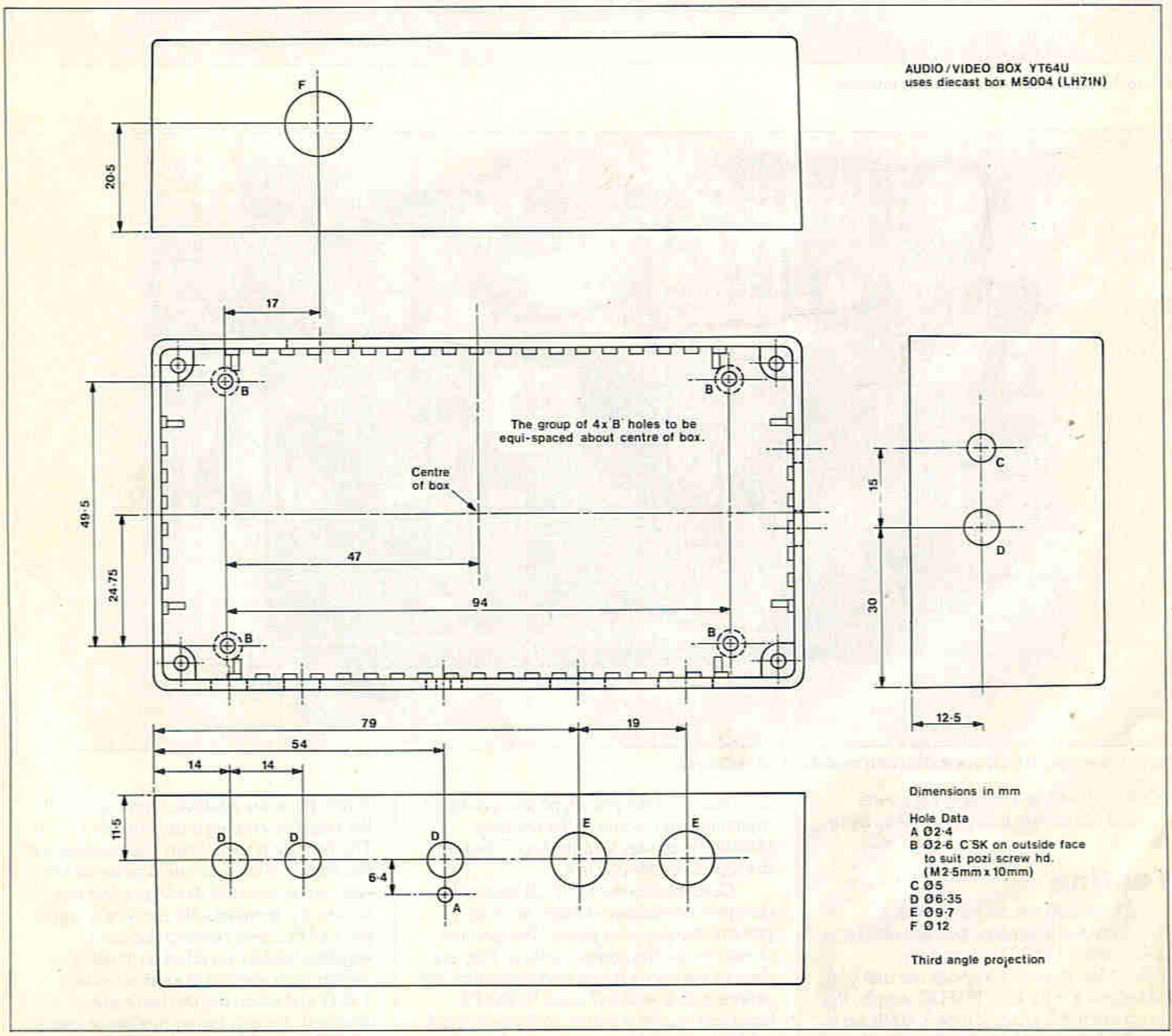

Figure 6. Box drilling.

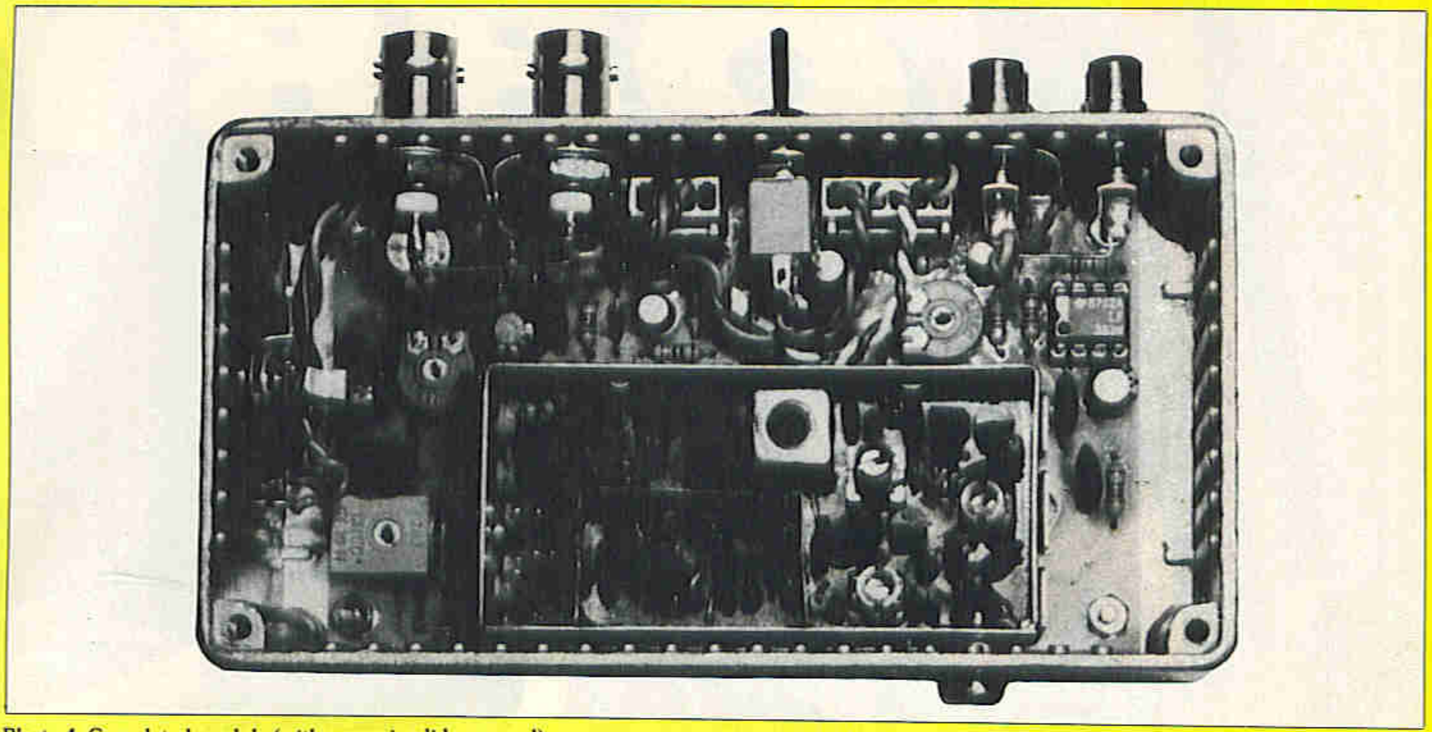

Photo 4. Completed module (with screening lid removed).

1. Remove the metal screening lid of the UM1286 modulator, see Photo 4.
2. Position the PCB at an angle to the box so that the phono socket of the modulator passes through the hole in the side.
3. Carefully position the PCB and secure in to place using the M2.5 hardware.
4. Refit the screening of the modulator.

Install the BNC and phono sockets ensuring that all are tightly secured with their solder tags facing each other, see Figure 5. Next fit the video termination switch, S1 and the power input jack socket. The red LED power indicator LD1 is held in position by a 3mm panel mounting clip which is simply pushed in to place.

This completes the assembly of the unit. Now refit the 'Minicon' plugs and rewire the chassis mounted components, see Figure 5. Before fitting the custom made stick-on top panel (stock code JL74R) test out the unit to ensure that all is well. Finally fit the lid of the box using the screws provided and stick on the four small rubber feet. The unit is now ready for use.

Using the Modulator

The audio/video modulator has been designed to be tolerant to varying supply voltages and differing inter-connecting lead lengths. The following information should assist you in setting up your system.

AC-DC adaptor model XX09K.
Minimum voltage setting = 6V.
Normal voltage setting = 9V.
Maximum voltage setting = 12V.
Rev change = Plus sign (+) on DC output plug to + on adaptor.

Phono to Coax lead length.
Minimum length = As short as you like.
Normal length = 1.2 metres (video lead 6).
Maximum length = 10 metres (good quality low-loss co-axial cable).

Phono audio lead length.
Minimum length = As short as you like.
Normal length = 1.5 metres (video lead 4) or 1.2 metres (plugpak 279).
Maximum length = 4 metres (good quality low noise cable).

BNC video lead length.
Minimum length = As short as you like.
Normal length = 1.5 to 1.8 metres (video lead 1, 3, or 5).
Maximum length = 4 metres (good quality low-loss cable).

Unterminated video input to modulator.
Video termination switch = ON (see Figures 1b and 1c).

Terminated video input to/from modulator.
Video termination switch = OFF (see Figure 1a).

HARDWARE PARTS LIST

MISCELLANEOUS

Case Drilled	1	(YT64U)
Stick-on Feet Small	1 Pkt	(FE32K)
Stick-on Top Panel	1	(JL74R)
LED Clip 3mm	1	(YY39N)
Pozi Screw M2.5 × 10mm	1 Pkt	(JC68Y)
Steel Nut M2.5	1 Pkt	(JD62S)
Isoshake M2.5	1 Pkt	(BF45Y)
Jack Socket 3.5mm	1	(HF82D)
Chassis Phono Socket	2	(YW06G)
BNC Round Socket 50Ω	2	(HH18U)
Hook-up Wire Blue	1 Pkt	(BL01B)

The above parts are available as a kit:
Order As LM79L (Modulator Hardware Kit) Price £9.95
The following items are also available separately:
Box Pre-drilled **Order As YT64U Price £5.95**
Stick-on Top Panel **Order As JL74R Price £1.40**

Specification of Prototype

Power Supply Voltage:	8V to 16V DC
Supply Current at 8V:	26mA
12V:	32mA
16V:	48mA
Audio Input Level:	1V Peak to Peak
Audio Input Impedance:	30kΩ
Video Input Level:	1V Peak to Peak
Video Input Impedance:	1MΩ (No Termination) 75Ω (Terminated)
RF TV Output:	Channel 36 (591.5MHz)
Sound Sub-Carrier:	6MHz
Video Bandwidth:	8MHz
Output Socket:	Phono

Continued on page 78.

HOBBY IN ACTION

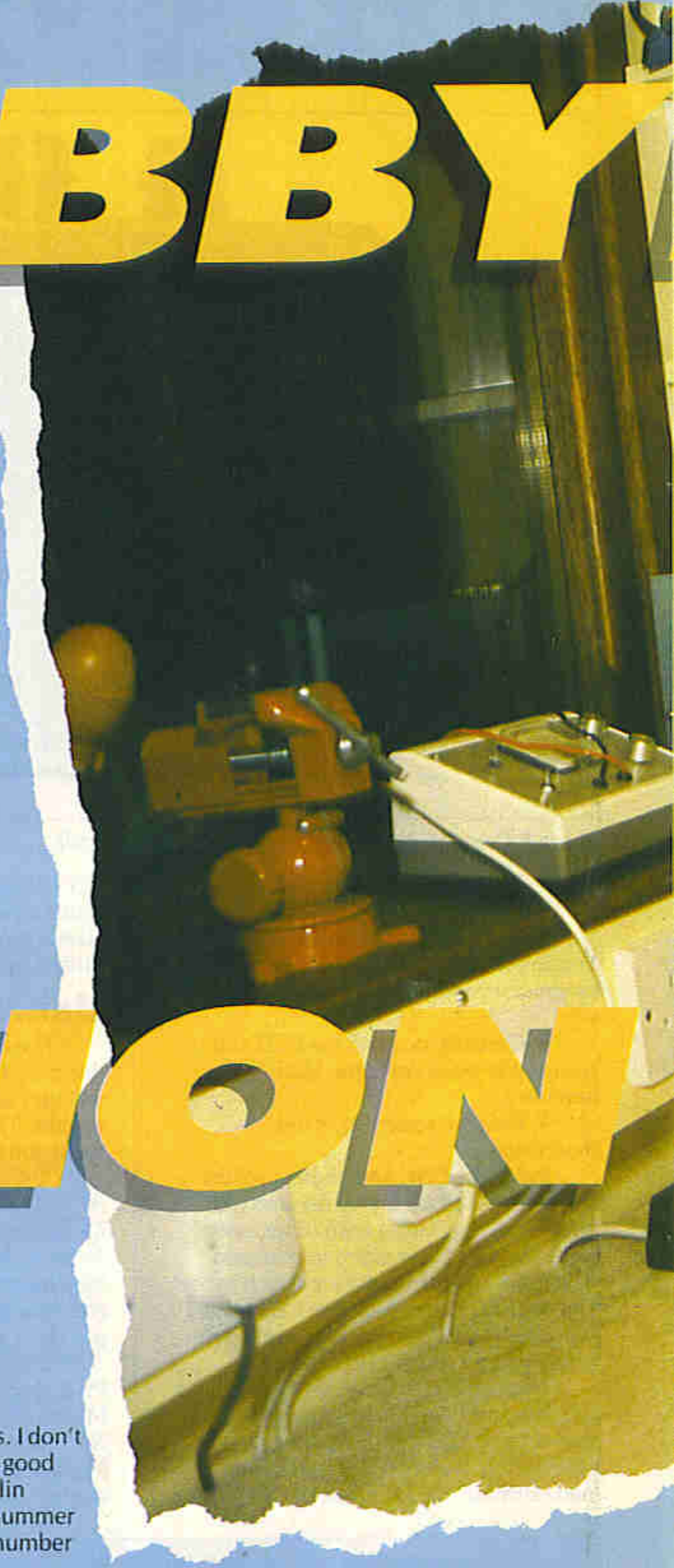

Reported by Jonathan Williams

Philip Walker's projects get knocked about. They get bumped, thumped, and dropped. Bits of them get tugged and tripped over. Who, you may well be asking yourself, subjects his work to these rigorous field conditions? The answer is Sunday school children, mostly.

Over the years, Philip, who lives in Ormskirk, has installed an impressive array of high tech devices in his local church, and many of them are either his own designs or published circuits which he has substantially modified. Not content with installing a public address system, he has built high power lighting controllers for youth events and visiting rock bands, an automatic projector screen, a digitally programmable central heating controller, and an extensive digital security system. I asked him how he learned to do all this.

"I've never had much formal training. I'm a chartered mechanical engineer and that included some electrical study, but mostly in valves and such like; it was just at the end of the valve era.

"What I've learned about electronics has come from reading magazines. I don't keep them all, but I've got a pretty good collection. I always keep the Maplin magazine, and I keep the Elektor summer double issue where you get a fair number of circuits."

His approach to design is more a matter of assembling and experimenting with published circuits as building blocks than of designing completely from scratch. "You do get failures from time to time – but you put them down to experience, keep the components, and they inevitably come in useful again."

The digital door lock in the church, which is amongst the most successful and popular of his gadgets, is a good example of his building block approach.

"What we have there is two Maplin Codelock boards; two because the lock will respond to a main code, changed every so often, which authorised users will have, and also an auxiliary code known only to the security officer and released by him to tradesmen or people who may only need to get in on one special occasion.

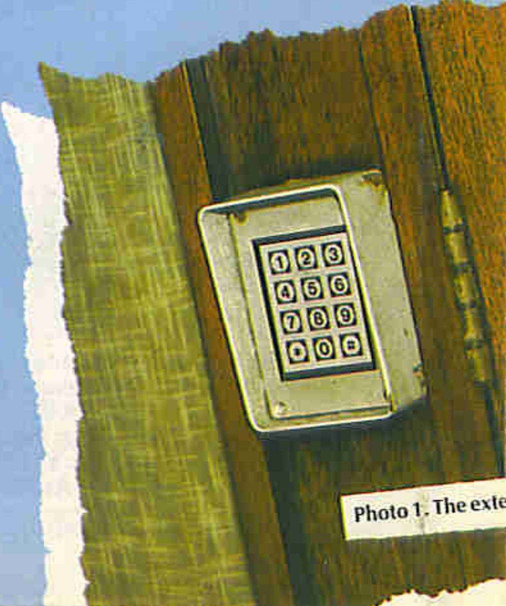

Photo 1. The exte

IST

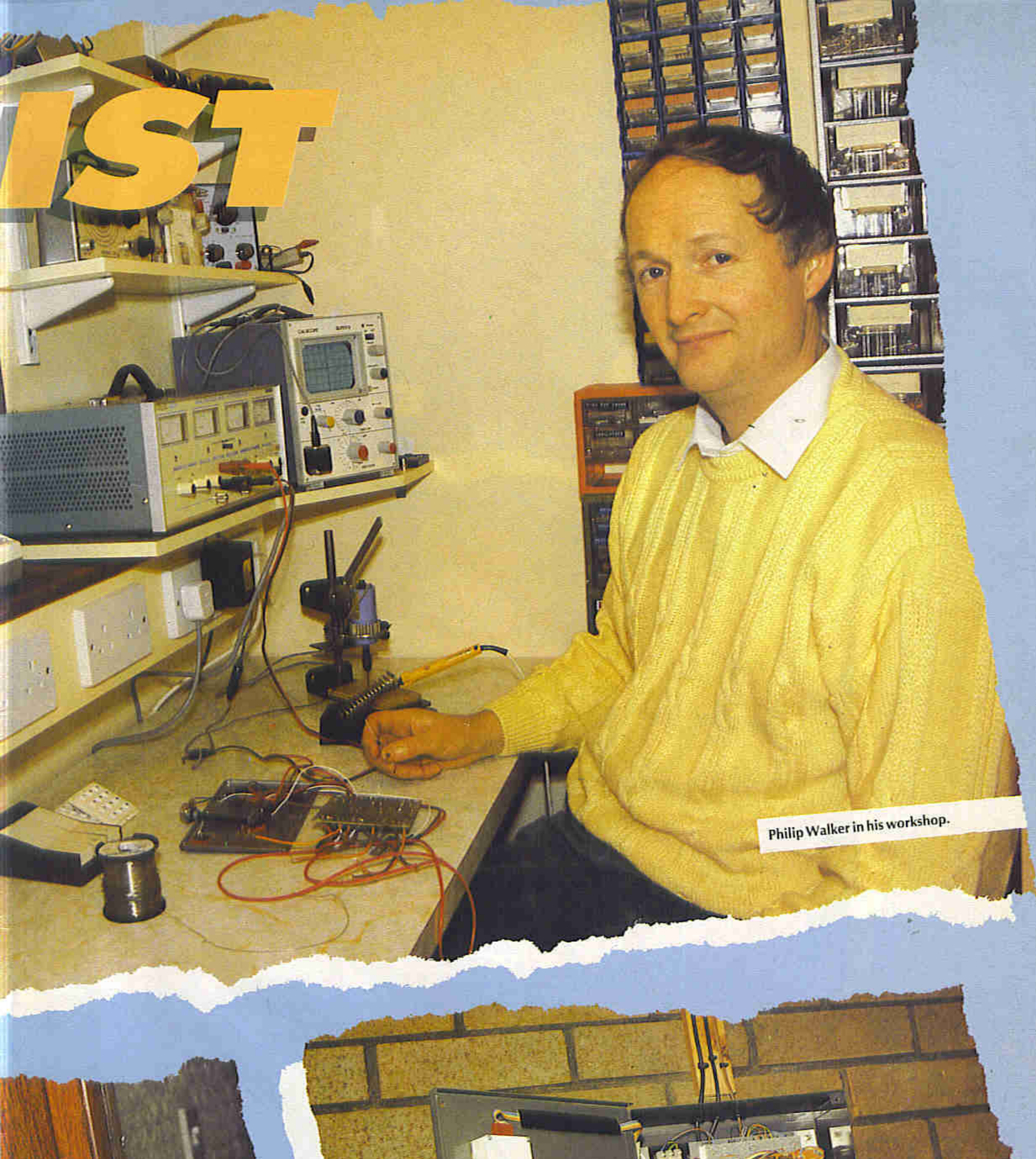
Philip Walker in his workshop.


nal touch-pads for the digital church door lock.

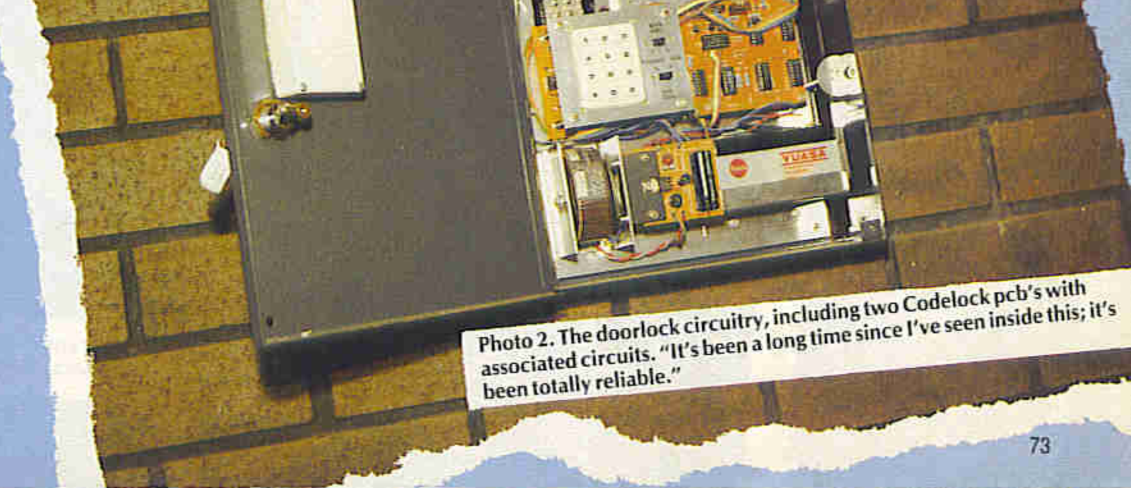
Photo 2. The doorlock circuitry, including two Codelock pcb's with associated circuits. "It's been a long time since I've seen inside this; it's been totally reliable."

This code can be changed immediately after than person's been, without having to go round all the twenty or thirty regular authorised users notifying them of a new code.

"There's some associated circuitry in there, including a bistable to allow you to use the code to lock the door as well as unlock it; also the power supply and standby lead-acid battery – which in the event of a power failure will not only retain the memories but also allow the door to open when people are trying to get out – and circuitry to turn the output from the Codelock boards into something suitable for driving the electric catches. It's been a long time since I've seen inside this, because I'm pleased to say it's been totally reliable.

"What I've learned more than anything else from making projects for a public building like this is that what you make has got to be utterly reliable, because it's going to be operated by all sorts of people who don't necessarily know how to

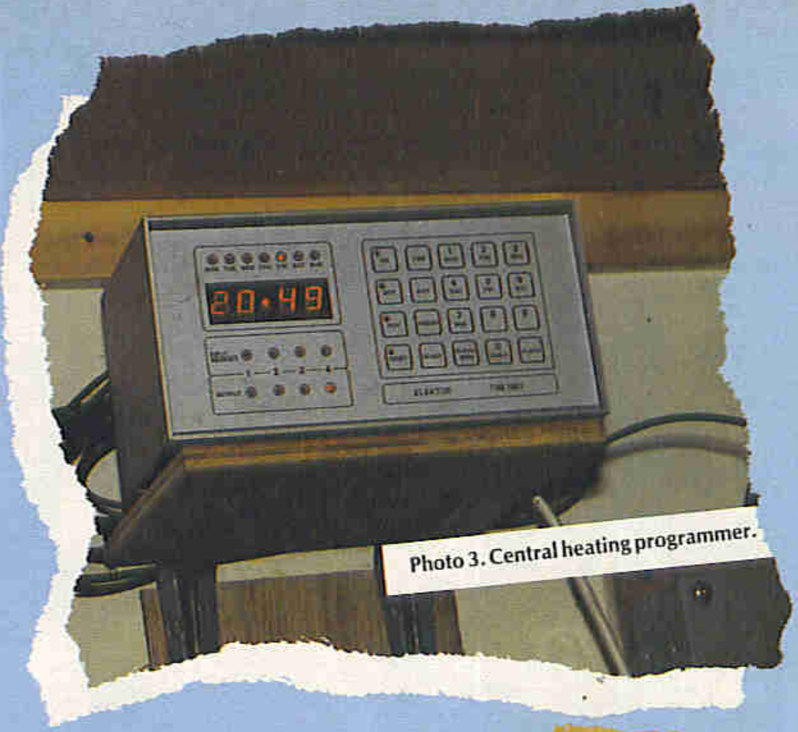

Photo 3. Central heating programmer.

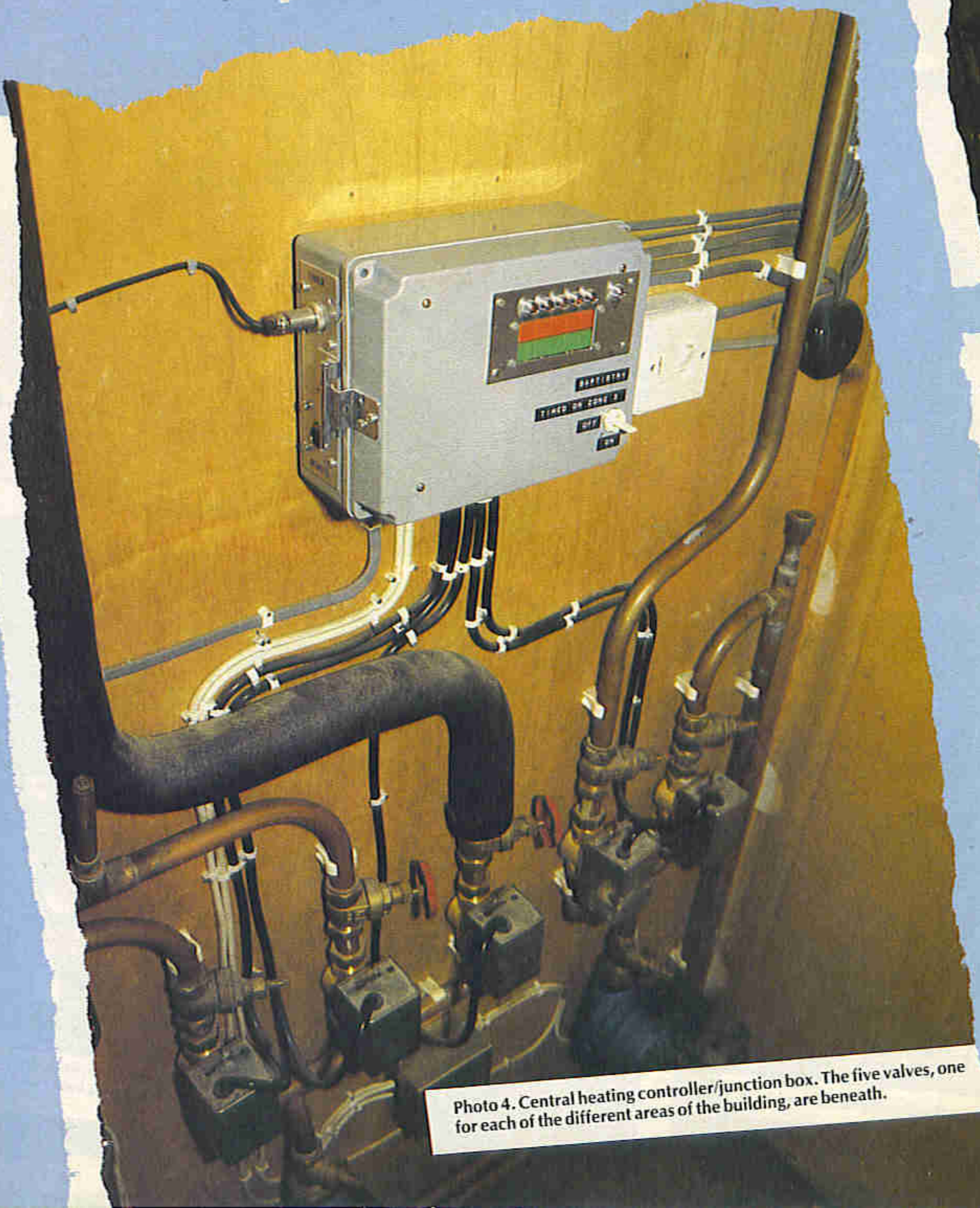

Photo 4. Central heating controller/junction box. The five valves, one for each of the different areas of the building, are beneath.

Photo 5. The automatic projector screen in operation.

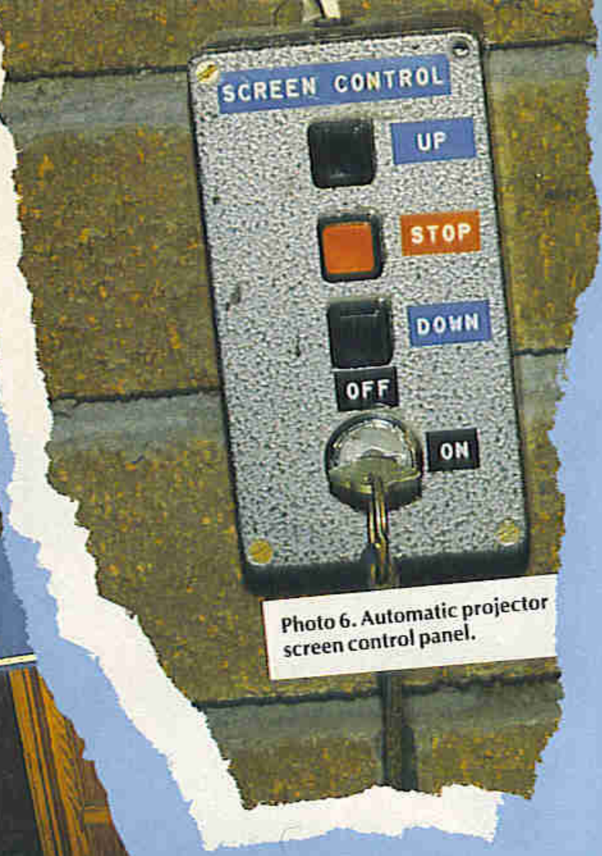

Photo 6. Automatic projector screen control panel.

tweak things as you might, and if it fails, and the heating doesn't come on or whatever, then you've lost credibility and people are going to say, 'Well, we can't have a gadget like that again!' The other thing is that it's got to be tough and robust, because things do get a lot of hammering – children playing with them and things like that. It's got to be in a good solid metal box, not a plastic one."

The heating system just mentioned is again a mixture of home grown and published designs. Basically, he designed his own controller and interfaced it to the Elektor digital programmer project.

"The heating controller has five main heating circuits, for the main hall, side rooms, storage area, and hot water tank; and if you take up the carpet tiles and lift the hatch you'll find a full size baptistry under the floor, heated by a conventional radiator panel in its side – it's very effective, and heats it up very quickly.

"The controller serves mainly as a junction box for all the cabling. We're dealing with five motorised valves, two pumps, thermostats in all the different rooms, and there's a 'frost-stat' up in the roof so that the heating comes on if it freezes. There are a few additional functions – an override for the baptistry, that sort of thing.

"The main control of all this is through the programmer. It controls four of the five circuits – we hardly need to have electronically programmable baptistry heating so that is switched manually – with any number of ons and offs over a five day period. The idea is we only have those parts of the hall heated which are in use. We don't want heating on all the time and there's no resident caretaker so it's got to be done automatically."

An even more mechanically involved project is his automatic projector screen. "We use the overhead projector extensively in church services, for the words of choruses and hymns, but we didn't want a screen obstructing the front wall of the church all the time." The resulting device not only raises and lowers the screen smoothly and quietly, but can position it with millimetre accuracy.

"You'll be intrigued to know that the bearings at either end of the mechanism are the Maplin quarter inch shaft ball bearings, meant for tuning controls, because they're actually quite robustly made. I wanted something ultra-reliable to stop the screen exactly where I wanted it. I thought of microswitches, I thought of some optical means, but in the end I solved it beautifully: at one end of the shaft is a Meccano worm gear which drives a Meccano spur gear which then drives a potentiometer. The pot turns more or less through its full travel once as the screen goes from fully up to fully down. This is connected to one input of a differential amplifier which controls the motor, so by varying a resistance connected to the other input you get the screen exactly where you want it.

"The only slight problem is that the weight of the screen when it's down tends to drive the motor and cause the thing to carry on unrolling, so I've had to make a friction brake. I'd rather have an electronic

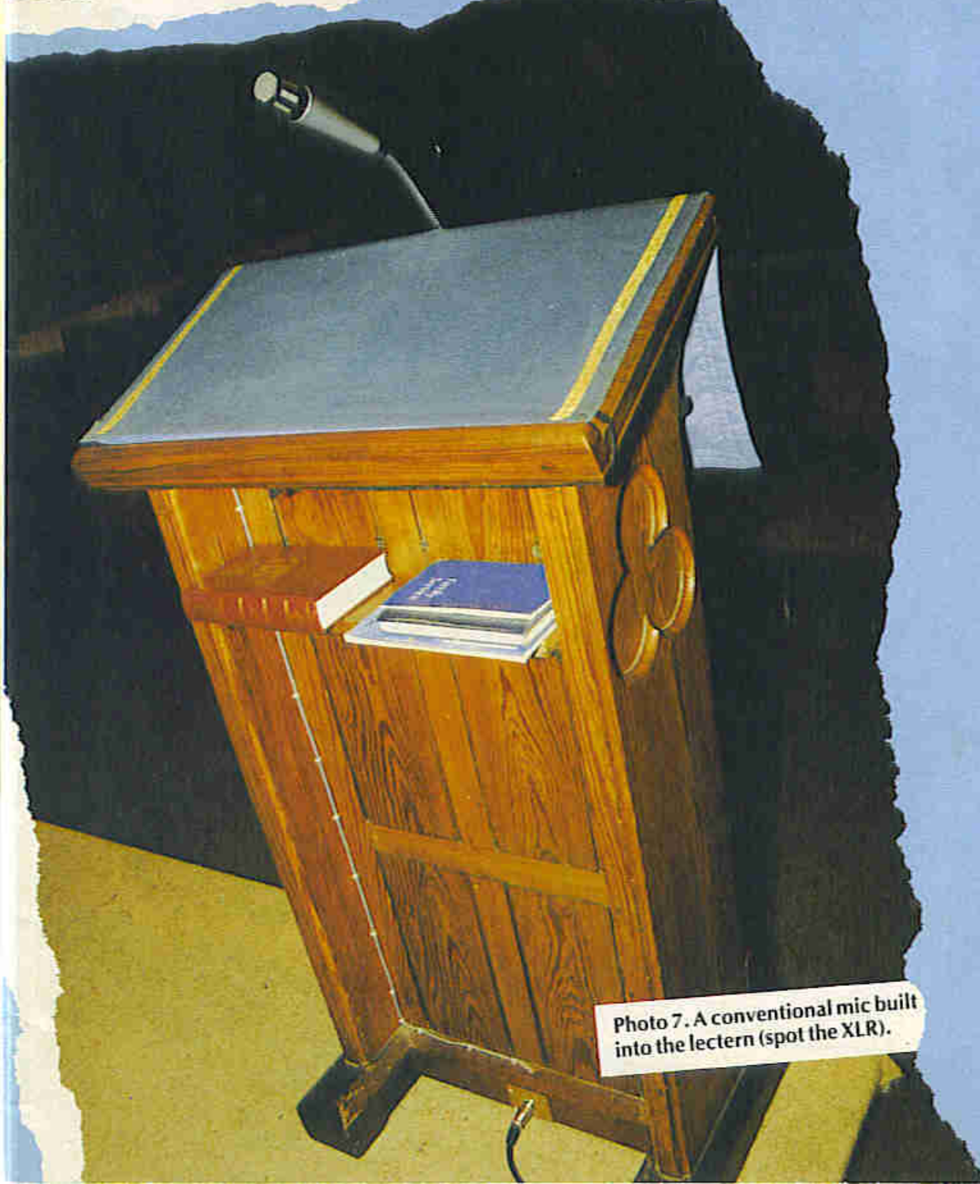

Photo 7. A conventional mic built into the lectern (spot the XLR).

solution. Come to that, I'd rather have an electronic solution to everything, but it'll do."

But it is the audio side of his hobby which occupied his attention for the most part, just as it sparked off his interest in electronics as a child.

"I remember at the age of seven obtaining from somewhere an old army surplus microphone, one of those black bakelite things, and found to my enormous excitement that with a battery and a loudspeaker from an old radio set I could talk and hear it coming out of the other end.

"In my teens, a school friend and I actually connected our houses together. He lived about a quarter of a mile away but this was in Sussex and there were no other houses between us. It was galvanised steel fencing wire, I think, and I learned about resistance there, because we were very disappointed to find that any sort of battery voltage applied at one end was completely zilch at the other. We could nevertheless talk through a microphone-earphone arrangement because as I now know, the impedance of such a circuit is quite high and it can operate perfectly satisfactorily over a wire of that sort . . . apart from the fact that it kept breaking.

"What we found really mysterious was that the first time we connected this up we heard somebody else talking to us over the wire. They didn't respond to us but just kept talking, and we could only just make ourselves heard. Of course, this was only a few miles from the BBC's overseas service relay station on the top of Ashdown Forest, and we found out in due course that with this enormous quarter of a mile long wire, well earthed at either end with coiled earphones, we'd got the best aerial in the town, so we were picking up everything from this station."

"Nowadays the P.A. in the church has probably absorbed more of my time than anything else. Most of the equipment is bought. We have radio mics because we really don't want anyone to be inhibited from moving if they need to. I would say to any church to invest in this sort of thing. I've been to so many churches where the poor vicar is tied to his pulpit by the microphone cable. There's no need – just clip the lapel mic on and the person forgets that it's there, and wherever they go they're amplified.

"My contribution to all this, apart from selecting the equipment and installing it, has been the network of cabling. There's actually over a hundred metres of Maplin high quality braided screen microphone cable in this hall. It's very tough, and you need that, because people will knock them about, trip over them, and all sorts of things. I only use metal XLR connectors, for the same reason."

The P.A.'s development has included some futuristic initiatives, including at one time a servo-controlled ultra-directional microphone mounted in the ceiling.

"My idea was that someone at the back could aim it at whoever was speaking, but it was a failure. I think the problem there was that you don't really get those directional characteristics in such a comparatively small space as this. It's a

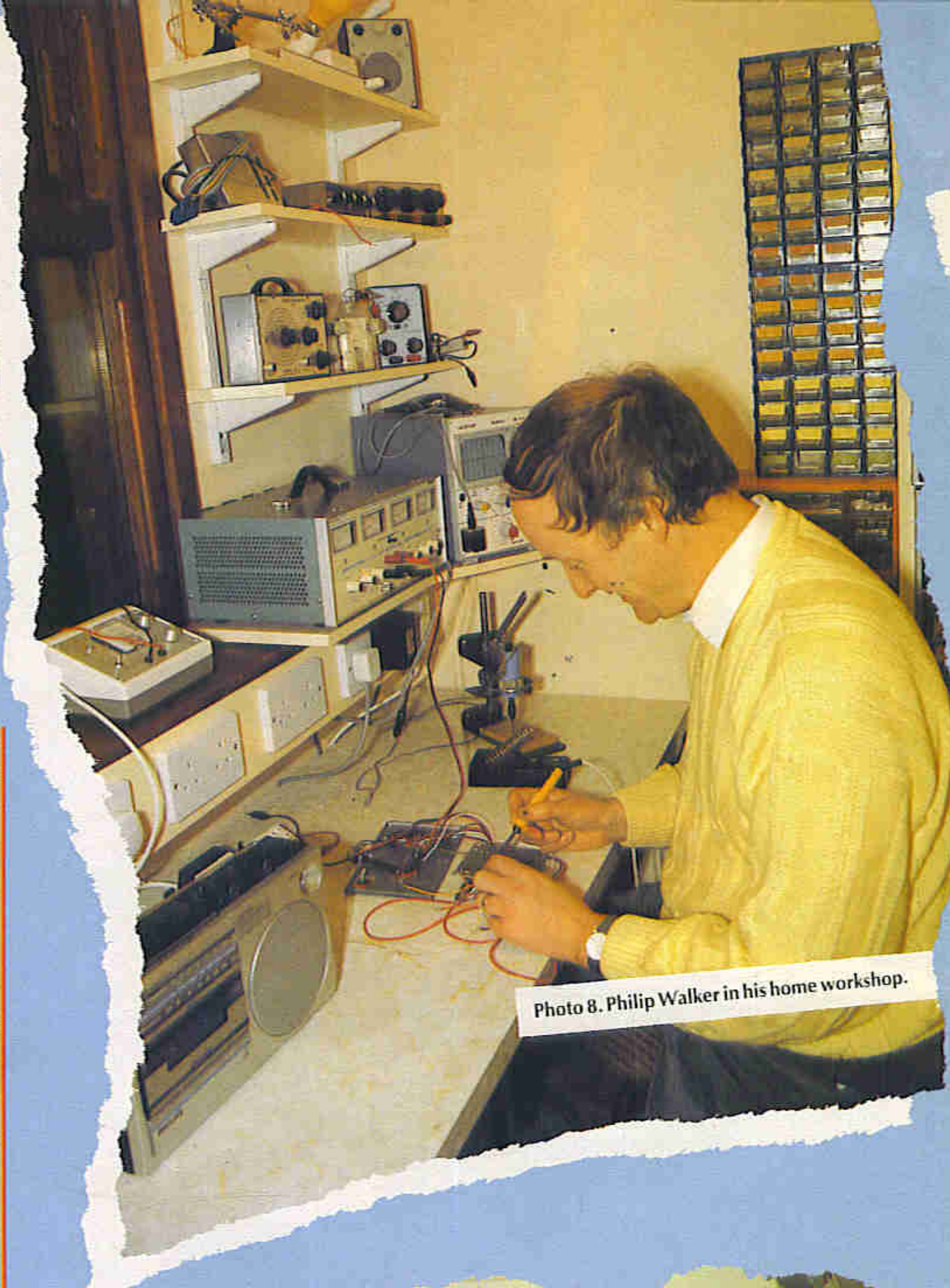

Photo 8. Philip Walker in his home workshop.

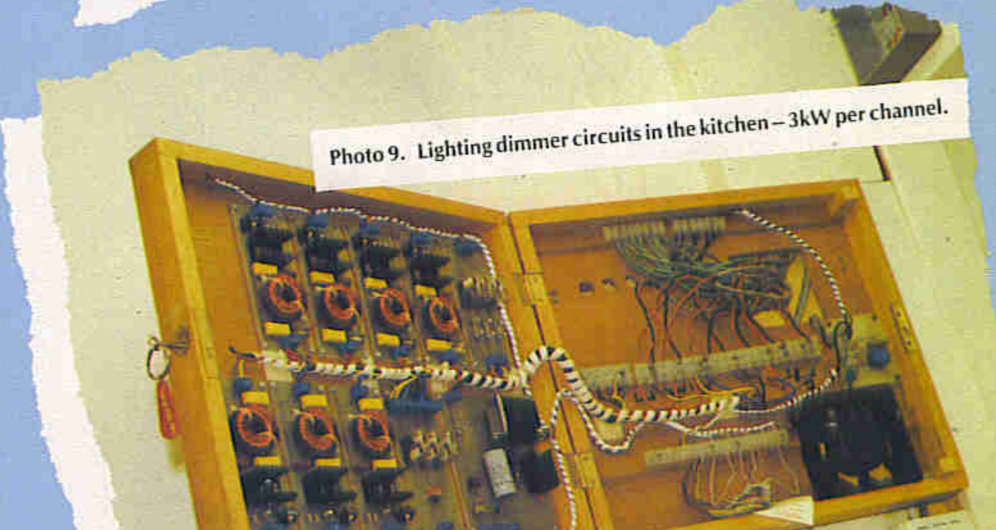

Photo 9. Lighting dimmer circuits in the kitchen – 3kW per channel.

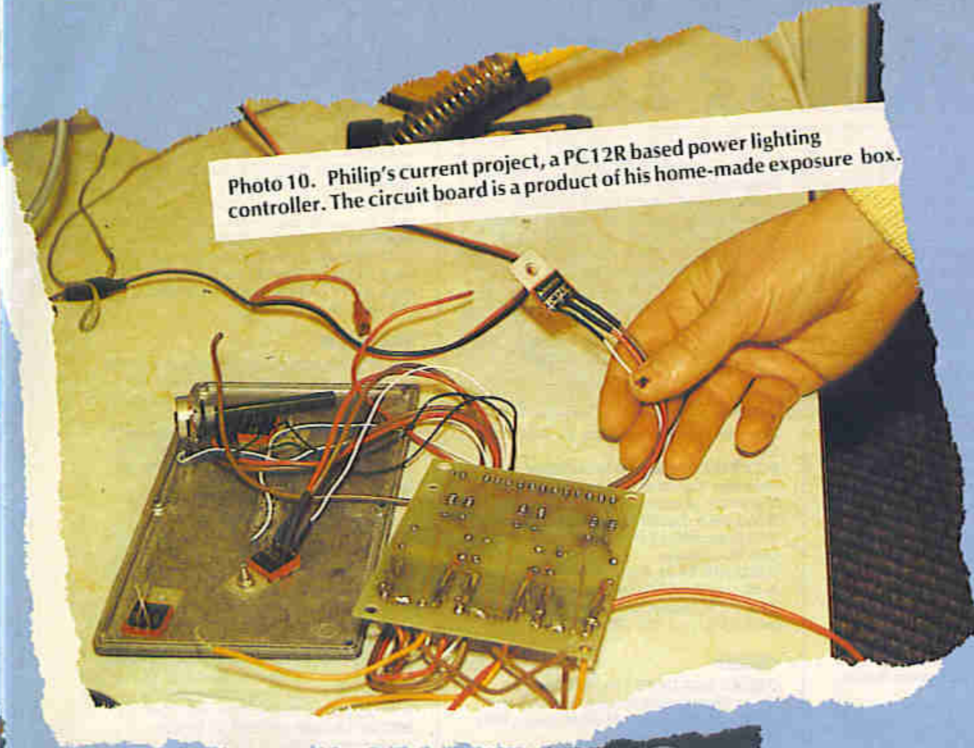

Photo 10. Philip's current project, a PC12R based power lighting controller. The circuit board is a product of his home-made exposure box.

Photo 11. A new three-way three kilo-watt footlights controller. "This is to my new level of specification – strong metal box. Expensive in terms of hardware, but then we don't want to electrocute our young people!"

very hard building, lots of brick walls, and the sound waves were bouncing around so much I couldn't get any real directionality out of it. For tape recording purposes it would have been okay, but not for amplification.

"At one point we were getting quite nasty feedback at a particular level. I built devices to try and find the particular frequency where we were getting problems and reduce the gain right back across a narrow band around that frequency, but in the end I did what I think professionals do, and that is to avoid the source of the problem by better positioning of the microphones and loudspeakers rather than trying to cure it electronically."

The workshop where much of this equipment came into being is a very small box room in Philip's home. In the small space available quite an impressive collection of equipment and spare parts has built up.

"Anybody who dabbles in electronics has to have a fair stock of parts or else it gets very frustrating when you're making something and you haven't got the components you need. Anyway, you accumulate after a while. In the end I just bought a few cabinets and made sure I'd got some of all the popular values of resistors, capacitors, potentiometers, all sorts of useful things.

"With more and more equipment to plug in I began to have christmas trees of connectors and things sticking out of the wall, which wasn't really very satisfactory, so I recently installed plenty of power sockets. I also now have one main power switch at the end so that when I leave the room I can be sure everything is isolated."

"My most recent acquisition is the Maplin dual tracking regulated power supply (XG95D). Before that I had the Heathkit one, one of the very first Heathkits I built, and it worked well for many years. I have a signal generator (YB81C) for audio purposes, and a home made exposure box for making printed circuit boards. I built the Maplin sixteen channel logic tester, which plugs into the oscilloscope. The scope itself was bought from your Hammersmith shop many years ago and has done extremely well. They are excellent for learning about things. I use it a lot for analysing mains waveforms with triac control circuits, something I've experimented with a lot for lighting purposes."

It is the upgrading of the lighting system in the church which is currently occupying most of his attention. "This is a very multi-purpose hall – it's used for youth evenings, visiting rock bands, pantomimes at christmas, and all sorts of things. There are presently five three-way lighting tracks which our various spots plug in to. In the kitchen is a twelve-way dimming circuit which is remote-controlled from inside the hall by a slider control panel which plugs into the wall.

"The dimming circuit is quite old. It's in a wooden box, which I wouldn't use again – I think one's got to be a bit more conscious of safety when you've got a certain amount of heat generated. As a bit of an afterthought I had to put a fan in.

"The dimmers are based on a published design, and take up to 3kW of lighting of each track. It's got a few safety devices built in – it won't work unless there's a satisfactory earth connection, for example. There's also some fairly hefty radio frequency interference suppression coils in there. It's proved reliable but I would like to upgrade it to something better.

"That is the most recent thing I've been working on. I'm using the PC12R which is quite expensive but superb (and sadly, no longer available from Maplin). If you put the waveform up on the oscilloscope it beats anything I've ever made out of triacs, but I'm having difficulties in terms of remote controlling it because unfortunately the control circuitry, although taking very low current, is still at mains voltage. I would really like someone to come up with a good quality triac based light dimming circuit capable of powering something like 3kW – there's no end of circuitry for lower power available – remote controlled through low voltage, and we need to be able to suppress interference effectively – all of which is currently exceeding my knowledge of such things!"

Do any other readers have any bright ideas?

CLASSIFIED

If you would like to place an advertisement in this section, here's your chance to tell Maplin's 200,000 customers what you want to buy or sell, or tell them about your club's activities – absolutely free of charge. We will publish as many advertisements as we have space for. To give a fair share of the limited space, we will print 30 words free of charge. Thereafter the charge is 10p per word. Please note that only private individuals will be permitted to advertise. Commercial or trade advertising is strictly prohibited in the Maplin Magazine.

Please print all advertisements in bold capital letters. Box numbers are available at £1.50 each. Please send replies to Box Numbers to the address below. Please send your advertisement with any payment necessary to: Classifieds, Maplin Mag., P.O. Box 3, Rayleigh, Essex SS6 8LR.

For the next issue your advertisement must be in our hands by 1st February 1989.

VARIOUS FOR SALE

CONSTRUCTED MAPLIN DIGITAL DELAY LINE. Meticulously built, nicely finished, tested and working. £90 o.n.o. Tel: Simon (0691) 653142.

TRIO TS700 2M ALL-MODE TRANSCEIVER. 15 Watts. This is a good base station, built like a battleship. Recently re-aligned by Lowe's. Buyer collects or pays carriage. Price £250. C.G. Dixon, Kyrles Cross, Peterstow, Ross-on-Wye, HR9 6LD. Tel: (0989) 62715.

TWO 50W AMPLIFIERS. Maplin LW35Q with two separate power supplies, case, £35; ETI System A Pre-Amp, two separate power supplies, case, £25; Spectrum 48K, £50. Tel: Bristol (0272) 422666.

OSCILLOSCOPE. Crotech–3132, 20MHz, dual trace, component comparator, triple D.C. outputs, 5V and 12V regulated, condition as new, 10 × 8cm display, switched probes, handbook. Exchange for H.F. transceiver (FT77, TS130S etc). Tel: Keith (0543) 360372 (West Midlands).

VARIOUS SERVICE MANUALS/SHEETS. Offers invited. Tel: 01-568 6014.

TELEQUIPMENT S43 OSCILLOSCOPE. DC–15 Meg, complete with probe and original service manual, good working order. £35. Tel: 061-220 0440.

WIRELESS WORLD. Jan. 76 to Nov. 82. Also ETI, Jan. 76 to Sept. 86. Also Elektor, Jan. 83 to Sept. 86. Complete years. Offers. Tel: D. Scott, (0256) 712647.

TWO MAPLIN 150W MOSFET AMPS. Complete with power supply, audio grade capacitors and 625VA mains transformer, in aluminium case. Offers over £100. Tel: (0342) 312796.

HITACHI H-PACK MOSFETS. 2SJ99, 2SK343. Offers for the lot or will split, 20 pairs approx. Tel: (0424) 442750.

MULLARD VALVE VOLTMETER. With Triode probe, Model E7555/2, no handbook. Offers. Tel: Liss (0730) 892487.

YAESU FT7. 25W, QRP, HF, amateur TX/RX boxed, with mic, power lead (12V), mobile mounting bracket and manual. £120 or exchange W.H.Y.? Tel: Bob, (0932) 247486, evenings.

KENWOOD TRIO R2000 COMMUNICATIONS RECEIVER. As new, with fitted V.H.F. converter. Datong active twin head aerial with mast, V.H.F. aerial, A.T.U. frequency books, complete. £550. Tel: Hastings (0424) 425265, evenings.

METRIX 5–210MHz frequency swept R.F. generator, £36; Heathkit V/7AU electronic voltmeter, £25; Maplin Wordmaker Computer Speech Synthesiser, £25; Cirkit & Elektor logic probes, £6 each. Tel: (0502) 566026.

TAMIYA STRIKER. Fully working condition, spares, (3 chassis, body and more), with Acoms Techniplus outfit including Nicads, fast charger and drive Nicad. £100-£110. Tel: Graham (0444) 459651.

EPROMS. Used once, erased, 135 of 2716, £2.25 each; 581 of 2732, £2.50 each. Includes P&P. Cheques to R. Cox, 25 Constable Road, Felixstowe, IP11 7HN. Offers for lot?. Tel: (0394) 286286, evenings.

555 TIMER ICs. Brand new, only 24p each or 20 for £4.40, post included. Also low-cost electronic kits with free repair service. S.A.E. to: S. Lord, 6 Stubbing Brink, Hebden Bridge, HX7 6LR.

MAPLINS SECURITY SYSTEM. Comprising: Burglar alarm kit LW57M, LW58N, LW98G, LW97F and six off LW59P. All in perfect working order, genuine reason for sale. £100 o.n.o. Tel: Nuneaton (0203) 329723.

BRAND NEW Vero Easiwire kit, £9.50; New Vero-block kit complete with component panel and designer pad, £6. Contact: Mel Saunders, 7 Drumcliff Road, Thurnby Lodge, Leicester, LE5 2LH.

COMPUTERS

OLIVETTI BCS 2030 BUSINESS COMPUTER. Twin 8" disk drives, internal 18" roll or fanfold paper printer, magnetic card. Minor fault. £150. Tel: M. Tollett, Oxford (0865) 53483.

DECWRITER COMPUTER TERMINAL. Heavy duty dot matrix printer mechanism, keyboard, PSU and control electronics. Contains low voltage Stepper motor, £12; Ratemeter and PSU modules, £3. Tel: (0689) 55965.

PC/XT USER. Wishes sale/exchange vast collection American IBM Public-Domain/Shareware programs with similar private British users. Details from Douglas Paterson, 18-6 Concepcion Drive, Villa Teresa, Angeles City, Philippines.

SINCLAIR ZX 81. Full size keyboard with number pad, 64K Eprom memory chip, 16K RAM pack, manual and games included. Will sell for £30 o.n.o. Tel: (0564) 775802.

CLUBS

ORGAN BUILDING. Join the Electronic Organ Constructors Society. Send to Ron Jenkins, 11 The Mead, Abridge, Essex, RM4 1DB. Tel: (0378) 812933.

INTERNATIONAL COMPUTER CLUB. For users of all micro's (PC, BBC, ST etc). English journal. Members in many countries. Write to COMPUSER, Jacob Jordaensstraat 15, 2923CK Krimpen a/d Ijssel, The Netherlands.

FRACTALS. New newsletter about fractal images on home computers is interested in contacting possible readers and contributors. Emphasis will be on practical programs. Fractal Report, Westowan, Porthtowan, Truro TR4 8AX.

MUSICAL FOR SALE

SPECTRUM SYNTHESISER. (Recent Maplin Project). Brand new, fully constructed, complete with Digisound CEM IC's and manuals, etc. Needs slight attention. Kit parts cost £350, will sell for £165 o.n.o. Quick sale. Tel: Colchester 563445, after 6p.m.

MAPLIN MES 53 ORGAN. With auto rhythm, no pedals, £150. Tel: Peter, (0705) 596087.

MAPLIN 3800 SYNTHESISER. Working but requires some tidying, complete with manuals, £90 o.n.o.; DM02(T) Organ Master Oscillator, boxed and unused, £10; Similar but used, £7.50. Tel: (0249) 650926.

UNFINISHED PROJECT. Maplin Organ Model 53. 80% assembled, 2 × 61 note keyboards, 31 note pedal board, 38 preset stop, drumsette unit. Offers. Tel: (0527) 43230.

MAPLIN MATINEE ORGAN. In perfect working order, beautiful sounds + original book and stool. First to hear will buy. £400 o.n.o. Buyer collects. Tel: 061-338 4696 (Manchester), after 6p.m.

WANTED

HELP! My Solatron CD1183 oscilloscope will not focus or produce a trace. Can anyone help? Mr. G. Mays, Rayford, Chobham Road, Knaphill, Woking, Surrey.

AVO VALVE data handbook and manual for Heathkit GR54 urgently required. J.H. Coles, 18 Bilford Avenue, Worcester WR3 8PJ. Tel: 0905 56818.

WANTED two FND 357 7 segment LED displays. Tel: Ron 06476 753.

WANTED electrostatic DC voltmeter must read up to 20kV. Tel: 0621 742293 after 7pm.

WANTED circuit layout, manual required for a Philips 595 receiver which I am attempting to resuscitate. Any help appreciated. J.H. Coles, 18 Bilford Avenue, Worcester WR3 8PJ. Tel: 0905 56818.

EDDYSTONE 888A receiver, and/or RCA AR88D wanted. Mint external condition not essential, but must be in good standard working order. 'Phone Peter on 066262 371.

MAINS TRANSFORMER for Heathkit oscilloscope model 10-12U, part No. 54-503, for otherwise healthy 'scope. Peter Metson, 159 Lonsdale Drive, Enfield EN2 7NB. 01-363 9923.

OLD TELEPHONES and or spares wanted, any quantity, any condition, will collect. I have some swaps, 'phone Mark on 01-761 7259.

URGENT operational tape software wanted for Mapsat/Amstrad CPC 464. Write to R.S. Hanson, c/o Officers' Mess, RAF Wildenrath, BFPO 42.

WANTED Sharp MZ80K Expansion Box disc drive, printer, disk programs, etc. Please write Mr. J. Nicholson, 19 Ross, Ouston, Co. Durham DH2 1LB.

WANTED books to buy: Radio Control for Beginners; How to Make Walkie-Talkies; Servicing With The Oscilloscope. Send details to: Wilson Oppong, 57 North Grove, Tottenham, London N15.

Continued from page 71.

AUDIO AND VIDEO MODULATOR PARTS LIST

RESISTORS: All 0.6W 1% Metal Film

R1	75Ω	1	(M75R)
R2	1M	1	(M1M)
R3	1k5	1	(M1K5)
R4,8	1k	2	(M1K)
R5	6k8	1	(M6K8)
R6	100Ω	1	(M100R)
R7,15	220Ω	2	(M220R)
R9	10Ω	1	(M10R)
R10	100k	1	(M100K)
R11,13,14	4k7	3	(M4K7)
R12	27k	1	(M27K)
RV1	1k Hor Encl Preset	1	(UH00A)
RV2	2k2 Hor Encl Preset	1	(UH01B)
RV3	47k Hor Encl Preset	1	(UH05F)

CAPACITORS

C1,3,5,8,9,13,14,15	100nF Minidisc	8	(YR75S)
C2	1n8F Ceramic	1	(WX71N)
C4,12,16	100μF 16V Minelect	3	(RA55K)
C6	220μF 16V P.C.Electrolytic	1	(FF13P)
C7	10μF 16V Minelect	1	(YY34M)
C10	4μ7F 35V Minelect	1	(YY33L)
C11	220pF Ceramic	1	(WX60Q)

SEMICONDUCTORS

D1	1N4148	1	(QL80B)
D2	1N4001	1	(QL73Q)
ZD1	BZY88C11	1	(QH15R)
LD1	Mini LED Red	1	(WL32K)
RG1	78L05AWC	1	(QL26D)
TR1	BF244A	1	(QF16S)
TR2	BC179	1	(QB54J)
IC1	LF353	1	(WQ31J)

MISCELLANEOUS

MD1	UM1286 Modulator	1	(BK66W)
PL1	6 Way Minicon Latch Plug	1	(YW12N)
PL2	4 Way Minicon Latch Plug	1	(YW11M)
S1	Sub-Min Toggle A	1	(FH00A)
	P.C. Board	1	(GE09K)
	6 Way Minicon Latch Hsg	1	(BH65V)
	4 Way Minicon Latch Hsg	1	(HB58N)
	Minicon Terminal	1 Pkt	(YW25C)
	DIL Socket 8 Pin	1	(BL17T)
	Constructors Guide	1	(XH79L)

OPTIONAL	AC Adaptor Unreg. 300mA	1	(XX09K)
	Preset Trimmer	1	(BR49D)
	Video Lead 6	1	(FV90X)

The parts listed above, excluding Optional, are available as a kit, which is not shown in our 1989 catalogue:
Order As LM78K (Aud/Vid Modulator Kit) Price £14.95
The following item is also available separately:
Aud/Vid Modulator PCB **Order As GE09K Price £3.50**

Maplin PROJECT BOOKS

All the projects you ever wanted.


PROJECTS BOOK 1


PROJECTS BOOK 2

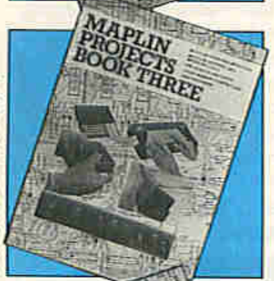
PROJECTS BOOK 3


PROJECTS BOOK 4


PROJECTS BOOK 5


PROJECTS BOOK 6

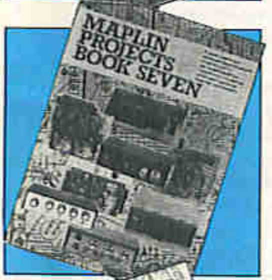
PROJECTS BOOK 7

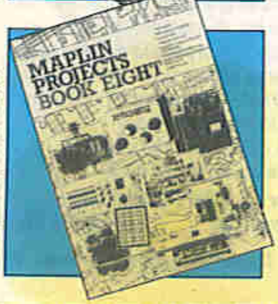
PROJECTS BOOK 8


PROJECTS BOOK 9


PROJECTS BOOK 10

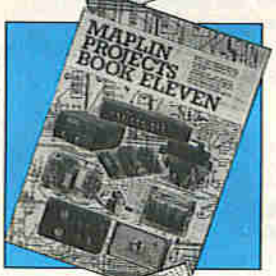
PROJECTS BOOK 11

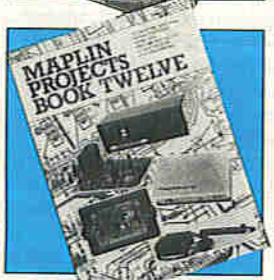
PROJECTS BOOK 12


PROJECTS BOOK 13


PROJECTS BOOK 14


PROJECTS BOOK 15


PROJECTS BOOK 16


PROJECTS BOOK 17


PROJECTS BOOK 18


PROJECTS BOOK 19


PROJECTS BOOK 20


ELECTRONICS 21


ELECTRONICS 22


ELECTRONICS 23

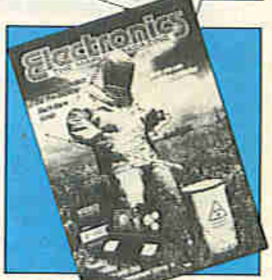
ELECTRONICS 24

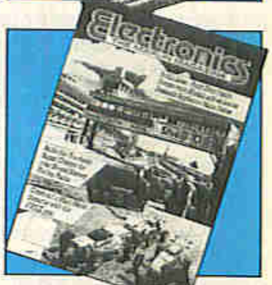
ELECTRONICS 25

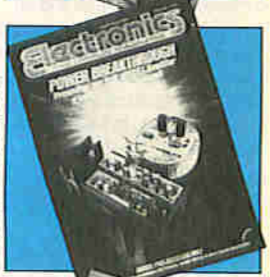
ELECTRONICS 26


ELECTRONICS 27


ELECTRONICS 28

For full details see Page 55

NEW BOOKS

More Advanced Electronic Security Projects

by R.A. Penfold

Intended primarily as a sequel to *'Electronic Security Devices'* this book provides a number of slightly more complex projects that, it is hoped, should be within the capabilities of most electronics hobbyists including beginners. Ease of construction should be ensured as in all cases stripboard layouts have been provided.
Although the projects are not substantially more complex than those in the earlier book they do use more advanced techniques. The projects include a passive infra red detector that can be used with a variety of lens systems, a fibre-optic loop alarm, computer based alarms and an unusual form of ultrasonic intruder detector. Some of the designs are for use as part of a burglar alarm system rather than as stand alone projects.
1988. 95 pages, 111 x 178mm, illustrated.

Order As WS25C (Adv Elec Security Projects) Price £2.95NV

Switches

by Ian R. Sinclair

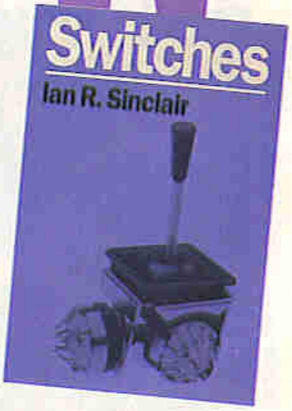

Virtually every electronic device makes use of at least one switch, and yet most texts and courses in electronics take switches and switching action completely for granted. This is despite the fact that switches, of which there is a vast variety, have to be specified by the design engineer, and maintained and replaced by the service engineer or technician, all of whom need information on this component just as much as for any other device in a circuit.
This book covers low voltage and low current switches which are used mainly in electronics circuit applications. The voltage range of up to 250V and the current range of up to 20A are covered, so far as supply-voltage switches are concerned. But the book also covers other waveforms – the audio, video, digital and VHF/UHF switching requirements that are now increasingly met with. The listing of standards and legislation will assist in the selection of switches for applications where choice may be restricted because of legal requirements or because work is being done to military or other standards.
The book will be of great value to electronics engineers, students, technicians, and anyone who is required to specify electronics components.
1988. 100 pages, 153 x 234mm, illustrated.

Order As WS26D (Switches) Price £9.95NV

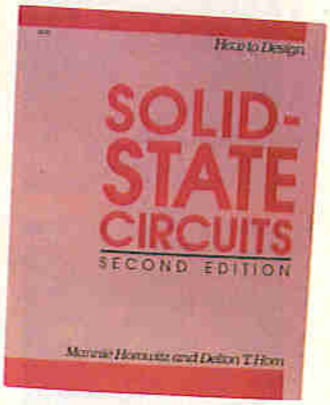

How To Design Solid State Circuits

by Mannie Horowitz and Delton T. Horn

This revised book provides exact data on every aspect of semiconductor design; performance characteristics, applications potential, operating reliability, and more! Four major categories of semiconductors are examined; diodes, transistors, integrated circuits, and thyristors. Discussion begins with devices made of individual semiconductors leading into a description of the semiconductor diode and its many functions in the modern circuit.
The DC bias and stabilisation conditions for bipolar and field-effect transistor (FET) devices are presented and the use of semiconductors in audio and radio-frequency (rf) amplifiers using a varying input signal are discussed. Emphasis is placed on digital-circuit design along with its many variations. Designs using both integrated circuits and discrete components are described. Discussion of silicon-controlled rectifiers and other lesser-known thyristors is also presented. New material covers additional semiconductors including zener diodes, tunnel diodes, light sensitive diodes, unijunction transistors, phototransistors, and microwave semiconductors.
Ranging from simple temperature-sensitive resistors to integrated circuit units composed of multiple microcircuits, this book describes a host of the latest in solid state devices.
1988. 360 pages, 188 x 234mm, illustrated. American book.

Order As WS28F (Design Solid-State Ccts) Price £13.20NV

Understanding Magnetism

Magnets, Electromagnets and Superconducting Magnets

by Robert Wood

Magnetism is one of the fundamental forces in the universe. This book examines the world of magnetic phenomena and its relationship to electricity. Covering all aspects of this science, it defines magnetism and geomagnetism and explains natural magnetic phenomena such as the northern lights and magnetic effects on our weather.
It covers the history of magnetism from the discovery of the loadstone to scientific pioneers of today – from Hippolyte Pixii through Joseph Henry, Wilhelm Weber, James Clerk Maxwell and Nikola Tesla. It also explains magnetic materials and their uses – including ferromagnetic, paramagnetic, and diamagnetic; describes the variety of ways magnetism is used in our homes and in industry; illustrates DC circuits and introduces basic semiconductors, coils, and electromagnets; covers basic AC circuits, transformers, and more.
This book also explains DC motors and generators including the different types of motors and their uses, discusses how magnetism is used in everything from tape recorders and doorbells to electron microscopes and particle accelerators to its effects on our environment, plus it provides thirteen illustrated projects in experimenting with and understanding magnetism.
1988. 178 pages, 188 x 234mm, illustrated. American book.

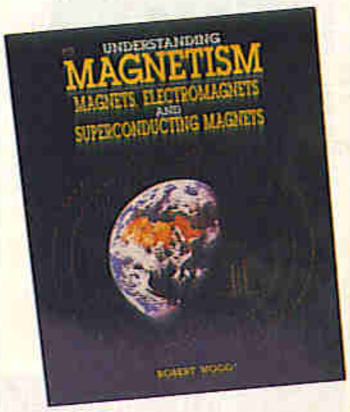

Order As WS29G (Understanding Magnetism) Price £8.45NV

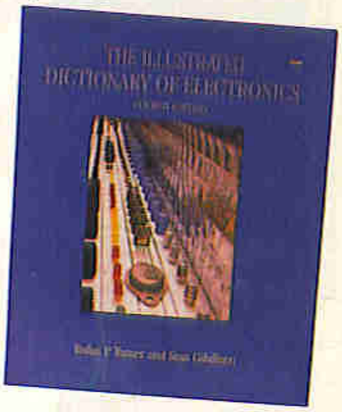

The Illustrated Dictionary of Electronics

by Rufus P. Turner and Stan Gibilisco

This collection of terms is *the* most comprehensive dictionary available. Including all practical electronics and computer terms, it is as up-to-date as the latest advances in the field itself!
Tables and data on subjects most often consulted for projects and experiments are included. Other conversion tables include English/metric and metric/English conversions for units of measure of energy, power, and volume, and Fahrenheit/Celsius temperature conversion charts.
Setting this edition apart from other electronic dictionaries is its emphasis on illustration. Featuring more than complete definitions, this fourth edition is packed with over 450 detailed drawings and diagrams.
All entires are listed in alphabetical order, abbreviations and initials are listed in sequence with whole words, all terms of more than one word are treated as one word, and catch words for the first and last entries appear at the top of each page to give you quick and easy access to all terms.
It's all here – more than 27,000 terms used in electronics today!
1988. 648 pages, 188 x 234mm, illustrated. American book.

Order As WS27E (Dictionary of Electronics) Price £18.75NV

NEW SHOPS NEW SHOPS NEW SHOPS NEW SHOPS NEW SHOPS NEW SHOPS

MAPLIN'S 9 REGIONAL SHOPS HELP SERVE YOU BETTER!

Birmingham:
Sutton New Road, Erdington. Tel: 021 384 8411.
Bristol:
302 Gloucester Road. Tel: 0272 232014.
London:
159-161 King Street, Hammersmith. Tel: 01 748 0926.
146-148 Burnt Oak Broadway, Edgware. Tel: 01 951 0969.
Manchester:
8 Oxford Road. Tel: 061 236 0281.
Southampton:
46-48 Bevois Valley Road. Tel: 0703 225831.
Southend-on-Sea:
282-284 London Road, Westcliff-on-Sea, Essex.
Tel: Southend-on-Sea (0702) 554000.
Leeds:
Carpet World Building, Regent Street.
Tel: 0532 449200.
Nottingham:
86-88 Lower Parliament Street.
Tel: 0602 410242.

For mail order enquiries, please *do not* call our shops as they will be unable to help you.

NEW SHOPS IN LEEDS & NOTTINGHAM

OPENING BY THE END OF THE YEAR, PLEASE RING BEFORE TRAVELLING

Before you send your next order to us by post, take a look and see if there's a Maplin shop near you. In our shops you'll find that personal service that even the best mail-order operations cannot match. And you can look at the products before you buy. If you're coming for a particular item, a quick phone call will enable you to be certain the shop has everything you want in stock.

Our shops are pleased to accept Access, Barclaycard, Connect, American Express, Mapcard and cheques up to £50 with a cheque guarantee card. We'll even accept ordinary money as well!

All our shops are close to excellent parking facilities, meters in London and Manchester, and free elsewhere.

The South

In the South our Southampton store is conveniently placed for easy access from all parts of Hampshire and surrounding counties, and is 15 minutes from Portsmouth.

London

Our London store now open 6 full days a week is situated just to the west of the pedestrian shopping centre in Hammersmith, and is just five minutes from the end of the M4 and only a short walk from the District, Piccadilly and Metropolitan lines' Hammersmith station. Our Burnt Oak store is on the main Edgware Road at the corner of Burnt Oak Broadway and Barnfield Road, opening soon.

East Midlands

Our Nottingham store, opening late 1988 for a full 6 days a week, can be found on the north east corner of the city's ring road just a few minutes from the city centre. We are just 10 minutes drive from the M1, junction 25 or 26.

West Midlands

In the Midlands, our self service Birmingham store now open 6 full days a week is just 3 minutes from the M6. Turn north at Spaghetti Junction (junction 6), onto the A5127 following the signs to Erdington. As you approach the Erdington roundabout, you'll see the store's 50 space car park directly in front of you.

South-East

Essex and Kent are served by our self-service Southend shop now open 6 full days a week which is right on the A13, just 2 minutes before you reach the centre of Southend. And we're only 30 minutes from the M25 (junction 29) as well.

Yorkshire

Our shop in Leeds, opening late 1988 for 6 full days a week, is located in Regent Street just a few minutes walk from the city centre. By car, we are near the end of the M1 and M621 to the south.

West

Our West country store in Bristol is open a full 6 days per week. The self-service store can be found on the A38 Gloucester Road, midway between Bristol city centre and the Filton airport.

The North West

Our self-service store in Manchester, now open 7 days a week, serves the North and is just off the Mancunian Way, opposite the BBC, about 5 minutes from the end of the M602 or junction 10 on the M63.

All our shops are open from 9a.m. to 5.30p.m. Monday to Saturday (9.30a.m. Wednesday). In addition Manchester is open Sundays. All shops are closed on Public Holidays. Shops do *not* close for lunch.

There's a friendly welcome in store for you at any Maplin shop. Our helpful staff may often be able to help with a technical problem or a constructional difficulty.

Call in at a Maplin store and get what you want today. We look forward to serving you.

NEW SHOPS NEW SHOPS NEW SHOPS NEW SHOPS NEW SHOPS NEW SHOPS

THE NEW MAPLIN CATALOGUE IT'S OUT OF THIS WORLD

SEND FOR YOUR COPY TODAY

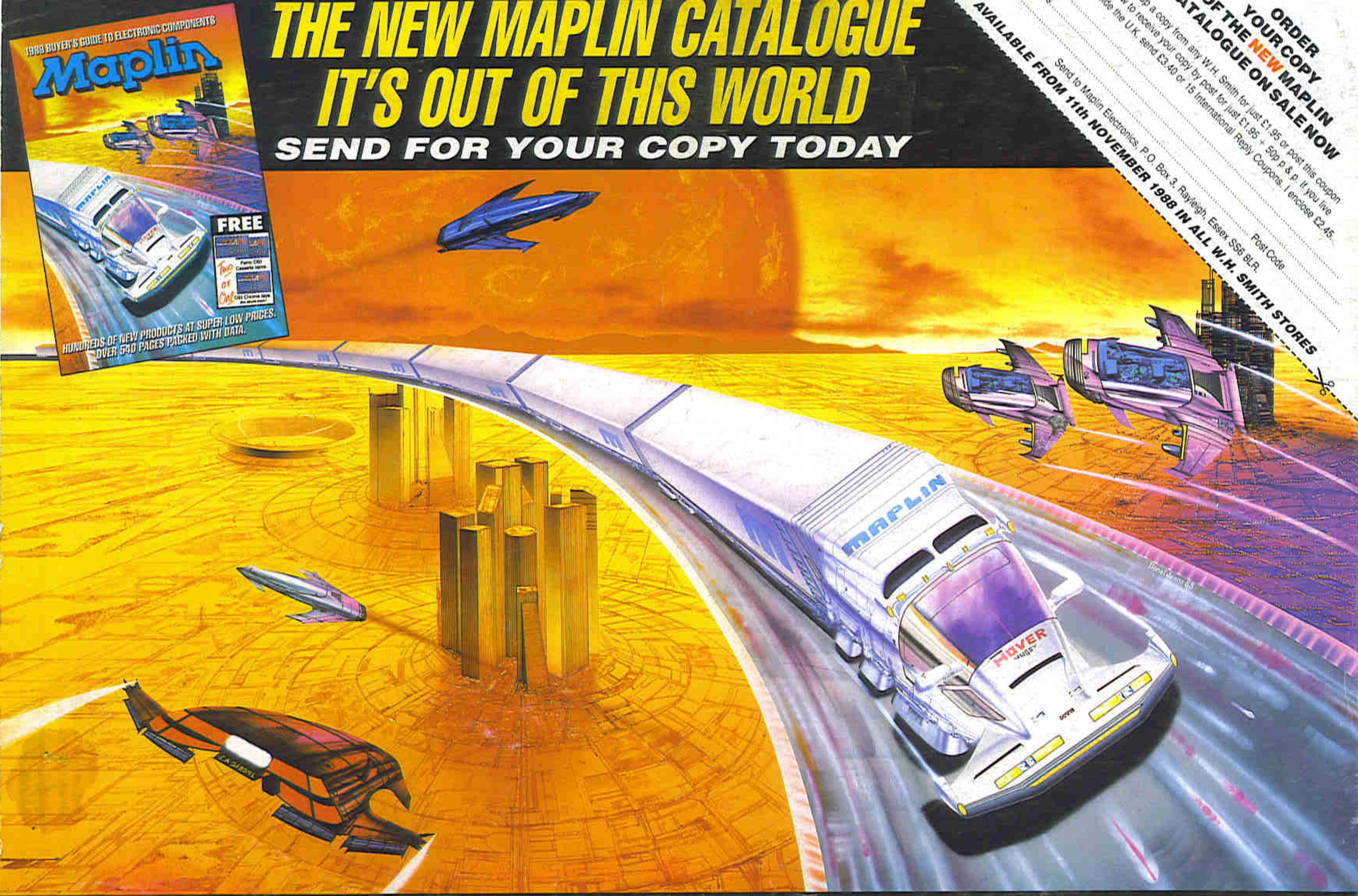

ORDER YOUR COPY OF THE NEW MAPLIN CATALOGUE ON SALE NOW

Pick up a copy from any W.H. Smith for just £1.95 or post this coupon now to receive your copy by post for just £1.95 + 50p p & p. If you live outside the U.K. send £3.40 or 15 International Reply Coupons. I enclose £2.45.

Name...

Address...

Post Code...................

Send to Maplin Electronics, P.O. Box 3, Rayleigh, Essex SS6 8LR.

AVAILABLE FROM 11th NOVEMBER 1988 IN ALL W.H. SMITH STORES

Evening on the planet Oldana, as the Maplin Juggertrain thunders along the highway; captured on canvas by galaxy famous artist Lionel Jeans and featured on the cover of the new Maplin Catalogue.