CANADA'S OWN ELECTRONICS MAGAZINE

$1.25

electronics today

GG70409

JANUARY 1979

ROBOTS:
Toys For Kids Or Tools For Society?

Digital Tachometer

Log-Exp Converter

FM Broadcaster

Voltage-Current Transactors

Getting Into Video

Canadian Projects Book Number One gives you twenty-five projects from issues of ETI sold in Canada.

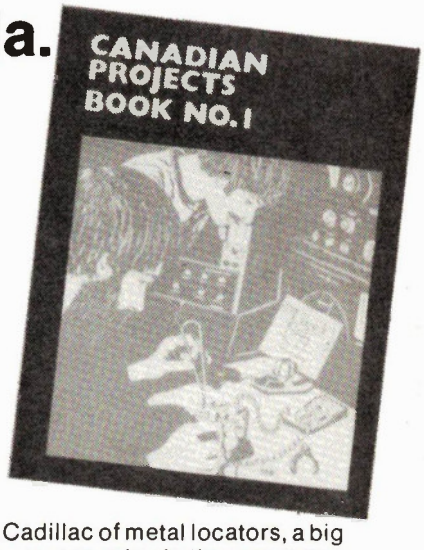

THE BEST OF ETI

For Only $3.00!

This book is a must for all Canadian electronics enthusiasts. We show you how to make your own digital voltmeter, and an injector-tracer for your test-bench.

Then you can set about building our induction balance metal locator — this is the Cadillac of metal locators, a big improvement on the usual BFO types. And when you are out searching for treasure you can relax in the assurance that our burglar alarm project is watching over your home (to make sure no-one steals your valuable Canadian Projects Book).

While you are building our electronic version of the Mastermind game you can keep your kids/parents/roommates occupied with your homebuilt reaction tester and double dice games. If the excitement gets too much you can relax with our biofeedback GSR (Galvanic Skin Response) meter (and if you want to do more experiments with biofeedback you can build our heart-rate monitor).

Another project for the experimenter is our sound-activated photographic flash trigger. With this device you can photograph a bullet leaving the barrel of a gun, or a balloon bursting, etc.

In addition to the projects mentioned above we have designs for fifteen audio projects. Eight of these can be connected together to make the mixer and power-amp sections of a discotheque sound system. For the musician we have plans for a fuzz box and for a phaser; for the beginner in electronic music we have our clever twenty-five note electronic organ which uses a touch-sensitive keyboard etched into half of the single PCB (and we include variable-depth tremolo, volume control, and two voices).

For the hi-fi enthusiast we have do-it-yourself instructions on how to build a simple LED indicator to tell you when you are overloading your amplifier. If you aren't getting the bass response you would like from your speakers you can build up a little gadget to put that right. If you are more adventurous with your sound system you will be interested in our audio limiter. This project can be used to protect your group's amplifiers from distorting when high-level signals are produced, it can be used to compress the dynamic range of a signal for recording or addressing public meetings, or it can be used as a voltage-controlled volume control for remote or automatic adjustment.

There's got to be something in this book for all ETI readers. All the projects have been reworked since they were first published to update them with any information we might have received about availability of components, improvements, etc.

All for the amazingly low price of three dollars.

To order Canadian Projects Book Number One send $3.00 per copy (no extra to cover postage) to Canadian Projects Book, ETI Magazine, Unit Six, 25 Overlea Blvd, Toronto, Ontario, M4H 1B1.

JANUARY 1979
Vol. 3. No. 1.

Editor
STEVE BRAIDWOOD BSc

Assistant Editor
GRAHAM WIDEMAN BASc

Advertising
Advertising Manager
MARK CZERWINSKI BASc
Advertising Services
SHARON WILSON
Advertising Representatives
JIM O'BRIEN
Eastern Canada JEAN SEGUIN & ASSOCIATES INC., 601 Cote Vertu, St. Laurent, Quebec H4L 1X8. Telephone (514) 748-6561.

Subscriptions Department
BEBE LALL
Accounts Department
SENGA HARRISON
Layout and Assembly
GAIL ARMBRUST
Contributing Audio Editor
WALLACE J. PARSONS

EDITORIAL AND ADVERTISING OFFICES
Unit 6, 25 Overlea Boulevard,
Toronto, Ontario, M4H 1B1
Telephone (416) 423-3262

Second Class Mail registration number 3955. Return postage guaranteed. Post Office returns to Unit 6, 25 Overlea Boulevard, Toronto, Ontario, M4H 1B1.

Published by Electronics Today International (Canada) Ltd.

Printed by Livingstone Printing Ltd.

News Stand Distribution Gordon & Gotch, Toronto.

Copyright: All material is subject to world-wide Copyright protection. All reasonable care is taken to ensure the accuracy of the information.

ALL ETI PCB PATTERNS ARE COPYRIGHT. NO COMPANY MAY SELL BOARDS TO OUR DESIGNS WITHOUT OUR PERMISSION.

INTERNATIONAL EDITIONS
Electronics Today International
25-27 Oxford St., London W1R 1RF, UK.
Editor Halvor Moorshead.

Electronics Today International,
Ryrie House, 15 Boundary St.,
Rushcutters Bay, Sydney, Australia.
Editor Collyn Rivers.

Electronica Top Internationaal,
Postbus 260, Emmen, Holland.
Editor Anton Kriegsman

Elrad,
Kommanditgesellschaft, Bissendorfer Strasse 8, 3000 Hannover 61, Germany.
Editor Udo Wittig.

electronics today international

INCORPORATING ELECTRONIC WORKSHOP

PROJECTS

DIGITAL TACHOMETER 31
A design with good resolution AND response time.
LOG-EXPONENTIAL CONVERTER 34
Stable and accurate, useful in music and other areas.
FM BROADCASTER 38
You too can be on the radio.

FEATURES

ROBOTS: SOME FACTS 14
What is really going on.
ROBOTS: BRAIN POWER 20
How much does a robot have . . . or need?
ROBOTS: BUILDING GUIDE 24
Tips for constructing your own.
VOLTAGE-CURRENT TRANSACTORS 42
A second look inside VCTs.
OBTAINING A VIDEO RECORDER 50
Getting Into Video, Part 2.
PRIMES AND GOLDBACH 63
ETI Softspot, calculator software.
ELECTRONICS IN CANADA 66
There is some, Jim Essex reports.
TECH TIPS 68
Ideas for experimenters.

NEWS & COLUMNS

NEWS DIGEST 4
AUDIO TODAY 9
Wally Parsons discusses trade shows.
MOC3010 OPTO-TRIAC COUPLER 47
Datasheet.
A NEW KIND OF SERVICE SHOP 55
Service News
QRM 58
Bill Johnson speaks out on RSO's repeater idea.
SHORTWAVE ANTENNAS 60
Shortwave World.
THE FUN OF ELECTRONICS 70

INFO & MISCELLANEOUS

Mini-Ad Information 8
Next Month's ETI 13
ETI Panel Transfers 13
ETI Binders 30
ETI T-Shirts 30
Model Railways 37
ETI Subscriptions 41
Electronics Paperbacks ... 56,59
ETI Circuits Book 57
ETI Marketplace 68
ETI Back Issues 69
Classified Ads 71
ETI Project File 72
ETI Publications 73
Reader Service Info 74
Advertising Index 74

NEWS DIGEST

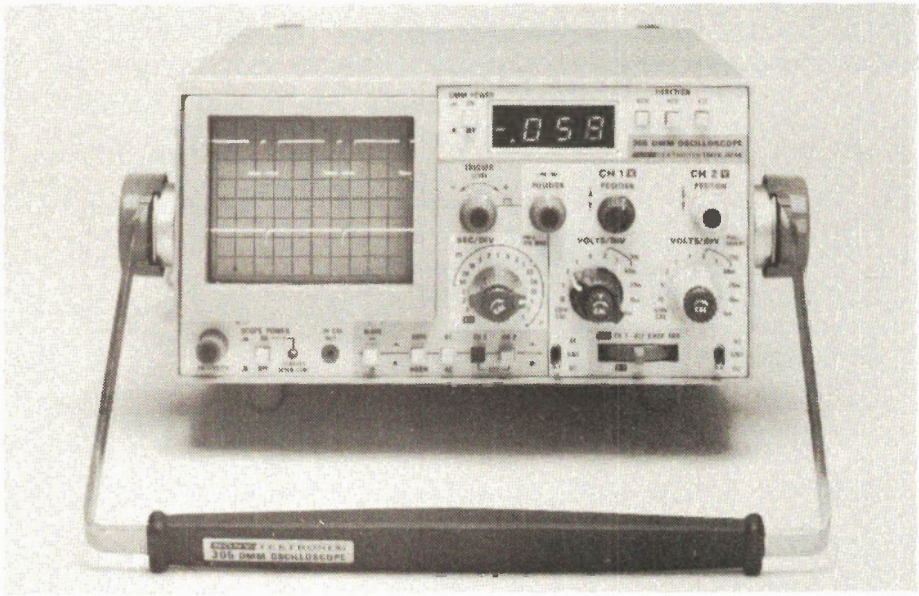

Scope/DMM

The TEKTRONIX 305 is claimed to be the first service instrument to offer 5 MHz performance, dual-trace displays, built-in rechargeable-battery power and a full function digital multimeter in a package weighing only 10 pounds and measuring only 4.4 x 9.3 x 14.2 inches.

The basic specs are as follows: Scope Vertical: Bandwidth 5 MHz; Sensitivity 5 mV; Modes: CH1, CH2, Chop, Alt, Add, Invert CH.

Scope Horizontal: Sweep Speed 1us/Div to 50ms/Div; Magnifier X10 (fastest sweep speed 0.1us/Div); Trigger Source: CH1, CH2, Ext.

The autoranging DMM has the following ranges 2,20,200,1000 DC volts; 2,20,200,700 AC volts; 2k, 20k, 200k,2000k ohms. Accuracy is +/-0.1%, +/-2 counts (DC); +/-0.5%, +/-10 counts (AC), +/-0.6%, +/-3 counts (ohms). Input Protection is 1000 V (DC range) or 100 V (AC or ohms). Input Z for volts is 10 Megohms.

Tektronix Canada Ltd., P.O. Box 6500, Barrie, Ontario, L4M 4V3.

LCD Pocket TV

Matsushita have developed a pocket TV with better resolution than any previous LCD type. 57,600 elements are arranged in a 240x240 matrix which measures 2.4 inches (presumably diagonally). But even though CMOS circuits are used the TV consumes 1.5 W.

Electrochromic Display

A display claimed to be more clear and visible than conventional LCDs has been developed by Sharp in Japan. The Electrochromic display (ECD if you want to impress your friends) will be mass-produced and marketed early this year. The main ingredient in this new device is sodium chloride solution (unfortunately I can't think up suitable seawater jokes right now).

D-A Book

The Application Guide To CMOS Multiplying D/A Converters (40 pages, soft cover) provides over 25 applications using multiplying digital-to-analog converters. These include measurement circuits, function generation, signal-conditioning, digitally programmable control circuits, programmable active filters and oscillator circuits, and audio and synchro applications.

Specific applications include automatic gain adjustment, audio panners, digitally programmable triangle/square wave function generator, power-series generator 4-20mA converter and digital phase shifter.

Available free from Analog Devices, Route 1 Industrial Park, PO Box 280, Norwood, Mass. 02062, USA.

Leader Catalogue

The Leader 1978/79 test instruments catalogue is now available from Omnitronix Ltd, 2056 South Service Road, TransCanada Hwy, Dorval, Quebec, H9P 2N4. There are eight pages giving the specs on nine scopes, followed by a page with a new curve-tracer and an electronic switch (to make your single-trace scope into a double-trace type). The next four pages show TV testgear, the following four show signal generators, and the five after those are dedicated to audio servicing. Three more pages of TV servicing equipment, then a couple of digital counters and a DMM. Then we have a couple of analogue AC millivotmeters and a FET multimeter and a transistor checker. Still in the analogue department are the LT-70B and LV-71 multimeter and FET-input multimeter. Then there's an impedance bridge and a page of ham gear (monitor scope, antenna coupler, SWR wattmeter, RF power meter, antenna impedance meter, and a transistorised dip meter). Add a page of accessories and you have a nice easy-to-read 36-page catalogue.

Triac Photo Trigger for 115V

Motorola has introduced a new optically-triggered Triac driver, designated the MRD3010/MRD3011. The device directly switches AC in the 3 V to 115 V RMS, 50 to 60 Hz range, eliminating any need for DC power supplies.

The MRD3010/11 has a blocking voltage of 250 V peak in either direction which greatly simplifies the design of a light-activated AC switch. Applications suggested include a contactless end switch, a light-level switch or a light controller.

The device is triggered into the on state with an irradiation level of 0.5 mW/cm² for the MRD3011, and of 1 mW/cm² for the MRD3010. In the on state the units will pass 100 mA peak in either direction with less than a 3 V drop across the device. Once on, it will remain there until the current drops below the holding current of 100 uA typically, when it reverts to the off state.

Packaged in the popular, 3-leaded TO-18, US prices, in 100-up quantities, for the MRD3010 and the MRD3011 are $1.50 and $1.60, respectively. Available from factory and distributor stock.

Boron-Diamond Stylus

A new stylus for phonographs uses boron welded to diamond. Its weight is considerably less than that of a solid diamond stylus and the price is reported as 75% less.

Microwave Transistor

Motorola has introduced a new series of microwave transistors. Intended for low-to-medium power amplification, the new transistor series features high gain (up to 15 dB (max) at 0.5 GHz) and a low noise figure (2 dB (typ) at 0.5 GHz and 10 mA).

There are five device types, hundred up US prices are:

BFRC96, unencapsulated chip, for all applications, $1.40.

BFR96 (Macro-T), for high-volume production, $1.75.

MRF961 (Macro-X), similar to Macro-T, but with 2.5 dB higher gain @ 500 MHz, $1.75.

MRF962 (metal/ceramic), for hostile environments where high reliability is required, $7.50.

MRF965 (TO-46), allows use in high gain Class C amplifiers up to 400 mW output power, $2.00.

More information on the BFR96 series may be obtained by writing to Motorola Semiconductors, PO Box 20912, Phoenix, AZ 85036, USA.

Remote Switch

All had a wild and crazy time at a recent ETI party — thanks to this little gadget from Electronics International. We only had it controlling the lights, but even so it seemed like fun at the time. Well, its going to sound disappointing after that build up but all this thing does is switch on or off (toggle fashion) when it hears a high pitched whistle. To make it easy on the anatomy a plastic whistle (squeeze not blow) is provided. The note is at the upper limit of the hearing range of the typical ETI staff member. It is possible to trigger the switch by dropping a metal corkscrew on the kitchen floor, or by clapping loudly, or by hissing as loud as you can.

From Electronics International, 296 Richmond Street West, Toronto, Ont. M5V IX2. Price $12.95.

ETCO Catalogue

We recently mentioned Etco's first USA catalogue. Now Marvin Birnbom has another, three times the size. The middle 16 of the 48 pages are called 'Etco Trading' — this is a catalogue for dealers and other volume buyers who qualify for wholesale prices. The rest is the usual surplus gear — good stuff that someone wanted to get rid of at a low price, because they couldn't use it anymore or because they needed the money. So for a few bucks you can pick up some quality expensive gear.

Like a Sansui CD-4 quad demodulator; from the front panel with its phono inputs and outputs and controls to the back panel this is real hifi quality. It has its own 110 V supply (giving 25 V DC regulated) and Etco has 1500 of them. Some parts may be missing but they're only $9.95 each if you buy three, $12.95 for one (note these are US prices). Other goodies are $1.99 tourguide receivers (120 & 180 kHz) from Expo '67, Minolta Super-8 movie cameras with remote-control modification (auto exposure, singleframe/18fps/32fps, motorised zoom lens, through-the-lens viewing) because they're ex security service ($69.95 no warranty), $6.99 cassette recorders (no playback) designed for movie sound recording, and Xerox billing kits (add-on unit for a photocopy machine, includes 3 Nixie displays and associated circuits) for $9.95.

Any readers wanting a copy of this catalogue can get one free from Etco Electronics, North County Shopping Centre, Plattsburg, NY12901, USA.

Canadian Solar Energy

Public Works Canada are pleased with the response to its Program of Assistance to Solar Equipment Manufacturers. One hundred and fifty-two applications have been received under the first phase of the program under this phase up to $10,000 has been awarded to each of 24 selected submissions so that these firms can prepare detailed proposals for the development phase of the program.

Since the overall objective of the program is to assist the development of the Canadian solar industry . an important criterion in the evaluation of the submissions will be the "Canadian content" section, with high points going to companies utilizing Canadian resources, both personnel and material, and doing their development and production in Canada.

The firms selected at this phase of the program will have until the end of this December to submit their development proposals. A maximum of 10 of these will be selected and awarded developmental contracts at the beginning of March 1979. These contracts could be worth up to $300,000 each and wil assist the successful firms in the development of their products and production facilities.

By mid-1980 Public Works Canada will publish a list of approved solar products and will continue to support the solar industry under its "PUSH" Program (Purchase and Use of Solar Heating) which will see up to $125 million made available for the preferential purchase of Canadian-made solar space and water heating equipment for Government of Canada buildings.

The Public Works Canada solar development program is part of an overall, five-year $380 million federal government program announced in July, aimed at the development of renewable energy in Canada.

Below we list the recipients of the $230,000:

BRITISH COLUMBIA	
Ecco Heating Products Ltd.	Burnaby
Marine Plastics (1968) Ltd.	North Vancouver
Solarsystems Industries Ltd.	Surrey
MANITOBA	
Inter-City Manufacturing Ltd.*	Winnipeg
E.H. Price Limited	Winnipeg
ONTARIO	
Amherst Renewable Energies Ltd.	Perth
Conserval Engineering Ltd.*	Downsview
Envirogetics Ltd.	Scarborough
GSW Research Centre	Mississauga
Hovey & Associates Ltd.	Ottawa
Murfin Heating & Cooling Ltd.	Downsview
NORTEC Air Conditioning Ind. Ltd.	Ottawa
Solar Panels Ltd.*	Burlington
Solartech Limited*	Toronto
Solatherm Energy Systems Ltd.*	Mississauga
Solco Energy Systems Ltd.	Toronto
Temspec - Temperature Specialties Manufacturers Ltd.	Downsview
Watershed Energy Systems Ltd.	Toronto
QUEBEC	
Atlas Asbestos Consortium	Montréal
Filochrome Inc.	Joliette
Solerco Ltd.	Ayer's Cliff
Thermo Solar Inc.	Montréal
NOVA SCOTIA	
Parrsboro Metal Fabricators Ltd.*	Parrsboro
PRINCE EDWARD ISLAND	
Island Solar Energy Consortium*	Charlottetown

** denotes consortium*

The last time you saw a really new bench/portable DMM was 1972.

In 1972, the Fluke 8000A set new standards in the DMM market with reliable LSI design and innovative benefits.

Now look at the Fluke **8010A** and **8012A** bench/portables destined to be problem-solvers for the eighties!

- Large, razor-sharp LCD readout.
- Touch and hold probe option.
- Fluke hybrid true rms converter with flat response to 50 kHz (within 3dB at 200 kHz).
- Real measurement power with six functions and 31 ranges.
- Conductance ranges for measuring leakage to 10,000 MΩ, also convenient for transistor beta and light intensity.
- Overload protection like no other DMM.
- Simple, extremely reliable single-chip CMOS design.

Choose the 8010A (10A high current) for $336 or the 8012A (0.001Ω resolution) for $420. Canadian prices including duty and federal sales tax.

Contact the ACA office nearest you:

ELECTRONIC CENTRES

Allan Crawford Associates Ltd.

TORONTO	MONTREAL	VANCOUVER	OTTAWA	CALGARY	HALIFAX
416/678-1500	514/670-1212	604/294-1326	613/829-9651	403/276-9658	902/469-7865

ACA Electronic Centres, Stocking Showrooms
Toronto: 6503 Northam Drive, Mississauga 416/678-1500
Montreal: 1330 Marie Victorin Blvd., Longueuil 514/670-1212
Calgary: 2280-39th Ave., N.E. Calgary 403/276-9658
Vancouver: 3795 William St., Burnaby 604/294-1326

Authorized distributors: Edmonton, Vernon, Winnipeg.

FLUKE®

NEWS DIGEST

Horizontal Deflection Transistor

Motorola has announced a new horizontal deflection transistor, the MJ12010, designed for transformer-operated CRT chassis. The new TO-3 device has a breakdown voltage (VCEX) of 950 volts, and a maximum collector current rating of 10 amps with a 0.6 usec fall time — for high energy scanning.

The combination of very high voltage, high current and very fast switching time places this transistor at the leading edge of technology for transformer-operated chassis.

The MJ12010 is priced at US $3.10, 100-up. For more information contact Motorola Semiconductors, PO Box 20912, Phoenix, AZ 85036, USA.

Digital/Analogue Watch

If you're like me you have an analogue watch and a digital one — the digital one was a present ('he's interested in electronics so lets get him one of those nice digital watches') but the analogue watch is the one I wear because it looks classier. Now you can solve the problem — people who like analogue watches will see you wear one, and people who want you to wear a digital watch have it their way too. The Citizen Quartz Digi-Ana uses a common quartz source to show time both analogue-style and digitally. My problem now is I'm not sure I want a watch with a name like Quartz Digi-Ana!

Scope Probe

A new, modular 100 MHz probe system for oscilloscopes and frequency counters has been announced by VIZ Test Instruments Group of Philadelphia. Consisting of screw-together elements, and compatible with all commonly-used scopes, the new universal probe system permits the user to add optional modules (such as a demodulator probe tip for US $9.00) instead of having to buy a complete additional probe system.

Priced in the States at $39.00, the new universal probe system, Model WG-478, includes a coax cable with direct probe and BNC connector, "low-cap" X10 adaptor with integral probe tip, compensator with male and female BNC connectors, spring-loaded hook-on probe element, ground clip assembly, and isolation boots which slip over the probe tip to eliminate the possibility of shorting. Frequency response is DC to 100 MHz (-3dB) using an optional BNC probe (US $6.00), or DC to 70 MHz using either the hook-on

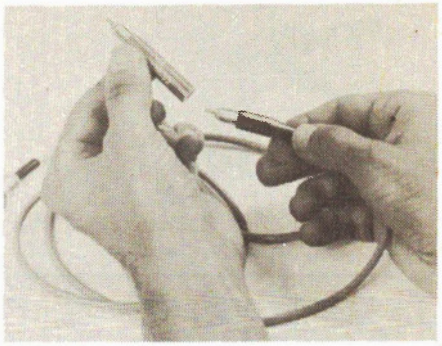

or the basic pointed probe tip with the ground clip assembly.

To change from direct input to X10, the user screws the X10 module directly onto the probe tip, and connects the compensating module at the scope input end of the cable.

Complete information on the new VIZ Model WG-478 scope probe is available from Robert J. Liska, VIZ Test Instruments Group of VIZ Manufacturing Company, 335 E. Price St., Philadelphia, PA 19144, USA. Phone (215) 844-2626.

Component Bending and Cutting Tool

The Lenline Model TP-9 is a simple-to-use hand tool for precise bending and cutting of medium to large size components. Adjustable pointers are easily moved by a thumb wheel ensuring fast accurate setting of required distance between holes. Both cutting and bending operations are carried out simultaneously by lightly squeezing the handles. The length of cut is adjustable, and each side is

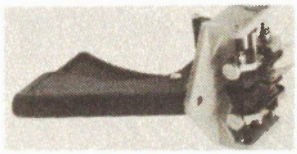

independent of the other. The tool also has a centralising finger for off-setting or centralising the component. A built-in compensator caters for varying diameters of wire.

For further information contact Len Finkler Limited, 25 Toro Road, Downsview, Ontario, M3J 2A6.

Micro Pro Software

MicroPro International Corporation, a newly-formed computer software company have announced their first offerings for microcomputer users: a high-performance IBM-type SORT/MERGE/EXTRACT, 'SUPER-SORT', and a Video Text Editor, 'WORD-MASTER'.

WORD-MASTER provides extensive facilities for text editing based upon "dumb" CRT terminals. In the video edit mode, WORD-MASTER features control key commands which allow bidirectional word tab, line tab and screen tab, left/right word delete and line delete, character/line insert/delete including midline line insert. Additional control key commands provide quadirectional cursor movement and file paging by line or by screen in either direction. High-speed operation is ensured by keystroke buffering and memory buffering of the floppy disk file being edited. In the command mode WORD-MASTER can perform group character-string searches and/or substitutions, merge several floppy diskfiles into the edited file, output edited text sections to additional files on diskette, and move text sections via a queue buffer to new or replicated sections. Looping and conditional matching round out the command set available to the user. WORD-MASTER supports any conventional minimum-type CRT or video board with cursor addressing and clear-screen sequence. WORD-MASTER facilities are particularly suited to high-speed typing and editing applications especially where some pre-canned text is to be used such as in proposals and legal documents.

Both SUPER-SORT and WORD-MASTER are designed to be compatible with CP/M and its derivitives, including CDOS, IMDOS, ADOS, etc. US retail prices are $250 for SUPER-SORT and $150 for WORD-MASTER. Fully supported Dealer and OEM arrangements are available.

MicroPro International Corporation is located at 5810 Commerce Blvd., Rohnert Park, CA. 95903, USA, Telephone: (707) 544-2865.

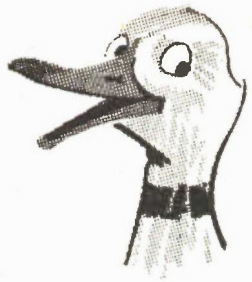

STEREO EQUALIZER

22 controls incl. 2 level. Screened front panel. Aluminum enclosure for assembly into your equipment. Requires 24 VAC at 100 mA for operation.

KIT $166.00 + $4.50 Shipping

WOOD CABINET $13.95 + $3.75 Shipping

CCD PHASER/FLANGER

Without case to allow assembly into your equipment. Requires 24 VAC at 100 mA for operation.

KIT $79.95 + $2.40 Shipping

1979 catalogue 25¢

Similar to ETI Designs

CHARGEX

CHIPS ELECTRONICS

BOX 848 OAKVILLE ONT L6J 5C5

This Is A Mini-Ad!

You Can Write, Draw or Advertise Anything You Like in This Space, for Only

$100

...FOR MORE DETAILS CALL

Sharon

on

416 423 3262

NEWS DIGEST

COSMAC Prommer

A new hardware and software package (CDP18S480) for programming industry-standard PROMs, designed to work with RCA COSMAC Development System CDP18S005, is now available from RCA Solid State Division.

The PROM Programmer Package includes a plug-in module for the CDS II and software containing a versatile operating program. The system will rapidly program Intel 2704, 2708, 2716, 2758, or any equivalent PROMs. The 2704 can be programmed in less than one and one-half minutes.

A further feature of the system is that it facilitates programming of many PROMs from the same source consecutively. In addition, the CDP18S480 can read Intel 1702-type PROMs, thereby providing a means of copying.

Three versions of the PROM Programmer are offered. The disk-based version is designated CDP18S480, the paper-tape version is designated CDP18S480V1, and the magnetic-tape cassette version is designated CDP18S480V2.

In single quantities the RCA PROM Programmer CDP18S480 is priced at $695.00 (US only).

Further information and copies of the PROM Programmer CDP18S480 Product Description (PD22) or the COSMAC Development System II CDP18S005 Product Description (PD16) may be obtained from RCA Solid State Division, Box 3200, Somerville, New Jersey 08876, USA, or by calling Microprocessor Products Marketing (201) 685-6380.

Sol Typing

An electronic typing system has been announced by Processor Technology Corp. It consists of a Sol System III-A, the new WordWizard software package and the new SolPrinter.

The new system combines electronic typing and general purpose data processing (such as general ledger, accounts payable and receivable, payroll and other office functions).

Software for the package was developed by Basic Computer Group Ltd., of Vancouver, who have installed the package at a number of BC legal, accounting, engineering, insurance and publishing firms.

Hardware for the system consists of the Sol computer mainframe with built-in keyboard, a 750,000 Helios II disk memory, a video monitor and a high speed bidirectional daisy-wheel printer.

The WordWizard Software lets the operator edit one document on the screen while the printer puts out another at high speed.

Text can be typed in at high speed since carriage returns are added by software. Automatic justification creates an even right margin, or the text can be left 'ragged right'. Since all formatting is done on the screen, lines of text will be printed exactly as they appear.

For more information, see your local Processor Technology dealer. Dial toll-free (800) 227-1241 for his location. Or write Processor Technology Corporation, 7100 Johnson Drive, Pleasanton, CA 94566, USA.

Audio Today

Developments in audio reviewed by Wally Parsons

THE ANNUAL FAIR has its roots in the mists of antiquity. Originally it was set at the beginning of spring, and generally had strong sexual overtones; the burgeoning of new life, and all that. Early in the first Christian millenium the Church co-opted the Roman spring Bacchanalia, often celebrated in many countries as Mardi Gras, just prior to Lent.

Fall fairs have similar origins, the occasion generally being the celebration of the fall harvest. The Romans also staged a fall Baccanalia, and in addition celebrated the winter solstice with a Saturnalia, named, respectively after Bacchus, the god of wine, and Saturn, ruler of winter, and, in astrology, the sign which the sun enters at the time of the winter solstice.

Generally, such celebrations offer an excuse for drunken orgies among people who need an excuse for a drunken orgy, but they also can serve a useful social function by providing an opportunity for like-minded individuals to get together and display the fruits of their labours over the previous year, to pat each other on the back, exchange knowledge, shoot some blarney, and otherwise put each other on. One modern variation is the convention, which also provides an excuse for a vacation trip denied ordinary mortals, "ordinary mortals" being defined as those not engaged in the profession or industry holding the convention, whether it be the Shriners, or a group of undertakers.

Another variation is the World Fair, now renamed "Expo", courtesy of one, Jean Drapeau, who pulled that one off in 1967, and also managed to make it a celebration of Canada's Centennial. But, in addition, all over the world we have smaller versions of these shows, from the small agricultural fair, to the Canadian National Exhibition, to such an extent that conventions and trade shows now represent a major industry, with large cities vying for convention dollars by blandishing tourist facilities and attractions, and even building convention centres to cater to and attract business.

AUDIO SHOWS

The modern version of Baccanalia touched audio fairly early in its history. My first experience with the phenomenon occurred in the middle fifties with the Audio Shows which appeared annually at Toronto's Prince George Hotel. That venerable edifice has long gone, to be replaced by a super high rise monument to Mammon, a bank tower, I believe. Some of the sound levels to which that poor old building was subjected must have precipitated the demolition work, because even in those days the most common criticism levelled at audio shows was that the sound levels from competing exhibitors were so high that they cancelled each other out in a sea of cacophony.

Those shows may have lacked the slickness of today's but they had a quality of excitement and discovery difficult to describe. On hand were company representatives eager to describe the technology behind their new innovative marvels, representatives who actually knew how the equipment worked, and could carry on an informed and intelligent discussion on the subject, and even had time for those who expressed doubt and disagreement. Especially memorable were the first public display of Tannoy's corner horn; the first binaural receiver made by National, with the first FM interstation muting, plus a vacuum tube output stage which was the forerunner of present day OTL solid state circuits; The Ferranti Ribbon Pickup, complete with elliptical stylus (this was pre-stereo, remember). My Ferranti was never delivered, I recall, because production was very limited, and they were so delicate that most of them were inoperative by the time they crossed the Atlantic, so production was discontinued. Shure demonstrated its first moving magnet pickup at this time, with its own integrated arm, one of the best ever made, and which formed the basis for its Stereo Dynetic line shortly after.

MODERN MARKETING

Over the years the audio show has experienced many ups and downs, but now seems likely to be established as part of modern marketing, for better or worse.

Prior to this year the last audio show I attended was about three years ago, on one of the early days reserved for dealers and the press. The decibel level was on the civilized side, but my whole impression at the time was one of boredom and frustration, which I had an opportunity to express in an interview with a trade publication at the time. So many developments, and yet so much "me-too" product; so many "breakthroughs" and so little that was truly new; so many button-down minds with wide lapels and knitted ties, but so little dissemination of information.

A lot of people seem to have gotten the same message, because the promoters found it advisable to get out of the business due to lack of exhibitor response. Finally, in 1978, a new promoter picked up the idea again, first with an audio trade show,

and then a consumer audio show. Response was so good, I'm told, that exhibitors have already signed up for next year. So along comes professor Cassandra here with a big wet blanket. Why?

My first impression upon entering the Constellation Hotel where the consumer show was held was "Boom Boom Boom", and Loud Loud Loud: The theme of the show, then, was "Loud is Beautiful, as long as it's boomy and distorted". Moreover, much of this tenor seemed to be reflected in the patrons of the show. Perhaps the worst aspect of the show resulted from the policy of inviting retail dealers to take part. As a result, there was a tendency to go for the visitor's money than his mind. I remember particularly one fellow, new to the Toronto stereo scene who has been promoting a U.S. line of speakers alleged to have been the hit of the Chicago show. Well, the most noticeable characteristic of these wonders was the loud boom produced in a continuous demonstration controlled by a fellow who seemed to have trouble figuring out how to operate his amplifier and cassette player. Conversation was impossible so he would promise to meet in the hall, but never showed up because either he forgot, or got sidetracked by someone who wanted to dicker price on one of the specials featured in the showroom, or inspecting the shopping bag of someone whom he was convinced had stolen a pickup (he didn't find anything). This was an example of the person who doesn't keep appointments because, he admits, he only keeps one appointment out of every five made.

THE YAHOOS MOVE IN

This is a pretty extreme case, of course, but it illustrates the kind of person who is more and more achieving a high profile in the retail audio business. It illustrates a strong move away from professionalism to hucksterism which has become more and more evident over the past few years. About the only thing missing is the loud checkered sports jacket and the hand painted tie.

But the worst aspect of the show, carried over from the past efforts, was the abysmal ignorance of matters audio, and, indeed, even ignorance of the manufacturer's own product. This was even true of the genuinely good equipment properly demonstrated. For example, the dealer demonstrating the OHM Model F is a well known audio journalist, and frequently appears on open line radio talking about audio, yet critical questioning about the product resulted in a brushoff. Why? Well, one reason may have been the presence of potential customers and the guy was anxious to make a buck. Frankly, I think that this speaker could have sounded much better. Back in the old Prince George days the subject would have been discussed; today, anyone who asks questions is dismissed as a troublemaker.

Some high points, though. The 3a company of France, the font of Metric measurement, used a separate room from their regular display for demonstrating their Tri-phonic system. As a result it was possible to set the system up properly, and an impressive system it proved to be, too. They even played some music. The staff on hand was more knowledgeable than most, although I still haven't received the technical literature promised me.

Likewise, H Roy Gray had a well thought out set-up of the Infinity Quantum Reference Source loudspeakers, through which I was able to hear some Wagner on request.

But first prize for forthrightness must go to Cerwin-Vega. They demonstrated quite convincingly that their speakers are indeed capable of high sound levels cleanly. No further claims are made. Their people acknowledge that their product is not state of the art, involves no great break-throughs, do not deliver the ultimate in sonic realism, but infact can be listened to for long periods of time at high levels without listener fatigue.

But for most of the others, a pox on the lot of you. Next time please staff the exhibits with knowledgeable people who know what they are doing, and throw out the retailers.

You see, the real reason for the poor response to previous shows is the lack of professionalism.

I REALIZE, OF COURSE, THAT WE MUST DO A LITTLE MORE WORK ON THE MINIATURIZATION ASPECT BEFORE WE MARKET OUR WRISTWATCH/ TELEVISION.

Audio Today Letters

If you want to express your views or report on news write to Audio Today, ETI Magazine, Unit Six, 25 Overlea Blvd, Toronto. Ont. M4H 1B1.

T-LINES

I have read with much interest your comments in recent issues of ETI regarding transmission line speakers and note that you would consider giving advice to would-be speaker builders.

I have built speakers (RSC WR 10's) in the past from manufacturers' specifications and have been pleased with the results.

I have little knowledge regarding enclosure design, but wish to construct two speakers of better quality than the WR10's without passing my budget.

From your remarks it seems that transmission line design is really the best, and as I am an able cabinet maker, also seems to be the type I would construct.

What is the principle of transmission line design? I understand Acoustic Suspension and Bass Reflex, but not transmission line.

A.F.C. Niagara-on-the-Lake, Ont.

I do not necessarily regard the transmission line as the best, but it is my own favourite method of loading. The trade-offs of cost, size, efficiency, frequency response, transient characteristics are too varied to allow for one "best". I still have several air suspension types, bass reflexes, and rear loaded horns in use in different rooms.

The transmission line is so named because of its electrical analogue: when such a line is terminated with its characteristic impedance, all energy put into the line is delivered to the load, and no signal is reflected up the line. An acoustic line derives from the tuned pipe, which is said to be properly matched to its driver when the length of the line at the driver's resonance is one-quarter wave-length. Such a pipe is a resonant column, and at one-quarter wave-length the emerging wave is reflected up the pipe and returned to the driver diaphram out of phase. If the pipe is filled with acoustically resistive material sound is slowed down, effectively increasing the line length and absorbing sound reflected above the tuned frequency. Although theoretically the line can be effectively infinite, in practice we settle for something less than this. The cross-sectional area of the line must at least equal the area of the diaphragm. The driver chosen should be one appropriate for a very large infinite baffle. Thus, most air suspension types are unsuitable because either the moving mass is excessive, or the magnet inadequate. Generally speaking, we should look for moderately low mass, moderately high compliance, and large magnet. Incidentally, transmission lines are affected by sub-sonic excitation, so should be used with electronics incorporating sub-sonic filtering.

MORE T-LINES

I am writing with regard to the possibility of constructing my own full size transmission line enclosure using either Philips AD 12100/W8 or RSC Classic 12" woofers. This kind of enclosure was mentioned in both July and August issues of ETI.

What I am interested in are the possible design considerations for making my own or a "tried and true" design already in use somewhere, using one of the above two drivers.

In the "letters" section of the August issue was a letter along the same lines as mine. I am familiar with most of the publications mentioned in the answer. In addition I understand how transmission lines work, but have none of the formulae needed for design such as with bass-reflex. Can you help me?

R.M., Pinawa, Man.

Much of the reply to the previous letter applies to yours. To my knowledge, no one has done work in transmission lines comparable to that of A.N. Thiele with respect to vented enclosures. However, a few points which might help you: If the line is papered throughout its length, there will be fewer problems with standing waves within the structure. A 12" driver has an effective radiating area of 78 sq. In. My own speaker uses a taper rate of 1.414. Thus, the line at its largest is 110 sq. in. The loading chamber immediately behind the driver is about 250 sq. in. The depth behind it is about 18 inches which is appropriate for the AD 12100 used as an air suspension.

Jensen Triaxial® 3-way Speakers

Quite simply, the most advanced car stereo speaker ever.

For the best sound ever in your car. The first car stereo speaker with a woofer, a tweeter *and* a midrange.

Identical in principle to the best home stereo speakers. Jensen's midrange picks up a whole range of tones lost to any other car speaker.

Write today for Free catalogues and the name of your nearest Jensen Dealer —

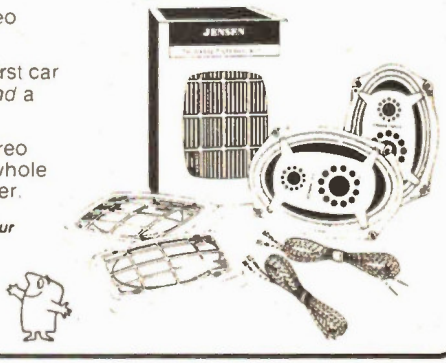

len finkler ltd
25 Toro Road, Downsview, Ontario M3J 2A6
Telephone (416) 630-9103 Telex 065-24010

This tapers rapidly into the line, and is loosly filled with fibreglass. Fibreglass is loosly hung through the length of the line and its effective length is increased by a factor of 1.414. One-quarter wave length at 20 Hz is 13.6 feet which, when multiplied by the reciprocal of 1.414 (0.707) yields a physical length of 9.6 feet.

I should say at this point that I am presently involved with a company in preparing a moderately sized version of this speaker for commercial manufacture in the new year. One of the unique features of my speaker is the method of terminating the line which, for the moment, has to remain a proprietary secret, as well as details of the driver which I've designed for it. However, there is no real departure from the principles outlined. Panels should be braced, and I like to damp them using automotive undercoating. The stuff stinks for about a week, but results in a non-reasonant panel.

HALL EFFECT HEADS

I am really not very well informed about electronics, and I have to take a lot on faith rather than understanding. However, I read most of the non-technical publications just to find out what is happening next. I am tired of reading all the hype that is printed in the guise of "critical reviews" of audio systems and products. After reading your column, it is refreshing to find that there are still iconoclasts among us. Please keep up the sharp-eyed observations. They are more welcome than you will ever realize.

A little over a year ago, I read in one of the pop sci type magazines that one of the Japanese companies was planning to produce a single gap recording head that was based on the Hall effect. By replacing one gap with semi-conductor material it apparently improved the recording level to where they said cassette recordings would be at the level of better quality reel-to-reel.

One feature I do remember, a single winding around both sides of the head replacing separate windings about each pole. It will apparently produce a signal even when the tape is standing still. Is there any chance that this is where Tandberg's tape head driver circuit is going? Or is that just the standard schematic for a tape head and I have just stuffed my typewriter down my throat?

A.F., Victoria B.C.

When I started this column last year I felt that we needed to have a few sacred cows challenged, and hoped that readers would agree. And as long as I get letters from people like you, I will know how welcome such observations are. Many thanks.

The Hall Effect head you described has been dangled in front of our noses for years, like flat screen television. An even earlier version incorporated a vacuum-tube in which the magnetic flux directly controlled cathode-plate current, but nothing ever came of it. Probably the difficulty lies in the fact that the real limitation in cassette tape lies not in the record or playback head, but in the tape itself, principally the self-demagnetization of opposite poles placed close together at low speed on the tape oxide. The main reason I cannot get too enthusiastic about the Tandberg circuit is that I don't see it as a big deal getting high output levels from a transistor, at least the levels required to drive a recording head. Indeed, my criticism was not of the circuit itself, but of the ballyhoo. In any case, playback heads present more problems than record heads, and combination or dual purpose heads are the toughest because of the conflicting requirements. In essence, the problem is not in recording the signal on the tape, but in keeping it there after it leaves the recording gap.

As for the schematic, yes, shall I send you some Tums?

To those readers to whom I still owe a reply, please be patient and hang in there; a combination of mail strikes and moving has made life complicated. But, never fear, you have not been forgotten.

NIPPER

Good news for fellow fans of Nipper the wonder dog: RCA has finally seen the error of its ways and will now bring back this fine old trade mark. They've even erected a large statue of Nipper atop their head office. Seems they got tired of all the letters threatening to set the SPCA on them. Congratulations and thank you, RCA, for caring.

Don't Miss...

NEXT MONTH IN ETI

Phasemeter:
Why and how to measure phase angles of voltage current or power, from sub-audio to beyond 100kHz.

Short Wave Receiver:
Simple straightforward short wave radio set covers 5.5 MHz to 25 MHz. Uses one dual-gate MOSFET plus one ordinary transistor to effect this regenerative design.

Light Chaser:
Electronic unit controls three strings of lights to form rotating moving display as seen on Cinema marquees.

Space Shuttle:
How it works and what's inside.

Comment:
A comment from Motorola's Vice President and General Manager of the Semiconductor Group on what the microprocessor has done to the overall components scene.

. . . And of course much much more . . . . . .

eti PANEL TRANSFERS

A really high quality system for finishing off your projects. The sheets include a mass of lettering and control scales for both rotary and linear pots.

The lettering is transferred simply by laying on to the panel and rubbing down — it's strong and permanent.

The markings are on two sheets (a full-sized one cut in half for easy postage) and contain sufficient lettering for dozens of projects.

Send $3.50 (including postage) to ETI PANEL TRANSFERS. Unit Six, 25 Overlea Blvd., Toronto, Ontario, M4H 1B1. Ontario Residents add PST.

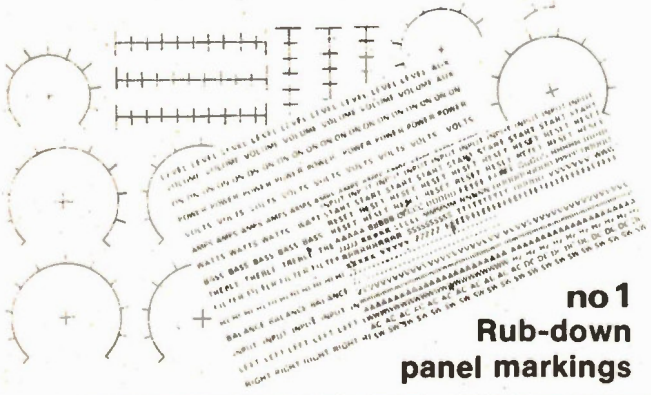

no 1 Rub-down panel markings

Accuracy made easy . . . Push Button Triggered Scopes from

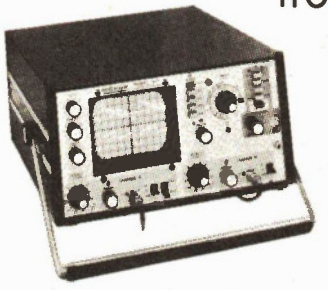

HICKOK
the value innovator

Model 517
Dual-Trace
15 MHz
Triggered
Oscilloscope

A value loaded medium bandwidth scope useable to 27 MHz
The Hickok Model 517 Dual Trace Oscilloscope is the perfect signal tracing instrument for all servicing jobs. The Model 517 has all the necessary features for professional analysis and results.
Dual trace lets you simultaneously view two waveforms that are frequency or phase related or that have a common sync voltage.

This unit is also available in single trace Model 515 and Model 532 30 MHz Dual trace.

ROGERS electronic instruments ltd.

P.O. Box 310, 595 Mackenzie Avenue Units 1 & 2.
Ajax, Ontario L1S 3C5. Tel. (416) 683-4211

Robots: Some Facts

Dr. Peter Sydenham, ETI Special Correspondent presents the factual side of Robots and analyses the many separate factors neeeded in all Robots.

ROBOT DEVELOPMENT from the Middle Ages onward is simultaneous with the rise of man's ability to devise and build complex mechanical machines, which grew once men realised that considerably more advancement was possible by employing experiment with theory. (The result of such men as Roger Bacon of the 13th century.)

The bulk of mechanical ingenuity and skill was expressed in clock-making of great sophistication. The very famous 1354 Strasbourg clock depicted the St. Peter denial of Jesus, a main feature being a cock that moved, stretched and crowed.

These skills were occasionally employed to make devices other than clocks. Jacques de Vaucanson, around 1750, constructed a well-documented duck automation toy. It stretched, took grain from the hand, swallowed and seemingly digested its food, leaving deposits behind. It consisted of hundreds of moving parts.

Robot development also has its beginnings in the form of calculating machines, such as the Pascal and Leibnitz instruments of the 17th century, and the later Babbage engines of the 19th century which included stored program and digital number processing.

We tend to think of the Babbage calculating engines as complete in what is exhibited today in the London Science Museum. In reality, however, they required an energy source of several kilowatts to drive them. A small steam-engine was to have been used by Babbage.

The first electrical digital computer, by Zuse in the late 1930s, used relays to perform logic. The first valve installation was in the middle 40s and it was much too large in size and too small in capacity to provide brain-power for a mobile robot device. Today things are much more favourable. We return to the feasible robots of near modern times at the end.

WHAT FORMS A ROBOT?

In the first half of the 17th century Descartes suggested that the physiological animal can be thought of as no more than a vastly complex machine. Intolerance of ideas, especially those that had religious implications, was extreme in those times and no doubt Descartes only spoke and wrote a little of his concept. Pascal, for example, was dangerously close to being the subject of a witch hunt after people saw his simple (to us!) add-and-subtract calculator — after all, it could do the tasks attributed then to a god.

The idea that animals are merely machines is known as the reductionist or mechanistic philosophy. As we cannot prove, by any means whatsoever, that there is more to man than man can ultimately devise, we cannot, at present, resolve the issue. Nevertheless, there is much about animal systems that is reducible to plain engineering. It is these known facts that suggest that many jobs that were considered as man-suitable in the past could well be done by machines instead. The justification is, to use a well-known quotation, "to make human use of human beings". If an automaton can do the same tediously repetitive task as is done now by a bored and dehumanised human operator, then there is a case to make use of it. This is the story of man's industrialisation, especially since the 18th century.

The human animal is a fine example of a general-purpose, mobile, self-repairing, self-reproducing machine, one that can adapt to new tasks and new environments as need arises. It is not perfect for all jobs, but does provide a fine basis for modelling robots of work, even though the materials and strategies used are different in practice.

Animals can be thought of as hardware systems, consisting of several kinds of sub-systems put together to form the whole system. The complete system is capable of many modes of behaviour. A diagrammatic representation is given in Fig. 2. Let us look at the building blocks first.

Fig. 1. Clocks, like this one made in 1512 in Munster, Germany, incorporated great mechanical craft. They provided need for mechanical skills used in robot devices.

Structural framework — This is the mechanical part holding everything together. Bones, skin, tissues in the animal can be equated to metal, wood or plastic frames of machines. The framework is developed to satisfy, as a compromise, requirements of lightness, rigidity, appropriate articulation, protection for vital parts, and correct location of one part with respect to another. Note that robot machines do not use the same materials that are found in animal systems. To date it has been more profitable to use quite different substances because man knows too little about the production of regenerative, self-repairing materials used by nature.

Actuators — On to the frames are added converters that change the available energy form into mechanical work. On animals these are the muscles; on robots they are usually electric, hydraulic or pneumatic motors. Again, although muscle-like devices have been made, robot actuators use different principles of conversion and different energy sources from animals. Actuators cause limbs to move, hands to hold, and the whole to translate where needed.

Sensors — Automata that, for instance, play music, are preprogrammed. Regardless of external influences, once set going, they will attempt to keep playing despite changes to their environment. Robots can be much more sophisticated for they possess sensors, or receptors, that observe what is happening around and to the robot. Sensors provide signals that, after data processing, tell the actuators how and when to work in a way that modifies an otherwise hardwired kind of performance.

It seems that many animal senses work on the basis of having a multitude of on-off digital sensors built into each sensing device, the combined, parallel, signal output being a measure of a sensor signal strength. Robot sensors rarely work this way for we are unable to handle so many parallel channels as nature uses. Robots usually incorporate analogue output sensors — the so-called linear signal in integrated circuit jargon. To detect the seat of a fire, an automatic robot fire extinguisher will use a proportional signal infra-red detector homing the robot towards the position of maximum signal output. In some cases man-made robots do use digital output sensors but not so commonly as analogue ones. An example might be a digital shaft encoder sensor mounted to measure an arm's angular position.

We cannot measure every variable that arises in the material world. Even so, literally thousands upon thousands of sensors have been devised so the robot designer of modern times can go a long way with what exists already, especially if one sticks to industrially marketed units in order to keep costs low.

Data Processing Centre — Signals from sensors are routed to DP centres. The brain is the central unit of humans. Not all animals have only one brain. Some early prehistoric animals are believed to have had two brain centres. Signal pre-processing goes on in animals before a stimulus reaches the brain. This can also be the case in robots. Robots can have local brain-power plus a central unit. We cannot make much of a comparison between DP of robots and animals, for we still have only a meagre idea of how the physiological brain operates. Insight that we do have is enough to say that robot brains will be quite different in physical structure from animal brains. We tend to opt for non-redundant data processing methods using a limited number of binary locations. The brain appears to make use of massive redundancy and enormous bit storage capaciy (10^{20} is an estimate).

TERMS

Robot — In Gothic it is akin to a word meaning "inheritance", in German to "work". An old Slavic word that is equivalent is "rabota" and in Czech and Polish "robota" means servitude or forced labour. Professor George's book (see list) says it is "a machine devised to function in place of a living agent".

Robotics — Gaining rapid acceptance, this term describes the discipline that designs and creates robot device structures and sub-assemblies. The following word is reserved for its system organisation.

Cybernetics — Study of multiple feedback loop, self-governing systems, usually of great complexity, as are found in living organisms and advanced man-made control systems.

Automation — Any device that has apparently spontaneous action. (Plural is Automata.)

Humanoid — Robot form of man.

Android — Automaton of man-like form.

Homunculus — Inferior robot form of man.

Prosthesis — Man-made, human body replacement parts.

Ecoskeleton — Robot frame that fits around human to give power to limbs.

Golem — Man-made creature not having man-like form.

Mobile — Robot device having mobility.

Manipulator — Handling device.

Telechiric — Derived from Greek for "distant hand".

Communication Links — Sensors feed signals to actuators via DP centres. The links we know and use in automatic machines are electric wires, optical fibres, air and oil tubes. Nature, however, uses the nerve links in which pulse signals are regenerated in mysterious ways by electrochemical methods. We can make use of Nature's concepts but not her hardware methods.

Energy Supply — Animals derive energy converting foodstuffs into energy by chemical means in muscular tissue. Robots cannot do it this way, but make use of the sources known to man at this time. Electricity can be generated by converting fuel to electric current. In mobiles a usual source of energy is electricity from storage cells. Restricted mobility and fixed robots can obtain power by an umbilical supply cable. Hydraulic and pneumatic systems derive energy from their compressor unit — the lines act as energy transmission links to the converter unit.

Robots that perform work will be somewhat inefficient for all energy systems will have losses. The human system consumes around 100W at a rest condition (of which most is lost as heat) and can provide about three times this power as work for limited periods. This would, by implication, suggest that a robot doing the full tasks of a man needs a 400W supply capability.

The man machine looks quite puny: 400W is not exactly powerful. Robots are not so limited: For a start, a man begins to tire after a few hours at 200W output — a machine equivalent can go on tirelessly. Robot manipulators can provide whatever power level is desired. They are made to lift huge loads. An example is a framework that a man fits into, giving him arms that follow his own with greatly increased load capability.

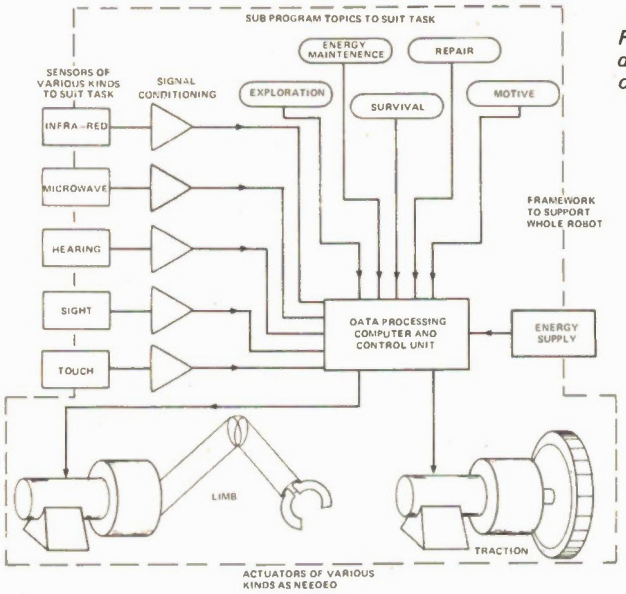

Fig. 2. Robot systems are made up from sensors, actuators, and data processing power operating together to satisfy a number of operational modes.

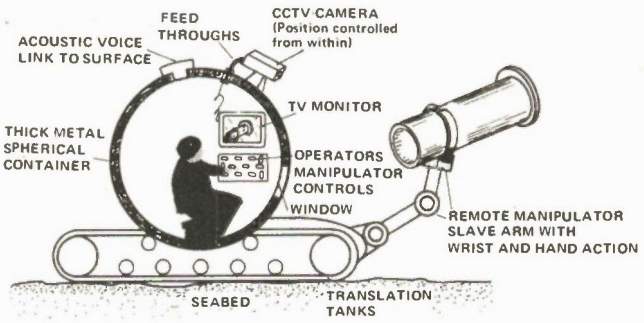

Fig. 3. Underwater a robot manipualtor provides an operator with an effective ecoskin and increased ability to do work.

Motivational Mode — In-built must be some means that ensures that the robot constantly goes about the business for which it was created. This mode is temporarily given lower priority when circumstances dictate. As a simple example, a mobile designed to cut the grass of a lawn may need to divert its attention from grass cutting toward a battery recharge. After charge it must return to its duty.

Survival Mode — The programming basics must incorporate means to put the robot into behaviour modes that reduce and, hopefully, eliminate damage to the robot. The lawn cutter above must recognise that the concrete edging or stray stone must not be brought into contact with its blades. The survival mode must also extend to preventing the robot doing damage to its environment.

Energy Maintenance Mode — As well as the obvious need for the robot to ensure that it has power enough available for instantaneous load, it should also be able to prepare an energy budget of near future need. If it is a battery-fed mobile, it may well find itself out of energy enough to get back to the recharge point.

Exploratory Mode — Robots can have greater than one purpose. Such purposes may not exist all of the time and all in one place. When no purposeful sensor signals are received, actuators should be set by a sub-programme to cause the robot to go and look for a task. In animals this is seen as inquisitiveness. Without it humans are referred to as lazy and unmotivated, as would appear a robot.

Maintenance and Self-repair — The good robot is one that does not deteriorate in performance. This is not a reality, however, for although wear rates of mechanical implements can be reduced by better design and more expenditure, it usually can only be done at greatly increased cost. It is to be expected that robots, at least for many years yet, will require maintenance like greasing, bearing replacement and sliding surface repair.

The first thing the robot will need to do in this mode is to diagnose its own troubles, deciding what repair action is to be taken. Then it must organise some way to replace parts. This mode is probably more idealistic than real for most robots at present, but the software programmer and robot designer should, at least, give some consideration to this need.

ROBOTS AND PEOPLE

In 1942 Isaac Asimov put into words three laws of robotics that have become famous in this field. They refer to the relationship between robots and people that designers should bear in mind for obvious reasons. The laws are:

(1) A robot may not injure a human being or, through inaction, allow a human being to come to harm.

(2) A robot must obey the orders given it by human beings except where such orders would conflict with the First Law.

(3) A robot must protect its own existence as long as such protection does not conflict with the First and Second Laws.

Asimov never intended the laws to be the one and only guide to robot designers — far from it, they were the result of science-fiction writing. They are not foolproof and do not extend to all situations, but do remind us of some basic ideals to consider in programming a robot's behaviour pattern.

PROGRAMMING THE ROBOT

A fully determined robot performance, that is, one that will obey instructions that are all preset before it begins to work, is little better than a special-purpose machine. It cannot do other than what is expected by its programmer. This basic level of performance is required of many robots, but is not the complete capability. It might be preset by a punched-tape or magnetic tape in the same way as many domestic knitting machines work. Most manipulator robots get these instructions via an initial man-operated run using special controls that allow the operator to run the manipulator through the required manipulative routine. Once done it becomes a stored programme routine.

Far better, if possible, is to servo the output required according to inputs of error. For example, to put a pin in a hole is better done by viewing the error between the pin and hole reducing the error to zero rather than presetting an arm to put a pin where the hole is expected to be.

The latter open-loop method assumes that all relative positions of limbs of the robot are held within the final tolerances needed to put the pin into the hole — which

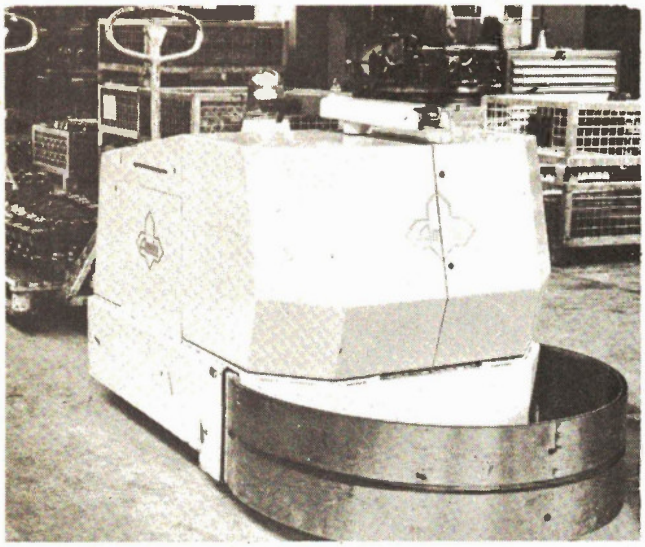

Fig. 4. The Ameise Teletrak driverless tractor train guides itself to follow a guide-wire set into the floor. One day it may be economic to provide the robot with navigational ability that compares with that of humans.

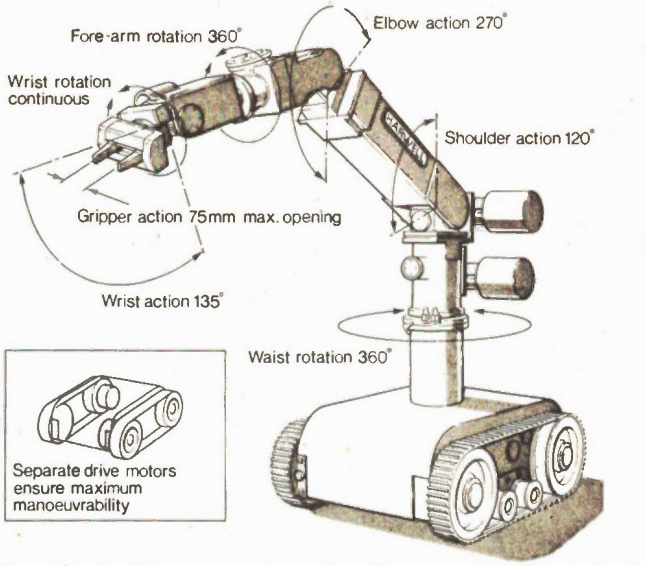

Fig 5. ROMAN, a recent Hartwell mobile, is made for use in hazardous industrial situations. It is electrically powered using cable control.

are extremely tight limits in many cases. The former method makes use of feedback and it is a feature of servo systems that actuation components inside the loop can be reasonably inferior in quality. This is a most important system concept — think of the problem of finding a place on a map by dead reckoning from a set of distances and bearings, as opposed to improving one's situation as you go by recognition of error still existing.

RECENT ROBOTS

Many authors on robotics include mention of a wide variety of inter-disciplinary automatic devices. This broadens the subject enormously and is a quite reasonable thing to do for robots can take any form. For reasons of space, we restrict ourselves here to mobiles and manipulators.

It is said that the term "robot" gained public acceptance as the result of a 1923 play by Karel Capek. It was at that time in history that ideas about automation began to flourish in earnest because of the favourable technological atmosphere. Electronic amplification was just available, mass production of consumer goods was established, sophisticated industrial control was emergent at a seat-of-the-pants level (theoretical considerations came later in the late 1940s).

Electrical computation began in the late 1930s, resulting in the first working vacuum tube system in the 1940s. Computer research no doubt stimulated interest in artificial intelligence, AI for short. Things were really happening by the 1950s. Studies of adaptive control, self-organising systems, AI and a new discipline called cybernetics were developing rapidly — research workers became very optimistic that machines would soon be able to design better machines. But they found over the successive years that it was not so easy!

Cybernetics was the term popularised by Norbert Wiener in 1957 for the discipline covering self-governing systems of all kind, seeing them basically as all the same thing, regardless of application. The term is derived from the Greek language and means the art of steersmanship. It is of interest to include the fact that Ampere had previously used the term to describe the science of government.

Theory of automata became an established pursuit a little later. Pattern recognition was another related area that became fashionable to work on. By the early 1970s the realisation that these ideas would not blossom so quickly, if ever, to give regenerative machines and robots replacing men in all their faculties, was accepted. Such goals are now seen to be much further away.

Today the past efforts of many people in the above fields have been tidied up, extended, ignored and much has been weeded out as irrelevant or false, leaving today's robot designers with a very useful and full theoretical and practical background to work from.

Mechanical design aspects of robots have advanced through work in prosthesis, in nuclear materials handling, in a relatively few academic engineering departments and within a small number of industrial groups.

Data processing for robotics concentrated on seeing what could be learnt from biological systems — maybe this was not so fruitful considering that designers have to work with different materials than nature uses. Then came the mini computer, almost small enough to build into a reasonable size robot device. Costs at first were prohibitive. Computing power and speed were very limited for operating robots at the motional speeds and precisions needed. Today we now have the quite cheap microprocessor, where the larger part of its sale price is for the market promotion, mechanical packaging and application notes.

BEFORE TIME

Advanced ideas usually meet opposition in a society. Bruno was burnt at the stake in the 1500s for suggesting astronomical theory was wrong. Pascal nearly went the same way for making his adding machine. Even Ohm had his simple law of the 1830s opposed by men of learning. The road car was held up in development for over 60 years by the need to walk in front of a vehicle with a red flag. Fear, preservation of the status quo, misplaced motives, politics and the natural and more healthy need for cautious acceptance usually emerge before a new concept finds acceptance.

So it has been with robots. Science fiction writers paint both gloomy and happy scenarios with robots. We tend to remember only the former. Robots are merely

►

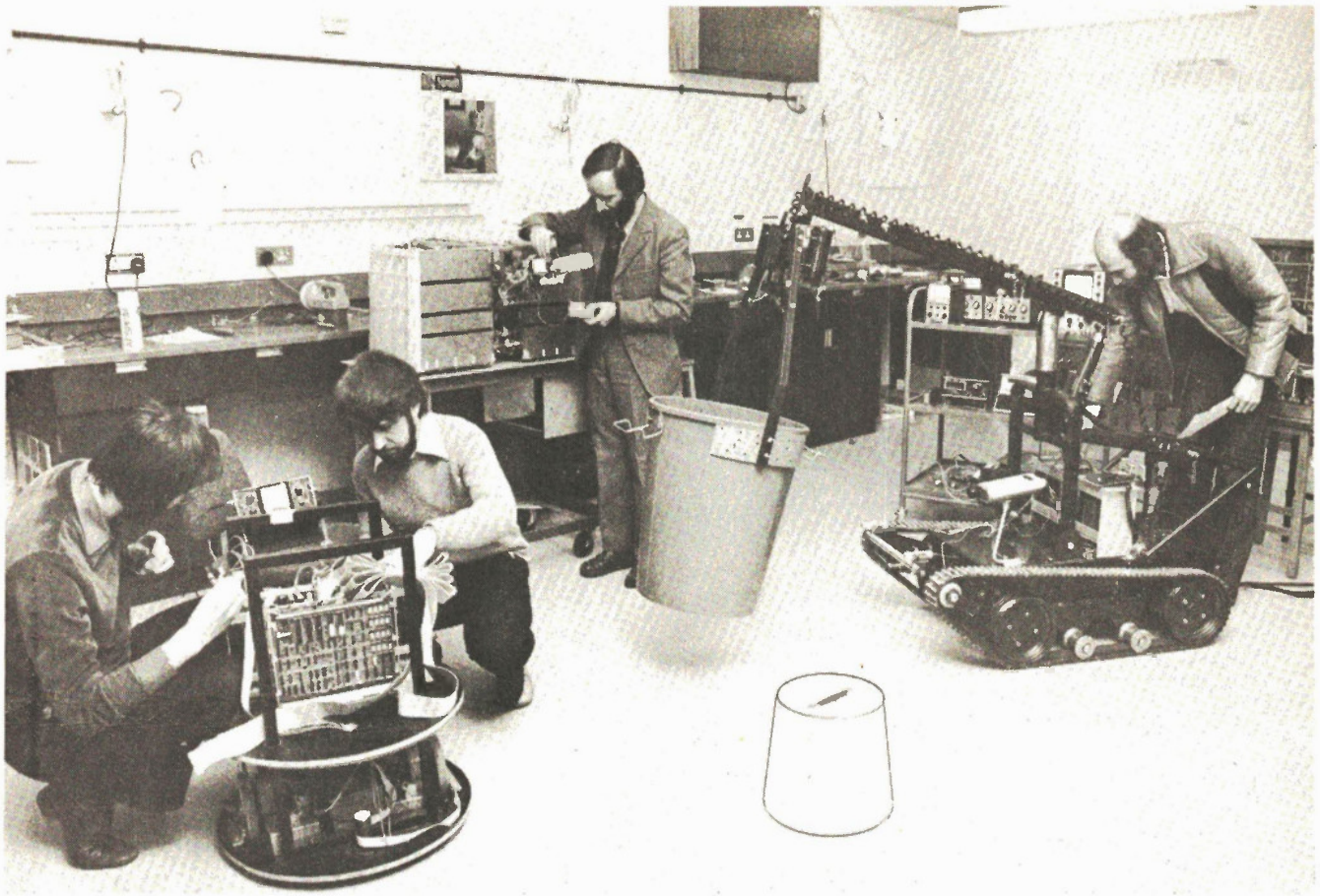

Fig. 6. Four projects of the Warwick University Robot Laboratory. That on the left uses an inboard microprocessor. At the rear is a hand like short arm manipulator. The tracked vehicle was originally sold as an army bomb disposal unit, it acts as a ready made vehicle to conduct research upon. (Keystone Press Agency).

machines of greater capability and versatility than man has made to date. As with all of man's technology, he has to learn to use them appropriately. We should not fear the robot but look deeply into its value to us.

Returning to earth from the levels of philosophy, it is quite certain that the robots we build over the next decade will not challenge our existence. We know too little at this time to build them with such powers. There are, however, numerous requirements where robot devices can replace men performing tasks too hazardous for men to do. Machines are the extension of man on earth and no force is likely to stop man's use of tools which has been part of his culture from the very beginning.

UNIVERSITY RESEARCH

Robots of the future will make use of techniques discovered and developed in research groups working on artificial intelligence, robotics, computing science, electronics, plus many more areas.

The main laboratory of the Robot group at Warwick University is shown in Fig 6. In the same room is the computer terminal to which the four projects shown are hooked-up to give them significant data processing ability. Around the walls are placed acoustic transducers used in positioning work.

A group at Edinburgh University work on putting artificial intelligence into robot devices. They have built a servo-controlled, computer-based, handling system.

A prime purpose of University research is to seek better ways to achieve goals. Theirs is not really a task of building devices that are totally engineered. For this reason one seldom sees a finished robot but more units in stages of change.

Never before has the field of robotics been so ready for development. Simple robots with quite sophisticated brainpower are in the price range of the non-professional. Amateurs can now enter the field knowing that the capability of their effort made now will be improved as efficient and powerful strategies are transferred to the general public domain at low cost via mass-produced integrated circuitry and software packages. A good comparison is seen by remembering that visual display units that write words were wonders of the time ten years ago. Now the equipment is reasonably standardized, far more advanced and within the price range and building capabilities of many teenagers.

ORGANISATIONS

British Robot Association

Secretary, Dr. M. Larcombe, Robot Laboratory, Department of Computer Science, University of Warwick, Coventry, U.K. (A professional body with leading manufacturing companies as members.)

Robot Institute of America

20501 Ford Road, Dearborn, Michigan 48128, U.S.A. (This professional U.S. body has recently inaugurated a medal — the RIA Joseph G. Engleberger Award — for individual outstanding contributions to the science and practice of robotics.)

The communications revolution has a message for you... there's opportunity for the NRI-trained technician.

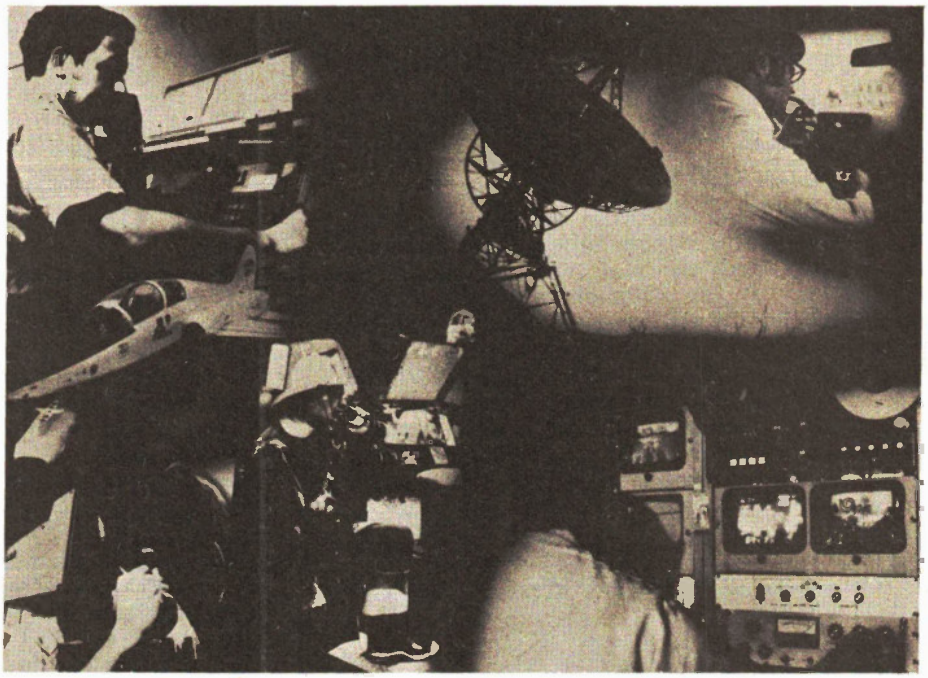

From Police Radio to CB... Microwave to Marine Radio... AM/FM to TV Broadcasting, Skilled Maintenance and Repair Specialists Earn the Top Dollar.

The incredible electronic age continues to grow by leaps and bounds as business, government, and public services expand communications networks. Private citizens by the millions are getting in the act with CBs, scanners, and amateur radio equipment. Every radio station has mobile and fixed equipment to maintain, and TV stations are adding minicams and microwave relays to their already-sophisticated systems.

You Can Learn a New Career at Home

You can get in on the action by taking NRI's Complete Communications Electronics course at home in your spare time. No previous experience is necessary...NRI starts you with the basics and, using a combination of easy-to-understand "bite-size" lessons and exclusive "hands-on" training, gives you both the theory and practical experience you need to get ahead fast.

Build and Keep 2-Meter Digitally Synthesized VHF Transceiver

You get actual bench training as you build NRI's industrial quality two-way radio. And you build key servicing instruments like a CMOS frequency counter and TVOM meter that you'll use both for learning and earning.

63 Years and a Million Students Worth of Experience

Since our founding in 1914, over a million students have chosen NRI technical training as the way to get ahead, the way to increased income and big opportunities. You owe it to yourself to see if this new and exciting field holds *your* future.

Free Catalog... No Salesman Will Call

Send today for the free 100-page NRI catalog describing all 48 lessons and 10 special kits you get with your training. And learn about other careers as a CB Specialist, TV/Audio Serviceman, and Digital Computer Electronics. Listen to the message.

If card has been removed, write to:

NRI McGraw-Hill

NRI Schools
McGraw-Hill Continuing Education Center
330 Progress Avenue
Scarborough, Ontario M1P 2Z5

Robots: Brain Power

Dr. Mike Larcombe investigates the logic that makes a Robot think it thinks!

ROBOTS DO NOT HAVE BRAINS. 'Wet logic' technology — brains to you — is many orders more complex than the world's most complex machine (which is probably the International Telephone system, not any supercomputer). Robots are however extremely bright — for machines. They are much smarter than computers — which suffer from the so-called GIGO syndrome (Garbage In, Garbage Out). Unlike the dumb computer they answer back — ask a smart robot to walk through the wall and you will get the robot equivalent of a flea in the ear. Give them a reasonable task and they will carry it out — give an impossible task and they will either a) refuse to do it, b) try to do it for a while and then give up, c) have a seizure (badly designed robots only — as we do not yet really know what makes a good design, this means most of them).

THROUGH A ROBOT'S EYES. . .

It is easy to be patronising while watching a robot at work — especially as their vision is either poor or non-existent. A few minutes attempting to perform the same task using the same robot body under remote control and using the robot's own sensors soon convinces the human that the robot itself is best qualified to control its body. Without direct visual feedback remote control becomes exceedingly difficult — when dealing with feedback from non-human sensors such as sonar or doppler radar, virtually impossible. In its own sensory environment the robot is a master of control. Where robots use sonar their behaviour in the dark is much superior to that of their designers.

No undisclosed miracle of technology lies hidden within the robot's carapace — no 'positronic brain' is required. Most of the more advanced robots contain — or are controlled by — computer, and frequently by multiple computers. With the advent of reasonably powerful micro-computers with 16 bits or more to chew the computer power can now be contained within the robot body. The smaller 8-bit micro-processors tend to wheeze and groan under the processing load required for even a small robot. The really high IQ robots still tend to cling to the apron strings of a big computer but it is only a matter of five years or so before they can cut loose.

Now if you had been paying attention you would have noticed that in the first paragraph I was somewhat disparaging about computers. Yet computers control robots — how come the robot is smarter? Well the robot is a lot more than just computer — it has sensors and actuators and perhaps a boxful of specialist processing functions such as motor acceleration-deceleration control or positional servo systems. A small robot will have more input-output channels than many of the larger time-sharing computers. The robot's necessary data handling load may well exceed 10 Megabits/second — much too fast for a micro-processor by itself. Fortunately much of this load is trivial — such as limit switch logic — and is easily handled by special logic, but nevertheless it must be handled. The road to automatic control is littered with sad and pathetic figures who thought all they had to do was connect the wires into a computer and it would do it all, 10 Megabits/second requires a great deal of computer and a great deal of money!

FLEXIBILITY

A robot program is unlike an ordinary computer program such as a payroll program. A payroll program is a set of sequential steps moving data, making decisions and ultimately stopping. A robot program is attempting to weigh up a continuously changing 'situation' and assess what to do in that situation — much as an analog computer is continuously monitoring both its inputs and its internal state. It is no good having a robot which does not realise it is about to — or has — run into a wall because the program has not got to the wall bumping bit yet. (I am supposed to be a bit absent-minded myself, but this is carrying 'thinking about something else' to extremes.)

Further distinctions between the payroll programs and the robot programs may be made. The payroll computer does not require any knowledge of the nature of space and time — indeed it has no 'knowledge' of what it is doing. In fact it is a classic GIGO program — input 'BLOGGS, F:PAY RATE — 97.5' and poor old Fred, gets a negative pay packet and is unlikely to be

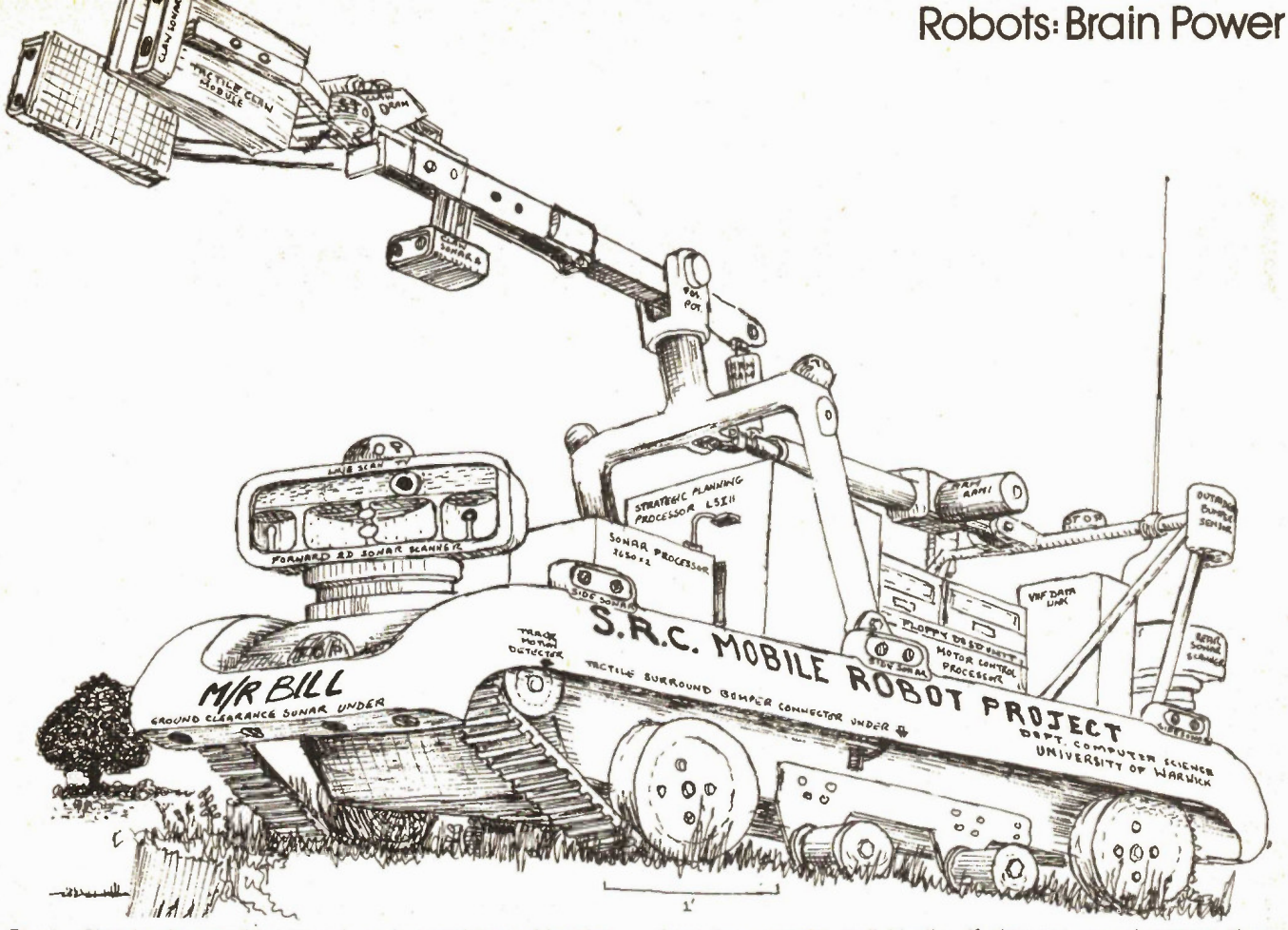

Fig 1. Sketch of a possible research project under consideration at Warwick University, Robot Laboratory. All the various sensors have been proven individually, if they get enough money they want to prove them collectively.

mollified by the apparent tax rebate and returned U. I. C. contribution. The program does not know about the positive nature of pay — much less the negative attitude of Fred.

Central to many robot programs is a set of stored information which is generally called the world model. The complexity of this model is chosen to give the robot some knowledge of the real world without giving useless information. It is no use informing a robot that trees and grass are green if it uses infra-red vision — whereas the information that grass is on the ground and trees stick out of it is useful.

The robot program need no longer take sensor or command data at face value. It compares incoming data with world model data for 'reasonableness'. If a wall appears to be moving (program checks sonar range to expected wall with world model distance between computed position and wall position and finds continuous variation) the program can quickly check with other fixtures to see whether it is sliding about itself or an unknown flat intruder is present or the wall is actually moving (the latter two cases may not be distinguishable). If an external command to move forward occurs the program can first check with the world model to ensure that no obstruction is to be expected and then check during the movement that an unexpected obstruction does not exist.

The unexpected obstruction leads us into a really intriguing area of robot technology. Having found a palpably real 'thing' and perhaps having discovered a few useful facts about it (does it move if pushed? does it move by itself? is it round? how wide is it? can it be circumnavigated? does it emit ultrasound? does it emit light? etc., etc.) these facts may then be entered into the world model by the robot itself. This may seem a small step, but for robot-kind it is a giant wheel-turn. The robot's behaviour is governed by comparing the incoming data with the stored world model data, but the robot itself is modifying this data — therefore the robot is modifying its future behaviour. This is at the very least a form of learning — that is to say, it is to some extent unpredictable.

FREE WILL

The robot is not deterministically programmed. There is an old saying about computers to the effect that the program is only as good as the programmer. In the case of robots this is no longer true in its original sense since two programmers are at work. In addition to the human programmer the totality of the robot's environment acts as a 'programmer'. Since the mechanics of the world are imprecise this second programmer never repeats is program exactly.

This indeterministic nature becomes clear when during a robot operation something surprising occurs and I am asked what is it doing. I usually have to say I do not know since the only way to find out for sure is to get the robot to explain in some way or to stop it and inspect its memory. Either way can take some time. There is a

well known robot simulation program (illustrated) which deals with manipulations of stacks of geometric solids such as cubes and pyramids — the interest being that while you can stack cubes upon cubes and pyramids on cubes you cannot stack anything on a pyramid. This program has the advantage for the layman of communicating via a computer terminal in a reasonable facsimile of English. Having completed some long sequence of moves to stack a small blue cube on a big red cube (involving clearing everything on top of both cubes out of the way) the computer pauses and the programmer asks it: ''Why did you move the green pyramid off the blue cube?': the computer answers 'To reach the blue cube.' The programmer probes further: 'Why did you move the yellow cube off the red cube?': the computer answers 'So that the blue cube may be placed on the red cube.' The programmer in great inquisitorial enthusiasm asks 'Why did you place the blue cube on the red cube?'. With the reserve only computers can muster, it replies 'Because you told me to.' This 'back-tracking' is relatively easy in a simulation program and the computer used was very large. However, in a small mobile robot program space is at a premium and exotic 'chatty' communication impossible. The same space premium forbids the storage of *all* events — it is necessary to build in methods of selectively removing surplus data — a forgetory if you like. This is akin to the short term memory system we appear to use: important stuff is kept and the junk is forgotten. This selective 'purging' may remove the data required for back-tracking and it may be impossible to determine why the robot behaved as it did in a particular situation.

The robot may be given a bag of problem-solving tricks for using in conjunction with its memory one of these may, for example allow it to solve the problems of getting about a maze-like environment as quickly as possible by 'mentally' finding the route before actually covering it (Fig. 2). There may be other specific strategems for manipulation and so on. At the moment of writing however, the robot is not really capable of learning new tricks for itself. This may require an extension of the world model concept to cover more of the dynamic and sequential aspects of task learning.

HERE, BOY...

Robots are not yet capable of the full range of intelligence we expect even from an animal. They cannot learn new tricks, yet they can solve goal-seeking problems which would baffle a dog and can communicate in English with some degree of understanding. Clearly they do not fit into our usual categories for intelligence. The term 'machine intelligence' should be considered for the moment as standing apart from our normal spectrum of intelligence. When we know where to put it in that spectrum we will have learned much more about intelligence itself. Experiments with robots and in the field of Artificial Intelligence will help to elucidate this age-old puzzle of thinking. I suspect that just as in movement the robot is more likely to use wheels than legs it will use something dissimilar in structure to the brain for its 'thinking.' What is important is that as we understand the dynamic principles which govern both wheel and leg we also find the principles that govern both machine and biological intelligence.

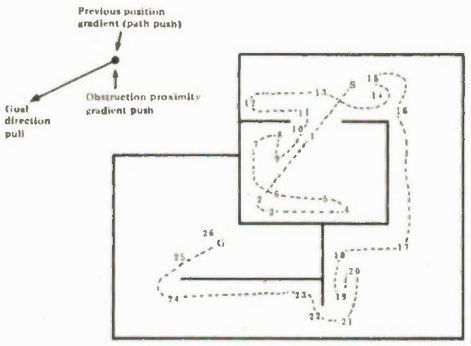

1 MAKES BEELINE FOR GOAL
2 WALL PROXIMITY DEFLECTS PATH
3 NEXT WALL PROXIMITY DEFLECTS PATH
4 PREVIOUS POSITION GRADIENT FALLS OFF AND OBSTRUCTION PROXIMITY & GOAL CAUSE TURNBACK
5 PATH AVOIDS PREVIOUS PATH
6 INERTIAL EFFECT OF PREVIOUS POSITION GRADIENT CARRIES IT ACROSS PREVIOUS PATH
7 CORNER CAUSES ROBOT TO TURN AGAIN
8 GOAL DIRECTION PULLING PATH AT 7 PUSHING
9 TOO MUCH PREVIOUS PATH REPULSION ROBOT EXITS
10 AVOIDING WALL AND PREVIOUS PATH
11 GOAL PULL TURNS ROBOT
12 CORNER CAUSES FOLDBACK
13 THE DOORWAY 1 10 11 TOO FULL OF PREVIOUS POSITION REPULSION— INERTIA EFFECT CAUSES PATH CROSSING
14 15 16 DITHER CAUSED BY RAPID CHANGES IN RELATIVE IMPORTANCE OF GOAL PULL AND PATH OR OBSTRUCTION PUSH
17 CLEAR RUN DOWN WALL DIRECTED BY GOAL PULL AND OBSTRUCTION PUSH
18 19 20 FOLDBACK RESOLVED—PATH PUSH AND GOAL DIRECTION SORT IT OUT
21 22 DOORWAY NEGOTIATED BY GOAL PULL AND OBSTRUCTION PUSH
23 24 WALL FOLLOWING—INERTIAL EFFECT OF PATH PUSH OVERCOMES CHANGE IN GOAL DIRECTION
25 CLEAR HOME RUN
26 TWO JOULES OF DRAUGHT DC AND A PACKET OF CRISPS PLEASE!

Fig. 2. An example of what can happen when you tell a robot to travel from Start to Goal.

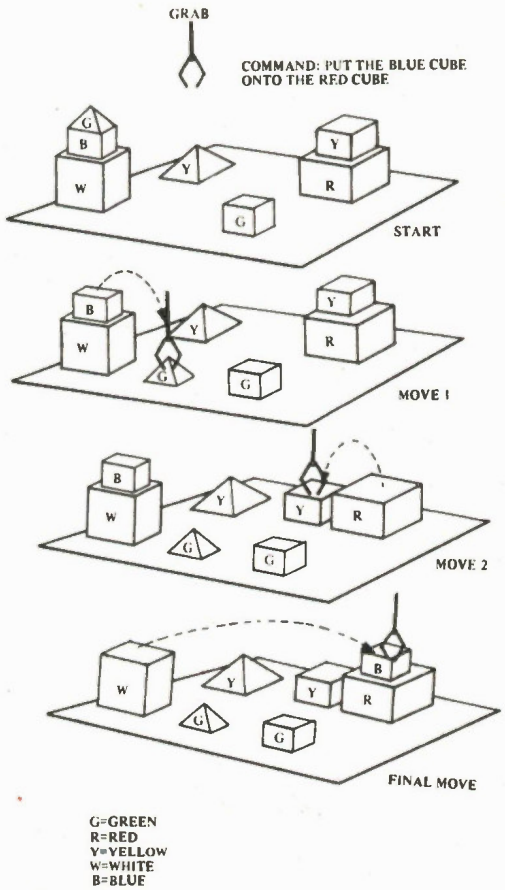

Fig. 3. The way a robot moves blocks around can lead to blunt replies from the computer..

Active Component Sales Corp.

TTL PLASTIC DUAL-IN-LINE I.C.'s

Part No.	Price	Part No.	Price	Part No.	Price	Part No.	Price	Part No.	Price	Part No.	Price	Part No.	Price	Part No.	Price
SN7400	.14	SN7422	.22	SN7448	.74	SN7489	2.45	SN74122	.40	SN74155	.45	SN74178	.99	SN74221	.89	SN74365	.52
SN7401	.14	SN7423	.23	SN7450	.16	SN7490A	.32	SN74123	.39	SN74156	.44	SN74179	.99	SN74246	1.35	SN74366	.52
SN7402	.14	SN7425	.23	SN7451	.16	SN7491A	.29	SN74125	.39	SN74157	.42	SN74180	.74	SN74247	1.29	SN74367	.52
SN7403	.14	SN7426	.24	SN7453	.16	SN7492A	.36	SN74126	.39	SN74159	1.25	SN74181	1.79	SN74248	1.15	SN74368	.52
SN7404	.17	SN7427	.24	SN7454	.16	SN7493A	.32	SN74128	.49	SN74160	.59	SN74182	.69	SN74249	1.15	SN74376	.95
SN7405	.17	SN7428	.25	SN7460	.16	SN7494	.60	SN74132	.67	SN74161	.59	SN74184	1.75	SN74251	.79	SN74390	1.15
SN7406	.29	SN7430	.14	SN7470	.29	SN7495A	.37	SN74136	.44	SN74162	.59	SN74185	1.75	SN74259	1.75	SN74393	1.24
SN7407	.29	SN7432	.20	SN7472	.29	SN7496	.69	SN74141	.99	SN74163	.59	SN74186	8.99	SN74265	.59	SN74426	.50
SN7408	.17	SN7433	.26	SN7473	.24	SN7497	1.89	SN74142	2.50	SN74164	.59	SN74S188A	1.50	SN74273	1.69	SN74490	1.59
SN7409	.17	SN7437	.24	SN7474	.24	SN74100	1.35	SN74143	2.60	SN74165	.59	SN74190	.57	SN74276	.89		
SN7410	.14	SN7438	.24	SN7475	.34	SN74104	.75	SN74144	2.60	SN74166	.99	SN74191	.57	SN74278	1.99		
SN7411	.24	SN7439	1.55	SN7476	.29	SN74105	.75	SN74145	.69	SN74167	2.29	SN74192	.55	SN74279	.59		
SN7412	.19	SN7440	.14	SN7480	.49	SN74107	.30	SN74147	1.35	SN74170	1.59	SN74193	.55	SN74283	.89		
SN7413	.35	SN7442	.49	SN7481A	1.09	SN74109	.34	SN74148	1.15	SN74172	5.75	SN74194	.59	SN74284	2.95		
SN7414	.40	SN7443	.85	SN7482	.79	SN74110	.39	SN74150	.65	SN74173	1.09	SN74195	.37	SN74285	2.95		
SN7416	.27	SN7444	.70	SN7483A	.64	SN74111	.49	SN74151	.42	SN75174	.59	SN74196	.74	SN74290	.64		
SN7417	.27	SN7445	.59	SN7484A	.99	SN74116	1.35	SN74152	2.95	SN74175	.68	SN74197	.74	SN74293	.64		
SN7420	.14	SN7446A	.74	SN7485	.89	SN74120	1.15	SN74153	.42	SN74176	.74	SN74198	1.19	SN74298	.89		
SN7421	.24	SN7447A	.74	SN7486	.29	SN74121	.35	SN74154	.79	SN74177	.74	SN74199	1.19	SN74351	1.79		

TTL LOW POWER SCHOTTKY PLASTIC DUAL-IN-LINE I.C.'s

Part No.	Price	Part No.	Price	Part No.	Price	Part No.	Price	Part No.	Price	Part No.	Price	Part No.	Price	Part No.	Price
SN74LS00	.16	*SN74LS32	.21	SN74LS90	.45	SN74LS145	1.05	SN74LS175	.49	SN74LS245	1.40	SN74LS298	.94	SN74LS377	1.35
SN74LS01	.18	SN74LS33	.24	SN74LS91	.99	SN74LS147	1.50	SN74LS181	1.80	SN74LS247	.95	SN74LS299	2.25	SN74LS378	.79
SN74LS02	.16	SN74LS37	.24	SN74LS92	.45	SN74LS148	.99	SN74LS183	2.70	SN74LS248	.90	SN74LS314	11.50	SN74LS379	1.25
SN74LS03	.18	SN74LS38	.24	SN74LS93B	.45	SN74LS151	.45	SN74LS190	.69	SN74LS249	.90	SN74LS315	13.00	SN74LS381	2.95
SN74LS04	.19	SN74LS40	.19	SN74LS95A	.59	SN74LS153	.45	SN74LS191	.69	SN74LS251	.49	SN74LS323	4.50	SN74LS385	5.50
SN74LS05	.19	SN74LS42	.45	SN74LS96	.99	SN74LS155	.66	SN74LS192	.60	SN74LS253	.49	SN74LS324	.99	SN74LS386	.35
SN74LS08	.18	SN74LS47	.89	SN74LS107	.30	SN74LS156	.60	SN74LS193	.60	SN74LS257	.45	SN74LS325	2.75	SN74LS390	1.69
SN74LS09	.19	SN74LS48	.85	SN74LS109	.30	SN74LS157	.42	SN74LS194A	.59	SN74LS258	.49	SN74LS326	2.80	SN74LS393	1.40
SN74LS10	.16	SN74LS49	.75	SN74LS112	.30	SN74LS158	.49	SN74LS195A	.49	SN74LS259	.95	SN74LS327	2.70	SN74LS395	1.55
SN74LS11	.18	SN74LS51	.16	SN74LS113	.32	SN74LS160	.59	SN74LS196	.84	SN74LS260	.29	SN74LS347	.80	SN74LS396	1.35
SN74LS12	.19	SN74LS54	.19	SN74LS114	.32	SN74LS161	.59	SN74LS197	.84	SN74LS261	1.35	SN74LS348	1.25	SN74LS398	1.99
SN74LS13	.35	SN74LS55	.19	SN74LS122	.45	SN74LS162	.59	SN74LS207	18.00	SN74LS266	.35	SN74LS352	.99	SN74LS399	1.50
SN74LS14	.49	SN74LS63	1.49	SN74LS123	.67	SN74LS163	.59	SN74LS208	18.00	SN74LS273	1.09	SN74LS353	.99	SN74LS424	4.50
SN74LS15	.19	SN74LS73	.32	SN74LS124	1.35	SN74LS164	.60	SN74LS214	11.50	SN74LS275	3.49	SN74LS362	5.50	SN74LS445	.95
SN74LS20	.16	SN74LS74	.26	SN74LS125	.42	SN74LS165	.99	SN74LS215	13.00	SN74LS279	.39	SN74LS365	.39	SN74LS447	.90
SN74LS21	.19	SN74LS75	.36	SN74LS126	.42	SN74LS166	1.50	SN74LS221	.89	SN74LS280	1.95	SN74LS366	.39	SN74LS490	1.70
SN74LS22	.19	SN74LS76	.32	SN74LS132	.60	SN74LS168	.99	SN74LS240	1.69	SN74LS281	4.95	SN74LS367	.39	SN74LS668	.69
SN74LS26	.23	SN74LS78	.32	SN74LS133	.29	SN74LS169	.99	SN74LS241	1.69	SN74LS283	.69	SN74LS368	.39	SN74LS669	.69
SN74LS27	.19	SN74LS83A	.59	SN74LS136	.33	SN74LS170	1.34	SN74LS242	1.64	SN74LS290	.65	SN74LS373	1.29	SN74LS670	2.75
SN74LS28	.22	SN74LS85	.77	SN74LS138	.48	SN74LS173	.59	SN74LS243	1.64	SN74LS293	.69	SN74LS374	1.29	SN74LS673	9.00
SN74LS30	.16	SN74LS86	.45	SN74LS139	.48	SN74LS174	.49	SN74LS244	1.69	SN74LS295A	1.55	SN74LS375	.45	SN74LS674	9.00

CMOS

Part No.	Price	Part No.	Price	Part No.	Price	Part No.	Price	Part No.	Price	Part No.	Price	Part No.	Price	Part No.	Price
CD4000BE	.17	CD4015BE	.69	CD4027BE	.39	CD4046BE	.99	CD4070BE	.29	CD4093BE	.40	CD4519BE	.47	CD4556BE	.65	40163PC	.99
CD4001BE	.17	CD4016BE	.35	CD4028BE	.57	CD4047BE	.95	CD4071BE	.21	CD4104BE	2.25	CD4520BE	.69	CD4581BE	2.25	40174PC	.89
CD4002BE	.17	CD4017BE	.62	CD4029BE	.74	CD4049BE	.33	CD4072BE	.21	CD4502BE	.85	CD4522BE	.99	CD4582BE	.79	40175PC	.89
CD4006BE	.87	CD4018BE	.69	CD4030BE	.35	CD4050BE	.33	CD4073BE	.21	CD4507BE	.45	CD4526BE	.99	CD4584BE	.60	40192PC	1.19
CD4007BE	.17	CD4019BE	.39	CD4033BE	1.45	CD4051BE	.54	CD4075BE	.21	CD4508BE	2.25	CD4527BE	1.09	CD4585BE	.90	40193PC	1.19
CD4008BE	.75	CD4020BE	.69	CD4034BE	2.25	CD4052BE	.54	CD4076BE	.79	CD4510BE	.88	CD4528BE	.69	40014PC	.59	40194PC	1.10
CD4009BE	.39	CD4021BE	.69	CD4035BE	.64	CD4053BE	.54	CD4077BE	.25	CD4511BE	.99	CD4531BE	.74	40085PC	1.09	40195PC	1.10
CD4010BE	.39	CD4022BE	.69	CD4040BE	.74	CD4060BE	.99	CD4078BE	.21	CD4512BE	.59	CD4532BE	1.19	40097PC	.60		
CD4011BE	.17	CD4023BE	.17	CD4041BE	.74	CD4066BE	.44	CD4081BE	.21	CD4514BE	1.95	CD4539BE	.99	40098PC	.60		
CD4012BE	.17	CD4024BE	.49	CD4042BE	.59	CD4067BE	3.95	CD4082BE	.21	CD4515BE	1.95	CD4543BE	1.39	40160PC	.89		
CD4013BE	.32	CD4025BE	.17	CD4043BE	.57	CD4068BE	.21	CD4085BE	.69	CD4516BE	.69	CD4553BE	4.50	40161PC	.99		
CD4014BE	.73	CD4026BE	1.39	CD4044BE	.55	CD4069BE	.21	CD4086BE	.69	CD4518BE	.79	CD4555BE	.65	40162PC	.89		

LINEAR INTEGRATED CIRCUITS

Part No.	Price	Part No.	Price
LM301AH	.39	LM709CN-14	.34
LM301AN-8 (Mini Dip)	.29	LM723CH	.49
LM304H	.79	LM723CN-14	.35
LM305AH	.99	LM725CH	2.40
LM305H	.69	LM725CN-8	1.50
LM307H	.39	LM741CH	.45
LM307N-8 (Mini Dip)	.38	LM741CN-14 (Mini Dip)	.34
LM309K (TO3)	1.69	LM741CN-8 (Mini Dip)	.29
LM311H	.74	LM747CN-14	.49
LM311N-8	.49	LM1488D	.74
LM318H	1.50	LM1489AD	.74
LM318N-8	1.25	LM1495N-14	1.25
LM323K	5.50	LM1496N-14	.99
LM324N	.54	LM2240CN-14	1.50
LM339N	.49	LM3046N-14	.58
LM555N-8 (Mini Dip)	.29	LM3081D-14	1.40
LM556N-14	.49	LM3302N-14	.49
LM567CN-8	.89	LM3403N-14	.82
LM709CN-8 (Mini Dip)	.35	LM3900N-14	.59
		LM4136N-14	.75
		RC4151N-8 (Mini Dip)	.79

VOLTAGE REGULATORS

7800 Series TO-220/LM340T	.79	1 Amp Positive 5,6,8,12,15,18,24 Volts
78M00 Series TO-5/LM340H	1.50	1/2 Amp Positive 5,6,8,12,15,18,24 Volts
7800 Series TO-3/LM340K	1.60	1 Amp Positive 5,6,8,12,15,18,24 Volts
7900 Series TO-220/LM320T	1.10	1 Amp Negative 5,6,8,12,15,18,24 Volts
79M00 Series TO-5/LM320H	1.50	1/2 Amp Negative 5,6,8,12,15,18,24 Volts
7900 Series TO-3/LM320K	1.95	1 Amp Negative 5,6,8,12,15,18,24 Volts

MICROPROCESSOR CHIPS

CPU's

Part No.	Price	Part No.	Price
8080A	4.95	6800	7.90

INTERFACE SUPPORT CIRCUITS

Part No.	Price	Part No.	Price	Part No.	Price
8212	1.95	8238	3.95	6810	3.50
8214	3.95	8251	4.95	6820	3.95
8216	1.95	8253	12.95	6850	3.65
8224	2.95	8255	4.95	6852	4.75
8226	1.95	8257	10.95		
8228	3.95	8259	14.95		

UV EPROM

Part No. 2708 Price $8.95

MOS Static RAM's

Part No.			Price
2114	4K (1Kx4)	450NS	$8.00
2102LFPC	1K (low power)	450NS	$1.49

MOS Dynamic RAM's

Part No.			Price
4060	4K	300NS	$4.50
416	16K	250NS	$13.95

UART's

Part No	Price	Part No	Price
AY5-1013A	$4.50	AY3-1015	$5.75

BRAND NEW!

JUST RELEASED

1979 IC MASTER

2500 pages

Complete integrated circuit data selector. Master guide to the latest I.C.'s including microprocessors and consumer circuits.

$39.95

Free Quarterly Updates

PRICES ARE IN US FUNDS. Federal and provincial sales taxes are not included and are extra. Conversion to Canadian prices will be done at the offical current rate of exchange at time of purchase.

$10 MINIMUM ORDER Add $2.00 to cover postage and handling

STORE HOURS
Monday to Friday 8:30-6:00 pm
Thursday and Friday 8:30-9:00 pm
Saturday 8:30-5:00 pm

Chargex (Visa) and Mastercharge accepted

Active Component Sales Corp.

5651 FERRIER ST.
MONTREAL, QUEBEC
H4P 2K5
Tel: (514) 735-6425

4800 DUFFERIN ST.
DOWNSVIEW, ONTARIO
M3H 5S9
Tel: (416) 661-1115

BAXTER CENTRE
1050 BAXTER ROAD
OTTAWA, ONTARIO
K2C 3P2
Tel: (613) 820-9471

Robots: Building Guide

Dr. Michael Larcombe and ETI Special Correspondent Dr. Peter Sydenham give a background into building your own robot.

PROBABLY THE MOST IMPORTANT thing to realise is that successful robots do not grow as can an electronic circuit development. Mechanical structures and components are vastly more time- and money-consuming to alter as changes are seen to be needed. Because of this the deficiencies of mechanical elements incorporated into a robot tend to be retained. Add a few of these shortcomings together and the device will not perform as expected.

Thus planning is vitally important from the word go. Many decisions must be made before money or time is committed to specific hardware. The ability to imagine and synthesise the finished product before it is built is the skill that humans have over the robot — so use it well.

GETTING UNDER WAY

The imaginative process of design is greatly aided by the use of diagrams, sketches, plans and written results. A tidy report file must be kept going from the start of the project.

After deciding what functions the robot is to fulfil, the next step is to develop a master system diagram of the whole, detailing the various sub-systems and their interaction with other sub-systems. Figure 1 is an example. Wherever practicable, try to develop the overall system as one built from basic system units that can be developed and tested as separate units in isolation.

Keep the master schematic block diagram updated each time major changes are incorporated. For each block, or group of blocks, there should be further diagrams showing more detail of the construction and circuitry. Even the simplest robots can soon become too complex to record as a whole. An orderly hierarchy of records is needed.

When the stage of realisation of adequately basic schematic diagrams is reached, the design can then progress to the creation of the blocks, designing each sub-unit to suit the specifications decided earlier. At this juncture (and later) several earlier decisions may turn out to be inadequate so, once the final change is agreed upon, go back and modify the master system and other blocks as is necessary.

It is always preferable to design the sub-units so that they can be tested easily. It helps build confidence in the design as they can be pre-tested before final assembly of the whole. It also makes good sense to be able to isolate a unit easily when a fault occurs that must be traced. Pre-testing gives useful test results for later comparison. Assembly should also be designed to allow all major subcomponents to be removed easily for maintenance and repair. There is nothing so frustrating as a fault occuring right down inside the structure where layer upon layer of mechanics and electronics must be removed to get to it. Make use of hinged panels, plug-in circuit boards, easily bolt-on drive and sensor assemblies with removable circuit connections. For one-off prototypes there is good sense in building in far more flexibility of assembly and disassembly than could be tolerated in a mass-produced, well-tested design. Where possible, build the working unit as a second one, retaining all developmental work for possible later comparison.

Always attempt to design sub-units so that they do not interact with other sub-units. For example, a manipulator arm must be sufficiently stiff in bending and torsion to retain its shape when loaded. If it bends, the position of the hand could differ from that indicated by position sensors which, in turn, will try to correct out an error that was not there by the ideal design standards. If the power supply droops when a load comes on to an actuator, this may alter the supply voltage to circuitry, altering the performance of other components. Where interaction results it may alter the fully-assembled units' performance in ways that are not easily discovered at the testing stage of the sub-units.

As sub-units are created their circuit drawings must be laid out neatly with all component values marked. Good mechanical sketches should be made. It is all too easy to forget that a few months later, after working on other aspects of the robot, one does not remember the detail tackled previously.

CHOICE OF COMPONENTS

As the sub-systems harden in design so will the specifications of the elements needed. They will generally be of optical, mechanical or electronic nature. At some stage each specific component must be located, if procurable, or made, if not. Circumstances will largely decide the choice. Optimally one chooses the best available unit, but in reality such factors as cost, availability, life and replaceability will force the designer to make compromises. The cheapest may suffice. Usually, but not always, the more expensive mechanical component is the best to use. Mass-produced com-

ponents from construction kits and popular toys, such as aero models and model trains, are good value. Bicycles, domestic appliances and motor car parts are another source of quality low-cost assemblies. Specialised electromechanical construction kits, such as Meccano, Fisher-Technic, FAC and Presto, are easy to employ, but they can be expensive to get started with. They also can lack the rigidity of structure often needed.

One thing to avoid is the use of complex components (such as motors) that you possess already but which cannot be replaced or repaired easily.

Choice of alternatives is less important with electronics as most solid-state devices now have many roughly equivalent alternatives, but, even so, steer well clear of using devices that are not currently marketed at low cost on an extensive basis with double or more sourcing.

STRUCTURAL FRAMES

The robot's functions are made possible through actuators and sensors causing the whole and the limbs to move as desired in a dynamic sense. The structures holding the limbs and the limbs themselves must be adequately stiff — that is, they must not deflect or twist more than is allowable under load. There is no such thing as a totally stiff structure, for no material known to man is inelastic. A basic aim of structural design for a robot is to provide an inelastic structure having minimum mass. This rule especially applies at the extremities of rotating arm-like structures where rotational inertia increases more rapidly than linear elastic deflection as the distance from the centre of rotation increases.

Elasticity of a structure can introduce many unwanted interactive couplings — weak gear train mounts may allow the gears to unmesh as the frame twists with increasing load. Smaller misalignments will usually introduce increased frictional losses.

The principle of triangulation enables rigid light structures to be built. It says that each segment of a panel or beam required to be stiff in the plane of its flatness is made from triangles of connected limbs. Open squares and rectangles must be made into triangles by the addition of a central cross member. Linear rigidity is relatively easy to achieve; torsional rigidity is much harder to obtain for that mode of flexure requires stiffness at 45° to the linear axis.

STIFF AND FLOPPY MEMBERS

Solid thin sheets obey the triangle rule and are always theoretically stiffer than a sheet which is lightened with holes or made from elemental bars. However, the solid, thin 2D members are rarely better than the same weight of the material re-arranged as a 3D member which will possess torsional rigidity as well.

Structures can be made incredibly stiff and light if the maker is prepared to put enough work and cunning into their design.

Triangulated structures work on the principle that members are either in direct axial torsion or compression. If in tension they can be as thin as their strength requirements allow, but if in compression a long thin member will buckle and fail well before it collapses through lack of compressive strength. Compression members are, therefore, kept as short as possible and have stiffness to increase their buckling strength. Tubes

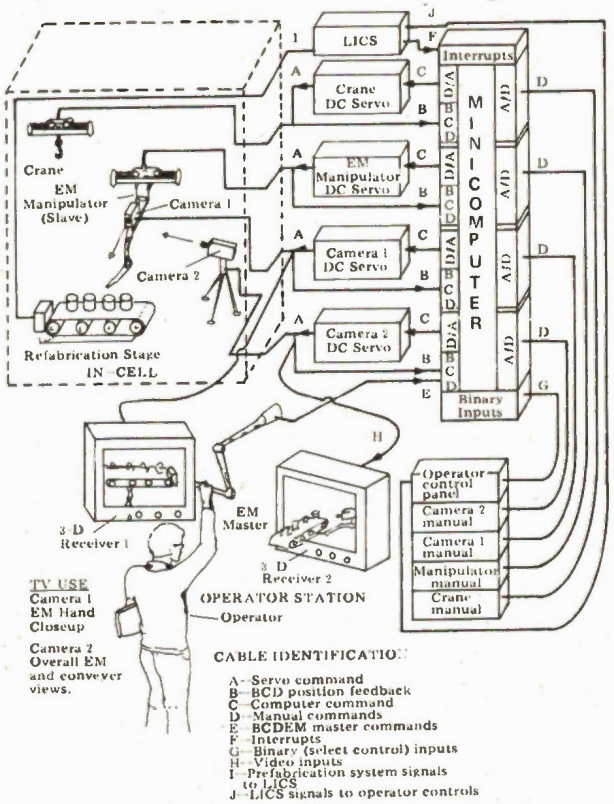

Fig 1. Systems diagrams, like this of a manipulator for a high-temperature gas-cooled reactor in the U.S., must be kept up to date as development proceeds. Keep subsystems as separate entities as much as possible.

and angles are commonly used. (Think of early aircraft structures using struts and wires.)

STRUCTURAL CHOICE

The choice of materials is not always easy, for light strong materials, such as aluminum alloys, are not easy to join by the amateur — rivets or bolts must be used, as welding and soldering are not possible without special equipment. Avoid pure aluminum for structures — it is too soft. Aluminum does not need a protective coating but looks better if it has one.

Steel is more easily joined by welding and hand-soldering or brazing, but, although having the greatest stiffness of common metals, it is one of the heaviest. It corrodes easily — plating or painting is a must for all steel parts of a well-made robot. It is a mistake to think steel parts can always be painted after the robot is finished — there are usually too many wires and components attached to do a good job afterwards. So paint or plate as you proceed *before* assembly.

Plastics are a relatively new element of structural design. Very respectable jobs can be made using modern adhesives and plastic formulations. The catch is that they are comparatively flexible and heat-sensitive. As they get hotter, they may sag, will certainly get more elastic and, worse still, may deteriorate completely in the long term. Great care must be exercised about the choice of plastics used.

Wooden materials have their place, but always opt for waterproof qualities that are well seasoned or treated to retain shape.

Modern glues, such as instant-epoxy kinds and filler-based epoxy resins, are often an ideal choice for fastening members. But, again, care is needed in their use. If in doubt, conduct tests on test specimens before

embarking on the real job. The simplicity of glues often leads one to make quick joints that are impossible to open when the unit requires disassembly. The easy path is not always the best in the long run.

An important point often overlooked is that the robot frameworks may be subjected to excessive loads and forces during the testing and development stage. Transportation of the whole, or merely picking it up or having limbs moved by external forces such as prying children's hands, can often break assemblies that are well within their design limits of need. If this is the case, try to incorporate safety features, such as clutch drives, that will slip for excessive load.

MOTORING

Most DC motors used are cylindrical in nature and use permanent magnets to supply the field needed. They will have a relatively small number of commutator segments and are best run at quite high speeds. For slow speed shafts a gearbox is needed to reduce the motor speed and increase the drive torque available. High ratio gearboxes, however, introduce backlash and friction problems that reduce the effectiveness of tight servos. Avoid high-ratio gear trains and any other kind of drive with slop in it. Worm drives can also present problems as they cannot be driven by the output shaft. The better systems use anti-backlash gear wheels, but these are expensive. High gear-up ratios amplify the rotational load inertia seen by the motor, so keep high-speed loads light if good response is needed. Fastest energy exchange occurs when the load inertia seen by the motor equals its own value — similar to the energy transfer law for electrics.

The printed armature, radial shape, motor is well suited to robot work as it has many commutator segments, great overdrive capability for use in transients and excellent low-speed performance. Gears are often unnecessary with servos built of these. Inexpensive versions are available (car fans, for example), but they usually lack a second output shaft or an inbuilt tacho. Versions with inbuilt tachos are really satisfying to use but are priced for professional robot designs.

Simple DC motors from toys are rarely adequate for long. They are not designed to last. The extra cost of better motors will be found worthwhile.

REMOTE CONTROL

Control from a position away from the robot can be had most easily by using a wire link in the case of fixed manipulator machines and limited movement mobiles. Wires are certainly the cheapest and most reliable link, but in the case of mobiles and some special applications, non-contact telemetry is needed to and from the robot.

Radio control would be the obvious choice as many marketed systems are available at reasonable prices. Model aeroplane control, and more recently model car and boat controls, are easily adapted to form command links. As most robots work at power levels greater than the actuators used in model planes, it will be necessary to add power amplifier stages (relays for simple on-off control, linear amps for proportional controllers) at some convenient output point of the telemetry system.

Acoustic senders working at around 30 KHz can be used for systems needing detection from any direction of robot orientation. Optical beams are restricted as links to situations where the beam remains aligned with the robot receptor.

SEE ME, FEEL ME. . .

The basic senses of human beings are touch, sight, hearing, smell, taste. These provide many ideas for robot sensors. Other senses exist, such as ultrasound, radio waves, infra-red and ultra-violet radiation, that are not given to humans.

When finalising a sensor stage ensure that its output signal level, impedance and frequency response suit the stage, or stages, it must drive. Most sensor outputs need amplification, and it usually makes best cost sense to use an integrated linear circuit to obtain the gain. IC stages generally have low output impedance and set voltage swing limits. Typical values will be ± 10V with a zero bus for linear devices (higher are available but are more expensive), zero bus with +5V for TTL logic and a wide range of choice for CMOS logic. There are few standards so it is not possible to categorically define signal levels. Choice of levels is, however, worth serious study before the design goes too far, as the fewer the bus voltages used the better. They must also match the chosen supply source. Try to avoid the need to create numerous bus voltages from basic supply rails — zener and series regulator units waste power.

The cost of low resolution analogue to digital and digital to analogue converters (low resolution will usually be adequate in robots) is now such that the output form of the basic sensor can easily be converted to the other signal form if it is more appropriate.

Space permits only a brief account of a few typical sensors used in robot devices.

TOUCH ME. . .

Simple touch sensing is easily done with a light arm or feeler that operates either a microswitch for on-off control or a linear or rotary potentiometer for proportional control. Whereas virtually instantaneous signal changes can be created in electronic circuits, the same is not true of mechanical systems. A touch-bar moved as warning that the robot must stop immediately should be able to deflect sufficiently as the unit comes to rest. Either make the bar flexible or give it a spring joint where it can bend elastically. The amount of deflection needed depends upon braking effort, speed of robot and its mass. As a guide, a 20kg unit moving at walking pace and being braked by a reversed connection 100W motor may require as much as 50-100 cm of overtravel, depending upon the frictional force existing between its wheels and the surface it is on (decided by coefficient of friction, weight on the wheel and braking force on the wheel axle).

Tactile sensing, such as is needed to control the clamping force of a closing hand, requires proportional measurement of closure force.

A rubber or plastic tube filled with air makes a good protective buffer. Addition of a pressure-sensitive switch into an outlet enables the buffer to cut power supplies or reverse the velocity drive. Obviously, imagination and innovation can produce many more touch sensors.

SEE ME

Human sight is sensitive to only a very narrow band of the available electromagnetic radiation spectrum. Robot 'sight' can extend much further to make use of infra-red and radio frequencies as well as those in the visible region. Certain infra-red sensors can detect the thermal radiation of room temperature bodies and resolve them

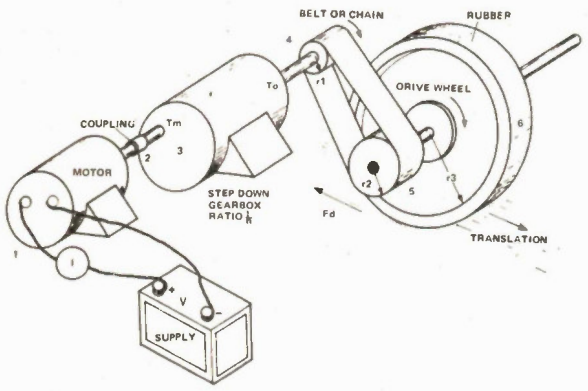

Table 2: Calculations for a hypothetical drive system

At 1	Power input = V.I = W
At 2	Power from motor = W. motor efficiency = W. Torque at output shaft Tm from data sheets
At 3	Coupling may lose up to 5% of energy transfer, but not torque unless slip occurs
At 4	Torque at gearbox output To = Tm × n
	Shaft speed = $\frac{\text{Input shaft speed}}{n}$
	Power available = Power at input × Gearbox efficiency
At 5	Torque at wheel shaft = gearbox output torque $\times \frac{r_2}{r_1}$
	Wheel speed = gearbox output shaft speed. $\times \frac{r_1}{r_2}$
	Power to move robot = power out of gearbox × efficiency of belt or cahin drive
At 6	Force at wheel perimeter $\frac{\text{shaft torque}}{r_3} = F_D$
	Power available is as at 5 unless bearings lossy
	Speed of robot translation = wheel speed $X2\Pi r_3 X$ slippage allowance
	Force of translation = F_D × coeff of friction × load vertically on wheel

against backgrounds at a different temperature. If at the same temperature as the background, however, the object can go undetected. This effect, called 'washout,' exemplifies just one of the many kinds of sight problems that robots need to tackle. Most worthwhile seeing conditions resolve to those of pattern recognition once the 'visual' picture is transduced by appropriate sensors into electrical signals. In robots the higher order seeing problems to be tackled require extensive data processing facility. The microprocessor now promises to provide the kind of power needed at realistic prices for amateur robot projects.

The easiest to invent and build is the photodetector that responds to an increased intensity source using the DC level change as the sensed signal. This kind of sensor is suitable to move the robot toward or away from bright lights or to increase or decrease its activity as the ambient light level changes. It is of little value in applications where the robot has to seek out a certain 'marked' place or beacon or follow a moving light marker.

In these cases, the source light can be coded by amplitude modulating it to at least 10% depth at some convenient frequency which is not a multiple of line frequency (or it may well fall in love with all fluorescent and incandescent line fed lights).

Similar principles work for infra-red and microwave and also for acoustic methods. Seeing is usually taken to mean line-of-sight working only. Strategies may have to be programmed to ensure the robot obtains a line of sight long enough for it to learn of the direction to move to. (A sample and hold store of position is a must for such applications.) Modulated systems, although generally unresponsive to moderate ambient background illumination, will usually be affected by severe ambient levels, for these may saturate the circuitry. In such cases the output produced should be a fail-safe kind. (Many a robot has been camera-shy when powerful flood lights are turned on for the public debut on television or film.)

HEAR ME. . .

Sound waves behave in much the same way as electromagnetic waves, but with one big exception — they travel much slower. For this reason acoustic senses and senders are a popular choice for robot sense of position and for detecting presence. Their use is mostly based on the radar principle of sending a pulse (or continuous wave) and monitoring the time (or phase) delay of its return. Acoustic radars give good positional sensitivity at room and workshop size ranges. Use of ultrasonic (above the 20 kHz limit of human hearing) frequencies help avoid signal-to-noise ratio problems in acoustically noisy environments. Beware, however, of ultrasonic sources produced by machinery.

An array of inexpensive piezo-electric crystal receivers mounted in a pattern across the breadth and width of the robot frame can, after some signal processing, detect the location of a single source. Two units mounted on a tracking robot antenna can be used as a binaural position sensor. A single send-cum-receive unit mounted on the robot is capable of locating obstacles for a survival mode of robot operation.

SMELL ME, TASTE ME. . .

Of the human senses these two have barely been developed in hardware form. Both are related to the presence of chemicals and therefore the methods of chemical analytical instrumentation are relevant. However, few analysers exist that are cheap enough for the hobbyist pocket. Certain measurements, such as CO_2, CO and O_2 detection, can be achieved cheaply by sensing a simple effect of these gases on the temperature of a heated resistance (CO_2, CO) or via the voltage generated by a special cell (O_2). Smoke is more easily sensed as an attenuator of light than by the presence of its chemicals. An analyser capable of detecting smells such as rotten fruit, individual people, or the finest perfumes requires the use of a mass spectrum analyser or other sophisticated methods costing huge amounts of

▶

money and weighing many kilograms. In short, smell and taste are not very profitable senses to use as yet. An exception is robots already made commercially that seek out the centre of fires for extinguishing purposes.

ACTING OUT A ROLE

Sensors produce the input signals tell the robot what is happening. To get the robot to act on such commands these signals are processed and used to drive power output devices, called actuators. These convert, in the main, the power source energy into mechanical work. Actuators for robots usually require electrical signal (analogue or digital) inputs providing linear or rotary motion via wheels, gears, belts, tracks and what have you to do work.

Robots require motions that give speeds and positions. Basic motions needed, depending upon use, are continuous linear motion (wheels driven by motors, cables would up by motors, rack and pinion), short-stroke linear motion (solenoids, restricted length rack and pinion), unlimited rotary motion (direct motor output, geared up or down motor motion), and limited angle rotation (rotary solenoids called torquers, pinion and wheel or rack). Chains, belts, pulley and flat flexible strips are elements used to provide various kinds of motion, including converting rotary motion to linear and vice-versa. The commonest and cheapest actuators are solenoids and motors. Where controlled variable torque is needed, DC systems are usually used.

Wheels are predominantly used to move mobiles. Walking is a spectacular method, but is far more difficult to design. Wheeled systems must be able to steer easily — car-like methods require intricate movements to escape a blind corner. Rapid response drives will require as much of the robot's weight on driven wheels as is possible. All wheels supporting weight but not being driven reduce the tractive effort available. The coefficient of friction of drive surfaces must be chosen to suit each application, or else excessive wheel spin will occur.

OPEN AND CLOSED LOOP

At this point it is worth devoting some time to the concept of closed-loop actuator systems, for all worthwhile robots use these. The reason is as follows: Consider a small motor coupled to drive a robot via wheels through a step-down gearbox. To get the robot moving requires more initial power than when it is running under steady load because friction of the static drive is greater than when running. Thus, as soon as it begins to move, the input must be reduced or else it tears away. Also, when the robot comes to a rise, the input voltage setting must be increased to give more power. This kind of controller is called an open-loop case. The real aim is usually to have the robot run at any given time at a steady known speed, over the range from zero to full speed, for all conditions of load.

This is done in a closed-loop system by sensing the actual speed of the motor (in electrical terms, by generating a voltage with a separate generator called a tacho coupled to the motor shaft) and comparing this value with that which represents the desired speed. The difference, called the error signal, is used to increase (or decrease) the motor current so as to bring the speed up (or down) to the correct value, where the generator output equals the reference level. Motor speed will, within available power limits, be held closely at that set by the input reference voltage level, despite changes in load. If the motor current can be reversed by the circuitry, a command for zero speed (zero reference voltage) given at, say, full speed, will attempt to reverse the motor giving quite impressive braking. As the speed approaches zero due to the braking, the error falls to zero and the motor comes to rest.

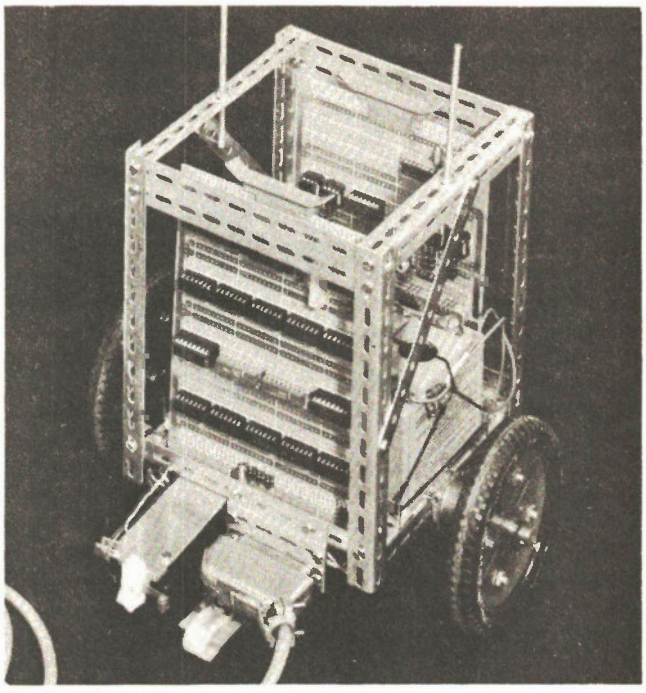

Fig 2. HORACE, a Warwick University Robot Laboratory mobile, is simple to make and uses commercial parts. Robots like this are well within the scope of amateurs. Note the ease of access to parts.

Good servos can provide tight control with rapid response to new commands. Their slight disadvantages are a need for a more sophisticated (but well worthwhile) system that costs a little more if the right motor is chosen, the chance of instability if it is too highly tuned and the possibility of having too responsive an action that may shear parts and slop liquids (but at least this is easily slugged or smoothed by appropriate integration of the error signal within the control loop). Overall, however, the performance of a closed-loop servo is vastly superior to the open-loop equivalent.

POSITION SERVO-SYSTEMS

Position controls also should be closed-loop in operation. Here the actuator that brings about a positional change is fed an error signal generated from a position-sensitive sensor. An arm elbow joint, for example, would have a potentiometer rotating at its pivot axis. The voltage produced by the potentiometer is compared with the given reference signal providing the error to drive the actuator accordingly. This servo will ensure that the arm goes to the angle desired by the input reference voltage value, regardless of load (within limits of maximum load capability). If the arm overshoots the correct position, the error reverses bringing it back by reversing the actuator. Servos can be adjusted to approach the final value in a quick fashion with overshoots, or slowly, without overshoot.

Position servos benefit by the use of a tachogenerator driven by actuator. The tacho signal is used to feed a rate of error reduction signal into the closed loop, making it move faster when wildly wrong in position and slower when nearly at the correct place, thereby giving it a

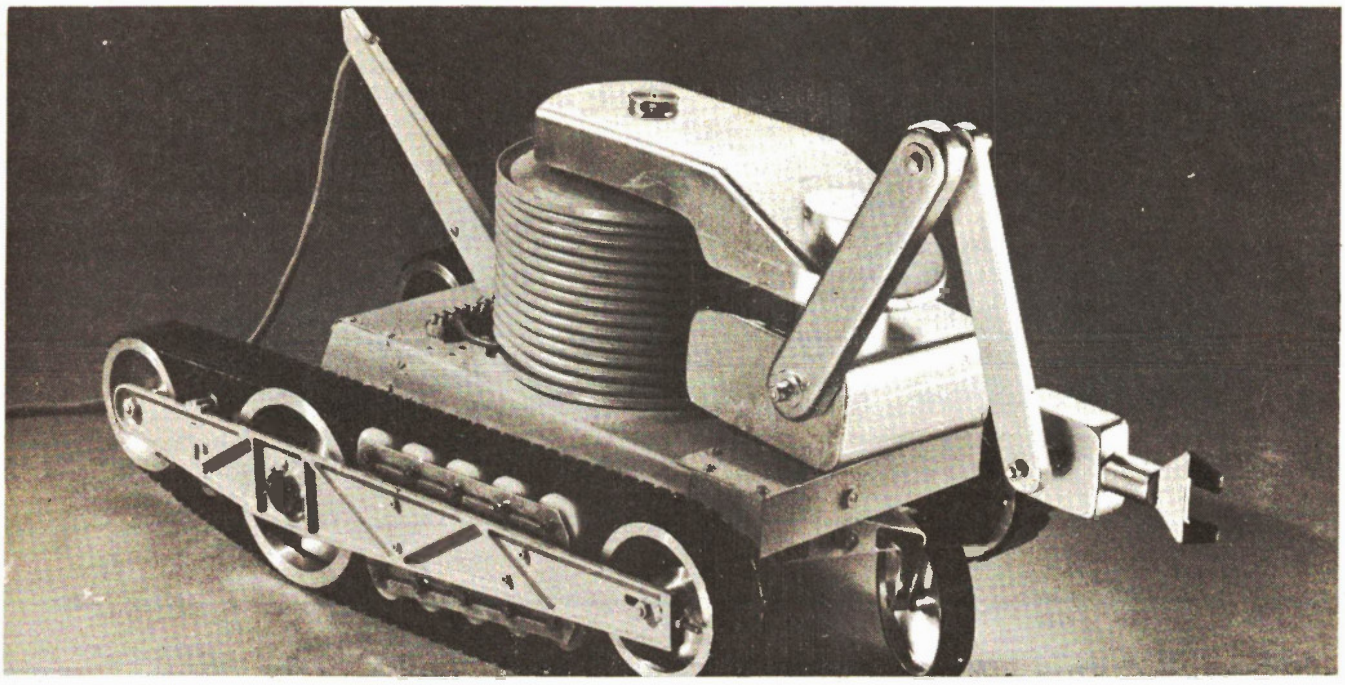

Fig 3. This working model of RIVET explores an ingenious method of transport. It can go over obstacles twice its own height.

chance to stop at the right place. This mechanism is known as damping.

As the gain around the servo loop is increased, the response gets tighter, smartening up. However, a point is eventually reached when the loop will begin to oscillate, first giving small dither around the correct place and then as the gain is further increased, rising to massive oscillations. Reducing the gain is the easiest way to combat this but not the cleverest. Compensation is the technical name used for the process of adding an integration and/or derivative of the error signal to the error so as to obtain higher gain with reasonable stability. The tacho of a position-servo does just that. Explanation of this is beyond this account, but is well treated in many books on linear control systems. The above explanation is somewhat simplistic but adequate as a basis. In reality the velocity servo described will run at slightly lower speeds than called up, as an error must exist to generate the torque needed to hold the speed.

FINAL TESTING AND MAINTENANCE

The development of the robot should proceed in an orderly manner, each sub-unit being pretested and made as acceptable as thought necessary before final assembly begins. As each unit is added to the final whole, checks should be run to see that it still works as it should. See that the other units still work properly, as unexpected interaction is common in robot development. It is much easier to test for this as you go from stage to stage than to try and find which unit alters what at the end. As defects are detected — bugs always occur — rectify them before moving on. There is a natural tendency to rush on to the apparent end, only to be disappointed because it does not work properly. In other words, be patient; it is worth it.

Once the whole robot is "all systems go", the next stage is to conduct some field-trials. Put it through its paces doing the tasks it was intended to, but in situations where damage is minimized if the behaviour is not as expected.

Monitor the initial hours of work carefully looking for overheating of electronic and mechanical components, and listening for odd mechanical noises that indicate too much slop or friction. These may lead to premature failure if left unmodified. Limbs and other members that appear weak are more easily strengthened before they break than after! Smoothness of operational sound is a good indicator of satisfactory mechanical design.

Unlike electronic circuits that, once made, are initially maintenance-free except for faults, dynamic mechanical systems require regular attention. Lubricate bearings, slides, cables and pivots regularly, but do not overdo the oil or grease. Dry graphite may be better than oil in some applications. Areas of wear will need adjustment with use. Build this into the design to begin with, where possible, as retrofit is always harder.

Too often ignored is the final documentation. When the project is seen as complete, go back to the master diagram and files on the whole system and sub-system modules and update them to the latest stage. If you feel the robot will be used regularly over several years, or if it was built for the use of someone else, it is imperative that the documentation is readable, neat and complete enough to be a good guide to someone else at a time after its details have been forgotten by its builder.

Creating a robot is fascinating and rewarding. How well it operates is a matter of your design sense plus ability to execute the design in a professional manner. We hope the above, albeit brief, introduction will help, and wish all robot constructors rewarding, successful projects.

We at ETI would be excited to hear of, and eager to publicise robot projects which our readers know of or are involved with, be they personal interests, industrial or university projects. Send pictures, details of features, and tips on novel construction methods or component supply to: ETI Robot Projects, Unit 6, 25 Overlea Blvd., Toronto, Ont. M4H 1B1.

BINDERS

In response to many requests from our readers we have arranged for binders to be made so that you can keep ETI's first volumes together and protected from damage. The binders are covered in attractive leather-look black plastic and are designed to hold twelve issues. The ETI design is printed in gold letters on the spine.

The binders cost $6.00 each, which includes postage and packaging. Do not send cash — you can pay by cheque. Mastercharge, or Chargex Credit card orders must include your account number, the expiry date, and your signature. In all cases allow six weeks for delivery. Send your order to ETI Binders, Unit 6, 25 Overlea Blvd., Toronto, Ontario M4H 1B1. Don't forget to include your name and address. Ontario residents add 7% PST.

You Too Can Look Like This

Unknown T-Shirt wearer demonstrates how to use.

NEW PICTURES!!

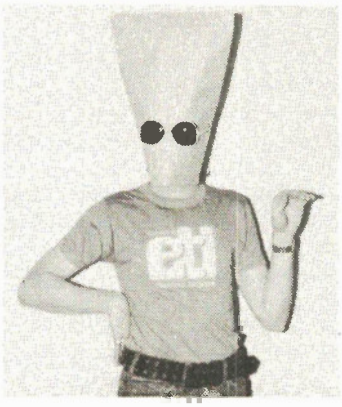

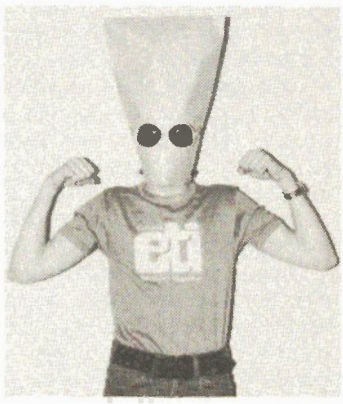

They're here! ETI's new Canadian-made polyester-cotton T-shirts are now in our office awaiting your order. These are really top quality — not cheap foreign shirts that fade and shrink when you wash them. They're nice and long to stop draughts around your midriff. Colour scheme is blue with white design.

Fill out this coupon and send to ETI T-Shirts, **Unit Six, 25 Overlea Blvd., Toronto, Ontario, M4H 1B1.**

LARGE (40")
☐ Number required

MEDIUM (37")
☐ Number required

SMALL (34")
☐ Number required

Please send me ____ ETI T-Shirts, sizes as indicated. I enclose $____.

Number of Shirts	1	2	3	4	5	Ontario Residents add
Price	$5.50	$10.00	$15.00	$20.00	$25.00	Provincial Sales Tax

Name _____

Address _____

Town _____ Prov. _____ Postal Code _____

DO NOT SEND CASH

☐ Cheque enclosed. A/C No. _____

☐ Bill Mastercharge. Signature _____

☐ Bill Chargex. Expiry Date _____

Digital Tachometer

Compact unit offers both 10 rev resolution and short response time.

WE HAD OFTEN considered the design of a digital tacho for automobile use, but had rejected several schemes as we were unable to get both good resolution and response time — the two seemed to provide a very good demonstration of Heisenberg's Uncertainty Principle.

Consequently, we were rather pleased with this phase-locked loop based design which got round the problem.

This tacho features a fast response time, coupled with 10 Hz resolution, through the use of a phase locked loop frequency multiplier. It can be set up, by means of a single link, to work on 4, 6 or 8 cylinder motors.

DESIGN FEATURES

To measure the revolutions per minute of a motor is simply a matter of counting the number of ignition pulses over a given time. With a four cylinder, four stroke motor there is such a pulse twice per revolution. Therefore if we count these pulses for 30 seconds we will have revs/min with a one cycle resolution. Obviously this is much too long a sample period for practical use in a car and some compromise has to be made. The usual solution is to use a 100 rev resolution and a sample time of 0.3 seconds (on 4 cylinders). We considered this inadequate which is why we have not published a design until now.

In this design an oscillator is used which is phase locked to the ignition pulses except at a higher frequency (x8 for 4 cylinder) allowing a short sample time (0.375 sec) with a 10 rev resolution. By using a different multiplication factor compensation for different numbers of cylinders can be made. Unfortunately with the multiplication factors used (x8, x6, x4) the sample time for 6 cylinders is not exactly the same as that used for 4 and 8 cylinder motors. Altering the ratios to x12, x8 and x6 would enable a 0.25 sample time to be used for all ranges, but this is not possible with the divider IC utilised in this design.

CONSTRUCTION

Assemble the pc board with the aid of the overlay ensuring the components are oriented correctly. The tantalum capacitors normally have a + mark indicating the positive load, or a dot on the side. When soldering the CMOS ICs (4, 6, 7) earth the tip of the soldering iron.

Note that there is one feedthrough or link between the two sides of the board near C10.

CALIBRATION

Initially place a link between the point 'C' and the terminal corresponding to the number of cylinders. Now with the power supply connected feed a 50 Hz signal of between 12 and 30 V into the points input using the 0 V as common. Now adjust RV1 until the display reads 1500 RPM for 4 cylinders, 1000 for 6 or 750 for an eight cylinder car.

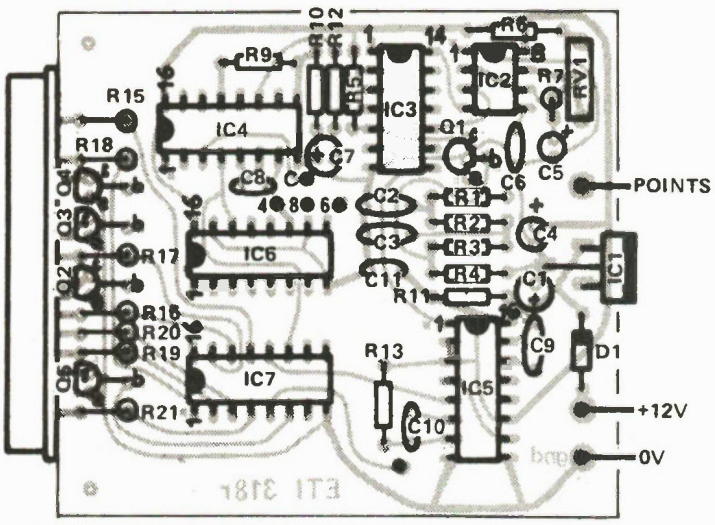

Fig. 1. The component overlay for the board. The board is double sided although only the lower surface is shown here. Note the link between the two surfaces of the board near C10. Also check the orientation of the transistors carefully.

SPECIFICATIONS

Range	100 to 9990 RPM
Resolution	10 RPM
Reading rate	
4 or 8 cylinders	2.66 per second
6 cylinders	3 per second
Power supply	7 to 15 V @ 400 mA
Suitable ignition systems	standard CDI transistor assisted * it will not operate on 'pointless' systems

PARTS LIST

RESISTORS all ¼W 5% unless stated otherwise

R1,2	39k
R3,4	22k
R5	1k5
R6	100k
R7	100R
R8	not used
R9	10k
R10	390k
R11	10k
R12	270k
R13	10k
R14	not used
R15–R21	27R

POTENTIOMETER

RV1	25k trim

CAPACITORS

C1	10µ 25V tantalum
C2,3	56n polyester
C4	10µ 25V tantalum
C5	4µ7 25V tantalum
C6	10n polyester
C7	1µ0 25V tantalum
C8	470p ceramic
C9	56n polyester
C10	10n polyester
C11	10n ceramic

SEMICONDUCTORS

IC1	7805 regulator
IC2	555 timer
IC3	7413 dual schmitt
IC4	4046 PLL
IC5	74123 dual mono
IC6	4018 divide by n
IC7	74C925 4 digit counter
Q1	MPS6515
Q2–Q5	2N2222A
D1	1N4004
Display	NSB5881 (National)

MISCELLANEOUS

PC board ETI 318
Case to suit

Northern Bear Electronics will have available a kit of parts only for this project, while the pcb may be obtained from B&R Electronics.

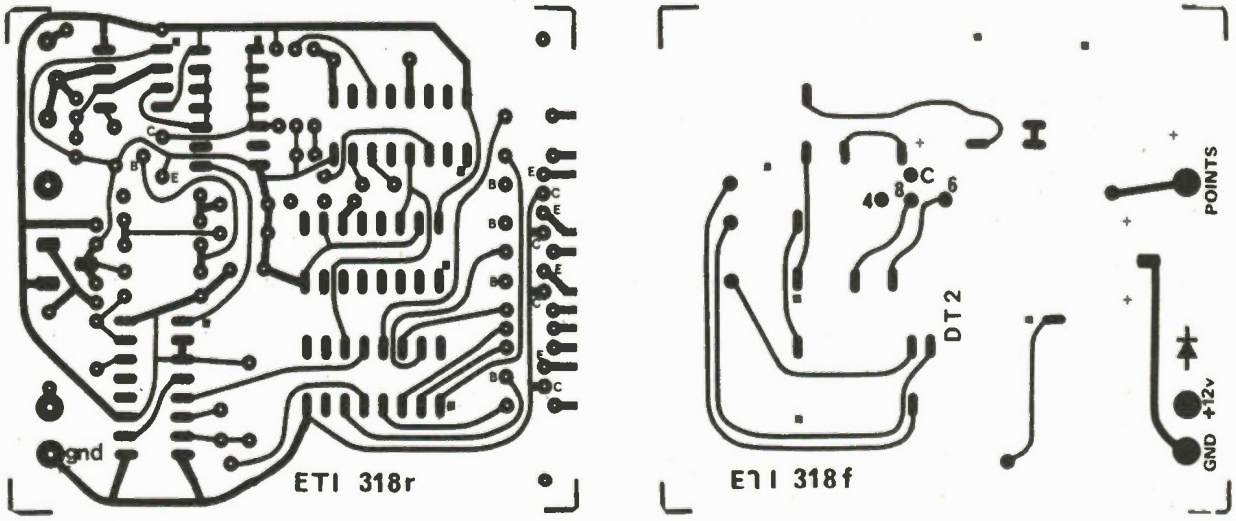

Fig. 2. The pc patterns shown full size. The second side can be printed, or simply a guide for jumper wires.

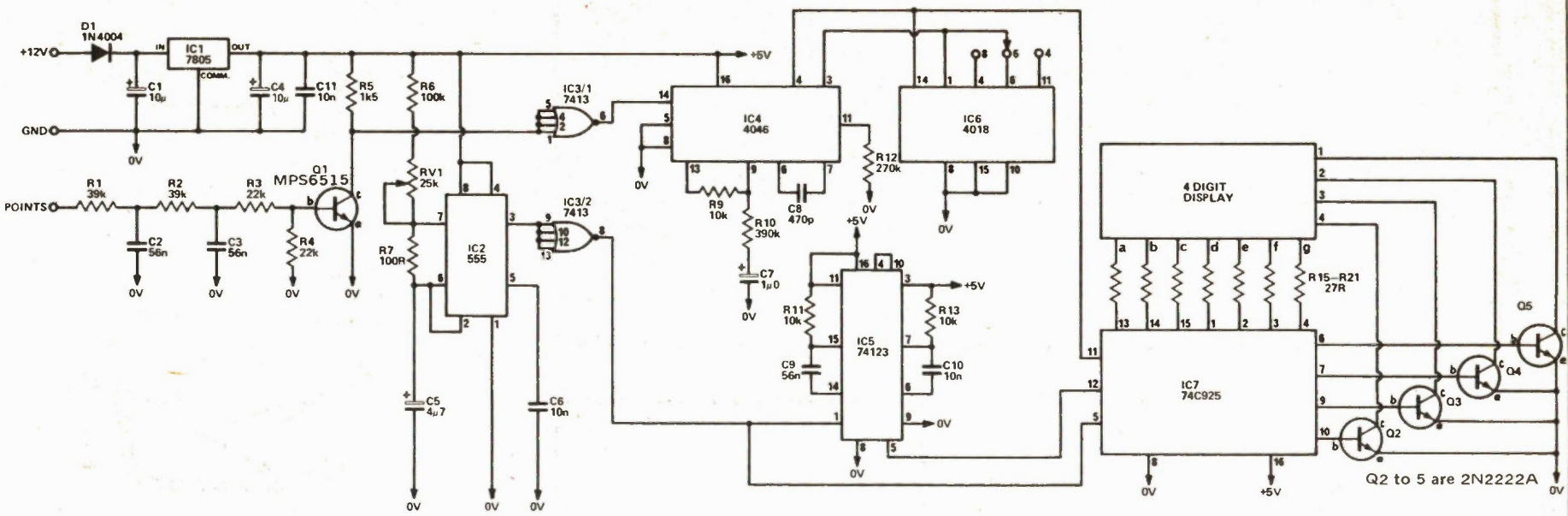

Fig. 3. The circuit diagram of the digital tacho.

HOW IT WORKS

The output from the points of the distributor is basically a 0 to 12V square wave with a 200 volt pulse on the rising edge. A filter network, R1-R4, C2, 3 is used to remove the high voltage pulse (and points bounce) and Q1 buffers it giving a +5 to 0V output or its collector. As the filter network removes the sharp edge of the input a schmitt trigger is needed on the output of Q1 to give fast edges. IC3/1 is used for this.

The output of IC3/1 is connected to the input of the phase-locked loop IC (4046). This IC has an internal voltage controlled oscillator and its output is divided by 4, 6 or 8 by IC6 and this lower frequency is fed back to the phase-locked loop IC. The IC then compares this frequency to that at its input and adjusts the internal oscillator until it is the same. The result is a frequency which is an exact multiple of the input.

The time base is generated by IC2 (555) which has a negative output pulse, about 300 µs wide every 375 ms (or 333 ms for 6 cylinder). This is inverted by IC3/2 and is used as the strobe pulse for the 4 digit counter IC7. This pulse also triggers the first of the monostables in IC5 which gives a 200 µs delay before triggering the second half of IC5; this gives a 40 µs pulse to reset IC7 back to zero.

IC7 is a 4 digit counter with a latch (store) and seven segment decoder driver. It needs four external transistors to drive the digits but the segment drivers are internal. As we need only a three digit counter, i.e. for a 10 Hz resolution, with the right hand permanently zero the least significant digit is connected to the second right digit, etc., with the most significant digit connected to the right hand digit. Provided one does not exceed 9990 RPM this digit will remain on 0 as intended!

The 555 timer, the TTL and the 74C925 needs a regulated +5V and IC1 provides this with D1 preventing damage which might be caused by reverse polarity input.

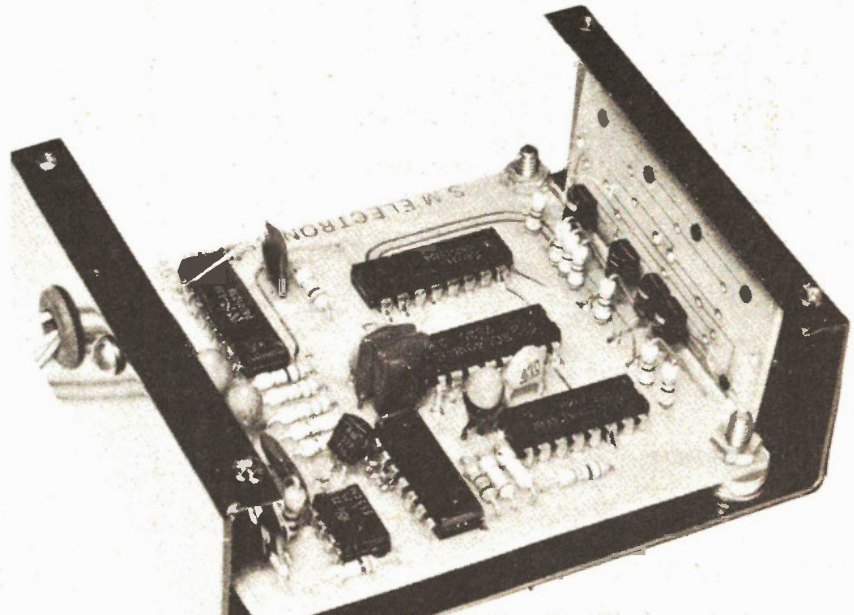

Log-Exponential Converter

This converter can be set up for either logarithmic or exponential operation and incorporates a neat heater circuit for temperature stability.

IN THE CONVENTIONAL musical scale, consecutive notes are not separated by the same frequency, but by the same ratio – the twelfth root of two. This is quite acceptable for most musical instrument manufacturers, except that in electronic music equipment it is easier to make oscillators which have an accurately linear frequency/control voltage characteristic. The keyboards of most music synthesizers give an output voltage of 1 V for each octave on the keyboard. This can easily be generated by a set of equal resistors between the contacts on each key and a voltage applied to each end (normally 5 V). However this means the oscillator is required to have an exponential frequency/control voltage response.

This is where the trouble usually starts. An exponential converter is normally used which relies for its operation on the relationship between current and voltage in a silicon diode or transistor. However unless temperature stabilisation is used the oscillator will not stay in tune for very long. With this unit the transistor used is heated to around 55°C and stabilised at this temperature, eliminating the problem of thermal drift.

In the instrumentation field a lot of functions are displayed in dBs which are a logarithmic measurement. As this unit can be connected in either exp or log modes it is useful for this purpose also.

CONSTRUCTION

As the unit will normally be used with some other equipment, we have not described any mechanical housing. The only difference between the assembly of this board and any other is the oven and the connections to the transistor array package. The oven is made out of two pieces of foam plastic about 55 x 35 x 12 mm. The outside of the oven should be covered with aluminium foil to help reduce heat loss. The aluminium itself should be covered with a layer of adhesive tape where the leads can touch. A piece of thick paper should be used between the oven and the pcb to insulate the tracks.

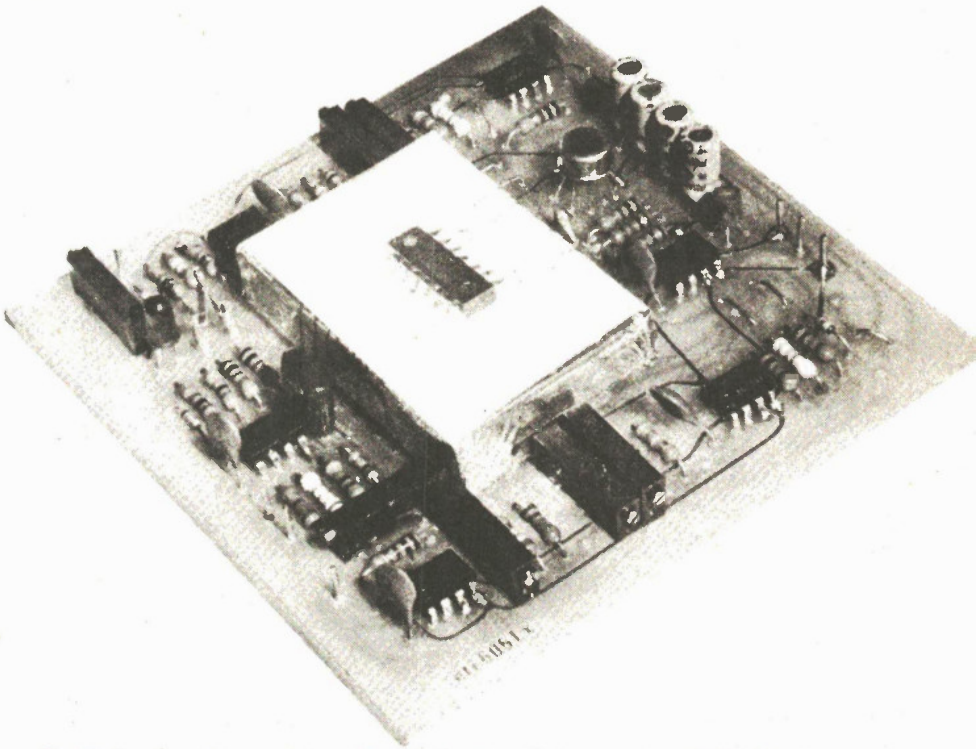

Photo showing the complete unit with the top of the oven removed to show IC5. Note that link 1 is made out of a couple of pins from an old tube socket.

The centre of the oven should be hollowed slightly to hold the IC (bend the leads out straight as shown in the photo); a hot soldering iron is the easiest method. Do not remove more than necessary. Now solder a 40 mm length of thin copper wire (a single strand of a multistrand cable is best) to each pin, then with the base of the oven in position, sit the IC in the oven and connect the leads to the appropriate holes. If a small amount of epoxy cement is placed under the oven it will stay in position. Now fit the top of the oven and secure with a piece of adhesive tape until it has been checked out. It finally can be cemented with epoxy adhesive.

The potentiometer values chosen are a compromise between ease of adjustment and the ability to compensate different transistors. If the potentiometer does not have enough range then the series resistor will have to be varied. We have specified 2% resistors throughout to obtain a better temperature coefficient than is possible with conventional 5% resistors. It will not help to select out of normal 5% types.

SPECIFICATIONS

Transfer functions	
exponential	V out = 0.15625×2^{Vin}
log.	V out = Ln(Vin/0.15625) / Ln2
Useful dynamic range	50dB or 8octaves
Oven temperature	approx. 55° C
Warm up time	about 2 minutes
Power supply	±10 to ±15 volts

HOW IT WORKS

This unit relies on the fact that the collector current of a transistor is exponentially related to the base voltage.

In the log mode the collector of the transistor is linked back to the input of IC1. In this way the collector current is proportional to the input voltage and therefore the voltage on its emitter is logarithmically related to the input voltage. This voltage is then amplified and level shifted by IC3 to give the desired output.

In the exponential mode the 10k resistor R9 is linked back to the input of IC1 and the voltage on the emitter of the transistor is proportional to the input voltage; the collector current is exponentially related to the input voltage. This current is converted to a voltage by IC3.

All this works well provided the transistor is at a constant temperature. Compensation can be made by using other junctions and thermistors, however even the self-heating effect of the transistors can affect linearity. The transistors we have used are part of a transistor array IC which has three individual NPN transistors and a differential pair. We heat the chip up by dissipating heat in the differential pair while measuring the base-emitter voltage of one of the individual transistors. IC8 is used to compare this voltage to one set by the divider R25, 26, 27 and RV7. The base-emitter voltage is normally about 0.67 V at 20°C and drops about 2.2 mV per degree above this temperature. IC8 then stabilises the chip temperature to about 35°C above the temperature at which it was initially calibrated. As it warms up the current in the transistors will fall and when hot the voltage drop across R31 will be low enough that the LED will extinguish. The transistor array is housed in a polystyrene housing to conserve heat.

VALUES OF UNMARKED COMPONENTS		
	LOG	EXPONENTIAL
R3	33k	390k
R5	"	150k
R13	"	100k
R15	22k	470k
R17	390k	33k
RV3E	LINK	200k
RV3L	200k	LINK
LINKS REQUIRED		
	A–B D–C	A–D B–C

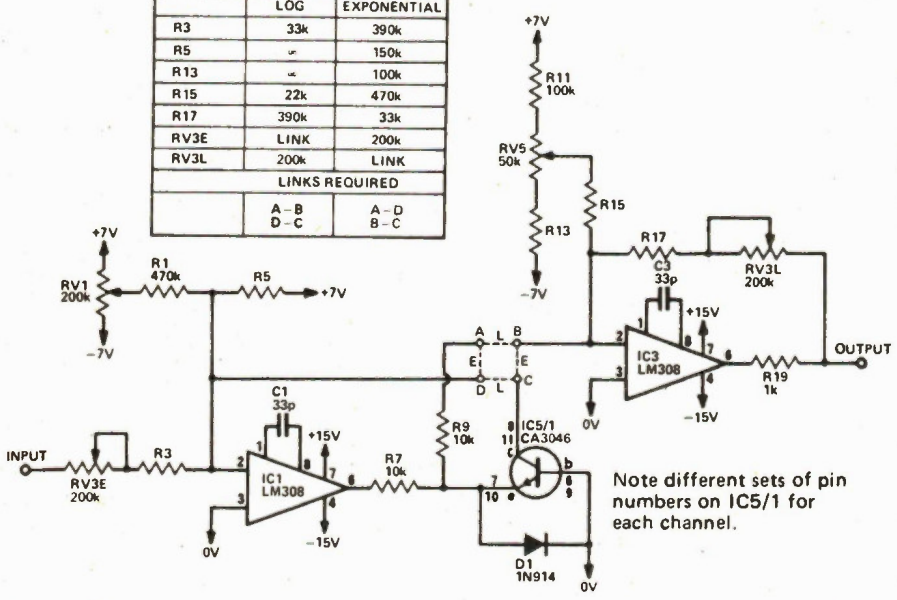

Fig. 1a. The circuit diagram of the converter section. Note that although only one channel is shown here that there are two identical units on the pcb. The component numbers used on the second channel are the missing even numbers, ie R12 is the same as R11

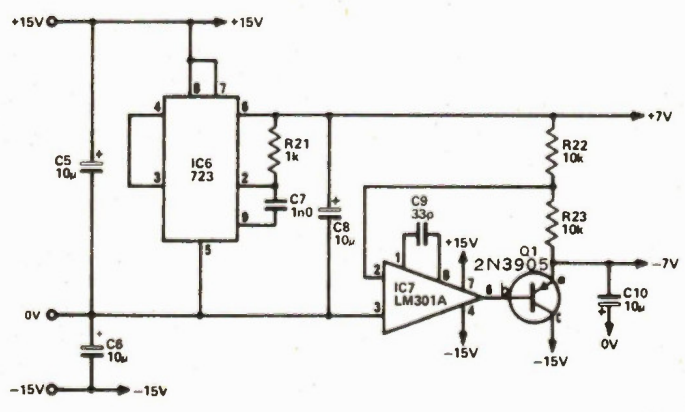

Fig. 1b. The power supply section which supplies the stable ∓ 7volts needed for the bias and adjustment controls.

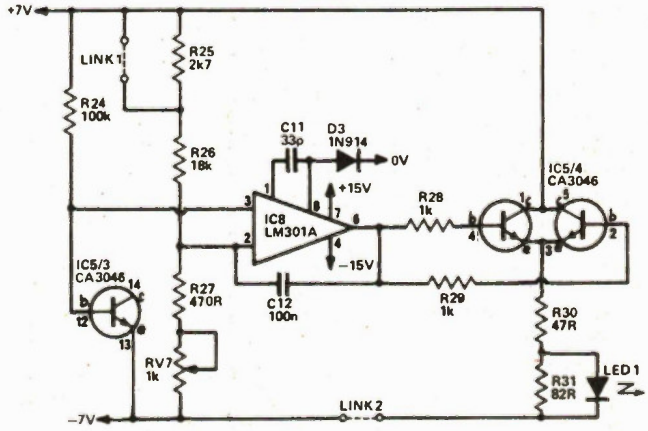

Fig. 1c. The oven circuitry.

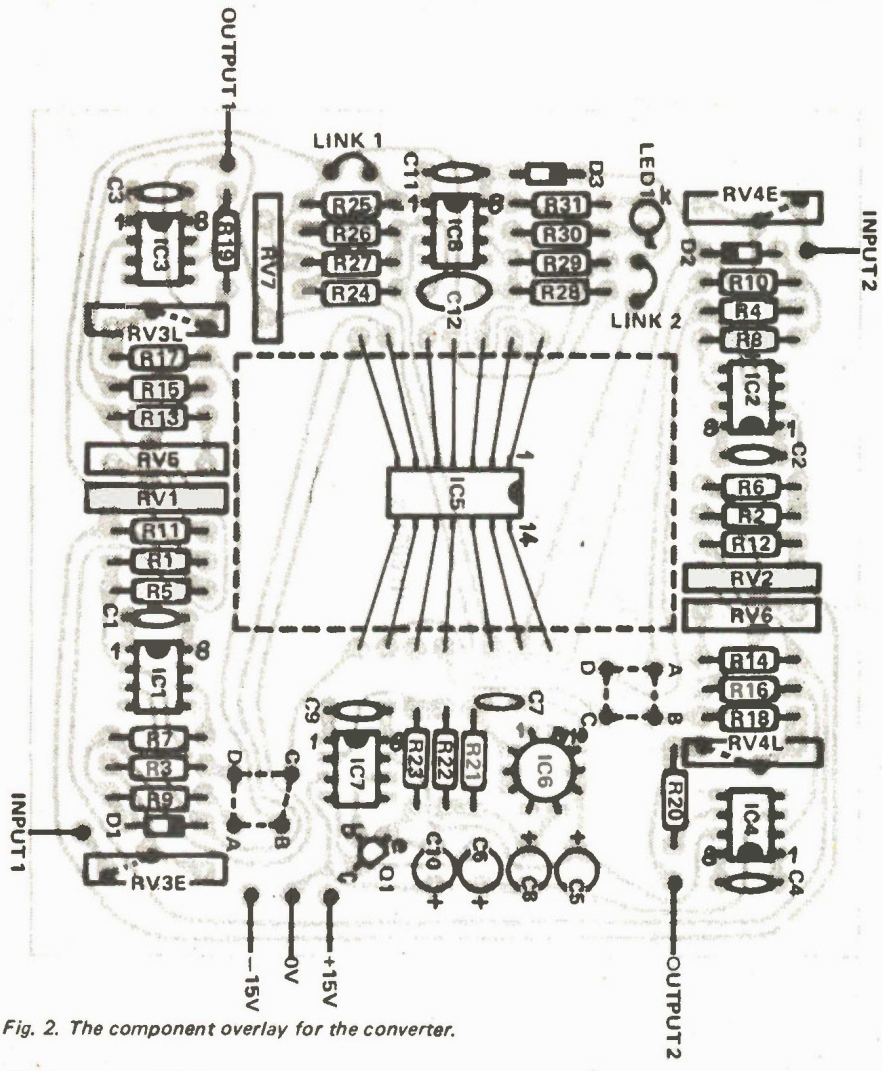

Fig. 2. The component overlay for the converter.

PARTS LIST

RESISTORS — all 2%, 5W
- R1, 2 . . . . . 470k
- R3–R6. . . . . see table 1
- R7–R10 . . . . 10k
- R11, 12 . . . . 100k
- R13–R18 . . . see text
- R19–R21 . . . 1k
- R22, 23 . . . . 10k
- R24. . . . . 100k
- R25. . . . . 2k7
- R26. . . . . 18k
- R27. . . . . 470R
- R28, 29 . . . . 1k
- R30. . . . . 47R
- R31. . . . . 82R

POTENTIOMETERS
- RV1–RV4. . . 200k multiturn trim
- RV5, 6 . . . . . 50k multiturn trim
- RV7 . . . . . 1k multiturn trim

CAPACITORS
- C1–C4 . . . . . 33p ceramic
- C5, 6 . . . . . 10µ 25V electro
- C7. . . . . 1n0 polyester
- C8. . . . . 10µ 25V electro
- C9. . . . . 33p ceramic
- C10 . . . . . 10µ 25V electro
- C11 . . . . . 33p ceramic
- C12 . . . . . 100n polyester

SEMICONDUCTORS
- IC1–IC4 . . . . LM308
- IC5 . . . . . CA3046
- IC6 723
- IC7, 8. . . . . LM301A
- Q1 . . . . . 2N3905
- D1-D3 . . . . . 1N914
- LED

MISCELLANEOUS
- PC board ETI 605
- Polystyrene foam for oven

The pcb for this project is available from B&R Electronics and Spectrum Electronics.

CALIBRATION

The equipment needed comprises an accurate digital voltmeter and a variable power supply with a fine voltage control. The +7 V rail can be used for this with a multi-turn potentiometer.

Oven Control

1. Before switching on, remove link 2 and fit link 1.
2. Switch on and monitor the voltage on the output of IC8 (pin 6).
3. Adjust RV7 until the voltage is about −5 V. The potentiometer is sensitive in this area but the actual voltage is not critical.
4. Remove link 1 and fit link 2. The LED should now come on for about two minutes before slowly going out. This indicates that the oven is stable.

Calibration of Log Mode

1. Set 0 V on the input.
2. Monitor the voltage on the junction of R7 and R9.
3. Adjust RV1 to give a negative voltage on this point. Now adjust RV1 slowly until the voltage just switches positive.
4. Set 0.15625 V on the input.
5. Adjust RV5 to give 0 V output.
6. Set 5.00 V on the input.
7. Adjust RV3 to give 5.00 V output.
8. Set 1.25 V on the input and check the output voltage. It should be 3.00 V. If it is higher go back to step 4 except adjust RV5 to give −0.010 V and use RV1 to bring it back to zero. Continue with step 6, 7 and 8. If the output voltage at 1.25 V input is less than 3.00 V adjust RV5 to give +0.010 V instead of −0.010 V.

Continue until all three points are correct.

Calibration of Exponential Mode

1. Place a link between the junction of R7 and R9, and 0 V.
2. Adjust RV5 to give 0.00 V output. Remove the link.
3. With 0.00 V input, adjust RV1 to give 0.15625 V output.
4. With 5.00 V input, adjust RV3E to give +5.00 volts output.
5. Check output voltage with 3.00 V input. It should be 1.25 V.
6. If high repeat steps 1 – 5 except adjust RV5 to give about +10 mV output. If low, repeat steps 1 – 5 except adjust RV5 to give about −10 mV output.
7. Continue adjustment until all readings are correct.

CALIBRATION TABLE

A	B
−3.00 V	19.5 mV
−2.00 V	39 mV
−1.00 V	78 mV
0.00 V	156 mV
+1.00 V	312 mV
+2.00 V	625 mV
+3.00 V	1.25 V
+4.00 V	2.50 V
+5.00 V	5.00 V
+6.00 V	10.00 V

Fig. 3. This table shows the relationship between the input and output. In the exponential mode A is the input with B the output while in the log mode B is the input and A the output.

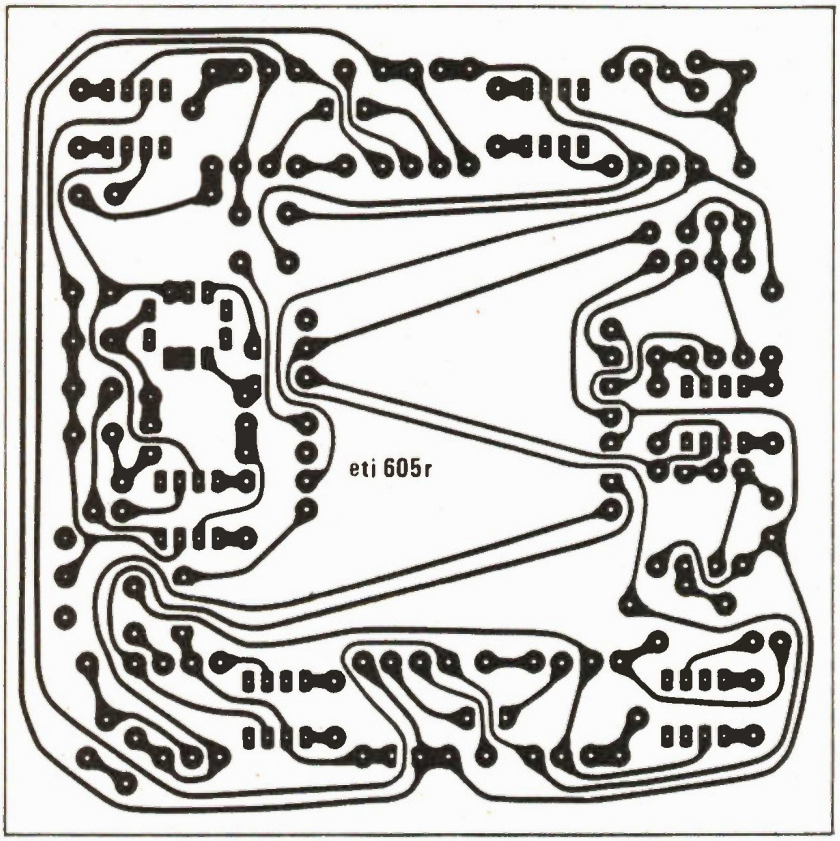

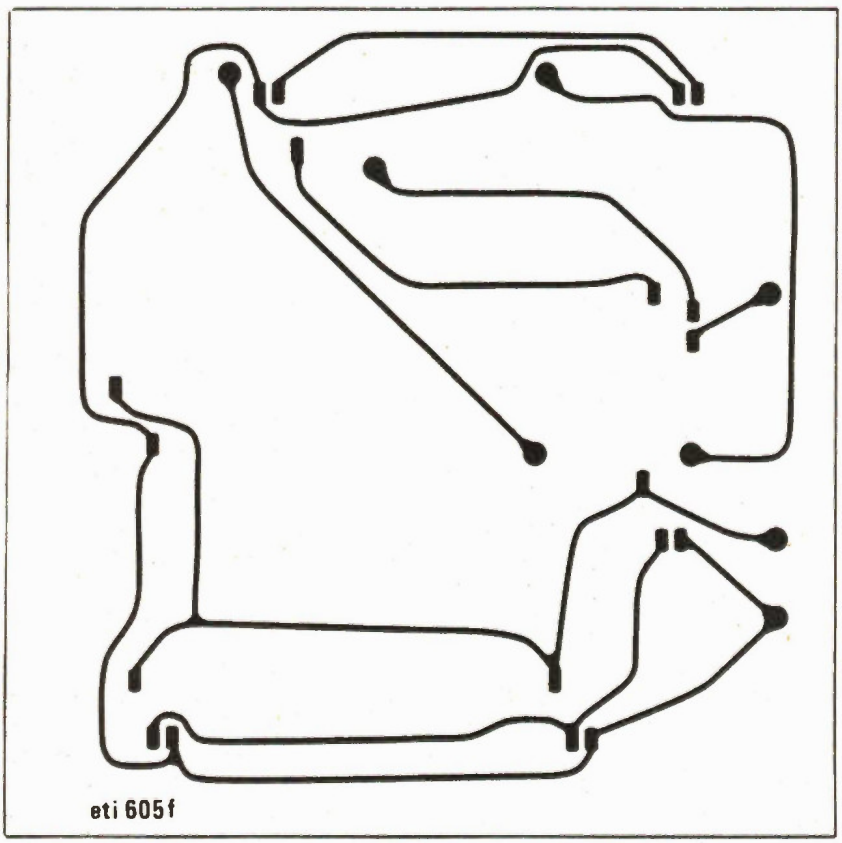

MORE ELECTRONICS IN MODEL RAILWAYS

Follow up the article in la[illegible] month's ETI with mo[illegible] use in model rai[illegible] "Electronic [illegible] Railwa[illegible] 1976 by [illegible] was [illegible] as a pocket-[illegible]ook. Now we have [illegible] stock for our [illegible]dian readers. Local equivalents are given for transistors used. Canadian price $2.60 (inc p&p).

SOLD OUT!

Send order with cheque or Mastercharge/Chargex number (with expiry date and signature) to ETI Books, Unit Six, 25 Overlea Blvd., Toronto, M4H 1B1.

SAVE!

Repairs to Calculators
All Makes and Models

***HANDHELDS**
Non Rechargeable
Flat Rate @ 10.00

***HANDHELDS**
Non Scientific Rechargeable
Flat Rate @ 15.00

***HANDHELDS**
Scientific Flat Rate @ 25.00
Complete Overhaul
on all Handhelds

***DESKTOPS/PRINTERS**
Labour @ 25.00 Flat Rate
Parts Extra

- Free Estimates Available
- Maximum 1 week Service
- Add 2.50 to Above Prices For Handling & Mailing.
- 90 Day Warranty * Dealer Inquiries Invited

Ocean Electronics Ltd.
3992 Chesswood Drive
Downsview, Ontario M3J 2W6
Phone: (416) 630-0873

*LIGHT CHASER KIT Available $19.95
Ont. Res. add 7% Sales Tax

FM Wireless Transmitter

Compact unit lets you broadcast voice or music to local FM radios.

WITH THE NUMBER of inquiries we've had for FM Wireless Mikes and the like this project should prove very popular. It seems that no matter how short the distance there is something romantic about transmitting sound from place to place with no wires. But more than simply amusement, an FM Broadcaster can be quite a useful gadget, as a one way intercom, baby monitor, or perhaps you would like to listen to your phonograph while out in the backyard sunbathing with your FM Radio. (at this time of year? Hah!).

WHAT IT'S GOT

The FM Broadcaster presented here has two inputs, one for microphone, one for phono, each with its own level control. A five foot antenna wire attached completes the setup and gives you over 100 foot range. The frequency is adjustable to a blank spot on the FM band.

HOW TO BUILD

The best approach is to use a printed circuit board, as the wiring in the RF department is fairly critical, ie: leads should be short and not able to move very far. When mounting all the components carefully check that all devices where polarity is important are stuck in the right way around. Note that the potentiometers may mount directly on the board.

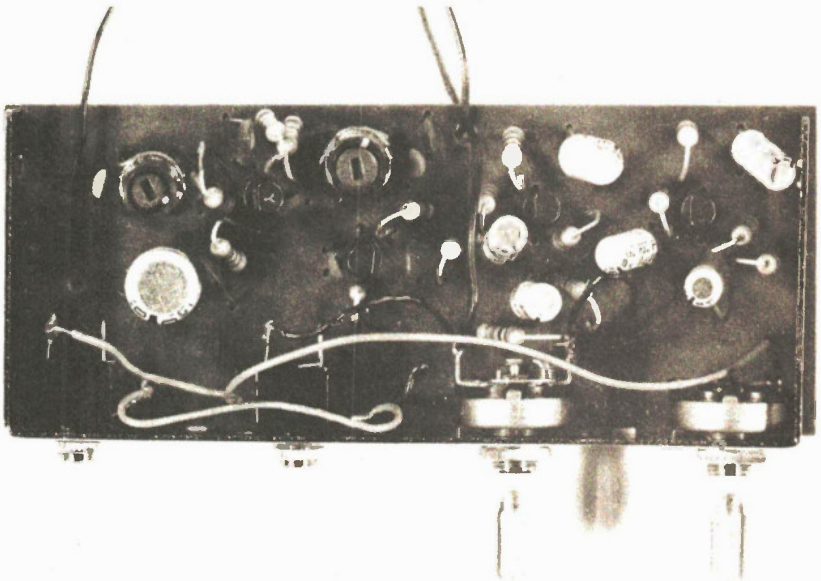

Printed circuit board pattern.

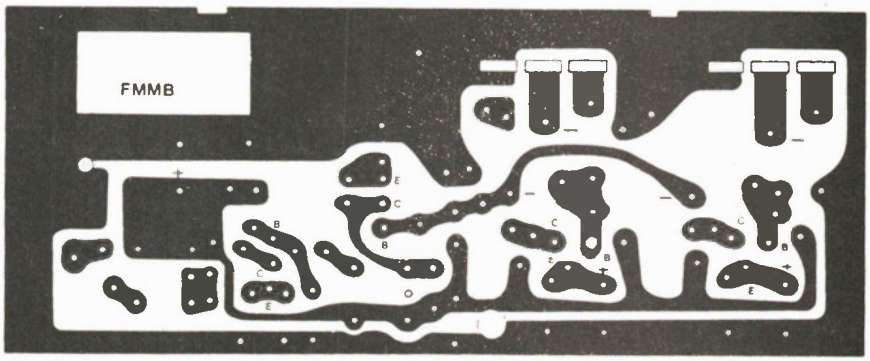

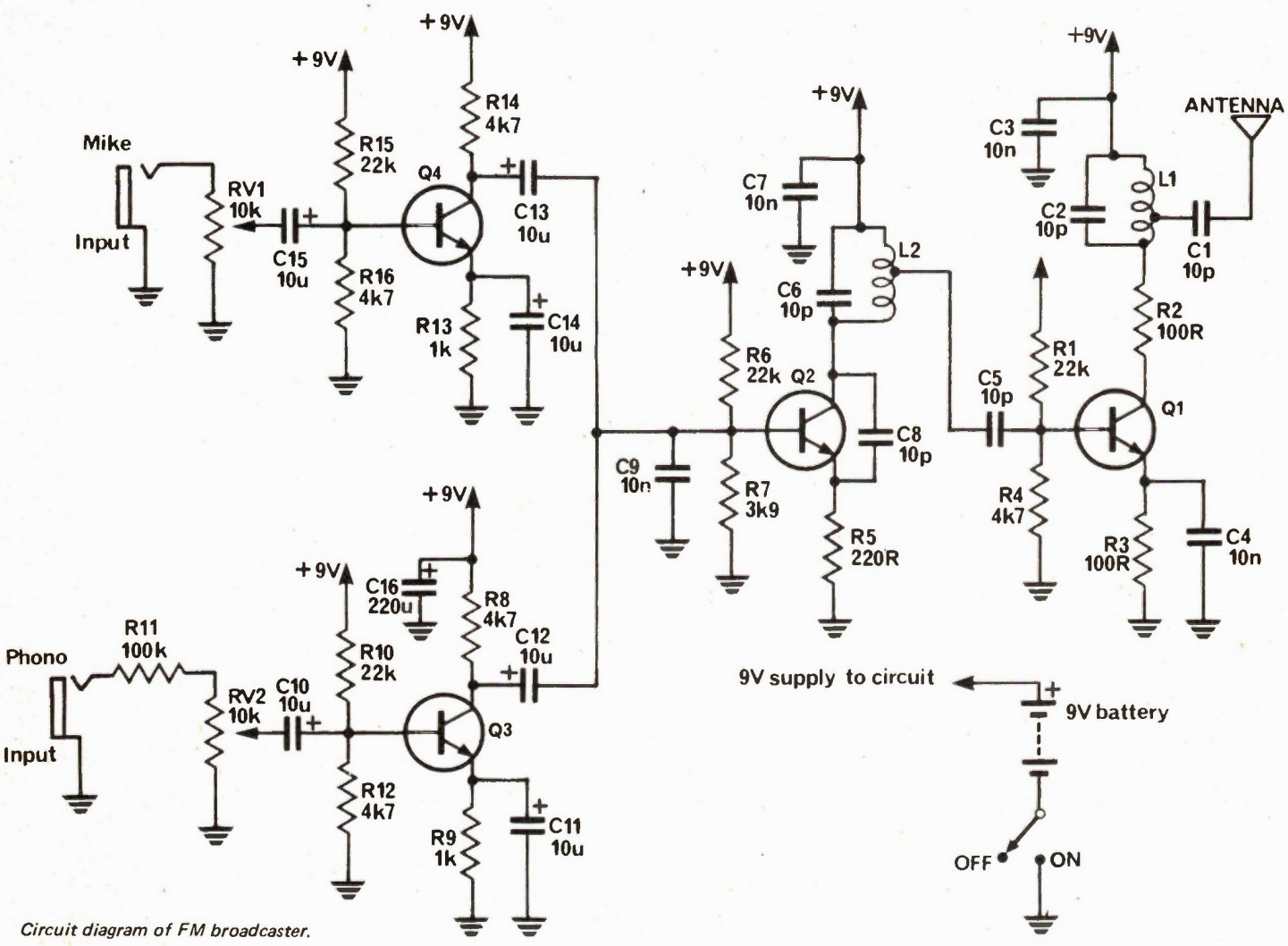

Circuit diagram of FM broadcaster.

HOW IT WORKS

The best place to start an explanation of how this circuit works is in the middle, with Q2. This transistor is the heart of the oscillator, of frequency in the FM band. R6 and R7 form a voltage divider which makes the base voltage on Q2 about 1.4V. The emitter of Q2 will be .7V less at .7V, establishing the current through Q2 (into collector, out of emitter) as .7V/R5, or 3.2mA. This also sets the gain of the transistor, which however will vary from device to device.

With no input to the base of Q2, the transistor will oscillate because of feedback through C8. What happens is that a small increase inthe voltage at the emitter of Q2, reduces the base-emitter voltage, reducing the current into the emitter, decreasing the voltage across the load (C6 and L2), which increases the voltage at the collector. Got that so far? The increase in collector voltage connected via C8 to the emitter causes the emitter voltage to rise, and we're back to the start. In other words, we have positive feedback and the transistor will oscillate. The basic frequency of oscillation is determined by C6 and L2, who form a tuned circuit which acts as a relatively low impedance at all frequencies, except for where $f=1/2\pi\sqrt{LC}$.

The next step is to modulate this basic RF signal, which is at say 100MHz. This is done by varying the voltage at the base of Q2 with the audio signal. What this does is to vary the current, through Q2 by a very small amount which also changes the gain a little. This causes Q2 to oscillate at a slightly different frequency. In otherwords, the frequency varies with the audio signal, hence frequency modulation.

The circuits around Q3 and Q4 are almost identical common emitter audio preamplifiers, taking input signals and increasing them to a suitable size to modulate the oscillator. The phono preamp has the addition of R11 which acts to attenuate the input signal from the phono.

At the output end of the unit, the RF signal from the top on L2 is fed to Q1 which simply amplifies the signal and finally it arrives at the antenna. L1 and C2 form a second tuned circuit so that Q1 tends to amplify the signal at the desired frequency only.

Three capacitors are shown connected essentially across the battery. Each is to ensure that the 9V supply at each location is nice and solid, ie that none of the various signals can influence the supply voltage. Hence, for the audio stages a single large electrolytic capacitor is used. A large capacitor should also do for the radio frequency stages. However, the electrolytic type of capacitor is not very good at frequencies that high, so two other type (such as ceramic or polystyrene) are used. Fortunately, at these frequencies a fairly small capacitor will suffice, hence the use of a couple of 10n capacitors, C3, and C7.

TESTING, TESTING ....

When first testing the unit, tune a nearby FM radio to an unused frequency somewhere in the lower third of the FM band. (If the set has a mute switch leave it off so you can hear noise initially). With a mike plugged in tune the Broadcaster slowly using L2, the oscillator coil. At some point a whistle should emanate from the radio. Increase the mike level control and test for transmitted audio by tapping or blowing on the mike.

Having verified operation of the unit, tune L1 for best signal. This is best done with a phono input.

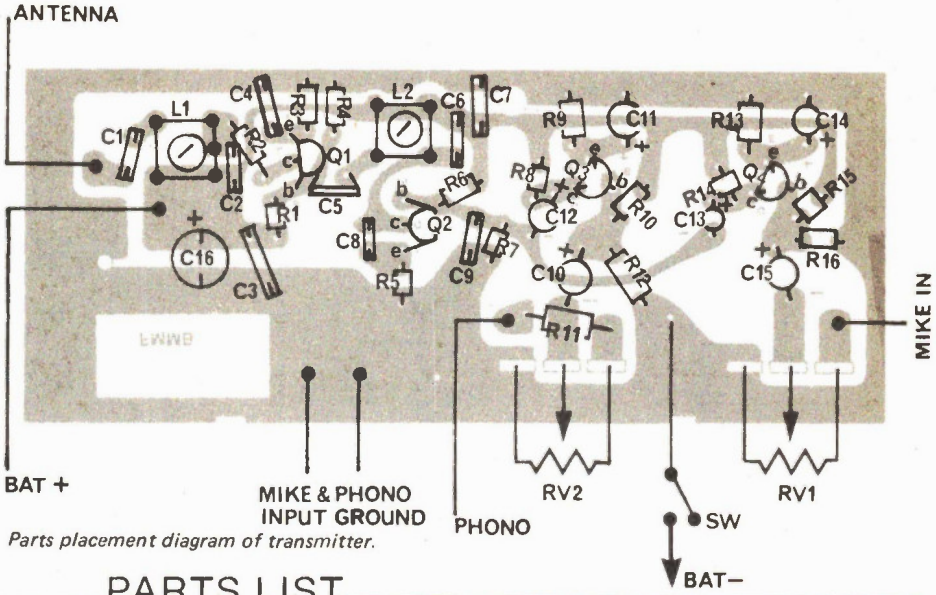

Parts placement diagram of transmitter.

PARTS LIST

RESISTORS all ¼W

R1, 6, 10, 15	22k
R2, 3	100R
R4,8,12,14,16	4k7
R5	220R
R7	3k9
R9,13	1k
R11	100k

POTENTIOMETERS

RV1, 2	10k audio (one may include switch SW)

CAPACITORS

C1,2,5,6,8	10p
C3,4,7,9	10n
C10,12,13,14,15	10u—10V
C11	47u—10V
C16	220u—10V

INDUCTORS

L1	29L1
L2	29L2

TRANSISTORS

Q1	2SC394, 2N3710
Q2	2SC380, 2N3710
Q3,4	MPS6515

MISCELLANEOUS

Printed circuit board, input sockets, battery snap, wire, etc.

Kits for this project, and the two coils separately are available from Jana. See their ad in this issue for details.

It's faster, easier and less expensive. That's why we call it Super-Strip.™

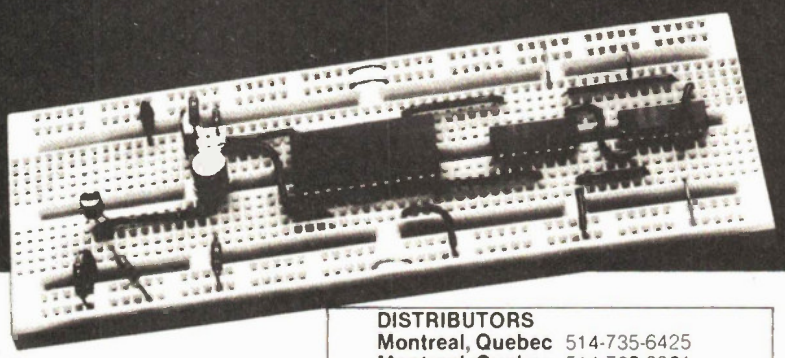

This versatile mini breadboard features the same superior contacts, materials and construction we use in our full-scale ACE All Circuit Evaluators.
Any solid hookup wire up to #20 plugs right in to connect DIPs, discretes and almost any components you have on hand. Super-Strip gives you 128 separate five-point terminals in the circuit building matrix and 8 power and signal distribution lines—enough capacity to build circuits with as many as nine 14-pin DIPS. And when you're done with your hookup, just pull it apart—everything's as good as new. Super-Strips come with your choice of nickel-silver or gold-plated terminals. Plus an instant-mount backing and quick-removal screws for fast and easy stacking or racking. Heard enough? Then stop looking and start cooking with A P Products Super-Strips.

DISTRIBUTORS
Montreal, Quebec 514-735-6425
Montreal, Quebec 514-769-8861
Quebec, Quebec 418-647-4422
Toronto, Ontario 416-484-9708
Downsview, Ontario 416-663-5563
Ottawa, Ontario 613-820-9471
Ottawa, Ontario 613-746-4413
Brantford, Ontario 519-756-2468
Vancouver, B.C. 604-324-0505
Vancouver, B.C. 604-324-6831
Victoria, B.C. 604-385-2411
Winnipeg, Manitoba 204-786-1471
Armdale, Nova Scotia 902-876-2920

Faster and Easier is what we're all about.

A P PRODUCTS INCORPORATED
Box 110 • 72 Corwin Drive
Painesville, OH 44077
(216) 354-2101 TWX: 810-425-2250

NON-SUBSCRIBERS START HERE

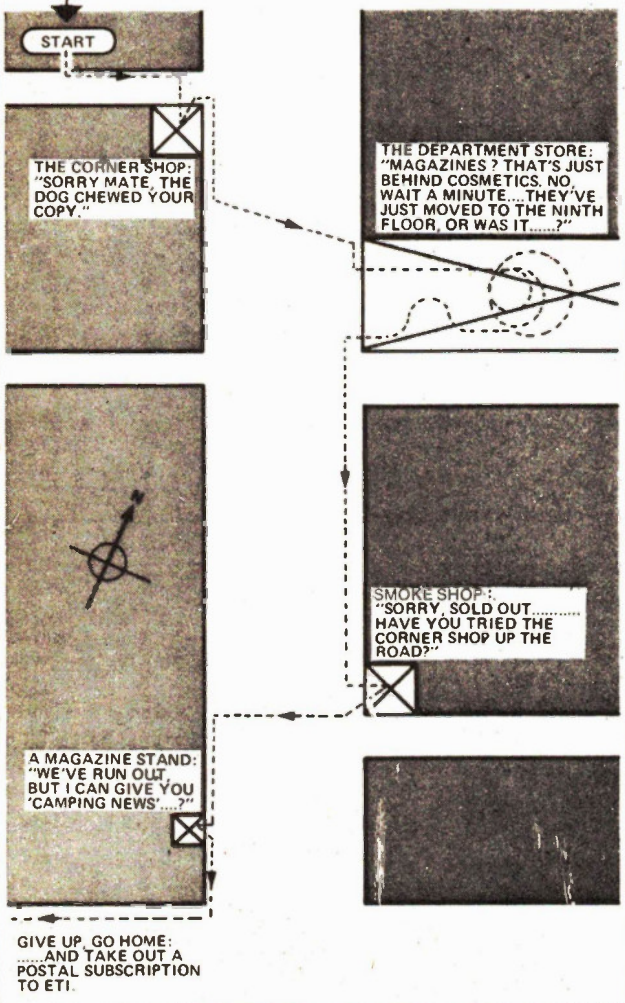

It can be a nuisance can't it, going from newsstand to newsstand? "Sorry buddy don't have it — next one should be out soon."

Although ETI is monthly, it's very rare to find it available after the first week.

Do yourself a favour. Place a regular order for ETI with a postal subscription, so there's nothing for you to remember — we'll do it for you.

For a subscription, send us $14.00 (12 issues) or $26.00 (24 issues). For US addresses the rates are $15.00 and $26.00 respectively. Do not send cash. Credit card orders give card name and number, exiry date and signature. Allow six to eight weeks for first issue.

Send to ETI Subs Dept, Unit 6, 25 Overlea Blvd., TORONTO, Ontario M4H 1B .

For overseas add $5.00 per year to Canadian rates.

Original Japanese Transistors & Integrated Circuits

Partial list only write for complete FREE catalogue.

2SA202	.50	2SB473	1.30	2SC1307	3.99	LA4030p	2.40	CB CRYSTALS	
2SA223	.63	2SB474	1.10	2SC1308k	4.95	LA4032p	2.60	$2.50 each*	
2SA495	.55	2SB492	.99	2SC1383	.63	LA4100	2.85	10.140	MHz
2SA496	1.10	2SB507	1.95	2SC1507	1.20	LM377N	3.95	10.160	MHz
2SA509	.80	2SB511	1.25	2SC1567	.95	LM1307N	3.90	10.170	MHz
2SA564	.50	2SB514	1.65	2SC2028	1.27	MA6301	3.50	10.180	MHz
2SA634	.85	2SB544	.75	2SC2029	2.65	MM5316	7.95	10.595	MHz
2SA643	.65	2SC372	.45	2SD72	.69	MM5387	7.95	10.615	MHz
2SA666	.65	2SC460	.65	2SD141	1.40	PLL-02A	8.99	10.625	MHz
2SA683	.65	2SC496	1.10	2SD234	1.40	STK-015	5.20	10.635	MHz
2SA699A	.95	2SC509	.75	2SD235	1.30	STK-020	5.30	11.730	MHz
2SA715	1.25	2SC515A	1.50	2SD261	.55	STK-433	8.95	11.275	MHz
2SA719	.55	2SC536	.45	2SD313	1.21	TA7120p	1.50	14.950	MHz
2SA733	.50	2SC710	.45			TA7203p	3.95	14.960	MHz
2SA794	.99	2SC711	.45	2SK19	.75	TA7204p	2.95	14.970	MHz
2SB33	.55	2SC756	2.50	2SK30	.75	TA7205p	2.95	14.990	MHz
2SB54	.55	2SC789	1.20	2SK41	.59	TBA810	3.95	23.290	MHz
2SB56	.55	2SC799	3.99	2SK44	.59	TBA820	2.95	23.340	MHz
2SB173	.45	2SC828	.45	AN214Q	2.75	UPC16c	2.65	23.390	MHz
2SB175	.55	2SC839	.45	AN274	2.36	UPC30c	2.75	23.440	MHz
2SB187	.49	2SC1014	1.25	BA511A	2.85	UPC1001H	2.95	23.490	MHz
2SB303	.50	2SC1018	1.90	BA521	2.95	UPC1020H	2.95	23.540	MHz
2SB337	1.95	2SC1030	2.95	HA1306	3.10	UPC1025H	2.95	37.600	MHz
2SB405	.55	2SC1096	.80	HA1339	3.25	UPC1154H	3.95	37.650	MHz
2SB407	1.80	2SC1173	.95	LA1201	1.95	UPC1156H	3.25	37.700	MHz
2SB411	2.99	2SC1226A	.89	LA3350	2.99	UPC575C2	2.25	37.750	MHz
2SB434	1.08	2SC1306	2.25			UPC592	1.95	37.800	MHz
						UPC555c	2.25	37.850	MHz

*Note: The CB CRYSTALS are solder in leads

MINIMUM ORDER $5.00
DEALERS: Volume discounts quoted on request

CANVOX LTD
8235 Mountain Sights, Rm 105
Montreal, Quebec H4P 2B4
(514) 735-5931

NEW!!

LIGHTS, TV AND APPLIANCES GO ON OR OFF AT YOUR COMMAND!

$12.95 2 for $22

Money-back Guarantee

Imagine the convenience of turning lights, TV and appliances on or off right from your easy chair, your bed or from anywhere in the room just like magic! This remarkable wireless remote control does it with the press of a button. Press it once to turn on TV, radio, lights, or any 110V appliance. . . press again to turn it off. Consists of two units: Sound Transmitter and Sound Receiver. Simply plug the receiver unit into any 110V outlet, then plug appliance into the receiver. From then on you can control on or off with the press of a button, no matter where you are in the room. Wireless transmitter unit fits in the palm of your hand—goes where you go. No batteries or wires—nothing to install. One set will operate only one applicance at a time—two sets will operate two appliances, etc. Completely safe and harmless, will not affect TV or radio reception. Just sit back, relax and enjoy the convenience of wireless on/off remote control!

SAVE $3.90 — Order 2 remote control sets for only $22 including postage and insurance.

CHARGEX(VISA) and MASTERCHARGE CREDIT CARD CUSTOMERS

Call (416) 366-9745

ELECTRONICS INTERNATIONAL
296 RICHMOND STREET W., TORONTO, ONTARIO M5V 1X2

VCTs: A Second Look

In the February 1977 issue of ETI Ron Harris reviewed the recent development of the Voltage-Current Transactor (VCT), which could be the most important device innovation of recent years for not only is the VCT expected to perform all the functions we now expect of the op-amp but to perform them either better or with fewer additional components. The earlier article briefly covered the VCT's development and its terminal properties, together with basic circuit applications. This article describes the VCT's internal functioning. It has been written for ETI by Dr. J. E. Morris.

THE CIRCUIT SYMBOL for the VCT is shown in Fig 1 along with the necessary bias supply and an external resistor R which determines terminal gain. The name "voltage-current transactor" is derived from the translation of differential input voltage into a proportional output current.

As with the conventional op-amp, the input impedance is made as high as possible to minimise loading of any practical source of input voltage. But the main difference between the VCT and an op-amp lies in the output port. As a current source rather than one of voltage, the port impedance is high rather than low. Furthermore, whereas the op-amp output signal is usually single-ended and referenced to ground, the VCT output is completely floating.

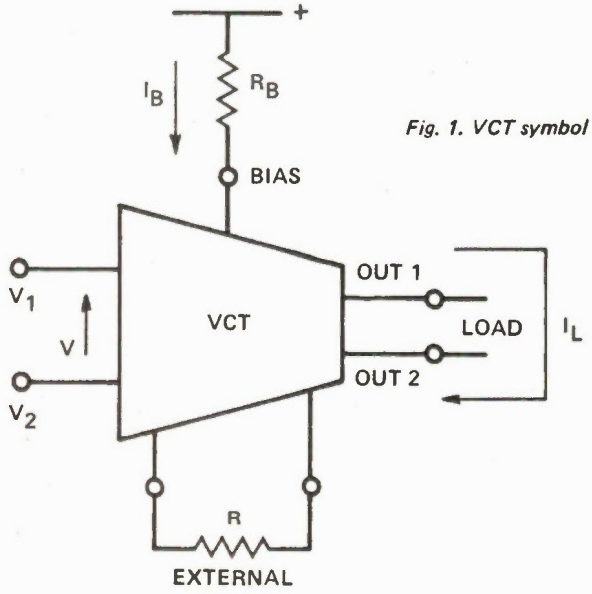

Fig. 1. VCT symbol and external connections.

The VCT is thus a true four terminal device and either terminal of either port may be used as a common point. It will also be apparent from Fig. 1. that there is no external feedback element involved in a simple amplification application.

The internal circuit is shown in Fig. 2. and as explained in this article there is no overall feedback concealed within the unit. With no feedback, there can be no feedback stability problems and thus a major headache of op-amp design vanishes.

VCT CIRCUIT

Modern IC's are generally very complex and involve many functional blocks. At first glance a circuit diagram often appears to have more relevance as a design for a maze than as a sensible means of serving these required electronic functions. The trick is to identify the functional blocks. Once their patterns are recognized, circuit operation may be deduced. For example it is obvious that the VCT is essentially symmetrical about the centre, so only one side need be considered in detail. And the input transistors (Q_1 Q_2 on side 1) clearly form a Darlington pair and may be regarded as a single composite transistor (Q_D say) in any simplified analysis.

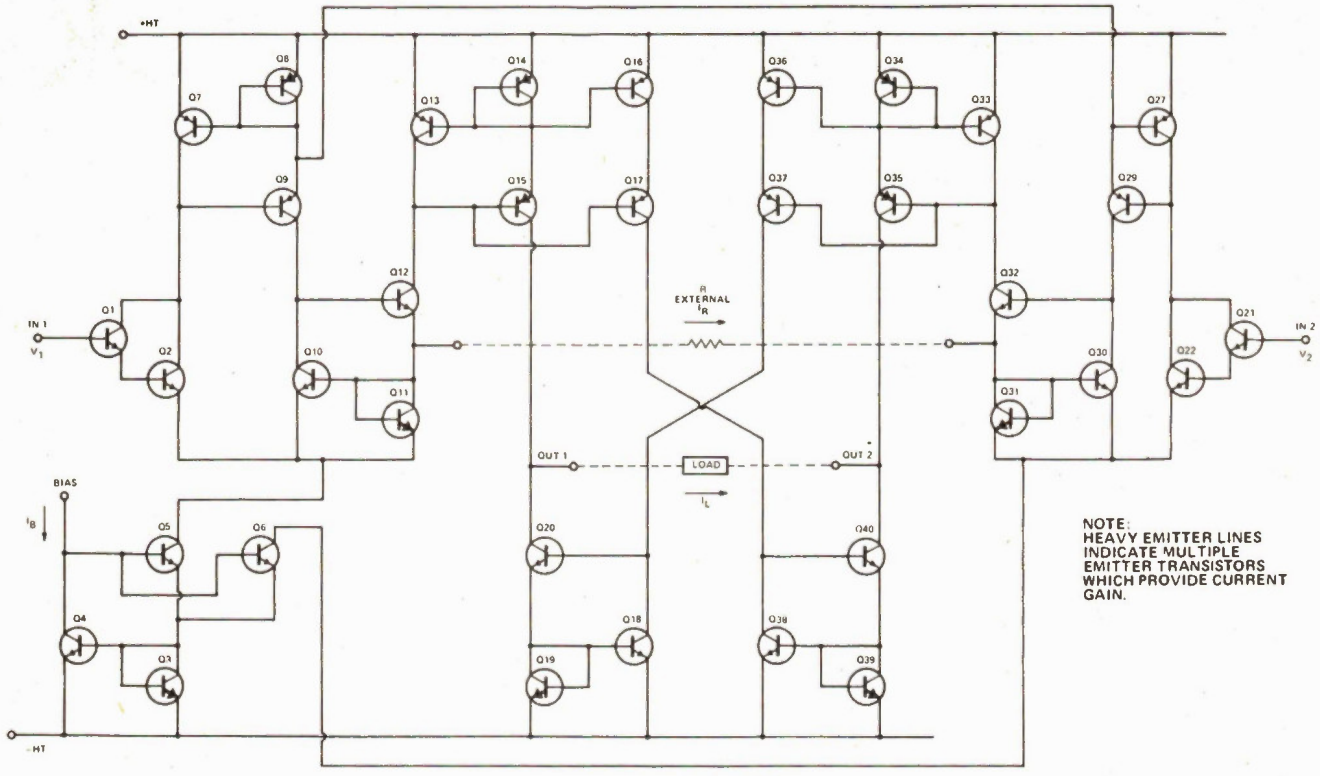

Fig 2. Simplified internal schematic of a practical VCT.

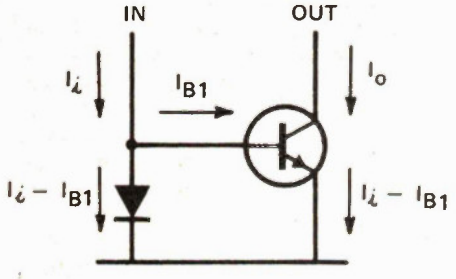

Fig. 3. Basic constant current source. I_o is fixed by injected current I_i.

The obvious solution to the impedance matching problem might appear to be the use of a common-base transistor stage which has low input impedance into the emitter and the same high output impedance from the collector as above. In an equivalent situation to Fig. 3 however, a PNP transistor is required and the sign of I_o is reversed. A minimum of three supply voltages would then be required instead of the two implied by Fig. 3.

Most of the functional blocks in the circuit are derived constant current sources and these will be briefly reviewed before seeing how they fit together to form the VCT.

IC CURRENT SOURCES

A) MARK I

The derived current source performs a similar impedance matching function with respect to currents that the emitter follower provides for voltages. A basic circuit commonly employed in ICs is shown in Fig. 3. where the essential requirement for operation is that the diode is matched to the B-E junction of the transistor. For a given diode voltage equal to the B-E voltage, identical currents must flow through the diode and the emitter junction. By inspection, $I_0 = I_i - 2I_{B1}$ in this case and $I_o \approx I_i$ provided transistor gain β is high. The input impedance is low and the output impedance is high to provide the current in/current out impedance matching required. In addition the input DC level (V_{BE}) is low and the output DC voltage (V_{CB}) will depend upon the nature of the load.

B) DIODES

The crux of the design in Fig. 3. is the matching of the diode to the B-E junction. One major feature of the modern IC is the close matching which may be achieved between adjacent transistors on a chip. Whereas the absolute values may vary quite considerably, and such variation occurs almost identically in nearby transistors. Tight thermal coupling also ensures that the characteristics remain matched independent of external temperature fluctuations and local Joule heating. The diode employed in the VCT is actually a normal transistor with the base shorted to the collector (see Fig. 4.) If this transistor is adjacent to the current source transistor and plysically identical to it, then the fact that V_{BE} is common to both ensures an identical emitter current in each (Fig 3.). To a first approximation only, the particular configuration also provides for a similar distribution of I_E between I_B and I_C. Truly identical transistors will not, however, possess identical current gains in the circuit due to the differences in V_{CB} (zero for the diode transistor).

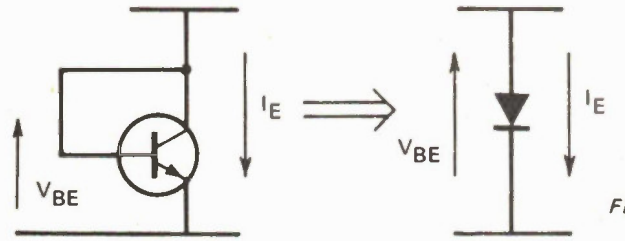

Fig. 4. IC diode format.

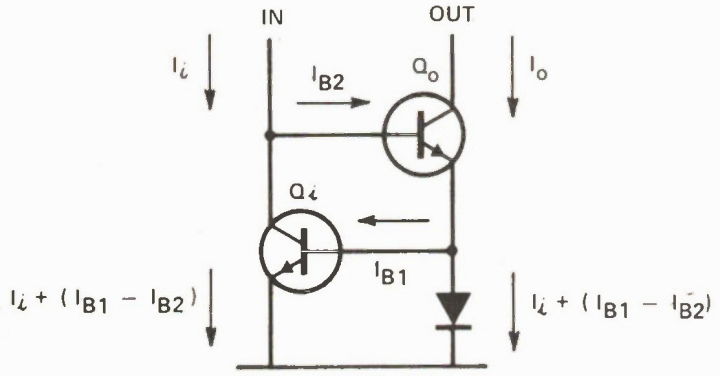

Fig. 5. Constant current source employed in the VCT.

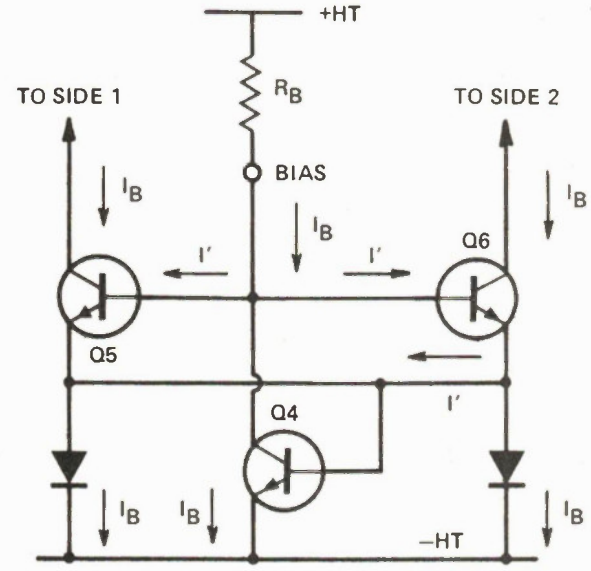

Fig. 6. Bias circuit as an example of the multiple-emitter diode.

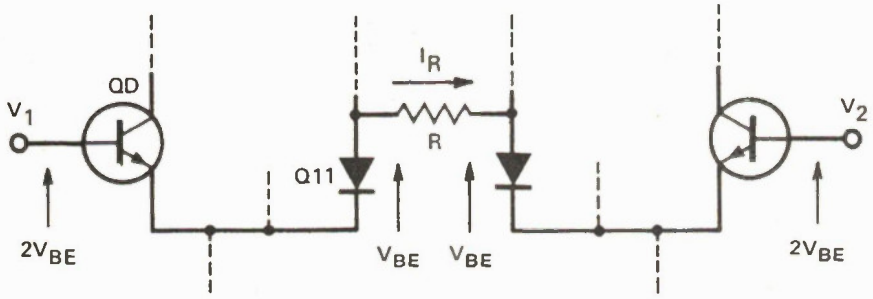

Fig. 7. Simplified view of the differential input circuit.

C) MARK II

The problem with the simple circuit of Fig. 3. is the requirement of high transistor gain. A partial solution is provided by the circuit of Fig. 5. which is the basis of all the functional blocks of the VCT. Here $I_o = I_i + 2(I_{B1} - I_{B2})$ and is made to closely approximate I_i by ensuring that $I_{B1} \approx I_{B2}$ rather than relying only on a large β. Note that the improvement is at the cost of an increased input impedance and DC input level ($V_{BEi} + V_{BEo}$). If $I_{B1} = I_{B2}$ exactly, β must be slightly greater for Q_o than for Q_i (which is reasonable since V_{CBo} will be greater than $V_{CBi} = V_{BEo}$).

Each of the functional blocks involves further modification of this circuit. These will each be described in turn.

D) MULTIPLE EMITTERS

The multiple emitter structure has been mentioned before. All it means is that the transistor emitter current is increased for a given V_{BE} by increasing the emitter area. In this way the multiple emitter, when used in the output side of a derived current source, can provide current gain. A current gain of two for each of the multiple emitter stages in the VCT leads to the prototype device specifications quoted by Harris and is assumed below.

BIAS CIRCUIT

The bias circuit has been redrawn in Fig. 6. where the multiple emitter transistor Q_3 has been split and is shown as two separate diodes. Current amplification leads to the defined bias current $I_B = (V_S - 2V_{BE})/R_B$ being drawn equally from each of the two sides of the VCT.

Note that while the total symmetry shown in the diagram implies that the introduction of a multiple emitter structure requires β_5, β_6 to be twice β_4, this conclusion is misleading. In fact one would be more likely to vary the multiple emitter area slightly off two, such that (i) all β's were approximately equal as before (ii) diode currents become $I_B + \frac{1}{2}I'$, and (iii) the base current of Q_4 reverts to $(\frac{1}{2}I') + (\frac{1}{2}I')$.

DIFFERENTIAL INPUT

It should be clear by now that the VCT relies upon defined current sourcing and multiple emitter current amplification to function. The input signal, however, is defined as a differential voltage ($V_1 - V_2$) and must be con-

verted to a proportional current. This is the purpose of the external resistor R as shown by the simplified view of Fig. 7. where I_R is clearly $(V_1 - V_2)/R$ provided symmetry is maintained. (Q_D is the Darlington combination Q_1 and Q_2,; Q11 functions as a diode.)

It will be seen shortly that the existence of a finite I_R upsets the symmetry – in fact this is how the circuit functions. So once again, our ideal is not quite possible since the diodes carry different currents at slightly different voltages. In fact $I_R \gtrsim (V_1 - V_2)/R$.

The next step is to see how I_R is converted to an output current.

INPUT CIRCUIT

The input section of one side of the VCT is redrawn in Fig. 8. Q_8 services both sides of the circuit and has been split in the diagram. Assume for the moment that some current I_X flows down through Q_7 and then the Darlington Q_D. The Q_7,Q_8,Q_9 current sourcing circuit requires I_X to also flow through Q_9 and Q_{10}. Similarly Q_{11} should draw $2I_X$ due to the double emitter. The total $4I_X$ must equal the bias current I_B and hence the currents are as shown with Q_{12} also carrying I_B. The principle of this input circuit is summarised for reinforcement in Fig. 9. which should be compared with Figs. 7 and 8.

It has already been stated that V_{CB} of the source output transistors will vary under operating conditions and due to resultant variations in β. In Q12 the base current IB12 (assuming constant β to first order) can no longer equal IB10. Current source operation must therefore deteriorate under operational conditions.

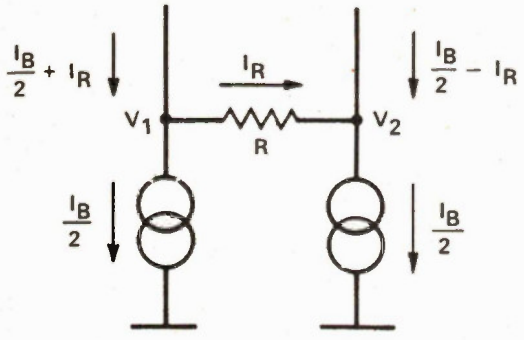

Fig. 9. Equivalent input circuit.

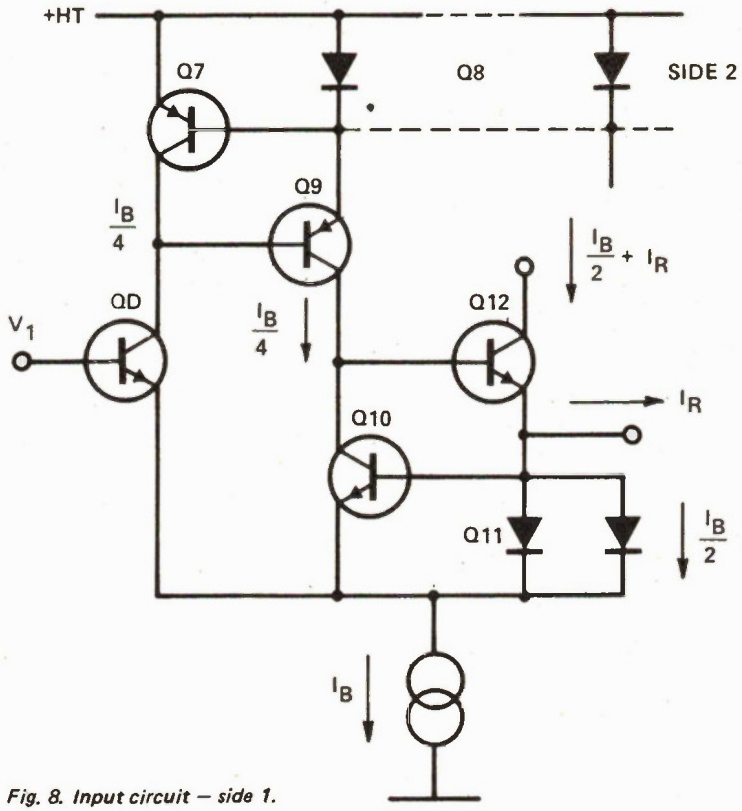

Fig. 8. Input circuit – side 1.

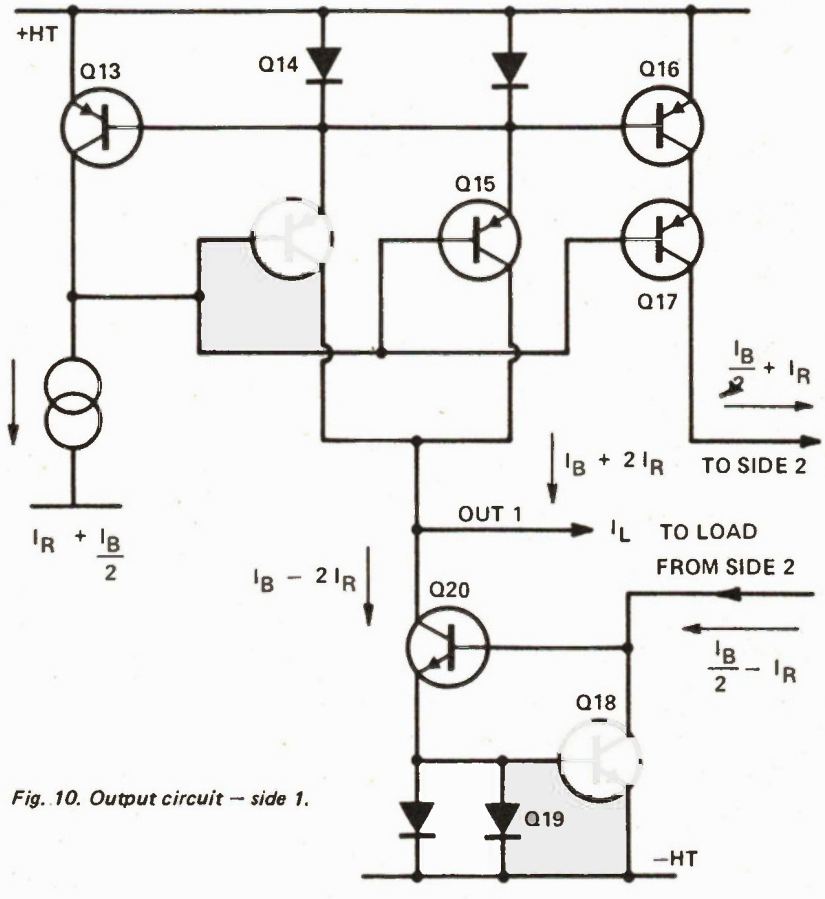

Fig. 10. Output circuit – side 1.

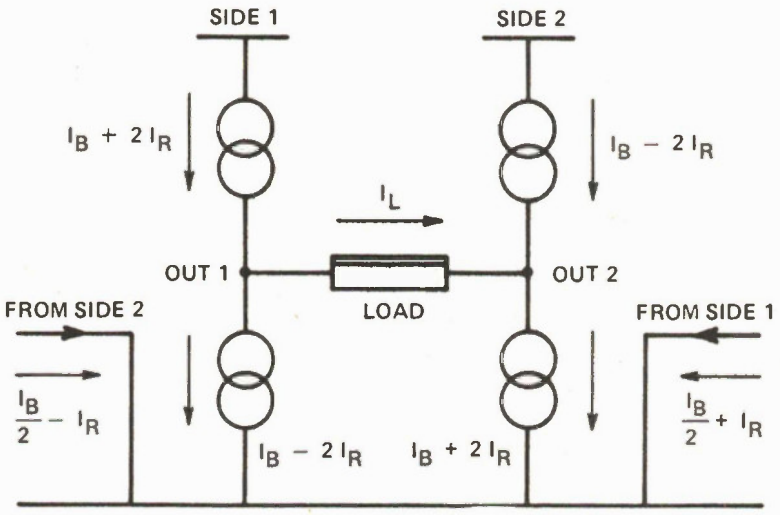

Fig. 11. Equivalent circuit of the differential current output.

OUTPUT CIRCUIT

The next step is to determine how the input signal current I_R is translated into a proportional floating output. Fig. 10 shows the remainder of side 1 of the VCT, designated as the output circuit. Clearly transistors Q_{18} to Q_{20} form a derived current source with gain equal to two. But it may be more difficult to see that Q_{13} forms part of two similar sources: with Q_{14}/Q_{15} to give a gain of two, and with Q_{16}/Q_{17} for unity gain.

So the current drawn by Q_{12} (Fig. 8) is converted into two proportional currents. The first ($I_B + 2I_R$) flows into the node "OUT 1" while the second ($I_R + I_B/2$) is delivered to side 2. A corresponding current from side 2 ($-I_R + I_B/2$) flows into Q_{18} and the amplified signal ($I_B - 2I_R$) is drawn from the "OUT 1" terminal. The net current delivered to the load (I_L) is therefore $4I_R$.

In the paragraph before last, the detailed operation of Q_{14} to Q_{17} was hurriedly glossed over in order to first cover the principle of the output circuit. The diode function of Q_{14} should be familiar by now, but the reason Q_{15} has also been made with a double emitter is to keep V_{BE} 15 with ($I_B + 2I_R$) equal to V_{BE} 17 with half that current. In this way, the collector and base terminals of Q_{16} are linked by a virtual short circuit and Q_{16} is constrained to also function as a diode.

OVERALL PRINCIPLE

When side 1 and side 2 are considered together, as in the simplified equivalent of Fig. 11, one can appreciate the overall concept of the VCT. The input signal ($V_1 - V_2$) causes a current imbalance $(V_1 - V_2)/R$ to be superimposed on the null input bias levels (Fig. 9.) With current gain mixed into the process, the bias currents are then balanced out leaving a net differential load current $4(V_1 - V_2)/R$ in the load (Fig. 11).

DEVICE PROPERTIES

Each multiple emitter in the prototype VCT has been assumed to give a gain of two. Clearly, it would be simple to vary this; indeed it would appear feasible to provide gain in other parts of the circuit as well as or instead of those shown. Nevertheless, for the prototype as shown, $I_L = 4(V_1 - V_2)/R$. For voltage gain, one might merely insert a load resistor R_L for a totally floating output gain $4R_L/R$. Other elementary circuit configurations have been described by Harris.

The absolute linear range of the VCT is restricted in both current and voltage.

Transistor cutoff when $2I_R = I_B$ (see Fig. 10) limits output current $I_L = 4I_R$) to a maximum of $\pm 2I_B$, I_B being set by the circuit designer. Either output current or load is also limited by load voltage and the onset of saturation in the output transistors, i.e. the load voltage $I_L R_L$ may not exceed the total power supply range minus $4V_{BE}$. For + 15V supplies and 10mA bias current the load impedance limit is 1k4 if the full output current range is to be available. Note also that wide signal excursions from the symmetrical design bias point lead to loss of linearity, since V_{CB}'s of the current source output transistors are moved off bias values causing β to also shift. The need to maintain V_{CB} and β close to design values also limits the acceptable power supply variation – about 10 to 15% according to Harris. These figures would suggest that linearity may be seriously degraded by voltage swing well before the saturation limit is reached.

High input impedance R_{in} is a fundamental requirement of the VCT concept and is the reason for the use of Darlington inputs. To the grossest of approximations, small signal R_{in} ($= \beta_1 \beta_2 R/\beta_{10}$) is critically dependent upon the input stage current gain and maximising it leads to a whole series of tradeoffs, (e.g. R. should be low for high transconductance, β_{10} high for current source operation).

The differential output impedance works out to be roughly $1/h_{oe}$ ($h_{oe} = \partial I_C / \partial V_{CE}$ for constant I_B) and naturally the output transistors must have high collector impedances. Both input and output circuits should function near ideally, however, provided they are not unduly pushed by the circuit designer's concept of reasonable source or load impedances!

Common mode rejection ratio and required offset will both depend upon the degree of symmetry attainable in mass production but there is no reason to be pessimistic about them. High slew rates have been reported and are undoubtedly due to the fact that currents vary in only half of the circuit transistors and that the signal only proceeds sequentially through about half of these.

CONCLUSION

The main objective of this article has been the explanation of the principles of circuit operation. A secondary aim was to point out some unwanted second order effects and practical limitations. Such limitations occur in all devices and must not be ignored by either the designer or user.

The immediate question is whether the VCT will survive through to production or remain just another bright idea. Simplicity is a major advantage to any technological innovation and despite the plethora of transistors, the VCT is very simple in principle. Furthermore its implementation will rely totally on existing technology – its future looks bright.

I should like to thank my students whose curiosity and questions about the VCT has led directly to this article.

MOC 3010 Triac Driver

Motorola's MOC3010/3011 provide a neat way to drive triacs with lots of isolation.

BEFORE GETTING INTO the MOC3010 right away, some background is in order for those who might not otherwise see the significance of this device. First...

WHAT'S A TRIAC?

Without going into a detailed explanation, a triac is a semiconductor device with three terminals, (two 'main' terminals, and a gate) which can be made to act like a switch, and is capable of passing current in both directions. Hence, it is ideally suited to AC power control, switching on or off lights, motors etc.

The way in which one operates it is as follows.

With no signal on the gate, no current passes through the triac. If a pulse is applied to the gate, the triac switches on and stays on until the current through it reaches zero, which in an alternating current circuit will be the end of the present half-cycle. (One can apply a DC signal to the gate, but a pulse is all that's needed since, as stated, the triac 'latches' on).

Fig. 1. The triac is very like a switch, but with a controling input, the gate.

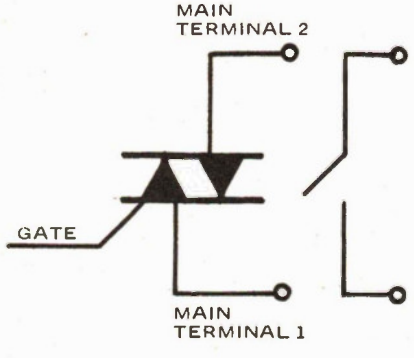

Now, the next problem is how to make a suitable gate signal, when the controlling signal may be the output of an op-amp, or TTL gate. Not only do voltages need changing somehow, but we want some isolation too. The triac is connected to the AC line, which is something we don't want our logic or analog circuit connected to. Previously a pulse transformer and associated driving circuitry were used to trigger the triac. This was messy and unaesthetic.

The MOC3010 opto-triac, itself able to switch alternating currents, provides the answer to the problem, since it can be driven directly from TTL or op-amp. The triac section is simply connected from one of the main terminals of the power triac, through a resistor to the gate of the power triac. Cheap and clean!

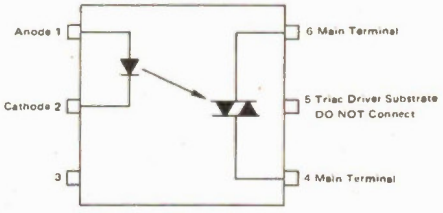

Fig. 2. Pin connection diagram of the MOC3010/3011.

The MOC3010 consists of a gallium arsenide infrared LED optically exciting a silicon detector chip, which is especially designed to drive triacs controlling loads connected to the 115 Vac power line. The detector chip is a complex device which functions in much the same manner as a small triac, generating the signals necessary to drive the gate of a larger triac. The MOC3010 allows a low power exciting signal to drive a high power load with a very small number of components, and at the same time provides practically complete isolation

Fig. 3. Very simple application of the triac driver, using low voltage wire not requiring conduit (for protection) to switch a light from a remote location.

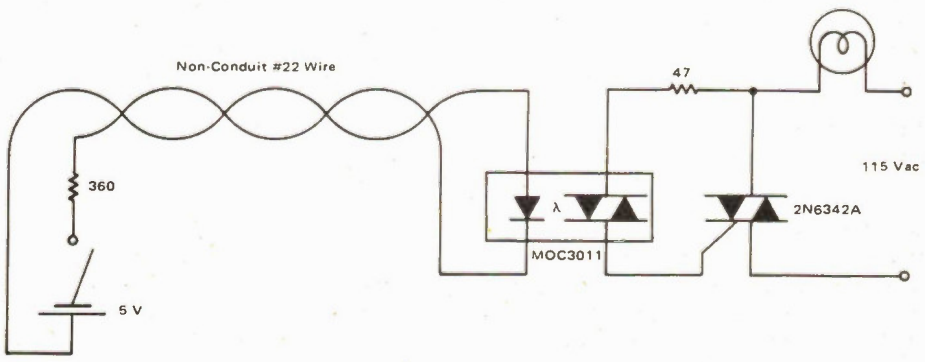

of the driving circuitry from the power line.

BASIC ELECTRICAL DESCRIPTION

The GaAs LED has nominal 1.3 V forward drop at 10 mA and a reverse breakdown voltage greater than 3 V. The maximum current to be passed through the LED is 50 mA.

The detector has a minimum blocking voltage of 250 Vdc in either direction in the off state. In the on state, the detector will pass 100 mA in either direction with less than 3 V drop across the device. Once triggered into the on (conducting) state, the detector will remain there until the current drops below the holding current (typically 100 uA) at which time the detector reverts to the off (non-conducting) state. The LED is guaranteed by the specifications to trigger the detector into the on state when 15mA or more is passed through the LED.

USING THE MOC3011 ALONE

In some applications, the MOC3010 may be used by itself, driving the load directly. The MOC3010 alone can, for example, switch a 7-½ watt 115 Vac light bulb. This lamp is sufficiently bright to be a useful warning light to attract attention to a serious malfunction in a microcomputer or other logic assembly. The MOC3010, a resistor, and the light bulb are the only components used, and there is practically complete isolation between the ac line and the delicate logic array.

INRUSH CURRENT

When driving an incandescent light bulb, the turn-on current can be about ten times the normal steady-state current, because the resistance of a cold filament is much less than the resistance of a hot filament. The MOC3010's maximum rated surge current, is 1.2 A, which is sufficient to prevent trouble when driving small loads directly.

RESISTIVE LOADS

When driving resistive loads, the circuit of Fig. 3 may be used. Incandescent lamps and resistive heating elements are the two main classes of resistive loads for which 115 Vac is utilized. The main restriction is that the triac must be properly chosen to sustain the proper inrush loads.

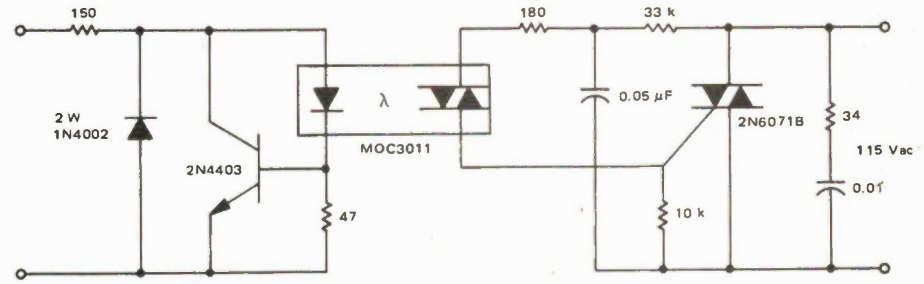

Fig. 4. In some applications such as solid state relays, the input voltage may vary widely. Thus the designer may want to limit current applied to the LED of the 3010. The circuit above allows a non critical range of input voltages to properly drive the 3010 while also protecting the input LED from inadvertent reverse voltages.

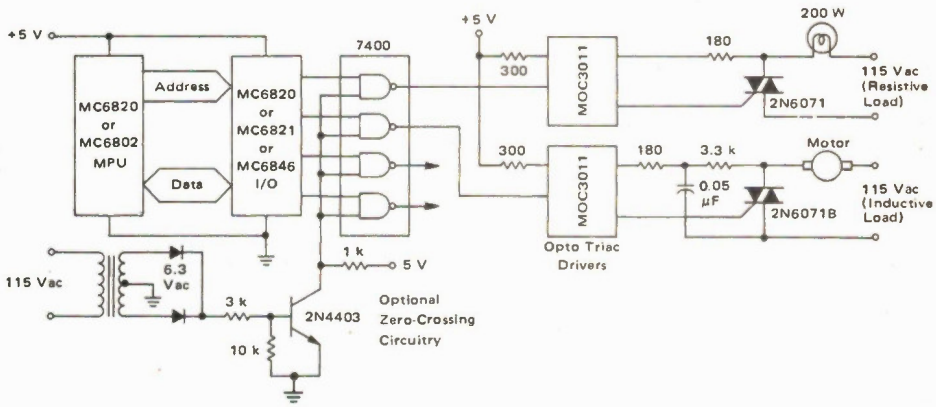

Fig. 5. Microprocessor interfaced to AC loads.

Table 1. Some of the important characteristics of the MOC3010 and 3011.

LED CHARACTERISTICS	SYMBOL	TYP	MAX	UNITS
Reverse Leakage Current (V_R=3.0V)	I_R	0.05	100	uA
Forward Voltage (I_F=10mA)	V_F	1.2	1.5	V
Reverse Voltage, Max	V_R		3.0	V
Cont Fwd Current, Max	I_F		50	mA
DETECTOR CHARACTERISTICS				
Peak Blocking Current	I_{DRM}	10	100	nA
Peak On-State Voltage	V_{TM}	2.5	3.0	V
Critical Rate of Rise of Off State V	dv/dt	2.0		V/us
Critical Rate of Rise of Commutating V	dv/dt	0.15		V/us
COUPLED CHARACTERISTICS				
LED Current Req'd to Latch MOC3010	I_{FT}	8.0	15	mA
MOC3011		5.0	10	mA
Holding Current	I_H	100		uA
DRIVER CHARACTERISTICS				
Max Off-State Voltage	V_{DRM}		250	V
Max On-State RMS Current T_A=25°C	$I_{T(RMS)}$		100	mA
Max On-State RMS Current T_A=70°C			50	mA
Peak Non-Rpt Surge Current	I_{TSM}		1.2	A

INDUCTIVE LOADS COMMUTATING dv/dt

Inductive loads (motors, solenoids, magnets, etc.) present a problem both for triacs and for the MOC3010 because the voltage and current are not in phase with each other. Since the triac turns off at zero current, it may be trying to turn off when the applied current is zero but the applied voltage is high. This appears to the triac like a sudden rise in applied voltage, which turns on the triac if the rate of rise exceeds the commutating dv/dt' of the triac or the static dv/dt of the MOC3010. The solution to this problem is provided by the use of 'snubber' networks to reduce the rate of voltage rise seen by the device. In some cases, this may require two snubbers—one for the triac and one

for the MOC3010. The triac snubber is dependent upon the triac and load used. In many applications the snubber used for the MOC3010 will also adequately protect the triac. Designing a snubber network is more complex than can be adequately covered here, refer to the data books on triacs (RCA has a good one) and also the application notes on the MOC3010.

SOLID STATE RELAY

Figure 4 shows a complete general purpose, solid state relay snubbed for inductive loads with input protection. When the designer has more control of the input and output conditions, he can eliminate those components which are not needed for his particular application to make the circuit more cost effective.

INTERFACING MICRO-PROCESSORS TO 115 VAC PERIPHERALS

The output of a typical microcomputer input-output (I/O) port is a TTL-compatible terminal capable of driving one to two TTL loads. This is not quite enough to drive the MOC3010, nor can it be connected directly to an SCR or triac, because computer common is not normally referenced to one side of the ac supply. Standard 7400 series gates can provide an input compatible with the output of an MC6820, MC6821, MC6846 or similar peripheral interface adaptor and can directly drive the MOC3010. If the second input of a 2 input gate is tied to a simple timing circuit, it will also provide energization of the triac only at the zero crossing of the ac line voltage as shown in Fig. 5. This technique extends the life of incandescent lamps, reduces the surge current strains on the triac, and reduces EMI generated by load switching. Of course, zero crossing can be generated within the microcomputer itself, but this requires considerable software overhead and usually just as much hardware to generate the zero-crossing timing signals.

Just recently Motorola have introduced a related device, the photo triac driver. Designated the MRD3010/MRD3011 these devices are just like the triac opto-isolators discussed here, except that the opto-triac is driven by external light rather than an internal LED. The device is sensitive to both visible and infrared light.

Kits for ETI Projects

Now Available

ETI Graphic Equalizer
$166.00 (power supply not incl.)
Finished cabinet $13.95 extra.
ETI Project No. 134
True RMS Voltmeter
$89.95
ETI Project No. 450
Bucket Brigade
Audio Delay Line
$48.50
ETI Project No. 486
Frequency Shifter
$69.95
ETI Project No. 585
Ultrasonic Switch
$29.95
ETI CCD Phaser
$79.95

Cheque, Money Order or Mastercharge
Include card expiry date and number
Ontario residents please add 7% sales tax

DO NOT SEND CASH
Allow 3 weeks for delivery

DOMINION RADIO & ELECTRONICS
535 Yonge St. Toronto
Ontario M4Y 1Y5

DIGITAL CLOCK

- Large Bright Digits
- Crystal Accuracy
- 12VDC Operation
- Beautifully Packaged
- Pop-in Panel Mountable
- Bracket Supplied for Under Dash Mounting
- Written Warranty Provided
- Dealer Enquires Invited

$24.95

A unique addition to your auto or electronic project the Kobol Clock is shipped within 24 hrs of your order. Send $24.95 + $1.50 postage and handling (Ont. residents add 7% P.S.T.). Chargex orders need expiry date, number, and signature.

Lorcanic Corporation Limited
P.O. Box 126, Stn. A, Ottawa, Ontario
K1N 8V1

Also available at Kris Electronics in Ottawa

dear dealer$

If your customers are into building projects, the printed circuit board is 'square one.'

ceresist *PCB transfers are not just another gimmick or frill. They are the EASIEST way to pro-quality circuit boards.*

They move well, with good repeat sales. They are easy to handle and inventory. The don't tie up an arm and a leg in cost of stock. They're nationally advertised and unconditionally guaranteed. They generate business by bringing customers to your store.

No one says you've got to carry ceresist but it's a darned good line. Retail dealerships are still available. Drop a line to:

(Ontario): DOMINION RADIO, 535 YONGE ST., TORONTO, M4Y 1Y5
(B.C.): INTEK ELECTRONICS LTD., 7204 MAIN ST., VANCOUVER, B.C. V5X 3J4.
(Other): CERES, 53 BURNETT AVE., WILLOWDALE, ONT. M2N 1V2

Enquire about 'STARTER' & MINI-STARTER' KITS

ceresist

IF YOUR DEALER HASN'T GOT IT — Write to us. Samples are $1 (refundable). And give us that dealer's name!

Obtaining a Video Machine

Part Two of Getting Into Video: Steve Rimmer examines ways of getting a recorder inexpensively, and some of the models you may encounter.

This is the second in a series of articles on knowing about video recording, and how to get into this exciting activity if you're short on dollars but long on practical know how. Last month in this feature Steve covered some basic historic facts, and in addition we looked at the technical aspects in "Principles of Video".

In future parts Steve tells how to get (and keep) your machine alive, and talks about modifications and accessories.

LOCATING an obsolete, soon-to-be scrapped VTR which someone (preferably the party which owns it) will sell you at a reasonable price requires some footwork and some luck, but should not be considered to be prohibitively difficult. A quick scan through the want ads, especially one of those tabloid papers comprised entirely of want ads, is a good start. Next, you might inquire at electronic surplus dealers, who occasionally come up with a few and, perhaps even more productively, at firms which sell, install or service closed circuit television equipment. Those who do a rental business are better still. These companies often wind up with trade-ins or rental returns which are too old to put back in service. Since industry requires a very high degree of reliability in its equipment and is not adverse to paying for it, anything over five years old usually falls into this category, and is written off as being uneconomical to repair and maintain. It is then usually sold for its material value alone, generally at around fifty cents per pound.

For the experimenter, this is an ideal situation. Since a large percentage of the cost of maintaining a piece of five year old equipment, from the point of view of an industrial user, is the profit he is unable to make with the machine during those periods when it is out for repairs and, therefore, unable to be used, and not the actual expense of new parts, in most cases the real cost of returning such a machine to service and keeping it there is quite reasonable for the home user who is prepared to do his own repair work. The only difference, then, between such a refurbished VTR and a new one is that the former can be expected to require more frequent service. However, considering the disparity in price and the relatively non-critical demands placed upon a home VTR in this situation, this does not seem too much of a drawback.

There is a second facet of industry that is a heavy user of television equipment and, depending upon your access to it, it might prove to be a good place to check for a used VTR. Many of the large companies maintain extensive video departments which make tapes to be used in familiarizing employees with new products or techniques. Very often these divisions are rather lavishly funded and, therefore, seem to be discarding equipment left and right whenever it becomes even the slightest bit "behind the state of the art". Much of this gets snatched up by the immediate personnel, who are usually less lavishly funded. The trick to getting equipment of this sort is simply being in the right place at the right time. If you, or a friend, are employed by a firm which has a TV department, it might be worthwhile checking out what is slated to be replaced in the near future.

The last places you might try are schools and cable television stations, which use closed circuit TV equipment for educational purposes in the first case and for the production of programming on the "community access channels" in the second. Neither of these, however, are terribly hot prospects, as both are usually running on fairly marginal budgets and when selling off old equipment will often price it absurdly high in order to recoup as much of the original purchase price as possible. Still, they are worth a try.

CHECKING IT OUT

In all cases, anything you get will be sold "as is", and seldom, if ever, will you be able to return your little jewel if it turns out, instead, to be a glass doorknob. To further complicate matters, most situations in which you will find these old VTRs will not permit you to take the back off and conduct a minute inspection. Most, in fact, (quite conveniently) will not even have a television set handy in order to allow you to see if you can get a picture out of the thing. You will occasionally run into

someone who will deliberately sell the machine in a room totally devoid of wall plugs so you can't even see if the pilot light works. There are, however, a few things that you can check despite all this to assure yourself that you will not be buying a helical scan boat anchor.

The most susceptible component of a VTR is the video head. Coincidentally, it is also the singularly most expensive part in the entire machine, costing up to four hundred dollars to replace. They are to be found surplus, of course, but never of the type that you need. The first thing that you will want to check on a machine you are considering, then, is the condition of the head. It will be located somewhere in the slit running around the large drum about which the tape is wrapped. If you are totally unfamiliar with VTRs and are unable to locate the head, you may have to suffer looking like an idiot for a moment and have the machine's present owner point it out for you.

What you wish to check for with regards to the video head is excessive wear of the surface which makes contact with the tape. This is not all that easy to do. The pole pieces of the head, which are all that will be visible, are very small, perhaps an eighth of an inch and some are flat, others chisel shaped. Some VTR manufacturers, Ampex, for instance, start with flat heads upon installation and then run a special, highly abrasive tape over them to make them flush with the surface of the drum. It is, then, impossible to provide a reliable description of what a worn or unworn head should look like, as they vary so widely between manufacturers. You will have to rely upon your own judgment, looking for pits, irregularities or other aspects of the head surface that do not appear as though they would have been manufactured that way. A strong light and a magnifying glass will prove helpful.

Some machines have two heads, 180° apart around the drum, in which case you will wish to check both. Since both heads in this type of arrangement tend to wear at approximately the same rate, if one head appears to be much newer than the other, it indicates that it has been changed recently and its counterpart, on the other side of the drum, will shortly have to follow.

Check for screwdriver scratches around the heads of the bolts which hold the cover on the machine. If there are none, that is, if the "back has never been off the set", it is likely that the machine was running satisfactorally right up until the day it was replaced and it gave no trouble while it was in service. If, on the other hand, it appears that the machine has been in the shop frequently you might wish to inquire of its owner what went wrong with it.

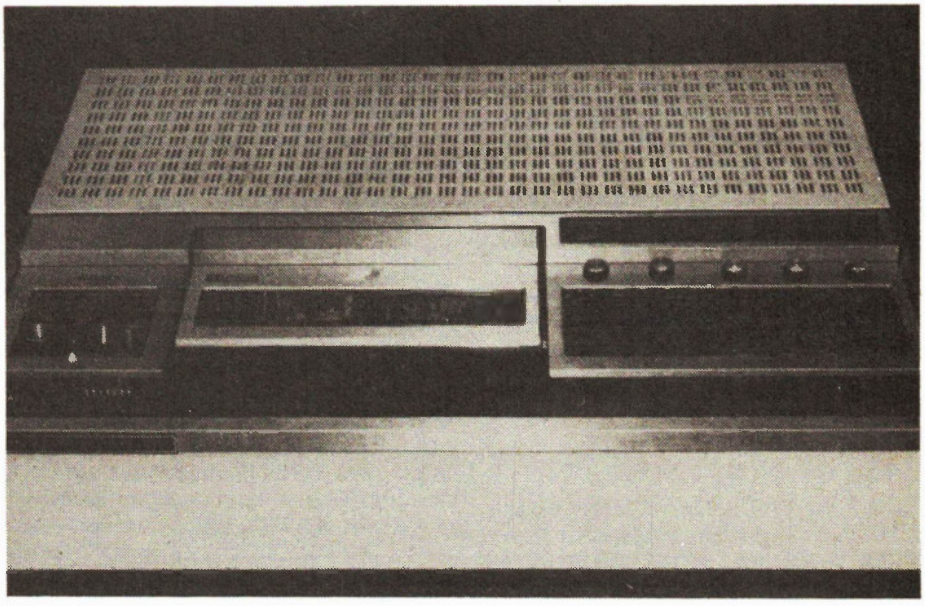

Sony's U-Matic video cassette machine.

Check to see that both reel spindles revolve and that the video head spins. If they fail to do so, you may be able to determine if the cause is a burnt out motor or simply a broken belt by feeling around the case for the vibrations caused by a spinning motor. Drive belt problems are very common in video tape recorders.

Inspect the tape guides, pinch rollers, capstan and stationary heads (there will probably be two: one wide one, the erase, and one with two small recording surfaces that will line up with the edges of the tape, the audio and the control heads) for excessive wear and all moving parts for excessive slop in their operation.

Lastly, try to ascertain the general condition of the machine, taking into account its physical appearance. Does it appear to have been used infrequently or constantly, used carefully or abused by inexperienced operators, etc? Machines that have been out on rental or those owned by schools or cable television companies seem to be more frequently used carelessly.

BUYING

When considering whether or not a given machine is a worthwhile investment, all of the above factors should be taken into consideration as additional costs. For instance, if the machine needs a new set of drive belts, the potential purchaser must add the cost of the belts to the price of the machine in his evaluation. One should not, however, turn down machines just because they need repair; if they were working properly they would probably cost a lot more.

When you buy your machine there are several things you should try to get with it, if its present owner has them and is willing to part with them. First, ask for any literature that deals with the set, an owners guide, or, ideally, a service manual. If these are unavailable, at least have him tell you as much as he knows about the operation of the machine. Secondly, see if you can get a take-up reel and a reel of tape, preferably one which has something on it, as this will greatly assist you in troubleshooting the circuitry of the VTR should this prove necessary. You may also wish to inquire about any other tape which might be for sale, as, with the present move to cassettes, one inch tape is a bit scarce and often has to be ordered specially. If they do not seem to be included with the machine, you might ask about any attachments, such as the line cord and video cables. Usually,

though, these are not difficult to obtain elsewhere if necessary.

When you have finally managed to transport your VTR to its new abode, and this in itself might require two strong men to accomplish, you should immediately ascertain how well it actually is working and, as will very likely be the case, what parts you will need to repair it. Unless they are common tubes, transistors, resistors and the like, they will probably have to be ordered from wherever they are made, by the manufacturer of the set, so the sooner you find out what you need, the better.

TYPES OF VTR

There were dozens of different types of VTRs produced with one inch tape drives, pretty well all of which were solidly built and would serve equally well for the home experimenter. Exactly which machine you wind up purchasing will probably be determined more by what is available than which particular brand you favor. Here, however, are two classes of machines which depart from the typical type of VTR and may, therefore, be of interest, should you run across one of them.

1. Video Players. When industry got heavily into the use of television for training purposes, it discovered that it was buying a lot of video recorders that were only being used as playback machines. Thus came to pass video players, playback only machines which could be used to display pre-recorded tapes. The Ampex VP-4900 is an example of such a machine. There is an interesting hitch to video players, however.

It seems that the demand for playback only machines was not great enough to warrant retooling the machinery specifically for their production, so, instead, many manufacturers simply built their standard VTR models with all of the parts used to record left out. Such is the case with the VP-4900. Its circuit boards appear to be identical with those of the full featured 5000 series machines, right down to the part numbers, except that there is a large number of unoccupied spaces for components which would have been used to make recordings. The chassis has all the punch outs for a video gain control, a record switch, a couple of VU meters and so forth. In short, it seems that there is no reason why a patient experimenter could not add the remaining bits and pieces and turn the thing into a full fledged VTR. I, myself, have yet to attempt it; however, it might be a solution to obtaining a video tape recorder if all you can find are players.

Note, however, that all playback-only machines may not be as easily convertible. If you are considering buying one with this idea in mind, check it out to see if it is suitable for such modification.

2. "Porta-paks". First introduced as half inch VTRs by Sony, porta-paks are now mostly cassette machines, which are not as cumbersome to thread in the field. Thus, the reel to reel units are often being sold off, just as the one inch drive VTRs are. For the uninitiated, a porta-pak is a little self-contained one man television studio. It consists of a small suitcase-sized VTR that uses five inch reels of half inch wide tape. Connected to this, via a rather muscular looking umbilical cable is a compact, lightweight vidicon television camera, usually with a built-in mike that protrudes just above the lens. The camera has an attached grip, making it look like a Super eight movie camera with a thyroid condition. In the space that would normally be the eyepiece, there is the tiniest picture tube ever made by the human hand, which serves as a viewfinder when recording and a playback monitor if you wish to review what you have shot while you're still in the field. The machines are powered by internal battery packs and also have provisions for using an external twelve volt supply. They weigh about five pounds shy of an elephant after you have been toting them around for a while.

They usually have some means of attaching an external playback monitor and also to feed in video from a source other than that of the built-in camera.

There were a few porta-paks made which were capable only of recording, without any playback functions, in order to reduce size and weight. Unlike the video players mentioned above, it is unlikely that they can be modified so as to have full VTR capabilities without engaging in a major conversion job. The intent with these machines was to play the tapes that were made on them back on a studio machine once the camera man had finished shooting on location. The trick to spotting these machines is that they do not have a playback position on the function switch.

Porta-paks are a great deal of fun if you are able to find one in decent shape. However, as they are generally used in the field, and often by untrained operators, they tend to be somewhat worse for wear than their studio counterparts. As well, made largely of plastic, they do not hold up as well under day to day use, although a bit of glue will often fix this. In some cases it is possible to buy a porta-pak with a shattered case but working "innards", making it useless for its "porta" function but ideal for the experimenter.

SURVEY

The following is a survey of some of the more prevalent models of Video Tape Recorders, circa 1968. As few of the manufacturers are still able to supply literature regarding the specifications of these old machines (service manuals are generally still available), this list has been compiled largely from skulking through the back rooms of various cable television stations and from some dusty magazine reviews, found in some dusty boxes of magazines I'd almost managed to forget about.

SPECIFICATIONS

The facts and figures listed in the survey may prove a little confusing: here is a brief rundown of what they mean.

Tape width: is either half or one inch. Neither format is interchangeable between machines of different manufacture as far as recording on one company's VTR and playing back on someone else's. Most of the 1/2 inch machines, however, use the same tape and reels, so the tapes themselves can be used on several machines (thus, only the information on them is unique to each brand). Most of the one inch VTRs are fairly choosy about what sort of tape they work with.

The tape speed determines the playing time of the reel of tape, of course, as well as the picture quality and, usually, the degree of "finickiness' of the VTR's tracking adjustment (i.e., whether you'll have to fiddle with the knob each time you put on a new tape), both of which are improved with increasing tape speed. Note that the times listed are for playing the tape through in one direction: unlike as in audio recording, you cannot flip the reels over and use the "other side" of the tape.

Reel size: the standard and easily obtainable reel sizes are 8 inch and 9 3/4 inch diameter for one inch tape and 5 and 7 inch for 1/2 inch tape. Other sizes will be difficult to locate at best.

Playing times: as you may have noticed, many of the playing times seem to be rather contradictory, with the same sized reel of tape and the same tape speed affording different playing times on different machines. Undoubtedly, much of this is due to some of the manufacturers (who supplied the figures) stretching the truth slightly for merchandising purposes. There is also the situation that tape is available in different thicknesses, and thinner tape permits the winding of more actual feet on a given size of reel, thus increasing the running time. A more useful figure would have been the running time for a given length of tape; however, this was not available.

Weight: Heavier machines are more cumbersome, of course, but increased weight also indicates an increased use of metal as opposed to plastic, often producing a more durable machine.

AMPEX: Model Numbers VR-5000, VR-6050, VR-7000, VR-7500. The 5000 and 6050 models are electrically similar, with the 5000 being physically smaller (and somewhat more recent). The 6050, 7000 and 7500 models are all physically similar. All use one video head, and record on one inch wide tape on 9 3/4 inch reels. The tape speed is 9.6 ips, and a reel is good for about an hour's running time. All the machines weigh in the area of a hundred pounds. The 7000 and 7500 models have color. These are undoubtedly the most popular of the machines to be discussed here.

CONCORD: VTR-500. The VTR-500 has two video heads, and uses seven inch reels of half inch tape, running at 12 ips for a running time of one hour per reel. It is smaller than most one inch tape machines, and, at about fifty pounds, much lighter.

CRAIG: 6401: Similar to the CONCORD, above, except that it records at 9 1/2 ips and can take 7 or 8 1/2 inch reels. It is also ten pounds heavier.

GENERAL ELECTRIC: Model Numbers VC-941 , 2-30, PT-2a and PT-3a. The 941 is again similar to the CONCORD above, except that its recording speed is 7 1/2 ips, stretching its running time to an hour and a half. Unlike all the other machines discussed here, it stands upright, like an audio deck.

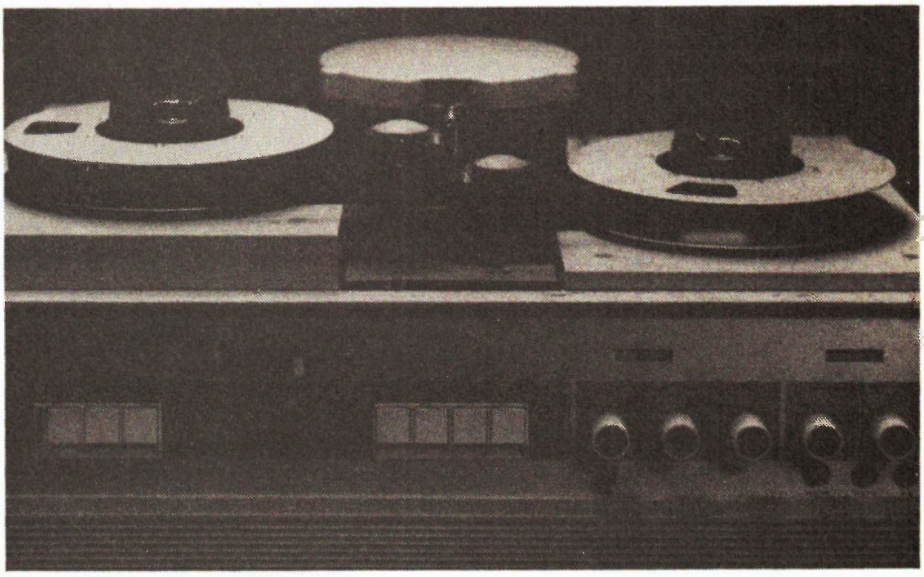

A Philips reel-to-reel recorder.

The other three models are complete video departments, with camera, monitor and all of the other necessary bits and pieces, including a cabinet in which they all live. The 2-30 is a one inch VTR, with a tape speed of 7 3/4 ips, using standard 8 inch reels. It has color. The other two are black and white sets, using seven inch reels of half inch tape running at 7 1/2 ips. All three have running times of slightly more than one hour. Nice if you can find them, but usually scarce.

MATSUSHITA: Model numbers NV-204, NV-8000. The 204 is a one inch machine using oddball 8 1/2 inch reels, thought the more common 8 inch ones should also work, 8.57 ips tape speed and a one hour recording time. It has color capability, and still frame. The 8000 is yet another CONCORD in sheep's clothing, except that it has a tape speed of 12 ips, producing a running time of about 40 minutes.

PHILIPS: Model numbers EL3400 and EL3401. Both models are essentially similar, with one inch tape on eight inch reels (9 inch will fit if you can find them) running at 9 ips for a total running time of a bit more than 40 minutes per reel. Weighs in at an even hundred pounds. The circuitry is largely vacuum tubes. Built with typical European engineering to last well into the next century. Parts are rather expensive.

WOLLENSAK VTR-150: This is another half inch machine, but it uses a single head, eight inch reels, 7 1/2 ips tape speed and a one hour running time. It is larger than most half inch machines, but still only weighs about fifty pounds.

SHIBADEN; A more compact sort of CONCORD, except with 7 1/2 ips tape speed.

SONY: Model numbers CV-2000, TCV-2010, TCV-2020, and DV-2400. The first three machines all have two heads, use seven inch reels and have a tape speed of 7 1/2 ips. All, naturally enough, run for an hour on a reel of tape. The 2020 has a built in timer to turn on the machine at a predetermined time and record unattended. It also comes with a built-in monitor, making it a very handy, self contained video machine which is ideal for the home experimenter. Not unexpectedly, it is hardly ever found for sale. The 2400 is a porta-pak (see the text for what a porta-pak is), with one head and five inch, twenty minute reels. It comes with an attached camera, internal battery and built-in mic.

Video groups are invited to write to Steve, (care of ETI) and we will publicize their existence and activities to help put more interested hobbyists in contact. In addition, any individuals with used video equipment they wish to get rid of are welcome and encouraged to advertise it in our Marketplace section. See also classified ads in future issues.

NEXT MONTH: Getting and keeping that machine running.

Your Zenith Distributor has the parts and accessories you need in one convenient place — your Zenith One-Stop Shopping Center.

REPLACEMENT PICTURE TUBES

Famous Super Chromacolor® picture tubes in a range of sizes to replace a total of 80 industry types. Plus Sunshine® and Cinebeam picture tubes to fit almost any brand of color TV. And Zenith black & white picture tubes to replace 401 other types of B & W tubes.

REPLACEMENT RECEIVING TUBES

A complete line of more than 1,000 Zenith quality tubes . . . the same tubes as used in Zenith original equipment. Built to operate with great reliability — to cut your callbacks. And they have the long life needed to increase the satisfaction of your customers.

ZENITH QUALITY PARTS

All the parts you need, from bel fuses to TV knobs. The star is the Zenith Instant Parts Program (ZIP). It puts the 100 most used replacement parts at your fingertips, in a specially designed, compact rack. ZIP makes inventory and re-ordering fast and easy for you. Also, Zenith now offers a line of capacitors, resistors, integrated circuits and universal semi-conductors and a full line of universal needles and cartridges.

ZENITH QUALITY ACCESSORIES

Here are just a few! Quad, stereo and monaural headphones. Broadened line of outdoor antennas featuring 13 all-new Super Chromatenna models. Complete new Chromatenna indoor antenna line. Antenna rotors. Three grades of batteries in a wide range of sizes. Electronic chemicals, including tuner degreaser, tuner cleaner, circuit cooler and tape head cleaner. Cassette and 8-track recording tape cartridges and record care products. A full line of test equipment & service aids.

Beside parts and accessories, your Zenith Distributor has the specialized "know how" to help solve tough service problems. Come in or phone today.

ZENITH®

For quality you can depend on. in replacement parts and accessories — all in one convenient place

YOUR LOCAL ZENITH DISTRIBUTOR:

Major Appliances Div., Acklands Ltd., 1725 Quebec Street, Vancouver, B.C. Phone-1-604-879-4631

B.R.E. Electric Ltd., 5544-5th Street S.E., Calgary, Alta. T2H 1L3 Phone-1-403-253-7171

B.R.E. Electric Ltd., 14840-115th Ave., Edmonton, Alta. T5M 3C1 Phone-1-403-455-7171

Major Appliances Div., Acklands Ltd., 1155 Sherwin Rd., Winnipeg, Man. R3H 0V1 Phone-1-204-633-6679

Zenith Radio Corporation of Canada Ltd., 1020 Islington Ave., Toronto, Ont. M8Z 5X5 Phone-1-416-231-4171

Zenith Radio Corporation of Canada Ltd., 900 Boul St. Martin O., Chomedey, Lav. PQ H7S 2B6 Phone-1-514-663-0430

A New Kind of Service Shop

This service shop is doing very well thanks, servicing just about anything, but not especially TVs.

HI! BELIEVE IT or not, it is very tough trying to be a writer, and at times I find myself wishing for a nice defective TV chassis to pore over, instead of racking my addled brain over a blank sheet of paper, waiting for inspiration.

In previous issues I have mentioned the obvious need for diversification on the part of the practising TV technician if he wishes to remain in domestic electronics, and I decided after considerable thought that a column on a successful service centre that does not depend on just TV, stereo, radios, etc., should be of interest to most of our readers.

Thanks to Mr. Frank White of Radio Trade Supply Ltd. of Toronto, I first phoned and then went to see a Mr. Harry Dale of Dale Integrated Services Company Limited. Harry, the president, quickly put me at ease, and after a rapid tour of the large, well-lighted, airy service facility, we sat down with the tape recorder running and a coffee beside me, to discuss this extremely interesting-looking operation.

The company has been operating for approximately 4½ years, with branches in five other centres across Canada. These are located in Montreal, Ottawa, Winnipeg, Calgary and Vancouver. They are all self-contained, comprising complete office and service facilities. I should have mentioned that this is strictly a service operation, and from all appearances an extremely successful one.

The Toronto (head office) location is staffed by 27 technicians and office personnel. The company does not make service calls for any reason whatsoever, and yet with carry-in service and service contacts from south of the bor-der they seem to have as much work as they can adequately handle, and according to Mr. Dale their business is non-seasonal and they operate at the same pace year round. The company is at present actively engaged in the service of TV converters, TV games, computers, calculators, citizens band radios, burglar alarms, electronic clocks and watches, and the new extremely sophisticated chess and backgammon games. Even this list is undoubtedly incomplete.

I asked the president if trained staff was a problem and he said not, stating that in his opinion if a technician had a thorough knowledge of basic electronics he could very quickly teach him all that is required for the efficient service of the aforementioned products. He went on to say that girls also, even with no previous technical training, can very quickly be trained for production type faults in from 6-8 weeks, and in that very short space of time they invariably become proficient and productive members of the organization.

COMMENTS

I found the whole operation extremely interesing and was more than surprised at the vast amount of visible work in a company only 4½ years old. Mr. Dale is obviously a go-getter and prepared to service anything electronic. For the most part they charge a flat rate and guarantee everything they do for a period of 30 days, and even in the event of a completely unrelated fault occurring in this space of time they will fix it free of charge. Their charges, in view of the guarantee, appear to be extremely reasonable. I asked Mr. Dale if he was prepared to service a TV brought in by a member of the public and he said he was, but surprisingly enough did not appear to be overly enthused at the prospect. He did imply that they were not really set up for TV service. I must admit that I was somewhat surprised, in view of the well-equipped workshop available to him, that the company was not operating a fleet of trucks and making house calls and taking an even larger share of the local domestic electronic service business.

But again, thinking back to my own operation with trucks, gas, insurance, accidents, etc., maybe he is a much smarter man than I.

Best of luck.

Richard Cartwright.

We invite companies and service organizations to send in any material which may be of interest to others in the service business. This includes news about seminars, technical development, letters and comments on what improves (or otherwise!) business etc. Please send to Service News, Electronics Today Magazine, Unit 6, 25 Overlea Blvd., Toronto, Ontario, M4H 1B1.

SERVING CANADIANS FOR OVER 25 YEARS

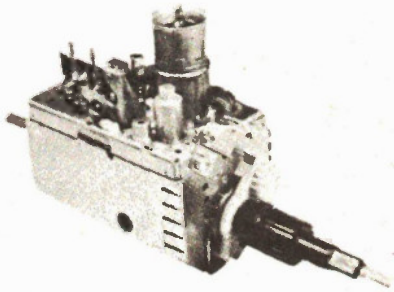

UHF • VHF • FM VARACTOR TUNERS

Solid State our Speciality

We service more TV Tuners than all other tuner companies combined.
We also service all makes of TV cable convertors.

a

CASTLE TUNER SERVICE

24 Cranfield Road,
East York, Toronto M4B 3H1
Tel: 752-7330/1

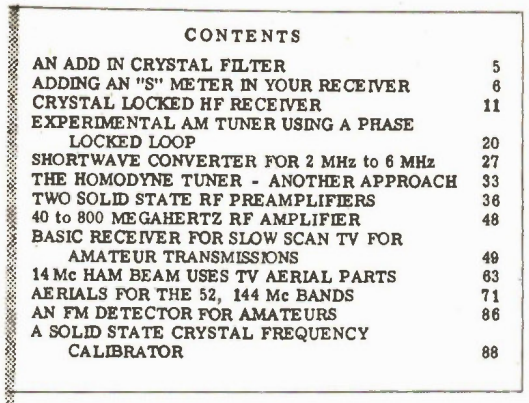

CONTENTS

AN ADD IN CRYSTAL FILTER 5
ADDING AN "S" METER IN YOUR RECEIVER 6
CRYSTAL LOCKED HF RECEIVER 11
EXPERIMENTAL AM TUNER USING A PHASE LOCKED LOOP 20
SHORTWAVE CONVERTER FOR 2 MHz to 6 MHz 27
THE HOMODYNE TUNER - ANOTHER APPROACH 33
TWO SOLID STATE RF PREAMPLIFIERS 36
40 to 800 MEGAHERTZ RF AMPLIFIER 48
BASIC RECEIVER FOR SLOW SCAN TV FOR AMATEUR TRANSMISSIONS 49
14 Mc HAM BEAM USES TV AERIAL PARTS 63
AERIALS FOR THE 52, 144 Mc BANDS 71
AN FM DETECTOR FOR AMATEURS 86
A SOLID STATE CRYSTAL FREQUENCY CALIBRATOR 88

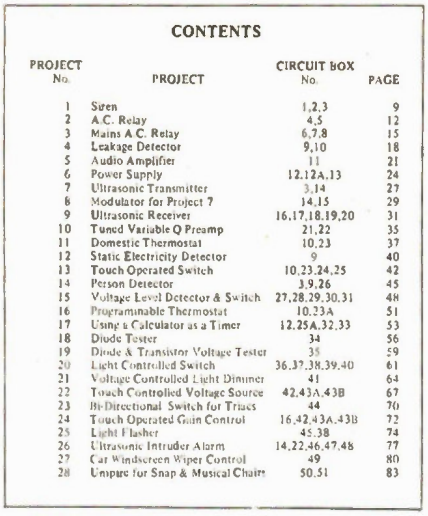

CONTENTS

PROJECT No.	PROJECT	CIRCUIT BOX No.	PAGE
1	Siren	1,2,3	9
2	A.C. Relay	4,5	12
3	Mains A.C. Relay	6,7,8	15
4	Leakage Detector	9,10	18
5	Audio Amplifier	11	21
6	Power Supply	12,12A,13	24
7	Ultrasonic Transmitter	3,14	27
8	Modulator for Project 7	14,15	29
9	Ultrasonic Receiver	16,17,18,19,20	31
10	Tuned Variable Q Preamp	21,22	35
11	Domestic Thermostat	10,23	37
12	Static Electricity Detector	9	40
13	Touch Operated Switch	10,23,24,25	42
14	Person Detector	3,9,26	45
15	Voltage Level Detector & Switch	27,28,29,30,31	48
16	Programmable Thermostat	10,23A	51
17	Using a Calculator as a Timer	12,25A,32,33	53
18	Diode Tester	34	56
19	Diode & Transistor Voltage Tester	35	59
20	Light Controlled Switch	36,37,38,39,40	61
21	Voltage Controlled Light Dimmer	41	64
22	Touch Controlled Voltage Source	42,43A,43B	67
23	Bi-Directional Switch for Triacs	44	70
24	Touch Operated Gain Control	16,42,43A,43B	72
25	Light Flasher	45,38	74
26	Ultrasonic Intruder Alarm	14,22,46,47,48	77
27	Car Windscreen Wiper Control	49	80
28	Umpire for Snap & Musical Chairs	50,51	83

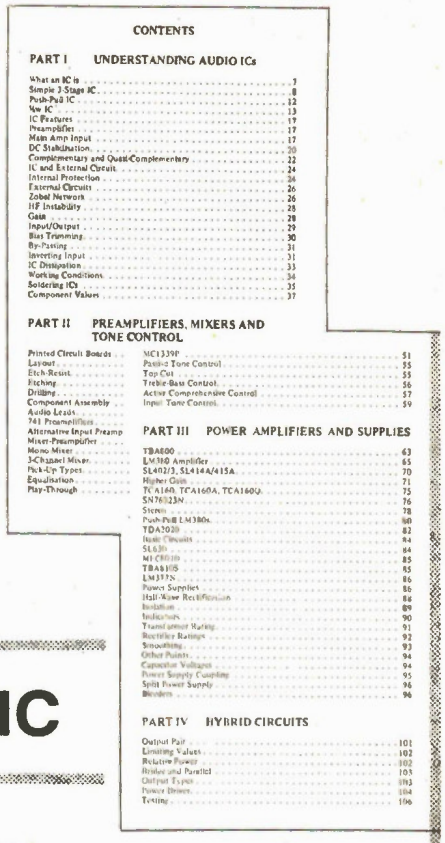

CONTENTS

PART I UNDERSTANDING AUDIO ICs

What an IC is 7
Simple 3-Stage IC 8
Push-Pull IC 12
New IC 13
IC Features 17
Preamplifier 17
Main Amp Input 17
DC Stabilization 20
Complementary and Quasi-Complementary 22
IC and External Circuit 24
Internal Protection 24
External Circuits 26
Zobel Network 26
HF Instability 28
Gain 28
Input/Output 29
Bias Trimming 30
By-Passing 31
Inverting Input 31
IC Dissipation 33
Working Conditions 34
Soldering ICs 35
Component Values 37

PART II PREAMPLIFIERS, MIXERS AND TONE CONTROL

Printed Circuit Boards 51
Layout 51
Etch-Resist 55
Etching 56
Drilling 57
Component Assembly 57
Audio Lexan 59
741 Preamplifiers 59
Alternative Input Preamp 59
Mixer-Preamplifier 59
Mono Mixer 63
3-Channel Mixer 65
Pick-Up Types 70
Equalization 71
Play-Through 75
MC1339P 76
Passive Tone Control 76
Top Cut 78
Treble-Bass Control 80
Active Comprehensive Control 82
Input Tone Control 84

PART III POWER AMPLIFIERS AND SUPPLIES

TBA800 85
LM380 Amplifier 85
SL402/3, SL414A/415A 86
Higher Gain 86
TCA160, TCA160A, TCA160Q 88
SN76023N 89
Stereo 90
Push-Pull LM380s 91
TDA2020 92
Hum Circuits 93
SL630 94
MJ CP0100 94
TBA810S 95
LM377S 96
Power Supplies 96
Half-Wave Rectification 98
Isolation 99
Inductors 90
Transformer Rating 91
Rectifier Ratings 92
Smoothing 93
Other Points 94
Capacitor Voltages 94
Power Supply Coupling 95
Split Power Supply 96
Bleeders 96

PART IV HYBRID CIRCUITS

Output Pair 101
Limiting Values 102
Relative Power 102
Bridge and Parallel 103
Output Types 103
Power Drivers 104
Testing 106

Shortwave/ Transistor/ Audio IC

Above are the contents pages for these three pocket-sized books. The books were published in England by Babani Press & Bernards (Publishers) Ltd., and we now have stocks in Toronto for ETI's readers. Titles, authors and Canadian prices (including postage) are as follows:

'Shortwave Circuits & Gear For Experimenters & Radio Hams' by B.B. Babani, $2.60.
'28 Tested Transistor Projects' by R. Torrens, $2.85.
'Handbook of IC Audio Preamplifier & Power Amplifier Construction' by F. G. Rayer, $2.85.

Send order with cheque or Mastercharge/Chargex number to (with expiry date and signature) to ETI Books, Unit 6, 25 Overlea Blvd., Toronto, M4H 1B1.

ALPHA . TUNER . SERVICE

Fast Coast to Coast Tuner Repair Service

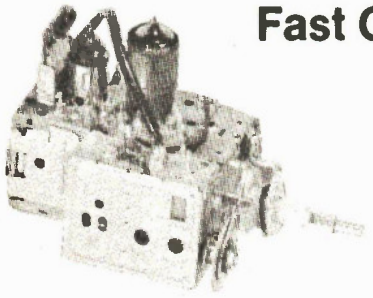

We provide a fast top quality tuner service to help you make a profit. Repairs to all makes and models at competative prices. Domestic or import, tube or transistor. All repairs are serviced by trained technicians, using only top quality components. Tuner repair is our specialty and our only business.

- VHF or UHF $13.95
- Varactors $13.95
- FM Tuners $15.95
- UV Combo $21.95
- Parts and workmanship carry full 12 months warranty.

Charges for major parts and shipping charges are billed at cost (dealer net). Mail or bring your tuners to our Montreal head office.

ats electronics

3226 6th Street, P.O. Box 172,
Chomedey, Laval, Quebec H7V 3P5 (514) 681-0501

Number One ETI CIRCUITS

The first in a new series of 'ideas books' for the experimenter

Contents

ALARMS

Basic Alarm
Photo Intruder Alarm
Intruder Alarm
Photo Electric Relay
Low Temperature/Lights out
Temperature Sensor
Coolant level
Water Level
Electronic Lock
Car Battery Watchdog
Simple Car Alarm
Simple Lock

AMPLIFIERS & PREAMPLIFIERS

High Input Impedance
High Impedance Buffer
Low Output Impedance
High Input Impedance
Low Frequency Extender
Virtual Earth Preamp
IC Tape Head Preamp
Simple Stereo Tape Player
2.5 Watt
20 Watt Slave
10 Watt
Loudspeaker Microphone
Voltage Controlled Amp
Wide Band Amplifier
Video Power Amp
Broadband Amp

SIGNAL PROCESSORS

Fuzz Box
Guitar Fuzz
Fuzz Box
Waa Waa
Disco Autofade
Simple Autofade
Information Transfer
Optical Pulse Conditioner
TV Sound Pickoff
Crackleftree Potentiometer
Voltage to Frequency
Sine to Square Wave
Precision AC to DC
Voltage Processor
Universal Meter
Double Precision
Fast Half Wave
Simple Chopper
Noise Rejecting SCR Trigger
Phase Shifter

SIGNAL GENERATORS

Simple
Variable Duty cycle
Fast Edge
FET
Improved Multivibrator
Variable Duty cycle
Stable R C
Cheap (CMOS)
Simple TTL XTAL
Uncritical XTAL
Pulse
Zero Crossing
Simple Pulse
Needle Pulse
Stable Linear Sawtooth
Zener
Noise
Pink
Simple Relaxation
Triangle with independent slope
Exponential
Widerange Multivibrator
Multiple Waveform
Linear Sweep
Step Frequency
Beeper
7400 Siren
Simple Siren
Ship Siren
Two Tone
Toy Siren
Kojak, Startrek, Z Cars
Sound Effects
Sound Effects

FILTERS

Bandpass
Low & High Pass
Rejection Notch
Bandpass
Cartridge EQ & Rumble
Hum Stopper
Tape Hiss Reduction
Simple Crossover

DIGITAL

Thermometer
Heads or Tails
Binary Calculator
Voltmeter
Seven Segment to Decimal Die
Random Binary
CMOS Die
Multiplexer Hints
Learning Memory
CMOS Clock

POWER SUPPLIES

Constant
Temperature Stable
Constant
Voltage Controlled
Precision Voltage Divider
Dual Polarity
Simple Balanced
Voltage Divider
Low Regulated
Short Circuit Protected
Simple TTL Supply
ZN414 Supply
Stable Reference
Transformerless Invertor
DC to DC AC
Voltage Multiplier
Automobile Convertor
Shaver Adaptor
DC-DC
High Voltage From Battery
Variable + ve or -ve output
Simple
12V from Battery Charger
Bucket Regulator
Adjusting Zener Voltage
Variable Zener
Zener Boosting of Regulators
High Power
Electronic Fuse
Better Fuse
Regulator & Fuse
Fast Acting
SCR Crowbar
Voltage Polarity
NI CAD Discharge
Current Limiting

TEST

Diode Checker
GO NO GO Diode Tester
Zener Check
GO NO GO Transistor Tester
Quick JFET Test
Current Gain Tester
Basic Transistor Tester
Simple Transistor SCR
SCR Tester
Crystal Check
Crystal Checker
Good/Bad Battery Tester
Battery Tester
Op-Amp Tester
Op-Amp Checker
Cheap Logic Probe
Audible TTL Probe
Audible Slow Pulses
Logic Probe
Logic Analyser
I and O Display Probe
Simple High Impedance Voltmeter
Audio/RF Tracer
Thermocouple Thermometer
Metering Stabilised supplies
Simple Frequency Meter

TIMERS & DELAYS

Low Standby Drain
741 Timer
Self Triggering Timer
Pulse Timer
Pulse Delay
Voltage Controlled Monostable
Sequential Relays
Door Chime Delay

SWITCHING

Touch Triggered Bistable
Touch Sensitive Switch
Electronic Switch
Sound Operated 2 Way
SPST Switch Flip Flop
Two Signals on one Wire

INDICATORS

Line-o-Light
3 Step Level
Light Level
Bargraph Display
Fuse Failure
Blown Fuse
Back Up Lamp
DC Lamp Failure
FM Tuner Station
Current Flow
Disco Cue

FLASHERS

Dancing Lights
Low Frequency Strobe
Flasher
Ultra Simple

POWER CONTROL

LDR Mains Control
Floodlamp Control
Zero Crossing Sync
Train Controller
Low Differential Thermostat
Simple Temperature Control
Full Wave SCR Control

AUTOMOBILE

Brake Lamp Failure
Courtesy Light Delay
Simple Hazard Light
Light Extender & Reminder
Four Way Flasher
Headlamp Dipper
Wiper Delay
Suppressed Zero Voltmeter
Rev Counter/Tachometer
Auxiliary Battery

DETECTORS & COMPARATORS

Peak Detect & Hold
Window Detector
Peak Program
Positive Peak
Reaction Comparator

RADIO FREQUENCY

Crystal Marker
100 kHz Marker
RF Voltmeter
RF Detector
LED RF Indicator
RF Amplifier Protection
FET-Radio
Op-Amp Radio

MISCELLANEA

Phase Locked Loop
Touch Doorbell
Phase Lock Control
Audio Mixer
Virtual Earth Mixer
Plop Eliminator
Loudspeaker Protection
Digital Capacitance Probe
Digital Tape Recorder Adaptor
Breakdown Diode Substitution
Dual Function Charger
Dual Mode Amp
Capacitor Substitution
Electronic Capacitor
Speeding Up Darlingtons
Shutter Saver
Thyristor Sensitivity
Sound Operated Flash
Strength Tester
Logic Noise Immunity

TIPS

Identifying 74 Series
Supply Pins
Soldering IC's
Tinning With Solder Wick
PCB Stencils
Front Panel Finish
DIL Drilling
Fluorescent Starting
Avoiding Insulated Heat Sinks
TTL Mains Interface
Boost Your Mains
High Resistance on Low Meters
High Voltage Electrolytics
Transistor Identification
Template & Heat Sink for Power Transistors
Transistor Socket
Solder Flow Problems
Odd Resistor Values
Resistors in parallel
CMOS DIL Handling
Identifying Surplus ICS
Extending Battery Life
Battery Snaps
Power Supply or Battery
Battery Checking
Muck Remover
Transformers in reverse
Loudspeaker Checking
Improving UJT Linearity
Signal Tracer
Crystal Earpieces
Cheap Varicaps
Zener Lifts Capacitor Rating

DATA

741 Op-Amp Data
BC 107-109 Data
BC 177-179 Data
CMOS & TTL Data
2N3055 Data
MJ2955 Data
Bipolar Data Tables
Bipolar FETs Rectifiers
Diodes Pinouts Zener Misc

SEND $5.00 TODAY
To: ETI Circuits, ETI Magazine
Unit 6, 25 Overlea Boulevard
Toronto, Ont. M4H 1B1

QRM QRM QRM

Bill Johnson, VE3APZ thinks that the RSO is barking up the wrong mast with their $16000 repeater proposition.

FOR MANY YEARS, the 'amateur radio operator' was understood by the masses to be somebody who hid himself away in a little room somewhere in the dark depths of his basement and soldered away at little pieces of bent wire and glass contraptions that went all white and powdery inside at the slightest provocation. Over the years, there has, of course, been a gradual improvement in the state of the art, and as components became more and more available most amateurs abandoned the time-honoured and traditional methods of building their own capacitors and resistors and used instead store-bought types. Although I cannot claim to have been a chronicler of those times, I would hazard a guess that their contemporaries felt that they were discrediting the art and watering down the fraternity.

In recent years, we have seen a similar move from making one's own to buying the store-bought variety. It is not, however in the component field, but in the complete transmitter or receiver that this is happening. There are very few amateurs nowadays who build their own equipment as a matter of course. There are many reasons for this. One is the tremendous increase in commercially built amateur radio equipment that is available from manufacturers whose costs for making such equipment have diminished by modern advances. Another is the apparent stabilisation in the state-of-the-art as it is applied to the shortwave end of amateur radio — there are very few new advances for those experimentally-minded to play with and most are just happy to buy a completely assembled station and satisfy their need for experimentation by building station accessories.

Historically, there has been a definite cycle to amateur radio activity in a particular part of the radio spectrum. It starts out by the experts of the day coming forth with complete and irrevocable proof that their exists no hope of finding any useful properties of radio waves in that part of the spectrum. Then a few amateurs look at the band that has just been allocated to them by the government since nobody else knows what to do with it. They try a few tests, and find that they can 'get out of their backyard' on the band, and try to get farther afield. They write to amateurs in another country, generate interest, and get them to build some equipment for the band. These distant amateurs then try sending signals to one another, and lo and behold they find that they have got a very good and reliable means of communication. Then the commercial interests wake up, say they really discovered the band, and put forth lobbies to the government of the day for frequencies in the newly-discovered band. They take over the band and crowd out the amateurs, thus forcing them to look elsewhere, and the cycle starts all over again.

There is a slight difference in the moves we are seeing now and those of our forefathers. Very often in the early days of radio, amateurs were forced to move on and lost the use of the bands that they left. Today, we are overcrowding the shortwave bands but moving far too slowly to discover new bands in the VHF-UHF section. The reason is that we are becoming very comfortable in our daily use of the shortwave and VHF bands. We start our daily routine by going to the basement and working a few new countries on our 1 kilowatt HF station (and if we can't increase our number of countries then a bigger, better antenna is called for).

Many years ago, several amateurs in various parts of the country (USA included) took the bull by the horns and started tinkering with a totally-unexplored phenomenon known as FM. They set a dangerous precedent when they deviated from the pattern of the exploration of previous bands by using techniques and equipment that were surplus to commercial needs without any modification of any sort, save for the simple (in most cases Nobby) 'padding down' of the equipment to operate in the two metre band. They (myself guilty also) broke the tradition of being the first ones there and fell into the comfortable trap of easy, reliable communications in the city. They realised the shortcomings of VHF namely, line-of-sight was the rule rather than the exception, and the experimenters among them designed and built the first repeater stations. I was involved in the construction of VE3RPT Canada's first repeater, and at the time thought nothing of the dire predictions of the club bulletin editors who foresaw the trap we were falling into. As the ease of operation of two metre FM became apparent and people realised that they no longer had to worry about such details as suppressing the ignition system to go mobile (FM eliminates this), people stopped looking at the operators of 2m FM as FM freaks and joined them in hordes as commercial interests gave up their wideband sets for something more modern and equipment became readily available. Even more readily available was a few years later was the imported Japanese equipment which was far infer-

ior in quality at first but soon perked up with the huge influx of research dollars which came from unexpected growth in sales. Amateurs were biting the bait.

Nowadays, we have amateurs by the thousands on 2m FM., some of which came to 2m soon after getting their first licence and don't realise what the bulk of amateur radio is all about. Clubs have put up repeaters for their own local use without regard for the overall picture of two metre activity and the needs of amateurs in general, so much so that the 2m band is full of repeaters that take up an allocated channel and are hardly ever used.

Another trap that was fallen into was that for a few years the users of the new band were regarded as 'faddists', and the new band was given just a few years before it petered out, so that the Provincial organisations were not interested in it. The result of this was that a whole new facet of amateur radio evolved on its own, and when the numbers were large enough to be of interest to provincial radio socities they came into the picture trying to organise and control this aspect of the hobby. Their lack of expertise in the subject caused much disorganisation and their rejection as organisers of this part of the hobby, since, in the interim, 2m FMers had organised themselves of need into regional 'repeater councils' to co-ordinate the growth of the band. The provincial societies gracefully bowed out of the picture and kept a low profile on FM.

They did, at least until recently. At the RSO convention's annual convention in London in October last year, they announced that they are going to sponsor a repeater. It is not as if Ontario needs another repeater, or has the spare frequencies to support one. It is not as if there are not other repeaters in the area that do not provide adequate coverage. It doesn't, it hasn't, and there are plenty. Furthermore, the RSO is proposing to build this repeater totally from brand-new solid-state commercial equipment. It is not that the site proposed is a downtown high-intermod area that needs the superior rejection of state-of the-art receivers — it is to be located in a remote part of rural Ontario. And, worse still, the budget for the repeater is $16000!

As one who has been intimately involved with 2m FM for ten years, I cannot support such a proposition. Ontario has several excellent wide-coverage repeaters in the area and I can see no reason for another. Instead of leading the way into better use of higher frequencies, the RSO has fallen into the trap of convenience and easy communications.

We have received several letters from readers about this column and opinions on various amateur topics in general. While space hasn't permitted their inclusion this month we certainly will publish a few of the more interesting ones in forthcoming issues.

Send your comments, opinions and threats to: QRM Letters, ETI Magazine, Unit 6, 25 Overlea Boulevard, Toronto, Ontario, M4H 1B1. Sorry, we cannot accept obscene phone calls during regular office hours.

Specially Imported for Canadian Hobbyists:

Another Circuits Book:

'CA3130'

50 Projects Using IC CA3140

By R. A. Penfold
96 pages

Published in the UK
in February 1977

- About the IC
- Audio Projects
- RF Projects
- Test Equipment
- Household Projects
- Miscellaneous Projects

$2.85 (Size 7 1/8" x 4 1/4")

Price includes postage and packing.

Send order with cheque or Chargex/Mastercharge number (with expiry date and signature) to:

ETI Books, Unit Six, 25 Overlea Blvd., Toronto, M4H 1B1.

Shortwave Antennas

John Garner discusses what to connect to the antenna terminals.

FIRST OF ALL, let me express my best wishes to all for a good year in 1979. With the propagation conditions improving over the past few months, it looks as though this year will be a good one for short wave listening. For those who have not given short wave listening a try yet, now is a good time to join the hobby's ranks. So, once again all the best for 1979.

As promised in last month's column we will begin discussing briefly some of the basic antenna designs used by short wave listeners. Also this month we will begin an equipment review section — this section will mainly deal with news of recent products which have been introduced to the short wave market. Most of the information will be supplied by the manufacturers.

I wish to express my thanks to the now defunct Radio Canada Shortwave Club for much of the antenna information in this month's column.

THE WHIP ANTENNA

This type of antenna is the answer to the antenna problem for a great number of listeners who live in apartments or in cities where they do not have enough space to put up any other type of outside antenna, since it is one of the simplest to erect. It can be made either from an automobile antenna, or from a length of small diameter piping. When properly placed it can give very good results. Like any other antenna it should be erected as high as possible and away from any obstructions. Therefore the best place to put it would be either on the roof, the chimney or on a high pole. This type of antenna is omni-directional which means that it will receive signals equally well from any direction. However, if it is placed on a window sill or along side a building this will of course impair its reception qualities, due to the large mass of the building along side it. The lead-in for this type of antenna can be either a shielded co-axial type or the normal insulated wire. If the listener lives in an area where the noise level is not too high, there can be some advantage in using the normal insulated wire as a lead-in since this, in effect, is similar to increasing the length of the antenna. Figure 1 shows a typical installation of this type of antenna on a pole. Under normal reception conditions the whip antenna will give very good results. However since it is a vertical antenna it is also very responsive to atmospheric and man-made noise.

Fig. 1 — The whip antenna.

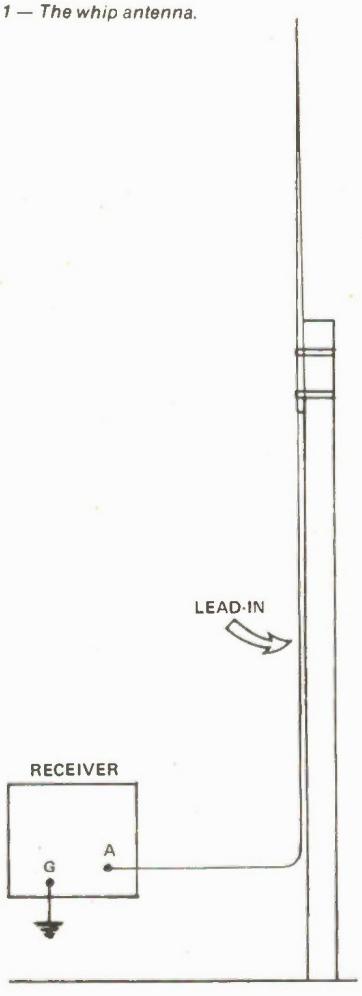

THE VERTICAL ANTENNA

The Vertical antenna is another example of an omni-directional type. It is a simple long wire antenna anywhere from 20 to 60 feet long supported vertically. It can be hung from the overhang of the roof of the house or supported by a pole or hung from the branch of a convenient tree. As with other antennas, if a tree is used it would be advisable to use a pulley and counterweight arrangement to allow for the sway. (see Fig. 3) The lower end of the antenna should be securely anchored to the ground. The lead-in should be attached to this end of the antenna and then run into the receiver. One advantage to locating the antenna up the side of the house is that the lead-in would be, in this case, very short. This would then keep the amount of noise pick-up down to a minimum. However it should be born in mind that, the proximity of the antenna to the house, in this type of an installation, is likely to greatly affect its omni-directional properties. This problem can be solved however by installing the antenna away from any obstructions and then using a shielded lead-in to the receiver. Figure 2 shows a typical installation of this type of antenna.

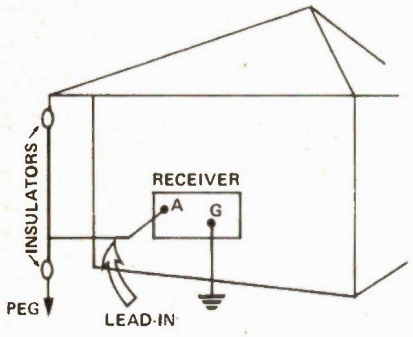

Fig. 2. — Vertical antenna.

THE INVERTED "L" OR MARCONI ANTENNA

This type of antenna is also omni-directional and therefore can be built to suit the available space. A look at Fig. 3 will show why this antenna has got the name of the Inverted "L". This is probably the type of antenna used by most SWLs even though they don't know the name of it. The horizontal section should be about 45 to 50 feet long made of stranded copper, if possible, in order to give it strength and be securely supported at either end. The down lead can be of the same type of wire as the antenna, but in this case it is advisable to have insulated. This will prevent the signal from being shorted to ground should the wire accidently touch the building. Should one, or both ends of the antenna be attached to trees or some other suport that is likely to sway in the breeze, it is advisable to have a pulley and counterweight arrangement at one end. This will prevent the antenna from sagging or tightening too much, and so prevent any likely breakages. The lead-in should be connected to the end of the antenna that is nearest to the receiver, and this will therefore keep it as short as possible.

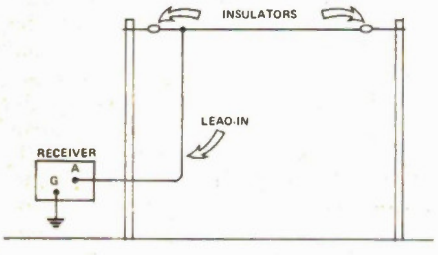

Fig. 3a. Marconi inverted "L" antenna.

THE WINDOM ANTENNA

This antenna got its name, Windom, after the first experimenter to use and write an article about it. It is a directional type of antenna, and reception is best when the antenna is broadside-on to the incoming signal. The length of the antenna is a half wave length and is cut to the lowest frequency band to which the antenna will be used. The length therefore is determined by the expression: L = 468/F, where "L" is the required length of the antenna in feet, and "F" is the required frequency in megacycles per second (MHz).

It is important that the lead-in be connected at the proper position on the antenna and this should be at 1/3 of the antenna length from one end. Since the down lead should also be kept as short as possible, it therefore follows that it will be best if the lead-in is connected one third from the end of the antenna that is closest to the receiver. Figure 4 shows a typical installation of this type of antenna. Again, the lead-in can be made from the same type of wire as the antenna but it should be insulated to prevent it from shorting to ground. The antenna should be hoisted as high as possible and the lead-in should be allowed to drop freely from it, for as great a distance as possible, before any bends are made. A Windom antenna suitable for use from 10 to 80 meters, that is, through all the international shortwave bands would be 126 feet long and have the lead-in connected at 42 feet from one end.

Next month we will discuss some of the various types of the popular dipole antennas. If you have any questions about the world of shortwave, write to Shortwave World, P.O. Box 142, Thunder Bay, Ontario, P7C 4V5.

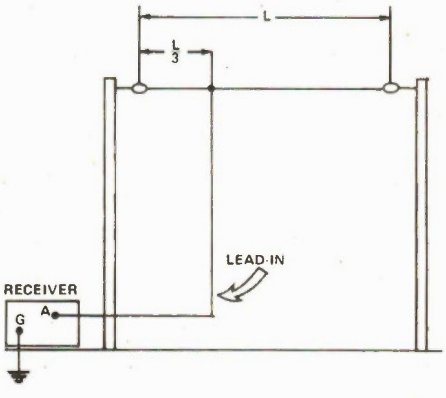

Fig. 4. Windom antenna.

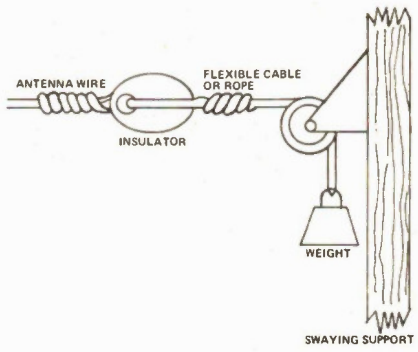

Fig. 3b. What to do with a swaying support.

PRODUCTS

There have, no doubt, been more new shortwave receivers placed on the market during the past year than in any other year. And these sets are mainly in the more advanced class — many with digital frequency readout. The cost of most is also quite reasonable considering the quality of the set.

This month we will take a look at Panasonic's short wave line.

PANASONIC

Panasonic's parent company, Matsushita Electric, celebrated their 60th anniversary in 1978 and have grown from 1 man and 1 product to a multi-national corporation employing 100,000 people with over 10,000 products including, besides short wave receivers, AM and FM radios, television, tape recorders, stereo equipment, micro-wave ovens, CB rigs as well as batteries which are always supplied with portable Panasonic equipment. At the present time Panasonic are expanding their Canadian offices and manufacturing facilities.

COMMAND SERIES

Panasonic manufactures four receivers of interest to the Short Wave Listener. Three of these are in their Command Series which was introduced into Canada about eight months ago. There are many similarities between these three sets. I bought an RF-2800 while on vacation last summer and have enjoyed it very much since then. I can highly recommend it as a portable receiver or for general short wave listening pleasure.

RF-2200 — This 8-band receiver (AM, FM & 6 SW bands from 3.9 to 28 MHz) features Direct-Readout Mechanism. The main tuning dial and bandspread

dial are precisely interlocked by the all-gear drive system eliminating annoying backlash. Two crystal markers (125 kHz and 500 kHz) and the band-spread dial marked into 10 kHz segments make tuning this set very easy and accurate. Other features are: RF gain control, gyro antenna, 3-way meter and separate bass/treble controls.

Dimensions — (H × W × D) - 18.8 × 31.8 × 10.0 cm. Weight — 3.4 kg or 7 1/2 pounds (with batteries). Canadian list price — $269.95.

RF-2800 — This is a 5-band (AM, FM, & 3 SW bands from 3.2 to 30 MHz) portable receiver with Direct-Readout Digital Display. The LED frequency display assures accuracy to 1 kHz. A conventional dial is also included and this dial must be used for AM and FM since these are not shown on the digital display. The all gear drive system makes for exact tuning without backlash. Also featured are wide/narrow bandwidth selector, RF gain control, BFO pitch control, tuning/battery meter, two tuning speeds, digital display on/off selector, AFC on FM, separate bass/treble controls and much more.

Dimensions — (H × W × D) — 24.6 × 36.1 × 12.0 cm. Weight — 3.9 kg or 8 lb. 10 oz. (with batteries). Canadian list price — $389.95

RF-4800 — This 10-Band (AM, FM & 8 SW bands from 1.6 to 31 MHz) Communications receiver combines every feature you would expect to find in a fine radio. Features such as direct-frequency readout with electronic digital display on short-wave, precise down to 1 kHz. Features such as the frequency-linear variable capacitor and the equal band width for all SW bands (approximately 4 MHz). The all-gear drive mechanism, selectivity assured by the double superheterodyne system. The tuned RF amplifier has a 3-gang variable capacitor for improved senstivity. Cross-modulation is reduced by FET technology and and RF gain control. Other features include 2-speed tuning, BFO pitch control, IIL circuitry (for operation on self-contained batteries at only 1/40 regular power consumption), RF gain control, ANL circuitry, antenna trimmer . . . in short, just about everything you want.

Dimensions — (H × W × D) - 20.0 × 48.2 × 35.4 cm. Weight — 9.0 kg or 19 lb. 14 oz. (with batteries). Canadian list price — $699.95.

GENERAL

All of these receivers are of the Double Superheterodyne type, with IFs of 2 MHz and 455 kHz. The IF on AM (also on SW 1.6 — 3 MHz on the RF-4800) is 455 kHz. The FM IF is 10.7 MHz. Calibration on the RF-2200 is by two crystal markers and on the RF-2800 & RF-4800 is by an adjustable knob. The 2200 & 2800 have a 7-step telescopic whip antenna and provisions for external antennas. All three models have built in ferrite antennas for AM reception.

The sets use an internal 10 cm (4") speaker with jacks for an external speaker or earphones. All may be operated on 120 V 60 Hz AC or on DC (batteries are supplied with the set) — the RF-2200 uses 6 V DC (4 D size batteries); the RF-2800 — 9V (6 D cells); the RF-4800 — 12 V DC (8 D cells).

These Command Series receivers were on display at the Panasonic booth at last year's ANARC (Association of North American Radio Clubs) convention in Montreal and were kept busy all week-end by eager listeners. They performed very well and it was from this display that I decided to buy my RF-2800. I have not regretted it.

The other Panasonic short wave receiver is the RF-8000. I will save the discussion of this fine receiver until next month. I will just mention that Panasonic advertise the RF-8000 as . . . "A portable radio that costs the earth But it gives you the world."

Until next month 73 and good listening.

Primes and Goldbach

This issue two programs, one dealing with determining whether a number is prime and the second which investigates the intriguing Goldbach conjecture. Contributed by Ken Newman of Willowdale, Ontario.

THIS PROGRAM, written for the HP-25, finds the prime factors of a positive integer. The algorithm itself is nothing new; what is significant is that a quite efficient version can be compacted into the HP-25's small 49-step program memory, essentially using only 5 of the 8 data memories.

How long would it take you to find the prime factors of 5028435 or 206981 on a non-programmable? The answers are 3, 3, 5, 131, 853 (1 minute, 22 seconds) and 263, 787 (2 minutes, 28 seconds) respectively using this program. Is 658321 prime? Yes (7 minutes 32 seconds).

HOW TO USE

After entering the program and resetting to 00 by pressing f PRGM in RUN mode, operation is simple; just enter the number and press R/S. The program can be made to halt or just pause on each prime factor it finds, depending on whether step 37 is R/S or f PAUSE. If it is made to halt, pressing R/S again will resume execution. After all prime factors have been found, the program displays the contents of memory R7, which I set beforehand at 1111111111; this is useful because it is a positive indicator that the program is finished, in case you lose track. Now to try a new number just enter it and press R/S again, and so on. (If the number entered was prime, the number itself will appear as the answer).

METHOD

The program simply divides the integer that was entered by 2, then 3, 5, 7, 9, etc. (for all odd numbers) and examines the remainder. If it is zero, the division was exact and the division is displayed; otherwise the division is stepped up and so on until the division exceeds the square root of the original integer at which point whatever is left must be prime and is displayed. A major contribution to the algorithm's efficiency is that when a prime factor is found, it is divided into the original integer and this quotient becomes the new integer to be factored, while the division sequence does not restart at 2 but continues where it left off.

With regard to invalid input, the program doesn't screen input, but will not go into an infinite loop; it'll either show 'Error' (negative input) or give erroneous answers (numbers with fractional parts, the numbers 0 or 1 etc.). This is quite unimportant in this case.

The compactness of the basic algorithm makes it useful as a 'subroutine', as will be shown below.

GOLDBACH CONJECTURE TEST

This program is esentially the same as the prime factors program, i.e. the basic algorithm is used as a 'subroutine'. The Goldbach conjecture is that every even integer greater than 2 can be expressed as the sum of two prime numbers. This program will split any even integer greater than 4 into two primes (if possible. if you find a counterexample to the conjecture using this program, you'll become famous quite quickly!)

USE

To express x as the sum of two primes, a and (x–a), enter (x–2) STO 5 R/S; (x–a) will be displayed when the program stops, and pressing RCL 6 will give a. If R/S is pressed again, the program will automatically work on the next even integer (i.e. x+2); alternatively, another different even integer can be entered, etc.

Example: for x=214586; enter 214584 STO 5 R/S. Display will show 214519; pressing RCL 6 gives 67. Therefore 214586 = 214519 + 67, and 67 is the smallest number 'a' such that (x–a) and a are both prime (time was 10 minutes 35 seconds; try it without the program!). In general the program will take a bit of time since possibly many (large) numbers must be tested for primeness. The program just keeps trying pairs of numbers for primeness, starting at 3 and (x–3), then 5 and (x–5), etc. (the case 2 and (x–2) only works for x–4). As soon as a factor of either of the numbers in the pair is found, the pair is discarded and the next pair is tried.

NOTES AND LETTERS

There are a number of notes to be made on recent Softspots:

First, our apologies to Thomas E Hutchinson, whom we neglected to credit with the contribution of last month's Nim program.

Next, a note about the note in November regarding Easy Mortgage Math. The $(1=i^*)$ should of course have been $(1+i^*)$ which is raised to the -12t power.

Well, we *knew* someone would send us a note about Stirling's approximation as an alternative to Barry Lalonde's factorial program, the first being Glenn Rowe. For large numbers:
$n! \approx n^n e^{-n} \sqrt{2\pi n}$, which gives:
$\log(n!) \approx \frac{1}{2}\log(2\pi n) + n \log(n/e)$. Glenn also pointed out that the product does

not include zero. (Thanks, we weren't sure!).

Finally, Randall Chamberlain, determined to find *the* proper solution to the optimum box problem (Nov 78) did it by elementary calculus, and claims it's faster. If you let the volume $V=(a-2x)(b-2x)x$ then the optimum x value is: $x=(a+b-\sqrt{(a+b)^2-3ab})/6$. You can work out the program yourself!

Address contributions and letters to: ETI Softspot, Unit 6, 25 Overlea Blvd, Toronto, Ontario M4H1B1.

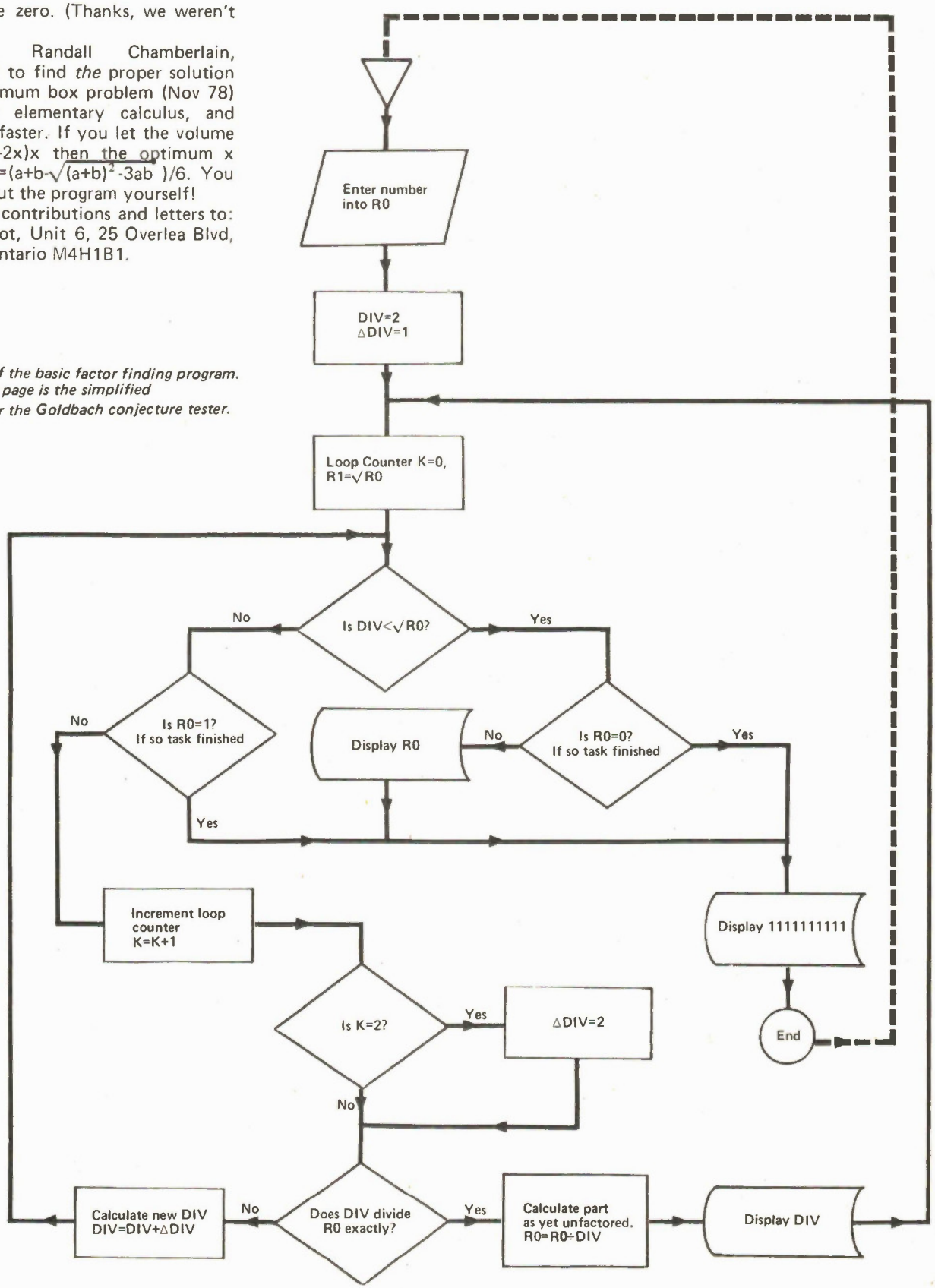

Flow chart of the basic factor finding program. On the facing page is the simplified flow chart for the Goldbach conjecture tester.

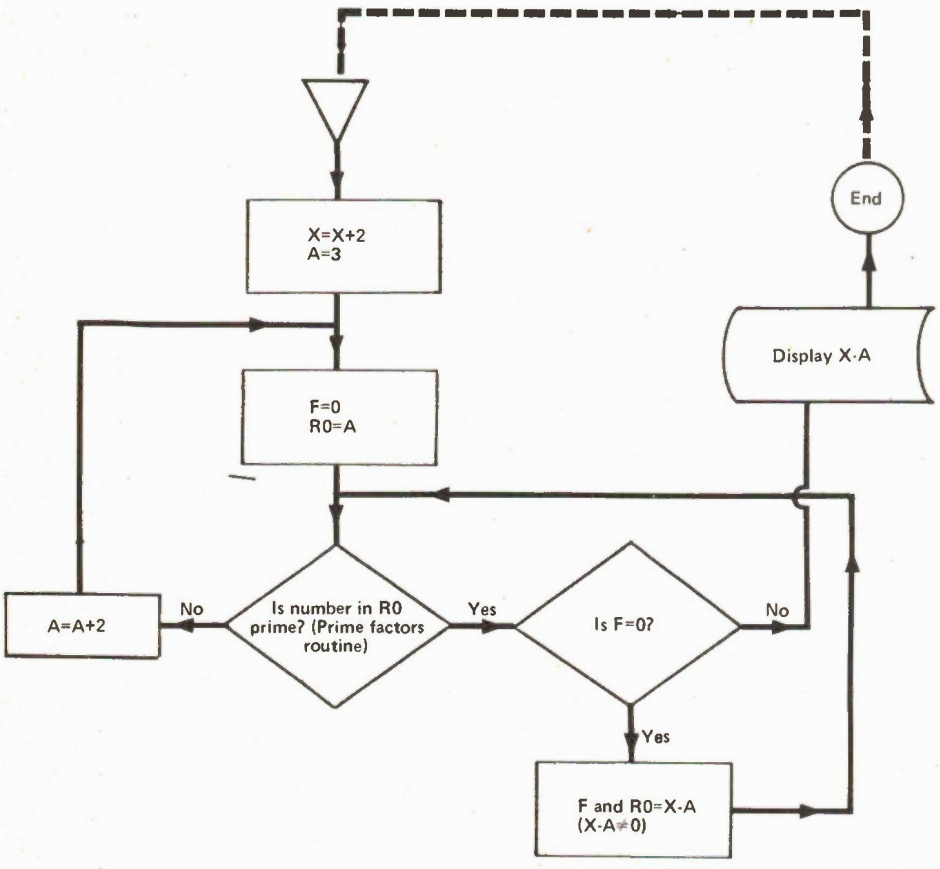

PROGRAM for the prime number testing program. It is written for the HP25 calculator.

1	23 00	STO 0	30	71	÷		
	01	1		15 01	g FRAC		
	23 02	STO 2		15 61	g x≠0		
	02	2		13 12	GTO 12		
	23 03	STO 3		14 73	f LAST x		
	00	0		23 00	STO 0		
	23 04	STO 4		24 03	RCL 3		
	24 00	RCL 0		74	R/S		
	14 02	f√x		13 06	GTO 06		
10	23 01	STO 1		24 00	RCL 0		
	13 14	GTO 14	40	01	1		
	24 02	RCL 2		14 71	f x=y		
	23 51 03	STO+3		13 45	GTO 45		
	24 03	RCL 3		21	x ⇄ y		
	24 01	RCL 1		74	R/S		
	14 41	f x<y		24 07	RCL 7		
	13 39	GTO 39					
	24 00	RCL 0					
	01	1					
20	14 71	f x=y					
	13 45	GTO 45					
	23 51 04	STO+4					
	24 04	RCL 4					
	02	2					
	14 61	f x≠y					
	13 28	GTO 28					
	23 02	STO 2					
	24 00	RCL 0					
	24 03	RCL 3					

PROGRAM for the Golbach testing program.

1	02	2	30	13 32	GTO 32		
	23 51 05	STO+5		23 02	STO 2		
	03	3		24 00	RCL 0		
	23 06	STO 6		24 03	RCL 3		
	00	0		71	÷		
	23 07	STO 7		15 01	g FRAC		
	24 06	RCL 6		15 61	g x≠0		
	23 00	STO 0		13 19	GTO 19		
	01	1		02	2		
10	23 02	STO 2		23 51 06	STO+6		
	02	2	40	13 05	GTO 05		
	23 03	STO 3		24 07	RCL 7		
	00	0		15 61	g x≠0		
	23 04	STO 4		13 00	GTO 00		
	24 00	RCL 0		24 05	RCL 5		
	14 02	f√x		24 06	RCL 6		
	23 01	STO 1		41	−		
	13 21	GTO 21		23 00	STO 0		
	24 02	RCL 2		23 07	STO 7		
20	23 51 03	STO+3		13 09	GTO 09		
	24 03	RCL 3					
	24 01	RCL 1					
	14 41	f x<y					
	13 41	GTO 41					
	01	1					
	23 51 04	STO+4					
	24 04	RCL 4					
	02	2					
	14 61	f x≠y					

A remarkable breakthrough creates an incredibly unique and distinctive gift

Pen Chron

The first LCD chronograph pen

The miracle of ultra-miniature electronic technology is brought to its fullest in the shape of this beautifully crafted pen.

Within its slim sculptured case is a quartz crystal timepiece of extraordinary capability that is *accurate to within fourteen seconds a month.* The brilliance of the liquid crystal, alpha-numeric readout has already set new standards for excellence of clarity in the industry. From its wide display, 6 extra large digits continually show **Hours, Minutes, and Seconds.** At the touch of a button, the **Month, Date, and Day of the Week** appear.

Touch a button again, and the electronic timepiece instantly becomes a **Stopwatch** *able to time an event to within a 100th of a second.* A **Lap time** feature lets you measure an interim period, then return to stopwatch time.

While the concept of such a sub-miniature watch module is mind boggling, what is truly revolutionary, is its incredible performance range. You can switch from standard time to stopwatch to lap time without disturbing the respective internal clocks. A **backlight** illuminates the watch for evening use.

On a table, the pen's pocketclip is designed to perfectly position the watch for desktop viewing.

As a gift or for yourself, the Pen Chron is unique and impressive. It measures five and one quarter inches, as do most fine pocket pens. The watch module operates on one long life silver oxide battery. Pen refills and batteries are available from Teknion and wherever these supplies are sold.

Try it for 10 days — at our expense. You cannot believe the quality and elegance of the Pen Chron until you have appreciated its smooth writing comfort, experienced its performance, and enjoyed the compliments it generates. We are so certain you will be satisfied that, in addition to its 90 day parts and labor warranty, we are offering a **10-day, money back guarantee.**

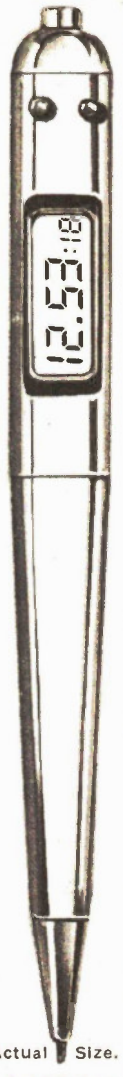

Actual Size.

Brushed Aluminum or Gold Colour

You are looking at the most exciting new product of the season. It's brand new...and the ultimate Gift.

TEKNION

3018 Bathurst St. Toronto, Ontario, M6B 3B6. (416) 787-2811.

Please rush me: (quantity)
..... Pen Chron(s) @ $69.95
total $.....

Method of Payment:
☐Chargex ☐Cheque
☐Mastercharge ☐Money Order
Chargex/MC No. . . . . .
Expiry Date . . . . . .
Signature. . . . . .
Name . . . . . .
Address. . . . . City . . . . . .
Province . . . . . Postal Code . . . . . .
Ontario residents please add sales tax.
ETI

Tech Tips

Tech Tips is an ideas forum and is not aimed at the beginner. ETI is prepared to consider circuits or ideas submitted by readers for this page. All items used will be paid for. Drawings should be as clear as possible, and the text should preferably be typed. Circuits must not be subject to copyright. Items for consideration should be sent to ETI Tech Tips, Unit 6, 25 Overlea Blvd., Toronto, Ontario, M4H 1B1

4 Channel Synthesizer

T. Huffinley

This circuit will synthesize two rear channels for 'quadraphonic' sound when fed with a stereo signal. The rear output for the Left channel, is a combination of the left channel input 180° out of phase, added to a proportion of the right hand channel (also out of phase). The right hand rear output is obtained in a similar way.

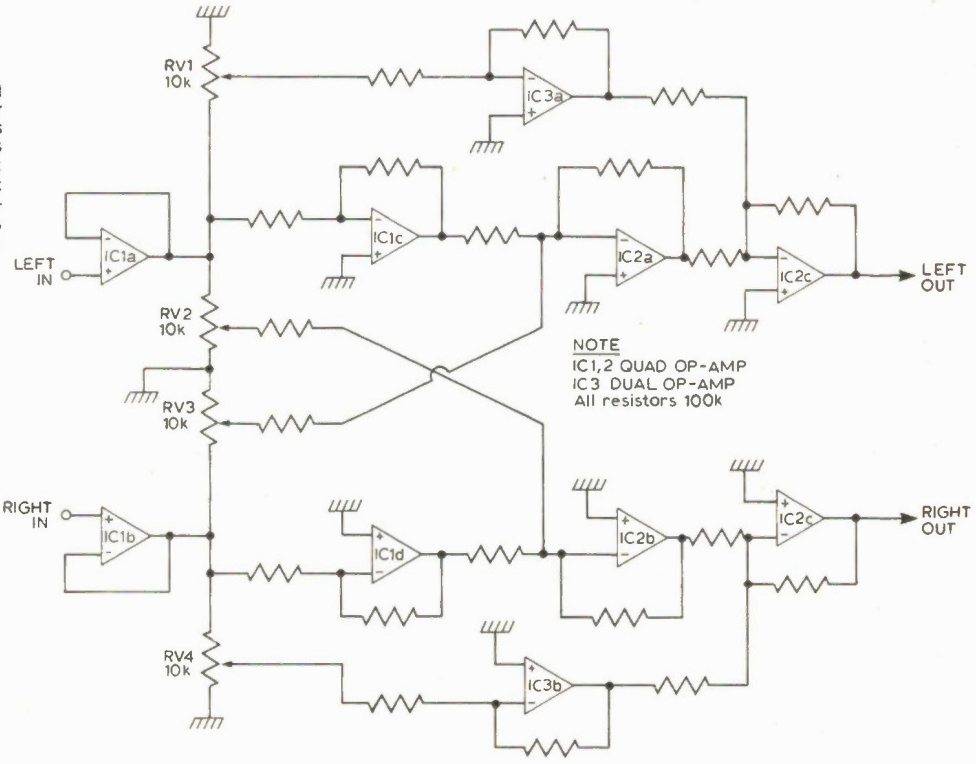

ETI MARKET PLACE

This is our free advertising section for readers who want to buy, sell, publicise, etc. Ads are accepted at our discretion – we will not accept any form of commercial advertising. For repeated insertions mail again. Expect a delay of approximately two months before your ad appears.

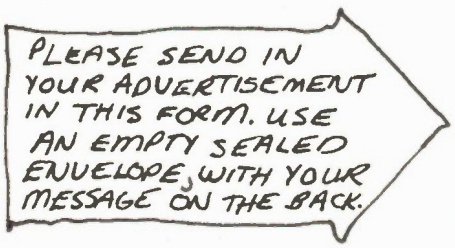

FOR SALE: AMPEX 361 RECORDING TAPE 7" x 3600' (.5 MIL) $4.00 EACH; 6072 TUBE (EQUIV. 12AQ7) .25c; 5726-6050 (EQUIV 6AL5) .10c; COMPUTER TRANSISTOR NPN/PNP .05; SMALL COMPUTER SURPLUS BOARD .15c. A BOISVERT, 4830 DES PERVENCHES, ORSAINVILLE, QUE. G1G 1R7

COMPUTERHOBBYISTS! NEED A PRINTER? TELETYPE IN WORKING ORDER; NO CASE— COLLECTORS ITEM! $75. ALSO: ABSOLUTELY FUNCTIONAL, 30 CPS DAISY-WHEEL PRINTER WITH 200 PAGE SERVICE MANUAL.....$300. PHONE (416) 877-5309 AFTER 6 P.M. — ASK FOR MARK.

WANTED...USED TEKTRONIX SCOPE 2-3 YEARS OLD, 100 MHZ BANDWIDTH, DUAL TRACE, COMPLETE WITH PROBES, X-Y CAPABILITY. BOB HOUSE, P.O. BOX 544, PENTICTON, BC. V2A 6K9.

FOR SALE: MOTOROLA 6800 EVALUATION/TRAINING MICROCOMPUTER. INCLUDES: 6800, 2 x 6810, 6820 ETC., INBOARD POWER SUPPLY, FRONT PANEL, P.C. CONNECTORS (FOR EXPANSION). HUGE, WELL-WRITTEN MANUAL HAS STEP-BY-STEP TRAINING COURSE. COMPLETE SYSTEM: $200. JON SCHMIDT, 14 MARKET ST., GEORGETOWN, ONTARIO. L7G 3B7.

WANTED: SERVICE DIAGRAM OR OP INSTRUCTIONS FOR GLOBE KING WRL 10M-80M TRANSMITTER. A HUDSON, 829 LORRAINE No 1, ARUIDA, P.Q.

CLEANING OUT WORKBENCH! FOR SALE: MOTOROLA 6802-$15; 6820-$5; INTEL 2708 (BLANK)-$7 (QTY. 12); T.I. 2102-1-$.75 (QTY. 10); 3-WINDING, COMPACT XFMRS-10V@2A, 11V@2A, 18V@1A-$6 (QTY. 15). J. SCHMIDT, 14 MARKET ST., GEORGETOWN, ONTARIO. L7G 3B7.

LOOK WHAT YOU'VE BEEN MISSING

Since we started publishing ETI in Canada the circulation growth has been dramatic. That means that there's thousands of our readers who have missed some terrific issues.

The chart shows just the main features and projects in the various issues we have available, but for some months we are selling out fast so you'd better hurry and get your copies now. Just send us $2 (not cash) for each issue you require, to ETI BACK-NUMBERS, Unit 6, 25 Overlea Blvd., Toronto, Ontario M4H 1B1.

FEB 77

Features

THE CN TOWER: MORE THAN JUST A LANDMARK . 22
The technical features in the world's tallest building

BIORYTHM CALCULATOR 24
Find out your condition from a machine!

VCT 31
Can these new devices kill off the op-amp?

555 TIMER APPLICATIONS 35
38 circuits using this popular IC.

YAMAHA B1 REVIEWED 49
Powerful amplifier uses power FETs

SCOPE TEST YOUR CAR 60
Tune your automobile with just a scope

MICROFILE 65
Microprocessors and microcomputers for the hobbyist

Projects

FIVE WATT STEREO AMPLIFIER 16
Use just two ICs to make this project.

PHILIPS LOUDSPEAKER SYSTEM 27
An off the shelf speaker!

REACTION TESTER 52
Measure your reaction time against your friends

SHORT CIRCUITS 55
PATCH DETECTOR
HEADS OR TAILS
SCR TESTER

MAY 77

Features

PROJECTION TV 20
The big silver screen in your home

741 COOKBOOK 28
A thorough look at the Op Amp

CATALOGUE SURVEY 51
A look at what's available from whom, by what

EASIER WAY TO MAKE PCB's 57
How to copy, cut ETI's patterns

CHOOSING A MICROCOMPUTER . . . 60
The choice is in! Contains 5 charts, with

Projects

BURGLAR ALARM 13
Foil-on-window type and motion detector

CERAMIC CARTRIDGE PREAMP 17
Circuits for stereo or quadraphonic

NI-CAD BATTERY CHARGER 43
Safe charging for your Ni-Cad batteries

SHORT CIRCUITS:
BENCH POWER SUPPLY 47
FUZZ BOX 48

STEREO RUMBLE FILTER 54
Eliminate turntable noise

JUNE 77

Features

DIGITAL SOUND SYNTHESIS 16
From monophonic to polyphonic

A GENERATION AWAY 25
Evolution or revolution

MULTIMETER GUIDE 30
Make sure you get what you want

LIQUID CRYSTAL DISPLAYS 40
What goes on behind the screen

INTRODUCTION TO COMPUTERS 44
What's involved and how it's evolved

Projects

G.S.R. MONITOR 12
Learn to relax with this unit

TAPE/SLIDE SYNC 36
Update your slide shows

SHORT CIRCUITS

INJECTOR TRACER 54
METRONOME 56
DRILL CONTROLLER 57

JULY 77

Features

A GENERATION AWAY 2 10
Evolution or revolution

I²L EXPLAINED 17
The new technology

C.B. SUPPLEMENT 27
Techniques and technology

INTRODUCTION TO COMPUTERS 2 40
What's involved and how it's evolved

Projects

MASTERMIND 21
Codebreaking electronic game

DIGITAL VOLTMETER 45
High quality, fast gear

SHORT CIRCUITS
THE OVERLEG 53
TURN INDICATOR CANCELLER 55

SEPT 77

Features

PICKUP PRINCIPLES 20
SCIENTIFIC CALCULATOR REVIEW . . 26
BITS BYTES AND BAUDS 34
INTRODUCTION TO THE OSCILLOSCOPE 2 37
ACTIVE FILTERS 2 56

Projects

AUDIO SWEEP OSCILLATOR 10
Hear it, see it, test it!

SHORT CIRCUITS
SOIL MOISTURE INDICATOR 46
MICROAMP 49
ELECTRONIC BONGOS 51
ALARM ALARM 53

NOV 77

Features

BASIC CONSTRUCTION METHODS . . . 8
MICROBIOGRAPHY 17
LASERS AT PLAY 24
VFETS FOR EVERYONE Part 2 33
CHARGE COUPLED DEVICES 41
BITS BYTES AND BAUDS 50
THE FIRST CENTURY 52

Projects

DIGITAL THERMOMETER 12
SHORT CIRCUITS
THREE-CHANNEL TONE CONTROL . 22
WATCHDOG 28

JAN 78

PROJECTS

ETI CLOCK 21
A circuit IC allows you several options

LED PENDANT 27
Exciting jewelry you can make as a gift

COMPANDER 31
Get simple noise reduction device for the hi-fi constructor

FEATURES

NOISE REDUCTION TECHNIQUES 8
A look at the different systems available

NOISE REDUCTION BY AUTO-CORRELATION 12
A look at the Phase Linear 4000

MAKE PCBS FOR ETI PROJECTS 16
You can make your own boards at home

TRANSMISSION LINES 37
How to get signals from A to B with minimum loss

DATA SHEET 42
The LM2901 Quad RMS to DC converter

CONVERT YOUR TV FOR VIDEO INPUT 48
So you can plug in your video game or computer, without a modulator

BITS, BYTES AND BAUDS 51
Bill Johnson introduces more basic computer concepts

MICROBIOGRAPHY 56
This month the RCA CMOS microprocessor, COSMAC

TECH-TIPS 61
Ideas for Experimenters

FEEDBACK 64
Letters from our readers

FEB 78

PROJECTS

TACHOMONITOR 25
A simple guide to effective gear changing

DIGITAL PANEL METER 29
An accurate digital voltmeter with liquid crystal display

CB POWER SUPPLY 44
A heavy duty design for using your mobile rig at home

FREEZER ALARM 48
A simple way to safeguard against accidental defrosting

FEATURES

THE COMMODORE PET 10
Answers to the questions everyone is asking

ELECTRETS EXPLAINED 20
The magic ingredient of many microphones, cartridges and headphones

CLASS G AUDIO AMPLIFIER 22
A new technique used in the Hitachi Dynaharmony range

DATA SHEET 32
The Intersil ICL7106, 7107 digital panel meter IC

TRANSFORMERS 52
How to choose them, how to use them

BITS, BYTES & BAUDS 57
Bill Johnson's computer introduction

SINCLAIR CAMBRIDGE PROGRAMMABLE CALCULATOR 60
A cheap programmable with conditional branching

TECH TIPS 66
Ideas for experimenters

MARCH 78

PROJECTS

HAMMER THROW GAME 14
An LED & logic version of the olympic sport

TRUE RMS VOLTMETER 22
Using an IC gives high level performance

HOME BURGLAR ALARM 28
A sophisticated CMOS design

FEATURES

EQUALISATION 8
Anne Hanson explains one of the fundamentals of hi-fi

DATA SHEET 37
Super sound sheets strip from TI

THE C20th JUNGLE TELEGRAPH 40
The amateur radio ham's network

BITS, BYTES, AND BAUDS 43
Bill Johnson solves how data computers work

MICROBIOGRAPHY 47
This month a look at the Signetics 2650

ETI SOFTSPOT 55
Software for your programmable calculator

TECH-TIPS 58
Ideas for experimenters

FEEDBACK 63
Letters from our readers

THE FUN OF ELECTRONICS 65
Just for a laugh

APRIL 78

PROJECTS

COMPUTER POWER SUPPLY 28
Build your own 5 Volt 4 Amp supply for the PET

BUCKET-BRIGADE AUDIO DELAY LINE 32
The latest thing for audio experimenters

GAS ALARM 42
Protect your home and your family

FEATURES

AUDIO TODAY 9
ETI's new Geiger kit for kit-bashers

AUDIO TODAY, LETTERS 12
All go for the tasty hole to tax

WE REVIEW THE TRS-80 COMPUTER 15
Radio Shack's personal computer might be in your home soon

FFTs EXPLAINED 22
Don't panic! The Fast Fourier Transform isn't as hard as it sounds

ETI DATASHEET 38
Hybrid IC SN76115 - 5 watt HI-FI amp

ETI SOFTSPOT 47
Atomic decay game and pseudo-random number generator

TECH TIPS 52
Ideas for experimenters

CLUB CALL 61
Let's get ETI's electronics clubs around the world on line!

FEEDBACK 63
Letters from our readers

THE FUN OF ELECTRONICS 65
Just for a laugh

MAY 78

PROJECTS

WHITE LINE FOLLOWER 24
Electronic control for a model car

ADD-ON FM TUNER 29
Can be fitted inside your hifi amplifier or put in its own cabinet

AUDIO FEEDBACK ELIMINATOR 38
A useful unit in any PA system

FEATURES

AUDIO TODAY 10
Issues in audio today, as Wally Parsons sees them

AUDIO TODAY LETTERS 13
Questions and answers on audio and hi-fi

ETI TOOLS CATALOGUE 18
Look here for the hard-to-find tools

FEEDBACK 35
Readers' Letters

THE FUN OF ELECTRONICS 36
Cartoons by Gregor

CLUB CALL 37
Canadian radio, computer, and electronics clubs

DATASHEET SPECIAL 44
A look at common memory chips

MICROBIOGRAPHY 52
A microprocessor overview

ETI SOFTSPOT 56
Things to do with your calculator

The Fun of Electronics

SURE I KNOW SOMEBODY'S BREAKING THE LAW, THE QUESTION IS WHETHER WE SHOULD RELY ON DIVINE INTERVENTION, OR GO STRAIGHT TO THE D.O.C.

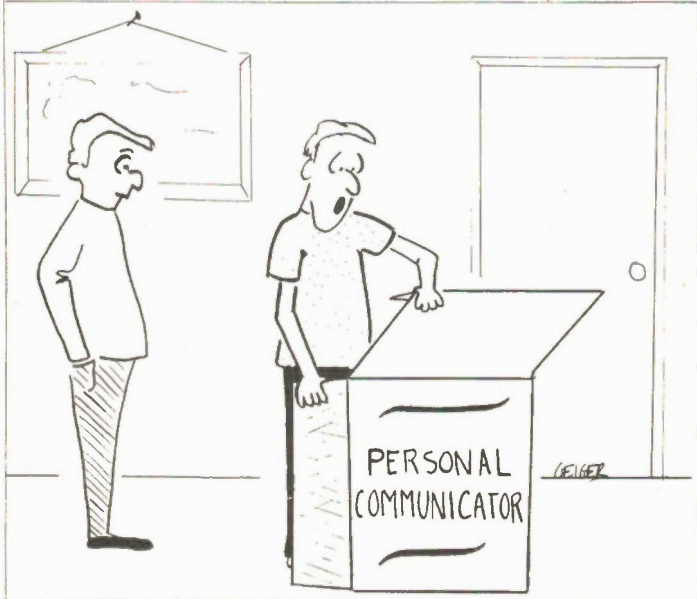

I KNEW I SHOULDN'T HAVE SENT AWAY FOR THIS "BARGAIN COMMUNICATOR", SAM. IT CONSISTS OF FOUR LOGS, A MATCH, A BLANKET, AND A BOOK ENTITLED "HOW TO SEND AND RECEIVE SMOKE SIGNALS".

REMEMBER WHEN YOU TOLD ME WE NEEDED SOME SORT OF FLASHER OUT FRONT TO ATTRACT ATTENTION...

CLASSIFIED

You can write for Eti

75 cents per word

ETI's new classified advertising section allows you to reach 30,000 readers nation-wide. For as little as $15 (there's a 20 word minimum) you can promote your business from coast to coast.

WHAT DO YOU DO?

Send us your typewritten or clearly printed words, your permanent address and telephone number, and your money (no cash please). Make your cheque or money order payable to 'ETI Magazine'. We're at Unit 6, 25 Overlea Blvd., Toronto, Ontario M4H 1B1.

WHAT DO WE DO?

We typeset your words (and put the first word and your company name in bold capital letters).

If we get your message by the 14th of the month, it will appear in ETI 1½ months later. For example, if we receive it by November 14th, you (and thousands more) will see it in the January issue.

NORTHERN BEAR ELECTRONICS

Box 7260, Saskatoon, SK S7K 4J2

Kits for ETI Projects:

EPROM PROGRAMMER (with case) . . . $85.00

CAPACITANCE METER (with case) . . . $55.00

DIGITAL TACH — parts only . . . $55.00

FEEDBACK ELIM (w/pwr supply) . . . $49.95

Request FREE flyer

Add $1.00 P/H. Sask. orders add tax.

NEW PC BOARDS FOR ETI PROJECTS

Boards in stock from Feb. 1977.

482A Cmos Preamp 2s	9.07	638B Prom Prog. PSU	5.30
482B Cmos Preamp PSU	5.95	071 Noise Elim.	1.60
136 Cap. Meter	2.15	Anemometer	3.40
Stars n Dots	8.85	Anemometer Disp.	1.70
638A Prom Prog.	7.80		

Send for full list of P.C. boards for past ETI projects.

B&R Electronics, Box 6326F, Hamilton, Ont. L9C-6L9

AUDIO KITS AND MODULES

60W × 2 Stereo amp with mag. phono amp., tone control unit, speaker protector and power supply $78.00

30W × 2 Stereo power amp. with pre-amp and tone control unit $49.00

10W × 2 I.C. Stereo amp with pre-amp, tone, and power supply $39.00

60W Low T.I.D. power amp $31.00

15W I.C. power amp with tone control unit, power supply and transformer $32.00

FREE CATALOGUE: AUDIOVISION SERVICE, P.O. Box 955, Stn B, WILLOWDALE, Ontario M2K 2T6

RMC. Ceramic 1000pf 1000V. $0.02, ITT. Tantalum 22uf 16V, $0.10, Elmenco Mica 1000pf 500V, $0.05, SEC. 0.25% 0.01uf 100V, $0.10, Elmenco Variable .9-7pf 175V, $0.20, Free flyer & sample on request. **G. Paquette,** 2264 Montée Gagnon, Blainville P.Q. J7E-4H5.

W S I SALES COMPANY

SWL RADIOS - HAM RADIOS -

18 SHELDON AVENUE NORTH

KITCHENER, ONTARIO N2H 3M2

Telephone (519) 579-0536

WRITE FOR GIANT CATALOG FREE OF COURSE!!(VE3EHC)

J & J ELECTRONICS LTD.,

P.O. Box 1437 E,

Winnipeg, Manitoba R3C 2Z4

Semiconductor Specialists

Do you get our bargain flyers? Send $1.00 to receive the current literature and specials and to be placed on the mailing list for the future publications.

NEW STORE!

for the

HOBBYIST • HAM • AUDIO • CB'R

General Electronics

5511 YONGE ST., WILLOWDALE, ONT.

221-6174

ETI Project File

Updates, news, information, ETI gives you project support

PARTS PARTS PARTS

We are continually beseiged with letters from readers asking where they can get parts in their area. Since we can't take a country-wide tour to check where all the elctronics parts-places are, how about sending us a note on any stores you have found useful, what they are good for (if you own the place you can contribute too!) and so on. At some time in the future we would like to help out the "lost" readers by publishing a rundown of where to get what.

PROJECT FILE is our department dealing with information regarding ETI Projects. Each month we will publish the Project Chart, any Project Notes which arise, general Project Constructor's Information, and some Reader's Letters and Questions relating to projects.

PROJECT NOTES

Since this magazine is largely put together by humans, the occasional error manages to slip by us into print. In addition variations in component characteristics and availability occur, and many readers write to us about their experiences in building our projects. This gives us information which could be helpful to other readers. Such information will be published in Project File under Project Notes. (Prior to May 78 it was to be found at the end of News Digest.)

Should you find that there are notes you wish to read for which you do not have the issue, you may obtain them in one of two ways. You can buy the back issue from us (refer to Project Chart for date of issue and see also Reader Service Information on ordering). Alternatively you may obtain a photocopy of the note free of charge, so long as your request includes a self addressed stamped envelope for us to mail it back to you. Requests without SASE will not be answered.

PROJECT CONSTRUCTOR'S INFORMATION

Useful information on the terminology and notation will be published each month in Project File.

ETI Project Chart

ISSUE DATE	ARTICLE
Jan 78	Option Clock & Neg.
July 78	Note: S
Jan 78	LED Pendant
May 78	Note: C
Jan 78	Compander & Neg.
Feb 78	Tachomonitor
Apr 78	Neg.
Feb 78	LCD Panel Meter
Apr 78	Note: C
Apr 78	Neg.
Feb 78	CB Power Supply
Apr 78	Neg.
May 78	Note: N
Feb 78	Freezer Alarm
Apr 78	Neg.
Mar 78	Hammer Throw
June 78	Neg.
Mar 78	True RMS Meter
Apr 78	Neg.
Mar 78	Home Burglar Alarm
Apr 78	Computer PSU & Neg.
Apr 78	Audio Delay Line & Neg.
Apr 78	Gas Alarm & Neg.
May 78	White Line Follower
June 78	Neg.
May 78	Acoustic Feedback Eliminator
June 78	Neg.
May 78	Add-on FM Tuner
June 78	Neg.
June 78	Audio Analyser
June 78	Ultrasonic Switch & Neg.
June 78	Phone Bell Extender & Neg.
July 78	Proximity Switch
Aug 78	Neg.

ISSUE DATE	ARTICLE
July 78	Real Time Analyser MK II (LED)
Aug 78	Neg.
July 78	Acc. Beat Metronome.
Aug 78	Neg.
July 78	Race Track
Aug 78	Neg.
Aug 78	Sound Meter & Neg.
Dec 78	Note: N
Aug 78	Porch Light & Neg.
Aug 78	IB Metal Locater & Neg.
Aug 78	Two Chip Siren & Neg.
Sept 78	Audio Oscillator
Nov 78	Neg.
Sept 78	Shutter Timer
Nov 78	Neg.
Sept 78	Rain Alarm
Oct 78	CCD Phaser
Nov 78	Neg.
Oct 78	UFO Detector
Nov 78	Neg.
Oct 78	Strobe Idea
Nov 78	Cap Meter &Neg.
Nov 78	Stars & Dots
Nov 78	CMOS Preamp & Neg.
Dec 78	Digital Anemometer
Dec 78	Tape Noise Elim
Dec 78	EPROM Programmer
Jan 79	Log Exp Convert.
Jan 79	Digital Tach.
Jan 79	FM Transmitter

Canadian Projects Book

Audio Limiter	Metal Locator
5W Stereo	Heart-Rate Monitor
Overled	GSR Monitor
Bass Enhancer	Phaser
Modular Disco	Fuzz Box
G P Preamp	Touch Organ
Bal. Mic. Preamp	Mastermind
Ceramic Cartridge Preamp	Double Dice
Mixer & PSU	Reaction Tester
VU Meter Circuit	Sound-Light Flash
Headphone Amp	Burglar Alarm
50W-100W Amp	Injector-Tracer
Note: N Apr. 78	Digital Voltmeter

Key to Project Notes

C:- PCB or component layout
D:- Circuit diagram
N:- Parts Numbers, Specs
Neg:- Negative of PCB pattern printed
O:- Other
S:- Parts Supply
T:- Text
U:- Update, Improvement, Mods
***:- Notes for this project of complicated nature, write for details (enclose S.A.S.E., see text)

PROJECT CHART

This chart is an index to all information available relating to each project we have published in the preceding year. It guides you to where you will find the article itself, and keeps you informed on any notes that come up on a particular project you are interested in. It also gives you an idea of the importance of the notes, in case you do not have the issue refered to on hand.

Every few months we print a pull out section in the magazine which may be used as a photographic negative for making printed circuit boards (as described in our January 78 issue). Each edition of this sheet contains projects from the preceding few issues. Information on where to find which negative is included in the chart.

Write to: Project File
Electronics Today International
Unit 6, 25 Overlea Blvd.,
TORONTO, Ontario
M4H 1B1

Component Notations and Units

We normally specify components using an international standard. Many readers will be unfamiliar with this but it's simple, less likely to lead to error and will be widely used sooner or later. ETI has opted for sooner!

Firstly decimal points are dropped and substituted with the multiplier, thus 4.7uF is written 4u7. Capacitors also use the multiplier nano (one nanofarad is 1000pF). Thus 0.1uF is 100n, 5600pF is 5n6. Other examples are 5.6pF = 5p6, 0.5pF = 0p5.

Resistors are treated similarly: 1.8M ohms is 1M8, 56k ohms is 56k, 4.7k ohms is 4k7, 100 ohms is 100R, 5.6 ohms is 5R6.

Kits, PCBs, and Parts

We do not supply parts for our projects, these must be obtained from component suppliers. However, in order to make things easier we co-operate with various companies to enable them to promptly supply kits, printed circuit boards and unusual or hard-to-find parts. Prospective builders should consult the advertisements in ETI for suppliers for current and past projects.

Any company interested in participating in the supply of kits, pcbs or parts should write to us on their letterhead for complete information.

READER'S LETTERS AND QUESTIONS

We obviously cannot troubleshoot the individual reader's projects, by letter or in person, so if you have a query we can only answer it to the extent of clearing up ambiguities, and providing Project Notes where appropriate. If you desire a reply to your letter it must be accompanied by a self addressed stamped envelope.

True RMS Meter

In this project, published in the March 78 issue, C12 was incorrectly listed in the parts list as 820n. It's correct value is 820p as shown on the circuit diagram.

PCB Negatives: Please Tell Us . . .

How do they work for you? Now that we have been publishing them every two or three issues for a year, we would like to know of readers experiences with them. (Next batch in February, by the way.) What materials do you use? What exposures? How successful are the results? Any suggestions for others? Many readers have written saying they like the idea, but please let us know how it's actually worked in practice.

4 ETI Publications

Projects Books 3 & 4 now sold out.

Send your order, with payment (not cash), to

ETI PUBLICATIONS,
Electronics Today International
Unit Six
25 Overlea Boulevard
Toronto, Ontario
M4H 1B1

Please specify which publications you require, and print your name and address clearly.

Canadian Projects Book No. 1 — $3.00

Top projects from the early issues of ETI's Canadian edition, plus some of the projects from the UK edition's issues which were distributed in Canada in 1976. All projects use parts available in Canada. Those projects from UK edition have been completely re-worked in Canada for Canadian constructors. Includes a series of modular disco projects, plus games, biofeedback, metal locator, etc.

Circuits No. 1 — $5.00

A brand new concept from the house of ETI. More than 100 pages packed with a wide range of experimenters circuits. Based on the 'Tech Tips' section carried in the overseas editions of ETI, Circuits 1 is the first of a series of specials — produced for the enthusiasts who know what they want, but not where to get it! Circuits 1 will also act as a catalyst for further development of ideas, ideal for the experimenter. The collection of more than 200 circuits is complemented by a comprehensive index, making searches for a particular circuit quick and simple. Also, similar circuits can be compared easily, due to the logical layout and grouping used throughout. Last and by no means least, Circuits 1 has no distracting advertisements in the main section!

Electronics — it's easy Volume 1 — $3.50*

The best introductory series to electronics ever published in a magazine. Volume three completing the series, will be available in a few months. Volume One introduces electronics to the beginner by going through the systems approach, basic concepts, meters and measurements, frequency and wavelengths, electronics and communication, capacitance and inductance, capacitive and inductive reactance, resistance, capacitance and inductance in combination, detection and amplification, elements of transistor amplifiers, emitter followers and DC amplifiers, and basic operational amplifiers.

Electronics — it's easy Volume 2 — $3.50*

Volume Two introduces the sources of power, simple power supplies, how regulated power supplies work, general purpose supplies, generating signal waveforms, generating non-sinusoidal waveforms, all about electronic filters, more about filters, introducing digital systems, the algebra of logic, integrated circuit forms of logic functions, digital sub-systems, counters and shift registers.

$6.00 For Both*

Reader Service Information

Editorial Queries

Written queries can only be answered when accompanied by a self-addressed, stamped enveloped, and the reply can take up to three weeks. These must relate to recent articles and not involve ETI staff in any research. Mark your letter ETI Query.

Projects, Components, Notation

For information on these subjects please see our Project File section.

Sell ETI

ETI is available for resale by component stores. We can offer a good discount and quite a big bonus, the chances are customers buying the magazine will come back to you to buy their components. Readers having trouble getting their copy of ETI could suggest to their component store manager that he should stock the magazine.

Back Issues and Photocopies

Previous issues of ETI-Canada are available direct from our office for $2.00 each. Please specify issue by the month, not by the features you require. The following back issues are still available for sale.

1977	1978
February	January
[illegible]	February
[illegible]	March
May	April
June	May
July	June
[illegible]	July
September	August
[illegible]	September
November	October
[illegible]	November
	December

We can supply photocopies of any article published in ETI-Canada, for which the charge is $1.00 per article, regardless of length. Please specify issue and article. (A special consideration applies to errata for projects, see Project File.)

LIABILITY: Whilst every effort has been made to ensure that all constructional projects referred to in this edition will operate as indicated efficiently and properly and that all necessary components to manufacture the same will be available, no responsibility whatsoever is accepted in respect of the failure for any reason at all of the project to operate effectively or at all whether due to any fault in design or otherwise and no responsibility is accepted for the failure to obtain any component parts in respect of any such project. Further no responsibility is accepted in respect of any injury or damage caused by any fault in the design of any such project as aforesaid.

Advertisers' Index

A.P. Products	40
Active Components	23
Allan Crawford	6
Alpha Tuner Service	56
Canvox	41
Castle Tuner Service	55
Ceres	49
Chips	8
Classified	71
Dominion Radio	49
Electronics International	41
H. Rogers	13
Integrated Circuits	IBC
Jana Electronics	66, 67
Kester Solder	59
Len Finkler	11, 74
Lorcanic Corp.,	49
McGraw-Hill	19
Ocean Electronics	37
Omnitronix	OBC
Teknion	65
Zenith Radio	54

DIODES/ZENERS

1N914	100v	10mA	.05
1N4005	600v	1A	.08
1N4007	1000v	1A	.15
1N4148	75v	10mA	.05
1N4733	5.1v	1 W Zener	.25
1N753A	6.2v	500 mW Zener	.25
1N758A	10v	"	.25
1N759A	12v	"	.25
1N5243	13v	"	.25
1N5244B	14v	"	.25
1N5245B	15v	"	.25

SOCKETS/BRIDGES

8-pin	pcb	.20	ww	.35
14-pin	pcb	.20	ww	.40
16-pin	pcb	.20	ww	.40
18-pin	pcb	.25	ww	.75
22-pin	pcb	.35	ww	.95
24-pin	pcb	.35	ww	.95
28-pin	pcb	.45	ww	1.25
40-pin	pcb	.50	ww	1.25
Molex pins .01		To-3 Sockets		.25
2 Amp Bridge		100-prv		.95
25 Amp Bridge		200-prv		1.95

TRANSISTORS, LEDS, etc.

2N2222	NPN (2N2222 Plastic .10)	.15
2N2907	PNP	.15
2N3906	PNP (Plastic - Unmarked)	.10
2N3904	NPN (Plastic - Unmarked)	.10
2N3054	NPN	.35
2N3055	NPN 15A 60v	.50
T1P125	PNP Darlington	.35
LED Green, Red, Clear, Yellow		.15
D.L.747	7 seg 5/8" High com-anode	1.95
MAN72	7 seg com-anode (Red)	1.25
MAN3610	7 seg com-anode (Orange)	1.25
MAN82A	7 seg com-anode (Yellow)	1.25
MAN74A	7 seg com-cathode (Red)	1.50
FND359	7 seg com-cathode (Red)	1.25

C MOS

4000	.15
4001	.15
4002	.20
4004	3.95
4006	.95
4007	.20
4008	.75
4009	.35
4010	.35
4011	.20
4012	.20
4013	.40
4014	.75
4015	.75
4016	.35
4017	.75
4018	.75
4019	.35
4020	.85
4021	.75
4022	.75
4023	.20
4024	.75
4025	.20
4026	1.95
4027	.35
4028	.75
4030	.35
4033	1.50
4034	2.45
4035	.75
4040	.75
4041	.69
4042	.65
4043	.50
4044	.65
4046	1.25
4049	.45
4050	.45
4066	.55
4069/74C04	.25
4071	.25
4081	.30
4082	.30
MC 14409	14.50
MC 14419	4.85
4511	.95
74C151	1.90

— T T L —

7400	.10	7473	.25	74176	.85	74H72	.35
7401	.15	7474	.30	74180	.55	74H101	.75
7402	.15	7475	.35	74181	2.25	74H103	.55
7403	.15	7476	.40	74182	.75	74H106	.95
7404	.10	7480	.55	74190	1.25		
7405	.25	7481	.75	74191	.95	74L00	.25
7406	.25	7483	.75	74192	.75	74L02	.20
7407	.55	7485	.55	74193	.85	74L03	.25
7408	.15	7486	.25	74194	.95	74L04	.30
7409	.15	7489	1.05	74195	.95	74L10	.20
7410	.15	7490	.45	74196	.95	74L20	.35
7411	.25	7491	.70	74197	.95	74L30	.45
7412	.25	7492	.45	74198	1.45	74L47	1.95
7413	.25	7493	.35	74221	1.00	74L51	.45
7414	.75	7494	.75	74367	.75	74L55	.65
7416	.25	7495	.60			74L72	.45
7417	.40	7496	.80	75108A	.35	74L73	.40
7420	.15	74100	1.15	75491	.50	74L74	.45
7426	.25	74107	.25	75492	.50	74L75	.55
7427	.25	74121	.35			74L93	.55
7430	.15	74122	.55			74L123	.85
7432	.20	74123	.35	74H00	.15		
7437	.20	74125	.45	74H01	.20	74S00	.35
7438	.20	74126	.35	74H04	.20	74S02	.35
7440	.20	74132	.75	74H05	.20	74S03	.25
7441	1.15	74141	.90	74H08	.35	74S04	.25
7442	.45	74150	.85	74H10	.35	74S05	.35
7443	.45	74151	.65	74H11	.25	74S08	.35
7444	.45	74153	.75	74H15	.45	74S10	.35
7445	.65	74154	.95	74H20	.25	74S11	.35
7446	.70	74156	.70	74H21	.25	74S20	.25
7447	.70	74157	.65	74H22	.40	74S40	.20
7448	.50	74161	.55	74H30	.20	74S50	.20
7450	.25	74163	.85	74H40	.25	74S51	.25
7451	.25	74164	.60	74H50	.25	74S64	.15
7453	.20	74165	1.10	74H51	.25	74S74	.35
7454	.25	74166	1.25	74H52	.15	74S112	.60
7460	.40	74175	.80	74H53J	.25	74S114	.65
7470	.45			74H55	.20		
7472	.40						

74S133	.40
74S140	.55
74S151	.30
74S153	.35
74S157	.75
74S158	.30
74S194	1.05
74S257 (8123)	1.05
74LS00	.20
74LS01	.20
74LS02	.20
74LS04	.20
74LS05	.25
74LS08	.25
74LS09	.25
74LS10	.25
74LS11	.25
74LS20	.20
74LS21	.25
74LS22	.25
74LS32	.25
74LS37	.25
74LS38	.35
74LS40	.30
74LS42	.65
74LS51	.35
74LS74	.35
74LS86	.35
74LS90	.55
74LS93	.55
74LS107	.40
74LS123	1.00
74LS151	.75
74LS153	.75
74LS157	.75
74LS164	1.00
74LS193	.95
74LS367	.75
74LS368	.65

9000 SERIES

9301	.85	95H03	1.10
9309	.35	9601	.20
9322	.65	9602	.45

LINEARS, REGULATORS, etc.

MCT2	.95	LM320T5	1.65	LM340K15	1.25	LM723	.40
8038	3.95	LM320T12	1.65	LM340K18	1.25	LM725N	2.50
LM201	.75	LM320T15	1.65	LM340K24	1.25	LM739	1.50
LM301	.45	LM324N	1.25	78L05	.75	LM741 (8 14)	.25
LM308 (Mini)	.95	LM339	.75	78L12	.75	LM747	1.10
LM309H	.65	7805 (340T5)	.95	78L15	.75	LM1307	1.25
LM309K (340K-5)	.85	LM340T12	.95	78M05	.75	LM1458	.65
LM310	.85	LM340T15	.95	LM373	2.95	LM3900	.50
LM311D (Mini)	.75	LM340T18	.95	LM380 (8-14 PIN)	.95	LM75451	.65
LM318 (Mini)	1.75	LM340T24	.95	LM709 (8, 14 PIN)	.25	NE555	.35
LM320K5 (7905)	1.65	LM340K12	1.25	LM711	.45	NE556	.85
LM320K12	1.65					NE565	.95
						NE566	1.25
						NE567	.95

MICRO'S, RAMS, CPU'S, E-PROMS

74S188	3.00	8214	8.95
1702A	4.50	8224	3.25
MM5314	3.00	8228	6.00
MM5316	3.50	8251	8.50
2102-1	1.45	8255	10.50
2102L-1	1.75	8T13	1.50
2114	9.50	8T23	1.50
TR1602B	3.95	8T24	2.00
TMS 4044	9.95	8T97	1.00
		2107B-4	4.95
8080	8.95	2708	9.50
8212	2.95	Z80 PIO	8.50

INTEGRATED CIRCUITS UNLIMITED

7889 Clairemont Mesa Blvd., San Diego, CA 92111 U.S.A.

No Minimum

All prices in U.S. dollars. Please add postage to cover method of shipping. Orders over $100 (U.S.) will be shipped air no charge. Payment should be submitted with order in U.S. dollars. All IC's Prime/Guaranteed. All orders shipped same day received.

SPECIAL DISCOUNTS

Total Order	Deduct
$35 - $99	10%
$100 - $300	15%
$301 - $1000	20%

Phone (714) 278-4394 BarclayCard / Access / American Express / BankAmericard / Visa / MasterCharge

LEADER TEST INSTRUMENTS

A COMPLETE QUALITY LINE FOR INDUSTRY, EDUCATION & SERVICE.

- Oscilloscopes/Vectorscopes
- Millivolt Meters
- Color Bar & Pattern Generators
- Signal Generators
- DVM's
- Sweep/Marker Generators
- Multimeters
- Accessories

LBO 520

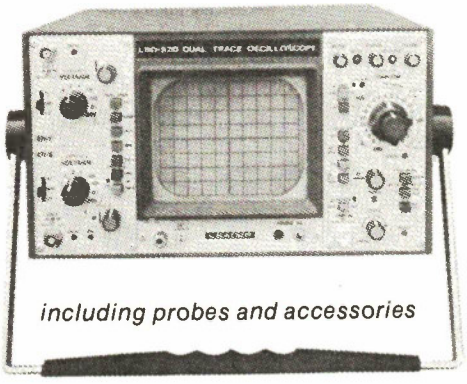

including probes and accessories

LBO 520 30MHz DUAL TRACE OSCILLOSCOPE

with signal delay line and post deflection acceleration C.R.T.

The newest addition to a growing family of Leader Oscilloscopes. This 30MHz dual trace oscilloscope has good bandwidth without sacrificing the high sensitivity — 5mV/cm. It is specially suited for display of wave forms generated in "high speed" digital circuits such as those used in computer equipment. The cathode ray tube is the high brilliancy type using the post deflection acceleration voltage. The vertical amplifier includes a delay line — a convenience in observation of the pulse leading edge. Other features are provided for a wide range of applications.

- Wide band—High Sensitivity
- Large clear display with high brightness
- Possible to observe the high speed pulse
- Equipped with various functions
- Portable compact type and improved facility

LBO 508 20MHz DUAL TRACE OSCILLOSCOPE

A brand new addition to a growing family of Leader oscilloscopes. This 20 MHz dual trace oscilloscope is small in size and light in weight. Front panel controls are logically grouped and located for fast and easy operation. The LBO 508 is a 20 MHz oscilloscope with a 10 mV/cm — 20 V/cm sensitivity in 11 calibrated steps. The high intensity CRT delivers excellent contrast while the regulated high voltage supply provides stable brightness.

The applications for this new outstanding oscilloscope are limitless. The LBO 508 is ideally suited for research and development, production, quality control, education and servicing.

- Compact, lightweight, horizontal package
- Front panel x-y one touch operation
- Add and subtract mode
- Automatic and T.V. sync. triggering

including probes and accessories

LBO 508

LBO 507

including probes and accessories

LBO 507 20MHz SINGLE CHANNEL OSCILLOSCOPE

Yet another brand new addition to the growing family of Leader oscilloscopes. This single channel 20MHz is small in size and light in weight. Front panel controls are logically grouped and located for fast and easy operation. The LBO 507 is a 20MHz oscilloscope with a 10 mV/cm — 20V/cm sensitivity in 11 calibrated steps. A 200 mV/cm horizontal amplifier is incorporated to permit front panel x-y operation. The high intensity CRT delivers excellent contrast while the regulated high voltage supply provides stable brightness.

This general purpose oscilloscope is ideally suited for research and development, production, quality control, education and general service applications.

- Compact, lightweight, horizontal package
- Front panel x-y operation
- DC to 20 MHz bandwidth
- Automatic and T.V. sync. triggering
- Unique trigger circuit for maximum display stability

Sold and Serviced throughout Canada by

LEADER TEST INSTRUMENTS

"PUT US TO THE TEST."

omnitronix ltd.

WRITE FOR OUR DETAILED CATALOG.

2056 SOUTH SERVICE RD.
TRANS CANADA HWY
DORVAL, QUE. H9P 2N4
PHONE: (514) 683-6993