A Howard W. Sams ®

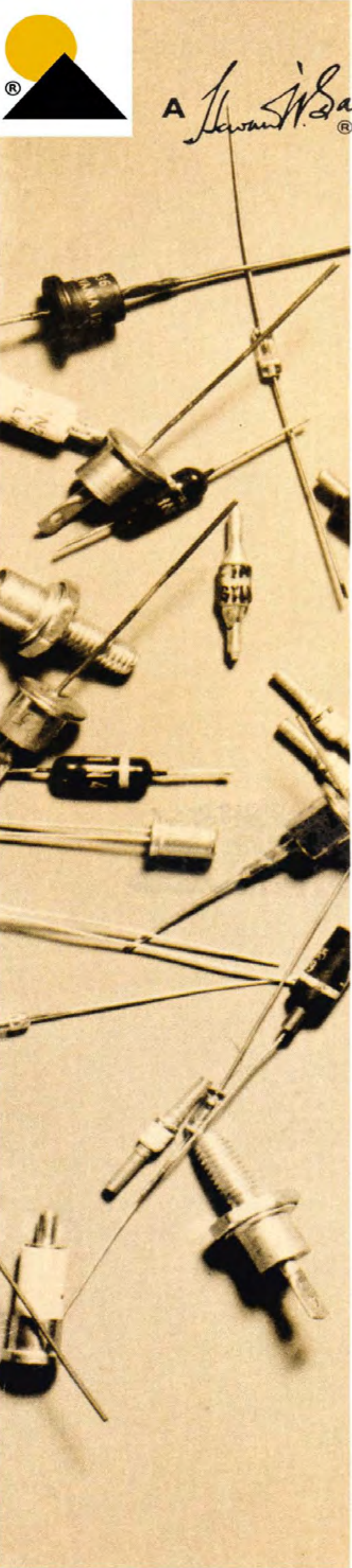

PHOTOFACT PUBLICATION • DIT-1

DIODE CIRCUITS HANDBOOK

by RUFUS P. TURNER

A concise discussion of diode circuits, containing nearly 100 diagrams with complete explanation of their operation.

$2.50

Cat. No. DIT-1

DIODE CIRCUITS HANDBOOK

by

Rufus P. Turner

HOWARD W. SAMS & CO., INC.
THE BOBBS-MERRILL COMPANY, INC.
Indianapolis • New York

FIRST EDITION

FIRST PRINTING — MARCH, 1963
SECOND PRINTING — APRIL, 1965

DIODE CIRCUITS HANDBOOK

Library of Congress Catalog Card Number: 63-13904

Preface

It is almost impossible to overestimate the importance of the crystal diode in modern electronics. It is everywhere . . . literally, from the dark reaches of space to the bottom of the sea.

And yet diodes are among the simplest of all electronic components—so simple, in fact, that they are scarcely ever really studied. Consequently, they are often misunderstood and misused. This book was written to fill the need for a practical book on diode functions and applications. The circuits included represent a generous sampling of the uses for conventional diodes, either alone or in conjunction with transistors, varactors, and tunnel diodes.

The reader will probably recognize some of the circuits as old standbys redesigned around modern diodes for improved performance. In each instance, the best diode (germanium, selenium, silicon, copper-oxide) has been used. In some circuits more than one type has been used in order to secure the combined advantages of each.

Each of the circuits has been painstakingly tested. In those cases where specific components are suggested, any equivalent type may be used; the types listed are those used in testing the circuits.

RUFUS P. TURNER

February, 1963

Table of Contents

CHAPTER 1

CHAPTER 2

CHAPTER 3

CHAPTER 4

CHAPTER 5

CHAPTER 6

CHAPTER 7

CHAPTER 8

APPENDIX

CHAPTER 1

RECEIVER CIRCUITS

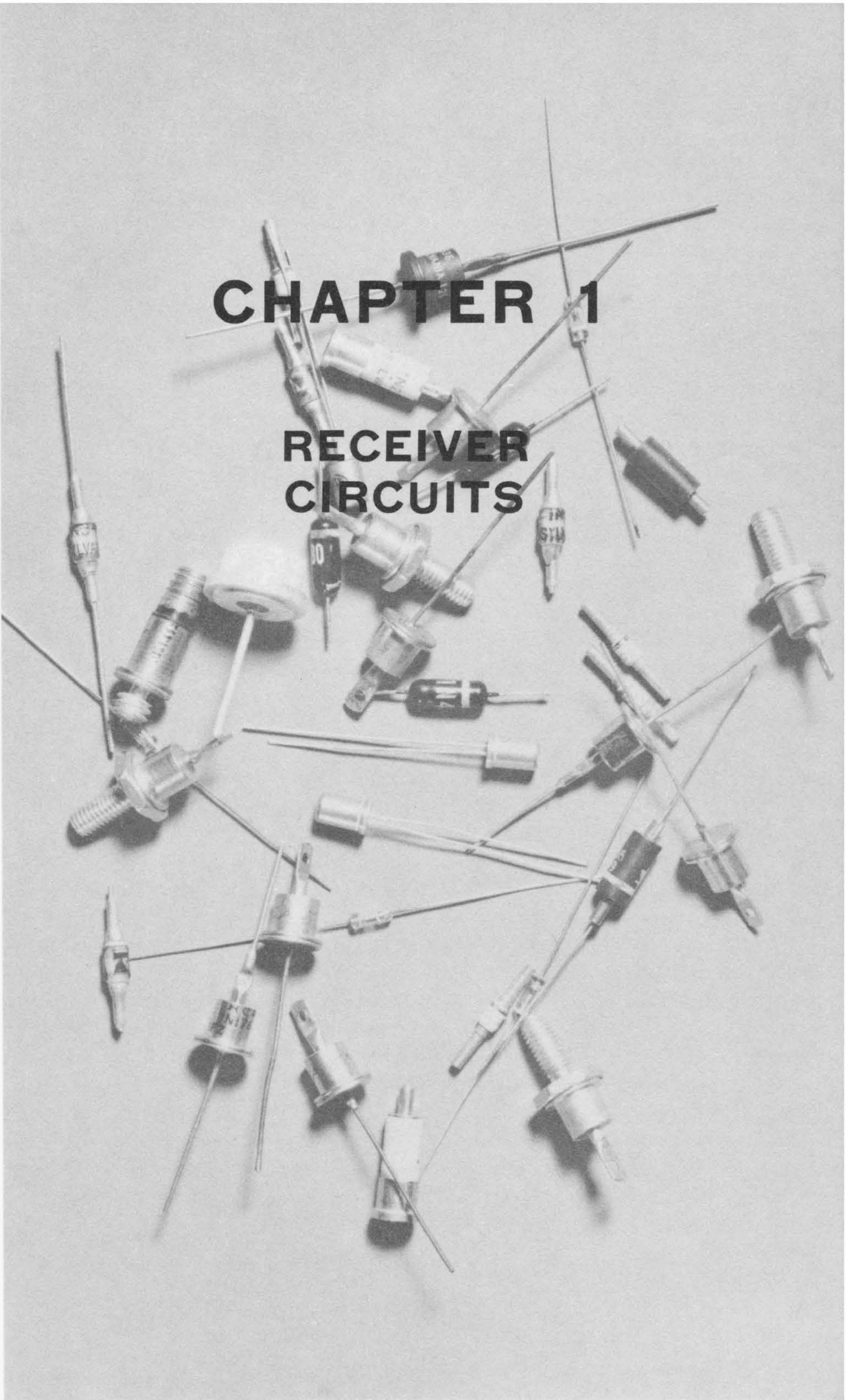

Receiver Circuits

The first practical semiconductor diode was the erratic crystal detector of the early 1900's. Although that device was superior to the coherer and magnetic detector which it succeeded, it eventually was supplanted, except in experimental equipment and toys, by the more sensitive and stable vacuum tube. The modern diode was developed in the 1940's as an answer to the demand for a radar detector free from the high-frequency limitations of the conventional vacuum tube. Thus, the diode has been present, off and on, throughout most of the history of radio communications.

In communications the modern diode does the same basic job of signal demodulation as the early crystal detector, but with greatly increased efficiency and reliability and no need for adjustment. It also does more; in radio it simplifies FM-detector circuits, provides automatic amplitude and noise limiting and frequency control, and in television it does all of those jobs plus providing DC restoration, pulse separation, and sync clipping. And these are only a few of its functions in communications. This chapter describes typical receiver applications.

BASIC CRYSTAL RECEIVER

The crystal set is still the simplest and the only true emergency radio receiver, since its circuit is uncomplicated and its operation requires no battery or other local power supply. In this set the diode demodulates the amplitude-modulated RF signal and delivers AF power to the earphones. The diode does not amplify; consequently, it cannot boost the received signal. (In fact, since the diode is not 100% efficient in its operation, it delivers an output signal which is somewhat less than that which it receives.) Good crystal-set design attempts, through impedance matching and a high-Q tuned circuit, to transfer the maximum signal from the antenna to the diode and the maximum signal from the diode to the earphones of the receiver.

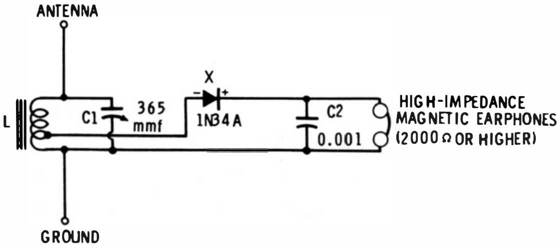

Fig. 1-1. Basic crystal receiver.

Fig. 1-1 shows the basic circuit. Here, the tuned circuit is composed of a transistor-type ferrite, loop antenna (L), and a 365-mmf variable capacitor (C1). The tuning range is 540-1,600 kc. The 1N34A germanium diode (X) is connected to the tap on the antenna coil for matching the low impedance of the diode. This prevents broad tuning, which would result from loading effect if the diode were connected across the entire coil. C2 is an RF bypass capacitor. The DC resistance of the magnetic earphones must be 2,000 ohms or higher. Do not attempt to use crystal earphones in this circuit. If the earphones are replaced with a 2,000-ohm, ½-watt resistor, the output of the circuit may be used to drive an audio amplifier.

In weak-signal areas the circuit works best with a good outside antenna and ground. Often the antenna may be a short piece of wire inside the building, or a window screen or bedspring. In medium- and strong-signal areas, no external antenna or ground will be needed as antenna coil L picks up sufficient signal when it is oriented correctly with respect to the broadcast station.

BANDPASS CRYSTAL RECEIVER

The broad tuning which is characteristic of many crystal sets is eliminated by the selective, high-fidelity, bandpass circuit shown in Fig. 1-2. This circuit uses the same bandpass filter type of tuner employed in some tube-type high-fidelity AM receivers. But in the crystal circuit, the connections to one RF transformer (T3) have been interchanged for better impedance matching to the 1N48S germanium diode detector (X).

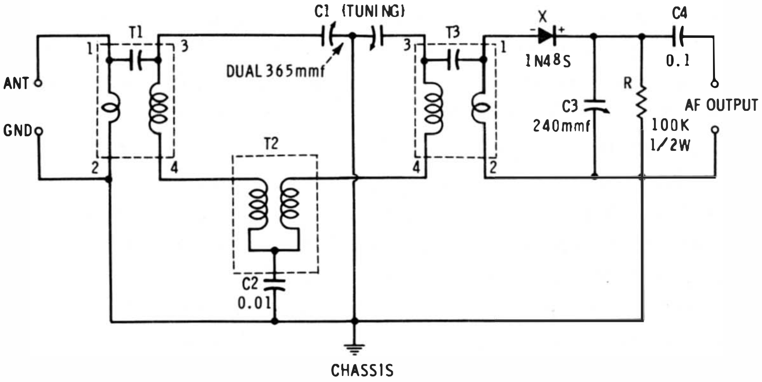

Fig. 1-2. Bandpass crystal receiver.

The circuit is tunable from 540 to 1,750 kc by means of the dual 365-mmf variable capacitor, C1. Transformers T1 and T3 are shielded antenna stage RF coils (Miller No. 242-A); T2 is a shielded negative mutual coupling coil (Miller No. EL-56).

The audio output of this circuit may be applied directly to crystal or magnetic earphones or to an audio amplifier.

POCKET RECEIVER

Use of miniature components can keep a receiver using the circuit in Fig. 1-3 small enough to fit into a shirt pocket. The antenna may be a length of thin, flexible wire stitched or clipped to the clothing. Such a receiver may be employed for broadcast listening or for actor cueing and personal paging from a nearby transmitter.

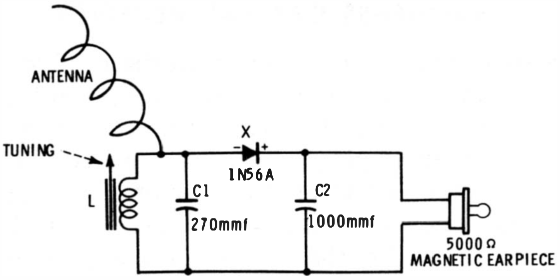

Fig. 1-3. Pocket receiver.

The tuner is composed of a 270-mmf silvered mica capacitor (C1) and slug-tuned ferrite loopstick antenna (L). When *L* has an inductance variation range of 35-300 microhenries (Miller No. 2002) the circuit may be tuned between 550 and 1,600 kc with C1 equal to 270 mmf. Tuning is accomplished simply by adjusting the slug screw of loopstick L.

The 1N56A germanium diode (X) drives a 5,000-ohm magnetic earplug which is bypassed for RF by capacitor C2.

If operation in the citizens' band is desired, *L* may be changed to a slug-tuned variable inductor having the range 1.5-3.2 microhenries (Miller No. 4404) and C1 to a 10-mmf silvered mica capacitor.

If the earphone volume is insufficient, a 1- or 2-stage subminiature transistorized AF amplifier may be added to the receiver.

SECOND DETECTOR IN AM SUPERHET

This is a common use of the diode in multistage radio receivers of both tube and transistor types. Fig. 1-4 shows a

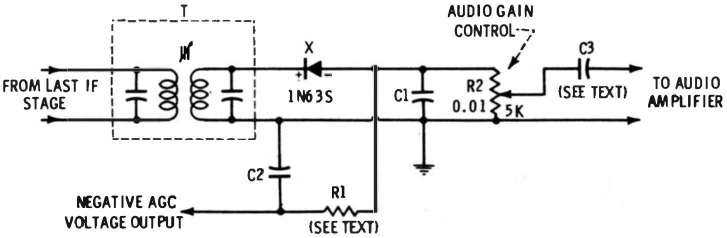

Fig. 1-4. Second detector.

typical circuit in which a 1N63S germanium diode (X) acts both as a second detector and AGC rectifier.

In a transistor-type receiver, the secondary of IF transformer T will be the low-impedance winding; C2 and C3 will be 1 to 10 mfd; and R1, 3,300 ohms. In a tube-type receiver, *T* must be a half-wave detector-type IF transformer; C2, 10 mfd; C3, 0.1 mfd; and R1, 5,000 to 50,000 ohms depending on the type of tubes to be controlled by the AGC voltage.

In addition to being small, without filaments, and free from heat, microphonics, and internal hum, the diode second detector provides lower dynamic impedance than the equivalent tube-type detector.

NOISE LIMITER IN AM SUPERHET

Fig. 1-5 shows a noise limiter (silencer) combined with a diode second detector and having automatic threshold control.

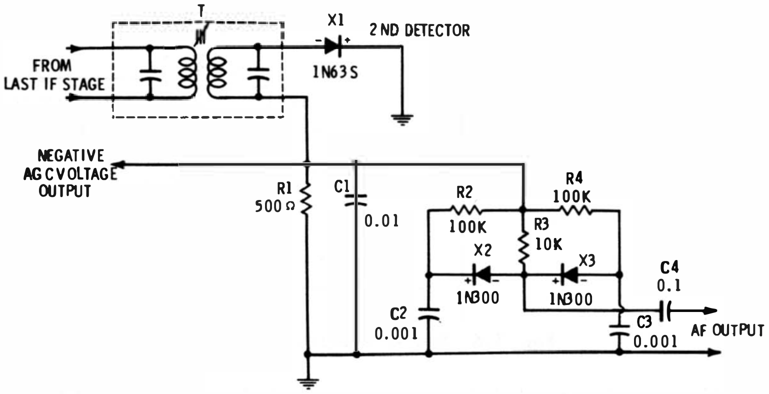

Fig. 1-5. Combined second detector and noise limiter.

In this arrangement, the 1N63S germanium diode (X1) acts as a conventional second detector-AGC rectifier. It also supplies a variable DC bias voltage, proportional to the IF signal, to the two 1N300 silicon junction noise-limiting diodes (X2 and X3); this is the automatic threshold voltage.

Normally, the AF output of the second detector is transmitted by the limiter network (C2-C3-X2-X3-R2-R3-R4) to the audio amplifier through coupling capacitor C4, with a small amount of attenuation by the circuit. But when noise is present on the signal, either X2 or X3 effectively short-circuits the noise pulse to ground—a positive noise pulse forward-biases X3 momentarily, causing this diode to conduct heavily and limit the AF amplitude; a negative noise pulse forward-biases X2 and produces the same limiting effect.

Silicon junction diodes are used for X2 and X3 because of their extremely high reverse resistance and ability to operate with high resistances R2 and R4. A germanium diode is satisfactory for the second detector (X1).

SQUELCH CIRCUIT

A simple squelch circuit for quieting a receiver between transmissions is shown in Fig. 1-6. Here, a 1N56A germanium diode is connected as a shunt detector, through DC-blocking capacitor C1, to the secondary of the second detector transformer in the receiver. This diode delivers AF output corresponding to the modulation envelope of the received AM signal, and DC output which is proportional to the average carrier amplitude of the signal. This combined output is presented to gate diode X2.

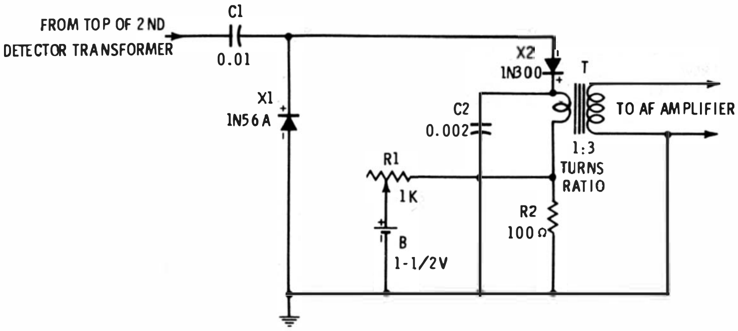

Fig. 1-6. Simple squelch circuit.

The threshold of the gate circuit may be set at will by adjustment of rheostat R1 so that only signals of desired strength can pass through to the audio amplifier of the receiver. Weaker signals are held back; hence, squelch action is obtained. The means for accomplishing this performance is the adjustable positive DC bias applied to diode X2. The bias voltage, adjustable from zero to 1.5 volts, is obtained from battery B through voltage-divider network R1-R2. This voltage reverse-biases X2, and since this diode is a silicon unit, its leakage current is essentially zero. The positive DC component (carrier intensity) of the signal from X1 must exceed the positive threshold voltage before X2 will conduct and pass the AF signal through transformer T; as long as the signal amplitude is sufficiently below the threshold, no signal will pass through.

While a battery (B) is shown in Fig. 1-6, the DC source might also be the power supply of the receiver if the resistance of R1 is increased proportionately. Maximum threshold values other than 1.5 volts may be obtained by proper selection of input DC voltage and resistance of R1 and R2.

Transformer T may be any convenient interstage audio-coupling transformer having an input-to-output turns ratio of 1 :2 or 1 :3. Capacitor C2 is an RF bypass.

FM DISCRIMINATOR

Fig. 1-7 shows a discriminator of the Foster-Seeley type for FM detection. Although this circuit is not critical in assembly or operation, its quality is enhanced by matching germanium diodes X1 and X2 and resistors R1 and R2. The specified 1N35S unit is composed of two matched 1N34AS miniature germanium diodes mounted on a single base. Resistors R1 and R2 should be matched within 1%. Resistor R3 and capacitor C3 form a de-emphasis network of the conventional type.

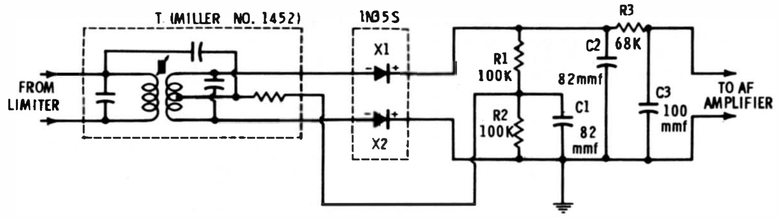

Fig. 1-7. FM discriminator.

FM RATIO DETECTOR

Another FM detector is shown in Fig. 1-8. The ratio detector, unlike the discriminator described in the preceding

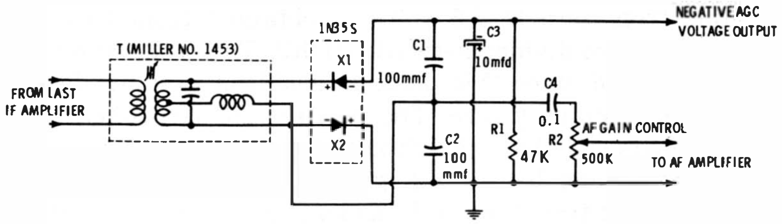

Fig. 1-8. FM ratio detector.

section, requires no limiter—an advantage when receiver layout must be simple and economical. This circuit delivers a negative AGC voltage, as well as AF output.

As in the discriminator, quality is improved by matching germanium diodes X1 and X2. The specified 1N35S unit is composed of two matched 1N34AS miniature diodes mounted on a single base. If the matched unit is not used, the individual diodes should be chosen to have forward conduction curves as nearly identical as possible. The gain control potentiometer (R2) may be the regular audio gain control of the receiver.

TV VIDEO DETECTOR

Fig. 1-9 shows a video detector for TV receivers and wide-range instruments. It takes advantage of the low shunting capacitance and low dynamic impedance of the 1N295 germanium video-detector diode.

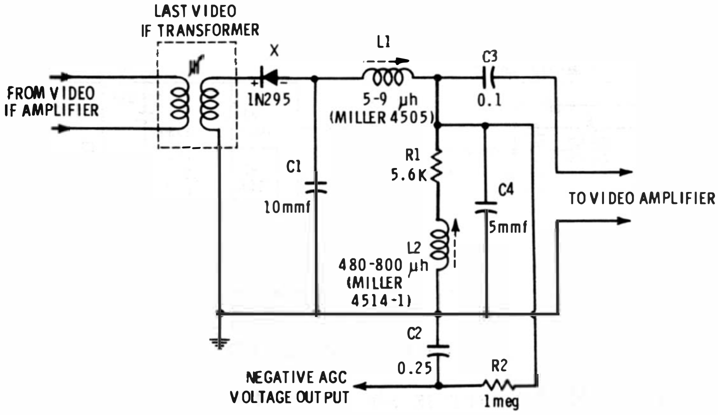

Fig. 1-9. Video detector.

The series-peaking coil (L1) and shunt-peaking coil (L2) are slug-tuned miniature inductors which may be set exactly for the desired pass band as viewed with an oscilloscope. For 4.5-mc bandwidth, L1 (Miller No. 4505) should be set to approximately 8 microhenries, and L2 (Miller No. 4514-1) to approximately 600 microhenries. Negative AGC voltage is supplied through filter C2-R2. Capacitors C1 and C4 are silvered mica.

DC RESTORER

Both AC and DC information are present in the output of a TV video amplifier, but the DC component is lost when the signal is capacitively-coupled to the picture tube, as through *C* in Fig. 1-10. When this happens, the picture tube does not receive the average brightness information provided by the video signal, and the brightness control of the receiver does not completely compensate for this loss.

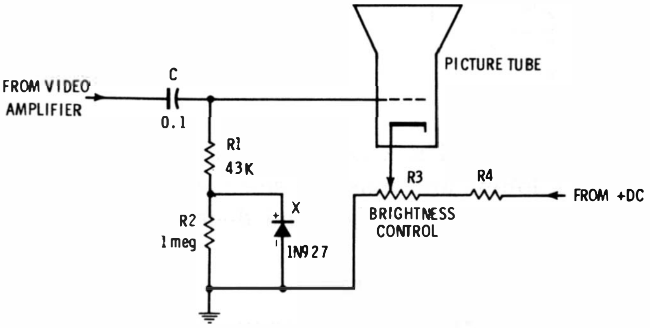

Fig. 1-10. DC restorer.

The DC component may be restored, however, through signal rectification by a germanium diode (*X* in Fig. 1-10) shunted across a part (R2) of the picture-tube grid resistor. *X* is a 1N927 germanium DC-restorer diode.

DAMPER

The *Q* of magnetic deflection coils in TV and radar receivers is high enough for ringing to be produced by the sawtooth deflection currents. A damping resistor shunted across the coil will suppress this effect, but the resistor also robs the coil of current. A reverse-connected silicon diode in series with the resistor (*X* in Fig 1-11) will pass virtually no static current, since it is reverse-biased by the DC power supply; but it will be forward-biased by the back voltage generated by the collapsing magnetic field at the end of the sawtooth sweep, and thus will switch the energy through resistor R in which it will be dissipated to prevent ringing.

The specified 1N1413 silicon diode has a peak-reverse rating of 2,400 volts. At this voltage its reverse-leakage current is only 1 microampere. The value of resistor R will be between 100 and 500 kilohms and must be selected with respect to DC voltage, peak sawtooth voltage, and deflection-coil inductance in a particular circuit.

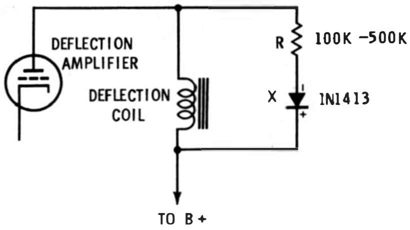

Fig. 1-11. Damper.

CLAMPING CIRCUITS

A diode clamp, like a DC restorer, is used to set or reestablish a DC reference potential in an AC circuit. Thus, either peak of an AC wave may be held to zero or to a selected amplitude, either positive or negative.

Fig. 1-12 shows a typical input wave which oscillates about the zero axis, and the corresponding output wave delivered by each of four clamping circuits. These are the simplest possible circuits, in which a clamping diode (X) shunts a conventional resistance-capacitance coupling circuit (RC). In 1-12A, the reference is clamped at zero, and the output signal swings between zero and a positive maximum amplitude determined by the peak input amplitude and rectification by the diode. Action of 1-12B is similar, except that the diode is reversed and the output swings between zero and a negative maximum amplitude. The circuits in Figs. 1-12C and D provide, instead of zero, a reference level corresponding to a desired positive (+E) or negative (−E) amplitude. The DC reference voltage is obtained from a battery, as shown, or from a power supply and voltage divider. In Fig. 1-12C, the output is positive-going and swings between the positive reference value (+E) and a maximum amplitude determined by the input amplitude. In Fig. 1-12D, the output is negative-going and swings between the negative reference value (−E) and a maximum amplitude which is determined by the amplitude of the input signal.

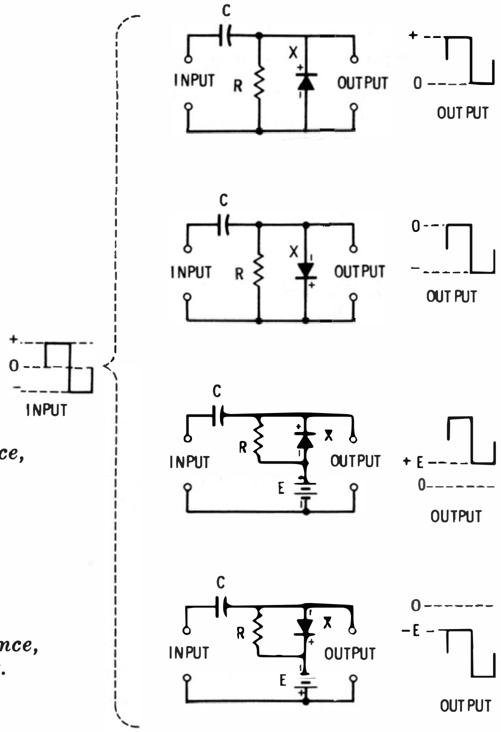

(A) Zero reference, positive clamping.

(B) Zero reference, negative clamping.

(C) Positive reference, positive clamping.

(D) Negative reference, negative clamping.

Fig. 1-12. Clamping circuits.

Diodes of all types may be used in clamping circuits; however, they must be rated to withstand safely the combined applied AC and DC voltages. The R and C values in the coupling network must be chosen in the usual manner for optimum time constant at the desired operating frequency.

SYNC SEPARATOR (SYNC CLIPPER)

Diode-type sync separators are not often found in present-day regular production TV receivers. However, this simple device will be preferred to the triode type in some transistorized TV circuits and in home-designed receivers in which complexity and size must be minimized.

Fig. 1-13 shows one type of diode sync separator. This is essentially a shunt-diode rectifier with an additional resistor (R2) in series with the diode. The output signal is taken across R2. In this arrangement, the positive-going video signal, which contains picture information, sync, and blanking pulses, is applied to the circuit through coupling capacitor C. Diode-rectified current develops a DC voltage across R1 (top negative, bottom positive) and this voltage charges *C*. This capacitor remains charged at this level, equal to input signal E, because of the time constant CR1. The diode is biased to cutoff and the output is zero. The sync pulses drive the diode positive into forward conduction and produce corresponding output pulses which are delivered to the sync amplifier.

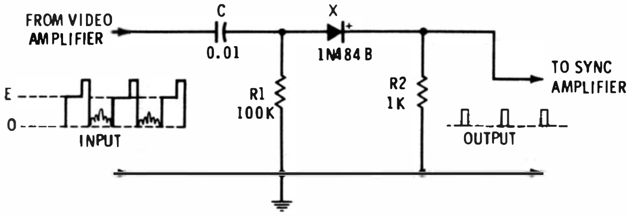

Fig. 1-13. Sync separator.

A 1N484B very low-leakage germanium diode (X) is used in this circuit. Capacitance C and resistances R1 and R2 may require some adjustment in individual circuits.

HORIZONTAL PHASE DETECTOR

Fig. 1-14 shows a phase detector for horizontal AFC in a TV receiver (in this case, the arrangement used in Philco Model TV7L40, but typical of the application).

Since the frequency limit is not high, the wide-band characteristics of germanium and silicon are not needed. Conse-

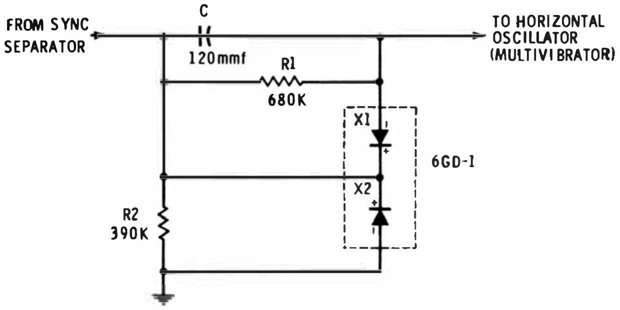

Fig. 1-14. Horizontal phase detector.

quently, a 6GD-1 dual selenium diode (X1 and X2) may be used in this application.

FM DYNAMIC LIMITER

A simple subcircuit composed of a capacitor, resistor, and high-conductance diode may be connected in parallel with the primary winding of an FM discriminator (or ratio detector) transformer to provide dynamic limiting action. (Fig. 1-15 shows the arrangement.) In this circuit, *T* is the regular discriminator transformer.

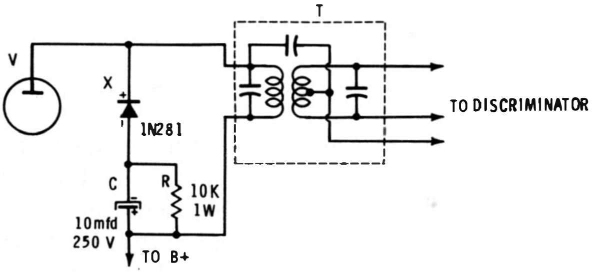

Fig. 1-15. FM dynamic limiter.

Here, a portion of the plate current of the last IF tube (V) flows through resistor R and the 1N281 high-conductance germanium diode (X) in series. This develops a diode self-bias voltage across resistor R. The high capacitance of *C* tends to maintain this voltage. The biased diode acts as a simple limiter or peak clipper, tending to maintain the signal level despite amplitude excursions.

In a transistor receiver using NPN transistors, the polarity of *C* and *X* will be the same as in Fig. 1-15; for PNP receivers, both should be reversed. Resistance R may require some change; its best value for limiting at a desired signal amplitude depends upon the DC collector voltage.

CONVENTIONAL-DIODE FREQUENCY CONVERTER

The nonlinear conductance of a conventional diode enables the mixing of two signals to obtain a third by heterodyne action. This property is utilized in simple *front-end* converters in which a local oscillator signal is beat with an incoming signal to produce an output signal at a desired intermediate frequency. Fig. 1-16 shows the basic circuit of such a converter.

In this arrangement, C1 and L2 resonate at incoming signal frequency f1, and C2 and L3 resonate at desired intermediate frequency f3. The local oscillator generates frequency f2 of such value that f2 equals f1 − f3. The oscillator, which may be either tube, transistor, or tunnel-diode type, is shown coupled to the converter circuit by means of a low-impedance output coil, but capacitance coupling sometimes is employed. Capacitor C1 is mechanically ganged and electrically tracked with the oscillator tuning capacitor for single-control tuning, but the converter output circuit (C2-L3) is fixed-tuned to the intermediate frequency.

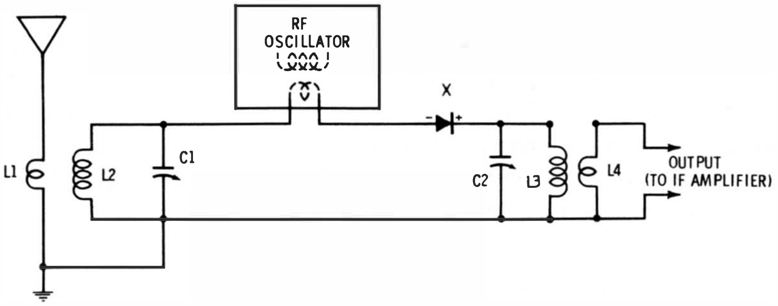

Fig. 1-16. Conventional-diode frequency converter.

At frequencies up to 10 mc, a general-purpose germanium diode, such as 1N34A, will be satisfactory. At higher frequencies, however, a mixer-type germanium diode should be used (for example, 1N72, 1N82, 1N82A). At microwave frequencies (where, incidentally, the lumped-constant tuned circuits may be replaced with lines, cavities, or waveguides), special silicon *point-contact* mixer diodes must be used (for example, 1N21A to 1N21F, 1N23, etc.).

Because the diode does not amplify, this circuit gives no conversion gain. Power in the IF output is provided chiefly by the local oscillator. The conversion loss may be minimized by using high-Q circuits and a good impedance match between converter and IF amplifier, and hand picking the diode for maximum output.

TUNNEL DIODE FREQUENCY CONVERTER

As an active element, the tunnel diode can amplify. In a mixer circuit, therefore, it will provide conversion gain, unlike the circuit shown in Fig. 1-16. But it requires DC power which the previous circuit does not. Inexpensive tunnel diodes will operate at frequencies up to several thousand megacycles at low noise level and with low DC input, and their two-terminal simplicity makes them attractive for converter use.

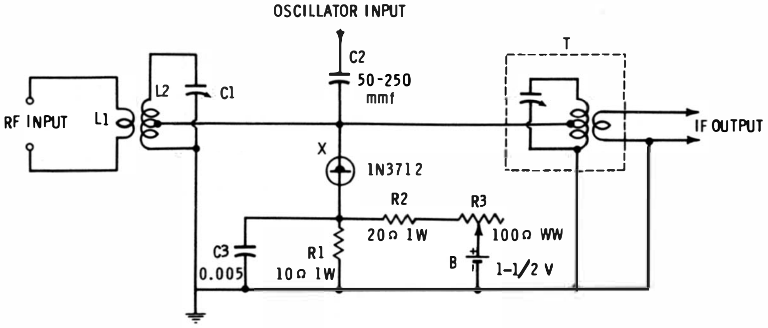

Fig. 1-17. Tunnel diode frequency converter.

Fig. 1-17 shows a typical tunnel-diode converter circuit. Here, C1 and L2 resonate at the incoming-signal frequency. *T* is a transistor-type IF transformer. The local oscillator, which may be either tube, transistor, or tunnel-diode type, is coupled to the converter circuit through capacitor C2; oscillator frequency f2 is chosen with respect to incoming-signal frequency f1 and intermediate frequency such that f2 = f1 − f3.

By adjustment of R3, the DC operating point of the 1N3712 germanium tunnel diode (X) is set within the negative-resistance region of the diode forward conduction characteristic. Since the diode is tapped down the primary of IF transformer T, it looks into a low impedance. If the negative resistance of the diode exceeds this impedance, however, the circuit will oscillate. Maximum gain is obtained just short of oscillation, and for this condition the resistance of R1 may require some adjustment with individual diodes.

VARACTOR AFC CIRCUIT

The *varactor* is a specially processed junction diode which acts as a variable capacitor when its DC reverse voltage is varied. The DC leakage current is practically zero so that this device is essentially voltage-operated.

Fig. 1-18 shows an automatic frequency-control circuit utilizing the property of voltage-variable capacitance. Here, DC voltage from the discriminator of an FM receiver is applied to varactor C2 (V56 silicon *Varicap*) through an RF filter system (RFC-C3-C4-R1-R2). This voltage varies according to the degree of tuning of the receiver to the FM signal, and varies the capacitance of C2 proportionately. C2 is connected across the local oscillator tank through DC-blocking capacitor C1, and retunes the oscillator by an amount proportional to the DC received from the discriminator or ratio detector. Thus, drift of the local oscillator detunes the receiver from the signal and this results in a DC input signal to the

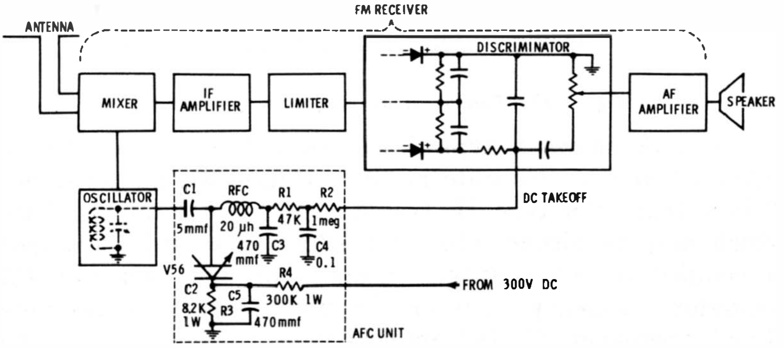

Fig. 1-18. Varactor AFC circuit.

AFC circuit. The DC voltage, in turn, changes the capacitance of the varactor, and this corrects the oscillator frequency to retune the receiver to the signal.

The operating point of the varactor is set by an 8-volt DC bias obtained from the receiver power supply through voltage divider R3-R4. If the power-supply output is some value other than 300 volts, resistance R4 must be proportioned accordingly to give 8 volts at the junction of C2 and R3.

VARACTOR TUNING OF RECEIVER

The voltage-variable capacitance of the varactor may be employed for the remote tuning of a radio receiver by means of a DC voltage—no DC power is required.

Fig. 1-19 shows the scheme. The conventional two-gang variable capacitor in the receiver is replaced with V-100 Varicap silicon varactors (C3 and C4 in Fig. 1-19). Each of these units provides a capacitance range of 57 to 260 mmf for an applied potential of zero to 15 volts DC. The local oscillator and RF (amplifier, 1st detector, or converter) stages thus are tuned simultaneously by the DC control voltage.

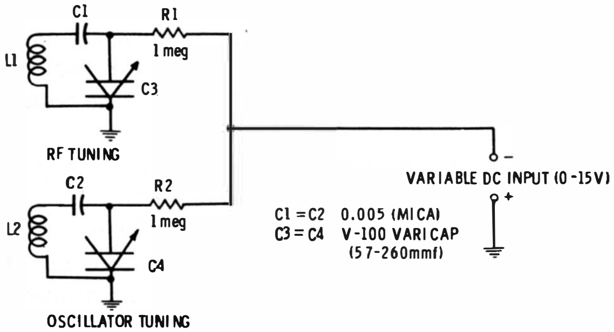

Fig. 1-19. Varactor tuning of receiver.

In each tuned circuit, a blocking capacitor (C1, C2) protects the varactor from any DC voltage that might be present in the receiver stage. The 1-megohm resistors R1 and R2 act both as RF chokes and as isolation resistors for the DC control-voltage supply. This eliminates loading of the tuned circuits by stray capacitance of the supply.

Where higher tuning capacitances are required, two or more varactors may be connected in parallel.

BIASED DIODE DETECTOR

In some instances, a small forward bias will increase the output of a detector stage employing a general-purpose germanium diode, such as a 1N34A. Since this DC voltage is applied to the diode in series with the amplitude-modulated RF voltage, it must be developed across a very low resistance, otherwise the signal will be attenuated by the DC supply.

Fig. 1-20 shows the circuit. In this arrangement, the amplitude-modulated RF signal is tuned-in by means of C1 and L2. The DC bias, variable between 13.6 and 148 millivolts by adjustment of rheostat R1, is developed across a 10-ohm resistor, R3. The AF output of diode X, together with the DC bias current flows through the primary of output transformer T. The primary of this transformer has low DC resistance to minimize attenuation of the bias current.

With a constant-amplitude RF-input signal, the AF output is measured first (with an oscilloscope or AC VTVM) with the battery disconnected and R3 temporarily short-circuited. Then, with the short circuit removed and the battery connected, the bias is adjusted to the point at which the AF output increases over the original value. The RF input must be maintained at the same amplitude during each of these steps.

It is advisable to check the AF signal with an oscilloscope or harmonic distortion meter before and after the DC is applied, to verify that the increase in output is due to a boost in amplitude and not just to added distortion.

This is not a method of amplification. It is only a means of increasing the ratio of diode output to input by shifting operation to a more favorable point on the diode forward conduction curve. Some diodes give better performance when biased than do others of the same type; other diodes operate best without the bias.

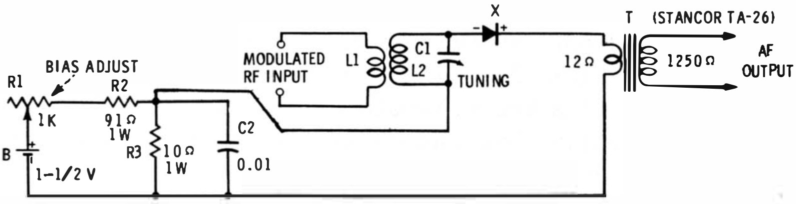

Fig. 1-20. Biased diode detector.

CHAPTER 2

TRANSMITTER CIRCUITS

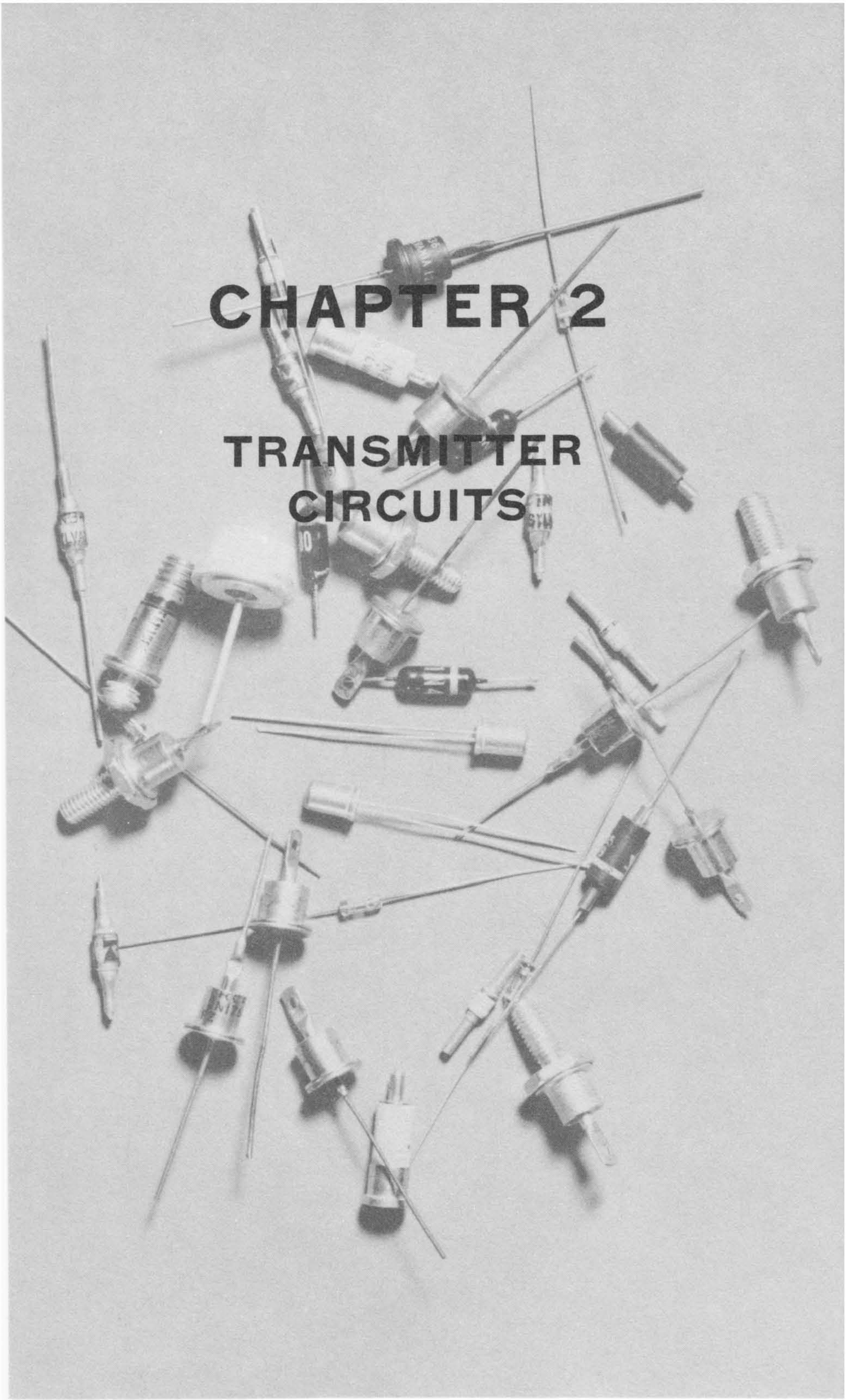

Transmitter Circuits

Semiconductor diodes may be used in various ways in radio transmitters, in auxiliary devices for transmitting stations, and in instruments for adjusting transmitters. These applications depend on the rectifying, modulating, demodulating, and distorting properties of passive diodes. Active diodes, such as the varactor and tunnel diode, perform direct transmitter-circuit functions because of the ability of these units to amplify, multiply frequency, or oscillate. Active diodes often greatly simplify a circuit which otherwise would employ tubes or transistors.

ANTENNA CURRENT METER

Fig. 2-1 shows the circuit of a low-resistance radio-frequency ammeter. This instrument may be used for measuring current at frequencies of up to 200 mc in antennas, transmission lines, and tank circuits.

RF current flows through 1-ohm noninductive resistor R1 across which it develops a voltage drop. This voltage is rectified by the 1N34A germanium diode (X), and the resulting DC

Fig. 2-1. Antenna current meter.

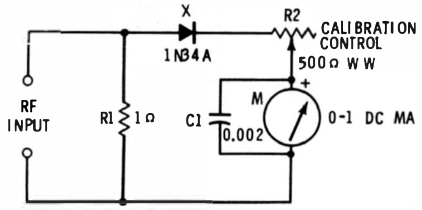

deflects the 0-1 DC milliammeter (M). Rheostat R2 serves to limit the meter current for calibration purposes, and C1 is a radio-frequency bypass capacitor.

The range of this instrument is 0-1 ampere rms, but higher ranges may be provided by connecting suitable noninductive shunt resistors in parallel with the RF INPUT terminals.

To calibrate the instrument, apply an accurately known 1-amp RF current to the RF Input terminals, and adjust R2 for exact full-scale deflection. Note also the reading of milliammeter M for intermediate current values, such as 0.1, 0.2, 0.3, 0.4, 0.5, 0.6, 0.7, 0.8, and 0.9 ampere. (It is necessary that this circuit be calibrated at these points, using a variable RF supply and an external RF ammeter, because of variations in diode curves and meter internal resistance.) Using these readings, prepare either a curve or chart or a special ampere scale for the meter. NOTE: It is possible also to calibrate the meter at an audio frequency, such as 1,000 cps, if the RF source and standard meter are not available. The final accuracy will be somewhat lower, however.

CARRIER FAILURE ALARM

When a transmitter leaves the air accidentally, the interruption can be both confusing and costly, the amount depending on the class of service supplied by the station. It is important, therefore, that the operator be alerted immediately on carrier failure.

Fig. 2-2 shows the circuit of a simple carrier failure alarm. Here, the signal is picked up with a short, vertical, whip antenna. The inductance of coil L is chosen to resonate at the

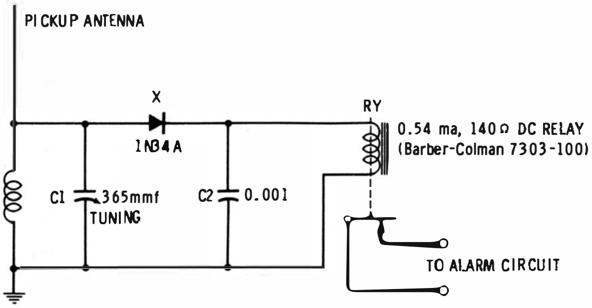

Fig. 2-2. Carrier failure alarm.

signal-carrier frequency at some setting of the 365-mmf tuning capacitor (C1). The 1N34A germanium diode (X) rectifies the RF signal, and the resulting DC operates the 0.54-ma, 140-ohm DC relay (RY).

As long as the signal is present, the DC keeps the relay contacts open. When the signal is interrupted, however, the DC drops to zero, and the relay contacts close, operating a bell, buzzer, light signal, or other type of alarm device in the external circuit.

This type of carrier failure alarm has the advantage of small size, excellent stability, good sensitivity, and extreme simplicity. Furthermore, it requires neither a power supply nor attended service. Being reasonably broad in response, its tuning may be left untouched for protracted periods.

CONVENTIONAL-DIODE FREQUENCY MULTIPLIER

The nonlinear conductance of the germanium diode may be utilized for frequency multiplication at low-RF power levels. A simple passive frequency doubler, tripler, or quadrupler thus may be obtained if sufficient amplification is available for building up the signal amplitude after multiplication.

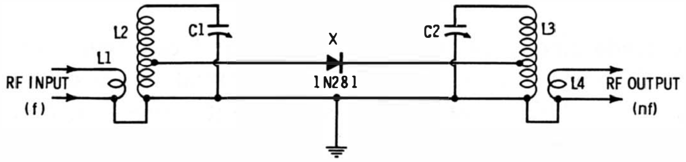

Fig. 2-3. Conventional-diode frequency multiplier.

Fig. 2-3 shows the circuit of this type of multiplier. In this arrangement, C1 and L2 are chosen to resonate at input frequency *f*. This frequency is to be multiplied *n* times by the circuit. C2 and L3 resonate at the desired higher frequency, *nf*. The 1N281 high-conductance germanium diode is tapped across one-third of the turns of L2 and one-third of those of L3 for improved impedance match.

In adjusting the circuit, it is only necessary to tune C1 to the incoming frequency and C2 to the desired harmonic frequency. The 1N281 is a 60-volt, 100-ma unit so that it will handle a respectable amount of low power.

BALANCED MODULATOR CIRCUIT

In a single-sideband transmitter, RF carrier voltage and AF modulation voltage are presented simultaneously to a balanced modulator. Because of the circuit symmetry, the modulator suppresses the carrier and delivers an output consisting of the upper and lower sidebands (RF + AF, and RF − AF) produced by the modulation process. A bandpass filter is then used to select the desired upper or lower sideband. Balanced modulators may employ tubes, transistors, or diodes.

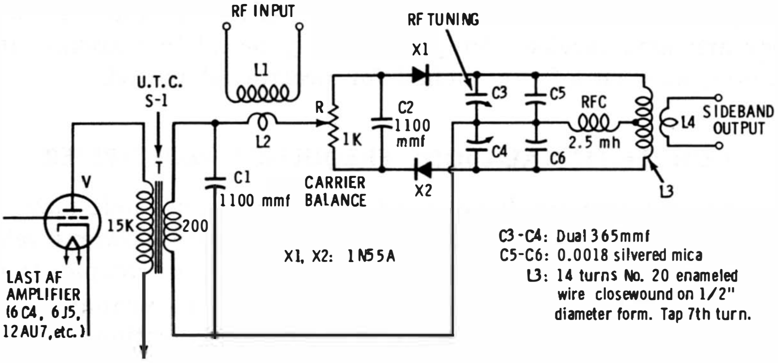

Fig. 2-4. Two-diode balanced modulator.

The diode circuit is simple, compact, and requires no power supply. It has the disadvantage that it must operate at a low power level. This is seldom inconvenient, since suitable RF amplification may be provided following the modulator, although it may not be balanced as closely as some tube circuits, even with matched diodes. However, the balance is satisfactory for amateur and experimental purposes. Diode-type balanced modulators are found in many single-sideband exciters.

Fig. 2-4 shows a popular variety of two-diode balanced modulator circuit. Here, a four-arm bridge is formed by X1, X2, top half of L3, and bottom half of L3. This bridge initially is excited by an RF voltage coupled into the circuit by L2. Now, if the diodes were matched exactly and L3 perfectly center-tapped, the bridge would be exactly balanced and no RF output voltage would appear at L4. But since this high degree of matching is seldom obtained in practice, rheostat R is provided for correcting the circuit. When *R* is set to compensate for the asymmetry of the circuit, the RF output voltage is reduced to a null level very close to zero. This null holds for only one value of RF input voltage, however, because diode resistance changes with voltage. When the AF voltage is applied, the increase changes the resistance of the diodes, the bridge therefore unbalances, and RF appears at the output. Audio frequencies cannot pass through the L3-L4 circuit. The RF energy that emerges is a combination of the upper and lower sidebands. When the AF signal ceases, the RF output again falls to zero.

In this circuit, X1 and X2 are 1N55A 150-volt general-purpose germanium diodes. For good balance, capacitors C5 and C6 must be matched within 1%, and coil L3 must be accurately center-tapped. C3 and C4 are the two sections of a dual 365-mmf variable capacitor. The C3-C4-C5-C6-L3 combination has been chosen for operation in the 75-meter amateur phone band. L1 is the RF oscillator tank coil, and L2 a 2- or 3-turn pickup coil mounted near L1. The oscillator must develop an RF signal of approximately 2.5 volts rms across L2.

Adjust the circuit initially in the following manner:

1. With the AF switched off, apply the RF signal.
2. Adjust tuning capacitor C3-C4 for maximum RF output, as indicated by peak deflection of a sensitive RF VTVM or oscilloscope at the SIDEBAND OUTPUT terminals.
3. Carefully adjust *R* to reduce the RF output to zero—The modulator circuit is now balanced.
4. Apply the AF signal, noting that the RF indicator deflects.

NEUTRALIZATION INDICATOR

Fig. 2-5 shows the circuit of an untuned meter-type indicator sensitive enough to show the last remnant of oscillation during the process of neutralizing a transmitter stage.

If a 1-inch meter is used, the entire instrument may be housed in a transparent plastic case or bottle to protect the operator from electric shock and may be used as a probe. When using the instrument, coil L is held near the tank coil of the stage being neutralized. Before complete neutralization, the stage will oscillate and meter M will be deflected full scale by the DC output of rectifier diode X. As neutralization progresses, the oscillation becomes less intense and the deflection decreases proportionately, finally reaching zero when neutralization is complete.

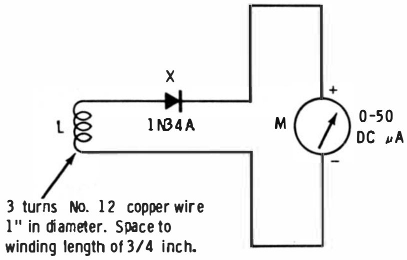

3 turns No. 12 copper wire
1" in diameter. Space to
winding length of 3/4 inch.

Fig. 2-5. Neutralization indicator.

TUNNEL DIODE CW TRANSMITTER

A tunnel-diode RF oscillator makes the simplest possible low-powered CW transmitter. The circuit is shown in Fig. 2-6. Although this transmitter has an unloaded DC input of only 1.4 milliwatt, it can give surprisingly good account of itself on a clear frequency with a sensitive receiver.

The heart of the circuit is the 1N3720 germanium tunnel diode (X). This diode will oscillate in suitable circuits at frequencies up to 0.67 kilomegacycle. In this transmitter, the oscillation frequency is determined principally by tuning capacitor C2 and plug-in coil L1. (For the amateur bands, Barker & Williamson Type JEL coils provide main coil L1 and link-coupling coil L2 in each single plug-in unit.) The RF output may be applied to an antenna through a suitable tuner or coupler.

To adjust the transmitter, connect an RF VTVM temporarily across L1. If a VTVM is not available, use an RF indicator such as the unit shown in Fig. 2-5. Depress the key and adjust R1 for peak deflection of the meter. This indicates that the DC bias has been set to the most favorable point along the negative-resistance curve of the diode. Operate the key rapidly several times to determine that oscillation starts readily when the key is depressed; if it does not, readjust R1 for quick starting. Disconnect the VTVM and tune C2 to the desired frequency, as indicated by a frequency meter or calibrated receiver. It sometimes is necessary to reset R1 when C1 is tuned.

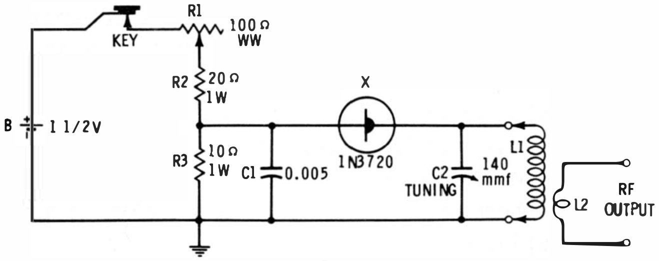

Fig. 2-6. Tunnel diode CW transmitter.

TUNNEL DIODE PHONE TRANSMITTER

The diode transmitter shown in Fig. 2-6 may be modulated by applying an AF modulating voltage in series with the DC bias, as shown in Fig. 2-7. Otherwise, the transmitter circuit is the same as that given in Fig. 2-6 and the operating instructions are the same. The RF output is frequency modulated, hence C2 and L1 should be chosen for resonance at a frequency at which FM is lawful.

Carbon microphone M receives its DC from the same 1.5-volt battery (B) that biases tunnel diode X. The bias current is adjusted by means of rheostat R2. The AF output of the microphone is superimposed upon the diode bias by transformer T. The low-impedance (16-ohm) secondary of this transformer has low DC resistance (1.4 ohms), necessary to minimize effect on the negative resistance of the diode. The

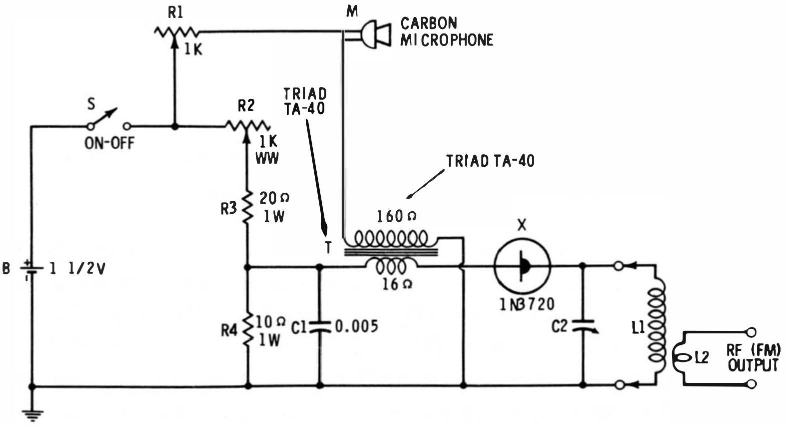

Fig. 2-7. Tunnel diode phone transmitter.

amount of FM swing depends upon the AF amplitude, hence R1 acts as an FM control; the swing is maximum when microphone output is highest. When the swing is low (narrow-band FM), the signal may be received on an AM receiver detuned to one side of the center frequency of the signal.

Since this type of transmitter is readily subminiaturized, it is finding increased application as a wireless microphone and RF detectaphone.

VARACTOR AMPLITUDE MODULATOR

A low-powered CW transmitter, such as a transistorized unit, may be amplitude modulated externally by means of the varactor-tuned antenna coupler (L1-L2-C1-C2) (Fig. 2-8A). This coupler is tuned to the carrier frequency by V-100 Varicap C2, the capacitance of which is varied by adjusting rheostat R2 to vary the varactor DC bias. The inductance of L2 is chosen such that the circuit will resonate at the carrier frequency when the capacitance of C2 is adjusted to 80 mmf. The circuit is tuned entirely by C2; C1 is a blocking capacitor to

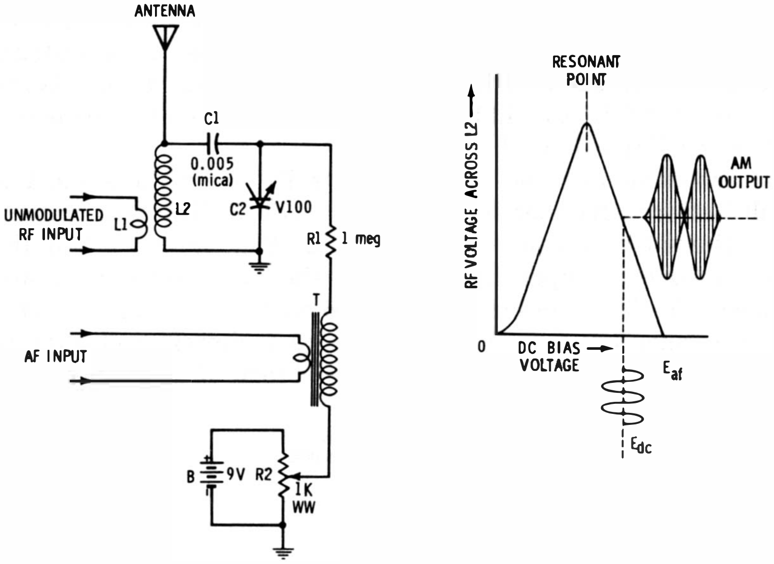

(A) Modulator circuit. *(B) Modulator performance.*

Fig. 2-8. Varactor amplitude modulator.

keep L2 from short-circuiting the DC bias, and its reactance is negligible in the circuit. L1 is a link-coupling coil.

The AF modulation is applied in series with the DC bias, by means of transformer T which has a 2:1 or 3:1 stepup turns ratio. Because of the extremely high resistance of the varactor, virtually no audio power is required. An AF voltage of 1.5 volts rms should be developed across the secondary of *T*. The modulation voltage may be derived from a one- or two-stage transistor speech amplifier or a carbon microphone.

Fig. 2-8B shows operation of the circuit. Note that the circuit is tuned to the high-frequency side of resonance by adjusting the DC bias to the level E_{dc} (approximately −7 volts). The AF voltage (E_{af}) is superimposed upon E_{dc}. This causes the bias to swing above and below E_{dc} at the AF rate. The resulting voltage across L2 therefore has the amplitude-modulated shape shown by the output pattern in Fig. 2-8B.

For adjustment, R2 is set for best linearity of modulation, and the AF amplitude for desired percentage of modulation. An oscilloscope, coupled to L2, serves as the monitor.

VARACTOR FREQUENCY MODULATOR

A low-powered tube or transistor oscillator stage in a transmitter may be frequency modulated by means of a varactor-tuned tank circuit. An AF voltage applied to the varactor in series with its DC bias tunes the tank above and below resonance at the AF rate, thus producing an FM output. The FM swing is proportional to the AF voltage.

Fig. 2-9 shows the circuit. The capacitance of varactor C3, a V33 Varicap, may be varied from 39 to 85 mmf by adjusting the DC bias from zero to −3 volts, by means of potentiometer R2. The inductance of L1 is chosen such that the oscillator is tuned to the desired center frequency when the varactor capacitance is set to 50 mmf. This corresponds to a DC bias of 1.5 volts and places the operating point along the steepest portion of the varactor voltage-capacitance curve. The tank circuit is isolated from the tube plate or transistor collector by capacitor C1 which blocks DC voltage coming from the tube. Similarly, a second blocking capacitor (C2) prevents L1 from short-circuiting the varactor DC bias. L2 is a one- or two-turn link-coupled output coil.

Audio voltage is applied to the circuit through transformer T which has a 2:1 or 3:1 stepup turns ratio. The maximum voltage developed across the secondary of *T* should be between 2 and 3 volts rms. This voltage, being in series with the DC bias, swings the latter above and below the 1.5-volt level at which the tank is tuned to the desired center frequency. This detunes the oscillator above and below the center frequency at the AF rate, thus producing FM output. The FM swing is proportional to the AF amplitude and may be set at a desired width by means of the audio gain control. The AF may be obtained from a transistor- or tube-type speech amplifier or directly from a carbon microphone and battery. Because of the extremely high resistance of the varactor, virtually no AF power is required.

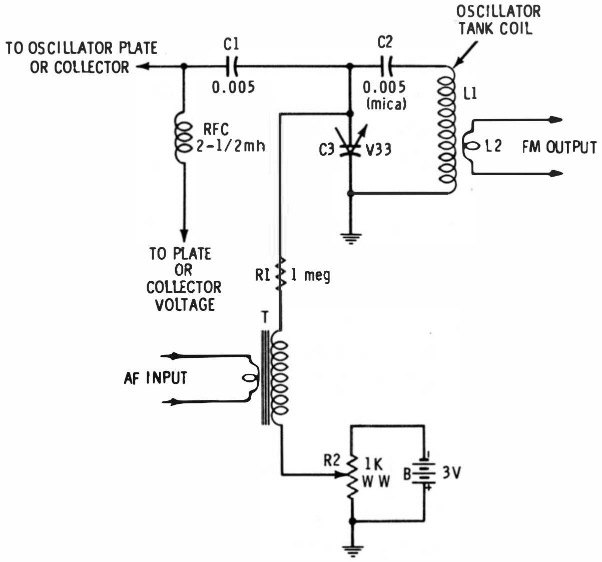

Fig. 2-9. Varactor frequency modulator.

CHAPTER 3

AUDIO CIRCUITS

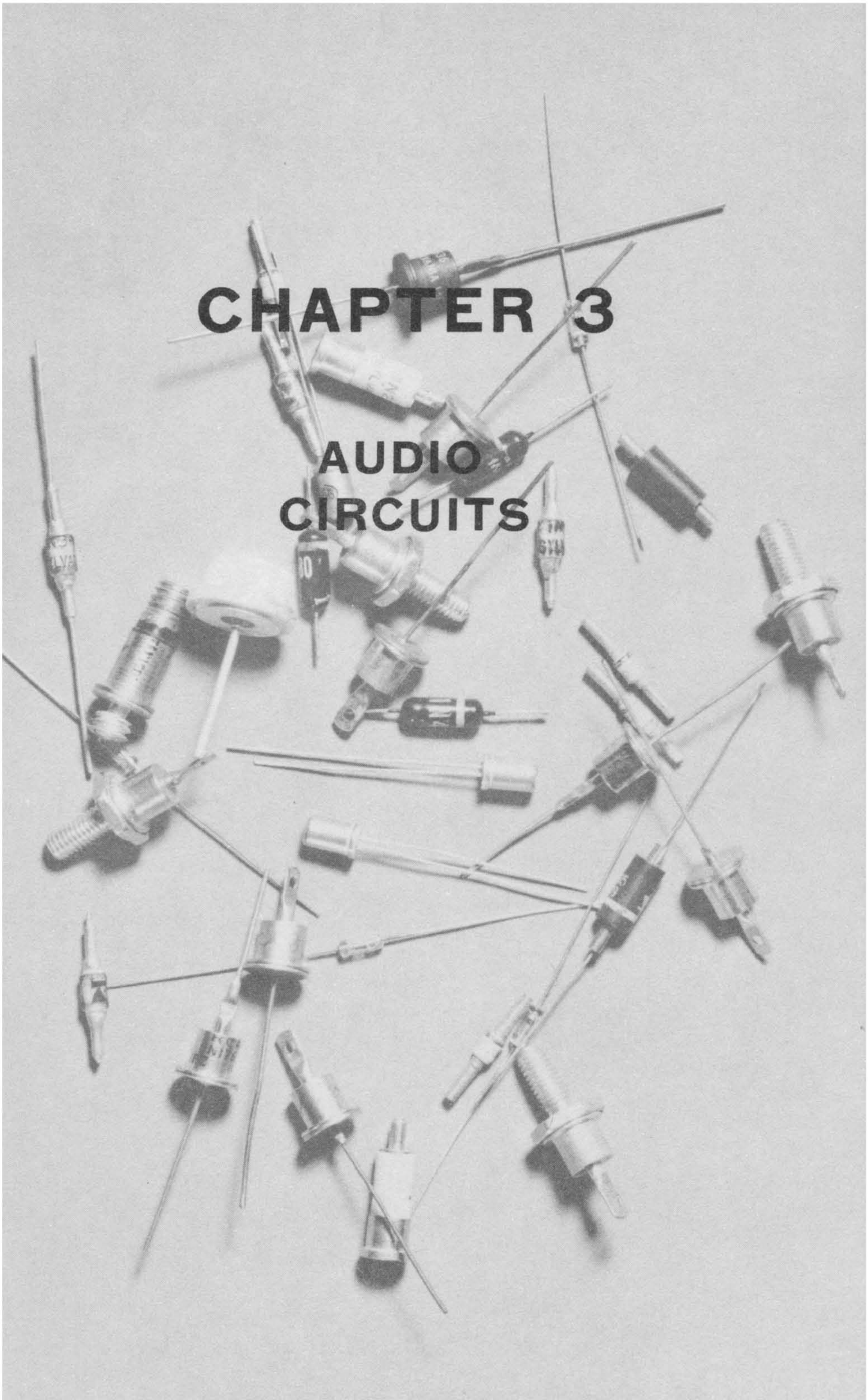

Audio Circuits

Although the semiconductor diode does not figure as prominently in audio-amplifier circuits as it does elsewhere, its applications in that area are noteworthy. Both active and passive diodes are used in AF systems to greatly simplify the circuitry needed to perform a given function. This chapter describes typical applications.

LEVEL CLIPPER

Automatic maintenance of signal amplitude at a constant level is often of great importance in AF amplification. For example, such amplitude limiting in the speech amplifier of a radio transmitter results in a higher average modulation level, increasing transmitter effectiveness in spite of variations in voice loudness. The limiting device must operate quickly.

Fig. 3-1 shows the circuit of a simple clipper. Here, each of two 1N81A high-back-resistance germanium diodes is reverse-biased by a 1.5-volt battery (B1 and B2). The AF input

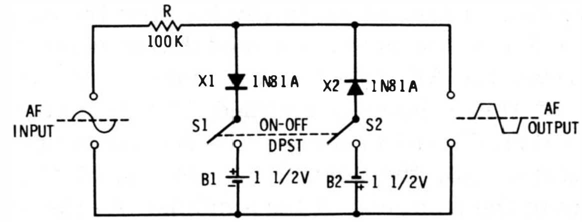

Fig. 3-1. Level clipper.

signal is applied to these biased diodes simultaneously through series resistor R. Because of the bias, diode X1 cannot conduct forward current until the positive half-cycle of signal voltage exceeds +1.5 volts peak; diode X2 cannot conduct forward current until the negative half-cycle of signal voltage exceeds −1.5 volts peak. Accordingly, from zero to the 1.5 volt peak, there is no voltage drop across R, and the output voltage increases uniformly from zero to 1.5 volts peak. But as soon as the peak amplitude of the input signal exceeds 1.5 volts, current begins to flow and produces a voltage drop across R. The higher the input amplitude, the greater the forward current and the higher the voltage drop. The result is that the amplitude of the output signal does not rise higher than +1.5 volts and −1.5 volts.

Because of the high resistance of *R*, the external load of the clipper must be high (500K or more) to minimize insertion loss. Generally, this imposes no hardship, since the clipper may be operated between two tube stages where it works out of a medium-impedance plate into a high-impedance grid. High-back-resistance diodes are employed to minimize reverse current leakage from the batteries. Although batteries are shown in the schematic, the bias voltage may also be obtained from a well-filtered DC power supply through suitable voltage dividers.

The squaring action of the clipper generates harmonics of respectable amplitude, and for this reason the clipper must be followed with a suitable low-pass filter to remove the distortion. The cutoff frequency of the filter depends upon range and fidelity requirements, 2,500 cps or so being common in amplifiers and modulators for voice communication.

AMC RECTIFIER

Another system for automatically limiting the output of an audio amplifier is the automatic modulation control (AMC). In this circuit, the AF output of the amplifier is sampled and a portion of this voltage is rectified. The DC output of the rectifier is then filtered to remove the AF component and applied in series with the normal bias to one of the tubes or transistors in the front end of the amplifier. As the output signal increases, the bias reduces the gain of the amplifier, and vice versa, thus holding the output constant. Although this system is not as rapid in action as the clipper shown in Fig. 3-1, neither does it generate the harmonics produced by the clipper.

Fig. 3-2 shows an AMC rectifier circuit. Lead B is connected to a signal point at or near the output of the amplifier. The sampled signal is applied to a shunt-diode rectifier consisting of C2, gold-bonded 1N277 germanium diode X, and potentiometer R2. Because of the high impedance of this rectifier circuit, the amplifier is loaded only negligibly. The negative DC output of the diode is filtered by C1 and R1, and the resulting negative bias voltage, which is proportional to the AF amplitude, is available at *A*. This voltage, which is continuously variable through adjustment of potentiometer R2, may be applied to the control grid or suppressor of a front-end stage in series with the normal bias of that stage. When a positive bias voltage is needed for some transistor amplifiers, diode X must be reversed.

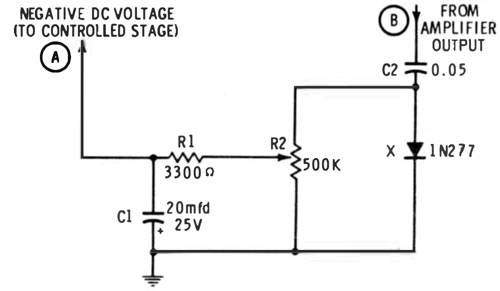

Fig. 3-2. AMC rectifier circuit.

AMC operates in an audio amplifier much the same as AGC does in an RF amplifier or receiver. Unlike an AC-operated audio AGC system, however, AMC utilizes a DC control voltage and therefore is not phase sensitive.

MAGAMP RECTIFIER

Most magnetic amplifiers operate in the audio-frequency spectrum and are finding increasing application in various areas of electronics. They can provide very high gain. If the power supply frequency is made high enough (10 kc or above), a magamp may be used for sound reproduction.

Self-saturation improves the efficiency and control of a magnetic amplifier and is obtained by means of a semiconductor rectifier circuit. Power rectifiers must be used in magamps that deliver power output of 5 watts or more and operate at high voltages (100 volts and above). In low-level units, such as preamplifiers, instrument amplifiers, and control amplifiers, lower-powered signal diodes may be used.

Fig. 3-3 shows a representative magamp circuit. For simplicity, the core is omitted in this schematic. L2 and L3 are the reactance windings, connected phase-bucking to prevent induction into the other two coils. L1 is the control winding, into which a DC control signal is introduced, and L4 is a feedback winding for improving amplifier action through regeneration.

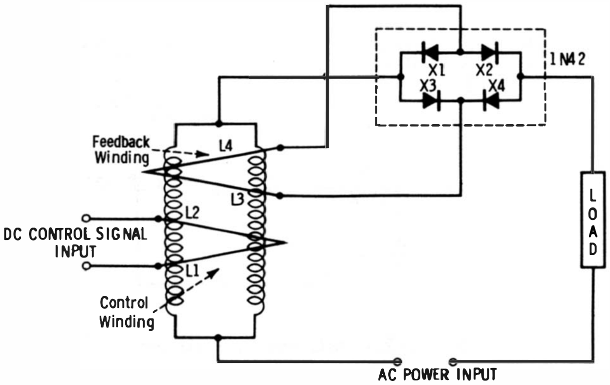

Fig. 3-3. Regenerative magamp.

The output of the magamp is connected to an AC power supply, load device, and the rectifier circuit in series. The rectifier unit, consisting of diodes X1, X2, X3, and X4, has a double function; the load is supplied through two 2-diode legs in parallel (that is, X1-X2 and X3-X4), but the feedback winding is excited by full-wave pulses delivered by the four diodes acting as a bridge rectifier. For best operation, the forward conduction curves of the four diodes should be closely matched. Completely assembled matched units containing four diodes are available under the name *quad* or *varistor*. The 1N42 shown in Fig. 3-3 is a 100-volt germanium plug-in unit which contains four matched diodes.

VOICE-CONTROLLED RELAY

A voice-controlled relay, operated from a speech amplifier, has numerous uses. One of these is to keep a radio transmitter or wired-radio intercom operating only as long as the operator is speaking. This frees the operator from working a switch.

Fig. 3-4 shows a voice-controlled relay circuit. The control signal is picked from any point in the speech amplifier which will yield an AF voltage of at least 2 volts rms at approximately 0.5 milliwatt. C1 is a blocking capacitor to isolate the diodes from DC components in the amplifier. The signal is rectified by the 1N300 silicon junction diodes (X1, X2), and the resulting DC charges capacitor C2 and closes relay RY. Rheostat R is adjusted for closure of the relay on maximum AF signal. When the signal is interrupted, the diodes have no output, but the voltage due to the charge in capacitor C2 holds the relay closed. C2 cannot discharge back through the high reverse resistance of X1, so it discharges slowly through the relay. After an interval, the discharge current reduces the capacitor voltage sufficiently for the relay to drop out. (With the 7,300-mfd capacitor and 3,550-ohm relay specified in Fig. 3-4, this interval is approximately 3.5 seconds.) The *on* interval may be lengthened by increasing the value of C2, or shortened by decreasing this capacitance.

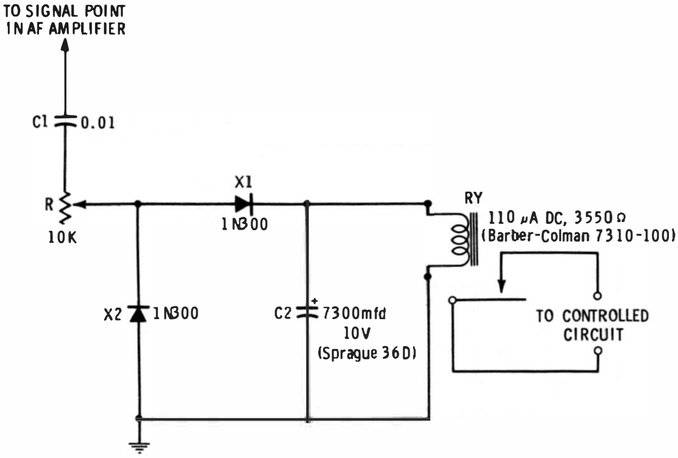

Fig. 3-4. Voice-controlled relay.

TUNNEL DIODE AF AMPLIFIER

Fig. 3-5 is the circuit of an experimental tunnel diode audio amplifier. This circuit provides a gain of approximately 20 db at 1,000 cps and operates into a 100-ohm load. Input impedance is of the order of 200 ohms.

For highest gain and best linearity, the operating point of the 1N3712 germanium tunnel diode (X) must be set to the center of the negative-resistance region of the forward conduction characteristic, by adjustment of rheostat R3. This is done most readily by applying a 10-millivolt rms, 1,000-cps, sine-wave signal to the AF Input terminals and adjusting R3 for highest amplitude and lowest distortion of the output signal, as viewed with an oscilloscope at the AF Output terminals.

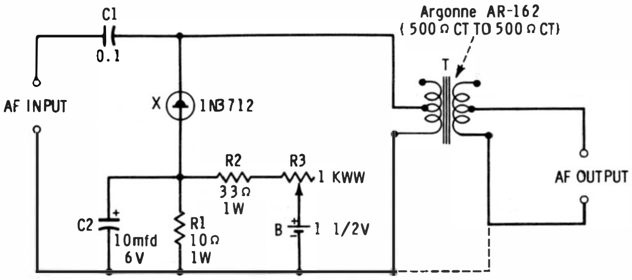

Fig. 3-5. Tunnel diode AF amplifier.

Care must be taken that the circuit does not break into oscillation, either with or without an input signal. To prevent oscillation with some diodes, it may be necessary to alter the resistance of R1.

Output transformer T has a 1:1 turns ratio and very low DC resistance. Only one half of the primary and one half of the secondary are used. The transformer has a full-winding impedance ratio of 500-to-500 ohms.

DIODE AS CATHODE RESISTOR

Automatic bias in a tube-type amplifier or oscillator may be supplied to advantage by a zener diode, as shown in Fig. 3-6. From the various available types, a diode should be selected

Fig. 3-6. Diode as cathode resistor.

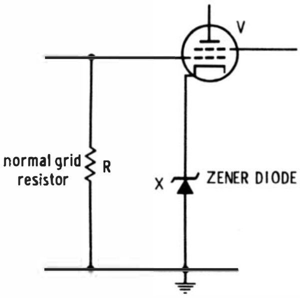

which has the desired bias voltage at the center of its zener region, and for which the maximum DC cathode current of the tube will furnish the corresponding zener current.

The advantages of this scheme are that the tube current can vary considerably without materially changing the bias voltage developed across the diode, and that the dynamic impedance of the diode is so low that no cathode bypass capacitor is required.

CHAPTER 4

POWER SUPPLY CIRCUITS

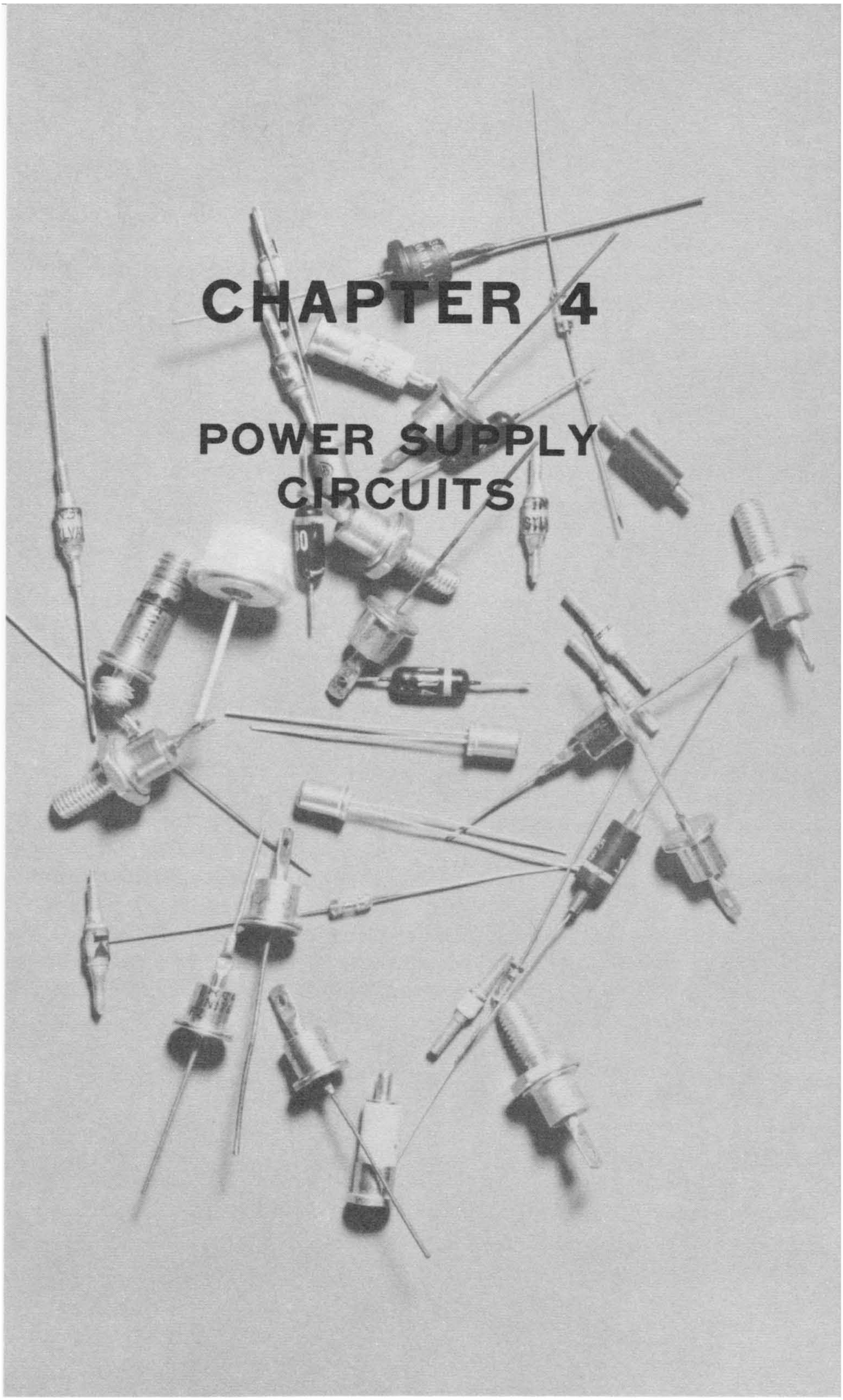

Power-Supply Circuits

Rectification is the basic property of the diode, therefore, diodes are useful in all applications demanding simple conversion of AC to DC. Conventional small-signal diodes, unlike semiconductor power rectifiers, are low-power devices which cannot safely handle more than a few hundred milliwatts at the most. But where only low power is involved, the conventional diode is entirely adequate as a rectifier and, at the same time, is smaller and cheaper than a power rectifier. It lends itself well to subminiature power supplies for transistorized equipment, photoconductive cells, varactors, and thermistors.

In addition to AC rectification, voltage regulation is afforded by diodes—principally the zener diode. This is made possible by the nonlinear conductance of the unit. Unilateral conductivity of the diode also may be used, as in the application shown in Fig. 4-8.

FIVE LOW-LEVEL DC POWER SUPPLIES

Fig. 4-1 shows the circuits and performance curves of five miniature AC line-operated DC power supplies suitable for the operation of low-power devices, such as photoconductive cells, varactors, and conventional transistors, and for supplying fixed bias for tube circuits. Each of these circuits operates on 6.3 volts AC delivered by a small 1.2-ampere filament transformer (T). Higher-voltage secondaries (for example, up to 24 volts) may be used with proportionately higher DC output,

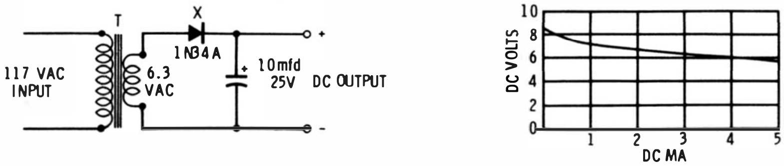

(A) Half-wave.

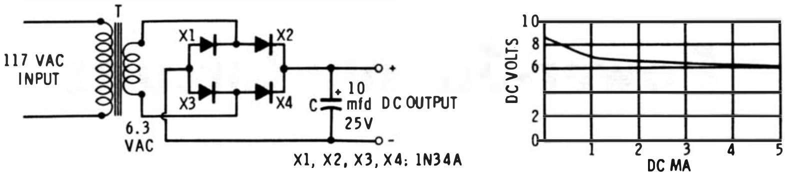

(B) Bridge.

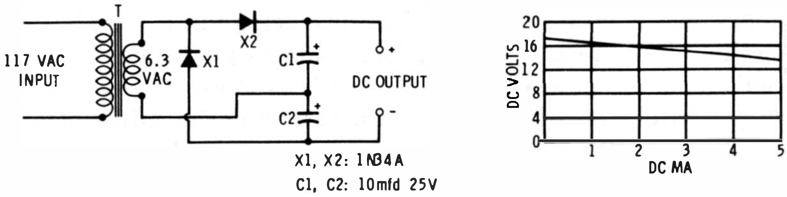

(C) Doubler.

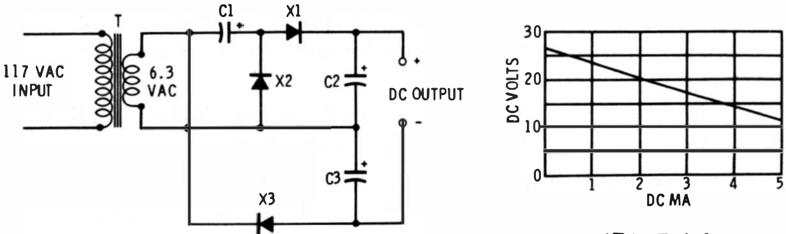

(D) Tripler.

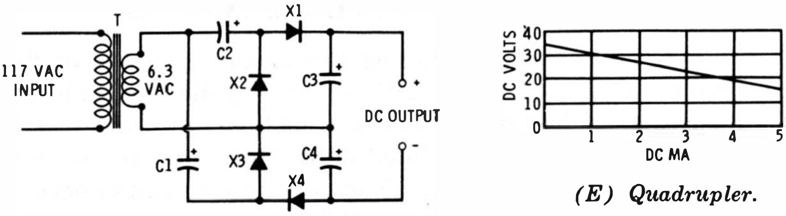

(E) Quadrupler.

Fig. 4-1. Low-level DC power supplies.

provided higher-voltage capacitors are substituted for those shown. The volt-ampere curves show the DC output voltage delivered by each of these circuits at various currents up to 5 milliamperes.

Half-Wave

Fig. 4-1A shows a simple, single-phase half-wave supply. A single 1N34A general-purpose germanium diode (X) is the rectifier. The no-load DC output is equal to the peak value of the 6.3-volts AC input minus the small forward voltage drop in the diode, and is approximately 8.5 volts. This drops to approximately 6 volts at 5 ma. The output ripple is low enough for most applications; however, additional filtration may be obtained by adding a 10-henry choke and 10-mfd capacitor.

Bridge

Fig. 4-1B shows a full-wave bridge rectifier employing four 1N34A general-purpose germanium diodes. The no-load and full-load DC output is the same as for the half-wave circuit, but the ripple frequency is twice that of the power line.

Doubler

Fig. 4-1C shows a voltage-doubler circuit. This circuit delivers a no-load DC output that is more than double the AC input voltage—it is equal to two times the *peak* value of the AC voltage, or approximately 17.7 volts for 6.3 volts rms input. This drops to approximately 13 volts at 5 ma load. Two 1N34A general-purpose germanium diodes are used in this circuit.

Tripler

Fig. 4-1D shows a voltage-tripler circuit. This circuit actually delivers a no-load DC output voltage that is more than triple the AC input voltage—it is 3 times the peak value of the AC voltage, or approximately 26.7 volts for 6.3 volts rms input. This drops to approximately 13 volts at 5 ma load.

Three 1N52A general-purpose germanium diodes having increased peak inverse voltage ratings, are used in this circuit.

Quadrupler

Fig. 4-1E shows a voltage-quadrupler circuit that delivers a no-load DC output voltage which more than quadruples the

AC input voltage—it is four times the peak value of the AC voltage, or approximately 35.5 volts for 6.3 volts rms input. This drops to approximately 14.5 volts at 5 ma load. Four 1N52A general-purpose germanium diodes are used in this circuit.

CONVENTIONAL-DIODE VOLTAGE REGULATOR

The nonlinear forward conductance of a germanium diode at low current levels may be used to stabilize a low DC output voltage against excursions of the DC input voltage. With conventional small-signal diodes, this scheme is practical only when the current drawn from the circuit by an external load is a small percentage of that flowing through the diode.

Fig. 4-2 shows the regulator circuit. The DC input voltage is obtained from a power supply or battery. Resistance R is chosen to set the forward current through diode X to the center of the steepest portion of the diode forward-conduction curve. DC output voltage is taken across the diode. As the input voltage changes, the diode current changes proportionately. But because of the steepness of the curve, the voltage across the diode changes only slightly for a large increase or decrease in current. Thus, the output voltage changes only slightly, although the input voltage fluctuates considerably.

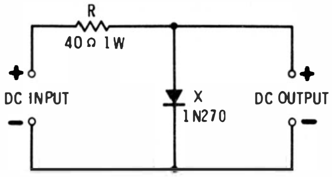

Fig. 4-2. Conventional-diode voltage regulator.

As the output load current approaches the diode current in magnitude, the regulation becomes poorer, since increasingly more current flows through the load and is not subject to control by the diode.

Because of the voltage-divider action of *R* and *X* in series, the output voltage is less than the input voltage. Therefore the input voltage must be properly selected, if a given output voltage is to be realized. This regulator is basically a low voltage scheme, since the most usable portion of the forward current of a conventional germanium diode lies between 0.05 and 0.2 volt.

Practical constants for the circuit shown in Fig. 4-2 are: R is a 40-ohm, 1-watt resistor; and X is a 1N270 gold-bonded germanium diode. At 1 volt input, the diode current is 10 ma and output voltage is 0.6 volt; at 3 volts input, the diode current rises to 50 ma, but the output voltage increases only to 1 volt. Thus, the output voltage changes only 1.67 time for an input voltage change of three times.

TWO ZENER-DIODE REGULATOR CIRCUITS

Zener diodes, because of their lower internal resistance and steeper curve at the operating point, provide considerably better voltage regulation than the conventional diode circuit shown in Fig. 4-2. Fig. 4-3 shows two regulator circuits using these more expensive diodes.

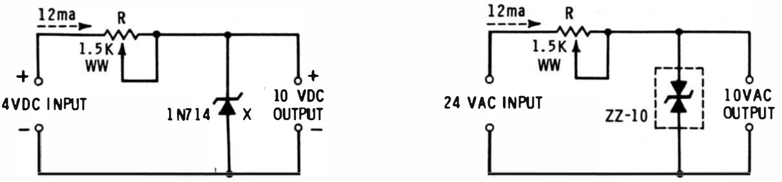

(A) DC circuit. *(B) AC circuit.*

Fig. 4-3. Zener diode voltage regulators.

In the DC regulator (Fig. 4-3A), a 1N714 diode is reverse-biased to its zener point by 12 ma of current flowing from the 24-volt DC supply through limiting rheostat R. (The latter is initially set for this value of current.) The input voltage can change several hundred percent without changing the 10-volt output by more than a few percent in the same direction. The reason for this is the steep slope of the reverse conduction curve within the zener region of the diode (a small change in applied voltage produces a large change in reverse current, and vice versa).

Zener-type regulators are ideally suited for regulation of low voltages. Other devices, such as gaseous tubes, are available for higher voltages; however, several zener diodes may be connected in series to regulate a multiple of the single-diode voltage. Higher-voltage and higher-current diodes than the one shown in Fig. 4-3A are also available.

The AC regulator (Fig. 4-3B) employs a ZZ-10 double-anode zener diode. (Two separate zener diodes may also be connected, back-to-back, for this purpose.) This arrangement holds each peak of the AC output voltage to 10 volts, resulting in a squared output wave.

In this circuit, as in the DC regulator previously described, current-limiting rheostat R is set for a diode current of 12 ma.

Double-anode zener diodes are available with higher voltage and current ratings than the unit shown in Fig. 4-3B.

ZENER DIODE AS REFERENCE ELEMENT

Because the zener diode will deliver a constant DC voltage in a suitable circuit, it may be used as the DC reference source in a transistor-type regulated power supply. In tube-type supplies this function usually is performed by a gaseous regulator tube, but a series string of zener diodes may be used.

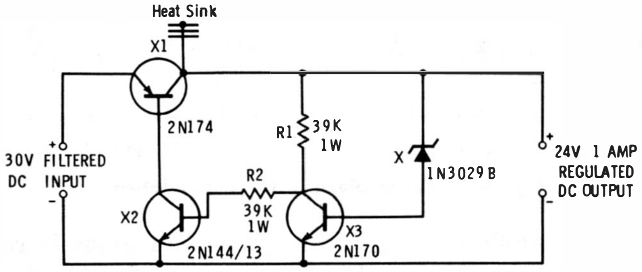

Fig. 4-4. Zener diode as reference element.

In Fig. 4-4, *X* is a 1N3029B zener diode used as the DC reference for transistor X3. Transistors X2 and X3 constitute a DC amplifier which receives its input signal from diode X and delivers its output signal to transistor X1. X1 is connected between the +DC input terminal and +DC output terminal, acting as a series resistor. Its resistance is controlled by current fed from the +DC output terminal back to its base. Thus, when the output voltage rises, the resistance of X1 is increased, and this reduces the output to its initial level. This action is accomplished in the following manner: normally X acts as an extremely high resistance, permitting almost no current to flow into the base of X3. When the voltage at the +DC output terminal exceeds the zener point (24 volts), however, the diode conducts, and this current is amplified by X3 and X2, in that order, and applied to X1. This increases the resistance of X1 and pulls the output back to 24 volts.

This supply delivers 24 volts DC at 1 ampere. The output voltage is regulated within 1%.

ZENER DIODE AS VOLTAGE STANDARD

The constant voltage drop across a zener diode may be used as an accurate standard voltage for instrument calibration and the accurate biasing of electronic circuits. Because the zener diode is a silicon unit, its temperature characteristics are good and the voltage may be relied on within ±5% when only the diode current is controlled, and to a much closer tolerance when the voltage is initially checked with an accurate voltmeter.

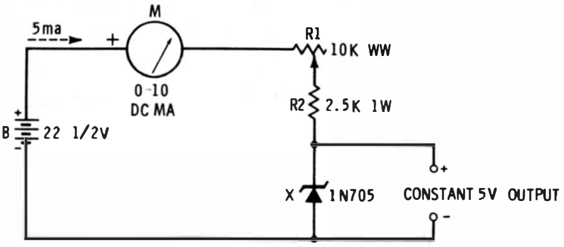

Fig. 4-5. Zener diode as voltage standard.

Fig. 4-5 shows a DC voltage-standard circuit employing a 1N705 zener diode. The output is 5 volts when the current, as read with milliammeter M, is set to 5 ma by adjustment of rheostat R1. While a battery is shown for maximum portability, the input voltage may be obtained also from a rectifier-type power supply.

A standard AC voltage may be obtained with a circuit such as the one shown in Fig. 4-3B, provided an AC milliammeter is inserted for setting the current to the zener level of 12 ma. This type of standard is often used as an oscilloscope voltage calibrator.

These circuits are designed for low voltage output, but higher standard voltages may be obtained with zener diodes having higher voltage rating, or by operating a suitable number of zener diodes in series.

DC BIAS SUPPLY

Fig. 4-6 shows the circuit of a compact and inexpensive DC unit for supplying fixed bias to tubes in a radio or TV receiver or audio amplifier. Filtered output voltages are −1, −2, −3, −5, and −8.5 volts.

The AC input power is taken from the 6.3-volt filament (heater) winding of the power transformer in the receiver or amplifier. Since this bias supply draws only 170 microamperes, it will not upset the filament circuit. The AC is rectified by a 1N34A general-purpose germanium diode (X). (At the power-line frequency, a small selenium diode also might be used.) The DC is filtered by C1, C2, and R1. A 50,000-ohm voltage divider (R2 to R6) supplies the five bias voltages. If a 50,000-ohm wirewound resistor with sliding clips is used, the clips may be set to the various voltages shown (or to any other desired values) with the aid of a DC VTVM. If fixed resistors are used, the odd values are made up as follows; R2 = 15K + 5.6K, R3 = 11K + 750 ohms, R4 = 5.6K + 300 ohms, R5 = 5.1K + 750 ohms, and R6 = 5.6K + 300 ohms. All resistors are one-half watt.

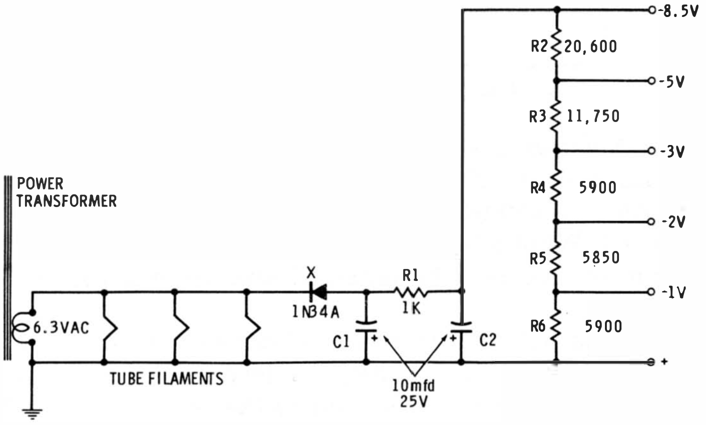

Fig. 4-6. DC bias supply.

FREE-POWER SUPPLY

Fig. 4-7 shows the circuit of a free-power supply which delivers DC voltage for operating transistors and other low-current devices. It is so called because the power is taken from the air at no cost to the user.

This supply is essentially a broadcast-band crystal receiver tunable from 540 to 1,600 kc. The DC output current of the 1N279 high-conductance germanium diode (X) develops the DC output voltage across 1,000-ohm resistor R. Capacitor C2 effectively bypasses the audio modulation in the received signal, rendering the output voltage a smooth DC.

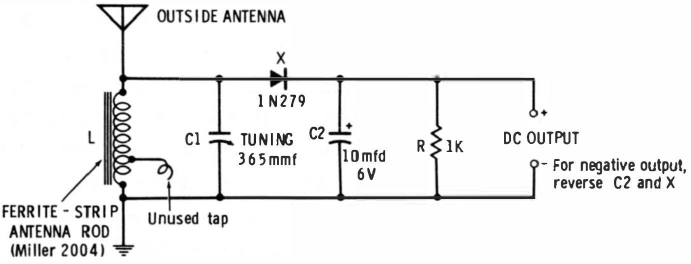

Fig. 4-7. Free-power supply.

The output voltage magnitude depends upon the strength of the received signal. For highest output, therefore, the strongest and/or nearest local broadcast station should be tuned in. A good outside antenna and ground are essential.

DC PROTECTOR FOR TRANSISTOR CIRCUITS

Some transistors are sensitive to power-supply polarity and may be damaged if the supply polarity is reversed. Fig. 4-8 shows how a diode may be connected as a one-way valve in series with the DC supply line within the transistorized equipment to prevent such damage.

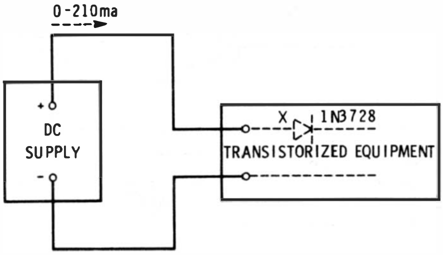

Fig. 4-8. DC protector for transistorized circuits.

Here, X is a 1N3728 subminiature silicon diode. Its polarity in the circuit is such that it passes forward current into the equipment. If the power supply inadvertently is reversed, the diode is then polarized for reverse current, which for the silicon diode is so tiny that the power supply may be considered to have been switched off.

This switching action is instantaneous and very effective. The diode will pass as much as 210 ma to the equipment at a maximum voltage loss of only 1.1 volts across the diode (the power-supply voltage may be increased by this amount). This will be sufficient for some power transistors, as well as all small-signal types. When the polarity is reversed, the diode resistance becomes more than 5,000 megohms. This is equivalent to an open switch, since with a 20-volt supply the current flowing into the equipment is less than 0.004 microampere.

For operating currents higher than 210 ma, heavier-duty silicon diodes may be used with comparable results.

DIODE IN TRANSISTOR BIAS NETWORK

For maximum stability, a stiff voltage divider, operated from the main power supply, is used to furnish DC base bias to a common-emitter-connected transistor. If a zener diode biased to its zener region is used as the bottom section of the divider, the regulating property of this type of diode will provide a stable bias voltage.

In Fig. 4-9, resistor R1 and zener diode X form the bias voltage divider. Resistance R1 must be chosen with respect to the power supply voltage (E) so that zener current will flow

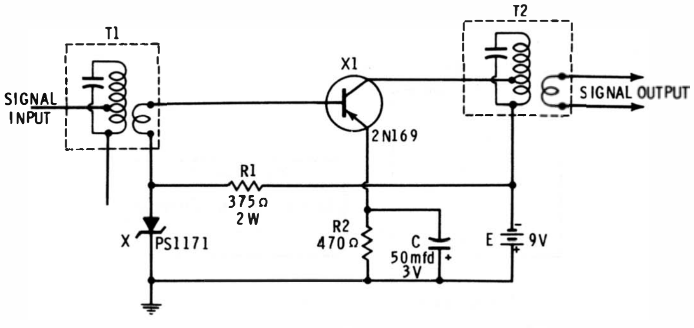

Fig. 4-9. Diode in transistor bias network.

through the diode. The zener voltage of the diode must be the same as the desired base-bias voltage. Thus, in the IF amplifier, Fig. 4-9, X is a PS1171 diode which has a zener voltage of 1.5 volts, *R* is 375 ohms 2 watts, and *E* is 9 volts. Because of its low dynamic impedance (9 ohms), the diode does not need a bypass capacitor.

The cost of the increased stability provided by this bias scheme is the relatively high current which must be supplied to the diode (5 to 20 ma, depending on diode type). But where high stability is imperative, this is a simple, inexpensive method.

RELAY RECTIFIER

To eliminate the nuisance of batteries in some installations, it sometimes is desired to operate a sensitive DC relay from the AC power line. Fig. 4-10 shows a miniature power supply for this purpose.

The 6.3-volt output of a small filament transformer (T) is rectified by a 1N281 high-conductance germanium diode (X) and filtered by C1, C2, R1 and R2. Switch S2 represents the contacting device normally used to operate the relay.

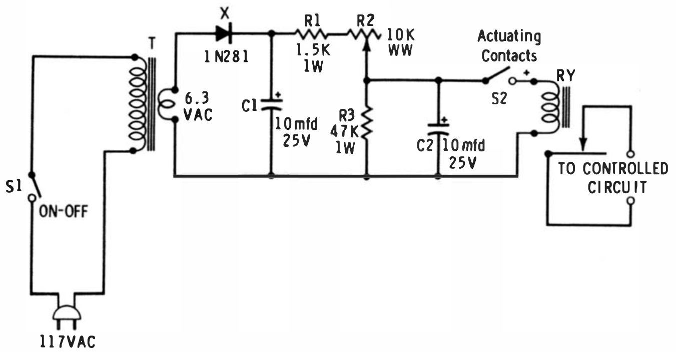

Fig. 4-10. Relay rectifier.

Rheostat R2 is set to the point at which the relay picks up firmly when S2 is closed. For maximum response speed, no capacitor is permanently connected across the relay coil. The relay may be any one of the available sensitive DC types in the range 100 microamperes to 2 milliamperes and having coil resistance between 100 and 5,000 ohms (Table 5-2, Chapter 5). For lower relay currents, select a higher maximum resistance for R2.

CHAPTER 5

CONTROL CIRCUITS

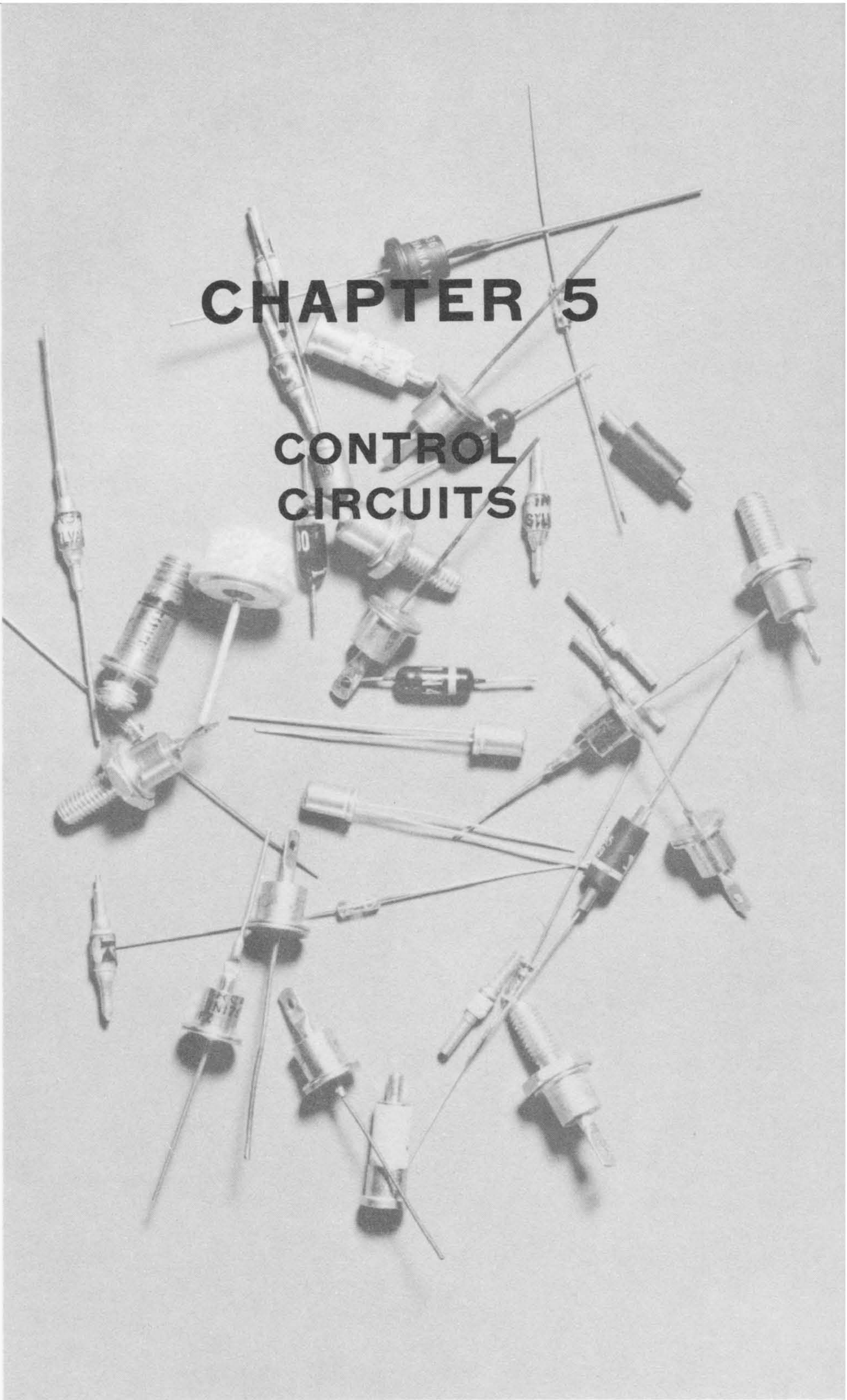

Control Circuits

The ability of the diode to rectify, switch, demodulate, or provide nonlinear resistance makes this device suitable for use in many control circuits where more complicated devices would otherwise be needed for comparable operation. Such application include the operation of a DC relay from AC or RF, separation and routing of DC control signals, and switching DC control signals.

This chapter describes several practical control applications of diodes which are indicative of the scope, but they by no means exhaust the applications possibilities. Diodes may be found in industrial and amateur electronic circuits where it is necessary to change AC to DC, hold back a DC signal, limit signal amplitude, or alter the shape of a response curve.

AF-RF RELAY

Fig. 5-1 shows a simple circuit for adapting a sensitive DC relay to operation at AF or RF up to 200 megacycles. Two 1N56A high-conductance germanium diodes (X1 and X2) are employed in a half-wave rectifier circuit. Table 5-1 gives the input AF or RF voltage (rms) required to close various commercial relays in this circuit.

Capacitor C1 (1,000 mmf) is not needed unless the signal source has a DC voltage in its output; when such a voltage is present, the diodes must be protected from it by means of the blocking capacitor. At audio frequencies of 1,000 cps and lower, it may be necessary to connect a capacitor (0.1 mfd or higher) in parallel with the relay coil to prevent chatter.

Table 5-1. AF-RF Relay Operating Data

Relay	*Closing Current*	*Coil Resistance (ohms)*	*AF or RF Voltage (rms volts)*
Barber-Colman 7310-100	110 μa	3,550	1.1
Barber-Colman 7303-100	0.54 ma	140	0.54
Sigma 5F-5000-S/SIL	1 ma	5,000	5.8
Lafayette F-260	1.2 ma	5,000	7.0
Lafayette F-482	2 ma	100	1.0
Sigma 4F-8000-S/SIL	2 ma	5,000	11.0

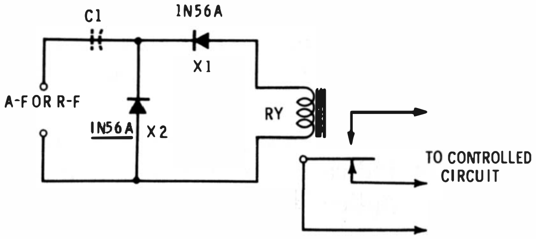

Fig. 5-1. AF-RF relay.

TUNED RF RELAY

A simple tuned circuit will enable the diode rectifier-type relay to be operated from a transmitted radio signal. Fig. 5-2 shows the circuit.

Tuned circuit L and C values must be chosen for resonance at the desired signal carrier frequency. If *C* is a 365-mmf variable capacitor, plug-in coils may be used to cover the spectrum between the low end of the standard broadcast band and 50 mc. Suitable components for the 27.255-mc citizens' control frequency are:

C = 100 mmf midget variable,
L = 9 turns of No. 18 enamelled wire
closewound on a ½-inch-diameter form.

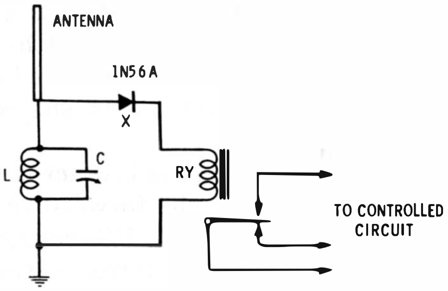

Fig. 5-2. Tuned RF relay.

With this combination, 27.255-mc response is obtained at about half-maximum setting of the tuning capacitor.

The pickup antenna may be any available whip, rod, or flat-top which will operate at the signal frequency. A good ground is essential for maximum sensitivity.

Best sensitivity will be obtained with a low-current, low-voltage relay, such as the 110-microampere, 3,550-ohm unit listed in Table 5-1. Where field strength is high, one of the less sensitive relays may be used.

POLARITY-SENSITIVE DC RELAY

The circuit given in Fig. 5-3 provides a DC relay which will operate only when the applied control voltage has the proper polarity. In this arrangement a 1N456 silicon-junction diode has been forward-connected in series with sensitive DC relay RY. The diode acts as a polarity-sensitive switch. When a positive voltage of the proper value is applied to the top input terminal, forward current flows readily through the diode and picks up the relay. But when the polarity of the control voltage is reversed, the diode becomes reverse-biased and can pass

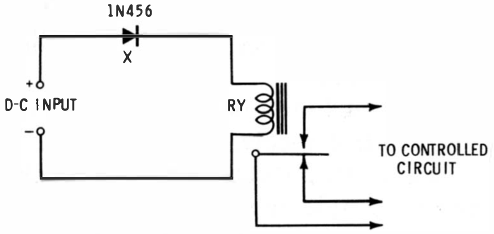

Fig. 5-3. Polarity-sensitive DC relay.

only a few thousandths of a microampere—to all practical intents and purposes representing an open switch—and the relay remains dropped out. This circuit has been used as an alarm in systems in which monitored voltage is subject to polarity shifts.

A portion of the control voltage is lost across the diode, because of the voltage drop due to the forward resistance of the diode. Table 5-2 shows the actual DC voltage required to operate sensitive relays of several types in this circuit. The same principle may be utilized with a higher-current (low-sensitivity) relay by using a small rectifier in place of the diode.

Table 5-2. Polarity-Sensitive Relay Operating Data

Relay	*Closing Current*	*Coil Resistance (ohms)*	*DC Voltage*
Barber-Colman 7310-100	110 μa	3,550	0.97
Barber-Colman 7303-100	0.54 ma	140	0.35
Sigma 5F-5000-S/SIL	1 ma	5,000	5.2
Lafayette F-260	1.2 ma	5,000	6.2
Lafayette F-482	2 ma	100	0.64
Sigma 4F-8000-S/SIL	2 ma	5,000	10.3

WIRED-RADIO RECEIVER

Wired-radio (carrier-current) systems provide an excellent means for remote control of electrical equipment of all kinds. The RF control signal is transmitted over the power line to the receiver so that under proper operating conditions there is no radiation into space with attendant interference, and no special wires need be run.

If only a short or medium distance is to be covered, a sensitive wired-radio control receiver may be built without tubes, transistors, or other amplifying components. Fig. 5-4 shows a receiver circuit employing two 1N633 high-conductance germanium diodes in a full-wave rectifier-detector. The circuit

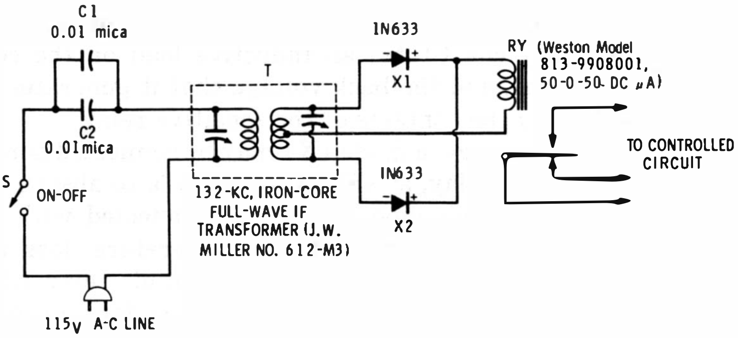

Fig. 5-4. Wired-radio relay.

responds to a 132-kc CW signal and operates a 50-microampere, 1,000-ohm DC relay (RY).

The tuner (T) is a 132-kc, iron-core, IF transformer that is pretuned to resonance with the control signal. The primary winding of this transformer is connected to the AC power line through a 0.02-mfd 500-volt mica blocking capacitor (two 0.01-mfd units, C1 and C2, connected in parallel). This capacitor prevents short circuit of the line by the transformer but affords relatively easy passage of the control signal, since the reactance of C1 and C2 at 60 cps is 0.133 megohm but only 60 ohms at 132 kc.

To pretune the receiver to the 132-kc signal on the power line, close switch S and adjust the trimmers of transformer T to the point at which the relay closes. Interrupt the signal at the transmitter and note that the relay opens. The receiver will require no subsequent tuning unless the control-signal frequency is changed.

RELAY CONTACT PROTECTOR

A great many control circuits use two relays—a sensitive one which responds to the signal and then closes a more rugged

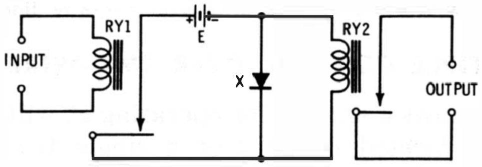

Fig. 5-5. Relay contact protector.

one which, in turn, actuates the controlled equipment. The coil of the second relay constitutes an inductive load on the contacts of the first one, and the back voltage that it generates on turn-off can destroy the contacts of the sensitive relay.

To prevent this damage, a diode (X) may be connected across the coil of the second relay, as shown in Fig. 5-5, to absorb the dangerous transient. This diode is reverse-connected with respect to the local power supply (E) and therefore does not pass appreciable current, nor does it short-circuit relay RY2. When the contacts of RY1 open, however, the collapsing magnetic field induces a transient voltage across the coil of RY2, and the polarity of this high voltage is such that the anode of the diode now is positively biased. Consequently, the diode exhibits low forward resistance which absorbs the transient and protects the contacts of RY1.

Small selenium diodes are available for this application under the name *contact protector diode*; they are offered in a wide variety of ratings, including relay coil currents up to 2 amp and coil voltages up to 154 volts. For AC operation, two diodes may be connected back-to-back (single units of this double-anode construction also are available).

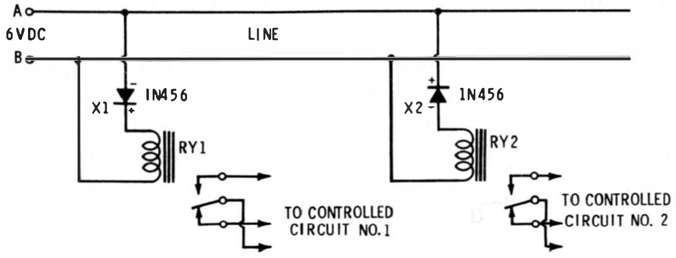

(A) Circuit.

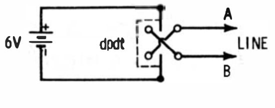

(B) Signal source.

Fig. 5-6. Multiple control over two-wire line.

MULTIPLE CONTROL OVER TWO-WIRE LINE

Fig. 5-6A shows a scheme for operating at will either one of two remotely located relays over a single two-wire line. A 6-volt DC control signal is used.

In series with each 1-ma, 5,000-ohm relay (RY1, RY2 = Sigma 5F-5000-S/SIL) is connected a 1N456 silicon junction diode (X1, X2). When the polarity of the control signal is such that line A is positive, X1 passes forward current which picks up relay RY1. At this time, however, X2 is reverse-biased and effectively opens the circuit through relay RY2. When the control-signal polarity is reversed, line A becomes negative, X1 is reverse-biased and relay RY1 drops out, and X2 passes forward current which picks up relay RY2.

Thus, a simple DPDT reversing switch (Fig. 5-6B) at the control point will permit individual control of the relays.

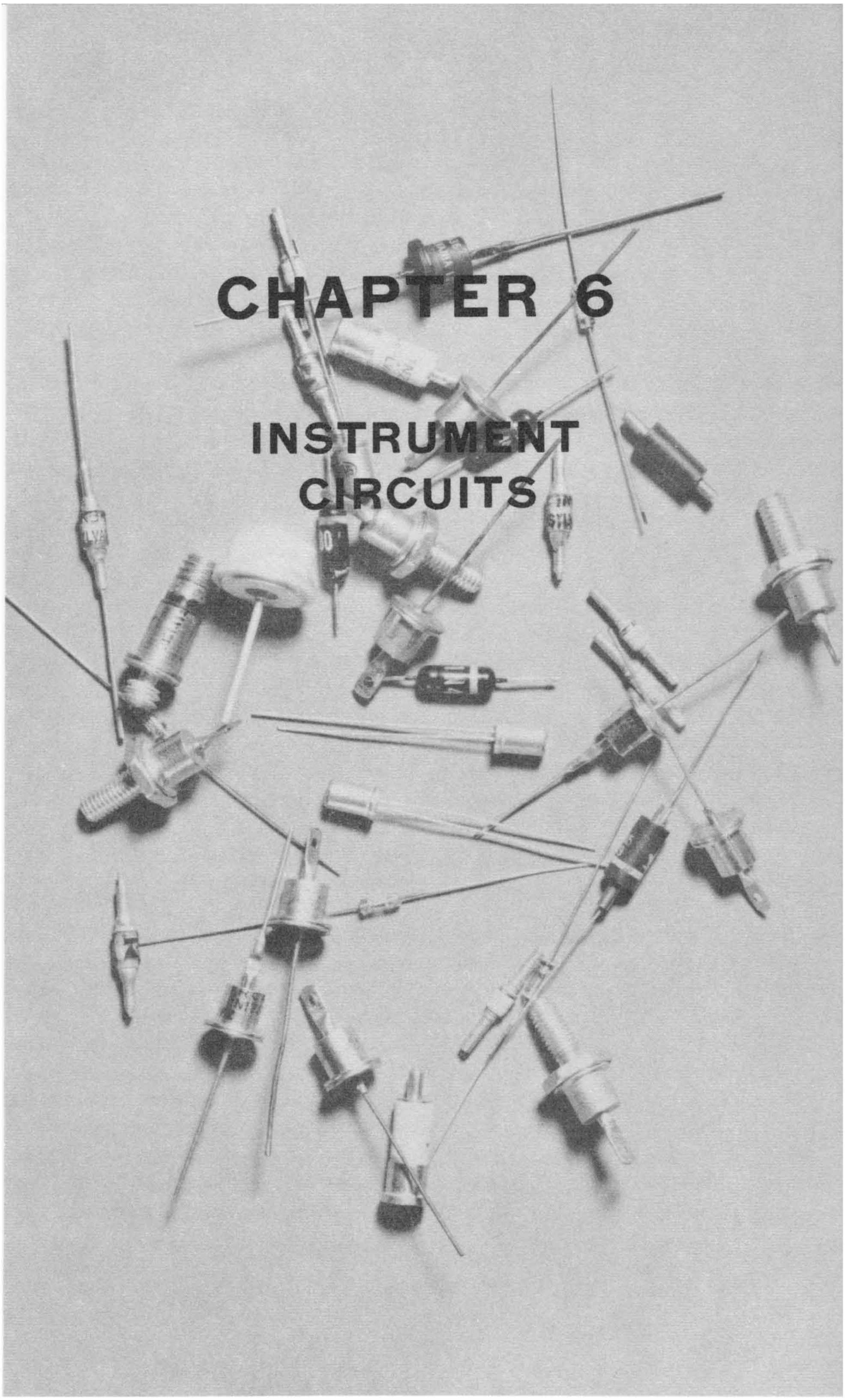

CHAPTER 6

INSTRUMENT CIRCUITS

Instrument Circuits

Long before World War I, the early crystal detector was first used with a sensitive DC galvanometer to measure the strength of radio signals; later, the crystal and meter combination was widely used as a resonance indicator in absorption wavemeters. Thus did the semiconductor enter electronic instrumentation. During the 1920's, after invention of the copper oxide rectifier, the same scheme was used for the first time to measure low-frequency voltage—with a miniature rectifier driving a DC milliammeter.

The stable, wide-range diodes available after World War II greatly extended the development of test instruments needing no local power. In recent years, further extensions have been afforded by the tunnel diode, varactor, and biased diode which require a small amount of local power.

Whereas the diode long was important in instrumentation only as a meter rectifier, and still is so used to advantage, its properties as a valve, switch, modulator, demodulator, limiter, capacitor, and nonlinear resistor suit it to many other applications in electronic instruments. The instrument applications reported only since 1950 comprise a substantial literature. All types of diodes have been used and are being constantly investigated.

SENSITIVE DIODE METERS

The copper oxide rectifier has a long record of service as a meter rectifier, but responds relatively poorly to high frequencies. The response of a good, miniature, copper oxide meter rectifier at 10 kc, for example, has been observed to drop 10%; and at 100 kc, 30% with respect to its response at 100 cps. This limits a meter employing this type of diode to the AF spectrum. The miniature selenium diode likewise is restricted to AF meters. Germanium and silicon point-contact diodes, on the other hand, operate over a wide frequency range extending to 200 mc for germanium and to several thousand mc for silicon, and so adapt a DC meter for response at radio, as well as audio, frequencies.

A rectifier-type meter may be equipped with multiplier resistors for measurements of voltage in several ranges, or with shunt resistors for measurement of current. However, the basic instrument itself, consisting of meter and diode(s), is useful as a sensitive voltmeter, milliammeter, or microammeter. Because of its simplicity and power-free operation, a diode meter of this type often is included in other test equipment, such as signal generators, bridges, and RF meters, for monitoring a signal.

(A) Circuit. *(B) 0-1 DC milliammeter.*

(C) 0-100 DC microammeter. *(D) 0-50 DC microammeter.*

Fig. 6-1. Series-diode meter.

Figs. 6-1 to 6-9 show diode meter circuits and their performance. In each instance where practicable, data are given for the three current meters most apt to be used by equipment builders and experimenters: 0-1 DC milliammeter (internal resistance 55 ohms), 0-100 DC microammeter (internal resistance 825 ohms), and 0-50 DC microammeter (internal resistance 2,000 ohms).

These circuits are described separately in this chapter in the section on voltmeters, or in the section on current meters. The semiconductor used in each circuit is the 1N34A general purpose germanium diode; however, point-contact silicon diodes also are usable. Each circuit should be calibrated individually since diodes vary in response; the performance curves given in the illustrations are derived from measurements made with a typical 1N34A.

In each circuit, a calibration control rheostat may be connected in series with the DC meter (M) for standardization at full-scale deflection.

The 0.01-mfd capacitor (C in Figs. 6-2 and 6-3) is a good compromise value for AF and RF operation.

SENSITIVE DIODE VOLTMETERS

Series-diode type—This is the simplest possible voltmeter, consisting of a diode and DC meter in series (Fig. 6-1A). Here, the diode functions as a simple half-wave rectifier, passing to the meter only positive half-cycles of the input voltage (if the diode and meter are reversed, the circuit will respond instead to negative half-cycles).

Response with a 0-1 DC milliammeter is given in Fig. 6-1B, with a 0-100 DC microammeter in Fig. 6-1C, and with a 0-50 DC microammeter in Fig. 6-1D.

This circuit suffers from the necessity that the DC return path for the diode and meter must be completed by the circuit supplying the voltage. The meter reading therefore is affected inversely by the external resistance (measurements for the curves in Fig. 6-1 were made with an AC generator having an output resistance of 50 ohms). When this resistance is constant, however, as it often is in instruments in which the voltmeter is installed, this imposes no difficulty. A second hazard, which is not so easily ignored, is the fact that DC from the circuit under test may damage the diode and meter.

At frequencies under 60 cps, it may be necessary to connect a large capacitance in parallel with meter M to prevent vibration of the pointer.

Two-diode half-wave type—The addition of a second diode, X1 (Fig. 6-2A), allows the use of a DC-blocking capacitor (C), thus overcoming one of the shortcomings of the circuit shown in Fig. 6-1A. This second circuit also is a half-wave arrangement, diode X2 rectifying the positive half-cycle of input voltage. Diode X1 is reverse-connected for the positive half-cycle and so appears as a high resistance. When the input polarity reverses, X2 then is reverse-biased while X1 is forward-biased by the negative half-cycle. X1 accordingly conducts readily, protecting X2 from the high peak inverse voltage (due to presence of capacitor C) which it otherwise would be forced to withstand.

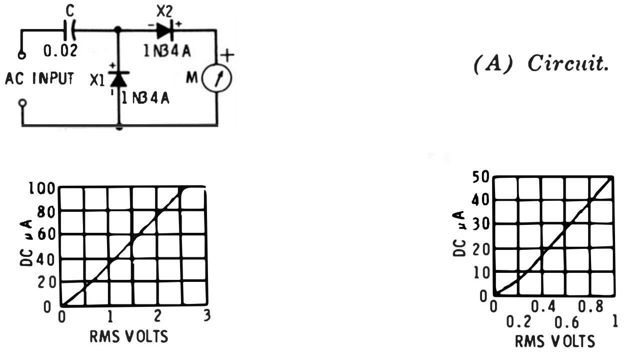

(A) Circuit.

(B) 0-100 DC microammeter. *(C) 0-50 DC microammeter.*

Fig. 6-2. Two diode half-wave meter.

The response curves given in Figs. 6-2B and 6-2C show this circuit to be more sensitive than the simple half-wave rectifier described in the preceding discussion. The 0-1 DC milliammeter is not specified here because of the higher AC input voltage

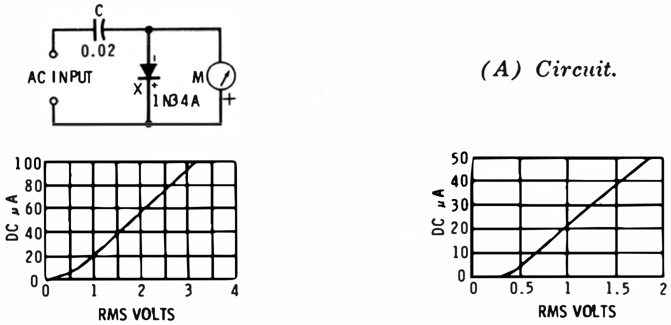

(A) Circuit.

(B) 0-100 DC microammeter. *(C) 0-50 DC microammeter.*

Fig. 6-3. Shunt diode meter.

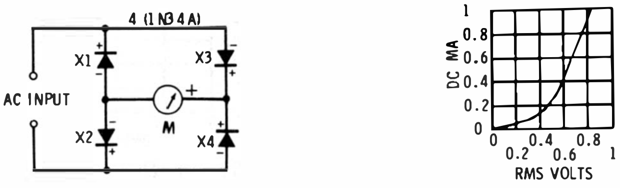

(A) Circuit. *(B) 0-1 DC milliammeter.*

(C) 0-100 DC microammeter. *(D) 0-50 DC microammeter.*

Fig. 6-4. Full-bridge meter.

required when this meter is used removes this circuit from the sensitive meter category.

Shunt-diode type—This circuit is popular because it contains a blocking capacitor, and yet requires only one diode (Fig. 6-3A). It is so termed because, unlike the circuit of Fig. 6-1A, the diode shunts the meter and input.

Figs. 6-3B and 6-3C show the response of the circuit using a 0-100 DC microammeter and 0-50 DC microammeter, respectively. The 0-1 DC milliammeter is not specified here for reasons given earlier. From the response curves, it is seen that the shunt-diode meter is less sensitive than the series-diode and two-diode types previously described.

Full-bridge type—This circuit provides full-wave rectification and may be used with a DC-blocking capacitor if necessary (Fig. 6-4A). Because it uses the energy in both half-cycles of the AC input voltage, its DC output (and accordingly the sensitivity of the circuit) is greater than with any of the previously described circuits. For highest efficiency, the four diodes should be matched.

Figs. 6-4B, C, and D show the response with each of the three DC meters: 0-1 milliammeter, 0-100 microammeter, and 0-50 microammeter.

An added merit of this circuit is the fact that the ripple component in the DC meter current is twice the AC input

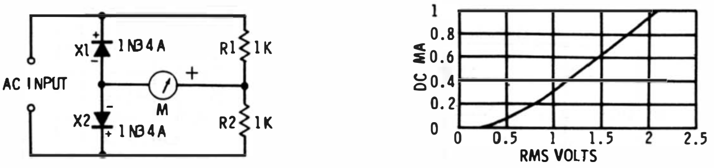

(A) Circuit. *(B) 0-1 DC milliammeter.*

(C) 0-100 DC microammeter. *(D) 0-50 DC microammeter.*

Fig. 6-S. Half-bridge meter.

frequency. This often eliminates the need to bypass meter M at low audio frequencies.

Half-bridge type—Where economy is imperative although full-wave rectification is demanded, two of the diodes of the bridge rectifier may be replaced with resistors. This gives the half-bridge circuit shown in Fig. 6-5A.

As the curves in Figs. 6-5B, C, and D show, the half-bridge is less sensitive than the full bridge with either of the DC meters.

The half-bridge circuit, like the full bridge, may be used with a DC-blocking capacitor when necessary.

SENSITIVE DIODE CURRENT METERS

The meters shown in Figs. 6-2A, 6-3A, 6-4A, and 6-5A may be used as AF-RF current meters, as well as voltmeters. For

SEE FIGURE 6-2 FOR CIRCUIT

(A) 0-100 DC microammeter. *(B) 0-50 DC microammeter.*

Fig. 6-6. Current-meter performance (Two-diode half-wave circuit).

SEE FIGURE 6-3 FOR CIRCUIT

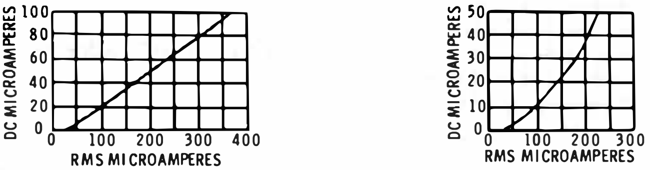

(A) 0-100 DC microammeter. *(B) 0-50 DC microammeter.*

Fig. 6-7. Current-meter performance (Shunt-diode circuit).

current measurements, however, the two circuits with blocking capacitors (Figs. 6-2A and 6-3A) may be used only in setups where insertion of the capacitor is permissible.

Figs. 6-6, 6-7, 6-8, and 6-9 show performance of these circuits with the same DC meters previously specified.

SQUARE-LAW AC METER

The full-bridge circuit (Fig. 6-4A) with a 0-50 DC microammeter may be used as a square-law AF-RF voltmeter. The response curve (Fig. 6-4D) shows the circuit action to be approximately square-law (doubling the input voltage quadruples the output current) over much of its slope.

Close square-law response may be obtained by picking matched diodes for the bridge. Often a carefully picked single

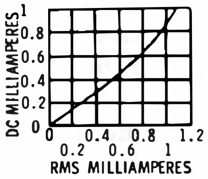

(A) 0-1 DC milliammeter.

SEE FIGURE 6-4 FOR CIRCUIT

(B) 0-100 DC microammeter. *(C) 0-50 DC microammeter.*

Fig. 6-8. Current-meter performance (Full-bridge circuit).

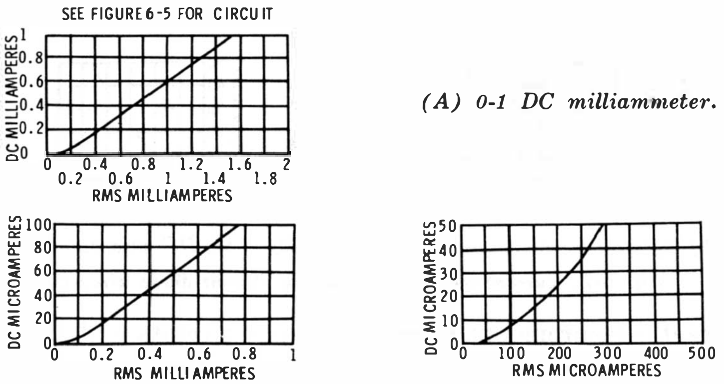

(A) 0-1 DC milliammeter.

(B) 0-100 DC microammeter.

(C) 0-50 DC microammeter.

Fig. 6-9. Current-meter performance (Half-bridge circuit).

diode will give square-law response in the series-diode circuit (Fig. 6-1A) with the 0-100 DC microammeter.

SQUARE-LAW DC METER

Fig. 6-10A shows the circuit of a square-law DC meter. This circuit utilizes the nonlinear forward conduction of a single 1N34A general-purpose germanium diode.

The response curve (Fig. 6-10B) shows operation to be exactly square-law at DC input voltages between 0.1 and 0.2 volt. Resistance of the DC source should not exceed 100 ohms. Careful picking of a diode from an ample supply will insure close square-law response.

This circuit may be employed also as a square-law detector or squaring circuit for computers by substituting a 2,000-ohm resistor for the microammeter. Output-voltage changes measured across this resistor then will be proportional to the square of input-voltage changes.

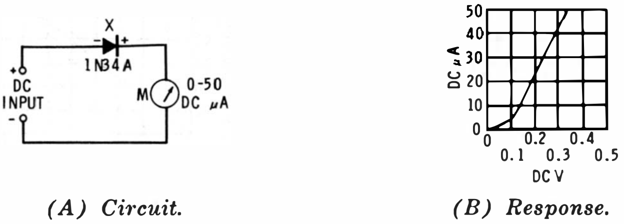

(A) Circuit.

(B) Response.

Fig. 6-10. Square-law DC meter.

QUASI-LOGARITHMIC DC VOLTMETER

The scale of a logarithmic voltmeter is spread out in its lower section and compressed in its upper section. The result is that two or more decades of voltage may be read on the single scale with the same accuracy and convenience which would require two voltage ranges on a regular linear voltmeter. This saves the labor of range switching.

Logarithmic voltmeters, both AC and DC, usually employ complex multistage tube or transistor circuits. But quasi-logarithmic action may be obtained with a biased diode. The circuit (Fig. 6-11A) is essentially a diode limiter biased at +1 volt DC and a high-resistance DC voltmeter for reading the limiter output. The voltmeter section is composed of a 0-50 DC microammeter (M) and 50K multiplier resistor (R3). The bias is set to exactly 1 volt by adjustment of rheostat R2. Because of the extremely high reverse resistance of the 1N300 silicon junction diode (several thousand megohms), the bias cannot deflect the microammeter.

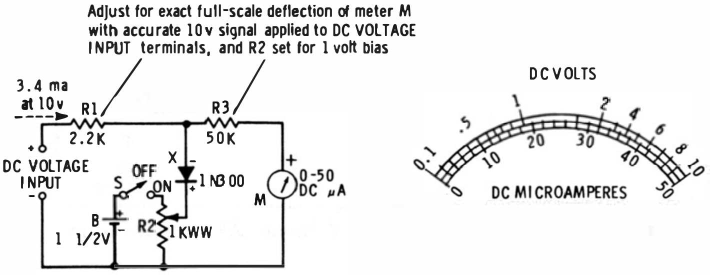
Adjust for exact full-scale deflection of meter M with accurate 10v signal applied to DC VOLTAGE INPUT terminals, and R2 set for 1 volt bias

(A) Circuit. *(B) Meter scale.*

Fig. 6-11. Quasi-logarithmic DC voltmeter.

Up to 1 volt DC input, the diode cannot pass current, because of its positive bias. Response of the circuit (Fig. 6-11B) therefore is closely linear up to 1 volt. Beyond 1 volt, however, the diode passes forward current and compresses the upper half of the meter scale. This action affords a scale on which may be clearly read 0.1-1-10 volts. A second, 10-100-1,000 volt range, may be obtained by means of a suitable voltage divider connected ahead of the circuit. High input resistance may be obtained with a transistor- or tube-type DC amplifier ahead of the circuit.

TRANSFORMER-COUPLED LINEAR AF MILLIAMMETER

Fig. 6-12 shows the circuit of a transformer-coupled AF milliammeter. A special feature of this instrument is its low insertion loss; the impedance of the primary winding of transformer T is so low that insertion of the instrument into a test circuit introduces very little voltage drop. Current ranges are 0-3, 0-10, 0-30, and 0-100 ma rms. The indicating instrument is a 0-50 DC microammeter (M), and response of the circuit is linear.

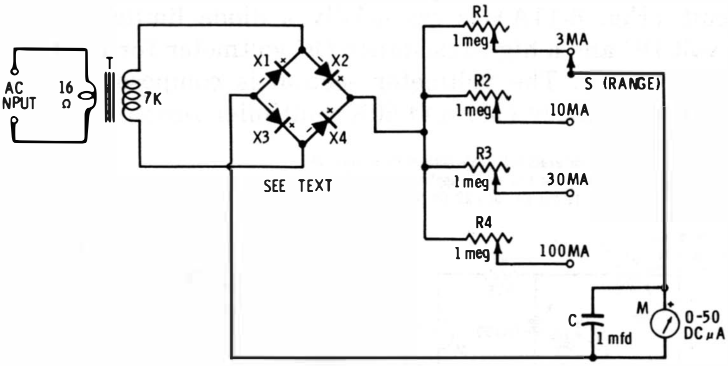

Fig. 6-12. Transformer-coupled linear AF milliammeter.

Rectification is provided by a full bridge (X1 to X4). The diodes in this bridge may be four general-purpose germanium diodes, such as Type 1N34A, or a miniature bridge-type copper oxide meter rectifier (such as Conant B-160) may be used in place of the four separate diodes. The circuit was tested with both. Transformer T is a midget universal audio output unit with connections to the 16-ohm primary and 7,000-ohm secondary taps.

Calibration rheostats R1 to R4 are miniature 1-megohm units. Only the full-scale deflection in each current range need be calibrated, since the response is linear.

1. Set RANGE switch S to its 3 ma position.
2. Feed an accurate 3 ma rms current into the AC INPUT terminals.
3. Adjust R1 for exact full-scale deflection of meter M.
4. Repeat this procedure, setting S successively to its 10,

30, and 100 ma positions, applying input current of 10, 30, and 100 ma, respectively, and adjusting rheostats R2, R3, and R4, respectively.

Frequency response of the instrument depends upon the characteristics of transformer T; the better the grade of the transformer, the wider the frequency response.

ZENER DIODE METER PROTECTOR

The sharp "breakdown" of a zener diode from its previous high-resistance state may be utilized to protect a DC meter from burnout. Fig. 6-13 shows the circuit of a 50-volt, 20,000 ohms-per-volt voltmeter protected by a 1N714 10-volt zener diode (X).

Fig. 6-13. Zener diode meter protector.

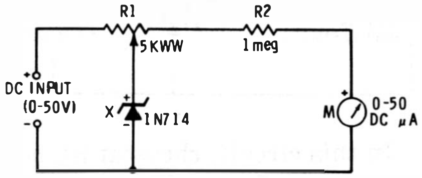

Here, the indicating meter (M) is a 0-50 DC microammeter, the scale of which reads 0-50 volts without mental addition of ciphers. R2 is the principal voltmeter multiplier resistor. Potentiometer R1 is set so that, with 51 volts applied to the DC INPUT terminals, the diode begins to conduct in its zener region. After this adjustment, the diode acts as an extremely high resistance as long as the input voltage is between zero and 50 volts; no voltage drop due to diode current is produced across R1, and the meter accuracy is not affected. As soon as the input exceeds 50 volts, however, the diode conducts and the resulting voltage drop across R1 prevents overswing of the meter.

This is a fast-acting system which will protect any sensitive meter in a similar circuit.

ZENER DIODE VOLTAGE STANDARDS

The regulating characteristic of a zener diode biased to its breakdown region may be used as a source of accurate voltage.

A single diode operated from a battery or well-filtered DC power supply will deliver a standard DC voltage, and a double-anode diode (or two single-anode units connected back-to-back) operated from the low-voltage secondary of a transformer will provide a standard, squared AC voltage. These applications are described in Chapter 4.

Additionally, a DC voltage standard having exceptional stability is shown in Fig. 6-14. This circuit combines the long-term voltage stability of the mercury battery and the regulating property of the 651C5 zener diode. It is much less expensive than a standard cell, in lieu of which it may be used in the low-budget laboratory.

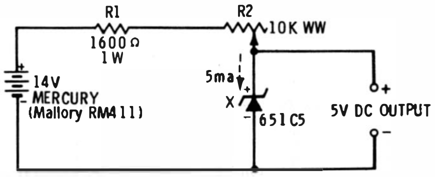

Fig. 6-14. Zener diode voltage standard.

In this circuit, rheostat R2 is set for a diode current slightly in excess of 5 ma. (This current level may be checked by reading the voltage drop across R1 with a DC VTVM. The deflection should be 8 volts.) R1 is a current-limiting resistor which protects diode X from current overload when R2 is set to its extreme low-resistance point. A standard voltage output of 5 volts is provided by this circuit.

RF PROBE

Fig. 6-15 shows the circuit of an RF probe for DC VT voltmeters. The small size of the 1N55AS miniature germanium diode (X), 0.02-mfd ceramic capacitor C, and 1-megohm ½-watt resistor R permits enclosure of these components in a slender test-probe shell.

DC output voltage of the circuit is equal to the peak value of the RF input voltage (that is, $E_{dc} = 1.414\ E_{rms}$) and it is this value that is indicated directly by the DC scales of the VTVM. Most DC VTVMs have an input resistance of 11 megohms, 1 megohm of which is in the DC probe. Resistor R takes the place of this probe resistor. It also serves as an isolation

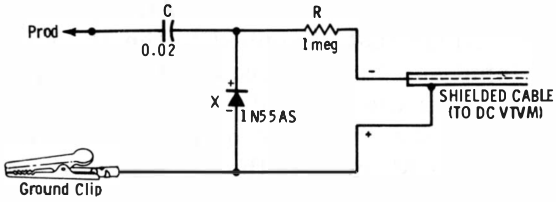

Fig. 6-15. RF probe.

resistor. If R is made 4.14 megohms (one 3.9-megohm and one 0.24-megohm resistor in series), the voltage division with the 10 megohms contained in the VTVM will cause the meter to read rms volts instead of peak volts, if this is desired. With the 1N55AS, the probe will handle up to 50 volts rms.

With the diode polarized as shown, the circuit responds to the positive peak of the RF signal. For negative-peak measurements, reverse the diode and the DC input to the VTVM.

PEAK-TO-PEAK PROBE

Fig. 6-16 is the circuit of a voltage doubler-type probe which will adapt a DC VTVM for measurement of peak-to-peak AC voltages. This is essentially two 1N55AS shunt-diode rectifier circuits (of the type previously shown in Fig. 6-15) connected in parallel. X1 rectifies the positive peak of the AC input, and X2 the negative peak.

The DC voltage across each load resistor is equal to the peak value of the corresponding half-cycle of AC input voltage; the positive peak voltage across R2 and the negative peak voltage across R3. Since R2 and R3 are in series and their voltages are of opposite polarity, the voltage at their outside ends is the sum of these two separate voltages, and thus is

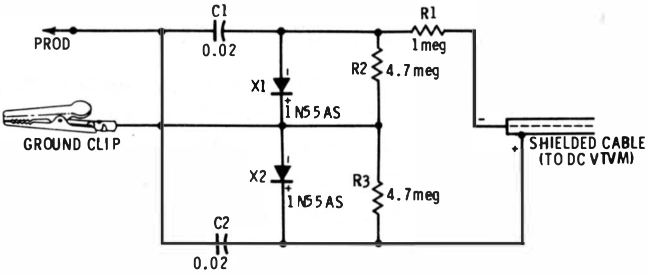

Fig. 6-16. Peak-to-peak probe.

equal to the peak-to-peak value of the AC input voltage. It is this total DC voltage that is applied to the DC VTVM. Maximum signal input should not exceed 100 volts peak-to-peak.

Resistor R1 takes the place of the 1-megohm isolating resistor which is in the DC probe of the VTVM. Omission of this resistance would impair the accuracy of the voltage readings.

DEMODULATOR PROBE

In order to examine the envelope waveform of an AM signal with an oscilloscope, the signal first must be demodulated. After the complex TV video wave is demodulated, for example, the video modulation and sync pulses are visible.

Fig. 6-17 is the circuit of a low-capacitance demodulator probe for operating into the vertical channel of an oscilloscope.

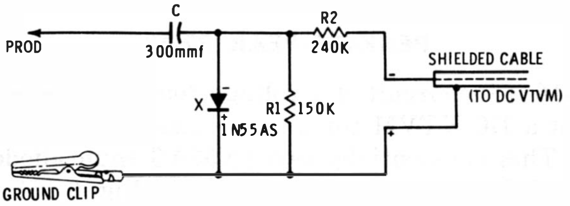

Fig. 6-17. Demodulator probe.

This is a shunt detector with a DC-blocking capacitor (C). The 1N55AS is a miniature 150-volt germanium diode. This voltage rating allows safe handling of 50 volts peak signal amplitude.

The input impedance of the probe is high enough that use of this accessory will not upset operation of most TV circuits.

FIELD STRENGTH METER

A tunable diode detector with indicating meter makes a simple field strength meter and absorption wavemeter. The tuning dial may be calibrated with an RF signal generator.

Fig. 6-18 shows the circuit of an instrument of this type. The tuner consists of coil L and 365-mmf variable capacitor C1. (If wide-band operation is desired, a series of plug-in coils may be used to cover the frequency range. Table 6-1 gives

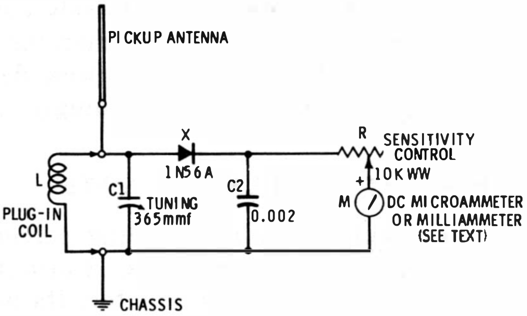

Fig. 6-18. Field-strength meter.

plug-in coil data.) The manufactured coils specified in Table 6-1 cover the tuning range 260 kc to 100 mc in five bands. These are miniature, ceramic, slug-tuned coils which may be set exactly to frequency during the calibration of the instrument. For plug-in purposes, these coils may be mounted inside 1″-diameter 4-prong coil forms, such as Millen Type 45004. For narrower-band tuning than is afforded by this coil assortment (example: amateur or citizens' bands), a lower capacitance (for example, 50 or 100 mmf) should be used for C1.

The signal rectifier is a high-conductance 1N56A germanium diode (X). DC output of this diode drives current meter M. The meter may be a 0-1 DC milliammeter or a 0-50 or 0-100 DC microammeter. The microammeters provide highest sensitivity. The sensitivity control rheostat (R) allows reduction of the DC to the full-scale deflection of the meter on strong RF signals. The pickup antenna may be any convenient vertical wire, rod, or whip.

Table 6-1. Field Strength Meter Coil Data

Coil	*Inductance (μH)*	*Frequency Range (mc)*	*Coil Type**
A	1000	0.26 - 1	40A000CB1
B	110	0.8 - 3	40A104CB1
C	16	2 - 8	40A155CB1
D	1.3	7 - 28	40A156CB1
E	0.1	26 - 100	40A107CB1

* Catalogue Numbers of J. W. Miller Co.

The instrument may be calibrated by loosely coupling coil L to an RF signal generator, tuning-in generator signals at selected frequencies by adjusting C1 for peak deflection of meter M, and graduating the C1 dial accordingly.

PERCENT MODULATION METER

Fig. 6-19 is the circuit of a direct-reading percent modulation meter for checking AM transmitters. It also serves as a carrier shift meter and aural phone monitor. Its use of separate carrier and modulation meters eliminates the error and accidents caused when a single meter is shifted between these two functions.

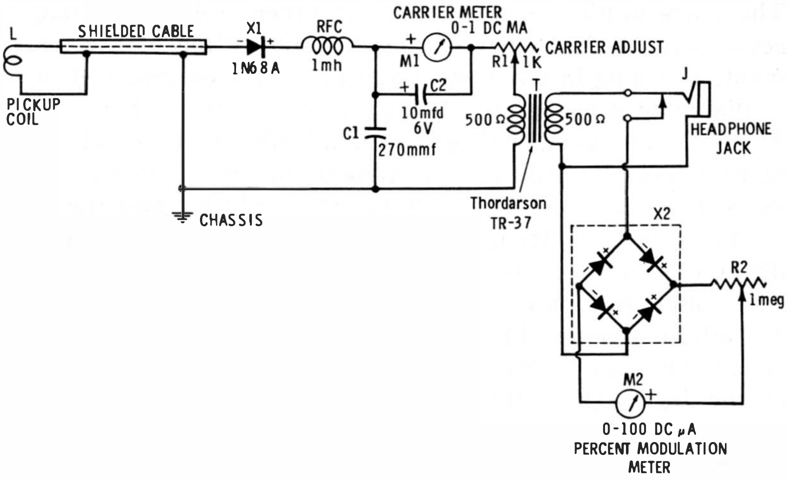

Fig. 6-19. Modulation meter.

The AM signal is picked up with a small coupling coil, L (2 or 3 turns of insulated hookup wire 2″ in diameter), placed near the transmitter tank. This signal is demodulated by the 1N68A germanium diode (X1). The diode output contains a DC component which is proportional to the average carrier voltage and is indicated by milliammeter M1. The diode output also contains an AF component which is proportional to the modulation percentage, and which is indicated, after rectification by the transformer-coupled B-160 copper oxide bridge (X), by microammeter M2.

The instrument is set by adjusting rheostat R1 so that M1 reads exactly 1 ma when the circuit is excited by the transmitter. The deflection of this meter does not change during modulation unless carrier shift is present in the signal. Next, with the transmitter modulated 100%, as determined by measurements with an oscilloscope, rheostat R2 is set for exact full-scale deflection of M2. This is the 100% modulation point, the 0-100 scale of M2 being read direct in percent modulation. M2 does not deflect unless the signal is modulated; the copper oxide does not respond to RF which could arrive only in small amounts through transformer T and through stray pickup. Rheostat R2 needs no readjustment except during subsequent periodic check of calibration. R1, however, must be adjusted each time the instrument is used, to set M1 to full scale.

Transformer T (Thordarson TR-37) has a 1:1 turns ratio. The closed-circuit jack (J) is provided for headphones for aural monitoring of the signal. Either magnetic or crystal headphones may be used.

SWR METER

Fig. 6-20 shows the circuit of a conventional, bridge-type instrument for checking standing wave ratio of antennas, transmission lines, and RF components at frequencies up to approximately 100 mc. Here, the RF bridge circuit consists of R4 and R5 in one leg, and R3 and the external device connected to coaxial jack J2 in the other leg. The RF signal is

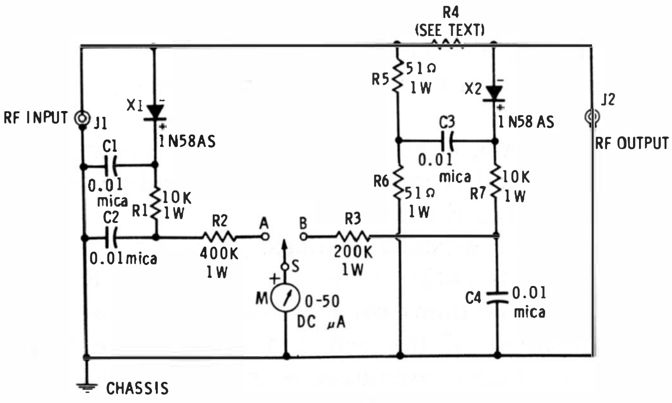

Fig. 6-20. SWR meter.

fed into the circuit via coaxial jack J1. Meter M reads this input signal when switch S is thrown to its position A, and the bridge output signal when S is thrown to B.

All resistors must be 1-watt, 1%, noninductive units. The resistance of R4 must equal exactly the impedance of the transmission line, antenna, or component connected to jack J2 for test, otherwise the bridge will not null. Common impedance values met in practice are 52, 75, 300, and 600 ohms. When R4, R5, and R6 have the exact specified values, the bridge will null at the selected "J2 impedance." That is, meter M will read zero when S is at position B and the bridge is excited by RF input. The layout of the instrument must be carefully planned to minimize stray capacitance, inductance, and coupling, and fully shielded to prevent RF pickup from the fields always present when this type of measurement is made.

After checking the completed instrument for clean null (with the highest-frequency signal to be used injected at J1, switch S set to B, and a noninductive dummy resistor equal to R4 connected to J2) and making any adjustments to the internal resistors needed to reduce null to zero, make an SWR calibration in the following manner;

1. Apply a 2-mc signal to J1.
2. Plug dummy resistor into J2.
3. Throw switch S to position A and adjust signal amplitude for full-scale deflection of M.
4. Transfer switch S to position B; M should read zero.
5. Connect a higher-resistance dummy resistor to J2.
6. Throw switch S to position A and reset signal amplitude for full-scale deflection of M.
7. Throw switch S to position B, note deflection of M, and record as E1.
8. Repeat steps 5, 6, and 7, using dummy resistors of various values and recording the corresponding meter readings as E2, E3, E4, etc.
9. Using these resistance values, calculate the values of standing wave ratio: SWR = R1/R2 or R2/R1. Here, R1 is the normal dummy equal to R4 in the circuit, and R2 is the resistance of the test dummy. Use the fraction in which the higher resistance is in the numerator. Draw a curve plotting these SWR values against the correspond-

ing deflections of the meter, or prepare a direct-reading SWR scale for meter M.

To use the instruments;

1. Connect RF source (such as transmitter) to J1.
2. Connect load (such as transmission line) to J2.
3. Place switch S in position A and adjust RF for full-scale deflection.
4. Throw switch S to position B and read meter.
5. Determine SWR from data obtained in step 9 in the preceding procedure.

DIODE IN MICROWAVE SWR MEASUREMENTS

Whereas the instrument shown in Fig. 6-20 is adequate for SWR measurements at frequencies up to 100 mc or more, a different technique must be employed at microwave frequencies. In the latter spectrum, a slotted line is used for SWR

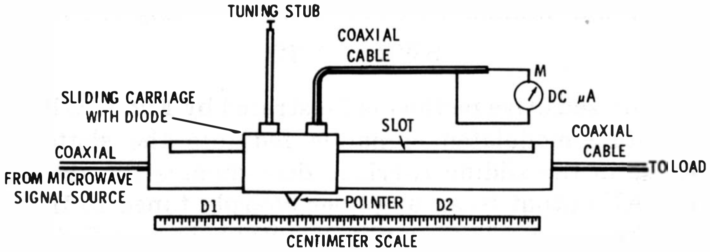

(A) CW method.

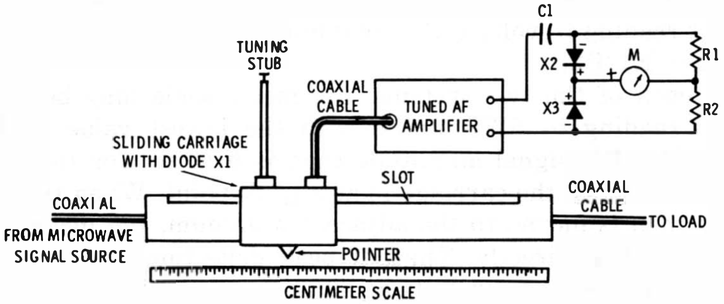

(B) AM method.

Fig. 6-21. Microwave SWR setups.

measurement. The rectifier or demodulator employed in these measurements is a silicon point-contact microwave diode which must be selected to operate at the highest test frequency.

There are two methods. Fig. 6-21A may be used with an unmodulated (CW) signal; Fig. 6-21B requires an amplitude-modulated signal. In each method, the slotted line is essentially a segment of air-dielectric coaxial line, or wave guide, in which a lengthwise slot has been cut in the outer conductor. A snug-fitting "carriage" slides over this slot and dips the metal tip of a microwave diode into the interior. This tip, acting as an antenna, samples the standing wave field within the tube, and the resulting DC output of the diode deflects DC microammeter M. A pointer attached to the carrier moves along a centimeter scale to indicate the position of the probe.

As the probe passes through a high-intensity point, M peaks in deflection (I1) and when it passes through a low-intensity point, M dips (I2). The corresponding points (D1, D2, respectively) read on the centimeter scale may be used to calculate the frequency. The standing wave ratio is calculated from the maximum and minimum current readings using the formula:

$$\text{SWR} = \text{I1}/\text{I2}$$

The more sensitive method is illustrated by Fig. 6-21B. Here, an amplitude-modulated signal is fed into the slotted line. The diode in the sliding carriage demodulates the signal, delivering AF output to an amplifier sharply tuned to the modulation frequency. The amplifier output is rectified by an audio-frequency half-bridge (X2-X3-R1-R2) and deflects microammeter or milliammeter M. Adjustments are the same as in the preceding example. Usually, however, the meter is direct-reading in volts (E1 = maximum, E2 = minimum), and SWR = E1/E2.

In each of the two systems, the meter scale may be made direct-reading in SWR units, with the lowest value at full scale. The RF signal amplitude then is first set for full-scale deflection when the carriage is at a peak point. When the carriage then is moved to the adjacent minimum, the meter will indicate SWR directly. Thus, if peak deflection is set at 100 microamperes, and dip falls at 89 μa in the method shown in Fig. 6-21A, SWR = 100/89 = 1.12. With each of the two systems, frequency may be measured in terms of the positions of

D1 and D2, measured in centimeters between adjacent peak points *or* adjacent dip points using the formula:

$$f\,(\text{in mc}) = \frac{15{,}000}{(D1\text{-}D2)}$$

RF WATTMETERS

The SWR meters just described may be used to measure RF power when the meter is inserted between the signal source and the normal load, the slotted line being terminated in its characteristic impedance. Power (P in watts) is calculated in terms of current points (in amperes) using the setup in Fig. 6-21A, or voltage points (in rms volts) using the setup in Fig. 6-21B: $P = K\sqrt{I1\text{-}I2}$ where K is a constant supplied by the manufacturer of the slotted line, or $P = (E1 \times E2)/Z$ where Z is the slotted line characteristic impedance.

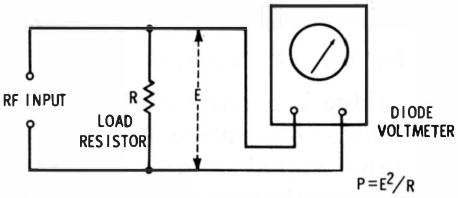

Fig. 6-22. RF wattmeter.

RF power may be measured also with a direct-reading RF wattmeter based on a diode voltmeter and load resistor. This arrangement is shown in Fig. 6-22.

The RF power is developed across noninductive load resistor R which must have a resistance equal to the output impedance of the RF source and a power rating equal to twice the expected power. RMS voltage E is developed across this resistor, and P (in watts) $= E^2/R$. From this equation, it is seen that the scale of voltmeter M may be made direct-reading in watts only for a particular value of R. This is convenient, however, in cases where power measurements are always made with a single load resistance, such as 50 or 72 ohms.

ANTENNA IMPEDANCE BRIDGE

Fig. 6-23 shows the circuit of an RF impedance bridge suitable for measuring the impedance of amateur and citizens' band antennas, transmission lines, and other components between 20 and 600 ohms at frequencies up to 50 mc. After the instrument is calibrated, the impedance in ohms may be read directly from the dial of variable capacitor C2 which is the bridge balance control. The null indicator is a diode RF voltmeter consisting of a miniature 1N55AS germanium diode (X), resistors R2 and R3, RF choke RFC, and bypass capacitor C3.

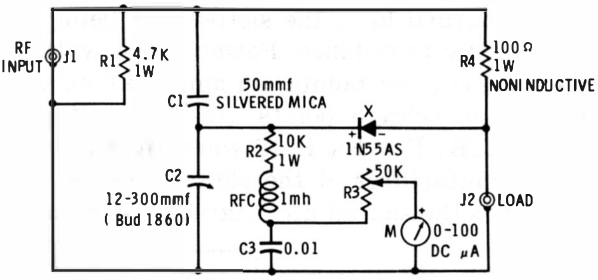

Fig. 6-23. RF impedance bridge.

One leg of the bridge is composed of C1 and C2, the other of R4 and the unknown impedance (Z) connected to coaxial jack J2. The RF input signal is injected via coaxial jack J1. At the balance (null) setting of C1, meter M reads zero, and the unknown impedance Z = (C2R4)/C1. Rheostat R3 is a variable voltmeter multiplier which acts as a sensitivity control, permitting meter M to be set for best sensitivity with a given input-signal amplitude. Since M is used only as a null indicator, the actual reading of this meter is unimportant.

The simplest way to calibrate the instrument is to adjust the bridge for null separately with as many noninductive resistors as obtainable connected successively to J2 with short leads, and to inscribe the C2 dial with these resistance values. Thus;

1. With the RF signal injected via J1, connect a 20-ohm resistor to J2.
2. Adjust C2 for null, setting R3 for maximum sensitivity as null is approached.
3. At null, mark the C2 dial *20*.
4. Repeat with other resistance values at J2, marking the C2 dial accordingly.

Use of the instrument is equally simple;

1. Inject the RF test signal via J1.
2. Connect the antenna, transmission line, or other unknown impedance to J2.
3. Adjust C2 for null, adjusting R3 for maximum sensitivity as null is approached.
4. At null, read the unknown impedance from the dial of C2.

AMPLITUDE MODULATOR

Fig. 6-24 shows a circuit for amplitude modulation of a radio-frequency carrier with an AF voltage. A modulator of this type may be built into an oscillator or signal generator or may be used externally. The circuit utilizes the ability of the diode, as a nonlinear resistance, to generate modulation products of two signals presented to it simultaneously.

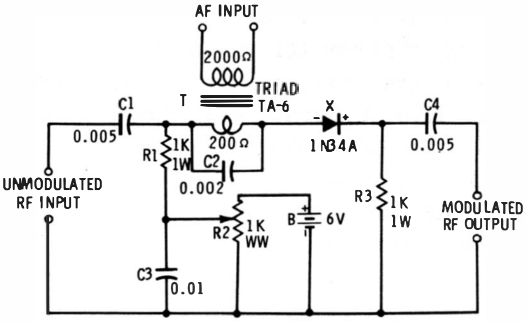

Fig. 6-24. Amplitude modulator.

The unmodulated RF is coupled into the circuit through C1 and R1 (that portion of R2 in the circuit is RF-bypassed by C3). The AF is introduced through miniature transformer T the secondary of which is RF-bypassed by C2. Modulated RF is developed across R3 and coupled to the output through C4.

The diode is forward-biased into its most favorable conduction region by means of DC from battery B and potentiometer R2. This adjustment is made by setting R2 while observing the output AM signal with an oscilloscope connected to the MODULATED RF OUTPUT terminals. Set R2 for best linearity of modulation, and the AF input amplitude for desired modulation percentage. The bias voltage may also be obtained from a well-filtered DC power supply.

AM PHONE MONITOR

Modulation quality of an AM transmitter may be aurally appraised with a simple linear diode detector. It is not necessary to tune the circuit to the carrier frequency.

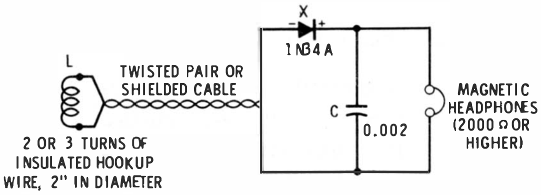

Fig. 6-25. AM phone monitor.

Fig. 6-25 shows the circuit of this type of monitor. The modulated signal is picked up by coupling coil L which is placed near the transmitter tank. Except with very-low-powered transmitters, the signal amplitude will be high enough to operate the 1N34A germanium diode (X) in its linear region, so that little distortion will be generated by the circuit.

High-resistance magnetic headphones must be used. If crystal headphones are used, connect a 2,000-ohm ½-watt resistor in parallel with them.

SQUARE-WAVE ADAPTOR

A 2-diode limiter or clipper circuit may be used to convert sine waves into clipped waves which are essentially square. Such a circuit is shown in Fig. 3-1, Chapter 3. The higher the amplitude of the sine-wave input voltage, the steeper will be the sides of the output wave.

A similar adaptor which requires no DC bias is the double-anode zener diode regulator shown in Fig. 4-3B, Chapter 4. Because of the relatively high zener current of 12 ma, this adaptor requires more driving power than the one mentioned in the preceding paragraph.

Simple adaptors of the limiter-clipper type operate satisfactorily up to 50 or 100 kc. At higher frequencies, diode

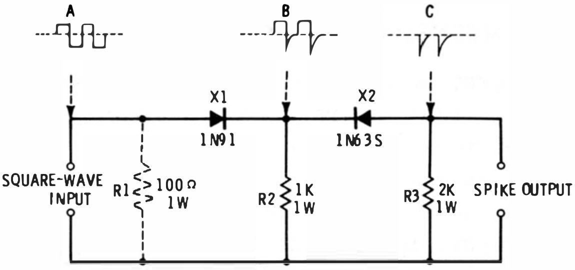

Fig. 6-26. Timing marker (spike) generator.

capacitance, stray capacitance, and diode recovery time combine to distort the square wave.

TIMING-MARKER (SPIKE) GENERATOR

Fig. 6-26 shows the circuit of a simple adaptor for obtaining sharply spiked pulses from a square-wave input signal. Such spikes may be used as timing markers on an oscilloscope screen, for synchronizing control and counting circuits and time-base generators, and for special-purpose modulation. Unlike RC circuits which also form pulses from a square wave, this circuit is not frequency-sensitive.

Operation of the circuit is based upon the slow reverse recovery time of the 1N91 germanium diode (X1). The output of X1 is shown by pattern B. Note from this pattern that X1 passes the positive half-cycles of square-wave input voltage but does not immediately shut off when the negative half-cycle appears. Instead, the few current carriers left at the X1 junction after the forward conduction give this diode a momentary low back resistance, resulting in the initial high-amplitude negative spike current. This current in turn sets up a voltage across R2 which has the same spiked shape. The 1N63S germanium diode then rectifies this voltage, stripping off the square positive half-cycles and passing only the spikes, as shown by Pattern C. This current develops a voltage drop having the same spiked shape across output resistor R3. Output-spike amplitude may be varied by adjustment of the output of the square-wave generator.

Resistor R1 is required only if the output circuit of the square-wave generator provides no low-resistance DC return path for X1.

HARMONIC INTENSIFIER FOR FREQUENCY STANDARDS

The higher harmonics from a secondary frequency standard such as a 100-kc tube or transistor oscillator often are too weak for use. A harmonic amplifier stage sometimes is added to accentuate these harmonics.

Where use of such an amplifier is inconvenient, a good amount of harmonic intensification may be obtained by distorting the output waveform of the frequency standard with semiconductor diodes. Fig. 6-27 shows one type of intensifier circuit. Here, two 1N34AS miniature germanium diodes (X1, X2) are connected back-to-back to handle the entire RF wave. (X1 passes forward current during the positive half-cycle, and X2 during the negative half-cycle.) The distorted current pulses set up an output-signal voltage drop across 100-ohm resistor R.

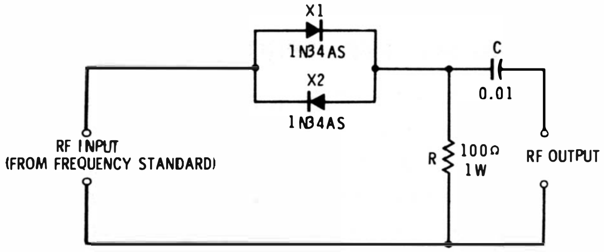

Fig. 6-27. Harmonic intensifier.

For best results, the signal applied to the circuit should have a minimum amplitude of 0.1 volt rms, and for safety to the diodes the signal should not exceed 4 volts rms.

NOISE GENERATOR

The broad-band noise signal is increasingly in demand for testing receivers, amplifiers, and other electronic equipment. An inexpensive noise generator can make use of the noise factor of a reverse-biased silicon point-contact diode.

Fig. 6-28 shows the circuit of a diode noise generator of this type. In this arrangement, a 1N21B silicon point-contact diode (X), is reverse-biased to a maximum of 6 volts by battery B through 50,000-ohm rheostat R1. The reverse current

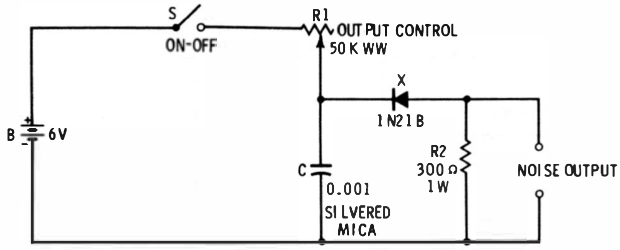

Fig. 6-28. Noise generator.

flows through 300-ohm output resistor R2 and sets up the output noise voltage drop across this resistor. Note that germanium diodes are unsatisfactory for this application.

The noise output voltage is maximum at high current; that is, when R1 is set to zero (or minimum) resistance. This rheostat thus functions as a noise-voltage amplitude control.

This simple generator is useful in testing equipment throughout the frequency spectrum from audio up to several thousand megacycles.

TV ANTENNA COMPASS

Fig. 6-29 gives the circuit of a small-sized instrument which may be used as a signal strength indicator during the orientation of a TV receiving antenna. Meter M reads maximum when the antenna is correctly positioned with respect to the transmitting station. This "compass" is operated directly from the TV receiver.

The instrument is divided into two parts; a probe which is connected to the receiver, and a meter box which is taken to the roof. These two units are connected together by means of a plug-in extension cord. The probe is connected to receiver ground and either the grid or cathode of the picture tube

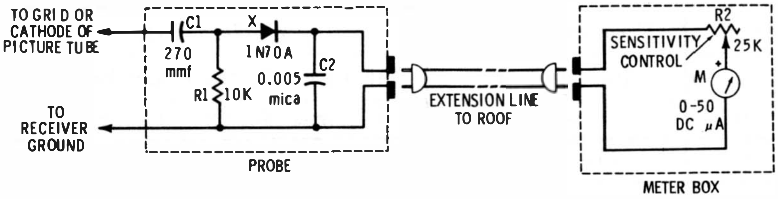

Fig. 6-29. TV antenna compass.

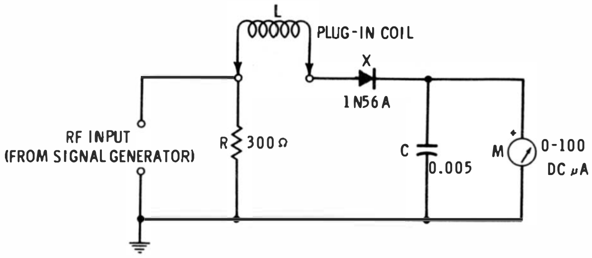

Fig. 6-30. Grid-dip adaptor.

(whichever receives the video channel output), and the receiver is tuned to the station of interest. The 1N70A germanium diode (X) rectifies the video signal, and the resulting direct current deflects the remote 0-50 DC microammeter (M). Rheostat R2 serves as a sensitivity control, and blocking capacitor C1 protects the diode and meter from DC voltages present in the receiver. The operating procedure is straightforward; orient the antenna for maximum swing of meter M, adjusting R2 as required.

CAUTION: When this instrument is connected to ground (B-minus) of a transformerless receiver, one lead of the extension line and the meter box unit may be at power-line potential. This is a serious shock hazard. For maximum safety, operate the TV receiver from an isolating transformer.

GRID-DIP ADAPTOR

The adaptor circuit shown in Fig. 6-30 permits use of an RF signal generator as a grid-dip oscillator. Tuning is done entirely with the signal generator, and the resonant frequency is read from its dial. The adaptor covers the frequency range 100 kc to 300 mc in three plug-in coil bands: 100 to 7,000 kc,

Table 6-2. Grid-dip Adaptor Coil Data

Coil	*Frequency Range*	*Winding Data*
A	100 kc—7 mc	145 turns No. 32 enamelled wire
B	5—40 mc	17 turns No. 22 enamelled wire
C	35—300 mc	3 turns No. 22 enamelled wire

All coils are closewound on ¾″-diameter plug-in forms (Amphenol 24-6H).

5 to 40 mc, and 35 to 300 mc. This circuit is derived from the original design by D. H. Carpenter.

Table 6-2 gives winding instructions for the plug-in coils (L). All coils are wound on ¾″-diameter plug-in plastic forms (Amphenol 24-6H).

To use the adaptor, plug-in the appropriate coil, L, and connect the adaptor to an RF signal generator, either modulated or unmodulated. Set the generator output for full-scale deflection of meter M. Then couple L to the circuit under test, and tune the generator for dip in deflection of M. At this point, read the resonant frequency from the generator dial.

TUNNEL DIODE DIP-METER

The simplicity of a tunnel diode oscillator circuit and the small size of the components (including a 1″-diameter DC meter) greatly reduce the size and weight of a grid-dip oscillator. Fig. 6-31 shows the circuit of a tunnel diode dip-meter operated from a single 1.5 volt flashlight cell. This instrument covers the frequency range 1.1 mc to 150 mc in four plug-in coil ranges: 1.1-3.8 mc, 3.7-12.5 mc, 12-39 mc, and 37-150 mc. Table 6-3 gives winding data for plug-in coils (L).

The series-type negative-resistance oscillator uses a 1N3720 tunnel diode (X1). DC bias is furnished by the single 1.5 volt, Size-D flashlight cell (B). Tuning is by means of a 140-mmf midget variable capacitor (C2) and plug-in coil (L). A portion of the RF voltage developed across the LC2 tank is coupled by C3 to the indicator composed of 1N34A germanium diode X2 and 0-100 DC microammeter M.

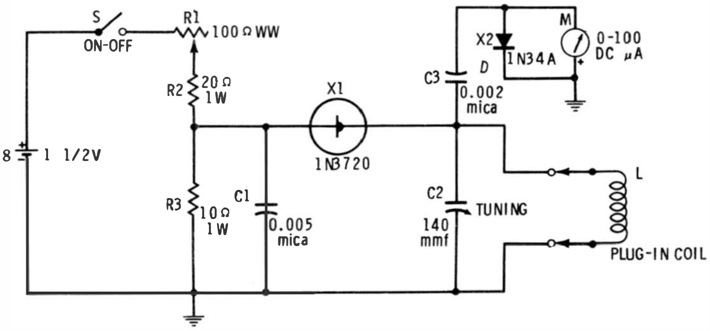

Fig. 6-31. Tunnel diode dip-meter.

Table 6-3. Tunnel Diode Dip-meter Coil Data

Coil	*Frequency Range*	*Winding Data*
A	1.1—3.8 mc	72 turns No. 32 enamelled wire closewound
B	3.7—12.5 mc	21 turns No. 22 enamelled wire closewound
C	12—39 mc	6 turns No. 22 enamelled wire. Space to winding length of 7/16 inch.
D	37—150 mc	Hairpin loop of No. 14 bare copper wire, 2 inches long from end to end. ½" spacing between straight sides of hairpin.

Coils A, B, and C wound on outside of 1"-diameter 4-pin plug-in forms (National XR-1). Coil D mounted inside same type of form.

To operate the instrument, plug-in a coil and close switch S. Adjust rheostat R1 for strongest oscillation, as indicated by maximum deflection of meter M, then couple L to the circuit under test and use the instrument in the usual manner of a grid-dip oscillator.

CHAPTER 7

COMPUTER CIRCUITS

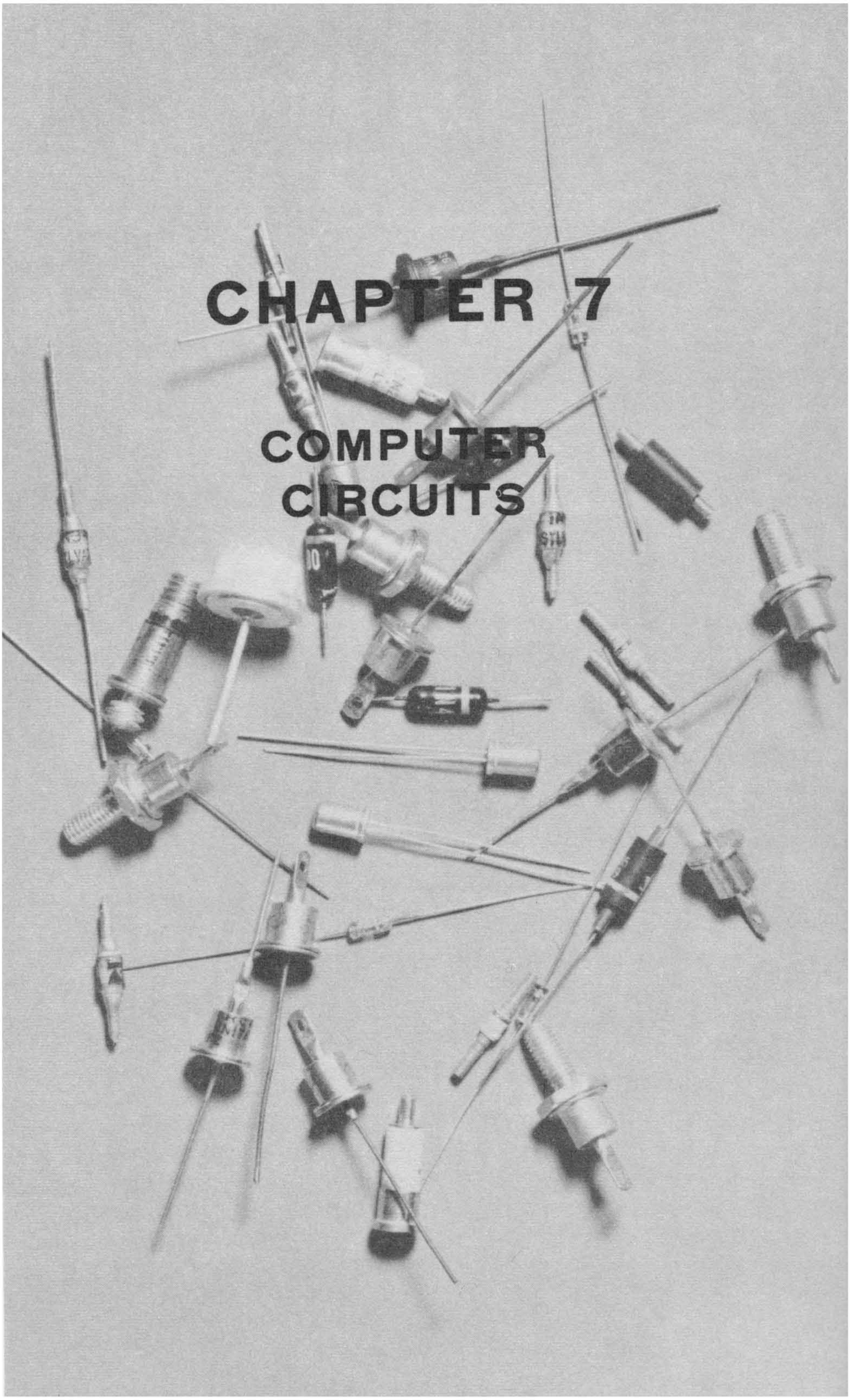

Computer Circuits

In digital computers the semiconductor diode has effected dramatic reductions in size, power consumption, failure rate, and temperature rise. In a machine containing 1,500 diodes, for example, the filaments of diode tubes would require a total of 225 watts. The extent of the size reduction may be grasped from the fact that a modern microminiature computer diode takes 1/18,000 or less of the space occupied by a miniature diode tube.

Considerable effort has been exerted to improve diodes for computer use. Some of their electrical parameters which have been refined include switching time, front-to-back resistance ratio, internal capacitance, forward conductance, and maximum operating voltage. This chapter describes several of the principal applications of diodes in digital computers.

REQUIREMENTS FOR COMPUTER DIODES

The signals in a digital computer are fast pulses which do the counting. Semiconductor diodes used in these machines must have certain closely-held characteristics, otherwise pulses will be lost or extra ones generator—both of which will lead to inaccuracies in computation. Principal among these characteristics are low forward resistance, high back resistance, low self-capacitance, low self-inductance, short reverse recovery time, and extended high-frequency response.

Satisfaction of these requirements has led to the *computer diode,* a component manufactured especially for digital applications. Computer diodes are available in both germanium and silicon varieties over a wide range of electrical ratings. Their reliability ratings are superior.

Aside from stringent electrical requirements, size also is an important consideration in the computer diode. The reason for this is that a digital computer uses only a very few basic circuits, but these are repeated great numbers of times in the machine. Therefore, components used in these iterative circuits must be as small as practicable if the machine is to be kept reasonable in size.

OR CIRCUIT

The OR circuit is the simplest diode logic circuit employed in the digital computer. Fig. 7-1 shows this type of circuit with four inputs against a single output. But the arrangement is not limited to four—the scheme may be repeated endlessly by adding one diode and one resistor for each new input.

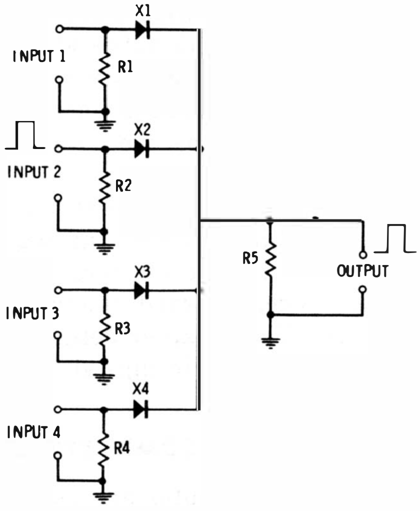

Fig. 7-1. OR circuit.

The circuit has the property that it will produce a positive output pulse, across common-load resistor R5, if there is a positive pulse at any one of the inputs; that is, if 1 *or* 2 *or* 3 *or* 4 is energized. The reason for this is that the input pulse forward-biases the diode, and the resulting pulse current develops a pulse voltage drop across R5.

The resistance of input resistors R1-R4 and output resistor R5 will depend on the diode characteristics, output resistance of pulse source, and input resistance of the circuit to be driven by the OR circuit.

AND CIRCUIT

Fig. 7-2 shows a second type of logic circuit—the AND circuit. Unlike the previous circuit, this one delivers an output pulse only if input 1 *and* input 2 *and* input 3 *and* input 4 are

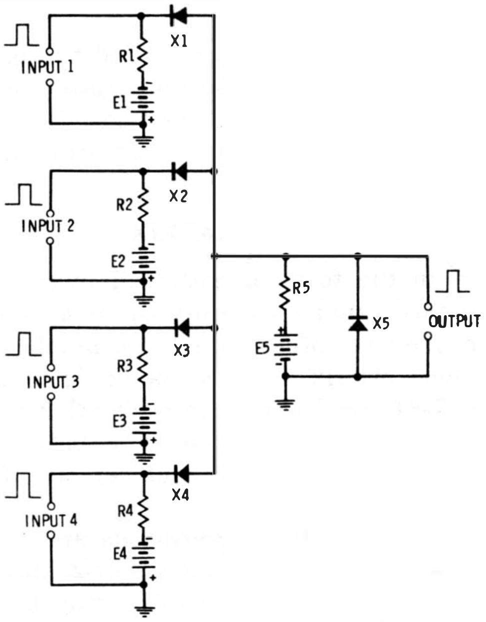

Fig. 7-2. AND circuit.

all energized simultaneously. Although four inputs are shown, the scheme may be repeated as required by adding one diode, one resistor, and one DC source for each input, provided the total current can be safely handled by diode X5.

In this circuit, current flows from each DC bias source and the common bias (E5) through the corresponding input resistor and R5 (thus, in section 1, from E1 and E5 in series through R1 and R5). This results from the fact that the diode is forward-biased by the DC voltage. All diodes, input bias voltages (E1-E4), and input resistors (R1-R4) are identical. In the absence of simultaneous input signals, diode X5 clamps the output below ground (Fig. 1-12, Chapter 1).

When a positive pulse of sufficient amplitude is applied to an input, the corresponding diode is cut off; but this does not produce an output pulse, since current through the other diodes and X5 maintains the clamp. When equal-amplitude pulses are applied to all inputs simultaneously, however, clamping diode X5 is cut off (since X1, X2, X3, and X4 now are cut off, and the X5 current is interrupted), and an output pulse is delivered. Thus, all inputs must be energized at the same time for output to occur.

The values of the input resistances and voltages depend on diode characteristics, input-pulse amplitude, desired output-pulse amplitude, and required E5 voltage. Diode X5 must be rated to pass safely the total pulse current of all input sections.

DIODE MATRIX

Information in the form of electrical pulses may be electronically switched rapidly (at rates up to several million per second) from one to another of a large number of paths by means of a diode matrix. Such a matrix is a lattice of conductors (Fig. 7-3) insulated from each other, and in which diodes are connected to form one-way paths between the horizontal and vertical conductors at certain of their intersections.

There are many matrix configurations and many ways of using each of them. In Fig. 7-3, eight horizontal and six vertical paths are shown, but this number may be extended indefinitely in each direction. In this example, the matrix is supplied with DC, and positive-pulse signals are applied to one or all of six pairs of signal-input terminals. There are eight separate outputs, and only one combination of input signals will switch the DC voltage to a given output terminal for the duration of the pulse. The other output terminals will be low-voltage or zero at this time.

This action is accomplished in the following manner: If there were no diodes in the circuit, the DC voltage would ap-

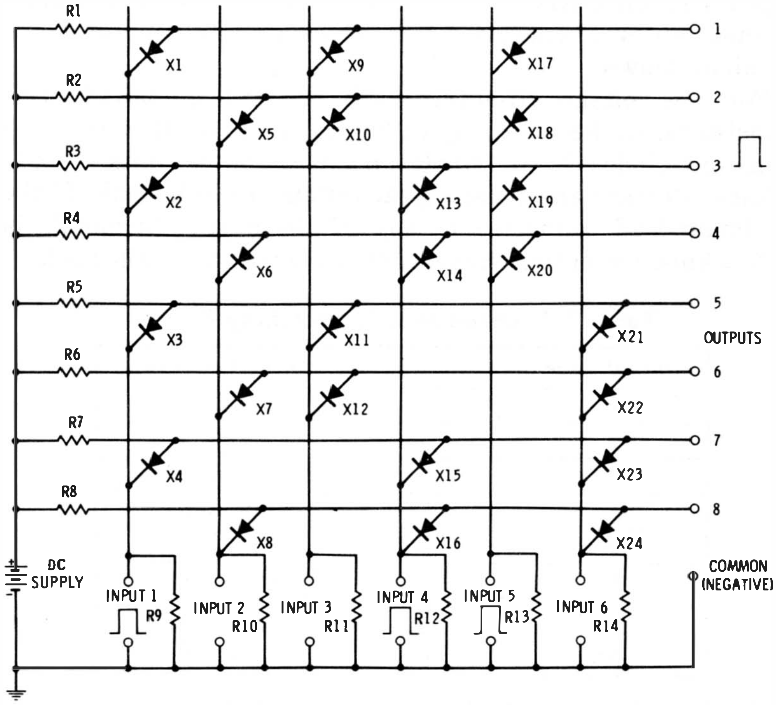

Fig. 7-3. Diode matrix.

pear at all eight output terminals. But the diodes, being forward-connected, ground all the horizontal lines through all the vertical lines to which the diodes are connected. (Thus, horizontal line 4 is grounded to vertical lines 2, 4, and 5 by diodes X6, X14, and X20, respectively. The only voltage that can appear at the output, therefore, is the small voltage drop produced by diode forward current flow through R4-X6-R10 and R4-X20-R13 in parallel, and this can be made nearly zero by selecting R10, R12, or R13 small with respect to R4.)

In the initial condition, therefore, all diodes are conducting. In order for full output voltage to appear at a given output terminal, all diodes connected to the line running to that terminal must be cut off. This is accomplished by applying positive pulses of sufficient amplitude simultaneously at the proper input terminals. Thus, when pulses are applied simultaneously at inputs 1, 4, and 5, as shown in Fig. 7-3, the output pulse appears at terminal 3. Table 7-1 shows the inputs which must be simultaneously energized to produce an output pulse at the terminal shown.

For low-voltage circuitry, such as that employed with transistors, R1-R8 each may be 20,000 ohms, R9-R14 each 500 ohms, all diodes Type 1N800 silicon computer units, supply voltage +9 volts and pulse-signal voltage +1 volt peak. If the minimum load connected to any of the output terminals is 5,000 ohms, the output signal amplitude will be 1 volt peak.

Table 7-1. Diode Matrix Switching Data.

Output Line	*Energized Inputs*
1	1, 3, 5
2	2, 3, 5
3	1, 4, 5
4	2, 4, 5
5	1, 3, 6
6	2, 3, 6
7	1, 4, 8
8	2, 4, 8

One use of a diode matrix is to sense the On and Off condition of tubes or transistors in the flip-flops of a counter. The output pulses activate neon lamp circuitry which indicates the count. In this way, the convenient ten counts of the decimal system may be obtained from a cascade of four flip-flops which are by nature binary (base-2) counters.

COUPLING DIODES IN FLIP-FLOPS

Fig. 7-4 shows the use of coupling diodes in flip-flops. Function and action of these diodes is the same in each circuit. Fig. 7-4A shows a tube circuit, and Fig. 7-4B an equivalent transistor circuit.

Coupling diodes serve to transmit the triggering pulse automatically to the tube which is cut off, rather than applying it simultaneously to both tubes and possibly causing missed switching. When V1 is On, its plate voltage is reduced by plate current flow through R1. V2 is nonconducting at this time, and its plate voltage is high. When the negative trigger pulse is

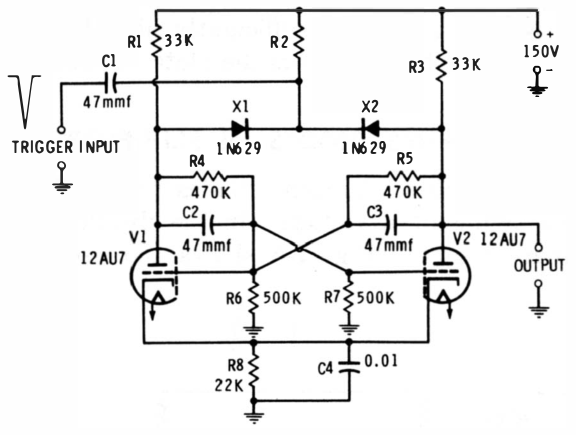

(A) Tube circuit.

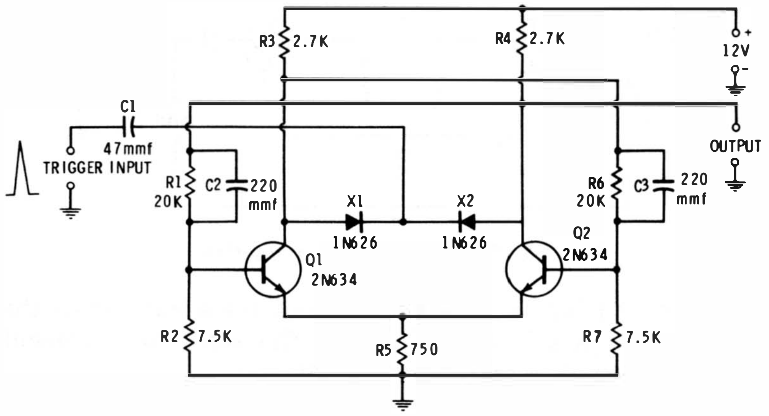

(B) Transistor circuit.

Fig. 7-4. Coupling diodes in flip-flop.

applied, it passes readily through diode X2 to the plate of V2 and switches that tube on.

In Fig. 7-4B, action is the same except for the use of NPN transistors. For PNP transistors, reverse the polarity of all diodes and the DC supply.

Since the diodes are connected between two plates (or two collectors), their reverse resistance must be high in order to prevent an extraneous DC path between the tubes or transistors. Silicon diodes possess a natural high reverse resistance. High-back-voltage germanium computer diodes, such as those shown in Fig. 7-4, also have sufficiently high back resistance when rated at three to four times the plate or collector voltage.

CLAMPING DIODES IN FLIP-FLOPS

As in other circuits, clamping diodes are used in flip-flops to limit the swing of a voltage (in the flip-flop, usually the output-signal voltage). Fig. 7-5 shows the use of clamping diode pairs (X1-X2 and X3-X4) to limit the excursion of the two outputs of a tube-type flip-flop. The same arrangement would be used with a transistor circuit.

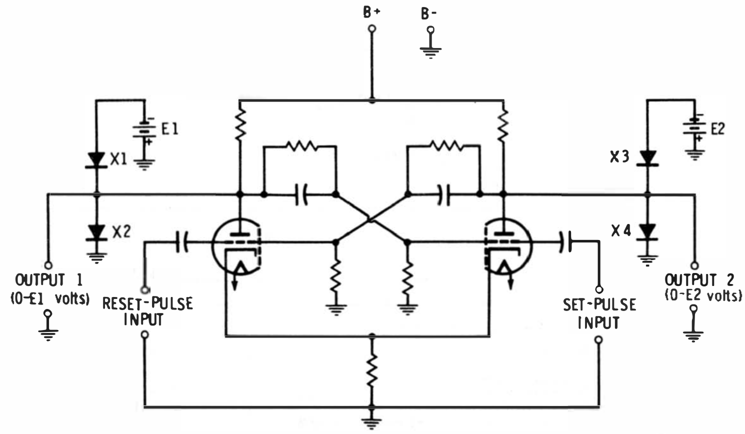

Fig. 7-5. Clamping diodes in flip-flop.

The swing is limited to the voltage established by E1 for output 1 and E2 for output 2 (Fig. 1-12, Chapter 1).

TUNNEL DIODE FLIP-FLOP

Fig. 7-6 shows a simple bistable (flip-flop) circuit employing one 1N3712 tunnel diode (X). This circuit operates with a DC supply of 3 volts at 1.1 ma.

The tunnel diode has two stable states in this circuit; low-voltage high-current, and high-voltage low-current. These correspond respectively to about 55 mv at 0.9 ma, and 250 mv at 0.5 ma.

Initially, the circuit is quiescent in its first state, and approximately 55 mv appear at the output terminals. A 1.5-volt

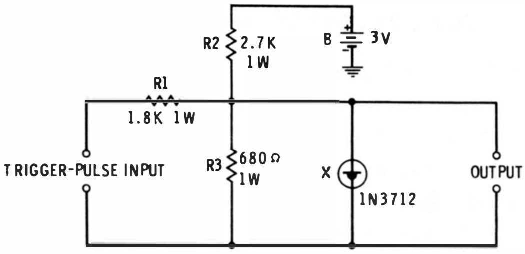

Fig. 7-6. Tunnel diode flip-flop.

peak positive trigger pulse will switch the circuit to its second state, and approximately 250 mv will appear at the output. A subsequent 1.5-volt peak negative pulse will switch the circuit back to its first (low-output-voltage) state.

DIODE-CAPACITOR MEMORY CELL

At slow counting speeds, a charged high-quality capacitor may be used as a memory cell in a computer in which only a few storage elements are required. A silicon diode prevents capacitor discharge back through the writing source.

Fig. 7-7 shows the circuit. A positive Write pulse applied to the Input terminals charges the 0.1-mfd capacitor (C) through the low forward resistance of the 1N3728 silicon diode (X). The charged voltage of the capacitor will be equal to the peak pulse amplitude less the small forward voltage drop across the diode. This capacitor must have low leakage. When the pulse ceases, the capacitor holds the charge, since it cannot discharge back into the pulse source, because of the extremely high reverse resistance of the diode. This charged voltage may be detected (read) at the Output terminals as the stored information. The Read circuit should have low resistance, in order to discharge the capacitor.

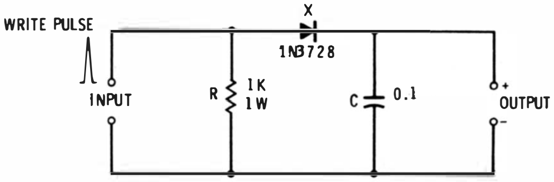

Fig. 7-7. Diode-capacitor memory cell.

TUNNEL-DIODE MEMORY CELL

The bistable tunnel-diode circuit shown in Fig. 7-6 may be used as a nondestructive memory cell, in addition to its intended function as a flip-flop.

The positive input pulse is the Write signal, and it switches the output to its high-voltage stable state. This state, representing storage in the memory cell, may then be read repeatedly with a high-resistance circuit (1,000 ohms or more) without destroying the storage. A subsequent negative input pulse acts as an Erase signal, "emptying" the cell by switching the circuit to its low-voltage stable state.

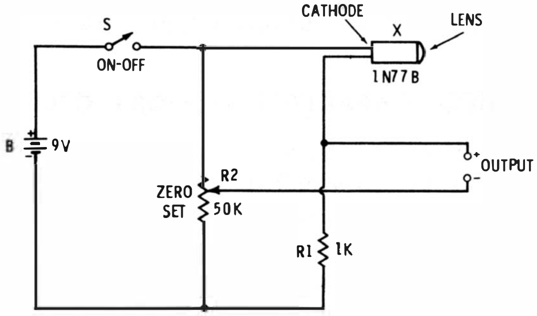

Fig. 7-8. Photodiode card or tape reader.

PHOTODIODE TAPE OR PUNCHED CARD READER

Fig. 7-8 shows a fast-acting photoelectric circuit which may be used for reading punched cards or punched tape. The light-sensitive element is a 1N77B germanium photodiode (X). This is a tiny unit (0.006-inch in diameter) with a built-in lens in one end.

The diode is connected in a bridge circuit for balancing out its dark current (about 10 microamperes). Adjustment is simple; close switch S, darken the cell, and set potentiometer R2 for zero DC, as read with a DC VTVM connected to the OUTPUT terminals. After the circuit has been zeroed, light intensity of 70 foot-candles will produce an output of 6 volts across a 1-megohm load. The output may be applied to a suitable DC amplifier for boosting in power.

Maximum current drain from the 9-volt supply (B) is 200 microamperes.

CHAPTER 8

EXPERIMENTER'S CIRCUITS

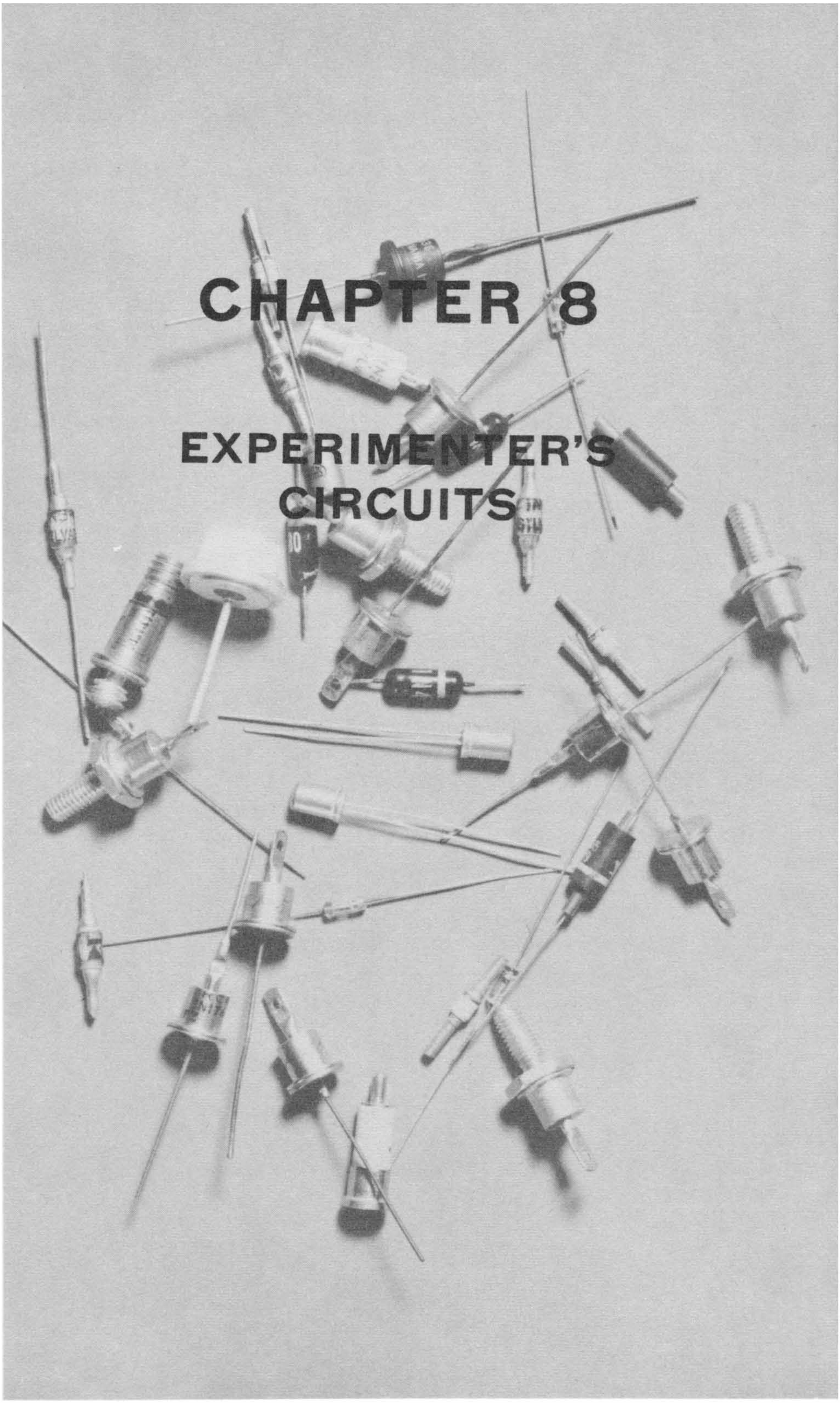

Experimenters' Circuits

Diode experimenting goes on constantly. As might well be expected, the electrical characteristics of this simple component stimulate thinking about new applications. Many of the new circuits which result from this activity, however, are laboratory curiosities only (a sizeable number were left out of this book because of their marginal operation). But others give promise of reliable operation after a reasonable amount of improvement.

The circuits presented in this chapter will be of interest to the experimenter. Often, it is hoped, the published circuit will point the way to some other application when it is not itself directly usable by the reader.

VARACTOR DIODE TUNED CIRCUIT

Small, inexpensive varactors, such as the Varicap, are convenient for tuning an RF circuit by means of an adjustable DC voltage. The tuning voltage reverse-biases the varactor.

Fig. 8-1A shows a typical circuit. The capacitance of the V56 Varicap is varied from 32 to 145 mmf by varying the bias from zero to 15 volts. The bias is applied in series with a 1-megohm resistor (R) which acts both as an isolator and RF choke. Since the V56 draws virtually no current for its operation, no voltage is lost across the resistor. The 0.01-mfd DC-blocking capacitor (C) prevents coil L from short-circuiting the DC bias. The reactance of this capacitor is so low that the varactor is the tuning element.

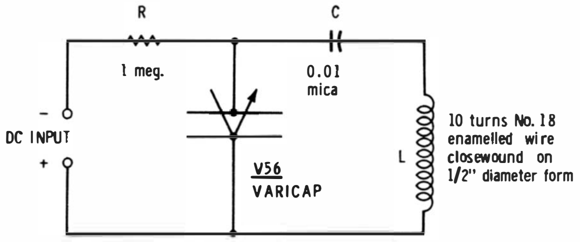

(A) Circuit.

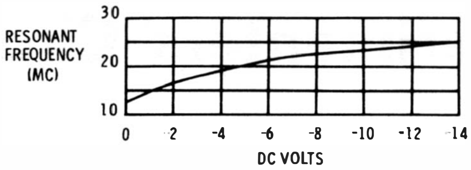

(B) Response.

Fig. 8-1. Varactor tuned circuit.

The coil specified here covers the range 12 to 25 mc as the DC is varied from zero to −14 volts. Fig. 8-1B shows this response. Other inductance values will tune over other ranges.

RF energy may be coupled into the tuned circuit by means of a small link coil, or through a 100-mmf capacitor connected to the junction of C and L. The peak amplitude of the RF voltage across D should not exceed 0.1 volt, otherwise it will vary the varactor capacitance.

TUNNEL DIODE CODE-PRACTICE OSCILLATOR

The code-practice oscillator shown schematically in Fig. 8-2 can be built as small as a shirt-pocket hearing aid. It is a keyed

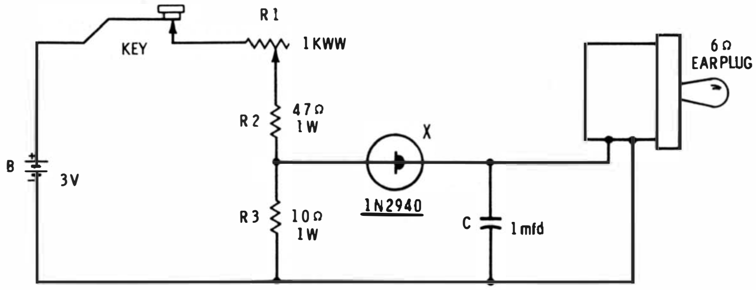

Fig. 8-2. Tunnel diode code-practice oscillator.

audio oscillator using a 1N2940 germanium tunnel diode (X). The tone-determining tuned circuit is comprised of capacitor C and the inductance of the earphone. The frequency is approximately 2,000 cps when C is 1 mfd. This may be lowered by decreasing C, and vice versa.

To prevent upsetting the negative resistance of the diode, the earphone must have low DC resistance and low impedance. Thus, a 6-ohm earplug type unit is shown. A pair of low-impedance headphones also might be used.

To place into operation, close the key and adjust R1 for strongest oscillation. Operate key slowly several times to insure that oscillator starts readily, readjusting R1 if starting is sluggish.

DIODE AS SOLAR CELL REGULATOR

Silicon solar cells are practical for light-powering transistorized equipment and short-distance telephones, but the DC output of these cells varies widely under differing conditions of illumination.

A 1N34A germanium diode, forward-connected across a silicon cell, will reduce the swing during bright illumination, tending to stabilize the DC output (Fig. 8-3). The underlying mechanism is the voltage-dependent forward resistance of the diode. This resistance decreases as the photocell output voltage increases, thus loading the cell more heavily at the high voltages and pulling the voltage down.

A 1N34A diode holds the output of an International Rectifier Corp. Type S1M cell at approximately 0.25 volt, 10 ma under widely varying bright-light conditions.

DC TRANSFORMER

The circuit shown in Fig. 8-4 accepts a DC input of 0-1.5 volts and delivers a DC output of 0-30 volts into a high-resistance load. It is called a DC transformer because it seemingly steps up the DC input signal through transformer T2. From its operation, this circuit may be considered a DC voltage amplifier; but it provides no current amplification or power amplification, so it is effective only when operating into a high-resistance device, such as a DC VTVM or DC oscilloscope. Providing, as it does, a step-up ratio of 20, it is often used to

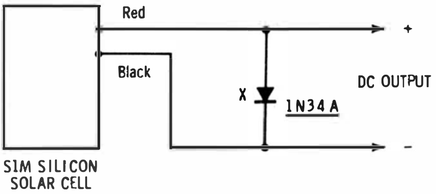

Fig. 8-3. Diode as solar cell regulator.

amplify small DC voltages for reading on the 0-1.5-volt scale of a VTVM.

The circuit is a balanced modulator, nulled by adjustment of potentiometer R1. The excitation is 6.3 volts AC supplied by the filament transformer, T1. The modulator diodes (X1, X2) are the units of a 1N35S matched-diode assembly. When the circuit is completely nulled, no AC voltage appears at the DC INPUT terminals and no voltage appears at the DC OUTPUT terminals. When a voltage is applied to the DC INPUT terminals, forward current flowing through X1 unbalances the circuit proportional to the applied DC voltage, and AC passes through the primary of transformer T2. This voltage is stepped up by the transformer and rectified by the D1607 high-conductance gold-bonded diode (X3). Output capacitor C is charged to the peak value of this voltage. The load connected to the DC OUTPUT terminals must be 1 megohm or higher.

To adjust the device;

1. Plug into AC power line.
2. Connect a DC VTVM to the DC OUTPUT terminals.

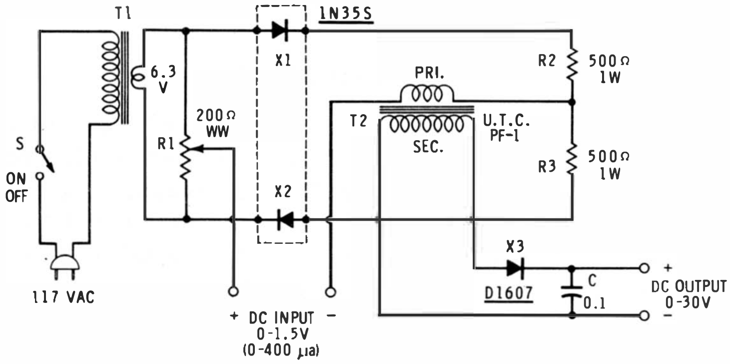

Fig. 8-4. DC transformer.

3. Close switch S.
4. With no connection to the DC INPUT terminals, adjust R1 for null. If zero cannot be reached as a null, the diodes should be more closely matched.
5. Apply a signal of 1.5 volts in the polarity shown to the DC INPUT terminals. The VTVM should deflect to 30 volts.

Appendix

DIODE SYMBOLS USED IN THIS BOOK

CONVENTIONAL DIODE

ZENER DIODE

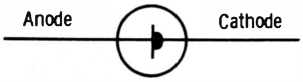

TUNNEL DIODE

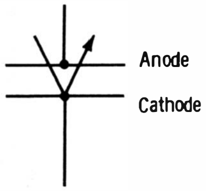

VARACTOR (VARICAP)

The anode is that electrode which is connected to the positive (+) terminal of the DC supply for forward current flow.

ALWAYS CONNECT THE DIODE EXACTLY AS SHOWN IN CIRCUIT DIAGRAM.

Index

DIODE
CIRCUITS
HANDBOOK

by RUFUS P. TURNER

Did you ever marvel at the simple ingenuity of some of the diode circuits you see in technical books or journals? They appear obvious when you see them—so obvious that you wonder why you didn't think of them. And you could, if you *really* understood diodes. Many of these circuits take advantage of some peculiarity of a particular type of diode—i.e., frequency response, recovery time, etc. If you knew these differences, your understanding of diode application would be greatly enhanced, and the vast range of diode circuitry would be at your command.

Diode Circuits Handbook will end any confusion you may have regarding diodes. Using nearly 100 examples to show the proper application of diodes, it explains the principles of operation of each type of diode circuit. The circuits shown are in current use in radio and television receivers and transmitters; audio amplifiers and power supplies; and control devices, test instruments, and computers.

Also included is a chapter on experimenter's circuits, showing how to utilize the theory contained in the earlier chapters.

ABOUT THE AUTHOR

Rufus Turner is no stranger to readers of technical literature. A prolific writer, he has some 2,500 magazine articles and a dozen books to his credit. Having earned his BA degree from Los Angeles State College and his MA degree from U.S.C., Mr. Turner is now a candidate for a Ph.D. from U.S.C. and is currently a registered professional engineer in both California and Massachusetts. These achievements accent his ability as a writer of clear, concise, easy-to-understand material.

$2.50
DIT-1

®
HOWARD W. SAMS & CO., INC.
THE BOBBS-MERRILL COMPANY, INC.