F M

TRANSMISSION *And* RECEPTION

By

JOHN F. RIDER

and

SEYMOUR D. USLAN

JOHN F. RIDER PUBLISHER, INC.

480 Canal St. New York 13, N. Y.

Copyright 1949 by
JOHN F. RIDER

All rights reserved including that of translation into the Scandinavian and other foreign languages

First Printing, January, 1948
Second Printing, February, 1948
Third Printing, March, 1948
Fourth Printing, May, 1948
Fifth Printing, August, 1948
Sixth Printing, October, 1948
Seventh Printing, December, 1948
Eighth Printing, February, 1949
*Ninth Printing, May, 1949
Tenth Printing, November, 1949

**See preface.*

Printed in the United States of America

PREFACE

FREQUENCY MODULATION in general needs no introduction to the man who is interested in radio communication, no matter how remotely — he hears about it and sees references to it daily — it is literally thrust upon him from every side. Because of its comparatively recent entrance into the communication picture, only a relatively few books about f.m. have appeared, and these have been introductory in nature for the most part.

Naturally when something new is brought out, numerous questions arise in the mind of every technically inclined man as to how and why it functions and how it can be employed. This book is intended to answer as completely as possible those questions about f.m., and material has been included which hitherto has not been published.

Due to the importance that f.m. has assumed within the last decade, we have incorporated in this book those basic principles underlying the operation of the complete f-m transmitter as well as the receiver, the discussion of transmitters embracing both the narrow-band and wide-band types that are being manufactured today for service in many different fields. Here both direct f-m and indirect f-m (p-m) transmitters are considered with all the essential theory necessary for a complete understanding of f-m and p-m transmission. In order that the f-m picture may be complete, the subject of both transmitting and receiving antennas is covered and then the various types of receivers, their functioning and servicing. In short, f.m. is considered from the point in the transmitter where it first becomes a modulated signal until it is translated into sound energy by the loudspeaker in the receiver.

The book is divided into two parts: the transmission of the f-m signal in the first and its reception in the second. In the first part, the underlying theory of f.m. and p.m. is included as well as the propagation of f-m signals, the basic characteristics of f-m transmitters and an analysis of transmitters that are in use today. In no other book of its kind, will there be found as complete a coverage of f-m transmitters as in this one. The first part closes with a discussion of the latest in transmitting antennas.

The second part of the book deals with f-m receiving antennas and the f-m receiver. The discussion of the latter takes into account every individual stage relative to f.m. and compares them to a-m sets. At the time of writing, four different types of f-m detectors are in use: the limiter-discriminator type, the ratio detector, the oscillator detector

(locked-in oscillator) and the FreModyne detector, and these are discussed in detail. The last two chapters are devoted to the alignment and the servicing of receivers and in the appendix will be found some data on the use of vectors and other pertinent information of value.

It is believed that this book will afford the reader an opportunity to gather and understand all the features of f.m. starting from the transmitter and working straight through the receiver. In order to achieve fully the desired simplicity, mathematics have been kept to the necessary minimum and illustrations have been employed liberally so that a clearer picture of the whole topic would be given the reader.

The authors wish to extend their gratitude to Major Edwin H. Armstrong, the Federal Telephone and Radio Corp., General Electric Co., Western Electric Co., Raytheon Mfg. Co., Westinghouse Electric Corp., and others for supplying them with technical data which are included in this book and for their cooperation. Appreciation is also extended to Richard F. Koch, of the John F. Rider Laboratories, for his help in reading the manuscript of this book and for his suggestions.

JOHN F. RIDER

SEYMOUR D. USLAN

December 18, 1947

PREFACE TO THE NINTH PRINTING

The principal change in this new printing of "FM Transmission And Reception" is the inclusion of a set of questions at the end of each chapter. These questions were inserted in order to make this text more useful to technical schools, as well as to the reader that uses the text for self-study.

It was felt that the student, or reader using the book for self-study, should understand the principles brought out in each chapter and the questions have been prepared with this thought in mind.

Besides the insertion of the questions there have also been a number of revisions in the text material itself. The majority of these changes are due to revisions in certain governmental regulations.

JOHN F. RIDER
SEYMOUR D. USLAN

May 1, 1949

TABLE OF CONTENTS

PART I

CHAPTER 1. FUNDAMENTAL CONSIDERATIONS 1
Modulation—1. Amplitude Modulation—4. Frequency and Phase Modulation—11. The F-M and P-M Transmitter—21. Relative Factors in the Transmission of F-M Signals—24. The F-M Receiver—25. Questions—28-Q1.

CHAPTER 2. FREQUENCY MODULATION 29
F-M Bandwidth and Sidebands—32. Percentage of Modulation —39. Modulation Index—Deviation Ratio—40. Interference Between Signals—44. Questions—46-Q1.

CHAPTER 3. ESSENTIALS OF F-M TRANSMITTERS 47
The Basic Transmitter—47. Simple Frequency Modulator—49. Reactance Tubes—54. Reactance Tube Modulator (Frequency Modulator)—62. Phase Modulator—68. Automatic Frequency Control—72. Frequency Multiplication—76. The Need for Frequency Multiplication—81. Amplitude to Phase to Frequency Modulation—84. The Armstrong System—86. Other Transmitter Stages—91. Questions—92-Q1.

CHAPTER 4. TRANSMITTERS OF TODAY 93
Audio Correction—94. Balanced Modulators—96. ARMSTRONG "DUAL CHANNEL" TRANSMITTER—103. THE WESTERN ELECTRIC DIRECT F-M TRANSMITTER—117. THE CBS DIRECT F-M TRANSMITTER—123. THE NBC DIRECT F-M TRANSMITTER—126. THE GENERAL ELECTRIC TRANSMITTER—130. THE FEDERAL DIRECT F-M TRANSMITTER—138. THE RAYTHEON INDIRECT F-M TRANSMITTER—148. THE WESTINGHOUSE DIRECT F-M TRANSMITTER—153. THE REL INDIRECT F-M TRANSMITTERS—168. THE COLLINS PHASITRON TRANSMITTER—168. PRE-EMPHASIS AND DE-EMPHASIS —170. NARROW-BAND F.M.—174. Questions—188-Q1.

CHAPTER 5. THE TRANSMISSION OF F-M SIGNALS . . . 189
THE TRANSMITTING ANTENNA—190. Propagation of the F-M Signal—203. Service or Coverage Area of F.M.—208. Interference —210. Questions—213-Q1.

PART II

CHAPTER 6. RECEIVING ANTENNAS 214
The Signal Pickup—214. Voltage and Current Distribution—216. The Half-Wave Pipole Antenna—217. Antenna Resistances 219—Resonance and Impedance—220. Impedance Matching—220. Q of Antenna—224. The Folded Dipole—225. Orientation of F-M Receiving Antennas—228. Dipole With a Reflector—229. Length of the Half-Wave Antenna—231. Maximum Voltage Input—234. Noise Reduction—235. Other F-M Receiving Antennas—236. Notes on Installation—246. Questions—248-Q1.

CHAPTER 7. THE F-M RECEIVER 249

Similarities and Differences Between the A-M and F-M Receiver—249. The R-F Stage—251. Mixer-Oscillator and Converter Systems—256. SENSITIVITY AND SELECTIVITY—263. THE I-F SYSTEM—267. DEMODULATION-DETECTION—276. THE LIMITER STAGE—277. THE DISCRIMINATOR DETECTOR—293. The Double Tuned Discriminator—293. The Phase Discriminator—299. Modifications of the Phase Discriminator—308. THE RATIO DETECTOR—313. Simplified Ratio Detector—313. Practical Ratio Detector—315. AVC From Radio Detectors—318. Other Ratio Detectors—318. THE OSCILLATOR DETECTOR—321. COMPARISON BETWEEN DETECTOR SYSTEMS—326. THE AUDIO SYSTEM—327. F-M TUNERS—330. Questions—339-Q1.

CHAPTER 8. ALIGNMENT OF F-M RECEIVERS 340

METER METHOD OF F-M ALIGNMENT—342. Discriminator Detector Alignment—343. Limiter Alignment—345. I-F Alignment of Receivers Employing the Limiter Discriminator—346. R-F and Oscillator Alignment—349. Ratio Detector and I-F Alignment—350. Locked-In Oscillator Detector Alignment—353. VISUAL METHOD OF ALIGNMENT—356. F-M Signal Generator With Sine Wave Modulation—357. Signal Generator Empolying Wobbulator—361. Visual Alignment of the Discrimniator Detector—363. Visual Alignment of Limiter and I-F Stages—364. R-F and Oscillator Visual Alignment in Limiter-Discriminator Receivers—365. Visual Alignment of Ratio Detector and I-F Stages—365. Oscillator and R-F Alignment of Ratio Detector Receivers—367. Visual Alignment of the Locked-In Oscillator Detector Receiver—367. Phase Control in Visual Alignment—369. The Use of Marker Frequencies—370. VISUAL AND METER METHOD COMBINED—372. Questions—374-Q1.

CHAPTER 9. SERVICING F-M RECEIVERS 375

Antenna Relocation—376. Image Response—377. Signal Tracing—378. Noise—379. Oscillator Troubles—381. Microphonic Ganged Capacitors—384. Servicing Through Alignment—385. Cathode Lead Inductances—386. Critical Lead Dress—389. Questions—390-Q1.

APPENDIX 391

Reactance Tube Chart—391. VECTORS—391. POWERS OF TEN—395. FreModyne Circuit—397. F-M GROUND WAVE SIGNAL RANGE—398. I-F RESPONSE CURVES—400.

BIBLIOGRAPHY 401

INDEX 405

PART I
TRANSMISSION

CHAPTER 1
FUNDAMENTAL CONSIDERATIONS

The concept of frequency modulation (f.m.) is not new, but only comparatively recently has it been commercially successful. Before the achievement of f.m. the type of modulation employed was amplitude modulation (a.m.). So far as the majority of people even in the radio field were concerned, the only method of conveying intelligence from the transmitter was to amplitude modulate the carrier. The prevalence of this belief was only natural, because a.m. *was* the only form of modulation used in the past, and very little was known about other types of modulation. Even ten years ago, if one had made a survey and asked the question of how intelligence could be conveyed from the transmitter, the majority of replies, from others than engineers engaged in radio work, would have indicated use of an audio signal which varied the amplitude of the carrier. In short, it was not generally known that other forms of modulation could be used. Therefore, a thorough understanding of what is meant by modulation as applied to radio cannot but be helpful.

Modulation

The primary purpose of radiobroadcasting is to transmit intelligence. This intelligence finally appears as an audible sound at the receiver. In order that these audio signals may be received, they must be propagated through space by some special means. Audio signals by themselves cannot be radiated into space as electromagnetic energy and travel great distances. Some method must be used of helping to propagate the intelligence through space.

It was known that signals far above the audio range could be propagated through space very easily in the form of electromagnetic waves. These signals were referred to as radio-frequency waves (r.f.) or carrier waves and could be of almost any frequency, as long as they were of an r-f nature, and still be radiated. It was possible to use these r-f waves as a means of transporting the audio signals to the

receivers. Briefly this was accomplished by superimposing the intelligence on the r-f wave (that is, the carrier) so that this new r-f wave had one of its characteristic features varied in accordance with the method of superimposing the intelligence. This superimposition of one signal on another is termed *modulation*, and the new wave is termed a *modulated wave*. This principle is well known to many, but its analysis is very necessary for fully understanding the topic of f.m., as well as other types of modulation.

When a carrier signal of constant amplitude and power is generated by a transmitter without any intelligence superimposed upon it, it will be accepted by the receiver, but no information or audio will appear in the output of the set. The underlying principle behind transmission for the proper reception of intelligence is to use a carrier that can travel through space (that is, be propogated) and that can be varied somehow in accordance with the superimposition of the intelligence to be transmitted. This variation of the carrier can be accomplished by a number of methods which will soon be explained. In dealing with r-f carrier and other frequencies they all will be represented as sinusoidal in nature to facilitate the discussion.

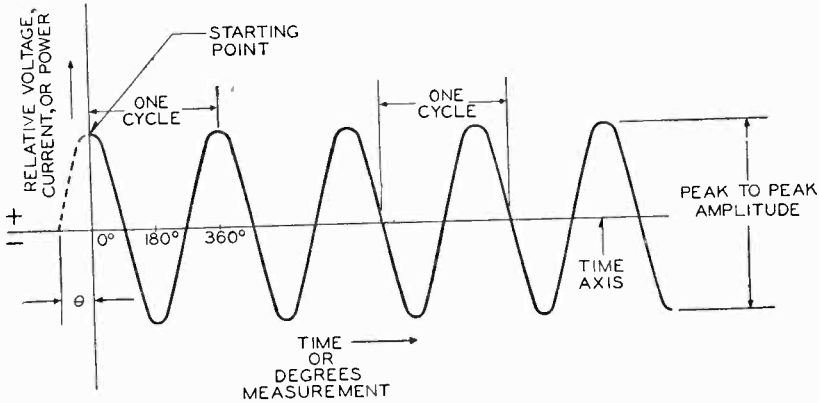

Fig. 1-1. Representation of a carrier wave which is varying sinusoidally, on which its three characteristics, amplitude, frequency, and phase are indicated.

In Fig. 1-1 an ordinary carrier signal which is varying sinusoidally is illustrated. The height of the signal is called its strength or amplitude. The strength of the signal between the maximum positive and negative peaks is referred to as its peak-to-peak amplitude. Consequently, amplitude is one of its characteristics. The time that part of the wave takes to complete one swing going through a positive and negative part of the signal and ending at the same level where

it started is called one cycle of the signal. The number of times that the cycle repeats itself in each second is called the frequency of the signal, and it is expressed in some number of cycles per second. Thus, frequency is another characteristic of the signal. It may seem very elementary to indicate these well-known basic characteristics, but the purpose will be evident when the modulation of the carrier is analyzed under different conditions.

One more basic characteristic of a wave is its phase relation. This is a difficult concept to understand especially when only one signal is considered. If two different sinusoidal signals existing at the same point were compared, the idea of phase relations would be easily seen; however, this is not the situation in Fig. 1-1. In order to understand the fact that, besides amplitude and frequency, phase is also an inherent characteristic of any alternating wave, some reference point has to be used. It is known that every cycle of frequency revolves through 360° with reference to the time axis. That is, by the time one cycle is completed it will have traversed 360°. The reference to 360° in every cycle is a concept that is very well known, and there is no necessity to elaborate any further about it. When the phase of a signal is referred to, it is usually related to some other signal, but when only one signal is under discussion, the start of the alternating motion of the signal is referred to an arbitrary set of axis. In this respect the phase relation of a signal by itself can be understood.

When any graph is made, horizontal and vertical lines (set of axes) are assigned to represent the respective variables to be plotted. The same is true for a sine wave. A set of axes is used to indicate the true alternating motion of the wave with respect to all of the signal's characteristics. This is so in the wave of Fig. 1-1. The sine wave is seen to be alternating above and below a reference axis called the time axis or baseline. Its amplitude and frequency are readily noticed. The wave shown is seen to be starting out, not at the crossing between the axis, but at the maximum amplitude of the signal. Since every half cycle represents 180° and every quarter of a cycle 90°, the signal shown in Fig. 1-1 is said to have a 90° phase lead. Consequently, it is seen that phase is one of the basic characteristics of any wave. Naturally, the phase relation can be zero degree.

In practice, when phase relationship is given, it is almost always made with reference to some other signal. This will be evident as this chapter progresses. It will be seen later that there is a very close relationship between the frequency and phase of a signal.

The illustration of how simple it is to represent a signal in vector form at its starting point with relative phase is shown in Fig. 1-2. The length of the vector A represents the magnitude or peak amplitude of the sine curve, whether it be voltage, current, or power. The

displacement or direction of the vector from the 0° reference point is the relative phase of the signal, and it is seen to be 90° leading. If a quick representation of the instantaneous amplitude and phase relation of a signal is desired, the use of vectors will greatly clarify the picture. The use of vector representation is more thoroughly explained in the Appendix.

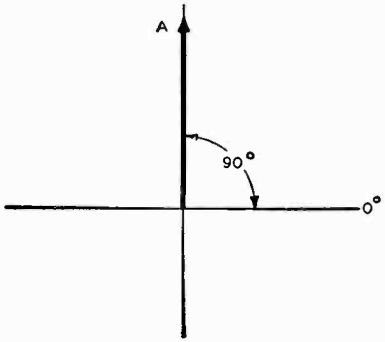

Fig. 1-2. The relative phase of the sine wave in Fig. 1-1 is shown vectorially here by the vector *A*, being at 90° to the 0° axis.

It has been stated that to transmit intelligence a signal of radio frequency has to be used as the carrier for the intelligence. In order that this carrier properly support the intelligence signal, it has to be *modulated* by the intelligence signal. *With respect to the radio field, modulation is attained by varying one or more of the three characteristics of the carrier (that is, its amplitude, its frequency, or its phase) in accordance with the instantaneous variations of some external signal which is superimposed upon the carrier.* To realize the latter part of this statement fully, it must be remembered that the modulating or intelligence signal is also varying in accordance with time.

If the amplitude of the carrier signal is varied in accordance with some superimposed audio signal, *amplitude modulation* or a.m. is attained. If the frequency of the carrier is varied, *frequency modulation* or f.m. is attained. If the phase of the carrier is varied, then *phase modulation* or p.m. is attained. Thus, any of three different types of modulation can be directly obtained. As distinguished from a.m., the other two types of modulation are sometimes referred to as subdivisions of a modulation termed *angular modulation.* This terminology arises from the fact that angular relations undergo changes in both f.m. and p.m.

Amplitude Modulation

As pointed out in the preceding section, the three main charac-

teristics of an r-f wave (as well as any signal) are its amplitude or strength, its frequency, and its phase. If an audio signal, for example, speech or a pure sine wave, is superimposed upon the r-f wave so that the amplitude of the r-f wave varies in accordance with the varying amplitude of the audio signal, then the r-f wave is said to be amplitude modulated. In other words, the combination of the modulating signal, which is the speech, the music, or the information to be conveyed, with the radio signal, is accomplished in such a manner that the modulating signal alternately increases and decreases the amplitude of the radio signal; this variation takes place at a rate determined by the *frequency* of the audio signal. The extent of this change in carrier level depends upon the relative *magnitudes* of the audio and the carrier signals at the instant they are combined. Neglecting the degree of modulation at the moment, let it be said that

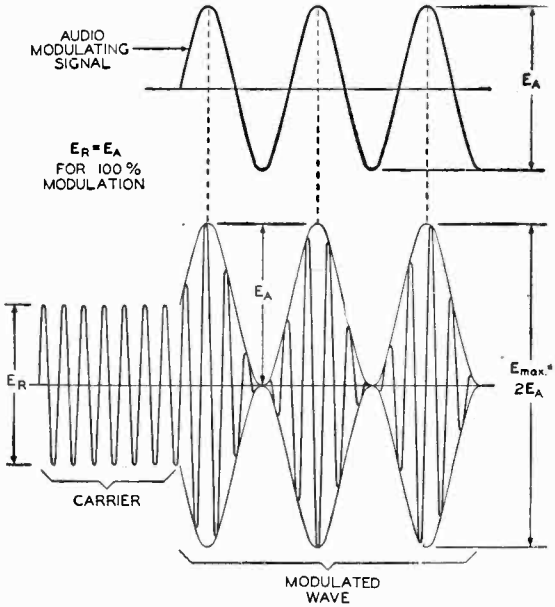

Fig. 1-3. The peak amplitude of the audio modulating signal is equal to the peak amplitude of the carrier wave, resulting in the carrier being 100-percent amplitude modulated.

the stronger the audio signal combined with the carrier, the greater is the change in the amplitude of the carrier. This is of particular importance because the degree of modulation depends upon the amount that the carrier amplitude is changed. If the strength of the audio signal is such that its peak-to-peak amplitude is equal to the peak-to-peak amplitude of the carrier, 100 percent modulation exists. (The peak amplitude of one is equal to the peak amplitude of the other.) This 100 percent a-m wave is illustrated in Fig. 1-3. If the peak amplitude of the audio signal is *less* than the peak amplitude of the carrier, the modulation that exists is less than 100 percent.

In Fig. 1-4 is shown an a-m wave that is 50 percent modulated. That is, the peak amplitude of the audio is equal to half the peak amplitude of the carrier. As stated previously the instantaneous amplitude of the audio signal adds to or subtracts from the instantaneous amplitudes of the carrier resulting in an a-m signal.

Modulated signals for 100 percent modulation and below have been shown in Figs. 1-3 and 1-4. However, a different type of waveform exists when the amplitude of the modulating signal is greater than

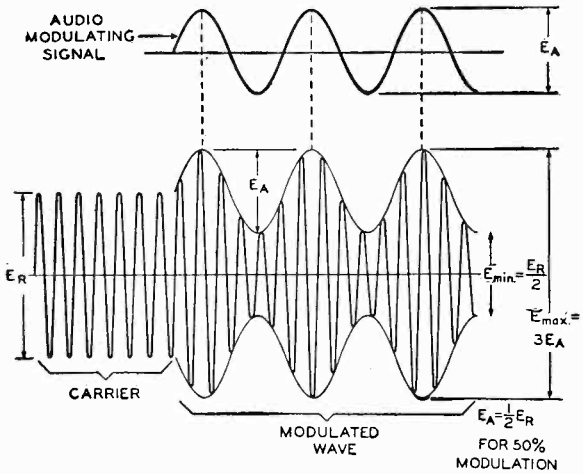

Fig. 1-4. The peak amplitude of the audio modulating signal is one-half the peak amplitude of the carrier, resulting in a 50 percent a-m wave. Compare with Fig. 1-3.

that of the carrier. This is termed overmodulation, and a picture of an overmodulated wave is illustrated in Fig. 1-5, together with the modulating signal. It will be noticed that an overmodulated wave is not continuous and as such does not result in the full reproduction, upon demodulation, of all the audio signal. This results in distortion in the output of the receiver.

To determine the percentage of modulation of a signal (not overmodulated) viewed on an oscillograph and having the type of pattern shown in Figs. 1-3 and 1-4, the following simple procedure should be followed:

Measure the maximum peak-to-peak amplitude of the modulated signal. This is designated as E_{max} as shown in Fig. 1-4. Next measure the minimum peak-to-peak amplitude of the modulated signal. This is designated as E_{min} as seen in Fig. 1-4. Then to determine the percentage modulation the following expression is used:

$$\textit{Percent modulation (a.m.)} = \frac{E_{max} - E_{min}}{E_{max} + E_{min}} \times 100$$

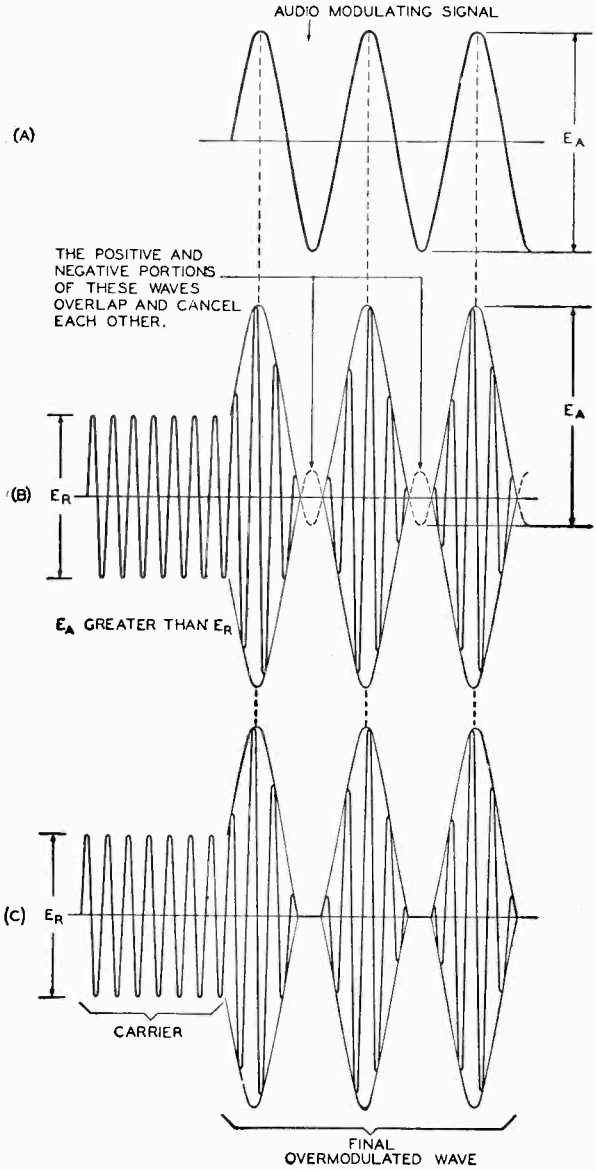

Fig. 1-5. When the peak amplitude of the modulating wave (A) is greater than the amplitude of the carrier wave, the resulting modulated wave (C) is said to be overmodulated. Notice that the resultant overmodulated wave is not continuous, which means that the output of the receiver will be distorted.

For instance, in Fig. 1-4 the E_{max} is equal to $3E_A$ and E_{min} is equal to $E_R/2$. Therefore,

$$\textit{Percent modulation} = \frac{3E_A - E_R/2}{3E_A + E_R/2} \times 100$$

but since $E_A = \frac{1}{2}E_R$, then:

$$\textit{Percent modulation} = \frac{3(E_R/2) - E_R/2}{3(E_R/2) + E_R/2} \times 100$$

$$= \frac{E_R}{2E_R} \times 100 = \tfrac{1}{2} \times 100$$

$$= 50 \textit{ percent}$$

When percentage modulation is computed from directly viewing a picture on the scope, the measurements are used directly. For instance, if a picture of a modulated wave was such that E_{max} measured 1.5 inches and E_{min} measured 0.5 inch then:

$$\textit{Percent modulation} = \frac{E_{max} - E_{min}}{E_{max} + E_{min}} \times 100$$

$$= \frac{1.5 - .5}{1.5 + .5} \times 100$$

$$= \tfrac{1}{2} \times 100 = 50 \textit{ percent}$$

Certain very significant details are associated with such a-m waves. First, the modulated wave is not of constant amplitude; in fact it is anything but constant, varying definitely with the amplitude of the audio signal. The second detail is that the composition of such an a-m wave consists of the carrier frequency and a series of other frequencies representing various plus and minus combinations of the

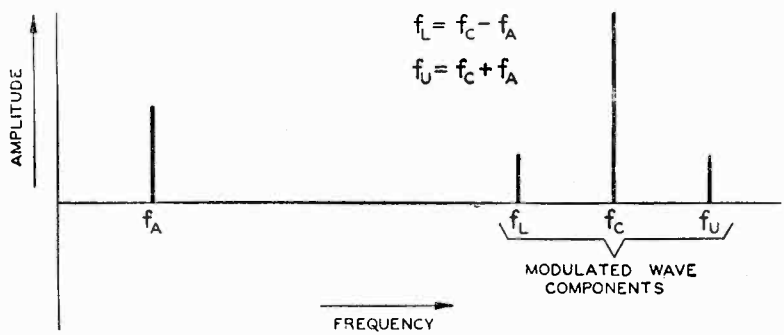

Fig. 1-6. In this spectral distribution of a 50 percent a-m wave, f_A, is the modulating signal, which is one-half the amplitude of the carrier component, f_C. The upper and lower sidebands, f_U and f_L, are the sum and difference of the modulating and carrier frequencies, their amplitudes being ½ of f_A.

carrier and the modulating frequencies. The modulating signal is considered as consisting of a number of frequencies because, when modulating a carrier with speech, the audio signal is definitely not composed of a single frequency but of a host of frequencies throughout the audio spectrum. These combinations represent the *sidebands* of the carrier. The higher the frequency of the audio signal used to modulate the carrier, the greater is the extent of the sidebands. A spectrum picture of the component waves of an a-m signal is shown in Fig. 1-6. The carrier frequency is designated as f_C and the frequency of the sinusoidal audio as f_A. The upper and lower sideband components of the modulated wave are designated as f_U and f_L respectively. If the frequency of the carrier is 1000 kc and the frequency of the audio 5 kc, the upper sideband will be 1000 + 5 or 1005 kc and the lower sideband will be 1000 — 5 or 995 kc. The modulated wave is then said to cover a band of frequencies equal to the difference in frequency between the sideband components, and in the foregoing case the bandwidth is equal to 10 kc. It is, therefore, seen that the sideband components of the modulated wave are the portions of the signal that contain the intelligence.

For 100-percent modulation, the upper and lower sideband component frequencies of a sinusoidally modulated wave have their amplitude equal to half the amplitude of the carrier. For 50-percent modulation both sideband components of the modulated wave have their amplitude equal to one-quarter of the carrier amplitude. The component waves for a 100-percent and 50-percent sinusoidally modulated carrier are shown in Figs. 1-7 and 1-8 respectively. In a.m.

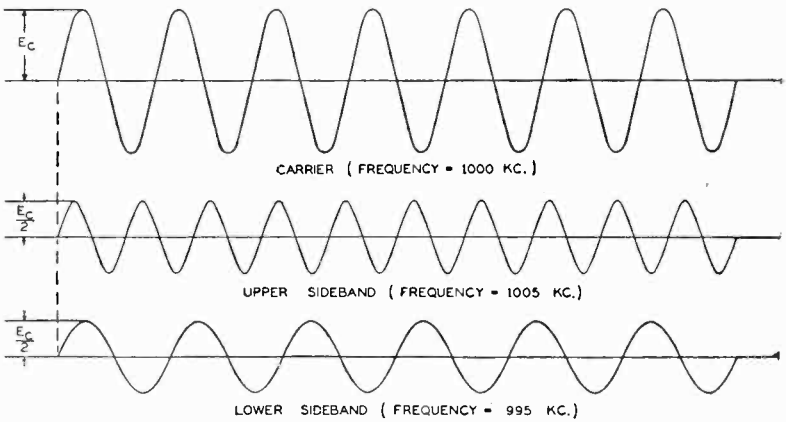

Fig. 1-7. When a carrier is 100-percent amplitude modulated, the amplitudes of the upper and lower sidebands are each one-half the amplitude of the carrier.

only two sideband components exist for each sinusoidal component of the modulating intelligence. This can be proved mathematically, but it is sufficient to say at this point that this condition does exist.

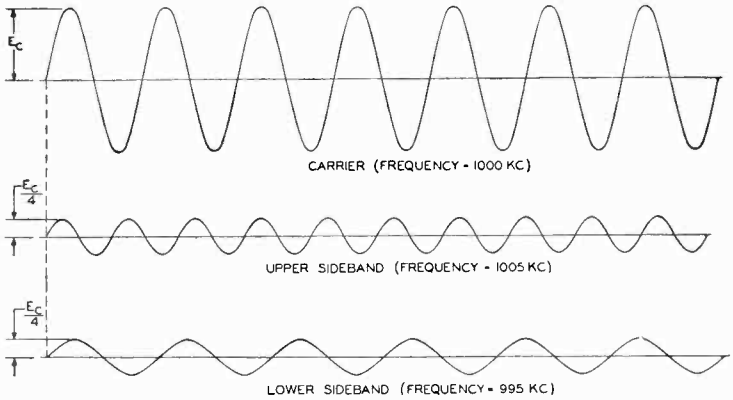

Fig. 1-8. The amplitude of the upper and lower sidebands of a 50-percent amplitude modulated carrier are one-quarter that of the carrier.

A very important situation prevails in the components of an a-m wave in regard to power. For 100 percent modulation the power in the sidebands is equal to half the power of the carrier. Since the carrier does not contain any intelligence, the power in the carrier is wasted and only that in the sidebands becomes usable upon demodulation. Consequently, of the total power involved in 100 percent a.m., only one-half is considered as utilized in reproducing the audio intelligence. That is why in a.m. 100 percent modulation is generally considered the best for maximum power transfer. In a 50 percent a-m wave, the power in the sidebands is only one-eighth of that contained in the carrier.

Though the a-m form of transmission has been used for a long time, certain disadvantages have been continually apparent. One of these is the natural and man-made static problem. This was caused by the effect of such disturbances upon the received signal. Investigation disclosed that, when such electrical disturbances combined with the electrical wave in the receiver, the result was a change in amplitude of the carrier, just as if this disturbance were an audio modulating voltage. With the conventional receiver designed so that it responded primarily to variations in amplitude of the carrier, the elimination of noise became an extremely difficult problem.

In fact, under certain conditions when the noise-to-signal ratio was high, any attempt to remove or even decrease the noise, removed or decreased the signal as well. At times the noise reached such propor-

tions that actual operation of the communication or broadcasting system was impossible. The search to alleviate the situation embraced many operations, such as selecting higher carrier frequencies, the development of noise-reducing circuits, municipal ordinances for filtering of noise-producing apparatus, the use of higher power at the transmitters, and even changing the type of modulation. This latter change was the most radical of the group because it involved a completely new type of transmission, and it really received its due consideration only recently.

Frequency and Phase Modulation

At the beginning of this chapter it was shown that, besides the amplitude, the frequency and phase of the r-f carrier also could be varied in accordance with a modulating signal. Hence, f.m. and p.m., as well as a.m., are possible. When the frequency of the carrier is varied directly, then the type of modulation is known as *direct f.m.* When the phase of the carrier is modulated, the type of modulation is known as p.m. or sometimes as indirect f.m. In the process of directly varying the frequency of the carrier, the phase is indirectly changed, and likewise, while directly varying the phase, the frequency indirectly

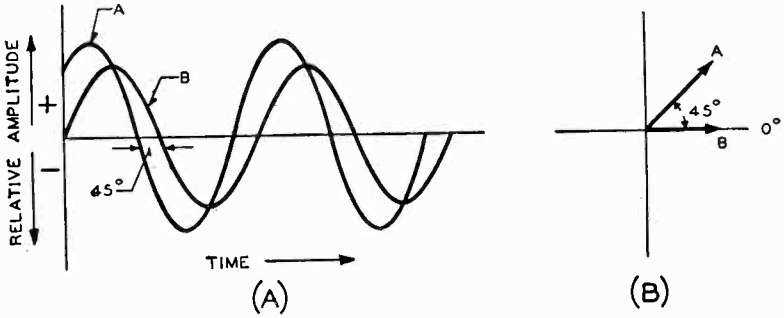

Fig. 1-9. Wave *A* has a greater amplitude than *B* and leads *B* by 45°, as indicated. The vectorial representation of these two waves is shown in (B) where the larger vector *A* is shown leading *B* by 45°.

changes. These facts will become evident in later sections of this book. Since direct f.m. and p.m. changes are related to each other, it is readily seen why they both are often referred to as f.m. in the broad sense of the term.[1] The purpose of either of these types of modulation

[1]To be more specific there are in reality three types of modulation with respect to frequency modulation. There are direct f.m., indirect f.m. (a form of p.m. such as that used by Armstrong), and direct p.m. However, direct p.m. is utilized very rarely and consequently will not be considered in detail. Many of its effects and attributes are like those for indirect f.m.

is the same. That is, they both produce similar effects in that the f-m receiver does not respond to changes in amplitude, and thus elimination of most types of noise interference associated with a.m. results. It should be remembered, however, that the modulating signal in either case directly produces changes in frequency or phase and not in amplitude.

Phase Modulation

This type of modulation is more difficult to comprehend, because in order to understand it the concept of phase has to be fully grasped. It already has been stated that the concept of phase and phase difference is generally used with reference to two or more quantities. In Fig. 1-9(A) are shown two sine curves of different amplitude, with curve *A* larger in amplitude than curve *B* and *leading* curve *B* by 45°. In other words, the two curves are 45° out of phase with each other. The relationship between these two curves is illustrated vectorially in Fig. 1-9(B). The lengths of the vectors represent the individual peak amplitudes of the curves, and the angular separation between them shows their phase relation. With such vector representation the phase relationship and the relative strength of their signals can be readily noticed.

In p.m. the phase of the signal is varying, but at any one instant of time there exists a phase difference between these two signals which can be represented vectorially. In Fig. 1-1, it was shown that the carrier alone has a certain fixed phase relation designated as θ, (the Greek letter *theta*). This fixed phase relation is often called the *relative* phase of the system. It is around this relative phase that the phase changing occurs to bring about p.m. directly; and this change is varied in accordance with the modulating signal. The methods of producing p.m. will be discussed later, but at the moment the realization that p.m. can exist is the important factor. Since it is a change in phase about the relative phase of the carrier that produces p.m., the relative phase under p.m. does not remain fixed. As the phase is no longer fixed, at any one instant of time an *instantaneous phase* has to be dealt with. The instantaneous change in the phase of the modulating signal changes the relative phase of the carrier in accordance with the modulating signal. Consequently, the variations in phase of the carrier convey the intelligence superimposed by the modulating signal. The phase is not constantly advanced in only one direction. What happens is that the phase undergoes a cyclic change. That is, it undergoes an oscillatory motion in that it advances up to a certain point and returns. The phase swing or phase excursion can undergo hundreds of degrees of change.

This phase swing or phase excursion is sometimes known as *phase deviation* and can be simply illustrated by the use of a vector diagram. Let the relative phase of some carrier be equal to 45° with respect to some initial reference point as shown in Fig. 1-10 where the

vector is represented as A. If the modulating signal is such that it alternately changes the instantaneous phase of the carrier, the phase of the carrier is in effect varying about its relative phase angle. When

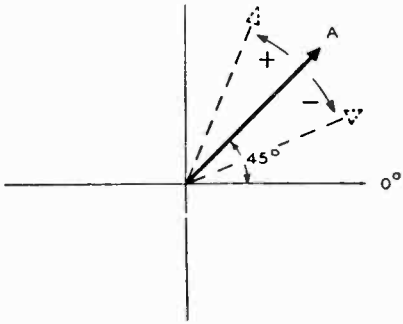

Fig. 1-10. A carrier that is phase modulated may be represented by a vector A, which has a relative phase angle of 45° and is constant in length. Phase deviation results when the vector varies above and below its relative phase angle as indicated by the dotted vectors.

the modulating signal changes the phase of the carrier at any one instant in the negative or decreasing direction as indicated in Fig. 1-10, then, after it has reached its maximum swing in this direction, it will return to its former starting position and then swing in the positive or increasing phase direction. After it has reached its maximum positive swing it will return to its starting position to complete *one cycle of phase deviation.* Although the vector diagram visually takes into account a maximum of 360°, it should be understood that a phase swing a hundred or more times as many degrees is possible. That is, the time lag between the relative phase of the carrier and that of the modulating signal is such that the vector A of Fig. 1-10 could swing in the negative or positive direction (as the case might be), so that the swing would encircle the 360-degree coordinate plane a number of times. After it had reached this maximum negative swing, it would return to its original starting position, still traversing the same number of revolutions about the axis. After reaching the starting position, it would swing in the positive direction the *same number of revolutions* as it did in the negative direction and then return to its starting point. In this manner hundreds of degrees of phase shift are encountered during only one alternation or cyclio change of phase shift. The actual value of the original reference phase angle in reality has nothing to do with phase modulating the carrier. As its name implies, it is nothing more than a reference point about which the carrier becomes phase modulated.

Vector A in Fig. 1-10 represents the unmodulated carrier. If the carrier were amplitude modulated, the *length* of the vector would change. If the carrier were frequency modulated, the original frequency would change in accordance with the modulating signal, and the vector would rotate with a varying angular velocity dependent

upon the modulating signal. In p.m. the phase varies about the relative phase of the unmodulated carrier; this movement makes the vector swing back and forth. At any one *instant* of time during the phase excursion the *equivalent instantaneous frequency* does not remain the same. If the vector rotates back and forth through a certain number of degrees, then at each instant of time during the swing the equivalent instantaneous frequency is changing. This is so because a phase change is equivalent to a change in instantaneous frequency, because every cycle of frequency change undergoes a 360-degree revolution. It is consequently seen that p.m. indirectly causes a change in the equivalent instantaneous frequency, thus indirectly causing f.m. The reverse is also true and will soon be evident.

Equivalent Frequency Change

To visualize the effect of p.m. causing an equivalent change in frequency more easily, the following analysis between two sine waves will be considered:

Imagine two sine waves *A* and *B*, each 1000 cycles and secured from two different sources. Further imagine that the currents of these two sine waves are applied to a common resistive circuit, but by some means, after having started the two waves in phase, the phase of *B* is changed by varying degrees until *B* lags *A* by a maximum of 15°. This is shown in Fig. 1-11.

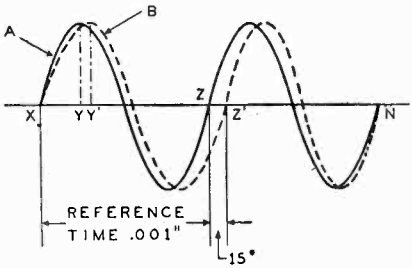

Fig. 1-11, left. Of the two 1-kc waves, *A* is the reference wave and leads *B*, as the latter has passed through a variable delay network, which lowers its frequency to 960 cycles at point *Z'*. At point *N*, the waves are again at 1 kc as they were at the start.

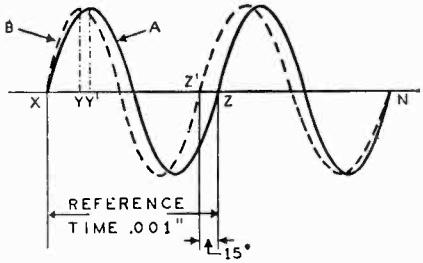

Fig. 1-12, right. The same 1-kc waves as in Fig. 1-11 are shown here, but *A*, the reference wave, lags wave *B*, as the frequency of the latter has been increased so that at point *Z'* it is 1043 cycles. Both frequency changes in these figures are effected by phase shifting.

An analysis of this drawing will reveal that the time required for the completion of a cycle of *A* is indicated upon the time axis as the reference time of 0.001 second. When we change the phase of one

wave with respect to another and one wave lags the other, the second wave moves through whatever reference points are selected after the first; therefore, we can say that wave *B* at any instant is slower in time than wave *A*. This is evident in Fig. 1-11 as is the fact that the frequency of wave *B* slows down more and more as it approaches the completion of its cycle.

Such a phenomenon may appear confusing; but, if it is recognized that phase shifting circuits are available, that wave *A* is secured from one source and wave *B* from another source, and that *B* is passed through a variable delay network, the presence of two such waves of current of varying phase applied to a resistance network can be visualized.

Since frequency is expressed in terms of time, wave *B*, which is being subjected to a shift in phase with respect to wave *A*, is at any *instant* representative of a different frequency with respect to wave *A*. Thus, if we consider wave *A* as the standard reference of time with Y as the first instantaneous reference point, we note in Fig. 1-11 that this point is the peak of the positive alternation of *A*. However, wave *B* which started concurrently with *A*, has not reached its positive peak at Y, but does so at point Y′; therefore, in terms of frequency, *B* is slower than *A*.

Later in the cycle, say at Z′, for example, where wave *B* lags wave *A* by 15°, a greater amount than at Y and Y′, wave *B* is still lower in frequency than before. The 15-degree difference is equal to 15/360 or 1/24th of the entire cycle. The time that it takes wave *B* to reach Z′ is equal to one period (or one cycle of time) plus 1/24th of a period. The period *T*, is referred to the starting frequency of 1000 cycles, and it is equal to 1/f where *f* is the starting frequency. However, at point Z′ the frequency of *B* has changed (become slower), and the new period is equal to the old period plus the additional time required to traverse the extra 1/24th of a cycle. Consequently, the total period for wave *B* at point Z′ is as follows.

$$Total\ period = T + \frac{1}{24}T = \frac{25}{24}T$$

Since the period is equal to the reciprocal of the frequency, the equivalent instantaneous frequency of wave *B* at point Z′ is

$$\frac{24}{25} \times f = \frac{24}{25} \times 1000\ cycles = 960\ cycles$$

As the waves advance the phase difference between wave *A* and wave *B* becomes less and less, hence in accordance with what was said the equivalent instantaneous frequency of *B* is increasing, until, at point *N*, the waves are in phase and the equivalent frequency of *B* is the same as that of *A*, or 1000 cycles.

With wave *A* still the reference wave, suppose that the phase of *B*

again is gradually changed with respect to A, but that B is now speeded up so that it leads wave A. This is shown in Fig. 1-12 where waves A and B, still beginning at 1000 cycles each, are in phase at X but at Y and Y' wave B leads A. If the curves are examined, it will be found that while wave A completes a cycle in 0.001 second, wave B has passed through more than one complete cycle in the same period; therefore, whatever the frequency of B, it must be higher than A. At point Z', wave B leads wave A by 15°. The equivalent instantaneous frequency of B at point Z' is figured as in Fig. 1-11. The period that it takes wave B to reach Z' is 1/24th of a cycle less than the reference period of 0.001 second. Therefore, the new period of B represented by point Z' is equal to the old period (reference period, call it T) less 1/24th of this old period. Therefore,

$$\textit{Period of wave } B \textit{ at } Z' = T - \frac{1}{24}T = \frac{23}{24}T$$

Since frequency is equal to the reciprocal of the period, the equivalent instantaneous frequency of wave B at point Z' is

$$\frac{24}{23} \times f = \frac{24}{23} \times 1000 = 1043 \textit{ cycles}$$

At N, both waves are in phase, and the frequency of B is the same as that of A.

Referring again to Figs. 1-11 and 1-12, they illustrate how, by changing the phase of a wave, which is equivalent to slowing down or speeding up the wave, it is possible to create the equivalent of an instantaneous change in frequency. It should be stressed that the greatest significance of the examples given lies in the presence of a wave wherein the frequency is raised and lowered. A standard reference wave of fixed frequency is included only to illustrate properly how phase shift is equivalent to a change in the frequency.

Briefly summing up the basic characteristics of p.m., we find that the amplitude of the unmodulated carrier and the mean carrier frequency remain fixed, but the carrier undergoes phase variations (about its relative phase angle) caused by the modulating signal. That is, in p.m. the equivalent instantaneous frequency undergoes cyclic changes about the mean carrier frequency due to the relative changes in the phase of the carrier signal. A more detailed analysis of p.m. will be discussed in chapter 3 where the circuit for a basic p-m modulator is studied.

Frequency Modulation

In discussing p.m., it was brought out that indirectly the instantaneous frequency of the carrier was also changed: a change in phase produced an equivalent change in the instantaneous frequency. In frequency modulating the carrier, it is this instantaneous frequency which

is varied directly, which in turn produces an equivalent instantaneous phase shift. That a change in the instantaneous frequency does cause this indirect change in the phase can be shown by analyzing Figs. 1-11 and 1-12 from the standpoint that it is the instantaneous frequency of wave *B* which is changed, with wave *A* remaining fixed as the reference wave. It would follow that a change in the frequency causes a change in the period, which results in a phase shift. Consequently, the converse statement that direct f.m. causes indirect p.m. is true.

It is very difficult to tell the difference between an f-m wave and a p-m wave as they appear on an oscilloscope. This is best illustrated by showing pictures of both f-m and p-m waves. Fig. 1-13 shows a p-m and an f-m wave, both modulated by audio. In both types of modulation the modulating signal, wave *A*, is exactly the same in frequency and amplitude and so are the carriers of the respective modulated signals. The f-m wave is shown at (B) and the p-m wave at (C). Two cycles of audio (represented by a sine wave) modulate both carriers as shown. The modulating audio signal is lined up with the modulated signal in order to show the effect the positive and negative half cycles of the audio signal have on the modulated waves. In both modulated waves the modulation starts at the beginning of the audio signal, points *R* and *R′*, and finishes at the end of the second cycle of the audio signal, points *Z*, *Z′*, respectively. To the left of both of these signals, the rest of the signals at (B) and (C) represents the unmodulated carrier.

In the f-m wave at (B) the *frequency* of the signal is being altered. At the positive halves of the modulating signal the frequency of the f-m wave is increased. This increase in frequency occurs between points *R* and *T* and between points *V* and *X*, with maximum frequency increase occurring at points *S* and *W* respectively. At the negative portions of the modulating signal, the modulated f-m wave is seen to decrease in frequency. This decrease occurs between points *T* and *V* and between points *X* and *Z*, with maximum frequency decrease occurring at points *U* and Y. The maximum frequency increase and decrease occur at the maximum amplitudes of the positive and negative half cycles of the audio modulating signal respectively. The frequency change as caused by directly frequency modulating a wave, as shown at (B) of Fig. 1-13, is, therefore, readily noticed. To illustrate more vividly the frequency changes of the f-m sine wave, we have included above the wave a vector diagram showing how these frequency changes occur with respect to the audio modulating signal. From this vector diagram the points of maximum and minimum frequency are readily noticed. Where the vector crosses the baseline, the frequency of the f-m wave equals that of the carrier.

Now let us examine the p-m wave, part (C) of Fig. 1-13. If this

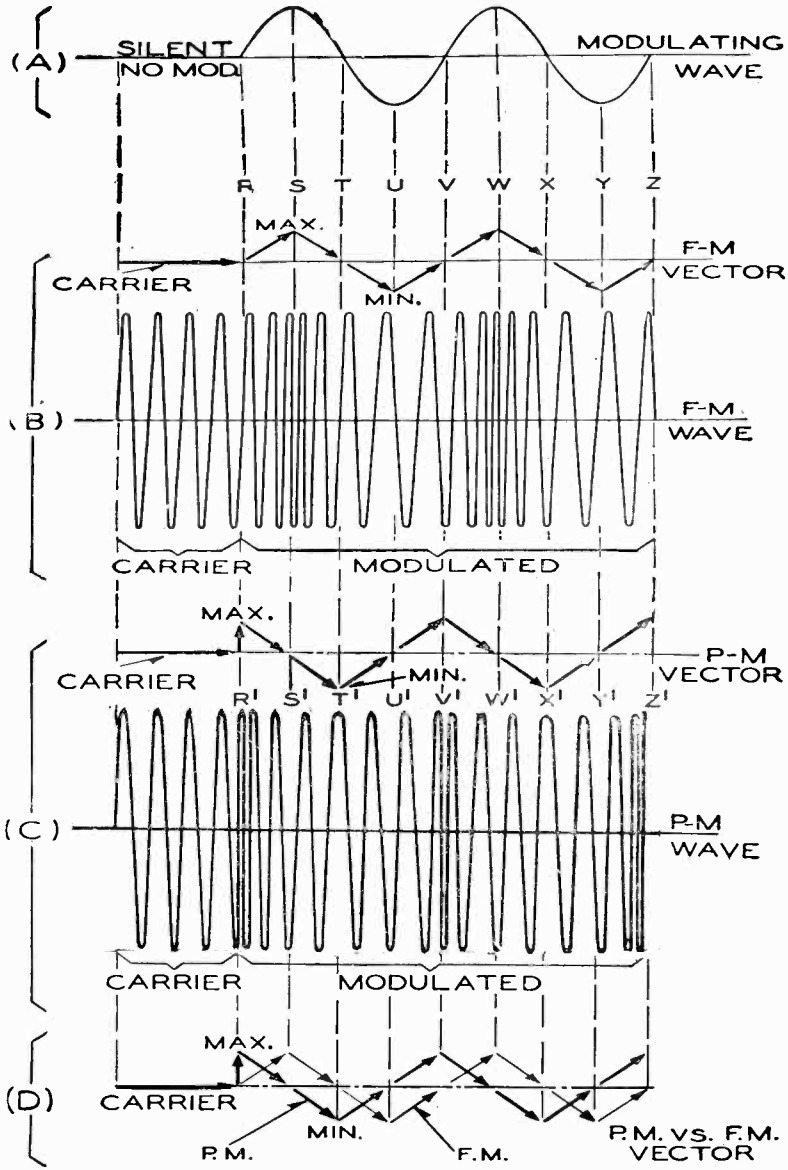

Fig. 1-13. The audio wave at *A* modulates the same carrier, shown to the left of *R* and *R'*, in such a way that the resultant wave at (*B*) is frequency modulated and at (*C*) it is phase modulated. Above each of these modulated waves is their vector representation, these being combined at (*D*) for comparison. Note especially where the frequency is increased and decreased in each modulated wave, as indicated by the respective bunching or spreading of the individual cycles.

p-m wave appeared on the scope, it would be difficult to tell whether the modulation was one of frequency or of phase. The changing of frequency of the wave which is caused by directly phase modulating the signal occurs as follows:

At the beginning of the p.m., point R', the frequency of the wave suddenly changes. In fact, at point R' the frequency is a maximum as witnessed by the close bunching of the wave shape and as indicated by the p-m vector above the wave. As we proceed away from R' toward S', the frequency decreases and at point S' it reaches the frequency of the carrier. From point S' to point T' the frequency is continually decreasing, until at point T' it has decreased to its maximum value. This has occurred, so far, with respect to the positive half of the audio signal. Compare it with that part of the f-m wave and the difference between both types of modulated waves manifests itself. From point T' to point U' of the p-m wave, the frequency starts to increase again, until at U' the frequency has reached that equal to the carrier again. From point U' to point V' the frequency starts to increase (above that of the carrier), until at point V' it has reached its maximum value, equal to that at the previous point R'. From point V' to point Z' the wave repeats itself exactly as between points R' and V'. In other words, between points R' and V' one cycle of audio modulating signal has been traversed, and the same thing occurs for both audio cycles. Similar to the f-m wave a p-m vector is drawn above the p-m wave better to illustrate the frequency changes that occur in the p-m wave. The composite picture of the p-m signal discloses that during the reversal of the audio modulating signal from the positive half cycle to the negative half cycle, the decrease in frequency is at its maximum. If this same point (T or X) of the f-m wave is examined, it will be noted that the frequency here is equal to that of the carrier. From the p-m wave at (C) and the modulating signal at (A) it is seen that, when the audio modulating signal reverses from the negative half cycle to the positive half cycle, at points V' or Z', the increase in frequency is at its maximum. If these same points of the f-m wave are examined, it will be seen that frequency is equal to that of the carrier.

One can readily understand how easy it might be to misinterpret a p-m wave as an f-m wave, or an f-m wave as a p-m wave. The drawings of the f-m wave and p-m wave are shown only for comparison purposes, and they are exaggerated to procure a better picture. That is, the amount of increase or decrease of frequency in either case for the same audio signal and carrier is really not necessarily the same.

For an over-all comparison between the f-m and p-m waves, a composite picture of both vector diagrams is drawn in part (D) of Fig. 1-13. This readily reveals that the relative changes in frequency

for an f-m and a p-m wave, for the same audio modulating signal and carrier, do not occur at the same instants of time.

Comparing f.m. with a.m., the chief contrast is that in f.m. (as in p.m.) the amplitude of the modulated wave remains constant, whereas in a.m. it varies. In f.m. the carrier frequency is varied by means of the modulating signal. It is varied in such a manner that it undergoes *frequency deviations* on either side of its center frequency. These frequency deviations, or frequency swings, are dependent upon the level of the audio modulation, which means that the loudness or amplitude of the audio modulating signal is a determining figure in the frequency swing or deviation about the center frequency. The stronger the audio signal, the greater the change in frequency, but the amplitude of the f-m wave is always constant. This is in contrast to the a-m wave, which is produced when the amplitude of the modulating signal varies the amplitude of the carrier. The *frequency* of the modulating signal in f.m. determines the number of times per second that the change or *deviation* in frequency of the carrier takes place. The higher the frequency of the audio or modulating voltage in the transmitter, the greater the number of times per second the carrier frequency changes between the limits determined by the amplitude or strength of the audio signal. This will be made clearer in chapter 2 when the analysis of different f-m wave shapes is considered.

In a.m. it was simply shown what was meant by percentage of modulation. It was also indicated that only two sidebands appear in a.m., namely the upper and lower sideband, the frequencies of which are, respectively, the carrier plus the frequency of the modulating signal and the carrier less the frequency of the modulating signal. In f.m., as well as in p.m., the percentage of modulation and the sideband characteristics are not so simple as in a.m. For instance, in f.m. if we were to refer to 100 percent modulation similar to the way percentage of modulation is understood in a.m., the frequency swing of the f-m wave would have to be such that it covered the whole of the carrier frequency on either side. We know this to be a practical impossibility, so the percentage of modulation in f.m. is defined in another way with respect to the deviation of the signal. This will be shown in the next chapter.

Numerous sidebands may appear in f.m. as compared with only one pair in a.m. These sidebands are paired equally on either side of the center frequency. The sidebands nearest this center frequency and on either side of it are equal to the frequency of the carrier plus or minus the audio modulating frequency. The sidebands of the next nearest pair are equal to the carrier frequency plus or minus twice the frequency of the modulating signal, and so on with the other pairs of sidebands. In other words, the sidebands in f.m. are removed from each other by some integer multiple of the modulating frequency, and

it is their strength which determines those that are effective in reproducing the modulated signal. As in a.m., the intelligence of the f-m signal is carried in its sidebands. The relative strength or the amount of the effective sidebands is determined by the degree of modulation. Due to the number of sideband components in an f-m wave, the required bandwidth for this type of modulation may be greatly increased as compared with a.m. This will all be evident from the more thorough discussion of f-m waves in the next chapter.

The F-M and P-M Transmitter

Many different types of so-called f-m transmitters are in use today. The two main types are those using direct methods of f.m. and those using indirect f.m., or p.m. The methods of obtaining the modulated signal differ in both of these systems. However, as far as the reception of signals is concerned, both types of transmitters are considered as equivalently transmitting f.m. This is easily understandable since it was shown how a p-m signal indirectly undergoes changes in its equivalent instantaneous frequency. The performances within either type of transmitter, from the viewpoint of desired and undesired characteristics, is quite different. That is, the basic operation of producing the correct type of modulation differs appreciably enough to warrant discussion of the various transmitters. Since a-m transmitters are most familiar, wherever possible, comparisons between the a-m and f-m systems will be included in order to correlate certain fundamental relations.

It is quite difficult to draw general block diagrams of a-m transmitters and of f-m and p-m transmitters that will represent the only types in use, because there are so many versions of such transmitters, even though the f-m and p-m types are virtually new in the field of radiobroadcasting. The block diagrams shown in this section are chosen to be indicative of the general run-of-the-mill transmitters. The components that are included are necessary for the basic operation of each type of transmitter and also for the comparison of the individual transmitters.

Fig. 1-14 shows three block diagrams of a-m, f-m, and p-m transmitters. Part (A) of Fig. 1-14 is that representing an a-m transmitter. It is the familiar type wherein the r-f section consists of an oscillator feeding into a buffer, which in turn feeds into a system of intermediate power amplifiers and/or multipliers which in turn feed into the final power amplifier stage. The audio system consists of the mike and speech amplifier which feeds into the modulator system. For high level (plate or grid modulation) a-m transmission, the output of the modulator is usually fed into the final power amplifier stage, as indicated by the solid line leading into the last stage, whereas for low level a-m transmission the output of the modulator is fed into some

intermediate amplifier stage as shown by the dashed lines. The modulating power needed in either type of a-m transmission is far in excess of that required for modulation either in f.m. or p.m.

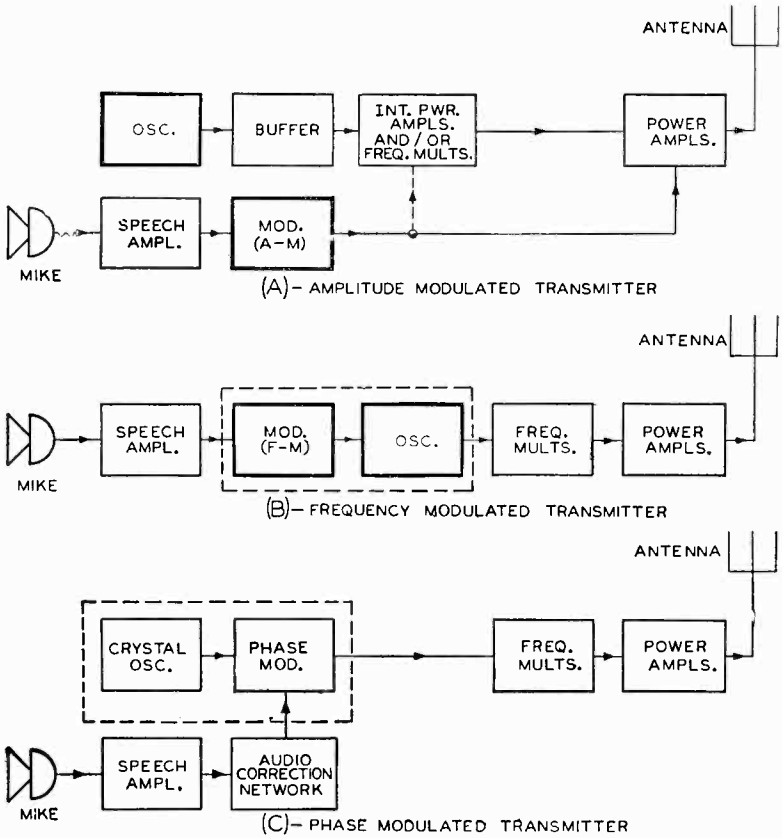

Fig. 1-14. Block diagrams of a-m, f-m, and p-m transmitters are shown in (A), (B), and (C) respectively.

Parts (B) and (C) of Fig. 1-14 show the block diagrams for the f-m and p-m transmitters, respectively. If the block diagrams of the three different types of transmitters are examined it will be noticed that there is not much difference as far as their r-f sections are concerned. All three require oscillators, intermediate stages usually consisting of frequency multipliers or amplifiers, and the final power amplifier stage. The greatest difference among them would appear to be in the method of modulating the carrier. It must be remembered, however, that we are looking at the block diagram views of the different trans-

mitters and are not really considering their internal structures. The r-f sections up to the final power amplifier do differ appreciably as far as their construction is concerned. In most a-m transmitters (especially of the high level type), the r-f tubes used are of the power variety, whereas in f-m and p-m transmitters, they can be (and often are) of the receiving tube type. Consequently, in viewing block diagrams it should be understood that as far as similarities exist, they exist in the functioning of the different stages and not necessarily in the methods of performing these functions.

The primary difference between the operation of the f-m and p-m transmitters lies in the methods of producing the modulation. In the f-m transmitter, the output of the speech amplifier is usually fed directly into the modulator stage. The modulator stage injects a variable reactance into the oscillator stage changing its frequency in accordance with the varying reactance. The output signal from the oscillator is thus frequency modulated. It is sent through a system of frequency multipliers in order to obtain the correct deviation and frequency output.

In the p-m transmitters (indirect f-m), the audio signal is fed into some type of so-called audio correction network before it is fed to the phase modulator. This audio correction network makes the p.m. that occurs directly proportional to f.m. The phase modulator works in conjunction with a crystal oscillator so that, when an audio signal is applied to the microphone and, hence, to the modulator, the phase of the crystal oscillator signal is varied in accordance with the audio modulating signal. The output from this oscillator-modulator network is then fed into a series of multiplier stages. There are numerous types of indirect f-m transmitters which utilize different methods of phase shift, and they are discussed in detail in chapter 4.

The frequency multipliers used in a-m transmitters are primarily intended to increase the fundamental frequency[2] put out by the oscillator. The oscillator itself does not produce the transmitted frequency, because it is more stable at lower frequencies than at higher frequencies. Since in f-m and p-m transmitters the final transmitted frequencies are in the 88–108 mc range, this fact becomes even more important when considering them. The frequency multipliers used in f.m. and p.m. are employed not only to increase the fundamental frequency put out by the oscillator but *also* to increase the frequency deviation (or phase shift). This will be clarified later in this book.

In all three types of transmitters the final power output stages are chiefly used to increase the power of the modulated signal before transmitting it. In the high level type of a.m., as mentioned previously, this last stage is modulated, but in f.m. and p.m. it is not. This last

[2]See chapter 3 for an explanation of frequency multipliers.

stage in all cases has to be properly matched to the antenna for the maximum transfer of energy.

The antennas of the f-m and p-m system are important in that they have to be directional. As the propagation of energy from f-m transmitters is at the higher frequencies (it is in the 100-mc region since the frequency allocations have been changed from the old band), then the special effects of the different layers of the atmosphere have to be taken into account. The erection of f-m antennas[3] is such that their height and the type of radiators used are very important problems. That is, the antenna should be as high as possible. Likewise, the radiators have to be in certain positions in order to propagate the energy in the correct direction. This will be discussed in greater detail in chapter 5.

Relative Factors in the Transmission of F-M Signals

Until very recently the frequency band of f.m.[4] was between 42 and 50 mc. This band covered only 8 mc and, naturally, the allotment of the number of stations per given area was not many. The relatively increasing importance of this type of modulation led the Federal Communications Commission (FCC) to allot a new band in the frequency spectrum to f.m. This new band, in effect since 1946, is between 88 and 108 mc. (The top two megacycles of this band are reserved for facsimile.) These new frequencies, as well as the old band, are in the so-called v-h-f region (very high frequency), and transmission at these frequencies presents a different problem from transmission at the frequencies of the a-m broadcast band.

Long before f.m. came into use, high-fidelity broadcasting was almost always desired. From 550 kc to 1600 kc a-m broadcast stations are separated by 10 kc. No two stations on adjacent channels occupy the same service area, unless their transmitted power is quite weak. Modulation frequencies as high as 7.5 kc can now be used. An a-m station can use frequencies higher than 7.5 kc provided its transmitted signal does not interfere with any other station. However, not many stations operate even as high as 7.5 kc and few operate higher, any system that can *always* transmit a signal modulated to 15 kc with minimum distortion will be the best high-fidelity system.

Frequency modulation properly used achieves such a system. By transmitting in the v-h-f region, the separation, or bandwidth, between stations can be greater than that usually found in the a-m broadcast

---

[3]When f-m antennas are mentioned they shall be understood to include those used for both the direct f-m and indirect f-m (p-m) form of transmission.

[4]In most cases when the term f.m. is used without specifying whether direct or indirect f.m. (or p.m.) is meant, it encompasses both types.

band. In fact, the bandwidth, or separation, between channels in f.m. is a minimum of 200 kc. It must be realized that in the 100-mc region 200 kc is but a small fraction of the operating frequency, and, consequently, such a large bandwidth can be used. Also, this bandwidth does not mean exactly the same thing as the bandwidth in a.m.

In f.m. we have to deal with the deviation or swing of the f-m wave with respect to the modulating audio signal. For the so-called 100 percent modulation in f.m., this deviation swings 75 kc on either side of the carrier frequency. To this 75-kc deviation the FCC has added 25 kc as a "guard band" on either side of the swing, to bring the bandwidth to 100 kc on either side of the carrier, or a total of 200 kc. This will be discussed in greater detail in the following chapter. Thus, with the possibility of being able to modulate with frequencies as high as 15 kc with minimum distortion, the f-m system is considered as true high fidelity.

Since f.m. works in the v-h-f region, its transmitting range, compared with that for the a-m broadcast band, is smaller. Thus, the f-m station does not cover a very wide area and, consequently, interference between f-m stations is greatly reduced from what it is for a.m., which covers a much greater area. The primary differences between the propagation of a-m and f-m signals lies in the difference in propagation of signals in the medium-frequency region (m-f) and in the very high frequency region. Propagation of signals of very short wave length and propagation of much longer waves differ a great deal. For instance, the longer radio waves may follow the curvature of the earth, but very short waves can travel only in a straight directed path as does a beam of light. The fact that very short waves travel in straight lines explains why the f-m transmitting antenna has to be appreciably higher for the proper transmission of signals.

It should be understood that good reception and high fidelity can be obtained either in a.m. or f.m. when using the v-h-f region. However, there are certain disadvantages to using a.m. rather than f.m. in this region, as well as in most other regions. One of the principal drawbacks of a-m broadcasting is that a-m signals are readily subjected to noise interferences. Since the a-m signal is varying in amplitude, and since most static and noise interferences vary the amplitude of a signal, it is readily understandable that a-m waves will be affected by such interference.

The F-M Receiver

The belief is widespread that a receiver for the reception of f-m waves is in many respects like a receiver intended for the reception of a-m waves. For a comparison between the a-m and f-m superheterodynes generally in use today, three fundamental types are

illustrated in Fig. 1-15 by means of block diagrams. In (A) of Fig. 1-15 the block diagram of the conventional a-m receiver is shown, while in (B) and (C) appear block diagrams for the different f-m receivers in use today. As far as the functional identity of these receivers is concerned, the only difference lies in their detector circuits. The a-m receiver, part (A) of Fig. 1-15, employs a conventional diode

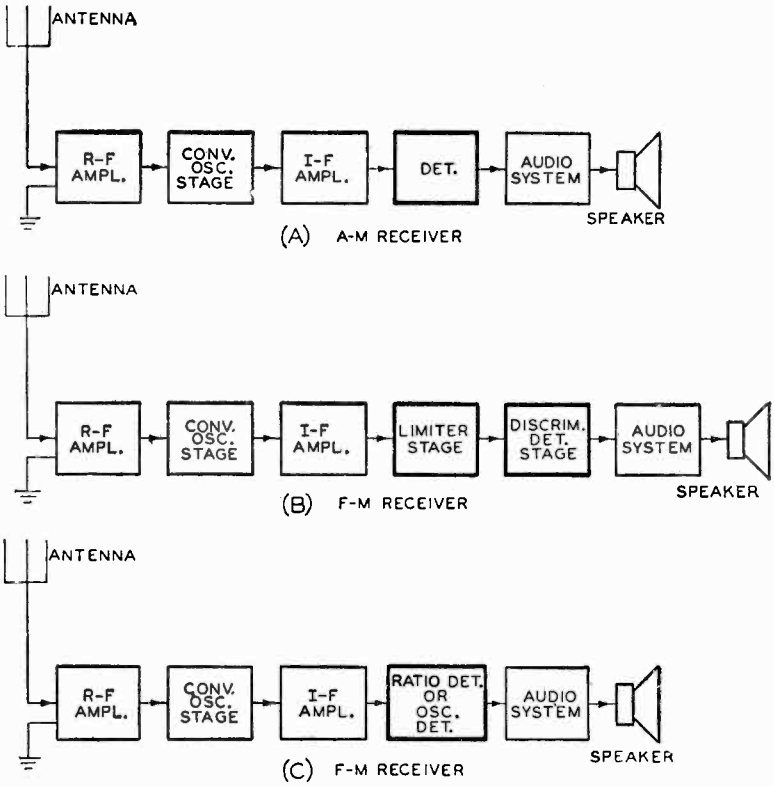

Fig. 1-15. Block diagrams of superheterodyne circuits for the reception of a-m signals in (A) and f-m signals in (B) and (C). The difference in these receivers lies in their detector circuits.

detector circuit wherein the envelope of the modulated signal is detected. In the f-m diagram of part (B), a limiter stage is used in conjunction with a discriminator detector stage. This type of circuit was the only one commercially used from the beginning of f-m broadcasting until 1946. In 1946 two new types of detector circuits found their way into f-m sets. The block diagram of the f-m receiver employing these two types of detectors appears in part (C) of Fig. 1-15.

This latter type of f-m receiver does not employ any limiter circuit at all, because all the limiting action is accomplished within the detector. Of these single-stage detectors, one is known as the ratio detector, and the other, using the principles of the locked-in oscillator, as the oscillator detector. The former type is used in more radio receivers than the latter. An analysis of these three different f-m detectors is discussed in greater detail in chapter 7.

One of the greatest differences between the a-m and f-m receivers lies in the design of their i-f circuits. The i-f circuits do not look any different so far as the block diagrams are concerned, but their physical design differs appreciably. This difference in design is due to the band-pass characteristics and the intermediate frequencies involved. The i-f bandwidth in a.m. is approximately equal to 15 kc. This is in order to pass the normal maximum of 7.5 kc for the sidebands on either side of the carrier. The intermediate frequencies involved in a.m. operate at a peak frequency from 175 kc to about 465 kc with the usual bandwidth equal to 15 kc. In f.m. the bandwidth design is approximately equal to a minimum of 200 kc, as previously mentioned; and the i-f peak frequencies are anywhere from about 4 mc to 11 mc. When the old f-m band of 42-50 mc was in use, the i-f peak frequency was usually 4.3 mc. With the new f-m band of 88 to 108 mc now in use, the i-f peak frequency commonly employed is either 8.3 mc or 10.7 mc. There are indications that the radio industry will standardize the i-f peak frequency for this new f-m band. It is believed that the standardized intermediate frequencies will be about 10.7 mc. Consequently, it can be realized how much the design of the i-f transformers for a.m. and f.m. differ from each other.

Although in block form they may appear similar to those of a-m receivers, the r-f and oscillator sections of the f-m receiver are designed to work with frequencies in the 100-mc region and, therefore, require special attention. The f-m oscillator coils found in many receivers consist of only one turn, or even half a turn, of wire in order to obtain the necessary small amount of inductance required to produce the necessary oscillator frequency. As an indication of how critical the design is at these high frequencies, it is wise to mention at this moment that some inductances of certain sections of f-m receivers are permeability tuned, and they form the necessary tuned circuit in conjunction with their own distributed capacitance.

The audio section of the f-m receivers presents an interesting problem. To start with it should be mentioned that, in schematic form, it does not appear much different from that used in a-m receivers. The amount of difference varies in accordance with what the original designer had in mind. In a.m. we know that the normal maximum audio frequency that can be transmitted is according to FCC rulings for a-m stations. Consequently, for high-fidelity work in the a-m broadcast

band, the design of the audio section should provide for a good response to about 7.5 kc. Such an audio frequency response is not hard to obtain since the usual maximum frequency that can be passed is only 7.5 kc. In f.m., the situation is very different. Since it is always possible to transmit f-m signals with modulating frequencies as high as 15 kc, then the audio system of f-m sets should be designed to pass this range of frequencies in order to obtain the available high fidelity. The essence of high fidelity can therefore be realized with f-m sets. The audio frequencies usually involved in speech very seldom exceed 6 kc, but those involved in music have a range well up to 15 kc. Consequently, for the full reproduction of music the audio section of f-m sets should be so designed that it has a response characteristic up to 15 kc. This is quite a difference from a.m. where the usual maximum of only 7.5-kc audio modulation can be transmitted.

To achieve the reception of high-fidelity f.m., the speaker of the receiver should be designed to have a good audio response characteristic. Such speakers are commercially available, but economically speaking they present a problem for the production of low-cost f-m receivers. Many speakers will reproduce frequencies up to about 15 kc, but their response characteristics are anything but flat. A speaker that has a fairly flat response characteristic up to about 15 kc costs a few hundred dollars. Perhaps in time high-fidelity speakers may be mass produced and the individual cost of each speaker cut down to make them economically available for f-m sets.

The aerial or antenna problem in f-m receivers is not quite so complicated as has been maintained. When a-m sets were in their childhood, receiving aerials presented quite a problem for the proper reception of signals. Today the situation is so different that indoor loop antennas are used in most a-m sets. In a.m. the antenna problem is now considered a very simple matter. In the few years that f.m. has been in use, the problem of antenna construction has been greatly minimized. In fact, f-m receivers that contain *indoor antennas* are already on the market. It should be remembered that for the proper reception of weak signals, especially with a receiver which requires a high input signal for correct operation, outdoor aerials are considered the best to use. However, when beset with limitations as to the use of a suitable outdoor antenna, an indoor antenna will suffice. In either event, the design of the antenna has to take into account the type of signal and the direction of approach. The antenna problem in f.m. is not so complicated as that of a.m., with respect to noise and other types of interference, as the f-m receiver discriminates against these interferences.

QUESTIONS

CHAPTER 1

1- 1. What is meant by modulation of a carrier wave?

1- 2. What are the three principal types of modulation?

1- 3. What is the amplitude relationship between the audio modulating signal and that of the carrier for a 100-percent a-m wave? For a 50-percent a-m wave?

1- 4. *a.* When will an a-m wave become overmodulated?

b. Why does such an overmodulated wave cause distortion upon reproduction?

1- 5. *a.* If an audio modulating signal has a peak-to-peak amplitude of 60 volts and if the peak-to-peak amplitude of an r-f carrier is 80 volts, what degree (percentage) of a.m. will result?

b. If an a-m wave that appears on an oscilloscope measures 2.4 inches peak-to-peak and a minimum of 1.2 inches between troughs, what is the degree (percentage) of a.m. of the wave?

1- 6. *a.* How many sidebands exist in an a-m wave?

b. If the frequency of the r-f carrier is 1.5 mc and that of the audio modulating signal 2 kc, what are the frequencies of the sidebands in an a-m wave?

1- 7. Compare the amplitude and also the power of the sidebands with that of the carrier of a 100-percent a-m wave. Of a 50-percent a-m wave.

1- 8. Describe one of the principal disadvantages regarding the a-m form of transmission.

1- 9. Define direct f.m. Indirect f.m. or p.m.

1-10. How are direct f.m. and p.m. related to each other?

1-11. *a.* What is meant by phase deviation?

b. What other names are given to phase deviation?

1-12. Explain how one cycle of phase deviation can undergo a change in hundreds of degrees.

1-13. Does the equivalent instantaneous frequency remain the same during a phase swing? Why?

1-14. *a.* Referring to Fig. 1-11 on page 14 and assuming that the frequency of each of the two sine curves is equal to 2000 cycles and that between points Z and Z' wave B *lags* wave A by 40 degrees, what is the equivalent frequency of wave B at point Z'

b. Refer to Fig. 1-12 and assume that the frequency of each of the two sine curves is also equal to 2000 cycles but that wave *B leads* wave *A* by 40 degrees between points *Z'* and *Z*, what is the equivalent frequency of wave *B* at point *Z'*?

1-15. In p.m. what characteristics of the carrier remain fixed?

1-16. In what manner does the frequency of a direct f-m wave change during one cycle of a sine-wave modulating signal due to the changing amplitude of the modulating signal? (Assume that the positive amplitude of the modulating signal increases the frequency of the carrier.)

1-17. In what manner does the frequency of a p-m wave (indirect f.m.) change during one cycle of audio modulating signal due to the changing amplitude of the modulating signal? (Assume that the positive amplitude of the modulating signal increases the frequency of the carrier.)

1-18. *a.* What determines the amount of frequency deviation of an f-m signal?

b. What determines the rate at which this deviation takes place?

c. Are f-m signals limited to only two sidebands as an a-m wave?

1-19. Is the (modulating) audio power needed for f-m transmission about the same, greater, or smaller than that needed in a.m., assuming the same carrier power in each transmitter?

1-20. What two functions do frequency multipliers have when employed in f-m and p-m transmitters?

1-21. *a.* Compare the usual maximum audio frequency that can be transmitted in the a-m band (between 550 and 1600 kc) with that possible in f-m broadcasting.

b. Why is there a limitation on the amount of audio modulating frequency used in a.m.?

1-22. *a.* What is the minimum frequency separation between f-m channels?

b. How was this separation originally determined?

1-23. In schematic appearance, what part of the f-m receiver is very different from the general a-m receiver?

1-24. Name the three principal types of detector systems that are used in f-m receivers.

1-25. Compare the intermediate frequencies used in a-m receivers with those used in f-m receivers. Which i.f. is most common in f-m receivers of today?

1-26. For maximum possible high-fidelity reception, assuming undistorted output, what frequency should the audio system of f-m receivers be designed to pass?

CHAPTER 2

FREQUENCY MODULATION

We have discussed in general the primary differences between a.m., f.m., and p.m. In this respect we have touched on the analysis of the various modulated wave shapes and how they differ from each other. As an introduction f-m transmitters and receivers were analyzed with regard to the conventional a-m transmitters and receivers. Before going into a discussion of the different methods of producing f-m waves and how the different transmitters operate, it will be well to have a more thorough understanding of the relative features of frequency-modulated signals.

It is the purpose of this chapter further to acquaint the reader with the more detailed aspects of such related f-m topics as bandwidth, sidebands, percentage of modulation, modulation index, interference, and the like. A broader understanding of the fundamental action of f-m signals is necessary in order to comprehend easily the chapters to follow.

The Basic F-M Wave

In the first chapter we mentioned the frequency deviation of an f-m signal and also how the amplitude and frequency of the audio modulating signal changed the degree of deviation and the repetition of this deviation. To understand the effects that a changing modulating signal has on a carrier being frequency modulated, it is best to use illustrative examples. The basic f-m wave usually has the bunching up of its cycles at the positive half of the audio modulating signal and the spreading of its waveform in the negative half of the audio modulating signal. It is this bunching and spreading of the f-m waveform that undergoes changes with respect to variations in the amplitude and frequency of the audio modulating signal.

Fig. 2-1 shows two f-m signals modulated by the same audio frequency in each case but with the amplitude of the modulating signals different from each other. Parts (A) and (B) represent sinusoidal audio signals that are used to frequency modulate a carrier wave.

Both are of the same frequency, but signal *B* is of a louder tone than signal *A* as witnessed by the differences in amplitude. Wave *C* represents that f-m wave modulated by the audio at (A), and wave *D* represents that f-m wave modulated by the audio at (B). Comparing the two f-m waves at (C) and (D), it is at once evident that an increase in loudness or audio level causes a greater frequency change (that is, deviation) of the modulated signals. In other words, the frequency deviation of wave *D* is greater than that of wave *C*. Upon further examination of these modulated waves, it will be noticed that when the modulating signal is positive (above its axis) then the frequency of the f-m wave is increased. This is indicated by a bunching up of the wave at this point. Likewise when the audio signal is negative (below its axis) the frequency of the f-m signal is decreased.

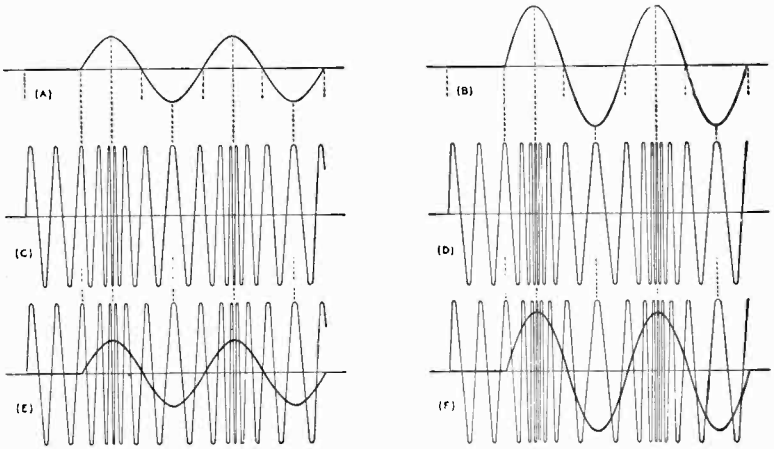

Fig. 2-1. The modulating waves in (A) and (B) are the same frequency, but the amplitude of (A) is less than that of (B). The louder signal (B) causes a greater frequency change in the modulated signal at (D), shown by the increased bunching and spreading, than does the smaller amplitude of (A) on the modulated signal at (C). In (E) and (F) the modulating waves are superimposed on their respective modulated waves.

This is indicated by a spreading of the wave at this point. This was all indicated in Fig. 1-13 of chapter 1, but it is even more clearly evident in parts (E) and (F) of Fig. 2-1, wherein the audio modulating signals *A* and *B* are respectively superimposed upon the f-m waves *C* and *D*.

To show how the frequency of the audio modulating signal determines the number of times a second that the deviation of the carrier takes place, let us refer to Fig. 2-2. The two audio signals *A* and *B* are of the same amplitude but different in frequency. For the same period of time, wave *A* undergoes two cycles of frequency change and

wave B undergoes three cycles. This time equality is indicated by time T_1 equaling time T_2. Part (C) of Fig. 2-2 represents the f-m wave that is modulated with the audio at (A) and part (D) represents the f-m wave that is modulated with the audio at (B). If these two f-m waves are examined, it will be seen that for the same period of time wave D undergoes a greater number of cycles of frequency changes than wave C. That is, the frequency deviation, which is determined by the amplitude of the modulating signal, changes through its full range more often in wave D than in wave C. This is due to the fact, as stated before, that the modulating signal of (B) is higher in frequency than that of (A).

Parts (E) and (F) of Fig. 2-2 show the audio signals superimposed upon the modulated signals in order to illustrate clearly that for the

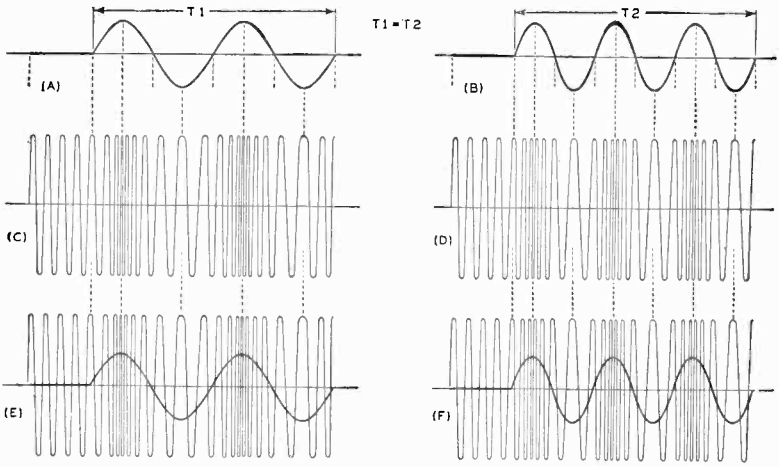

Fig. 2-2. The frequency of the modulating wave of (A) is less than that of (B), the time intervals T_1 and T_2 being equal. Notice the two groups of frequency changes in the modulated wave at (C) and the three in the wave at (D), which occur in the same period of time. The modulating waves are superimposed on their respective modulated carriers in (E) and (F).

same period of time, the greater the frequency of the modulating signal, the greater the rate of *change* in f-m deviation. The amplitudes of both audio signals are the same, and thus the amount of carrier frequency change or deviation is the same in each case. This is easily seen by comparing the points of maximum and minimum frequency in both f-m waves and it will be seen that the points of closest bunching, as well as the points of greatest spacing, in each wave are equal to each other. However, since the frequencies of the audio modulating signals differ, with that at (B) greater than that at

(A), the number of times per second that the cyclic frequency change takes place is different. The change of the modulated wave at (D) is seen to be more frequent than that at (C), indicating that the higher the audio frequency, for the same amplitude, the greater the number of times per second the deviation changes. Although technically accurate, the wave forms in both Fig. 2-1 and Fig. 2-2 have been exaggerated to provide a more vivid illustration.

F-M Bandwidth and Sidebands

It was noted in chapter 1 that in the a-m form of transmission the modulated wave (when at or under 100 percent modulation) consisted of three component waves. These three components were the carrier frequency and the upper and lower sidebands respectively. In the f-m form of transmission the modulated wave consists of the carrier frequency and *numerous* sideband components. In a.m. the frequency of the audio modulating signal determines the bandwidth. Since 7500 cycles-per-second is the normal maximum amount of audio modulating frequency that can be used, the usual maximum bandwidth in the a-m broadcast band is considered to be 15 kilocycles.[1] In f.m. the amplitude of the audio modulating signal is the chief factor in determining the amount of f-m bandwidth. This was indicated in Fig. 2-1, where the difference in audio amplitude produced a different frequency change or deviation. This deviation may shift the frequency of the carrier by 50 kc, or even higher, according to the amplitude of the modulating signal. Since the allowable bandwith in f.m. can be greater than that of the audio frequency spectrum, there is really no limit to the amount of audio frequencies that can be passed. Hence, in f.m. high fidelity can be easily attained. In determining the amount of deviation of the carrier, the amplitude of the modulating signal determines the effective bandwidth and also the number of effective f-m sidebands.

The extent of the bandwidth, being dependent upon the variable factor of audio amplitude, is also a variable factor itself. The deviation in f.m. can vary by quite a large amount, and to compensate for the maximum amount of carrier frequency swing that can occur the FCC has established 75 kc as the peak deviation (that is, the maximum deviation on either side of the carrier). To this 75-kc deviation the FCC has added 25-kc guard bands making a total of 100 kc on either side of the carrier. The "guard bands" are included to insure against interaction between any two adjacent stations. For instance, without

[1]According to the FCC, modulation above 7.5 kc is permissible. However, if a station that modulates above 7.5 kc interferes with reception of signals from other stations, the interfering station has to install equipment or make adjustments to reduce this interference so that it is not objectionable. Thus, in a.m., 7.5 kc is considered as the normal maximum audio modulating frequency.

guard bands, if a station were somewhat off carrier frequency the shift might cause the bandwidth of the station to overlap that of the adjacent one. Consequently, the separation between adjacent channels in the f-m broadcast band is 200 kc (100 kc on either side of the carrier). This 200-kc adjacent channel separation is for f-m stations assigned to different coverage areas. Adjacent channel stations that service the same area are separated by a minimum of 400 kc. The reason for this is primarily that the signals of stations covering the same area (as the New York City Metropolitan area) are quite strong, and there is probability of interference if there is any overlapping of the station bandwidths.

In a.m. the bandwidth is a much larger fraction of the carrier frequency than it is in f.m. For example, considering 1000 kc as the mean carrier frequency in the a-m band, the fraction of the 15-kc a-m bandwidth to this mean carrier frequency is: 15 kc/1000 kc = 0.015 or 1.5 percent of the carrier frequency. Considering the mean carrier frequency of the new f-m band as being 100 mc, the fraction of the f-m bandwidth (150 kc or 0.150 mc total) to this carrier frequency is 0.150/ 100 = 0.0015 or 0.15 of 1 percent. Examination of these relative percentages reveals why such a comparatively large bandwidth in f.m. is feasible, especially when it is such a small part of the carrier frequency.

The preceding chapter stated that the a-m wave was a complex signal in that it contained various frequency components. The a-m wave and its component parts for 100 percent and 50 percent modulation were illustrated in Figs. 1-7 and 1-8, respectively. Besides the carrier, the other component parts of these modulated waves are known as the sidebands, and only two such sidebands (upper and lower) exist for each type of a.m. illustrated for sinusoidal modulation. In f.m. the situation is completely different. The f-m wave is also a complex wave, but it contains numerous sideband components distributed equally on either side of the carrier frequency. The intelligence is contained in these f-m sidebands as it is in a.m. with the difference that in f.m. the intelligence is distributed over a very wide spectrum of the sideband components. The amplitude of these sideband components is not the same, as in a.m., but varies considerably. To prove that numerous sideband components of various amplitudes may exist in an f-m signal for a single modulating frequency, higher mathematics would have to be used; this is beyond the scope of this book. Although numerous sideband components do exist, the relative amplitudes of each determines whether or not they will be useful in the reproduction of the intelligence conveyed in them. In other words, the amplitude of a certain sideband component may be so small that it has negligible effect upon demodulation. This will become clearer if a spectral picture of the components of an f-m signal is analyzed.

Two spectral distributions of f-m waves are shown in Fig. 2-3. In both parts of this figure, the frequency of the unmodulated carrier is

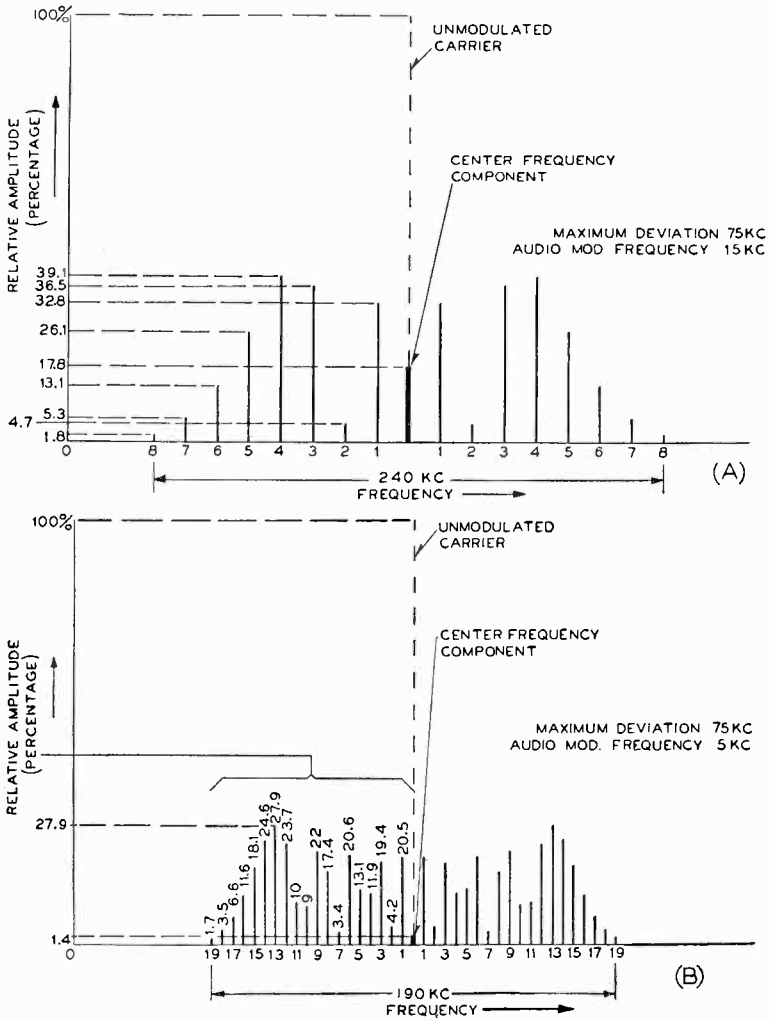

Fig. 2-3. Two spectral distributions of f-m waves. The frequency of the modulating signal in (A) is 15 kc and in (B) it is 5 kc. Note that the relative amplitudes of the sidebands are often greater than the amplitude of the center frequency component.

the same. The peak deviation involved is the same in either case, being 75 kc on either side of the carrier, even though the frequencies of the audio modulating signals differ. Since the deviation is the same in both cases, the amplitude of the audio is also the same. In part (A) of Fig. 2-3 the audio frequency involved is 15 kc, which is considered

the maximum modulating frequency for high-fidelity f.m. The true amount of sideband components that exist are numerous, but the amplitudes of those past the 8th sideband are so small as to be ineffective in reproducing the sideband intelligence. In reality, therefore, there exist eight *effective* sideband pairs in the spectrum of part (A). Note that the amplitudes of the sideband pairs have no immediately apparent special order of increasing or decreasing in size. In fact, the amplitude of some of the sidebands may be greater than the center frequency component, which is the case for both spectra of Fig. 2-3. This contrasts with a.m. where the center frequency component is always greater in amplitude than its sidebands and equal to the amplitude of the unmodulated carrier. That is one of the reasons why f.m. is considered better than a.m. This will be expanded later.

As previously mentioned, the sidebands in f.m. are equally distributed on either side of the center frequency component. (The center frequency component is at the same frequency as the unmodulated carrier but always smaller in magnitude). This frequency distribution of sidebands is as follows:

1st sideband pair = center frequency $\pm$ 1 $\times$ audio frequency
2d sideband pair = center frequency $\pm$ 2 $\times$ audio frequency
3d sideband pair = center frequency $\pm$ 3 $\times$ audio frequency
4th sideband pair = center frequency $\pm$ 4 $\times$ audio frequency

and so on for as many effective sidebands as there are. Consequently, the first pair of sidebands in part (A) of Fig. 2-3 is found 15 kc on either side of the center frequency component. The second pair is found 2 $\times$ 15 kc or 30 kc on either side of the center frequency, the third pair 3 $\times$ 15 kc or 45 kc on either side, and so on. Therefore, the total distribution of the eight effective sidebands on one side of the center frequency in part (A) is equal to 8 $\times$ 15 or 120 kc. This means that the total effective bandwidth is equal to 240 kc.

Part (B) of Fig. 2-3 illustrates a similar situation where the modulating frequency is 5 kc. However, the number of effective sideband pairs in this case is greater and equal to 19. Since the sideband frequency distribution on either side of the center frequency is an integer multiple of the audio frequency, the effective bandwidth is 19 $\times$ 5 or 95 kc on one side of the center frequency. This means that the total effective bandwidth in part (B) is only 2 $\times$ 95 kc or 190 kc. This is 50 kc less than the bandwidth of the spectral distribution of part (A) of Fig. 2-3.

To indicate the relative amplitudes of the sidebands, they are shown to be some percentage of the amplitude of the unmodulated carrier, which is considered to be at 100 percent for maximum amplitude. The unmodulated carrier is drawn in dashed lines for the sake of clarity, but it really does not exist in the spectral distribution. In part (A) of

Fig. 2-3, the center frequency component is seen to be only 17.8 percent of the unmodulated carrier. The first sideband pair is greater in magnitude than the center frequency, and it is 32.8 percent of the amplitude of the unmodulated carrier. The second sideband pair is only 4.66 percent of the unmodulated carrier. The amplitudes of the other sideband components vary accordingly, and their percentages are illustrated to the left of the spectrum.[2] In part (B) of Fig. 2-3, the relative percentage amplitudes are also illustrated to the left of the frequency spectrum.

Now that we have a fair understanding of f-m spectrum distribution let us study the two spectra of Fig. 2-3 for comparison and try to formulate a general rule about spectrum distribution in f.m. in regard to deviation, bandwidth, and audio modulating frequency.

With the frequency deviation kept constant, the number of effective sidebands increases with a decrease in audio modulating frequency. However, the effective bandwidth does not increase with the increase in sidebands but rather decreases. This is evident from the two spectra of Fig. 2-3. In both cases the deviation is the same, being 75 kc. In part (B) the audio frequency is 5 kc, and the number of effective sideband pairs 19, but the effective bandwidth is only 190 kc. If the audio frequency is 3120 cycles, the number of effective sideband pairs would be 29, but the effective bandwidth would only be 181 kc.

Consequently, a general rule can be formed regarding f-m spectrum distribution. With the frequency deviation assumed constant, the greatest bandwidth (spectrum distribution) is attained when the audio modulating frequency is at its highest value. As this audio frequency is lowered (keeping the deviation still constant), the effective bandwidth decreases, but the number of effective sidebands increase. However, no matter how low the audio frequency is made and no matter how many effective sidebands do appear, the effective bandwidth can never be reduced below the frequency deviation on either side of the carrier. If twice the audio modulation frequency happens to be higher than this peak-to-peak deviation swing, then the effective bandwidth cannot be less than twice this audio frequency. Therefore, with a deviation frequency of 75 kc on one side of the carrier, the effective bandwidth can never be less than 150 kc since the audio frequency cannot exceed the deviation.

After a spectrum analysis, the question invariably arises as to what would happen if the frequency deviation were not kept constant, if the audio frequency were kept constant and the deviation varied. The answer to this is relatively simple if one fully understands the fore-

[2]The actual determination of the amplitude of the sidebands employs higher mathematics, namely Bessel Functions, and is beyond the scope of this book.

going analysis.

Let us assume the audio frequency to be constant at 10 kc and the peak deviation varied from 60 kc to 30 kc. Where the peak deviation is 60 kc, the number of effective sidebands that appear in the frequency spectrum is 18 (9 sideband pairs) and the effective bandwidth is then equal to 18 $\times$ 10 kc or 180 kc. Where the peak deviation is 30 kc, the number of effective sidebands that appear is only 12 (6 sideband pairs) and the effective bandwidth in this instance is only 12 $\times$ 10 kc or 120 kc. Consequently, in this type of spectrum distribution decreasing the frequency deviation while keeping the audio frequency constant decreases both the number of effective sidebands and the effective bandwidth.

Both where the deviation is held constant and the audio frequency varied and where the audio is held constant and the deviation varied, a fundamental relation exists between the frequency deviation and the audio modulating frequency. This relation is known as the *modulation index or deviation ratio* and will be discussed in greater detail later on.

To emphasize the fact that some sidebands of an f-m wave can be (and often are) greater in amplitude than the center frequency component, a breakdown of a typical f-m wave will be illustrated. In part (A) of Fig. 2-4 is shown a typical f-m wave together with the unmodulated carrier signal. The unmodulated carrier frequency is designated as f_C and the audio modulating frequency as f_A. If the amplitude of the audio signal is such that a peak deviation (designated as f_D) of 30 kc appears for an audio frequency of 15 kc, the number of effective sideband pairs is only four. These are illustrated together with the f-m wave and the spectrum distribution in Fig. 2-4.

The maximum instantaneous frequency is equal to the carrier frequency plus the frequency deviation. In respect to what was discussed in chapter 1 this takes place at the maximum point of the positive half cycle of audio. The minimum value of the instantaneous frequency of the f-m wave is equal to the carrier frequency less the frequency of deviation. This takes place at the maximum point of the negative half cycle of audio. These maximum and minimum frequency points are indicated in the f-m wave of Fig. 2-4. If the respective amplitudes of the carrier and center frequency component are examined, it will be noted that, although they are equal in frequency, *the amplitude of the center frequency is much less than that of the carrier*. In fact in the case shown here, where the deviation is equal to 30 kc and the audio equal to 15 kc, the amplitude of the center frequency component (B) is equal to 22.4 percent of the unmodulated carrier amplitude. This is very different from the a-m case where the amplitude of the center frequency component is equal to that of the carrier.

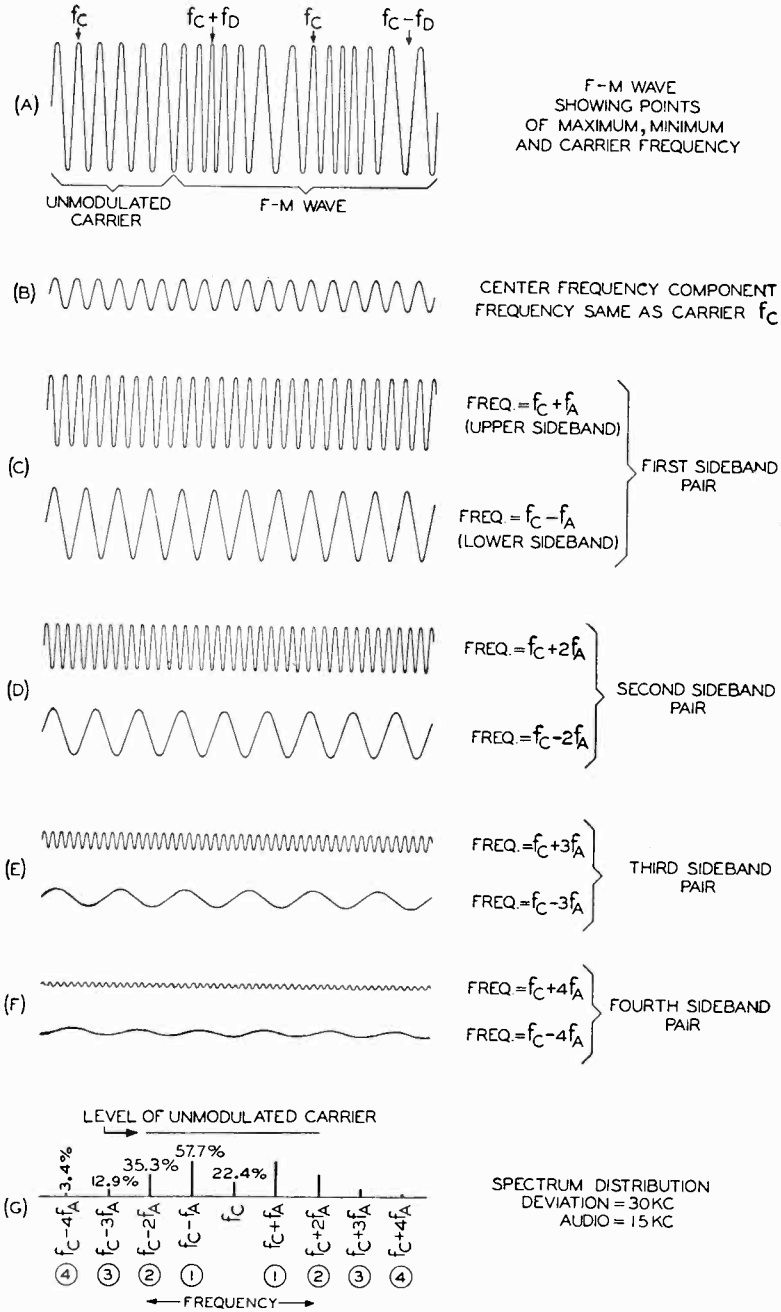

Fig. 2-4. Analysis of an f-m wave with respect to its sidebands and center frequency component.

If the first sideband pair (C) of signals is examined, it is noted that their amplitudes are much greater than that of the center frequency component. The same is true of the second (D) sideband components. However, the third (E) and fourth (F) sideband pairs are smaller in amplitude than the center frequency component, part (B). The relative frequencies of the sideband components are indicated next to their waveforms. The spectrum distribution of the components parts of the f-m wave is illustrated in part (G) of Fig. 2-4.

Since the center frequency component of the f-m wave does not contain any of the intelligence (that is, audio modulating signal), then the smaller its amplitude, the less power wasted. In a.m., half the power of modulation (for 100 percent modulation) is invested in the center frequency component, which is equal in amplitude to that of the carrier, and the power unavoidably contained in it is wasted so far as demodulation at the receiver is concerned. Therefore, the audio modulating equipment for high level a.m. has to be high powered in order that the sidebands contain a sufficient amount of power for proper demodulation. In f.m. the situation is different, especially where more than three pairs of sidebands are present. Most of the power in f.m. is distributed in its sidebands, while the center frequency component of the f-m wave contains a relatively small part of the transmitted power. In a.m., modulation increases the radiated power, whereas in f.m. the power remains constant.

This is one of the important reasons why f-m transmitters are so much cheaper to operate than a-m transmitters. There is greater power efficiency in f.m. than in a.m. Since f.m. does not require high-powered equipment, receiving type tubes can be used for its modulating and speech equipment.[3]

Percentage of Modulation

An interesting highlight of f.m. is the percentage of modulation. In a.m. the percentage of modulation is a direct relation between the audio power and the power of the unmodulated carrier. In this respect the greater the percentage of modulation (up to 100 percent), the greater the audio power output from the receiver. If the percentage of modulation is increased beyond 100 percent (overmodulation), it means that the audio power at the transmitter is greater than the r-f carrier power. If an overmodulated a-m wave is transmitted and picked up by a receiver, distortion results in the receiver output because overmodulation causes distortion of the a-m transmitted signal. (See Fig. 1-5 chapter 1).

A somewhat different situation exists for f.m. in regard to the per-

[3]A similar analysis to that given in this section exists for p.m. Because the analysis is basically very much alike, only the one for f.m. was studied.

centage of modulation. Reference to the percentage of modulation in f.m. as is done in a.m. would presuppose a condition practically impossible to attain. For instance, in a.m. the power or level of audio modulation with respect to that of the carrier determines the percentage of modulation. When the power of the audio signal equals that of the carrier, 100 percent modulation exists. In f.m. the level of the audio modulating signal determines the frequency deviation of the carrier. In this respect then, what would be a good method of determining percentage of modulation for f.m.? Since the level of the audio signal determines the frequency deviation for f.m., it should follow that the relation between the frequency deviation of the carrier and the frequency of the carrier would be a good method of determining percentage of modulation for f.m. This follows somewhat similar lines for percentage of modulation in a.m. However, if this definition for percentage of modulation were to hold true for f.m., the peak frequency deviation would have to equal half of the carrier frequency for 100 percent modulation. For a carrier frequency of 100 mc the peak deviation frequency would have to be equal to 50 mc. This is known to be definitely out of the question for more than one reason. First of all, the level of the audio would have to be quite high and the level of the carrier quite low. Secondly, the deviation necessary would cover too wide a frequency range; it would be completely outside the f-m band.

Since such a definition is not realizable, percentage of modulation in f.m. is defined in another way. It is based upon the maximum available deviation incorporated in the individual transmitter. If an f-m transmitter has provisions so that the audio level will never produce deviations in the carrier greater than a certain amount, then for that amount the transmitter will be working at 100 percent modulation. Since the maximum deviation as set up by the FCC cannot be greater than 75 kc for commercial broadcasting, then 100 percent modulation for f.m. can never exceed a frequency deviation of 75 kc. This definitely places a limit on the level of audio modulating signal. Whenever the audio level increases to a point where it produces a frequency deviation greater than 75 kc, overmodulation for f.m. is said to exist. The audio level in f.m. is seen to exercise a different type of control, so far as percentage of modulation is concerned, than it does in a.m. Briefly, then, 100 percent modulation for f.m. becomes equivalent to the maximum allowable frequency deviation.

Modulation Index — Deviation Ratio

Two of the most important factors in f-m broadcasting are the deviation swing and audio modulating signal. Associations between these two quantities enable us to bring out some very important relations about f.m. The basic relationship between these two quantities

is the ratio of the peak frequency deviation swing to the audio modulating frequency. This ratio, as mentioned above, is known as the *modulation index* or *deviation ratio*. One of the most common symbolic methods of representing this ratio is by the letter M. Some texts use the Greek letter *beta*, β, but in this book we will use the former. This ratio is very important in establishing the number of effective sidebands and the effective bandwidth.

TABLE 1

*Modulation Index** $M = f_D/f_A$	*Number of Effective Sideband Pairs*	*Effective Bandwidth*
0.5	2	$4f_A$
1	3	$6f_A$
2	4	$8f_A$
3	6	$12f_A$
4	7	$14f_A$
5	8	$16f_A$
6	9	$18f_A$
7	11	$22f_A$
8	12	$24f_A$
9	13	$26f_A$
10	14	$28f_A$
11	15	$30f_A$
12	16	$32f_A$
13	17	$34f_A$
14	18	$36f_A$
15	19	$38f_A$
16	20	$40f_A$
17	21	$42f_A$
18	23	$46f_A$
19	24	$48f_A$
20	25	$50f_A$
21	26	$52f_A$
22	27	$54f_A$
23	28	$56f_A$
24	29	$58f_A$
25	30	$60f_A$

*All the M's that are less than 0.5 have only one pair of effective sidebands and their effective bandwidths are all equal to $2f_A$.

Let us examine this ratio and see what importance it holds. Calling the peak deviation frequency f_D and the audio modulating frequency f_A, the index ratio is given by the following:

$$\text{Modulation index: } M = \frac{f_D}{f_A}$$

When it is realized that the *level* of the audio modulating signal determines the amount of deviation and that the audio frequency is also relevant to the value of M (the frequency of the audio is the denominator in the foregoing expression for M), the importance of the modulating signal becomes apparent. It is known that the higher the level of the audio signal, the greater the deviation swing and, consequently, the greater the modulation index M (for a given audio frequency). This ratio M is important in that it helps determine the number of effective sidebands and the effective bandwidth.

The chart in Table 1 will help determine these factors, once the peak deviation swing, f_D, and the audio frequency, f_A, are known. The first column is for the modulation index, where M equals the previously explained ratio. The second column depicts the number of *effective* sideband pairs. With the multitude of sidebands occurring in f.m., some limit has to be set to define what is no longer an effective sideband. The amplitudes of the sidebands in f.m. vary considerably. Some are greater in amplitude than others. The second sideband pair may be so small as to be noneffective, while the third and fourth may be appreciably large — even larger than the center frequency component. However, as we proceed farther away from the center frequency component a point will be reached after which the sideband components will all become very small. The point where the amplitudes of the sidebands become appreciably less than one percent of the amplitude of the carrier is the determining margin of effective bandwidth. In other words, the number of sidebands between this point and the center frequency component of the f-m wave is the number of effective sideband pairs (the sidebands appear equally on both sides of the center frequency component). These effective sideband pairs appear in the second column of Table 1. In the third column the effective bandwidth is included. This effective bandwidth is based upon the number of effective sideband pairs included in the second column. To find the effective bandwidth the number of effective sidebands on both sides of the center frequency component is multiplied by the frequency of the audio modulating signal. Using Table 1 is a simple procedure. The following example will indicate the simplicity of its use.

If the peak deviation frequency as caused by the amplitude of a 5-kc audio modulating signal is equal to 35 kc, the modulation index is 35/5 or 7. Looking down the first column of Table 1 to the modulation index of 7 it is found from the second column, that the number of effective sideband pairs is 11 and the effective bandwidth from the third column is $22f_A$. Since the audio modulating frequency involved is 5 kc, the total effective bandwidth is 22×5 or 110 kc. This does not necessarily mean that in all cases where M is equal to 7 the bandwidth is going to equal 110 kc. *Only* the number of effective sideband

pairs remains the same for the same value of M. For instance, if the peak deviation frequency was 70 kc and the audio frequency 10 kc, the index M would still be 7 and the number of effective sideband pairs still 11. However, the bandwidth in this latter case is equal to $22f_A$ or 22×10 kc, or 220 kc, which is exactly double the previous bandwidth.

Even when the modulation index happens to be some fractional number lying between the numbers in the first column, the effective bandwidth and number of sideband pairs can be easily determined from the table. For instance, if M turns out to be 9¼, then the modulation index of nine should be used. If M is 9¾, then the modulation index of 10 should be used. In other words, whichever number the fractional M is nearer is the one used.

If the modulation index M is less than ½, the number of effective sideband pairs is only one, which is similar to a.m. (This is the basis upon which the Armstrong transmitter was designed.) Since one pair of effective sidebands always exists when M is less than ½, the effective bandwidth can never be less than two times the audio frequency ($2f_A$). Consequently, when the audio modulating signal is higher in frequency than the peak deviation frequency, the effective bandwidth can never be less than twice the audio frequency. As the modulation index M increases, but the deviation remains constant, the number of sideband pairs also increases, but the effective bandwidth decreases as previously mentioned. However, no matter how much M increases, which means no matter how high f_D becomes and how low f_A becomes, the bandwidth can never be less than the peak-to-peak deviation of the carrier frequency. In other words, the effective bandwidth can never be less than twice the audio frequency or the peak-to-peak deviation swing, whichever is greater.

So far we have dealt primarily with the modulation index with respect to the amount of frequency deviation and have said nothing about *phase deviation.* In some transmitters the oscillator is *directly frequency modulated,* and when this type of modulation occurs, we invariably refer to the frequency deviation. In indirect f-m transmitters, where the oscillator signal is initially varied in phase about its relative phase angle, we talk in terms of the amount of phase deviation. In chapter 1 we showed that a shift in phase is equivalent to a change in frequency and vice versa. Consequently, when talking in terms of frequency deviation, we can also refer to the equivalent amount of phase deviation. Likewise, when talking about phase deviation we can also refer to its equivalent in frequency deviation. However, if the transmitter is one of direct f.m., usually only frequency deviation will be referred to, but in indirect f-m transmitters phase deviation is a common term. The amount of equivalent frequency deviation is also mentioned in reference to indirect f-m transmitters,

because it is becoming accepted practice to talk in general terms of frequency deviation.

Once the modulation index M is known, it is a simple process to find the amount of equivalent phase shift. A circle, or one cyclic change of alternating signal, is said to contain 360 degrees or 2π radians, where π is a numerical figure equal to 3.14. Therefore, one radian is said to contain $360/2\pi$ degrees or $360°/6.28$ or $57.3°$. Since the modulation index M as discussed is given a value on the basis of cyclic changes, if we multiply the modulation index M by 57.3 degrees, we will get the equivalent phase shift in degrees. For instance for a modulation index of 7 the equivalent phase shift is equal to $7 \times 57.3 = 401.1°$. This phase shift is known as the *phase deviation.* If a certain indirect f-m transmitter is found to have a peak phase shift at the output of its oscillator-modulator system of 25 degrees for an audio frequency of 50 cycles, it is often desired to know what the equivalent peak frequency deviation is. Since the peak phase deviation, call it P_D, is equal to M times 57.3 and since M is equal to f_D/f_A (the peak deviation frequency f_D divided by the audio modulating frequency f_A) then we have the relation:

$$P_D = M \times 57.3°$$

or

$$P_D = \frac{f_D}{f_A} \times 57.3°$$

solving for f_D we find that

$$f_D = \frac{P_D \times f_A}{57.3°}$$

For the problem under discussion P_D equals 25 degrees and f_A equals 50 cycles, therefore the equivalent peak frequency deviation is equal to:

$$f_D = \frac{25° \times 50}{57.3°} = 21.8 \textit{ cycles}$$

From this analysis we see that we can talk in terms of phase deviation as well as frequency deviation.

Interference Between Signals

When f.m. was introduced to the public its biggest drawing card was its successful method of minimizing interference disturbances usually found with a.m. Many of us have some basic knowledge of the concept that in f-m receivers, amplitude limiters or other means are employed to reduce greatly the effects of amplitude variations on an f-m signal. The type of interference we are concerned with at the moment is that between two of the same types of modulated signals.

Interference between a-m waves is quite well known. Some of this interference is due to image frequency effects which are definitely

undesirable in any receiver. It is the purpose of this section to indicate why such types of interference and others are less likely to occur in f.m. than in a.m. So far as interference between two a-m waves is concerned, let us consider two forms. First, there is interference between two stations that operate on the same or near the same frequency but are, presumably, in different service areas. Secondly, there is the interference between two stations of different frequency, when one is the image frequency of the other. In regard to the former case, if the amplitude of the signal from the station considered to be the interfering one is only 1 percent of the a-m wave from the station being interfered with, the interfering effect will be noticeable. In other words, if an interfering signal is of the same frequency as another signal (or differs so slightly in frequency as to be passed by the selective circuits in the input to the receiver) and if its amplitude is only *one hundredth* as great as that of desired signal, then the interference will be perceptible in the output of the receiver. When image frequencies appear, the same situation prevails in regard to the amplitude of the interfering signal with respect to that of the desired signal. To state it in another manner, the amplitude of the desired a-m signal has to be at least *one hundred* times as great as the amplitude of the interfering signal, no matter what its source, in order that the interfering signal have little or no effect.

If the interfering signal is of the same frequency as the desired signal, the amplitude of the desired signal as it passes through the receiver is changed in accordance with the amplitude variations of the interfering signal. Consequently, the output of the receiver contains the intelligence of both the desired signal and the undesired signal. The weaker the undesired signal, the weaker is the interference output. However, as long as there exists a ratio between the amplitude of the desired and undesired signals that is greater than roughly 100 to 1, then interference in the output of the receiver will be undetected.

When the interfering signal differs so slightly from the desired signal that the selective circuits are broad enough to pass it, then besides interference between the intelligence of the two signals in the output of the receiver, a *heterodyne squeal* will probably be heard. This squeal is due to the slight difference in frequency between the interfering and desired signal. In other words, the interfering signal varies the amplitude of the desired signal in accordance with its varying amplitude, producing a new varying amplitude. This varying amplitude occurs at a frequency that is the difference between the two signals. If this difference is within the audio range, it will appear in the output as a heterodyne squeal. This latter condition of interference is quite complicated, inasmuch as three different types of output are really detected, the intelligence of both the desired signal and the interfering signal and the heterodyne squeal. Consequently, as far as

a.m. is concerned, the signal to noise ratio or the ratio of desired to undesired signal has to be greater than 100 to 1 for interference to be undetected in the output of a receiver.

The f-m situation is completely different. If the ratio in f.m. of the desired signal to an undesired signal on an adjacent channel is as small as 2 to 1, interference will not affect the output as far as the listener is concerned. Though this has been definitely proved by field tests as well as by mathematical analysis, the details are beyond the scope of this book. It is sufficient to state that if the modulation index of the desired signal is high, the chances of interference become reduced. There exists a limitation in the amount of angular variation between the desired and interfering signal such that no matter what the phase variation of the interfering signal, the resultant signal from the interference can never have a deviation ratio (modulation index) greater than ½. Therefore, if the modulation index of the desired signal is made greater than this maximum resultant signal's modulation index of ½, the chances for interference will be greatly reduced.

Two things are basic to the proper discrimination against interfering signals in f.m. If the amplitude of the desired f-m signal is at least twice as great as the amplitude of the interfering signal, the interfering signal will have practically no effect. In addition, the modulation index should be higher than ½, and the higher the better. Even though these standards may be met in practice, it is possible that under some peculiar circumstances, such as a receiver located between two transmitters and perhaps at the limit of the range of transmission of both stations, or a terrain of a special nature, this desired ratio of 2:1 will not prevail. Under these conditions both signals will be heard. This will be discussed in chapter 5.

So far as the receiver itself is concerned, nothing can be done to alleviate the situation, because no amount of alignment or readjustment within the receiver proper can in any way raise the level of the desired signal and reduce the level of the undesired signal. The one possible solution that remains is use of a directional antenna, so that a stronger signal is secured from the desired station.

QUESTIONS

CHAPTER 2

2- 1. *a.* If the amplitude, or strength, of the audio modulating signal of an f-m wave is increased (assuming a constant audio frequency), what happens to the frequency deviation?

b. How does this change in audio signal level affect the appearance of the f-m wave?

2- 2. *a.* If the frequency of an audio modulating signal is increased (assuming no change in its amplitude), what happens to the amount of frequency deviation? What happens to the rate of frequency deviation?

b. For the same period of time how does this change in audio frequency affect the appearance of the f-m wave, still assuming no change in amplitude of the audio signal?

2- 3. What is the chief factor that determines the effective bandwidth in a-m broadcasting? In f-m broadcasting?

2- 4. What purpose does the 25-kc "guard band" serve?

2- 5. What is the minimum adjacent channel separation for f-m stations assigned to the same coverage area? Why this amount?

2- 6. Why is such a large bandwidth allowable in f.m. as compared with that in a.m.?

2- 7. *a.* Are f-m signals limited to two sidebands?

b. In an a-m signal, the center frequency component is *always* much greater in amplitude than the sidebands. Is this also true of the center frequency component of an f-m signal? Explain.

c. Is there any particular order in which the amplitudes of the sidebands of an f-m signal increase or decrease?

d. What determines whether a sideband of an f-m signal is considered effective?

2- 8. *a.* What is a sideband pair?

b. If an audio modulating frequency is equal to 7 kc and if the center frequency of an f-m signal is equal to 96.1 mc, what are the frequencies of the fifth sideband pair?

c. If the f-m wave of part (*b*) is assumed to have only 14 effective sideband pairs, what is its effective bandwidth?

2- 9. *a.* If the audio modulating frequency of one f-m signal is higher than another, which f-m signal has the greater number of effective sidebands, assuming that the strength of each modulating signal is the same?

b. Which signal has the greater effective bandwidth?

2-10. Taking into account the amount of frequency deviation and the audio modulating frequency, what is the minimum limit of the effective bandwidth of an f-m signal?

2-11. *a.* If the amplitude of the audio modulating signal of one f-m wave is higher than another, which f-m signal has the greater number of effective sidebands, assuming that the audio modulating frequency is the same for both?

b. Which signal has the greater bandwidth?

2-12. If the amplitude of a 10-kc audio signal is such that it produces a peak-to-peak frequency swing of 40 kc in frequency modulating an r-f carrier of 100 mc, then:

a. What is the maximum instantaneous frequency of the f-m wave?

b. What is the minimum instantaneous frequency of the f-m wave?

2-13. Where is most of the power found in an a-m signal? Compare this situation with that of an f-m signal?

2-14. *a.* If we were to interpret percentage of modulation of an f-m signal (in terms of frequency deviation and carrier frequency) in a similar manner to the way it is defined in an a-m signal, what would be the equivalent of 100-percent modulation in f.m.?

b. What represents 100-percent modulation in f-m broadcasting today?

2-15. *a.* Define the modulation index.

b. What is another name for the modulation index?

2-16. Explain how both the amplitude and frequency of the audio modulating signal are represented by the modulation index.

2-17. *a.* If an audio signal is equal to 10 kc and the peak-to-peak deviation of an f-m signal is equal to 100 kc, what is the modulation index? What is the effective bandwidth of the f-m signal? Hint: Use Table 1 on Page 41.

b. If a 100-mc carrier is frequency modulated by a 7-kc audio signal such that the f-m signal has a maximum instantaneous frequency of 100.056 mc, what will be the effective bandwidth of the f-m signal? Hint: Use Table 1 on Page 41.

c. If the audio modulating signal of an f-m wave is equal to 8 kc, the carrier frequency equal to 90 mc, and the effective bandwidth equal to 144 kc, what will be the minimum instantaneous frequency of the f-m signal? Hint: First find the modulation index.

d. If the audio modulating frequency is 15 kc and the peak frequency deviation of an f-m signal equals 5 kc, what is the effective bandwidth of the f-m signal?

2-18. *a.* If at an audio modulating frequency of 100 cycles the peak-to-peak frequency deviation of an f-m wave is equal to 80 kc, what is the equivalent peak phase deviation?

b. If the peak phase deviation of an f-m signal is equal to 520 degrees and the audio modulating frequency equals 5 kc, what is the effective bandwidth of the f-m signal?

2-19. *a.* In a-m how much greater does the amplitude of a desired signal have to be than that of an undesired signal to prevent interference from the latter?

b. Under most circumstances how strong must a desired f-m signal be to just eliminate noticeable interference from an undesired signal?

CHAPTER 3

ESSENTIALS OF F-M TRANSMITTERS

Up to this point we have discussed in general the differences between the f-m, the p-m, and the a-m waves. A fair understanding of what an f-m and a p-m wave looks like in comparison with an a-m wave has been obtained. We are now ready for a discussion of how f-m and p-m waves are produced. An analysis of f-m and p-m transmitters will be made in this chapter. The basic principles of how an f-m transmitter works and the fundamental circuit analysis will be included, rather than design problems. The sections of the f-m transmitter that will be stressed are those dealing primarily with the production of f-m signals.

As with a.m., there are numerous methods of producing the final f-m and p-m signals, and we will study the systems that are most common. The intention of this chapter is to cover as much material relative to the operation of the transmitters as is necessary fully to understand this operation.

The Basic Transmitter

In the first chapter, block diagrams of typical f-m and p-m transmitters were illustrated, together with the block diagram for a typical a-m transmitter for comparison purposes (see Fig. 1-14). The most important section of the f-m and p-m transmitters that differed appreciably from the a-m transmitter was the modulator system. Therefore, the modulator sections of the f-m and p-m transmitter will receive the greatest consideration. In f.m. the modulated signal is achieved somewhere at the beginning of the transmitter (that is, at the low power-level stages.) In a.m., especially high level transmission, the modulation is performed somewhere at the output stages of the transmitter *after* the frequency multiplication stages. In f.m. the modulation is performed *before* the frequency multiplication stages because the frequency multiplication aids in increasing phase shift and frequency deviation, besides effectively increasing the carrier frequency.

To effect a change of frequency in the carrier of the direct f-m type of transmitter, a reactance tube modulator or some similar circuit is almost invariably used. This reactance tube works in conjunction with the audio signal to produce a variable reactance across its output. This variable reactance can be either inductive or capacitive in character. If this variable reactance is placed across a tuned *LC* tank circuit, the effective inductance or capacitance of the tank circuit will change, which in turn will change the resonant frequency of the tank circuit, since the resonant frequency is dependent upon the *effective* values of *L* and *C*. This will be evident when reactance tubes and reactance tube modulators are studied in greater detail in the forthcoming sections. These reactance tubes usually work directly with the oscillator of the f-m transmitter for purposes which will be evident later. The oscillator circuits themselves are similar to those employed in a-m transmitters where crystal control is not used.

For indirect f.m. (or p.m.) the situation is somewhat different, in that it is the phase of the signal that is varied directly and not the frequency. For this reason practically all types of indirect f-m or p-m transmitters use crystal oscillators as compared with the noncrystal (inductance-capacitance) oscillators employed in direct f-m transmitters. There are numerous methods of producing a p-m signal, but in this chapter only one p-m system will be discussed in detail. In the following chapter a number of f-m transmitters in use today will be analyzed, and included among them will be three different methods of producing a p-m signal.

The preceding two chapters mentioned certain standards and relationships between the carrier frequency and the audio modulating frequency which pertain to the requirements for proper f-m transmission. Such topics as the maximum amount of frequency deviation, obtaining the correct frequency of transmission, and acquiring of the necessary amount of phase shift to give the required amount of phase deviation for p.m. were referred to, but the methods of securing these requirements were not discussed. In the ensuing sections of this chapter the topics of modulation and frequency multiplication will be of great benefit, in that they will indicate the methods of obtaining these necessary requisites for the proper operation of f-m and p-m transmitters.

Whether or not the f-m transmitter is designed to work on a relatively high power output, the basic considerations as mentioned above are the same. The basic transmitter design of the oscillators, modulators, afc circuits, and frequency multipliers are relatively the same as far as principle or operation is concerned. Whatever fundamental considerations hold for one type will generally hold for similar types.

Simple Frequency Modulator

Frequency modulators had been used long before f-m transmitters were in commercial use. Anyone familiar with visual methods of aligning a-m receivers will recall that frequency modulators, commonly known as wobbulators, are used in conjunction with oscilloscopes, to align the i.f.'s by obtaining the correct selectivity or resonance curves on the oscilloscope. The principle underlying the operation of most types of wobbulators is very simple. In effect its basic operation is as follows:

The rotor of a variable air capacitor is revolved past its stator by an electric motor. This capacitor is connected to the oscillating circuit of a signal generator such that the variable capacitor varies the capacitance of the circuit at values determined by the degree of rotation. The frequency of rotation of the capacitor determines how many times per second there is a cyclic repetition of the complete capacitance change. With arrangements of this kind, the total bandwidth covered may be from a very few percent to perhaps ten percent of the mean frequency. The amplitude of the wave is fairly constant over the entire range, and the speed of rotation represents the audio frequency, or the time rate of change in frequency. The item of audio amplitude which would determine the amount of frequency deviation does not enter into this operation.

Frequency modulators that inject variable reactances into tuned circuits as used in the transmitters today are known as reactance tubes. The analysis of reactance tubes will be discussed at greater length in the following section. In this section we will study a circuit that is one of the simplest types of frequency modulators in order to illustrate basically how a signal can be frequency modulated. After this analysis, it will be much easier to understand the functioning of a reactance tube as applied to the topic in question.

For the moment, before introducing the simple type of frequency modulator, let us refer to an elementary theoretical type of amplitude modulator. We know that to amplitude modulate a carrier, the instantaneous amplitude of the carrier is varied in accordance with the varying amplitude of the audio modulating signal. If a resistance is introduced into an oscillator circuit (in series with the tank coil and capacitor), the resistance will introduce a loss and the over-all amplitude of the oscillatory signal will be reduced according to the value of the resistance. If this new reduced signal is considered as the carrier and if the resistance is made variable above and below its original value, then the amplitude of the carrier will vary accordingly. In other words, when the value of the resistance is increased, there will be a greater loss in the circuit, and the amplitude of the carrier will decrease. Likewise, if the value of resistance decreases, there will be less loss and the amplitude of the carrier will be increased. If this

resistance is made to vary at an audio rate, the amplitude of the carrier also will vary at the same audio rate, and the carrier then will be amplitude modulated. This type of a-m wave can be very simply attained by placing in series with an *LC* tank circuit some type of resistance which will vary at audio rate.

The question then arises as to what this resistance can be. The answer is very simple — a carbon microphone. This microphone contains finely divided carbon granules placed between two conducting disks. One disk is fastened to part of the mike while the other disk is fastened to a movable diaphragm plate. When the plate is at rest, these granules provide an electrical path, exhibiting a certain amount of resistance, between the disks. If the pressure between the two solid carbon plates is varied, the pressure upon the loosely packed carbon granules is also varied. The resistance of the electrical path through these granules changes upon application of pressure to them, and consequently their resistance changes with the application of sound waves to the diaphragm. That is, when sound waves strike the diaphragm, causing it to vribate in accordance with the frequency of the audio, the pressure upon the carbon granules changes, which in turn changes the resistance of the electrical path they provide between the disks.

To show the operation of a simple frequency modulator circuit, an analysis similar to the foregoing will be illustrated. Instead of using

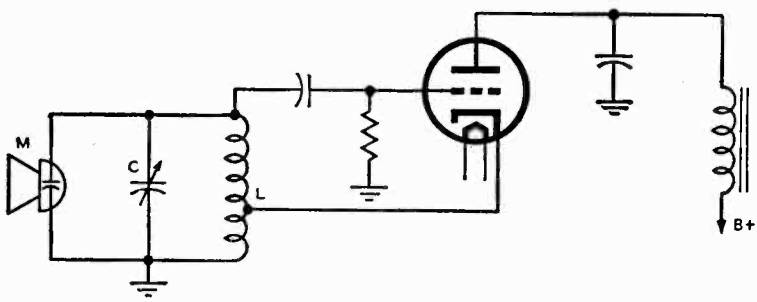

Fig. 3-1. The frequency of the oscillator tank circuit can be changed by actuating the condenser microphone *M*; this is a type of simple frequency modulator.

a carbon microphone as the varying element, a condenser microphone is used. Bearing in mind the possibility of varying the frequency of a tuned oscillator circuit by changing either the capacitance or the inductance, we can proceed with the discussion of what is actually the simplest type of frequency modulator resembling the operation of a broadcast transmitter. This is shown in Fig. 3-1, wherein a condenser-type microphone *M* is shunted directly across the tank circuit (capacitor *C* and inductance *L*) of a simple Hartley oscillator circuit. This

circuit is not intended to convey the idea that this is the type of oscillating system actually used in the transmitter, or that which we shall describe is the exact method of producing the f-m signal. However, if you appreciate that the frequency of an oscillating system can be varied by changing the tuning capacitor — then the arrangement as shown will be productive of information concerning not only the generation of an f-m wave, but also the relation between the audio modulating voltage, the frequency of this voltage, and the f-m carrier. Before going into the analysis of the circuit of Fig. 3-1 let us understand how the condenser microphone works.

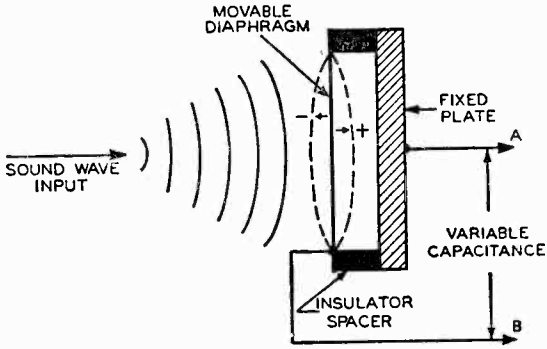

Fig. 3-2. The movable diaphragm of a condenser microphone is vibrated by sound waves and this action varies the distance between the diaphragm and the fixed plate, providing a varying capacitance between the two plates, as at *A* and *B*.

Fig. 3-2 illustrates a simple diagram of a condenser microphone. It essentially consists of two metal plates separated by insulating spacers so that each plate acts as a part of a parallel plate capacitor. One of these plates (a heavy one) is fixed in position within the mike and the other is a very thin plate in the form of a diaphragm. This latter plate has the ability to vibrate upon application of a variable air pressure (sound wave). Since the effective capacitance of a parallel plate capacitor is directly dependent upon the common area between the plates and inversely dependent upon the distance between the plates, it can readily be conceived that the capacitance between these two plates will vary if the movable diaphragm vibrates.

For instance, if a sound wave that is applied to the microphone causes the diaphragm to move outward (that is, away from the fixed plate) the distance between the two plates is effectively increased and the capacitance decreased. On the other hand, if a sound wave causes the diaphragm to move inward (that is, towards the fixed plate) the distance between the two plates is effectively decreased and the capacitance increased. A vibrating or to-and-fro motion of the diaphragm is a natural action when sound is applied to the microphone. It is quite easy to see how the change in position of the diaphragm changes the effective capacitance between the two plates. If each plate had a lead connected to it, a variable capacitance would appear between these

two output leads in accordance with a variable sound input to the microphone.

The very interesting detail in the analysis of a condenser microphone that makes it useful as a means of introducing a method of frequency modulation is the manner in which its capacitance changes in accordance with an audio signal. There are two characteristics of an audio signal that affect the diaphragm of the microphone. One is the volume or level of the signal, and the other is the frequency of the signal. The greater the volume intensity of the audio signal, the greater will be the sound pressure on the diaphragm and the greater the variation of the diaphragm. Hence, a larger change in the effective capacitance exists across the output leads *A* and *B*. The way the capacitance of the microphone changes with the intensity of sound is illustrated in Fig. 3-3. In this figure the change in microphone capacitance is indi-

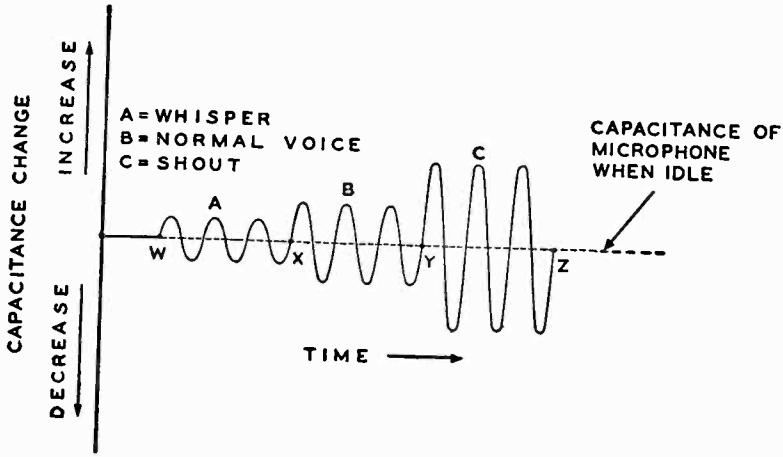

Fig. 3-3. The greater the intensity of the impinging sound of the same frequency on the diaphragm of a condenser microphone, the greater is the change in the output capacitance.

cated for three sounds of the same frequency but of different intensities, such as the equivalent of a whisper, a normal speaking voice, and a shout. The exact change in capacitance is not important at this moment. The frequency of these signals is the same, as indicated by the time references between points w and x, x and y, y and z, all being equal to each other.

The other characteristic of the audio signal, namely its frequency, does not affect the distance that the microphone diaphragm moves, but it does affect the number of times a second that this change in capacitance takes place. This is analogous to the wobbulator, wherein

the speed of the motor determines how many times a second the change in capacitance, caused by the rotating capacitor, takes place. If the period of time between points w and x of Fig. 3-3 is equal to 1 second, the number of cycles involved in that period of time due to a whisper is equal to 3 cycles per second. (This is evidenced by counting the number of completed cycles in that period of time.) If the intensity of sound of the whisper were to remain the same while the frequency increased to double its value, or 6 cycles per second, then for the same period of time between w and x, there would be 6 cycles completed, but the amplitude of the signal, or the change in capacitance would be the same.

Let us now refer back to the oscillator circuit of Fig. 3-1. With no sound going into the microphone the diaphragm is at rest, and the effective capacitance of the oscillator circuit essentially consists of the capacitance C in parallel with that of the microphone. This effective capacitance in conjunction with the inductance of L determines at what frequency the tuned circuit will oscillate. This frequency is termed the resting or carrier frequency of the circuit. With the microphone capacitance in parallel with the tuned circuit of the oscillator, it is evident that any sound waves impressed on the diaphragm of the microphone will be translated into capacitance variations and that these, in turn, will vary the resting frequency of the oscillator tuned circuit.

The greater the change in microphone capacitance, the greater will be the change in the circuit capacitance — hence the greater will be the change in frequency of the oscillations developed in the oscillating circuit. As can be interpreted from the capacitance change in Fig. 3-3, this change in frequency takes place on both sides of the so-called "resting" or "idle" microphone frequency which is the unmodulated carrier frequency. Thus, we might say that a tone which has the intensity or amplitude of a low speaking voice might change the frequency of the oscillator by ± 2 kc; an amplitude equivalent to a moderate voice might change the frequency by ± 4 kc; and an amplitude equivalent to a loud voice might change the frequency by ± 6 kc.

What happens when the frequency of the sound changes? It varies the rate at which the frequency of the oscillating circuit is changed. The higher the frequency of the sound waves, the greater the number of times per second the oscillator frequency will be altered. If a 1000-cycle tone of a certain loudness will change the frequency of the oscillator by 40 kc both sides of the carrier 1000 times per second, a 4000-cycle tone of the same loudness will change the frequency of the oscillator by 40 kc, 4000 times per second, and a 200-cycle tone of like loudness will change the frequency of the oscillator by 40 kc, 200 times per second. Thus the arrangement shown in Fig. 3-1 satisfies the basic requirements of an f-m transmitter, in that the amplitude of the

audio signal varies the frequency of the carrier (that is, determines its deviation) and the frequency of the audio determines how many times a second this deviation takes place.

From what has been discussed relative to the formation of an f-m signal, the general structure of an f-m wave as indicated in the first two chapters can be readily understood.

Returning again to the means of producing frequency-modulated waves, the condenser microphone arrangement shown in Fig. 3-1 has its drawbacks. The fact that it is restricted to the use of a condenser type microphone is an undesirable feature when so many other types of microphones are in use. Furthermore, it is often necessary to separate the microphone from the f-m transmitter by considerable distances; this arrangement is impossible if the circuit of Fig. 3-1 is used. Consequently, some arrangement is required with which any type of microphone can be used and wherein a convenient separation of the microphone and transmitter will be possible. Such an arrangement is found in the use of a *reactance tube.*

Reactance Tubes

Before we discuss some actual frequency modulator circuits that make use of vacuum tubes as a means of producing a signal varying in frequency, it will be necessary to analyze the basic type of tube circuit that causes this variation. This type of tube circuit is known as a *reactance tube* circuit. In terms of practicality, if we can design a circuit so that a vacuum tube receives the audio signal output from a microphone and, due to the frequency and amplitude variations of this audio signal, injects varying reactances into accompanying oscillatory circuits, then we have a method of frequency modulation. This vacuum tube, which is called a reactance tube as previously mentioned, functions typically, but its circuit arrangement is so designed that by varying the degree of grid bias the output impedance of the circuit varies, this variation being principally reactive.

As a basis for analysis of a reactance tube circuit, some factors relative to amplifying vacuum tubes should be understood. These are the three basic tube constants which are the transconductance or g_m of the tube, the amplification factor or μ (mu) of the tube, and the dynamic plate resistance or r_p. An exact understanding of what is meant by these three tube characteristics is essential to the complete comprehension of what is to follow in regard to reactance tubes.

The transconductance, g_m (or mutual conductance as it is sometimes called) of a tube is defined as the ratio of the change in plate current, i_b, to the change in grid voltage, e_c, which produced it, this ratio being considered with the plate voltage, e_b, remaining constant.

Symbolically it is written as

$$g_m = \frac{di_b}{de_c} \ldots\ldots \text{(with } e_b \text{ constant)}$$

In this ratio the letter d means a "change in." Since the plate current, expressed in amperes, is in the numerator and the grid voltage in the denominator of this ratio, the g_m is expressed in units called mhos. (In other words, mhos is the reciprocal of ohms.) There are other transconductances between certain other elements of a tube but with these we are not concerned. When the term transconductance is used without qualification, it is always the control-grid to plate transconductance that is meant, and the usual symbol is g_m. It is a known fact that a change in the grid voltage of a tube causes a change in the plate current of the tube especially with the plate voltage remaining constant. These changes do not occur in such a fashion that g_m is kept constant. With the change in plate current caused by the change in grid voltage the g_m of the tube also changes and does not remain constant but rather varies over wide limits depending upon the point of operation. In practice the trend in expressing the g_m is toward the use of micromhos (millionths of a mho) in order to avoid the use of decimals. The transconductance, g_m, is a very important property of a tube, because it tells how effective the grid is in effecting a change in the plate current of the tube, and this is very important in the analysis of reactance tubes, as will be seen.

The amplification factor, μ, or *amplification constant,* expresses numerically how much greater effect on the space charge the electrostatic field set up by a voltage applied to the grid has than the electrostatic field set up at the plate by the same voltage. This is a numerical expression which is based upon the action of the grid and plate fields upon the space charge with respect to the distance between the grid and plate. By definition, amplification factor, μ, is the ratio between a small change in plate voltage and a small change in grid voltage while the plate current remains unchanged. Otherwise expressed,

$$\mu = \frac{de_b}{de_c} \ldots\ldots (i_b \text{ constant})$$

However, if the changes are appreciably large, then the plate current will also change. In which case, in order for the definition to hold, the change in plate voltage and the change in grid voltage both should produce the same change in plate current independently. It requires a much greater change in plate voltage than in grid voltage to cause the same change in plate current. Thus, a tube may have a "mu" of 10, which means that a change in grid voltage is 10 times as effective in controlling the plate current as the same change in plate voltage.

Reference to amplification occurs in the following manner: with a

steady voltage applied to the control grid and a steady voltage applied to the plate, a steady value of current flows in the plate circuit. A variation in the voltage upon the grid, with the voltage applied to the plate of the tube held constant, causes a change in plate current. Since the current in the plate circuit has been varied, the effect is equivalent to a change in the plate voltage, namely, that change which would have produced an equal variation in plate current if the plate voltage had been altered while the grid voltage was held fixed. Because of the greater effectiveness of a change in grid voltage in influencing the plate current, the equivalent change in plate voltage can be considered as equal to the change in grid voltage multiplied by that number which identifies the number of times a change in grid voltage is more effective than a change in plate voltage in influencing the plate current.

Another very important property of vacuum tubes is the dynamic plate resistance, or r_p of the tube. This resistance is defined as the ratio between a small change in plate voltage and a small change in plate current with the grid voltage remaining constant. Expressed mathematically,

$$r_p = \frac{de_b}{di_b} \ldots\ldots (e_c \text{ constant})$$

This relation is particularly important when working with vacuum tube circuits, because it is often desirable to know the resistance of the plate circuit of a tube in comparison with the rest of the circuit in which it is used.

These tube constants for almost all types of tubes can be found in handbooks. Even if they are not given directly, they can be derived from the family of curves usually supplied with good tube handbooks.[1] In most cases only the g_m and r_p are listed for pentodes and the μ and r_p for triodes. The reason for this is that in pentodes the g_m is often considered more important than the μ of the tube and vice versa for triodes. However, the other tube characteristics can be determined from the graphical characteristic curves of the individual tube in question.

In passing it may be wise to state that a relation exists among these three tube constants such that:

$$\mu = r_p g_m$$

This is proved from the knowledge that

$$\mu = \frac{de_b}{de_c} \text{ and } r_p = \frac{de_b}{di_b} \text{ and}$$

$$g_m = \frac{di_b}{de_c}$$

[1]For a good analysis of determining the values of g_m, μ, and r_p from the characteristic curves of the respective tubes see pages 160 to 184 in the book, "Inside the Vacuum Tube," by John F. Rider, John F. Rider Publisher, Inc.

therefore, substituting the quantities in the above expression we find:

$$\frac{de_b}{de_c} = \frac{de_b}{di_b} \times \frac{di_b}{de_c}$$

where the di_b's cancel out since they appear in the numerator and denominator of the right side of the equation and, consequently,

$$\frac{de_b}{de_c} = \frac{de_b}{de_c}$$

which proves the above relation between the tube constants.

With the basic concept of tube constants established let us return to the discussion of reactance tubes. These tubes had been used long before f.m. was commercially feasible, primarily in automatic frequency control circuits, which will be discussed later in this chapter. In Fig. 3-4 the basic circuit for a reactance tube is shown. The two

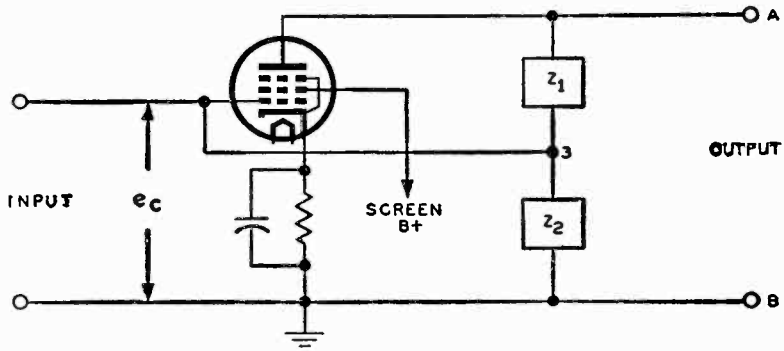

Fig. 3-4. A basic reactance tube circuit. The impedances Z_1 and Z_2 can be a combination of resistance and inductance or resistance and capacitance, but not a combination of inductance and capacitance.

impedances Z_1 and Z_2 that are in the output circuit can be either a combination of resistance and inductance or a combination of resistance and capacitance. In other words there are primarily four possibilities in the combination of Z_1 and Z_2. If Z_1 is capacitive, Z_2 is resistive. If Z_1 is resistive, Z_2 can be either inductive or capacitive. If Z_1 is inductive, Z_2 is resistive. It will be noted that any combination of inductance and capacitance in the Z_1-Z_2 circuit is carefully avoided. The reason for this is that primarily only a 90-degree phase shift is desired with little or no chance of forming a resonant circuit in the output. This will be evident as the analysis of reactance tubes proceeds.

The circuit of Fig. 3-4 can be considered as though a generator was

in parallel with the two series impedances of Z_1 and Z_2. When the reactance tube used is either a pentode or a tetrode, the tube can be considered a generator whose generated current i_b is equal to $g_m e_c$ (from the relation $g_m = i_b/e_c$) and whose internal impedance is equal to the dynamic plate resistance r_p of the tube. Under these circumstances Fig. 3-4 reduces to the equivalent circuit of Fig. 3-5. If the

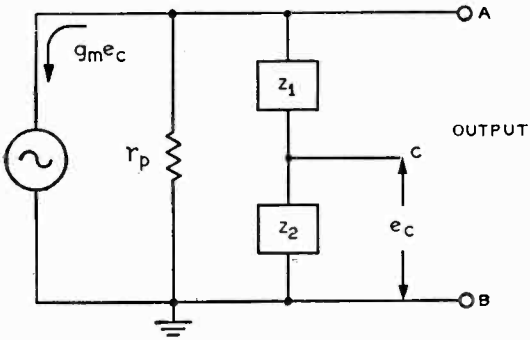

Fig. 3-5. The equivalent circuit of Fig. 3-4 in which the tube can be considered as a constant-current generator with internal resistance equal to the plate resistance of the tube.

plate resistance of the tube is high (as is usually the case in tetrodes and pentodes) the circuit of Fig. 3-5 can be reduced still further to the equivalent circuit of Fig. 3-6. In this figure the plate resistance and also any other loading resistance is temporarily neglected. If the impedance between points A, B is designated as Z_{AB} and the voltage across points A, B as E_{AB}, then this voltage is equal to the current flowing through the series impedance network of Z_1 and Z_2 multiplied by the impedance between points A, B. The thing we are interested in is the impedance Z_{AB}, because the value of this impedance will indicate to us the value of the injected reactance and resistance that is caused by such a circuit. At first glance it might appear that the output impedance is just the series combination of Z_1 and Z_2, especially since the plate resistance of the tube is neglected in Fig. 3-6. This is not a true picture, because one of the components in the load (Z_1 or Z_2) is reactive, and consequently the injected reactance is a variable factor that depends upon the plate current flowing, as well as the frequency of operation. Since the plate current depends upon the g_m of the tube, the value of the injected impedance likewise depends upon the g_m of the reactance tube. This is proved as follows:

Impedance Z_{AB} looking into terminals A, B in the direction indicated in Fig. 3-6 is equal to the voltage across A and B divided by the current i_{AB} flowing through Z_1 and Z_2. This is nothing more than an application of Ohm's law to alternating currents. (In d-c application Ohm's law states that the resistance $R = E/I$, whereas in a-c application Ohm's law states the impedance $Z = E/I$. In the latter case it

must be remembered that the phase relationships of a.c. have to be taken into account to obtain a complete answer.) Therefore,

$$Z_{AB} = \frac{E_{AB}}{i_{AB}} \tag{1}$$

but we know that the current i_{AB} is equal to the transconductance multiplied by the grid voltage e_c or that $i_{AB} = g_m e_c$. Substituting this in expression (1) gives

$$Z_{AB} = \frac{E_{AB}}{g_m e_c} \tag{2}$$

In Fig. 3-6 it is noticed the voltage across impedance Z_2 is the applied grid voltage and this voltage is also equal to a certain amount of the

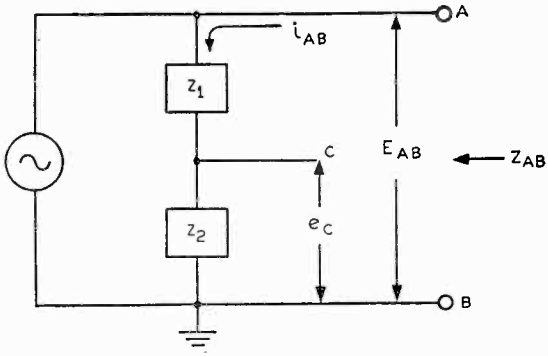

Fig. 3-6. The equivalent circuit of Fig. 3-5, wherein the plate resistance of the tube is considered sufficiently high to be neglected, as is also any loading resistance.

voltage E_{AB} across the whole output network. Here Z_1 and Z_2 is a voltage dividing network to the voltage E_{AB}. Consequently, the voltage e_c across impedance Z_2 is:

$$e_c = E_{AB} \times \frac{Z_2}{Z_1 + Z_2} \tag{3}$$

If this value is substituted for e_c in equation (2), Z_{AB} will be simplified further. Thus

$$Z_{AB} = \frac{E_{AB}}{g_m E_{AB} \times \frac{Z_2}{Z_1 + Z_2}} = \frac{1}{g_m} \frac{Z_1 + Z_2}{Z_2} = \frac{1}{g_m}\left(1 + \frac{Z_1}{Z_2}\right) \tag{4}$$

Therefore,

$$Z_{AB} = \frac{1}{g_m} + \frac{1}{g_m}\left(\frac{Z_1}{Z_2}\right) \tag{5}$$

Equation (5) is very important as it tells us what impedance is seen when looking into the reactance tube circuit from terminals A and B. Since the transconductance is given in mhos, $1/g_m$ will be in ohms. Therefore, equation (5) states that the impedance across terminals A and B consists of a resistance in series with a reactance. The value

of the series resistance is equal to $1/g_m$, and the value of the reactance is equal to $1/g_m \times Z_1/Z_2$, where g_m is the transconductance of the tube in use and impedances Z_1 and Z_2 are, as specified previously, any one of four combinations.

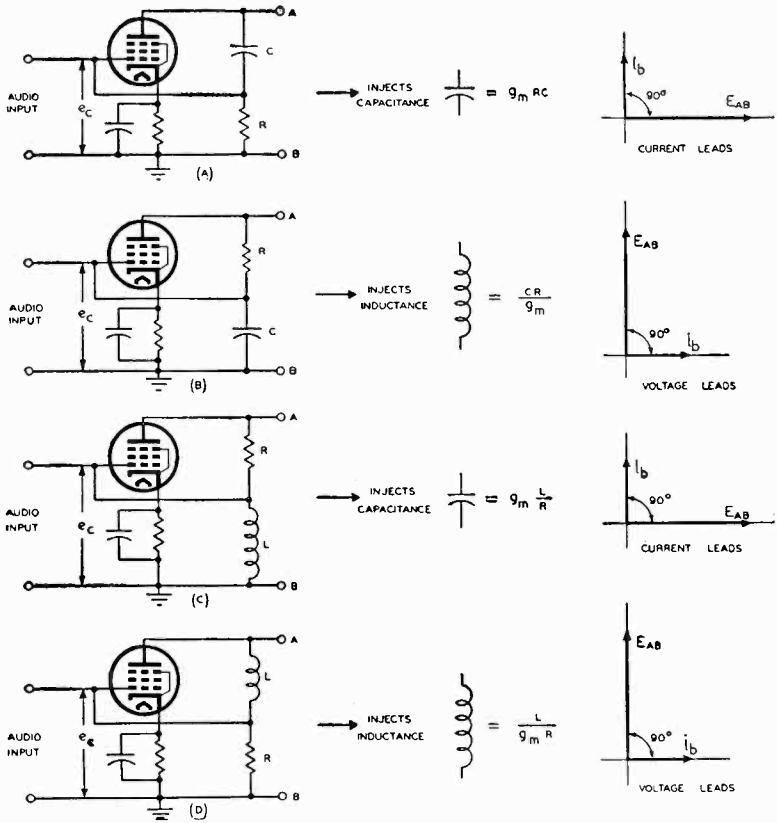

Fig. 3-7. The four possible reactance-tube circuits showing either injected capacitive or inductive reactances, each of which depends on the value of the transconductance of the tube. The quadrature phase relations between the current and voltage are shown in the vector diagrams.

The four possible combinations of these impedances are shown in Fig. 3-7. In part (A) when the impedance Z_1 is a capacitance and Z_2 a resistance, the reactive component of equation (5) $[(1/g_m)(Z_1/Z_2)]$ becomes a *capacitive reactance,* and the value of the capacitance that is injected into any accompanying circuit is equal to $g_m RC$. The respective injected reactance for the other types of reactance tube circuits is shown in parts (B), (C), and (D) of Fig. 3-7. These injected reactances are based upon the assumption that the impedance in the

circuit between the grid and the plate Z_1, is *much greater* (at least 5 times) than impedance Z_2. Besides reactances, resistances also are injected, but because of the tubes chosen for reactance tubes in conjunction with the accompanying circuits and the fact that Z_1 is much greater than Z_2, these injected resistances have little effect. For a true picture of what the injected parallel resistance and reactance components are for all four different cases without any assumption as to the magnitude of Z_1 compared with Z_2, consult Table A in the appendix. If the injected reactances of Fig. 3-7 are examined, it will be noticed that every one depends upon the value of the transconductance or g_m of the tube. Since the g_m of the tube is dependent upon the grid voltage, it is readily evident that, if an audio signal were impressed across the input grid circuit of the tube, the g_m of the tube would vary in accordance with the audio voltage variation. Consequently, since the g_m of the tube varies in accordance with the audio input, the injected reactance across terminals A and B, which is dependent upon the g_m, will also vary in accordance with the audio.

These reactance tube circuits are often termed *quadrature circuits*, because there is effectively a 90-degree phase relation between the r-f voltage across terminals A and B in the output and the r-f plate current. When the plate resistance of the reactance tube and the injected parallel resistance are high, both resistances can be considered as having negligible effect on the phase relation between the aforementioned voltage and current and can be considered as being 90 degrees out of phase with each other. These phase relations are shown in vector diagrams accompanying each drawing in Fig. 3-7. Where the injected reactance is capacitive, the plate current i_b leads the voltage E_{AB} across the output by 90°. This is illustrated in parts (A) and (C) of Fig. 3-7. In parts (B) and (D) the injected reactance is inductive and the voltage output E_{AB} leads the plate current i_b by 90°.

Let us consider the following as a typical example of how to calculate the injected reactance of a reactance tube circuit. The reactance tubes employed are of the high g_m type to provide as high a variation in g_m as possible with variation of grid voltage. The reason for this is that the greater the changes in g_m that can be accomplished, the greater will be the variation in injected reactance. Consequently, for this example let us consider the circuit of Fig. 3-7 part (A) where the tube used is a 6AC7. With 300 volts on the plate and 150 volts on the screen, the transconductance or g_m of the tube for a cathode bias of 2.2 volts is 8000 micromhos. The capacitance used between the plate and control grid is equal to 25 $\mu\mu f$, and the resistance between the cathode and control grid is equal to 1000 ohms. Under these circumstances the injected reactance is capacitive, and the capacitance is equal to the following:

$$Capacitance = g_m RC$$

and, since g_m equals 8000 micromhos or 0.008 mho, R equals 1000 ohms, and C equals 25 $\mu\mu f$, the capacitance equals:

$$0.008 \times 1000 \times 25 = 200\ \mu\mu f$$

Therefore, 200 $\mu\mu f$ capacitance exists across the output of the circuit with no signal applied to the input. If a sine wave that is alternating one volt above and below the fixed 2.2-volt cathode bias is injected into the grid, the total effective input voltage existing across the grid at the maximum positive peak of audio signal is equal to —2.2 + 1 or —1.2 volts and at the maximum negative peak of audio signal equals —2.2 + (—1) or —3.2 volts. Therefore, the grid bias is alternating between —1.2 volts and —3.2 volts, and the g_m also changes. According to the g_m curves for the 6AC7, with the previously stipulated voltages applied to the other tube elements, the g_m at a grid voltage of —1.2 is equal to 13,500 micromhos or 0.0135 mho, and at a grid voltage of —3.2 volts the g_m is equal to about 3800 micromhos or 0.0038 mho. Under these limits of grid voltage the injected capacitance will be as follows:

For a grid voltage of —1.2 volts and a g_m of 0.0135 mho the injected capacitance $= 0.0135 \times CR$
$= 0.0135 \times 25 \times 1000$
$= 337\ \mu\mu f$

And for a grid voltage of —3.2 volts and a g_m of 0.0038 mho, the injected capacitance $= 0.0038 \times CR$
$= 0.0038 \times 25 \times 1000$
$= 95\ \mu\mu f$

From these values it can be readily understood that with a fixed bias of —2.2 volts on the grid and a signal that is varying by one volt positive and negative, the injected capacitance varies between the limits of 337 to 95 $\mu\mu f$ or through a difference of 242 $\mu\mu f$. This example was chosen merely to show how the audio input voltage changes the injected capacitance of the circuit of part (A) of Fig. 3-7 and does not typify values used in practice.

Reactance Tube Modulator (Frequency Modulator)

The preceding section analyzed the fundamentals of reactance tube circuits at great length. It was shown that a reactance tube circuit can be used to inject either a capacitance or an inductance into any circuit that is across its output (that is, the output usually considered between plate and ground or plate and cathode of the reactance tube). With circuits such as were indicated by a typical example, a small change in grid bias can vary the injected reactance quite a bit.

In actual practice, reactance tubes are used as modulators where direct f.m. and in many instances where indirect f.m. are required.

As used in direct f.m. the variable output reactance of a reactance tube is used to vary the frequency of an oscillator circuit so that the output of the oscillator will be frequency modulated. The use of the reactance tube as a frequency modulator is seen best if a typical circuit of a reactance tube modulator is studied.

Fig. 3-8 illustrates a simplified circuit of a reactance tube modulator in conjunction with an oscillator circuit. The reactance modulator

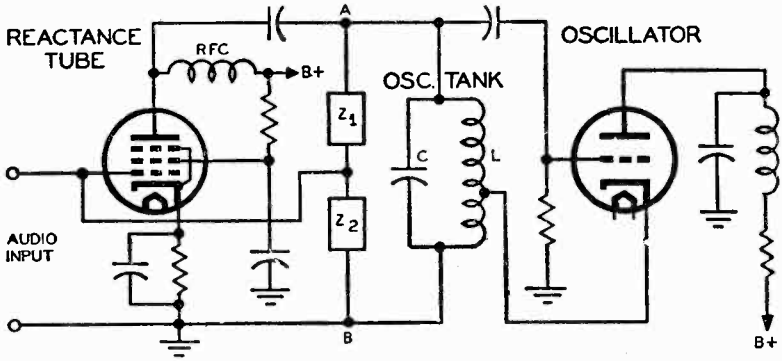

Fig. 3-8. Simplified schematic of a reactance tube modulator (to the left of terminals A-B) with an oscillator circuit of the Hartley type. The impedances Z_1 and Z_2 can be any of the combinations illustrated in Fig. 3-7.

circuit is shown to the left of terminals *A* and *B*, and the oscillator circuit to the right of these terminals. The latter is a simple Hartley oscillator in which the capacitance *C* and the inductance *L*, in conjunction with the reactance injected by the reactance tube, are the components that determine the frequency of oscillations. The reactance tube circuit is illustrated similarly to the way it was in Fig. 3-4 with the impedance Z_1 and Z_2 shown in the output instead of specific components. This is to avoid limiting the components of Z_1 and Z_2 further than to make them any one of the four previous types of combinations.

With no signal voltage applied to the input circuit, the reactance tube will have a fixed value of g_m, and according to the values of Z_1 and Z_2, a capacitance or inductance will exist in parallel with the *LC* oscillator tank circuit. In reality, then, the true frequency of oscillations is determined by the oscillator tank circuit components plus whatever reactance is injected across this tank by the modulator circuit. When no signal is being received by the reactance tube, the frequency of oscillations of the modulator-oscillator is called the center frequency. To understand exactly how the afore-mentioned values control this center frequency let us consider the following:

The frequency of oscillations of an ordinary Hartley oscillator circuit, as shown to the right of terminals *A* and *B* of Fig. 3-8, is deter-

mined by the inductance L and the capacitance C. The frequency f_r is called the resonant frequency, and it is determined by the following mathematical relation:

$$f_r = \frac{1}{2\pi\sqrt{LC}}$$

where L is equal to the inductance in henrys
C is equal to the capacitance in farads and
π is equal to a number whose value is 3.14.

The mathematical sign under which the product of LC appears is called a square root sign or radical sign ($\sqrt{\ }$). The mathematical interpretation of the sign is what number multiplied by itself will give the value of final answer under this radical sign. Thus, a square root sign such as $\sqrt{12 \times 6}$ is equal to $\sqrt{72}$ (first carrying out the arithmetic under the radical sign) and the next question that follows is what number multiplied by itself will give an answer equal to 72. This number is found to be 8.48. Therefore, $\sqrt{12 \times 6} = \sqrt{72} = 8.48$.

However, with the oscillator circuit used in conjunction with the reactance tube modulator, the components that determine the frequency of oscillations are changed. In other words, existing across the LC tank circuit is a *fixed* value of either capacitance or inductance which is injected across this tank from the reactance tube output when no audio signal is being received. If the injected reactance is capacitive, there are effectively two capacitors in parallel with an inductance, both of which are the determining elements of a new oscillator frequency. The frequency of oscillations is determined by the circuit,

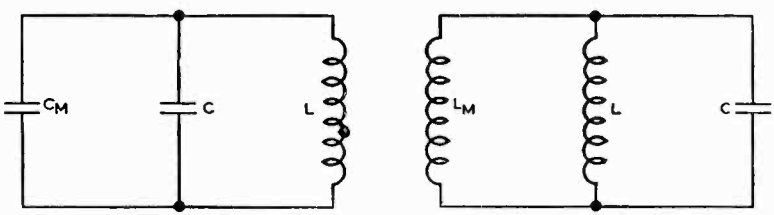

Figs. 3-9, left, 3-10 right. Equivalent circuits of Fig. 3-8 for determination of the oscillator frequency. In Fig. 3-9 the injected reactance is capacitive, C_M, and in Fig. 3-10 the injected reactance is inductive, designated as L_M.

as illustrated in Fig. 3-9. The frequency is still dependent upon capacitance and inductance, but the capacitance is changed and equal to the capacitor C in parallel with the injected capacitance from the modulator, designated as C_m. Since the two capacitors are in parallel, to get the total effective capacitance their individual capacitances are added. Therefore for the case under consideration the total effective capacitance, call it C_t, is equal to $C_m + C$. Hence, the new resonant

frequency of the complete tank circuit with its added capacitance is equal to:

$$f_r = \frac{1}{2\pi\sqrt{L(C + C_m)}}$$

or

$$f_r = \frac{1}{2\pi\sqrt{LC_t}}$$

where $C_t = C + C_m$

If the injected reactance is inductive instead of capacitive, the new frequency determining tank circuit is as shown in Fig. 3-10. Instead of two capacitors in parallel there are two inductors in parallel. One inductor, that of the oscillator circuit, is designated as L, and the other inductive component, from the reactance tube modulator, is designated as L_m. The new frequency of oscillations is determined by the total effective inductance and the capacitance in the circuit. The total inductance, call it L_t, is equal to the two inductances L and L_m in parallel. Inductors in parallel are not added the way capacitors in parallel are added. Inductors in parallel resemble resistors in parallel. To get the total inductance of two inductors in parallel we take the reciprocal of each, thus:

$$\frac{1}{L_t} = \frac{1}{L} + \frac{1}{L_m}$$

$$\frac{1}{L_t} = \frac{L + L_m}{L \times L_m}$$

where $L_t = \dfrac{L \times L_m}{L + L_m}$

Consequently, the resonant frequency of the new tank circuit is:

$$f_r = \frac{1}{2\pi\sqrt{CL_t}}$$

Or to put it in terms of all the inductances:

$$f_r = \frac{1}{2\pi\sqrt{C \times \left(\frac{L \times L_m}{L + L_m}\right)}}$$

As a typical example we can assume that the injected reactance from the modulator tube is capacitive and equal to 50 $\mu\mu f$. Also the inductance L of the tank circuit is equal to 100 microhenrys (100×10^{-6} henrys)[2] and the capacitance C equal to 50 $\mu\mu f$ (50×10^{-12} farads).[2] Under these circumstances the frequency of oscillations is determined as follows:

[2]For a complete understanding of what is meant by the numbers 10^{-6} or 10^{-12} or similar ones see the section on "Powers of Ten," in the appendix.

$$f_r = \frac{1}{2\pi\sqrt{LC_t}}$$

where $C_t = C + C_m = 50 + 50 = 100\ \mu\mu f$ or 100×10^{-12} farads. Therefore,

$$f_r = \frac{1}{2\pi\sqrt{100 \times 10^{-6} \times 100 \times 10^{-12}}}$$

$$f_r = \frac{1}{2 \times 3.14\sqrt{10{,}000 \times 10^{-18}}}$$

$$f_r = \frac{1}{6.28 \times 100 \times 10^{-9}} = 1.59 \text{ megacycles}$$

Consequently, under the foregoing stipulated conditions the frequency of oscillations of the circuit, without an audio signal applied to the control grid of the reactance tube modulator, is equal to 1.59 mc or 1590 kc. This is called the resting or center frequency of the oscillator. If there is an audio signal applied to the grid of the reactance tube, the bias on this grid will change in accordance with this audio signal. Hence, the transconductance or g_m of the tube will also change, and thus the output reactance across the LC tank circuit will vary. If this change in g_m is such that the fixed injected capacitance of 50 $\mu\mu f$ is varied to a maximum of 55 $\mu\mu f$ from a minimum of 45 $\mu\mu f$, the resonant frequency will change accordingly. The change in the resonant frequency will be approximately 40 kc on either side of the resting frequency of the oscillator-modulator circuit. The variation of this injected reactance is not instantaneous from the value of 50 $\mu\mu f$ to 55 $\mu\mu f$ or to 45 $\mu\mu f$ but these are the maximum and minimum values of injected capacitances respectively, and, when the afore-mentioned audio signal is being received by the reactance tube, the value of injected capacitance varies from instant to instant. This indicates that the frequency of oscillations of the complete circuit is also different at every instant and changes directly with the audio signal. Thus, it is said that a reactance tube used in the fashion just described, *frequency modulates* the resting or center frequency of the complete circuit.

In brief, the effect of such a system of f.m. is that the reactance tube offers a reactive output varying with audio input so that this varying reactance changes the frequency of some oscillator circuit. Thus, a practical system, wherein the frequency of a carrier signal is varied directly, causing an f-m signal, is obtainable. At this point it should be stressed that the oscillator circuit used for direct f-m systems should not be fixed in value, as a crystal oscillator, but its frequency should be capable of varying over the desired range. In a crystal os-

cillator, injecting a reactance across the crystal circuit will vary the frequency by a minute amount, not enough to cause the f.m. that is desired. What does happen is that the reactance tube causes p.m. when used with a crystal oscillator. This will be seen later when the different p-m systems are discussed.

In comparing a.m. with a practical system of f.m. (as that just discussed) a few important points of difference between the systems should be stressed. First of all, in the a-m form of transmission the audio modulating signal causes the *amplitude* of the carrier to vary in accordance with the amplitude of the audio, whereas in f.m. the audio signal causes the *frequency* of the carrier signal to vary in accordance with the amplitude of the audio. Secondly, the a.m. of the carrier signal is accomplished after the frequency multiplication stages (if any), whereas in f.m. the modulation is accomplished before the frequency multiplication stages. In fact, in direct f.m. the modulation is accomplished within the first stages of the transmitter. In this respect, a.m. also differs from f.m. in that the former is achieved by modulating the *final* carrier frequency (that frequency termed the transmitting frequency) whereas the latter is achieved by modulating the resting frequency of the oscillator before multiplication. The f.m. occurs before the frequency multiplication in order to multiply the frequency deviation or frequency swing from the original resting frequency of the oscillator. This will be discussed in greater detail in a later section of this chapter on frequency multiplication.

A third and important difference between these two types of modulation is, as mentioned previously, the amount of power involved in modulation. In a.m. the total power involved is split between the final carrier and the two sidebands involved, with 50 percent of the power in the carrier component of the final a-m wave and 50 percent in the sidebands, for 100 percent modulation. Therefore, for efficient transmission of intelligence the percentage of modulation should be as high as possible (up to 100 percent) and hence, a great deal of audio modulating power is needed. In f.m. comparatively little power is in the center frequency component of the f-m wave, which is often smaller than some of the sidebands involved. Most of the power is vested in the many sideband components. Under these circumstances the power required for modulating in f.m. is very small compared with that used for a.m. In f.m. the total radiated power is constant, regardless of modulation. In a.m. the r-f power of the modulated wave is greater than that of the unmodulated wave. Therefore, in f.m. the power requirements of the transmitter are not affected by modulation; but in a.m. more power is required when the carrier is modulated than when it is not. Consequently, receiving type tubes can be used for the modulator section of f-m transmitters instead of the power tubes used in a.m.

Up to this point, we have dealt with a form of direct f.m. by employing reactance tubes. Although this type of direct f.m. was stressed, it is by no means the only type of direct frequency modulator. There are many other types of direct f-m systems which also have practical possibilities, and some are used in the transmitters in operation today. Reactance tube frequency modulators were shown because they are the most universally discussed type and, it is believed, the most important. Any type of a circuit that offers a variable reactive output with input audio voltage can be used as a direct f-m system.

Phase Modulator

In the foregoing analysis of direct f.m. it was stated that the oscillator employed could not be a crystal oscillator because crystal oscillators are considered to be approximately fixed in frequency. In other words, the oscillator employed should be able to shift in frequency over a relatively considerable range. Such oscillators are often called variable frequency oscillators (abbreviated V.F.O.) Even though V.F.O.s are used in direct f-m systems, they have a tendency to drift away from their center frequency, and control circuits are often employed to stabilize the oscillator center frequency. The control system employed to check this drift in frequency is termed an automatic frequency control system (abbreviated afc), and it will be analyzed later in this chapter. In indirect f-m or p-m systems crystal oscillators are employed instead of V.F.O.s., because a fixed frequency is desired and the phase of this fixed center frequency is the characteristic to be modulated.

Despite the fact that the terminology of f.m. originated with Armstrong's system, his design is really not one of direct f.m. but rather one of p.m. This system will be analyzed in the next section. However, since p.m. causes an equivalent f.m. and, in effect, an f-m signal is transmitted from Armstrong's transmitter, the terminology of f.m. stems from his design.

As has been shown, when a carrier is frequency modulated, its instantaneous frequency is deviated away from the center or resting frequency by an amount determined by the amplitude of the audio signal. In p.m. a similar situation exists. When the carrier signal is phase modulated, the instantaneous phase of the carrier deviates away from its resting position before modulation. It is evident that such a p-m signal can be had if the carrier is passed through some time-delay network which will make the carrier change in phase. Furthermore, if this time-delay network is made to vary in accordance with the amplitude of some audio signal, this network will change the phase of the carrier in conformity with this audio signal, and the resultant output from the time-delay network will be a p-m signal. It should be remembered that the center frequency is determined by some sort

of a crystal oscillator circuit, so that it is stabilized and has very little chance to shift in frequency. Thus in p.m. it can be said that the instantaneous phase of the carrier signal is varied, while the amplitude and frequency remain constant. This instantaneous change in phase shift produces an equivalent or indirect change in frequency of the signal. This was shown in chapter 1. There are many methods of producing p-m signals. Many of them are practical and many are not. It is not the purpose of this section to illustrate all the different types

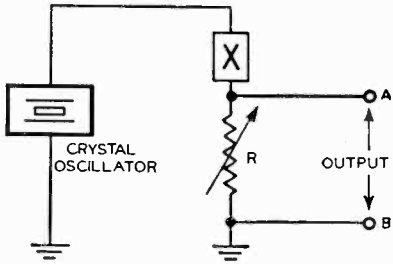

Fig. 3-11. The series combination of reactance X and resistance R, in parallel with the crystal oscillator, is the time-delay network that provides a phase change to the crystal oscillator frequency.

of phase modulators in existence. However, a basic phase modulator circuit will illustrate how p.m. can be produced.

Fig. 3-11 shows a simple p-m circuit which consists essentially of a crystal oscillator in parallel with a series combination of a reactance X and a resistance R. This series combination of X and R is the time-delay network that imparts a phase change to the crystal oscillator frequency. The output voltage of this circuit is taken across terminals A and B. The system works as follows:

Without the time-delay network, the frequency of the oscillator has a certain phase relation of its own. With the time-delay network wired across the oscillator circuit, as shown, the resistive and reactive components together are so chosen (at fixed values) that they offer a phase change in the oscillator frequency at some specific value between 0 and 90 degrees, the exact amount determined by the fixed values of X and R. Making the resistance R variable, likewise makes the phase of the oscillator frequency variable, and the oscillator output voltage across terminals A and B then varies in phase.

The way the XR network causes a phase shift is easily explained by the vector diagram of Fig. 3-12, in which X represents the fixed value of reactance and the R's represent different values of the variable resistance R. As there is a 90-degree phase difference between a pure reactance and a pure resistance, the reactive and resistive components are drawn vectorially at right angles to each other. If the initial value of resistance is equal to R_2 then the total impedance of the series reactance-resistance network will be found by simple vector addition (see appendix). Therefore, the impedance for this first case, where the

resistance is equal to R_2, is equal to resultant vector Z_2 which is the result of the vector addition of X and R_2. The angle θ_2 that Z_2 makes with the horizontal line is the phase angle of the system. When the oscillator current flows through the series circuit of X and R (of Fig. 3-11) with R equal to R_2, the impedance Z_2 of the system brings about an instantaneous phase angle change between the oscillator current and output voltage, equal to θ_2.

If the value of resistance is increased from R_2 to R_3, the total impedance also will increase, and by vector addition this impedance is equal to the resultant vector Z_3 in Fig. 3-12. Once the resistance has increased, the phase angle will change, and from Fig. 3-12 the phase angle under these circumstances is equal to θ_3, which is less than that

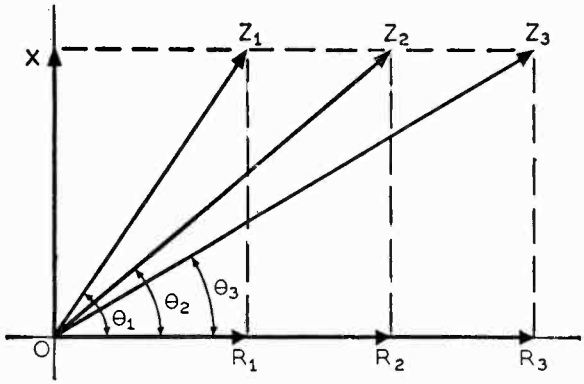

Fig. 3-12. Vector diagram showing the functioning of the circuit of Fig. 3-11. The phase angle θ varies inversely with change in resistance R and directly as the impedance Z.

angle involved when the resistance is lower. If the resistance is decreased, from the starting value of R_2 to R_1, the total impedance of the series XR circuit will likewise decrease. This decrease in impedance is represented by the impedance vector Z_1 in Fig. 3-12 which is the resultant vector of the vector addition of X and R_1. Under these circumstances the phase angle again changes, but this time it increases to a value equal to θ_1.

It is thus seen that the phase angle of the impedance network of Fig. 3-11, changes with change in resistance and, consequently, the crystal oscillator output is varied in phase and is said to be phase modulated. Further study of the vector diagram will reveal that the larger the value of R the greater will be the value of impedance, but the phase angle will approach zero degree, which means that the reactance X under this condition has negligible effect on the impedance and phase angle. If, conversely, the resistance gradually decreases to a smaller and smaller value, the impedance will also decrease ac-

cordingly, and the phase angle of the impedance will approach 90° but will never be greater. Under this circumstance the resistance will have negligible effect, and the impedance will be almost a pure reactance. From this analysis it is seen that the phase changes in the circuit of Fig. 3-11 will always lie between 0 and 90 degrees. This is tantamount to saying that the impedance vector (that resultant vector caused by the vector addition of X and R) of Fig. 3-12 can rotate anywhere between the horizontal resistance reference line and the vertical reactance line of X. Since these two lines are at right angles to each other, that is, 90° apart, the impedance vector can have phase angles only between 0 and 90 degrees, the exact value being determined by the instantaneous setting of the variable resistance R of Fig. 3-11.

A simple circuit like that of Fig. 3-11 not only can produce a p-m output, but also can be advanced to the point where the resistance R is made to vary in accordance with an input audio voltage. The circuit for such a system is illustrated in Fig. 3-13. The only difference be-

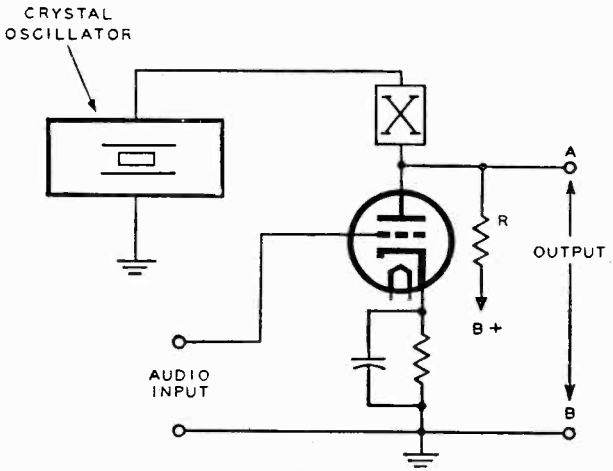

Fig. 3-13. A simple p-m circuit in which the variable resistance of Fig. 3-11 is replaced with a triode and a-f input signal. The effective resistance is the dynamic plate resistance of the tube in parallel with the load R.

tween the circuits of Figs. 3-11 and 3-13 is that the variable resistor in the former circuit is replaced by the triode tube in the latter. It must then follow, in order for the two systems to function in the same manner, that the triode tube and its associated network act as a variable resistance. This is exactly what occurs. The dynamic plate resistance of the tube in parallel with the load resistor R is the effective resistance between the low side of the reactance X and ground. This plate resistance is made to vary in accordance with the audio

input signal across its grid, and the plate resistance variation causes p.m. of the crystal oscillator frequency. It is more fully explained as follows:

Without any audio signal input to the triode, a definite amount of plate resistance exists which is determined by the fixed cathode bias and the plate voltage. (R can easily be made considerably larger than the plate resistance, in which case its effect is negligible.) As it now exists this system offers a *fixed* phase relation to the oscillator frequency. However, if an audio input signal is impressed across the grid, so that the tube is still operative on the linear portion of its i_b-e_c curve, the plate resistance will vary in accordance with the grid voltage, and this variation of resistance is, therefore, linear. That is, the plate current i_b will change accordingly as the instantaneous grid voltage is changed. In effect, then, the varying grid voltage, due to an audio signal, changes the existing value of the plate resistance of the triode, which then changes the instantaneous phase of the oscillator frequency in accordance with the audio signal. Thus, it is said that the oscillator frequency is phase modulated in accordance with the audio input signal. In the case just illustrated, the time-delay network is the reactance X in series with the dynamic plate resistance of the triode amplifier.

This network is one of the simplest types of phase modulators. There are other basic types, as previously mentioned, but they are too numerous to illustrate here. They are all generally the same in that they cause an instantaneous change in the phase of the oscillator output. In conclusion, then, we can say that in a p-m signal the frequency and amplitude of the carrier remain fixed, but there is an instantaneous change in the phase of the signal.

In direct f.m. the carrier or resting frequency of the oscillator is deviated on either side of its center position, the amount of deviation being determined by the amplitude of the audio signal. In p.m., the frequency of the oscillator has its phase deviated on either side of resting phase of the oscillator frequency. Concisely stated, frequency deviation exists in f.m. and phase deviation exists in p.m.

It might be well to mention that reactance tubes (not necessarily in quadrature operation) in conjunction with a crystal oscillator will cause p.m. Since the stability of the crystal frequency prevents the oscillator from being frequency modulated (that is, having frequency variations take place), the final result is that the phase of crystal frequency is changed in conformity to the changing reactance.

Automatic Frequency Control

As previously stated a form of reactance tube is used in a system called automatic frequency control (afc) to stabilize the center fre-

quency of the oscillator in f-m and a-m transmitters. This system is very important in that it uses a discriminator tube similar to those used in many f-m receivers. Afc circuits have also been used to some extent in a-m receivers where it was desired to stabilize the frequency of the receiver oscillator.

In the reactance tube modulator the audio input controlled the amount of reactance the tube injected into the oscillator circuit, thus causing a deviation in the center frequency of the oscillator. How then in an afc circuit employing a reactance tube, can an injected reactance be made to stabilize the oscillator frequency, when at other times it is used as a modulator to shift the frequency? This question warrants some careful consideration. To realize fully how afc works, it will be best to examine a circuit employing afc. Such a circuit is shown in Fig. 3-14, and it can be representative of either a transmitter or a receiver circuit. The output of the oscillator is connected to some kind of heterodyning system. In a superheterodyne receiver, the heterodyning system is the already existing converter arrangement. In a transmitter, a separate heterodyning system is employed in order to obtain the necessary i.f. used for the production of an afc voltage. The primary and secondary tuned circuits of transformer T_1 are resonant at the true i.f. of the system. Therefore, when the set is operating properly and the oscillator is stable, the operating i.f. will be at the center of the curve of discriminator transformer T_1. In this case, the operation of the discriminator is such that at point A there is zero voltage, and the only voltage on the grid of the control tube is the audio, which contains no d-c component. This means that with the oscillator stable the average injected reactance is of a constant value, and naturally the oscillator does not change its average (or center, or rest) frequency. That is, the so-called stable operating frequency of the oscillator takes into account the fixed average injected reactance of the control tube.

What happens when the oscillator shifts in frequency due to some instability? When the oscillator shifts in frequency it means that, in the process of heterodyning, the i.f. that is produced is not at the same frequency as that to which transformer T_1 is tuned. The result is that there are unequal voltages distributed across the two halves of the secondary of transformer T_1, which results in a *change* in the output of the discriminator at point A. This output voltage called the *control voltage* is fed directly to the control grid of the reactance tube, and this changes the effective bias on the grid from the steady voltage that had previously existed there. As a result the average plate current of the tube changes, in turn changing the average g_m of the tube. Since the g_m changes the reactance injected into the oscillator tank circuit,

the average frequency also changes. *The change in the injected reactance changes the average frequency of oscillations such that the oscillator returns to its original operating frequency and the oscillator becomes stable again.*

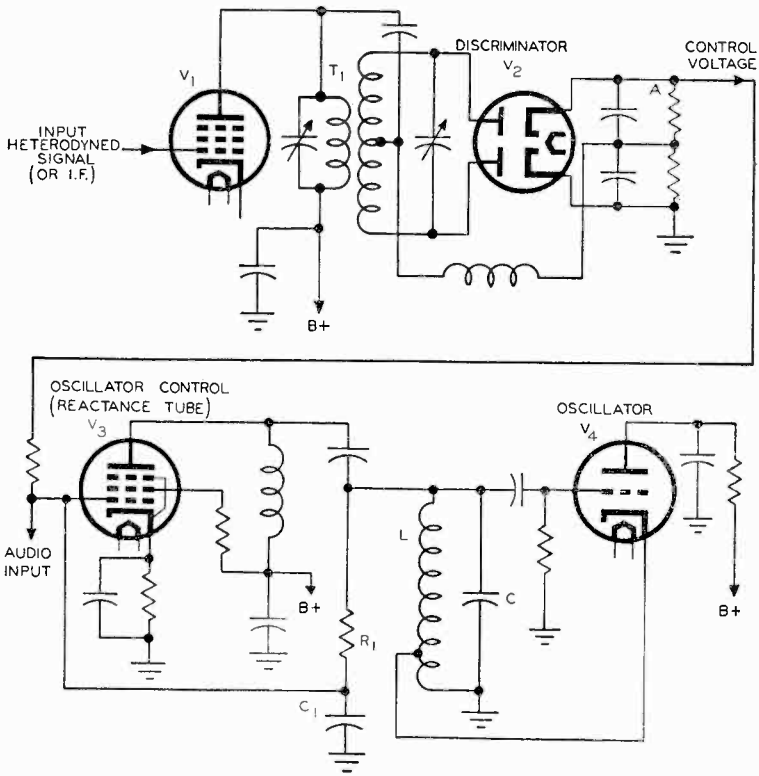

Fig. 3-14. An automatic-frequency-control circuit, which can be representative of being used in either a transmitter or receiver.

In the circuit shown in Fig. 3-14 the injected reactance is inductive and is inversely proportional to the transconductance of the reactance tube. (See part (B) of Fig. 3-7.) The heterodyning system used with Fig. 3-14 is assumed to be working with the frequency of the oscillator (tube V_4 in Fig. 3-14) *above* the other signal used for the process of heterodyning. If the oscillator suddenly becomes unstable and *decreases* in frequency, the operating i.f. also *decreases* in frequency. The discriminator circuit then functions so that at point *A*, a *positive* voltage appears. The magnitude of the voltage depends upon the number of cycles the oscillator is off tune. Therefore, the effective bias (due to the cathode voltage) on the control tube is *decreased*. This

decrease in bias increases the g_m of the control tube. With the g_m increased, the injected inductance is *decreased*. This is true because the injected inductance for the circuit of Fig. 3-14 is equal to R_1C_1/g_m [See Fig. 3-7 part (B)]. Hence, the injected inductance that appears across the *LC* oscillator tank circuit is *decreased* from the value it had before the oscillator became unstable. If with two inductors in parallel we reduce the value of one of them, the total effective inductance also decreases.

This is what happens in the control tube-oscillator circuit. An injected inductance exists across the *LC* oscillator tank even when the oscillator is stable. The stable resonant frequency to which the set is tuned is determined by the capacitance *C* of Fig. 3-14 and the combined parallel inductance of *L* and the injected inductance. (This was indicated in the section on reactance tube modulators.) Consequently, if the injected inductance is decreased, the total effective inductance is also decreased, and, since the frequency of operation is inversely proportional to inductance ($f = 1/2\pi\sqrt{LC}$), the frequency of oscillations increases. What has happened is that a detuning, or instability of some sort in the oscillator frequency, affects the reactance or control tube so that it injects a reactance across the oscillator tank circuit different from that already existing there. The amount of this injected reactance is determined by the amount of oscillator instability (that is, how many cycles off frequency), and the change in the total effective inductance is such that it stabilizes the oscillator frequency to the same frequency to which it was tuned before it drifted off frequency. In the case under discussion the value of the injected inductance was just enough to increase the frequency of the oscillator back to its stable position.

On the other hand, if the oscillator became detuned and increased in frequency, the afc system would function to decrease the frequency of the oscillator back to its original value. The way the system functions with an increase in oscillator frequency is as follows:

The i.f. increases, which in turn causes a change in polarity of the control voltage at point *A* in Fig. 3-14. The polarity of this control voltage becomes negative with respect to ground, and a negative voltage is impressed on the control grid of the reactance tube. This increases the bias on the tube, which in turn decreases the g_m of the tube. The decrease in g_m causes the average injected inductance to increase, in turn increasing the total parallel inductance determining the average frequency of oscillations. When the total inductance increases, the carrier frequency decreases, and the decrease is such that it returns the oscillator to its normal operating position. The accompanying Table 2 explains how the afc system of Fig. 3-14 works when the oscillator frequency becomes unstable and either increases or decreases away from its stable operating frequency.

TABLE 2

*Oscillator Frequency**	*Decreases*	*Increases*
Intermediate frequency (i.f.)	Decreases	Increases
Polarity of control voltage	Positive (+)	Negative (—)
Bias on control tube	Decreases	Increases
G_m of the control tube	Increases	Decreases
Injected inductance $L_I = C_I R_I / g_m$	Decreases	Increases
Total effective inductance $L_t = \frac{L \times L_I}{L + L_I}$	Decreases	Increases
Frequency change $f = \frac{1}{2\pi\sqrt{CL_t}}$	Increases	Decreases

*Under the assumption that the oscillator is tuned above the frequency of the other signal. If the oscillator is tuned below this other signal, then one would interchange columns two and three below the first line.

In f-m transmitters that employ a system of afc, the circuit is often called a "center-frequency stabilizing" circuit. The signal frequency that is used to perform the heterodyning with the oscillator signal is usually crystal controlled to make sure that one of the frequencies of heterodyning is very stable. It might be suggested that the master oscillator in the transmitter be crystal controlled itself in order to stabilize the frequency. This cannot be done in direct f-m transmitters where the frequency of the oscillator must be "loose" and able to deviate away from its center frequency as caused by the action of audio modulating signal.

Frequency Multiplication

Up to this point we have dealt with reactance tubes and different types of modulator-oscillator circuits. We have also discussed automatic frequency control in which a reactance tube is used to stabilize the center frequency of the oscillator. Frequency deviation with respect to the audio and oscillator signals was also analyzed. What has not been investigated is the actual frequency of the master oscillator with respect to the final transmitted frequency. In this respect we have not analyzed exactly how the 75-kc maximum allowable peak deviation is obtained. Is it produced directly at the oscillator stage and if not, how does it get to such a high value? The final output signal from an f-m or p-m transmitter is quite different from that produced at the oscillator-modulator stage. It might be thought that after the oscillator-modulator stage, the f-m and p-m transmitters are exactly like the a-m transmitter, in that frequency multiplication stages and amplifying stages follow and that all systems function the same after this point. The truth of the matter is that frequency multiplication is

not considered a necessity in a.m., whereas it is considered a necessity in an f-m or p-m system in order to obtain a good f-m signal (especially in wide-band f.m.).

In the f-m and p-m transmitter block diagrams shown in parts (B) and (C) respectively, of Fig. 1-14 of chapter 1, the stages following the oscillator-modulator stage are those of frequency multiplication. Why is frequency multiplication needed in f.m. and p.m.? This question will be answered, along with many others on frequency multiplication, in the ensuing discussion.

Before examining the need for frequency multiplication, it will be wise to review a few features of frequency multiplication in general. As was pointed out previously, frequency multipliers are used in a-m transmitters for the primary purpose of increasing the frequency of the local transmitter oscillator. This is also one of the reasons why they are used in f.m., but there is another equally important reason, as will be seen later.

Some details of the way these so-called frequency multipliers increase the frequency introduced into the grid should be explained. Frequency multipliers are, in effect, harmonic generators. That is, a number of different frequencies exist within the frequency multiplier tube. These comprise the frequency input to the tube, which is considered as the fundamental frequency, plus numerous harmonics of this fundamental frequency. Consequently, if the output circuit of the frequency multiplier is so adjusted that it can choose any harmonic it desires, while being unselective to all other frequencies, this tube then acts as a harmonic generator. This is more clearly seen if we examine the circuit of Fig. 3-15.

Transformer T is tuned to an input frequency f, which is impressed across the control grid. This frequency is called the fundamental fre-

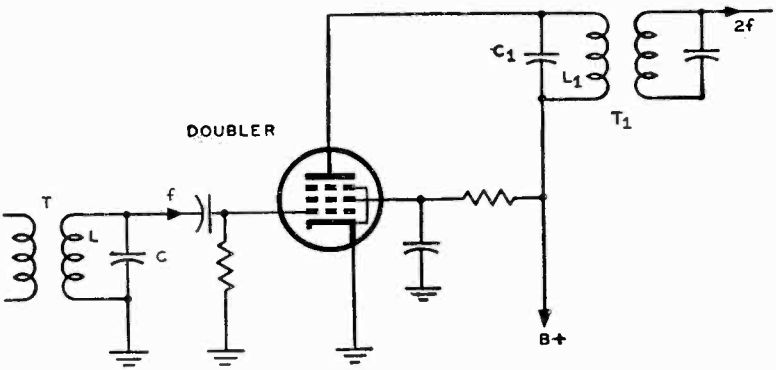

Fig. 3-15. A frequency-doubler circuit has its input transformer T tuned to some frequency f and its output circuit T_1 adjusted to $2f$, the second harmonic, the tube operating as a class C amplifier.

quency of the system. If the voltages on the tube are so adjusted that the tube functions as a class C amplifier, the plate current of the tube will be rich in harmonics of the input frequency. If, in the output stage of the tube, a tuned circuit T_1 is placed, which is sharply tuned to the second harmonic, only this second harmonic will be selected by the L_1C_1 circuit. In other words the resonant frequency of L_1C_1 is twice that of the tuned circuit of LC. Consequently, the frequency that appears in the secondary of T_1 is equal to $2f$. When a tube functions so that its output circuit is tuned to the second harmonic, the tube is called a doubler. If the output circuit is tuned to the third harmonic, the tube is called a *tripler,* and if it is tuned to the fourth harmonic, it is called a *quadrupler.* The doubler is the most common of the types of multipliers in existence, the tripler next, and the quadrupler last. Even though frequency multiplication can go beyond the quadruple stage (that is, working in the fifth harmonic and higher), it is impractical to use any higher than this quadruple stage in transmitters.

It was stated that with the proper voltages on the tube, it would operate as a class C amplifier and the plate current would be rich in harmonics. Let us for a moment look into the analysis of class C operation as applied to harmonic generators. In Fig. 3-16 is illustrated a typical plate current-grid voltage characteristic curve of a class C amplifier (i_b-e_c curve.) A class C amplifier, by definition, is one which has its grid bias much greater than cutoff, so that plate current flows only when an alternating voltage is applied to the grid and this flow is for less than one-half cycle of the a-c grid voltage. This means that the plate current flows in short pulses.

The bias (E_c) shown in Fig. 3-16 is equal to twice the cutoff. The

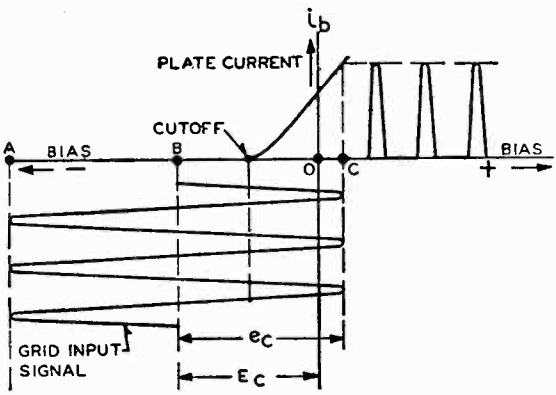

Fig. 3-16. A plate current-grid voltage characteristic curve of a tube operating as a class C amplifier, which is one that has its grid bias greater than cutoff. Plate current flows in short pulses when an alternating voltage is applied to the grid.

alternating voltage applied to the grid has a peak value, designated as e_c, which is greater than the bias on the tube; hence, the grid is driven positive during a portion of this input grid signal. Only during the

portion of the alternating grid signal that is greater than the cutoff value of bias will plate current flow. Since appreciably less than half of this input grid signal is greater than the cutoff bias, the plate current will flow only during this portion of grid signal. Consequently, the flow of plate current is also appreciably less than half a cycle, as is evident from Fig. 3-16. This flow of plate current is, therefore, in pulses, and the strength of these pulses depends upon the strength of the alternating grid voltage. The plate current, flowing as it does in pulses, is rich in harmonics, and once the tank circuit in the output of the tube is adjusted properly, it can be selective to any harmonic desired.

There are other types of harmonic generators, but in the frequency multiplication stages of f-m transmitters the type of multiplication generally employed is that utilizing class C amplifiers.

More than one frequency multiplication stage can be used. The amount of multiplication and the number of stages required is deter-

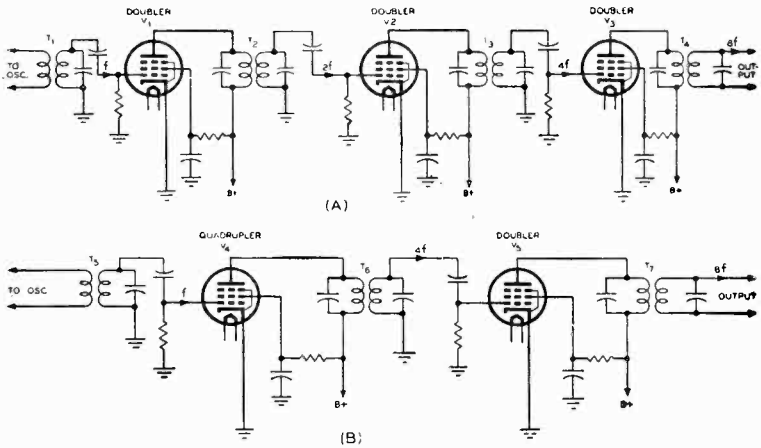

Fig. 3-17. Oscillator frequency can be multiplied eight times by either of these circuits: (A) in which each of the three tubes is a frequency doubler and (B) wherein the first tube multiplies the frequency four times (quadrupler) and the other tube is a doubler.

mined by the transmitter oscillator frequency and output frequency of the transmitter. For instance, the oscillator in a transmitter may operate at a fundamental frequency f, equal to 100 kc, and it is desired that the transmitter have a frequency of transmission equal to 800 kc. To obtain the correct output frequency two different combinations of multiplication are possible and these are illustrated in Fig. 3-17.

In part (A) three multiplication stages are used. Each stage em-

ployed functions as a doubler and has its output tank circuit tuned to the second harmonic of the input signal to the grid of the same tube. Transformer T_1 is tuned to the fundamental frequency f (100 kc) of the oscillator. The first doubler tube V_1 being operated class C has its plate current flow in pulses and, therefore, is rich in harmonics. Transformer T_2, in the output circuit of tube V_1 and across the input circuit to tube V_2, is tuned to the second harmonic of the oscillator frequency, and consequently it is highly selective to this second harmonic. By transformer action this new frequency, now equal to $2f$ or 200 kc (the second harmonic of f) is impressed across the grid of tube V_2. This tube is also operated class C, and its plate current is rich in harmonics. Transformer T_3 is tuned to the second harmonic of the input signal of tube V_2, namely the signal equal to $2f$, or 200 kc, and the tube functions as a doubler in that the output frequency is twice that of input. The input frequency is equal to $2f$ or 200 kc, and the output frequency from T_3 is equal to $4f$ or 400 kc. Which is to say that transformer T_3 is tuned to the fourth harmonic of the oscillator.

Output signal $4f$ or 400 kc is transformer coupled to the next tube, V_3, which also acts as a doubler. This means that transformer T_4 is tuned to twice the input signal to tube V_3. Since the input signal to this last tube is equal to $4f$ or 400 kc, the output signal from this stage is equal to $8f$ or 800 kc, which is the required transmitting frequency. This is equivalent to saying that transformer T_4 is tuned to the eighth harmonic of the oscillator.

This result can also be obtained with the two-stage frequency multiplication system of part (B) of Fig. 3-17. In this system the first tube acts as a quadrupler and the second tube as a doubler. Both tubes function under class C operation, and hence the plate currents of both are rich in harmonics. The input signal to the first stage, tube V_4, is from the oscillator and equal to 100 kc or f. The tuned transformer, T_6, in the output of this stage is resonant at the fourth harmonic of this input signal, and consequently a signal of frequency equal to $4f$ or 400 kc is impressed across the grid of tube V_5 by transformer action of T_6. The transformer T_7 in the output circuit of tube V_5 is tuned to the second harmonic of the input signal to tube V_5, so that the final output signal is equal to $8f$ or 800 kc which is the same result as that obtained in the former case.

Thus, it is readily seen how frequency multiplication can take place. The frequency involved in the foregoing problems is an unmodulated carrier. This is typical of a-m transmitters where the modulation takes place *after* frequency multiplication. In f-m and p-m transmitters the modulation takes place *before* the frequency multiplication stage. There is a definite reason for having the frequency multiplication stages so arranged. The reason for this will become evident in the next section.

The Need for Frequency Multiplication

Amplitude modulation is primarily concerned with two types of frequencies — namely, the carrier frequency which exists at any one instant and the modulating audio frequency. In f.m. we are concerned with another frequency besides the two associated in a-m systems. This other frequency is known as the deviation frequency. (In p-m systems instead of the deviation frequency we are concerned with a phase deviation.) In f-m transmitters the importance of frequency multiplication is twofold. One use is to increase the instantaneous value of the oscillator frequency, and the other to increase the amount of frequency deviation. (In a p-m system, it is the phase deviation or its equivalent frequency deviation which must be increased besides the oscillator frequency.) In direct and indirect f.m. the final transmitted frequency is quite high. In the old f-m band it was anywhere from 42 to 50 mc, whereas in the new band it is more than twice as high, being anywhere between 88 and 108 mc. If a variable frequency oscillator (vfo) were to produce such high frequencies, the oscillator would be extremely unstable at these high frequencies. The slightest amount of instability may throw the oscillator off by a very small percentage and around 100 mc this percentage of instability is quite a number of kilocycles. Consequently, the oscillator works at a much lower frequency, and by the use of frequency multiplication the necessary frequency of transmission is reached.

Some might make the suggestion that automatic frequency control, afc, be employed at these high oscillator frequencies to prevent oscillator drift. The idea, although well founded, is not applicable to oscillators at these high frequencies. While an afc circuit may stabilize oscillator drift, the afc circuit itself is not 100 percent perfect, and, when operated at 100 mc, it does not provide sufficient stability.

Crystal controlled oscillators are not used at these high frequencies (even though crystal oscillators are very stable) because it is a practical impossibility to manufacture crystals to operate at such high frequencies. Therefore, even with crystal controlled oscillators employed in transmitters (especially p-m transmitters), frequency multiplication has to be used to increase the fundamental frequency of the oscillator to the desired frequency of transmission.

If frequency multiplication were employed only to increase the oscillator frequency, as in a.m., the problems would easily be solved. However, we have to take into account the deviation of the oscillator signal in frequency when f.m. is used and in phase when p.m. is used. When modulation occurs in either direct or indirect f.m., the deviation of the center frequency of the oscillator is not so great as is necessary for the final output signal from the transmitter. In other words, the desired frequency deviation (or phase deviation) as required for proper f-m broadcasting cannot be obtained directly from the modu-

lator. Hence, to overcome this difficulty, frequency multiplication is used to increase the amount of deviation.

The final result is that frequency multiplication, as employed in f-m transmitters, serves two purposes. It increases the center frequency of the oscillator to the desired value for transmission, and, at the same time, it increases the amount of deviation (frequency or phase swing) of the center frequency of the oscillator to that necessary for correct transmission.

Increase of the deviation is the important problem in frequency multiplication of f.m. It is the deviation that determines the effective bandwidth of the transmitter. Most commercial transmitters today operate on the basis of 75-kc peak deviation for 100 percent modulation, as standardized by the FCC. This means that the peak-to-peak deviation is 150 kc. This type of f.m. is known as *wide-band f.m.* When there is reference to *narrow-band f.m.* it means that the frequency deviation used is much smaller than that employed in wide-band f.m. More will be said about narrow-band f.m. in the next chapter.

Understanding how the deviation frequency is multiplied along with the instantaneous oscillator frequency entails some knowledge of the character of the deviation frequency. We know that the amplitude of the audio modulating signal determines how far the center frequency of the oscillator will shift in frequency, which shift is commonly known as the frequency deviation of the center frequency. At any one instant of time, within the range of frequency deviation, there exists a value of frequency called the instantaneous frequency. The difference between this instantaneous frequency, call it f_I, and the center or resting frequency, call it f_c, of the oscillator is called the deviation frequency f_d. At any *one* instant of time, f_d can have only one value. In frequency multiplication it is *the instantaneous frequency,* f_I, which is multiplied because it is an inherent part of the f-m wave. This means that both f_c and f_I are effectively multiplied by the same amount; and therefore, the deviation frequency, at any one instant of time, is multiplied by the same amount. For example, supposing that the center frequency, f_c, of an f-m signal is equal to 100 kc and that, at a certain instant of time, the instantaneous frequency, f_I, is equal to 105 kc, then the deviation frequency, f_d, would be:

$$f_d = f_I - f_c = 105 - 100 = 5 \text{ kc}$$

If this f-m signal is impressed across the grid of a tube that is operating as a doubler, then, in the output circuit of this tube, the center frequency of the carrier will be doubled, and the new frequency equal to $2f_c$. Similarly, the new instantaneous frequency is equal to $2f_I$. The deviation frequency at the output of this doubler stage is the difference between the center frequency and the *instantaneous frequency* that *exists* at the output of this stage at the par-

ticular instant of time under discussion. Under these circumstances the deviation frequency at the output of the doubler stage is equal to:

$$2f_I - 2f_c$$

or $$2 \times 105 - 2 \times 100$$

or $$210 - 200 = 10 \text{ kc}$$

From this analysis it is obvious that the amount of deviation frequency is multiplied by the same amount as the resting frequency of the oscillator and the instantaneous frequency, no matter what type of multiplier is used. It is, therefore, seen that modulation in f-m transmitters takes place before frequency multiplication because the deviation frequency, also, has to be increased.

If the center frequency of an oscillator is equal to 12.5 mc and the desired frequency of transmission for f.m. is 100 mc, a total multiplication of 100/12.5 or 8 times the oscillator frequency is needed. If the peak frequency deviation of the 12.5-mc center frequency is equal to 7.5 kc, the peak-to-peak swing of the deviation frequency is equal to 15 kc. Upon the proper multiplication, the final output peak-to-peak deviation will be $15 \times 8 = 120$ kc. This means that, for the system above, the final output center frequency is equal to 100 mc after multiplication, and the peak-to-peak frequency deviation of the 100-mc signal is equal to 120 kc.

The multiplication system that performs this increase in carrier frequency and deviation can be either three doublers or a quadrupler and a doubler. After the initial stage of frequency modulation in the former case, the f-m signal is at a center frequency value of 12.5 mc with a peak frequency deviation of 7.5 kc. The true frequency extremes of the signal are 12.5 mc plus 7.5 kc and 12.5 mc — 7.5 kc or in more concise mathematical terms 12.5075 and 12.4925 mc. If the latter type of multiplication is employed, then after the quadrupler stage the frequency extremes would be 4×12.5075 and 4×12.4925 mc or 50.03 and 49.97 mc. Therefore, at the input to the doubler stage the peak-to-peak frequency deviation is equal to 50.03 mc — 49.97 mc = 0.060 mc or 60 kc. After the doubler stage, the final output frequency extremes would be 2×50.03 and 2×49.97 or 100.06 and 99.94 mc. The final peak-to-peak deviation frequency would then be equal to 100.06 mc — 99.94 mc = 0.120 mc or 120 kc which is the required amount, as indicated in the preceding paragraph. This means that the final f-m wave of a carrier frequency of 100 mc is swinging 60 kc on either side due to the amplitude of the audio modulating frequency and amount of multiplication employed.

A similar numerical analysis relative to indirect f.m. or p.m. can be shown to exist. However, it suffices to say that frequency multipliers also multiply the amount of phase shift or phase deviation that occurs in these types of transmitters.

Amplitude to Phase to Frequency Modulation

At this point we are prepared to study some of the oscillator-modulator stages besides the simple ones already studied, that are found in f-m transmitters. In this respect the Armstrong system of modulation will be analyzed first. However, before analyzing the Armstrong system, a few facts not previously discussed about a.m. and f.m. should be brought to light. These concern the relation between the sidebands and the center frequency component of both modulated waves under the conditions of a slight amount of modulation.

In chapter 2 it was pointed out that, when the modulation index or deviation ratio is small, the number of effective sideband pairs is likewise small. Referring back to Table 1 in chapter 2, it is noted that when the modulation index is less than ½ there is only one effective sideband pair, that is, one sideband on either side of the center frequency component. Thus the components of the f-m wave when the modulation index is below ½ are similar to those of a.m. in which only one pair of sidebands appears, no matter what the percentage of

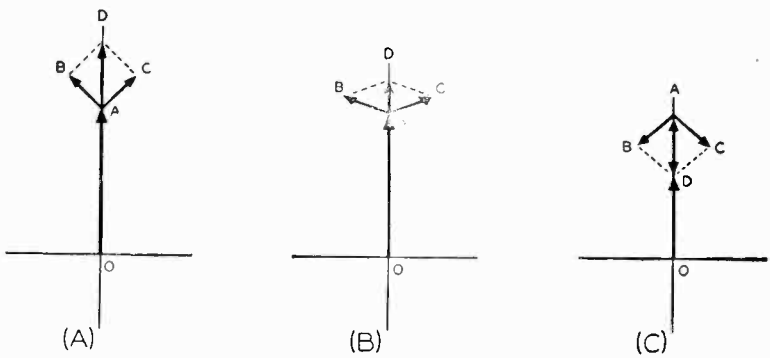

Fig. 3-18. In an a-m signal, the addition of the two sidebands is such that the double sideband (vector *AD*) when added to the carrier (vector *OA*) will produce a resultant signal (vector *OD*) constant in phase in all cases.

modulation. If the degree of modulation in f.m. is kept small enough, it is possible to have the frequency and amplitude of the sidebands and center frequency component of an f-m signal equal to those components of an a-m wave. However, a difference does exist in the phase relation between the respective sidebands and the center frequency components. If the two sidebands of the f-m wave are added together and if the two sidebands of the a.m. are also added together, in both instances a new wave will appear known as the *double sideband* signal. These double sideband waves represent the difference between the modulated waves and their respective center frequency components. Both double sideband waves would appear to be identical under

the assumption that the individual sidebands for both types of modulation are equal in frequency and amplitude.

For the a-m case the addition of the two sidebands is such that the final combined sideband signal is in phase with the carrier frequency. This is illustrated vectorially in Fig. 3-18. In parts (A), (B), and (C) of this figure, vector *OA* represents the peak amplitude of the unmodulated carrier, vectors *AB* and *AC* represent the peak amplitudes of the two sidebands, *AD* represents the amplitude of the double sideband, and *OD* is the final resultant a-m wave. The individual sidebands (*AB* and *AC*) in an a-m wave rotate about the tip of the *OA* vector. Consequently the resultant double sideband (*AD*) can be additive or subtractive from the carrier, in which case the final resultant wave will be of constant phase but will vary in amplitude

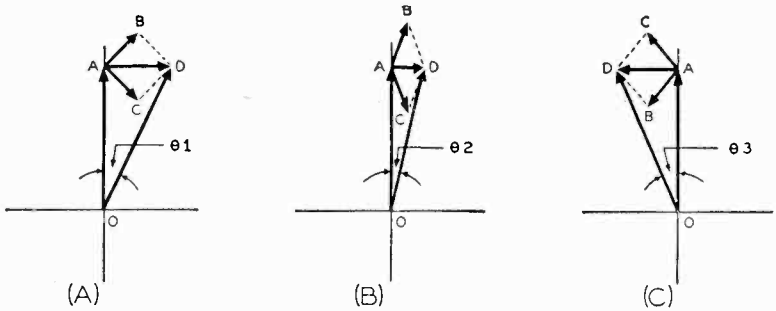

Fig. 3-19. In an f-m signal, the double sideband (vector *AD*) is 90° out of phase with the carrier (vector *OA*). The resultant vectors are never smaller than that of the carrier.

according to the amplitude of the double sideband. For instance, in parts (A) and (B) of Fig. 3-18 the combined sideband is additive to the carrier, resulting in an increase in amplitude (with part (A) greater than part (B)), but the phase of the final wave remains the same. These two vector diagrams are representative of the a-m wave where the amplitude of the wave is *greater* than that of the carrier. The vector diagram of part (C) of Fig. 3-18 is typical of that portion of the a-m wave where the amplitude is *less* than that of the carrier. In this latter vector diagram, the amplitude of the vector representing the double sideband is subtracted from that of the carrier and a smaller amplitude results but the phase relationship of the resultant wave *OD* is still the same.

In f.m., even though the frequencies and amplitudes are equal for small deviation ratios, as previously specified, the situation is different from that of a.m. The double sideband is 90° out of phase with the carrier and this makes the situation considerably different from a.m. The vector representations are illustrated in Fig. 3-19. In these dia-

grams the carrier, the sidebands, and the double sideband all are of the same length as those in Fig. 3-18. The double sideband vector *AD* of Fig. 3-19, in all cases, is 90° out of phase with the carrier vector *OA*. Consequently, the final resultant signal vector, *OD* is not always of the same phase with the carrier. In fact, the magnitude of the combined sideband vector *AD* is the determining factor in the change in phase of the resultant vector *OD* with respect to the carrier *OA*. This is readily noted in Fig. 3-19 where the phase angle for each part differs from the others. In part (A) of Fig. 3-19 the resultant vector *OD* is said to be lagging the carrier *OA* by an angle equal to θ_1. In part (B) the resultant vector *OD* is still lagging the carrier *OA* but by a smaller angle equal to θ_2. In part (C), the resultant vector *OD* is leading the carrier *OA* by an angle equal to θ_3. The interesting thing in this case of f.m. is that the resultant vectors are never smaller in amplitude than the carrier.

It has just been demonstrated how the same carrier frequency and double sideband component can cause either a.m. or f.m. In either case, the modulation is slight, especially in f.m. where only one sideband pair appears. This analysis provides a ready method of changing or converting a.m. to indirect f.m. A carrier signal is first amplitude modulated slightly and the sidebands are separated from the center frequency component. That is, the center frequency component is separated from the modulated signal, and all that remains is the double sideband. This double sideband then is passed through a time-delay network that shifts it in phase by 90°. If this phase-shifted double sideband is combined with the original carrier wave, a frequency-modulated wave results. In terms of the vector diagrams, the double sideband vector *AD* in parts (A), (B), and (C) of Fig. 3-18 is shifted in phase by 90° to yield the vector diagrams in parts (A), (B), and (C) of Fig. 3-19, respectively. This means that with an a-m wave phase shift is employed so that the final resultant wave will be equivalent to a p-m wave. This is the basic principle upon which the Armstrong transmitter operates.

The resultant vector *OD* in Fig. 3-19 varies in *both* amplitude and phase with respect to the carrier frequency. This variation in amplitude is undesirable in true phase modulation. It was stated previously that in p.m. only the phase is varied, while the amplitude of the modulated signal remains constant. In order to utilize properly the effect of a small amount of a.m. to obtain p.m., the amplitude variations in this final resultant p.m. have to be eliminated. This will be discussed in the next chapter.

The Armstrong System

Since the most important contributions to the field of f.m., as in most other fields, are the first accepted designs and accomplishments in the

field, it follows that a discussion of them is in order. There is no need for elaboration about the man who is generally conceded to have made f.m. a commercial reality. The name of Armstrong is as well known in the field of f.m. as that of Lee DeForest in the field of radio tubes. Of course, these men are not the only ones who had ideas that led to f.m. and the multielement vacuum tube in use today. On the contrary, the history of the pioneering in these fields antedates them. The most consideration is given, however, to the man who invents the first system that works and has commercial possibilities. In this respect Armstrong is the leader in the field of f.m.

The Armstrong system received quite a lot of attention because it was the first transmitter allowed to operate by permission of the FCC. The Armstrong system is not direct f.m. but rather indirect f.m., in which a shift in phase is used as the basis for obtaining the final f-m wave. The method involved was basically outlined in the previous section. In this section we will analyze the basic Armstrong system in block diagram form, and in the next chapter study some of the individual circuits comprising the system.

Fig. 3-20 is a block diagram of the *original* Armstrong transmitter as operated on the old f.m. band. Although the transmitter in operation today is somewhat different (as will be seen in the next chapter) the basic theory is essentially the same in both cases. That portion of

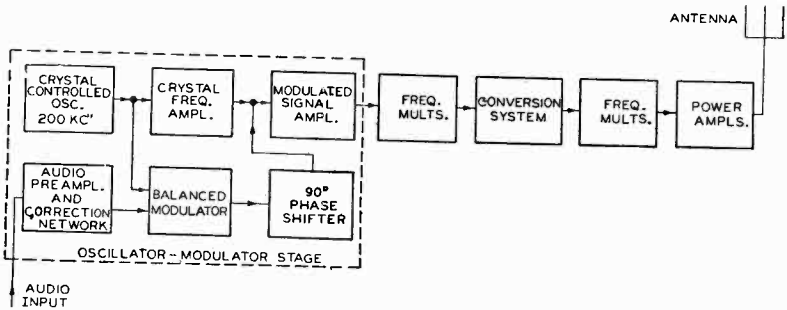

Fig. 3-20. Block diagram of the original Armstrong f-m transmitter. The complete oscillator-modulator stage is shown inside the dashed box. Note that a frequency conversion system exists between the frequency multipliers stages.

the transmitter of Fig. 3-20 enclosed in the dashed box is the complete oscillator-modulator section. Its basic action is similar to that described in the preceding section. A carrier frequency of 200 kc is obtained from a crystal controlled oscillator. Such an oscillator offers good frequency stability compared with the variable frequency oscillators.

The output of this oscillator is fed into two different stages. Part of

this carrier frequency signal is fed directly into an amplifier called the *crystal frequency amplifier* and part is applied to the input stages of a *balanced modulator*. If an audio signal of constant frequency is impressed across the audio input section, it will also, after passing through a preamplifier and correction network (the function of which will be explained later on), be applied to the balanced modulator network. This balanced modulator is effectively in operation only when both the audio signal and the crystal carrier frequency are applied to it. The audio frequency then *amplitude modulates* the carrier frequency within the balanced modulator. The modulation is very slight (that is, percentage small) with the result that the sidebands are quite small in amplitude. The balanced modulator is so arranged that the center frequency component of this a-m signal is suppressed and only the double sideband component of the a-m wave appears in its output circuit. The upper and lower sideband components are combined (that is, added) to form the new signal designated as the double sideband. This double sideband contains all the intelligence of the modulating signal. If, at one instant of time, the audio signal is equal to 1 kc, the two effective sidebands that are formed in conjunction with the 200-kc carrier signal are 200 + 1 kc and 200 — 1 kc, or 201 and 199 kc respectively. In terms of double sidebands, the double sideband relative to this numerical situation is the combination of a 201-kc signal and a 199-kc signal, under the conditions of equal amplitudes for each.

At the output of the balanced modulator, the double sideband has the relation to the carrier frequency shown in the vector diagrams of Fig. 3-18, where vectors *AD* represent the double sideband. This output from the balanced modulator, being free of the center frequency component of the a-m wave, is applied to a phase-shifting network. This latter network introduces a time delay to the double sideband output of the modulator that shifts the sideband in phase by 90 degrees. At the output of the phase-shifting network, the double sideband signal has the relation to the carrier frequency illustrated by the vector diagrams in Fig. 3-19, wherein vectors *AD* represent the double sideband and vectors *OA* the carrier. The phase-shifted double sideband signal then is applied, together with the amplified crystal carrier frequency, to another amplifier. In this stage these two signals are combined to give essentially a p-m signal. This is indicated vectorially in Fig. 3-19. From this stage the new p-m signal is applied to a system of frequency multiplication and conversion in order to obtain the necessary deviation and carrier frequency output.

The foregoing analysis was based on the assumption that the audio modulating signal is constant in frequency. In this instance only the amplitude of the audio signal is a determining factor in the amount of phase deviation. However, if the frequency of the audio were varied, this would cause a change in the amount of frequency deviation pro-

portional to the modulating frequency. This is an undesired characteristic because it was stated that in p.m. *only* the amplitude and not the frequency of the audio should vary the amount of phase deviation. Since the audio frequencies involved in speech and music are by no means constant but vary over the complete audio range, there must be some means to prevent this variation of audio frequency from causing an increase or decrease in the amount of deviation. This is accomplished by the *audio correction network,* which is in the audio part of the system preceding the balanced modulator. This network effectively makes the p-m signal equivalent to an f-m signal.

Each vector *OD* in the vector diagrams of Fig. 3-19 represents the resultant p-m signal. It is seen that these vectors vary in amplitude as well as phase. To insure negligible distortion, the phase angle changes are made very small. If the phase deviation exceeds a certain value, distortion will result. This puts a limit on the strength of the double sideband, because the carrier, when added to the double sideband, controls the amount of amplitude and the phase of the resultant signal. To maintain linearity between modulating voltage and angular deviation, the amplitude of the double sideband is made very small compared with the carrier, so that the resultant p-m signal has an insignificant variation in amplitude. The amplitude limiting action of the following frequency multiplier stages will clean up most of this amplitude variation.

In the Armstrong system, as operated today, the initial amount of phase deviation is so adjusted that for 100 percent modulation (75-kc output peak deviation) the peak phase deviation for an audio frequency of 50 cycles is 11.06°, and this produces an output that is *below one percent distortion.* The curve of Fig. 3-21 will make this clearer. This figure is a curve of initial peak phase deviation versus the percentage of output distortion. The system is so arranged that it operates at point *A* on the curve where, for an initial peak phase deviation of 11.06°, the distortion is approximately 0.9 percent. To find the exact amount of frequency swing that is equivalent to this phase swing of 11.06°, the lowest audio frequency that the set is designed to pass is multiplied by the amount of peak phase shift in *radians.* What has to be done is to change the 11.06° into radians. (One radian is equivalent to 57.3°.) Therefore we have:

$$\text{Peak frequency swing} = 50 \text{ cycles} \times \frac{11.06^\circ}{57.3^\circ}$$

$$\text{Peak frequency swing} = 50 \times .193$$

$$= 9.65 \text{ cycles}$$

Thus, for a minimum audio modulating frequency of 50 cycles (at less than one percent distortion), the 11.06° peak phase deviation is equal to a peak frequency deviation of 9.65 cycles. At first this small

amount of frequency deviation makes it appear as though a tremendous amount of multiplication is needed to obtain the necessary 75-kc deviation for 100 percent modulation. This was true in the case of the original transmitter, but in the new Armstrong transmitter the actual

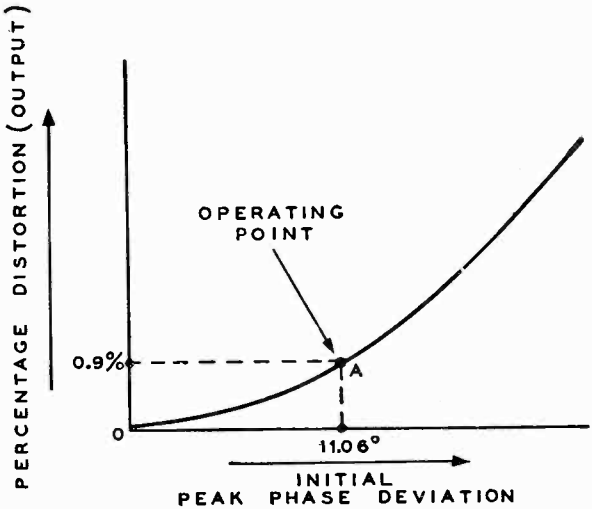

Fig. 3-21. Initial peak phase deviation plotted against percentage of distortion in the output.

amount of multiplication stages have been cut down. This will be seen in the next chapter. In the original system for a peak frequency deviation output of 75 kc, the 9.65 cycles would have to be multiplied approximately 7500 times. However, this would indicate that the original crystal oscillator frequency of 200 kc, if passing through all these multipliers, would be multiplied out of the broadcast range of the f-m bands. In other words the 200-kc crystal frequency multiplied 7500 times would result in an output carrier frequency of 1500 mc, which is nowhere near the frequency band allotted to f-m broadcasting, either on the old band or the new band.

It has just been explained that the crystal oscillator frequency cannot be multiplied as many times as the frequency deviation. If the same number of multipliers are used for the crystal oscillator frequency, how then is this effect of high carrier frequency output prevented? This is accomplished by heterodyning down the carrier frequency after it has passed through a number of multiplication stages, as is seen from the block diagram of Fig. 3-20. The conversion system, appearing between a series of two multiplier stages, has two signals injected into it. One signal is obtained from a fixed crystal oscillator within the conversion block, and the other is the f-m signal obtained

after passing through a number of multiplication stages. These two signals beat together, and in the output circuit of the converter is a selective intermediate frequency network which selects only the difference frequency between the two. A new f-m signal decreased in center frequency then appears at the input to the other multipliers, so that, when multiplied by the rest of the multipliers, the final carrier frequency output will be the exact frequency of transmission required. The whole crux of the situation is that the amount of frequency deviation is not changed by the system of conversion, thus enabling the correct carrier frequency and frequency deviation to be at the output of the transmitter.

To obtain the necessary f-m output signal, the amount of p.m. that is procured is made inversely proportional to the frequency of the modulating audio signal. This is taken care of by the audio correction network, the analysis of which is given in the next chapter.

Other Transmitter Stages

Up to this point we have dealt with those parts of the f-m transmitters that are essentially different from those of the a-m transmitter. The primary differences centered around the modulator, oscillator, and multiplication stages. These stages of f.m. are really the most important in the transmitter, because their purposes are so very different from those actually employed in a-m transmitters. The stages following the multiplication system in f.m. are very similar in circuit operation to those in a.m. These are the intermediate power amplifier and power amplifier stages.

One of the chief differences between the a-m and f-m power amplifier stages is that in a.m. the modulation is accomplished somewhere within these power stages, whereas in f.m. the modulation is accomplished before the frequency multiplication stages. In either case, f.m. or a.m., the primary concern of the power amplifier stages is to increase the power of the signal to be transmitted. However, the tuned circuits in f.m. have to be designed to handle the high frequencies that are involved, and the tubes so chosen that they will be able to handle these frequencies. It should be remembered that the new f-m band is around 100 mc, about double the frequencies of the old f-m band.

Another interesting feature is that in f-m transmitters a considerable frequency deviation is involved. This means that the tuned circuits in the power stages or the set have to be broad enough to handle the maximum bandwidth that is associated with f.m. In wide-band f.m., (that is, those f-m transmitters employed for commercial broadcasting in the 100-mc band) the maximum peak frequency deviation is equal to 75 kc for 100 percent modulation, which means that the tuned circuits in these transmitters have to be quite broad in order to

avoid distortion. In narrow-band f-m transmitters the bandwidth is not so large, so the tuned circuits in the power stages used are not too broad.

Aside from these two important considerations, the power amplifier stages in f.m. have to take into account the same factors as a.m. Since the operation of the new f-m broadcast transmitters is in the 100-mc region, special neutralizing circuits have to be employed to counteract certain lead inductances and capacitances which have appreciable effect at these high frequencies.

An extremely important consideration for the correct operation of the f-m transmitter is the design of the antenna system. If the antenna is not perfectly matched to the final power amplifier stage or if it is incorrectly situated, then no matter how well the remainder of the transmitter functions, the final transmitted f-m signal will be of poor quality. Such factors as distortion, power loss, standing waves, and the like add to the poor quality of transmission when the antenna system is not properly designed. This topic of transmitting antennas will be discussed in greater detail in chapter 5.

QUESTIONS

CHAPTER 3

3- 1. With regard to the frequency multiplication stages of a-m and f-m transmitters, where does the modulation take place in each—before or after these stages? Give the reason for your answer for the f-m transmitter.

3- 2. In brief, what can be done to a simple *R-L-C* oscillatory tank circuit to amplitude-modulate it? To frequency-modulate it? Give the answers in terms of varying a circuit element.

3- 3. What part does the frequency and amplitude of a modulating signal play in producing an f-m wave?

3- 4. What is the name of the basic type of tube circuit used to cause frequency modulation of a carrier signal?

3- 5. *a.* What are the names and symbols of the three basic tube constants?

b. Define g_m and r_p.

c. What is the mathematical relationship between g_m, r_p, and μ?

3- 6. *a.* In the basic reactance tube circuit, as seen in Fig. 3-4 on page 57, two impedances, Z_1 and Z_2, are inserted in the output. If one impedance is reactive (capacitive or inductive), what must the other impedance be?

b. According to the reactance tube circuit of Fig. 3-4, what are the four possible combinations of Z_1 and Z_2 that will permit the tube to function as a reactance tube?

3- 7. The impedance that a reactance tube injects is not purely reactive but also contains a resistive component. What is done so that this resistive component has a negligible effect compared to the reactive component?

3- 8. What is the phase relationship between the plate current and voltage across the output terminals of a reactance tube circuit in which the injected resistive component has a negligible effect? Discuss the phase relationship with regard to the injected reactance being capacitive in one case and inductive in another.

3- 9. *a.* Upon what characteristic of a vacuum tube does the injected impedance (both the resistive and reactive components) of a reactance tube depend?

b. Does the injected resistance which is in series with the injected reactance of a reactance tube, depend upon the resistor in the output circuit of the tube, whether this resistor is represented by Z_1 or Z_2 in the output circuit of Fig. 3-4 on page 57? Explain.

c. If the g_m of a reactance tube is equal to 5000 micromhos, what is the injected series resistance?

d. When it is desired to keep the injected series resistance of a reactance tube as low as possible, is it best to use a tube having a high or a low transconductance? Why?

3-10. *a.* Assume a reactance tube circuit as shown in Fig. 3-7(B) on page 60, where R is equal to 50,000 ohms, C is equal to 50 $\mu\mu f$, and the g_m of the tube used is equal to 7500 micromhos. What is the value of injected inductance?

b. If an audio signal input to the grid of this tube is such that g_m of the tube varies 2500 micromhos above and below the 7500-micromho value, what is the total *variation* in injected inductance?

3-11. Assume a reactance tube modulator circuit as shown in Fig. 3-8 on page 63.

a. What components determine the frequency of oscillations of the circuit with no audio input to the grid of the reactance tube?

b. If Z_1 is a capacitor and Z_2 a resistor, will the frequency of oscillations decrease or increase when the g_m of the reactance tube increases?

c. If Z_1 is a resistor and Z_2 a capacitor, will the frequency of oscillations decrease or increase when the g_m of the reactance tube decreases?

3-12. Assume a reactance tube modulator circuit similar to that of Fig. 3-8 on page 63, with no audio applied and a fixed value of 300 microhenrys inductance injected across the L-C oscillator circuit. With this injected inductance and elements L and C, where L is equal to 500 microhenrys, the oscillatory frequency equals 5 mc. If upon application of an audio signal the g_m of the reactance tube changes in such a manner that the injected inductance varies 25 microhenrys above and below its original injected 300-microhenry value, what is the peak-to-peak frequency deviation of the f-m signal produced? What is the maximum and minimum instantaneous frequency of the f-m signal?

3-13. Are crystal oscillators used as the master oscillator to produce an f-m signal in direct f-m transmitters? Why?

3-14. If a delay network, consisting of a reactance in series with a very high-valued (compared to the reactance) variable resistance, is shunted across the output of a crystal oscillator circuit, what is the maximum amount of phase change that can occur when the resistor is varied from its maximum to zero value?

3-15. In the circuit of Fig. 3-13 on page 71, how can a linear variation in the dynamic plate resistance of the tube be secured?

3-16. In the automatic frequency control circuit of Fig. 3-14 on page 74, what is the output voltage at point A when the oscillator frequency is stable?

3-17. For the circuit of Fig. 3-14 on page 74, assuming the frequency of the oscillator tube V_4 to be higher than the other signal used for the process of heterodyning; then

a. If the control voltage is such that the bias on the tube becomes less negative, has the frequency of the oscillator tube V_4 increased or decreased to cause this change?

b. If the oscillator tube V_4 shifts in frequency above its center or resting value, does the transconductance of the reactance tube increase or decrease?

c. If the injected inductance from the reactance tube is said to decrease because of the instability of the oscillator tube V_4, what must have happened to the resting frequency of the oscillator?

3-18. *a.* In f-m transmitters, what type of amplifier circuit is used for frequency multiplication?

b. The output circuits of frequency multipliers are usually tuned to one of three harmonics. What are they?

c. Why is the output signal of a class C amplifier rich in harmonics?

3-19. *a.* What are the possible arrangements of the tubes in a frequency multiplication system utilizing any combination of doublers, triplers, and/or quadruplers to give an output frequency of 90 mc for an input oscillator frequency of 7.5 mc? The order of appearance of the multiplier stages is unimportant.

b. If a frequency multiplication system consists of a doubler, tripler, tripler, and doubler, in the order named, what is the output frequency of the first tripler stage for an input oscillator frequency of 7.5 mc? The output frequency of this complete 4-stage multiplier system is considered to be what harmonic of the 7.5-mc oscillator frequency?

c. If the desired output frequency of a transmitter is 105.3 mc, and a frequency multipliaction system consisting of a doubler and two triplers is to be employed, what is the required oscillator frequency?

3-20. *a.* Why does the process of modulation in f-m transmitters take place before frequency multiplication?

b. Given an f-m transmitter with a multiplier system consisting of two doublers and one tripler, a master oscillator frequency of 8.0 mc, and an initial peak frequency deviation of the oscillator signal equal to 4.5 kc, what is the center frequency of the final output f-m signal from the transmitter and the final peak-to-peak deviation?

3-21. Under what conditions will the number of components (sidebands plus carrier) of an f-m wave be the same as that of an a-m wave?

3-22. If the two sidebands of an a-m wave *or* those of an f-m wave with a deviation ratio less than 1/2 are added, what is the name of the resultant signal that is the outcome of this addition?

3-23. What is the phase relationship between the double sideband and the center frequency component of:

a. An a-m wave?

b. An f-m wave having a modulation index less than 1/2?

3-24. In brief, how can an indirect f-m signal be obtained from an a-m signal?

3-25. Does the Armstrong system employ direct or indirect f.m.?

3-26. In the *original* Armstrong transmitter:

a. What stage is used to suppress the center frequency component of the a-m signal?

b. Why is the amplitude of the double sideband made much smaller than that of the carrier signal with which it is later combined?

3-27. If the initial peak phase swing of the original Armstrong transmitter was 8.5 degrees at a frequency of 75 cycles, what would be the equivalent peak frequency swing?

3-28. What is the purpose of the heterodyning system in the original Armstrong transmitter?

3-29. Why must the tuned circuits in the power output stages of f-m transmitters be very broad as compared with those in a-m transmitters?

CHAPTER 4

TRANSMITTERS OF TODAY

In the previous chapter the basic theory of the operation of f-m transmitters was discussed. Different types of modulator systems were studied as well as the theory underlying the need for frequency multiplication. The original Armstrong system was also analyzed to familiarize the reader with the first type of so-called f-m transmitter that the FCC allowed to operate. These topics should have inculcated a fairly good idea of how f-m transmitters operate. Chapter 4 will consider a number of different transmitters that are in operation today. Included in this group will be the commercial stations that operate on the broadcast band (wide-band f.m.) and other transmitters, such as police and ham sets, that operate on the narrow band. This reference to wide band and narrow band is with respect to the amount of frequency deviation employed. In the transmitters to be discussed the type of modulation employed differs for different sets. For instance, in the Armstrong transmitter indirect f.m. is used (initially starts with p.m.), in the Federal and RCA transmitters direct f.m. is used, and in some police and ham equipment indirect f.m. is used.

Discussion of these various different transmitters will introduce new subjects, heretofore not analyzed. To comprehend fully how the numerous different types of transmitters operate, many of these new topics will have to be studied, among them frequency division, preemphasis, motor frequency control, audio correction (predistortion), and balanced modulators. Analysis of these topics will be included with the discussions of the different transmitters. For instance, the topic of audio correction or balanced modulators will be discussed in conjunction with the Armstrong system. This does not mean, however, that a particular topic is concerned only with the transmitter under discussion. Audio correction networks and balanced modulators, for example, may also be employed in other transmitters that use phase shifting to obtain the final required f-m signal. This should be kept in mind throughout this chapter.

Analysis of the different f-m transmitters in operation today is going to be made by comparison, wherever possible, of their construction on the old f-m band and on the new f-m band. It should be remembered that the old f-m band was between 42-50 mc and the new band between 88-108 mc.[1] Discussion will center about the exciter unit and frequency control systems (if any) of the main transmitter. Although the change over from the old to the new f-m band is an increase in frequency of approximately two to one, the purpose was not at all to increase the frequencies of all stations by exactly twice the old frequency. Consequently, there had to be a number of changes, including the master oscillator and frequency multiplication stages. All this will be seen as the chapter progresses.

Audio Correction

Under the discussion of the Armstrong transmitter in chapter 3, it was stated that in order to have the p.m. directly tantamount to f.m., the amount of phase deviation had to be independent of the *frequency* of the audio modulating signal. To accomplish this the audio input frequency to the system had to pass through an *audio correction* network, sometimes known as a predistorter. Essentially, the effect of this correction network was to make the ratio of output amplitude to its input amplitude inversely proportional to the audio frequency. Since the phase deviation that would ordinarily occur, without correction, would be a function of the audio frequency, call it f, then with the correction network inserted, the output audio frequency (to the balanced modulator in this instance) is proportional to $1/f$. Consequently, it is seen that the effect of the audio frequency upon the amount of phase deviation is canceled by the correction network. The amount of phase deviation of the p-m signal is not affected by the frequency of the audio signal, but by its amplitude only, which is exactly what happens in direct f.m.

To explain this in somewhat greater detail let us consider the simple audio correction network as illustrated in Fig. 4-1. The circuit is nothing more than a simple RC series network in which the output voltage is taken across the capacitor C. Across terminals A, B is impressed the audio frequency voltage E. Due to the impedance of the circuit, a series current I is caused to flow through R and C. If the resistance of R is made much larger than the reactance of C for all audio frequencies involved (down to 50 cycles), the current determining component is primarily R, and the reactance of C has negligible effect on the amount of current flow. Since this is so, it can be said

[1]Of this new 88-108 mc band the frequencies between 88 and 92 mc are allocated for educational f.m., those between 92 and 106 mc are allocated for commercial f.m., and those between 106 and 108 mc for facsimile.

that the current flowing in the series circuit is primarily dependent upon R and we can write from Ohm's law that:

$$I = \frac{E}{R}$$

Since the reactance of C has negligible effect on I, the frequency of the audio voltage also has negligible effect on the amount of current. It is *only* the reactance of an a-c circuit (if any), whether it be inductive or capacitive, not the resistance, that changes with frequency. Therefore, the element in this circuit that changes with frequency is the capacitive reactance, but, since the magnitude of this reactance is

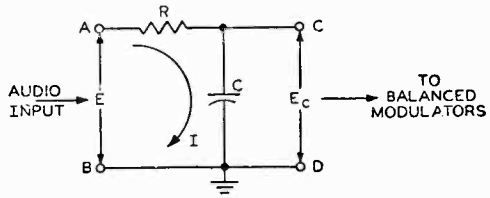

Fig. 4-1. A simple audio correction network, consisting of an RC series network in which the output voltage is taken across the capacitor C.

very small as compared to R, its effect on the amount of I can be neglected. In this respect the current I is said to be independent of the frequency and primarily dependent upon R and upon the magnitude of E, as indicated in the above relation.

Now the amplitude of the voltage E_c appearing across the capacitor C (across terminals C, D) is applied to the balanced modulators and is supposed to be inversely proportional to the frequency of the modulating signal. By the prearranged condition that R be much greater than the reactance of C, this is possible. This is simply proved by the following mathematics:

The voltage E_c across the capacitor is, by Ohm's law, equal to the current flowing through the capacitor multiplied by the reactance of the capacitor. The reactance of a capacitor, designated as X_c, is inversely proportional to frequency and in exact terms is:

$$X_c = \frac{1}{2\pi fC} \text{ in ohms}$$

where X_c is the amount of capacitive reactance in ohms
f the frequency of operation in cycles per second
C the capacity in farads
π a numerical quantity equal to 3.14.

The voltage E_c is then equal to the current I multiplied by X_c, or to be more concise:

$$E_c = \frac{I}{2\pi fC}$$

In this last expression the current I is the same current I as in the

first equation, where $I = E/R$, (because it is a series circuit and in such a circuit the current throughout is always the same) and by substituting the expression for I from the first equation into the last one, we find:

$$E_c = \frac{E/R}{2\pi fC} = \frac{E}{2\pi fCR}$$

Since $2\pi CR$ is a numerical constant (π, C, and R have predetermined values) we can call this constant by the letter K and rewrite the foregoing as

$$E_c = \frac{E}{Kf}$$

From this last equation it is readily seen that the voltage E_c across the capacitor C (that applied to the balanced modulators) is directly dependent upon the amplitude of the incoming audio voltage E and inversely proportional to the frequency f of the audio signal. Thus, the required prerequisites for the amount of p.m., being independent of the audio frequency, have been attained by making the voltage input to the modulators proportional to $1/f$ (that is, inversely proportional to f.)

This type of circuit is also referred to as a predistorter network because it distorts the frequency response curve of the input to the modulators that would be present if the corrective network were not there. In the case of a true speech or music signal, which is a complex audio wave, the ratio of distortion between the harmonics and the fundamental frequency is such that the fractional reduction follows the number of the harmonic.

The output of the correction network is often fed into a linear amplifier, because there is a loss in gain when going through this correction network.

Balanced Modulators

A balanced amplitude modulator, as previously mentioned, serves the purpose of producing in its output circuit only the double sideband portion of the modulated input r-f signal. Numerous different types of circuit arrangements can produce the desired double sideband. This output containing the intelligence can then be shifted in phase and recombined with the carrier signal, effectively producing a new signal that is phase modulated.

As an illustration of the operation of a typical balanced modulator (*tube* modulator) let us consider the balanced modulator circuit as used in the original Armstrong transmitter. The schematic for this modulator circuit is shown in Fig. 4-2. Since both the old and new f-m bands are in operation, Armstrong devised a dual system where

the same crystal oscillator and balanced modulator is simultaneously used to operate on both bands. This will be more evident in the next section. Let us consider the balanced modulator circuit of Fig. 4-2 without any audio input signal applied to the screen grids to see how this system balances out the carrier frequency. The input control grids are effectively connected in parallel, through similar *RC* networks. Some of the output from the crystal oscillator is applied to the control grids of each modulator tube. The circuit is so arranged that the same amount of oscillator voltage at the same phase is applied to each grid. With the necessary equal supply voltages on the tubes, equal plate current will flow in each tube. With the same polarity on the individual grids, the polarity (or phase) of the signals on both plates is also

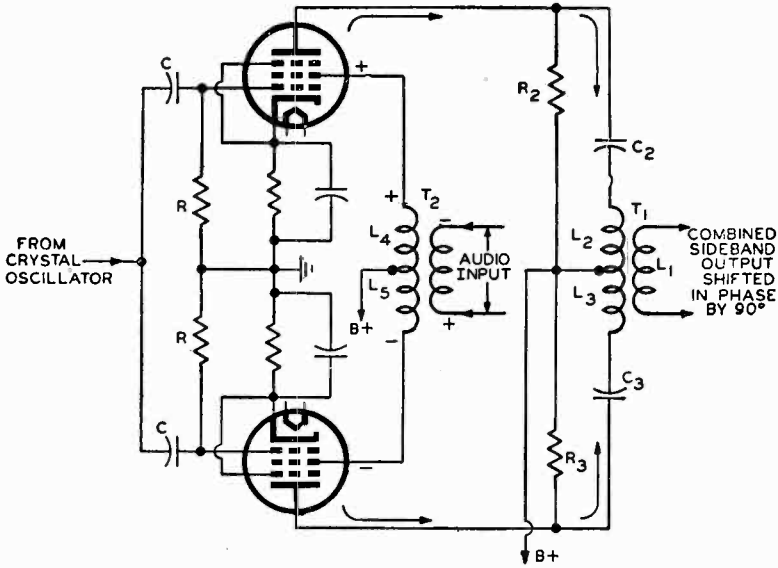

Fig. 4-2. Schematic of the balanced modulator circuit used in the original Armstrong f-m transmitter.

in phase but shifted, of course, 180 degrees from that of the signal on the grid. The plates (that is, outputs) of the tubes are connected in *push-pull* through the primary of transformer T_1. This means that the plate *signal* currents will flow in *opposite* directions as indicated by the arrows in Fig. 4-2. This is exactly opposite to what happens in a regular push-pull power amplifier circuit where the grids, however, are in push-pull and receive *out of phase* but equal voltages, making the plate polarities of opposite phase. Flowing in opposite directions in the balanced modulator circuit, the plate currents when combined

induce no voltage into the secondary coil L_1 of transformer T_1. This is fully explained as follows:

The signal plate current from the upper modulator tube flows through the L_2 part of the split primary of transformer T_1 and sets up a varying magnetic field in accordance with the crystal oscillator frequency. The signal plate current from the lower modulator tube flows through the L_3 part of the primary of the same transformer. The current flowing through L_3 also sets up a varying magnetic field in accordance with the oscillator frequency. This current, however, is flowing in the opposite direction to the previous current, which means that this magnetic field is varying in an opposite manner to the other field. Since the primary of the transformer is center-tapped and since the signal plate currents are *equal in magnitude* and of the *same phase,* the effect of the two varying magnetic fields is such that they cancel each other. They induce equal voltages across the secondary of the transformer, but these voltages have opposite polarities and cancel each other whereupon no voltage appears across the output terminals of the secondary. We have just seen how the balanced modulator tubes will function with respect to just a carrier frequency signal applied to its input control grids. Under this condition of operation it is found that no signal appears in the output circuit at all, which means the unmodulated carrier frequency was suppressed.

The balanced modulator circuit is very critical. If any unbalance exists in the circuit such that the plate currents flowing from both tubes (with no audio applied) are not equal, then some of the carrier frequency will appear in the output circuit, because the varying magnetic fields do not quite cancel each other. Consequently, both modulator tubes have to be as nearly equal in tube characteristics as is possible. Also the voltages supplied to both tubes have to be exactly the same. This includes both d-c supply voltages and the input crystal oscillator signal.

From this same diagram of Fig. 4-2, but with the audio input circuit connected as shown, we can determine how the double sideband component alone is obtained and shifted in phase by 90 degrees.

We have an audio input transformer, T_2, so arranged that the secondary is center tapped with the tap going to $B+$. The other terminals of the secondary are respectively connected to the *screen grids* of both modulator tubes. When an audio signal is applied across the primary of the transformer, equal voltages are applied to the screen grids due to the center-tapping of the secondary. The crystal oscillator frequency, already impressed across the control grids, causes r-f current to flow in the plate circuit, and the audio signal impressed on the screen grids *amplitude modulates* this plate current at the audio frequency. Thus, initially the system starts with a.m. The audio transformer is connected push-pull to the screen grid which means that,

although the signal voltages applied to these grids are of the same value, they are of opposite polarity. This is the same type of situation that exists in a push-pull amplifier stage which uses a transformer input to obtain the necessary phase inversion. Consequently, the audio signal causes an unbalance between the two modulator tubes, and, as mentioned before, any unbalance in the system causes a voltage to appear across the secondary of the output transformer T_1. If the tubes are perfectly balanced as far as everything except the audio signal is concerned, the audio signal will be the only cause of unbalance, and the output voltage across the secondary of T_1 will contain a signal that is varying in polarity and amplitude in accordance with this audio signal. This is more fully explained as follows:

Assume that for one-half cycle of audio the polarity on the terminals of the primary of T_2 is indicated by the plus and minus marks in Fig. 4-2. Since by transformer action the signal induced in the secondary, from the magnetic field caused by the primary, is 180 degrees out of phase with the primary signal, the polarities across the secondary will be as indicated. Thus, according to the polarity of the primary, the polarity across the secondary is such that the top of coil L_4 is more positive than the bottom of L_5. This means that for the half cycle of signal input under discussion, the voltages on the screen grid of the upper tube will be more positive than that voltage on the screen grid of the lower tube (indicated by the positive and negative signs respectively.) On the other half cycle of the audio signal input, the polarities between the two screen grids reverse, with the lower screen grid becoming more positive with respect to the voltage on the upper screen grid. In either half cycle the system is thrown out of balance as a result of unequal voltages on the screen grids. The audio signal then amplitude modulates the r-f plate currents and in the output of the system appears an a-m signal.[2]

In the output circuit of the system of Fig. 4-2 are two series resonant circuits; capacitor C_2 in conjunction with inductance L_2 and capacitor C_3 in conjunction with inductance L_3. Both form series resonant circuits which are broadly tuned to the crystal oscillator frequency. The tuning of each series tuned circuit is made broad by the resistors R_2 and R_3 that are in parallel across each series circuit. The tuned circuits are made broad enough so that they will be selective to both sideband frequencies as well as the center frequency. Since the tuned circuits are in series resonance, they will offer a minimum amount of impedance to the tuned frequency, and, consequently, most of the r-f plate current will flow in the directions indicated in Fig. 4-2 with very little through R_2 and R_3. The plate currents, now being

[2]It should be remembered that the amount of a.m. is very slight in order to have the a-m sidebands of the correct strength, so that the p-m signal to follow will have negligible amplitude variations.

slightly amplitude modulated, consist of a center frequency component and two sidebands, an upper and a lower. The center frequency component of the a-m signal is at the frequency of the crystal oscillator, and it has been shown how, with the system in balance for the crystal oscillator frequency, this frequency is suppressed. This also happens to the center frequency component of the a-m wave, and, consequently, all that is left is the two sidebands which combine into the double sideband in T_1.

These sidebands contain the audio intelligence, and, therefore, vary at a rate determined by the audio signal. Because this audio signal creates an unbalance in the modulator tubes, the double sideband component of plate current in one tube will at one-half cycle of audio form a magnetic field about its half of the primary of T_1 with its north pole towards the center tap. The signal current in the other tube will produce a magnetic field with its north pole away from the center tap. Thus, the fields are effectively in series, aiding one another, and a voltage of double sideband frequency will be induced into the secondary of T_1. The strength of this voltage depends upon the strength of the two r-f plate currents, which in turn cause magnetic fields about the individual halves of the primary of T_1. On the other half cycle of audio, the situation is reversed, and the magnetic fields point in the opposite direction. This causes a double sideband signal to be impressed across the secondary of T_1 as before.

Thus, the balanced modulator system produces only the double sideband signal of an a-m wave. As has been stated, this double sideband has to be shifted in phase by 90° and then recombined with the crystal carrier signal to obtain the necessary slightly modulated p-m wave which is equivalent to a slightly modulated f-m wave as determined by the audio correction network. The next problem is shifting this double sideband in phase by the required 90°. This phase change takes place in the output transformer T_1. (It is often referred to as the phase shifter.)

Before the voltage is induced into the secondary of T_1, the double sideband component that produces the magnetic field about the primary of the transformer is an exact component part of a true a-m wave with respect to phase. The use of some vector diagrams will make it easier to understand how the phase change from primary to secondary comes about. In an untuned transformer, the voltages in the primary and secondary are 180° out of phase. While in any inductor the current lags the voltage by 90°. In Fig. 4-3 (A) the primary current I_p is seen to lag the primary voltage E_p by 90°. It is also known that the secondary induced voltage E_s lags the primary current I_p, that causes the induced voltage, by 90° and this is likewise shown in Fig. 4-3 (A). This means that the current I_s, caused by the induced voltage E_s, lags this voltage by 90°, because the secondary is

an untuned inductance This means that the currents in the primary and secondary, as well as the voltages in the primary and secondary, are 180° out of phase with each other. All this is vectorially illustrated in Fig. 4-3 (A).

With these phase relations established, let us refer back to the output transformer of the balanced modulator circuit of Fig. 4-2. Since the primary of the transformer is series tuned (as previously discussed) it offers a purely resistive impedance to its broad resonant

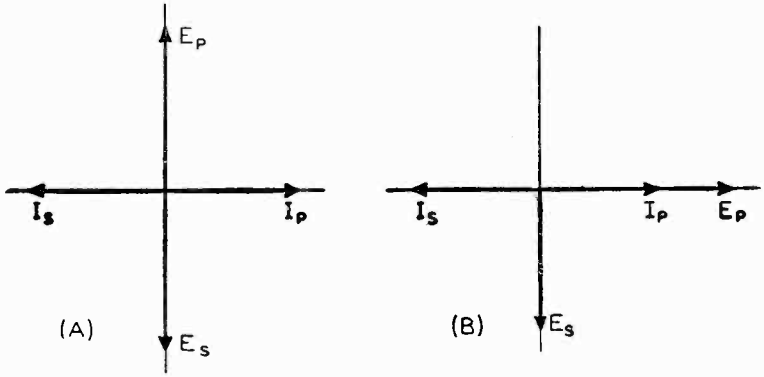

Fig. 4-3. Vector diagrams of the voltage and current relationships of an untuned transformer (A) and output transformer (B) of balanced modulator circuit shown in Fig. 4-2.

frequency. This means that the current and voltage in this primary circuit are in phase with each other. This is shown vectorially in Fig. 4-3 (B) where I_p and E_p are the respective primary current and voltage. As in the case of the untuned transformer, voltage E_s induced in the secondary *lags* the current flowing through the primary by 90°, as indicated by the respective vectors. From this vector diagram it is consequently seen that the voltage induced across the secondary is 90° out of phase with primary voltage E_p. Thus, we have established the fact that the *output transformer T_1 having a tuned primary as indicated in Fig. 4-2 and an untuned secondary causes a phase shift of 90° between the voltage in the primary and secondary.* (The actual change is such that the secondary voltage E_s lags the primary voltage by 90°.)

Hence, since the double sideband is the only component appearing in the output circuit, it is shifted in phase by 90° because of the inherent phase relations of the output transformer circuit. This double sideband is then combined with the crystal carrier frequency, and the combination is such that the resultant signal is varying in phase and amplitude as indicated in the vector diagrams of Fig. 3-19. If the amplitude variations in the resultant signal are made to have negligible

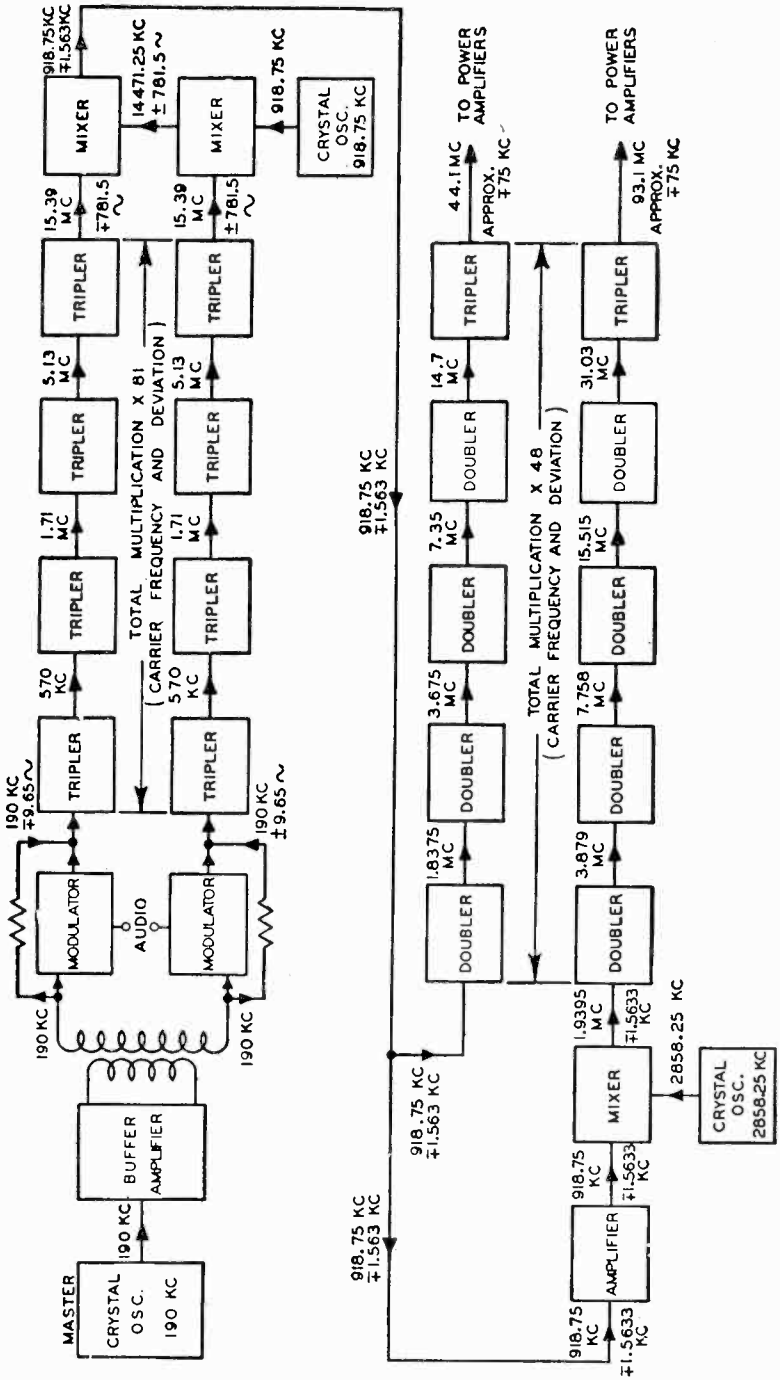

Fig. 4-4. Block diagram of Armstrong "dual channel" transmitter.

effect (accomplished by producing a slightly a-m signal to start with so that the amplitude of the phase-shifted double sideband components is very small compared with the amplitude of the carrier), the resultant signal is *effectively* varying only in phase. Due to the nature of the audio correction network, the relationship of the phase change is such that the resultant signal is equivalent to a frequency-modulated wave.

ARMSTRONG "DUAL CHANNEL" TRANSMITTER

The characteristics of the original Armstrong transmitter and the accompanying circuit discussions are considered necessary, because they were the original circuits upon which the basic foundation of a.m. to p.m. to f.m. was built. The Armstrong transmitter, as in use today, employs a similar technique of indirect f-m transmission, but the circuit is quite different. At the time of this writing both the old and the new f-m bands are in operation. To make sure that those radio receiver sets tuned to the old band receive f-m signals, as well as those radios designed for the new f-m band, the Armstrong transmitter at Alpine, N. J., as well as some other stations of today, works *simultaneously* on both bands. In this transmitter arrangement *the Armstrong dual channel phase shift modulator* is employed. The modulator is still energized by a crystal controlled oscillator and the modulation process is still from a.m. to p.m. to f.m. This dual modulator system, however, produces desired effects which were not available with the original system.

Before discussing the modulator system let us first study the complete transmitter as operating on both f-m bands from a block diagram view. Fig. 4-4 is a block diagram of the Armstrong "dual channel" transmitter as operated on both bands. The frequency of transmission on the old band is 44.1 mc, and on the new band 93.1 mc. To comprehend how the system functions to produce both frequencies of transmission simultaneously, it will be best to analyze the block diagram from the beginning of the circuit and trace the path of the signal.

The frequency of the crystal oscillator is 190 kc, and this signal is impressed across a buffer amplifier stage before it is applied to the dual modulator system. The dual modulator system, which also has an audio signal injected into it, functions in such a manner that a p-m signal appears in the output of *both* modulator tubes. This p-m signal has a peak phase deviation of 11.06° as compared with the peak deviation of 75-kc output from the transmitter proper (for 100 percent modulation) for a minimum audio frequency of 50 cycles. (As pointed out before, this is for a final output of less than one percent distortion.) The equivalent frequency deviation, for this amount of phase deviation, at 50 cycles of audio is equal to 9.65 cycles. This may sound like

a very small figure in conjunction with the 190-kc crystal oscillator frequency, but when the small amount of allowable distortion output is taken into account, this frequency deviation is considered to be good. The necessary amount of multiplication in conjunction with a double conversion system brings the original peak deviation up to the necessary 75 kc. This will soon be evident. The upper part of the block diagram (above the horizontal center line) is used on both bands, whereas the lower part has one section devoted to the old band and one to the new.

The modulator circuit is so arranged that, although the f-m outputs are the same, the deviations are out of phase with each other. This means that, if the input to the upper tripler section is such that the frequency deviation first swings in a decreasing direction, the frequency swing of the input to the lower triplers will be in an increasing direction. In other words, when the frequency swing of the f-m signal to one tripler section makes the instantaneous frequency of the f-m signal a minimum, the frequency swing of the f-m signal to the other tripler section makes its instantaneous frequency a maximum. As a result, the frequency deviations of the f-m signal input to the triplers are of opposite polarity at any one instant of time. This is indicated by the polarity markings next to the peak frequency deviation values accompanying the carrier frequency component in Fig. 4-4.

What we now have at the input to the tripler sections is the same center frequency component of the f-m signal, but the peak frequency swings are of opposite polarity. If we send these f-m signals through a series of *separate* multipliers, the peak frequency deviation will be multiplied by the same amount as the center frequency component. In this transmitter there is employed a dual chain of four tripler multiplication stages into which each individual f-m signal output from the modulators is injected. The total multiplication of the four tripler multiplication stages is $3 \times 3 \times 3 \times 3$ or 81 times. Thus, at the output of the last tripler in each chain the center frequency component of the f-m signals will be 190 kc multiplied by 81, or 15.39 mc, from both dual channels, since the frequency input to the first triplers is 190 kc. The values of the individual center frequency components of the f-m signal before they enter the different triplers are indicated next to the arrow showing the direction of flow.

The frequency deviation is also multiplied 81 times, and with the original peak deviation equal to 9.65 kc, the output peak deviation from the last tripler of each multiplication chain will be 781.5 cycles. Throughout the process of multiplication the polarity difference between the two separate frequency deviations is maintained, the separate deviations being 180° out of phase with each other. This is indicated by the polarity signs accompanying the 781.5-cycle markings on the block diagram of Fig. 4-4.

Next to be treated is one of the most important parts of this dual channel system of frequency modulation — namely the double conversion system which has the purpose of *doubling the frequency deviation* and producing a new center frequency component. The outputs from both tripler chains are injected into separate mixer stages. To secure stability of the new center frequency, a crystal oscillator is used which operates at a frequency of 918.75 kc. The output from this crystal oscillator is injected *only* into the lower mixer of the system. Conversion takes place inside this mixer stage and, due to the selectivity in the output circuit of the mixer, the output frequency is equal to the f-m signal frequency less the crystal oscillator frequency. Therefore, we have 15.39 mc less 0.91875 mc which is equal to 14.47125 mc. This output f-m signal, which still has the *same amount of frequency deviation* (this was discussed in the preceding chapter), is injected into the upper mixer stage.

Let us realize something at this moment. The lower mixer stage had an f-m signal and an *unmodulated* carrier signal injected into it with the result that the new signal is still frequency modulated and lower in value but with the *same* deviation frequency as the original f-m signal input. The upper mixer tube has *two f-m signals* injected into it, one from the previous mixer and the other from the last tripler stage of the upper multiplier system of the dual channel arrangement. The task of conversion in this mixer tube is somewhat different. The selective circuit in the output is such that the *difference* frequency between the two f-m signals is selected. The upper frequency (center frequency components of course) is 15.39 mc and the lower frequency 14.47125 mc, and the difference between these two signals is equal to 918.75 kc, the exact frequency of the crystal oscillator used in the first conversion circuit. Thus, the output frequency from the double conversion system does not depend upon the 190-kc master crystal oscillator frequency, but rather upon the crystal frequency of the conversion system, so that the master crystal frequency does not have to be exactly 190 kc but can vary somewhat on either side.

The really important feature of this double conversion system is the relationships of the individual frequency deviations of the two f-m signal inputs to the upper mixer tube. As is known, these frequency deviations are of opposite polarity (input to the multiplier chains), but the amount of deviation in each case is the same—781.5 cycles. Calling the f-m signal input from the tripler to the top mixer f and the other f-m signal input from the bottom mixer to the top mixer f_1, the frequency output will be $f - f_1$. The frequency of f is equal to a 15.39-mc center frequency component and also a 781.5-cycle peak deviation. The frequency f_1 is equal to a 14.47125-mc center frequency component and also a 781.5-cycle peak deviaion. If, at any one instant of time, the frequency deviation of f advances to a maximum positive

value, the frequency deviation of f_1 will advance to a maximum negative value. With this in mind, let us perform the subtraction of $f - f_1$ to obtain the output f-m signal from the mixer at the instant that the peak deviation of f is swinging in the maximum positive direction. Therefore, we have

15.39 mc — 14.47125 mc = 918.75 kc for the center frequency component, and for the frequency deviation we have:

$$(781.5 \text{ cycles}) - (-781.5 \text{ cycles}) = 781.5 + 781.5 = 1.563 \text{ kc}$$

This indicates that at the instant of time indicated, the actual frequency swing of the output f-m signal from the top mixer is equal to *twice* the original deviation.

Considering the peak deviation swing of f at the moment it is in the maximum negative direction means that the peak deviation swing of f_1 is in the maximum positive direction. If we still perform the mixer function of $f - f_1$, we find that the center frequency component does not change but that the deviation will be:

$$(-781.5) \text{ cycles} - (+781.5 \text{ cycles}) = -1.563 \text{ kc}.$$

This indicates that at the other extreme end of the peak deviation of the f-m signal inputs to the mixers, the peak deviation of the f-m signal outputs from the conversion system is still twice the original deviations, but in a negative direction.

The final outcome of this double conversion system is to produce a new f-m signal that has a different center frequency component equal in value to the crystal oscillator frequency employed in the *conversion* system, and also to double the frequency deviation that occurs at the output of the last tripler stages. The new signal output from the double conversion system is an f-m wave that has a center frequency component equal to 918.75 kc and a peak deviation equal to 1.563 kc. From here, this f-m signal is split up for transmission on the two separate bands.

Two individual channels are provided for this, as shown in the bottom part of the block diagram of Fig. 4-4. One produces the frequency output of 44.1 mc on the old band and the other produces the frequency output of 93.1 mc on the new band. Analysis of these two channels is very simple. Part of the f-m signal output of 918.75 kc with a peak deviation of 1.563 kc is passed directly through a new chain of multiplier stages to produce the 44.1-mc output for the old band. To obtain this 44.1-mc output in conjunction with the necessary 75-kc peak frequency deviation it is found, if we divide 44.1 mc by 918.75 kc, that the amount of multiplication needed will be 48. Likewise, dividing the peak deviation of 75 kc by the peak deviation of 1.563 kc it will be found that the amount of multiplication needed is also 48. Consequently, the chain of multipliers into which part of this new f-m

signal is injected, has a multiplication of 48. To secure this multiplication four doubler stages, from which a multiplication of 16 is obtained ($2 \times 2 \times 2 \times 2 = 16$), and a tripler stage are used, thus $16 \times 3 = 48$. If we multiply 918.75 kc by 48, the frequency found will be equal to 44.1 mc, and if we multiply 1.563 kc by 48, the peak deviation found will be equal to 75 kc. From the output of these multiplier stages the signal is applied to the necessary power amplifiers and antenna. Thus, it is easily seen how the intelligence is conveyed on the old f-m band.

The other part of the 918.75-kc signal that is taken off the double conversion system is applied to the second channel, namely that one producing the 93.1-mc signal for the new band. Since the maximum amount of peak frequency deviation must remain the same on both bands and since the initial amount of peak deviation is still equal to 1.563 kc, the same amount of frequency multiplication of 48 has to be employed in this system to insure the final 75-kc deviation output. Therefore, the multiplication system consists of four doublers and one tripler the same as for the old band. However, the center frequency component has to be much greater than 918.75 kc in order that a multiplication of 48 increase this frequency component to 93.1 mc. This is accomplished by a single conversion system.

This part of the 918.75-kc f-m signal from the double conversion system is first sent through an amplifier stage to increase its strength. Afterward it is injected into a mixer tube along with an external signal from a crystal oscillator whose frequency is equal to 2858.25 kc. It is known, from the analysis of the double conversion system and Armstrong's original transmitter, that, when an f-m signal and an unmodulated carrier are mixed together for the process of conversion, the *frequency deviation of the f-m signal remains unchanged.* With the output circuit of the mixer tuned to the difference frequency between the two input signals to the mixer, the signal output will be equal to 2858.25 kc minus 918.75 kc, or 1.9395 mc. Thus, the f-m signal output from the mixer stage will have a center frequency component equal to 1.9395 mc but a peak frequency deviation still equal to 1.563 kc. This signal then enters the multiplication stages in which the 1.9395-mc signal is multiplied 48 times to give a center frequency output of 93.1 mc, and, as mentioned before, the 1.563-kc deviation is multiplied 48 times to give the 75-kc deviation output. After the multiplication stages, the output f-m signal is applied to the necessary power amplifiers and antenna for transmission. The power amplifier stages and antenna are separate circuits for each frequency of transmission.

Dual-Channel Phase-Shift Balanced Modulator

The heart of the Armstrong transmitter of today is the dual channel phase-shift balanced modulator. In discussing the block diagram of

the Armstrong transmitter we passed lightly over the modulator system merely stating the character of the output signals without revealing how they were obtained. The reason was that this analysis is quite intricate compared with the rest of the system and therefore requires a more detailed discussion.

The schematic diagram for this modulator system is shown in Fig. 4-5. Only two tubes are used for the modulators, similar to the original Armstrong balanced modulator circuit. In the newer system, however, the analysis is quite different and entails a great deal about phase

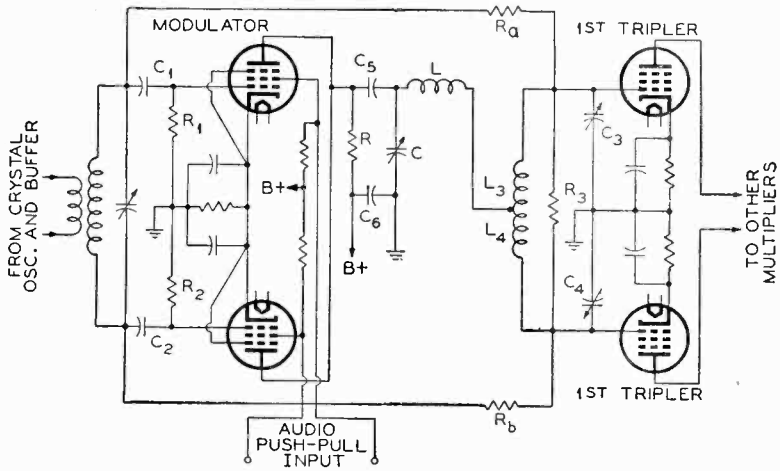

Courtesy Edwin H. Armstrong

Fig. 4-5. Schematic diagram of the dual-channel phase-shift balanced modulator used in the present Armstrong transmitter.

relations. Once the phase relationships within this circuit are fully understood, there will be no difficulty in understanding the function of this modulator circuit. To learn how this modulator system functions, we will divide it into two parts and discuss each part individually. We will first consider that part of the system up to and including the load resistor *R* and afterward analyze the rest of the system.

It was previously mentioned that there exist several forms of balanced modulator circuits which suppress the carrier and produce only a double sideband output. The first part of the circuit of Fig. 4-5 is a balanced modulator system having the same function as the circuit of Fig. 4-2, but by a different method. Let us first understand how this new modulator system works to suppress the carrier frequency, without any audio applied, and with the system in perfect balance.

The output from the crystal oscillator and buffer stages is transformer coupled to the balanced modulator control grids, so that the

voltages applied to the respective grids are in push-pull (that is, 180° out of phase). The resistance-capacitance networks at the input are phase-shifting networks which shift the phase of the push-pull signals by 90°, but the signals on the grids are still 180° out of phase with respect to each other. (More about this phase-shifting network later.) With the signals on the grids in phase opposition, the r-f voltages appearing at the plates of both tubes are also 180° out of phase with each other. If you will notice, the plates of the modulator tubes are connected in *parallel,* so that the plate currents from each tube flow in the same circuit. However, since the modulator tubes are balanced, the two r-f plate currents are exactly equal in magnitude but of opposite polarity, and thus their combined effect is zero because they balance each other. Thus, with the tubes operating in balance, no r-f output voltage appears across the load resistance R, even though there is a carrier signal input to the two grids of the modulator tubes. It is, consequently, seen how there is suppression of the carrier signal.

If there is any unbalance in this system, the two plate currents will differ, and an r-f voltage output will appear across the load resistance R. If the unbalance is caused by an audio push-pull input to the screen grids of the modulator tubes, the result will be the same as that in the original Armstrong modulator of Fig. 4-2. That is, the audio signal would amplitude modulate the carrier and, due to the unbalance caused by the audio, the double sideband component of the a-m signal will appear across the load resistance R during both alternations of the audio signal. The center frequency component of the a.m. (equal in frequency to that of the crystal oscillator) is suppressed because of the balance of the system with respect to the r-f input. Consequently, it is seen how the double sideband output of the a-m signal appears in the output of this system. It should be remembered that the percentage of a.m. is small, so that the amplitude of the double sideband is small in comparison with that of the crystal carrier frequency with which it is to be combined.

Understanding how this modulator works, let us now look into some of the phase relations in this circuit. The input circuit to the balanced modulator is redrawn in Fig. 4-6 together with a vector diagram describing its action. The voltage E is that voltage of crystal frequency that appears across the secondary of the input transformer. The polarity of this voltage is such that the top part of the coil is of opposite sign from the lower part. (This is a natural function of any coil.) If the capacitance-resistance networks did not have any effect on phase change, equal but out of phase voltages would still appear on the modulator grids. This means that half the magnitude of voltage E is applied to both grids. In Fig. 4-6 E_1 and E_2 are equal to each other, and each is equal to half of E (in magnitude only.) Due to the inherent phase quality of a coil, both of these voltages are 180° out

of phase with each other with respect to ground. This is indicated in the accompanying vector diagram where E_1 and E_2 are shown as being 180° out of phase with each other but equal in magnitude. The networks of C_1R_1 and C_2R_2 are so arranged that the capacitors and resistors respectively are equal to each other and the value of the resistances are very much smaller (ratio of over 1 to 100) than the capacitive reactances (at the crystal frequency).

Owing to this arrangement the individual capacitance-resistance networks are effectively capacitive, and the currents flowing in the individual circuits lead the voltage across them. If the current flowing through R_1 is designated as I_1, this current is leading the voltage E_1 by 90°, as seen in the vector diagram. The current I_2 flowing through R_2 is leading voltage E_2 by 90°. These currents, I_1 and I_2, are really one individual current since the complete network is a series circuit, but due to the ground connection between the two resistors, R_1 and R_2, the current when flowing through R_1 is said to be flowing toward ground and that flowing through R_2 is said to be flowing away from ground, so that they have individual phase relations with respect to the voltages E_1 and E_2. Consequently, it is said that these two currents are also 180° out of phase with each other. The voltage drop E_{R1} across the resistance R_1 caused by current I_1 is in phase with this current but 90° out of phase (leading) with voltage E_1. Likewise, the voltage drop E_{R2} across the resistance R_2 caused by current I_2 is in phase with this current but 90° out of phase (leading) with voltage E_2. This is all indicated on the vector diagram.

Referring to this vector diagram of Fig. 4-6 what has happened is that the voltages now appearing across the modulator grids E_{R1} and E_{R2} are each 90° out of phase with the voltages E_1 and E_2 that would have appeared on the grids, had the resistance-capacitance network resulted in no phase shift. However, it will be noted that the voltages E_{R1} and E_{R2}, now appearing on the modulator grids are still 180° out of phase with each other.

The effect of this whole system is to shift the input carrier frequency to the modulators by 90°. Thus, when the audio signal amplitude modulates the carrier plate current the *double sideband produced in the output of the modulator will already have been shifted in phase by 90°*, so that it is now ready to form the necessary p-m signal as in the original Armstrong transmitter.

In other words this modulator system first shifted the carrier in phase by 90°. Then the carrier is amplitude modulated, and, since the resultant sideband output from the balanced modulator has been already shifted in phase, no output phase shifter is needed. This phase-shifted double sideband component now appears across the load resistor R ready to be impressed across the rest of the network.

Since the reactances of the capacitors C_1 and C_2 are so much greater than the resistances R_1 and R_2 the voltage drops across these resistances are very small compared with the total voltage applied across the network. The vector diagram illustrates this voltage relation but not to true scale, because, in order to be accurate, voltages $E_1 + E_2$ would have to be more than 100 times larger than the resistance voltage drops.

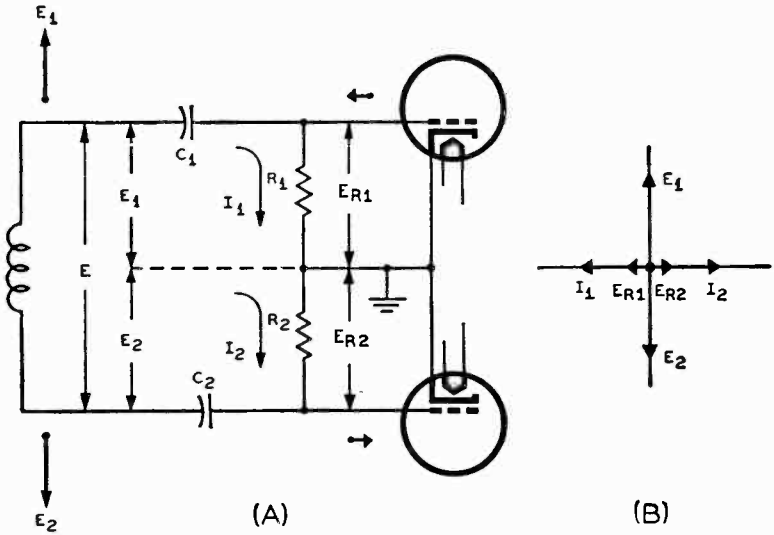

Fig. 4-6. The current and voltage distribution (A) in the input circuit to the balanced modulator of Fig. 4-5 and the vector representation (B) of these electrical conditions.

To clarify the relationship between the phase differences of the voltages across the secondary of the input transformer and those applied to the modulator grids, vectors are drawn close to the coil terminals and grids of the modulator tubes in Fig. 4-6 (A).

We now come to the latter half of the dual-channel phase-shift balanced modulator circuit of Fig. 4-5, that part appearing after the load resistance R. Let us first analyze this circuit when no audio voltage is applied to the modulators. In this case no r-f output appears across the load resistance R. Connected to both ends of the secondary of the input transformer are two coupling resistors R_a and R_b. These resistors couple some of the r-f voltage appearing across the secondary directly to the grids of the first tripler tubes. This voltage is at the frequency of the crystal oscillator. To understand the phase relationships between this coupled voltage and the sideband voltage as they both appear on the first tripler grids, we have to simplify the network appearing to the right of resistor R.

It is false to say that in Fig. 4-5 the capacitor C_3 and the inductance L_3, or the capacitor C_4 and inductance L_4 constitute simple series tuned circuits. Although this may appear to be the case, the effect of the mutual inductance as caused by the coupling between L_3 and L_4 has to be taken into account. Inductance L_3 and L_4 are parts of a center tapped coil such that L_3 and L_4 are wound in series aiding. This makes the mutual inductance additive to the total inductance across the complete coil. If the mutual inductance is designated as the letter M then the total inductance across the entire coil is equal to $L_3 + L_4 + 2M$. However, if the inductance across each individual half of the coil is measured, the values found would be just L_3 and L_4 respectively.

Due to these measurements the center tapped coil can be represented by an equivalent circuit. This circuit is shown in Fig. 4-7. In part (A) of this drawing the original coil is shown with the indication that mutual inductance exists between the individual halves and in part (B) the equivalent network is drawn. To show that they are equivalent we can measure the inductances between the respective terminals to see if they are the same. For example, across terminals 3 and 5 in Fig. 4-7 (A) we would measure L_3 and across the same

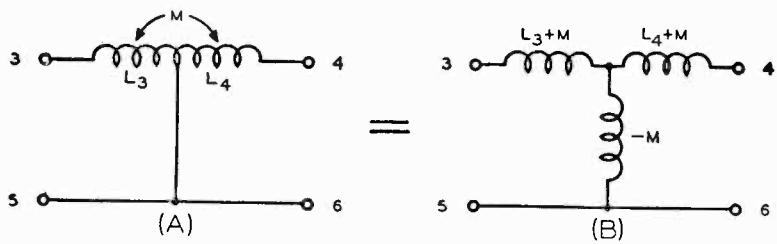

Fig. 4-7. The center-tapped coil, L_3 and L_4, of Fig. 4-5 is shown in (A) with the indication that mutual inductance M exists between the two halves of the coil. The equivalent network is shown in (B).

terminals in Fig. 4-7 (B) we would measure $(L_3 + M) - M$ which is also equal to L_3 because the M's cancel out. Similarly, across terminals 4 and 6 in part (A) we find L_4; across the same terminals in part (B) we have $(L_4 + M) - M$ which is also equal to L_4. Thus, it is seen that the two circuits are equivalent to each other.

With this in mind we can then simplify the other half of the network of Fig. 4-5 not yet analyzed. This is illustrated in simplified form in Fig. 4-8. Capacitors C_3 and C_4 are both equal to each other, and so are the inductance values of L_3 and L_4. The total inductance across points X and Y is $L_3 + L_4 + 2M$, and this total inductance is in resonance, at the crystal oscillator frequency, with the two series capacitors C_3 and C_4. Since at resonance a tuned circuit is purely resistive to the resonant frequency, the voltage from the secondary of the

modulator transformer coupled into the tripler grid circuits through R_a and R_b does not change in phase. This means that the phase of the carrier voltage at the top of the modulator secondary is the same as that of the voltage at the upper tripler, and the phase of the carrier voltage at the bottom of the modulator secondary and at the lower tripler also are the same. These voltages at the tripler grids are smaller than those at the secondary of the modulator input transformer because of the voltage drop in coupling resistors R_a and R_b. Since R_a and R_b are equal to each other, the carrier voltages on the tripler grids are equal in magnitude. It should be remembered that, since the voltages at the secondary of the modulator transformer are in phase opposition (that is, 180° out of phase), so are the voltages at the tripler grids.

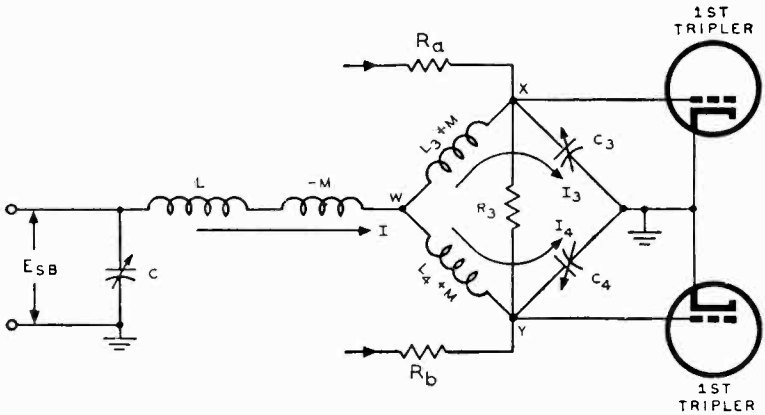

Fig. 4-8. Circuit equivalent to that coupling the double sideband output of the balanced modulator to the grids of the tripler tubes of Fig. 4-5.

With audio applied to the modulator there appears a double sideband output signal across the load resistance R of Fig. 4-5. Due to the 90° phase shift of the carrier input to the modulator, the double sideband output is already 90° out of phase with the carrier signal across the secondary of the modulator transformer. This double sideband output appearing across the load resistor is designated as E_{SB} in Fig. 4-8. The circuit that couples this sideband voltage to the tripler grids is shown in equivalent form in Fig. 4-8. Examining this equivalent circuit and the circuit of Fig. 4-5, it will be noted that capacitors C_5 and C_6 are omitted. The reason for this is that C_5 is just a d-c blocking capacitor to prevent d.c. from getting on the tripler grids and C_6 is just a bypass capacitor in the plate load circuit of the modulator tubes. Both of these capacitors are high enough so that they have negligibly small reactances at the high frequency of operation and can be considered as r-f short circuits. The resistors and capacitors in the cathode

circuits of the triplers are also omitted because, at the frequency of operation, the capacitors are likewise equivalent to a short circuit. So the cathodes are shown grounded as far as the r.f. is concerned.

We can also consider the resonant elements as the combination of two series resonant circuits. At resonance, the reactance of the series combination of C_3 and C_4 is equal to the reactance of the series combination of $L_3 + M$ and $L_4 + M$. Since C_3 equals C_4 and $L_3 + M$ equals $L_4 + M$, the reactance of C_3 alone equals the reactance of $L_3 + M$ and the reactance of C_4 equals the reactance of $L_4 + M$, both at the frequency of the crystal oscillator. This means that $L_3 + M$ and C_3 are in series resonance as well as $L_4 + M$ and C_4. The resonance in each case occurs at the frequency where the reactances of the inductances and capacitances are equal, namely, the frequency of the crystal oscillator. The resistance R_3 is inserted to make the resonant circuits broad enough to have a selectivity that will admit the double sideband frequencies which, at peak proportions, may have a frequency 15 kc greater or less than the crystal oscillator frequency. This is so because the audio frequency is capable of going as high as 15 kc.

At resonance in a series tuned circuit the impedance is purely resistive and is at a minimum. This means that the L in Fig. 4-8 is in series with the mutual inductance $-M$ (effectively a negative inductance) and also in series with the low effective resistance offered by the two series resonant circuits to ground. Since capacitor C is connected between one side of the coil L and ground, it is in parallel with this series inductive and resistive arrangement. The value of L is so chosen that it is sufficiently greater than the "negative" inductance of $-M$ to produce an effective inductance in parallel resonance with C at the crystal frequency. Therefore, the double sideband voltage E_{SB} is delivered to a completely resistive load and undergoes no phase changes. Since the circuit is a parallel circuit, the same voltage E_{SB} exists across each branch of the circuit. The reactance of the effective inductance (of L and $-M$) is so much greater than the low resistance offered by the two series tuned circuits that that branch of the parallel circuit can be considered as almost a pure inductive circuit. As the voltage across an inductance leads the current through it by 90°, the current I flowing through the inductive branch of the parallel circuit is lagging the voltage E_{SB} across it. This is shown by the two vectors E_{SB} and I in Fig. 4-9 being 90° out of phase with each other, with voltage vector E_{SB} leading. At the center tap of the coil, point W in Fig. 4-8, the current I divides equally into two parts, namely I_3 and I_4. The two circuits in which I_3 and I_4 appear, are at series resonance and purely resistive, and no phase change occurs in the two currents with respect to the original current I.

This is shown vectorially in Fig. 4-9 where the two current vectors I_3 and I_4 are equal in magnitude and phase and coincide with each

other; both of these currents in turn are equal to half of vector I and in phase with it. Since the currents I_3 and I_4 are equal and also since capacitors C_3 and C_4 are equal, the individual voltage drops across these capacitors are also equal. These voltage drops are designated as E_{C3} and E_{C4}, respectively. Voltage across a capacitor lags the current flowing through it by 90°, and so voltage E_{C3} lags current I_3 by 90° and voltage E_{C4} lags current I_4 by 90°. This is illustrated in Fig. 4-9

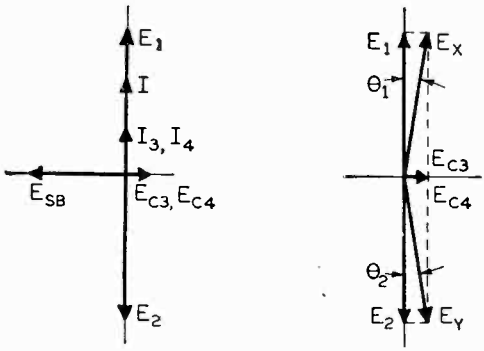

Fig. 4-9, left, 4-10 right. Vector diagram (left) of the electrical quantities indicated in Fig. 4-8, where E_1 and E_2 are equal but opposite phase crystal frequency voltages across C_3 and C_4 respectively. Fig. 4-10 is the vector diagram of the voltages appearing at the grids of the triplers.

where the two voltage vectors E_{C3} and E_{C4} are equal and in phase with each other, and where both are lagging the respective currents I_3 and I_4 by 90°.

It should be remembered that voltages E_{C3} and E_{C4} are at the sideband frequencies but of course reduced in amplitude. These voltages are considered the parts of the double sideband which are applied to the upper and lower tripler grids respectively. If the vector diagram of Fig. 4-9 is examined once more, it will be found that the two double sideband vectors E_{C3} and E_{C4} are 180° out of phase with the original double sideband signal E_{SB} appearing across the load resistance R.

The center frequency components of voltage coupled through resistors R_a and R_b from the secondary of the modulator input transformer are not changed in phase by the resistive effect of the resonant circuit, but are only reduced somewhat in amplitude. By having a ground between the two equal capacitors C_3 and C_4 and by having resistors R_a and R_b equal, equal but opposite phase crystal frequency voltages are applied across the individual capacitors. These voltages are designated as E_1 (across C_3) and E_2 (across C_4) similar to those

crystal frequency voltages across the secondary of the modulator input transformer. These voltages, although 180° out of phase with each other, are each 90° out of phase with the double sideband output voltage, E_{SB}, from the modulator tubes. This is so because of the 90° phase shift originally given the input crystal voltage to the modulator by the C_1R_1 and C_2R_2 phase shifting network. Since E_1 and E_2 are both 90° out of phase with E_{SB}, their vectors are drawn as seen in Fig. 4-9. The vector diagram shows that voltages E_1 and E_{C3} which are across capacitor C_3 and hence across the input to the upper first tripler tube, are 90° out of phase with each other. The same applies to vectors E_2 and E_{C4} and capacitor C_4 with respect to the lower tripler tube. Drawing another vector diagram with just the voltage vectors appearing across the input grid of the triplers and adding the respective voltages on each of these grids will give us a more vivid picture of the final voltage input to these tubes.

This is illustrated in Fig. 4-10, in which vectors E_X and E_Y are the resultant voltages that occur after the double sideband voltage is combined with the crystal carrier signal. They are applied to the upper and lower tripler grids respectively. These two resultant signals are practically 180° out of phase with each other due to the small amount of sideband voltages as compared with carrier voltages. The modulator is operated so that, for less than one percent output distortion for 100 percent modulation (75-kc peak deviation), the peak phase deviation in either case (both being symmetrical) is 11.06 degrees for a 50-cycle audio input, which is equivalent to a 9.65-cycle peak frequency deviation.

Because of the symmetry of the complete system, the phase deviations of both resultant signal inputs to the tripler grids are equal. Therefore, phase angles θ_1 and θ_2 in Fig. 4-10 are equal, *but* it is seen that E_X *lags* its center frequency component E_1 by θ_1 degrees and E_Y *leads* its center frequency component E_2 by θ_2 degrees. Since vectors E_1 and E_2 are 180° out of phase, the two resultant signals are approximately 180° out of phase, but when the frequency deviation of one is increasing (that is, phase leading), the frequency deviation of the other is decreasing (that is, phase lagging). When the audio signal progresses through 180° from the condition shown here, the vectors shown in Fig. 4-10 change their relative positions. E_{C3} and E_{C4} shift 180°, with the result that E_X then leads E_1, and E_Y *lags* E_2.

We thus see that the f-m signal inputs to the two tripler grids are such that their center frequency components are equal to each other. However, when the frequency deviation of one causes the resultant or instantaneous frequency to increase to a maximum, the frequency deviation of the other causes its resultant or instantaneous frequency to decrease to a minimum. This is the reason for the opposite polarity signs next to the deviation frequency in Fig. 4-4.

THE WESTERN ELECTRIC DIRECT F-M TRANSMITTER

In contrast to the indirect f-m system employed in Armstrong's transmitter, the transmitters of the Western Electric Company use direct f.m. by means of reactance tubes.

Besides the power stages there are two main sections of the direct f-m transmitter. One section produces the actual f-m signal, and the other section is the automatic frequency or stabilization control system. The production of an f-m signal in the Western Electric transmitters is, as stated, one of direct f.m., using balanced reactance modulators and a push-pull oscillator circuit. The important part of these transmitters is the method of stabilizing the center frequency of the push-pull master oscillator. This method of stabilization, or automatic frequency control, is quite different from that afc circuit discussed in chapter 3. This system is a mechanical-electrical arrangement which uses a motor for correcting the center frequency of the oscillator. In conjunction with this type of frequency control a *frequency dividing* system is used which employs *balanced ring modulators* utilizing regenerative feedback.

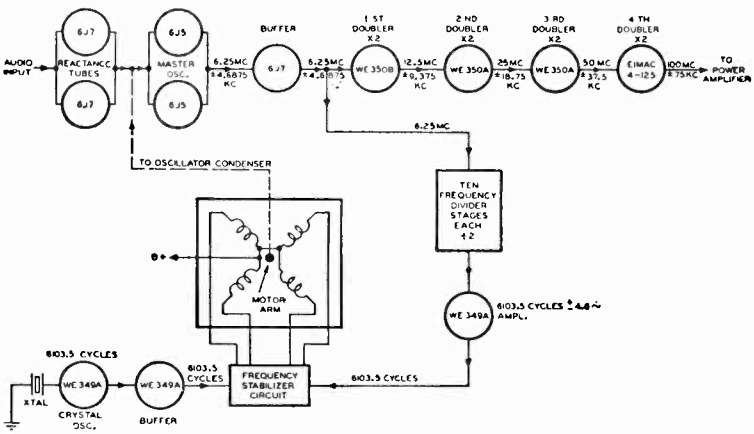

Fig. 4-11. Block diagram of the Western Electric f-m transmitter without the final power stages.

Before going into a separate discussion of these individual circuits lets us first study the block diagram of the Western Electric transmitters as operated today. In Fig. 4-11 we see such a block diagram, in which the power amplifier stages are omitted from the drawing. This block diagram is representative of the transmitters that are operating on the new 88-to-108-mc band. The primary difference, so far as tube functions are concerned, between the new band circuit and the old band (42 to 50 mc) transmitter arrangement, is that, in

place of the last doubler tube shown in Fig. 4-11 an amplifier formerly was used. Thus, if Fig. 4-11 is examined it will be seen that four separate doubler stages are employed, and, hence, the total amount of frequency multiplication is equal to 16. For a peak frequency deviation of 75 kc (for 100 percent modulation) the peak frequency deviation at the output of the modulated oscillator or buffer stage is equal to 75/16 or 4.6875 kc. This contrasts with the transmitter operated on the old band, which employed only three doubler stages and, therefore, had a frequency multiplication of only 8. In this respect the peak frequency deviation at the output of the buffer (for 75-kc final output peak deviation) would have to be 75/8 or 9.375 kc — twice that employed in the new band transmitters.

In Fig. 4-11 the two separate sections, f-m signal production and frequency stabilization, are readily noticed. If we assume that the transmitted center carrier frequency component is 100 mc, the frequency of the master oscillator would be the division of 100 mc by the amount of multiplication — which is 100/16 or 6.25 mc. The value of the center frequency component of the f-m signal, together with its peak frequency deviation, is indicated next to the input to the multiplier stages, denoting the frequency values of the f-m wave as they enter the doublers.

The analysis of the direct f-m system is straightforward, but that of the frequency control system is quite different from any encountered as yet. This frequency stabilization system is briefly described as follows:

Some of the output from the buffer stage is tapped off and applied to the input of a frequency divider system. This frequency divider system consists of ten frequency division stages with each stage having a frequency division equal to 1/2. That is, the input signal to one divider stage appears in the output of that stage at half its original frequency. Taking into account all the dividing stages, we have a total frequency division system wherein a division factor of 1/1024 exists. This value of 1/1024 is obtained by multiplying 1/2 by itself 10 times. The frequency input to the dividing system, as tapped off the output of the buffer stages, is equal to 6.25 mc at a peak deviation frequency of 4.6875 kc. After passing through the complete system of frequency division, the output frequency will be the input frequency divided by 1024. Therefore, 6.25 mc/1024 equals 6103.5 cycles and 4.6875 kc/1024 equals approximately 4.6 cycles.

From this analysis we find that the output signal from the dividing system is an f-m signal that has a center carrier frequency component equal to 6103.5 cycles at a peak deviation of about 4.6 cycles. This amount of peak deviation for 100 percent modulation, may occur at the lowest audio frequency input, namely 30 cycles; and, at this deviation and audio frequency, the modulation index is about 0.15, which

means that only two effective sidebands (one sideband pair) appear at the output of the dividing system. (See note at end of Table 1 in chapter 2.) If the audio frequency is increased from 30 cycles, the modulation index will decrease, and the sidebands will never increase beyond one pair. However, as the audio frequency is increased and thus the modulation index decreased, the amplitude of the sideband pair decreases while that of the center frequency component increases. As the number of dividing stages is increased, the frequency deviation decreases, which again means that the modulation index, for any one audio frequency, decreases. In turn this decreases the number of effective sideband pairs and also their amplitudes and increases the center carrier frequency component. In effect then, what a frequency dividing system does to an f-m signal is to concentrate the energy of the f-m signal into its center carrier frequency component. From what has just been discussed, it can be seen that the frequency deviation at the output of the dividing system, though it can never be greater than approximately 4.6 cycles, can be less. The lower the amount of this frequency deviation the better will be the operation of the stabilizing motor.

The output of the last dividing stage is injected into an amplifier using a WE349A pentode tube. The output from this amplifier is injected into a frequency stabilizing circuit. Also injected into this frequency stabilizing circuit is the output from a crystal buffer tube. The frequency of the crystal oscillator which is connected to the buffer tube is 6103.5 cycles, the same frequency obtained from the divider stages. The output of the frequency stabilizing circuit is injected into a four winding synchronous motor. When the output frequency of the master oscillator is exactly in tune, the frequency output from the divider stage is exactly the same as that of the crystal oscillator. In this respect the stabilizing circuit functions so that there is no phase difference in the magnetic fields set up between the different poles of the motor, and the shaft of the motor remains stationary. If the master oscillator becomes off tune due to some instability, the frequency output from the divider system will likewise change. This means that the input frequencies to the stabilizer from the divider system and crystal oscillator system are no longer the same. The frequency stabilizer system then produces a shift in the magnetic fields within the motor, and the magnetic fields rotate according to the difference in the two frequencies. The armature of the motor, being in the magnetic field, rotates according to this same difference in frequency. The armature shaft, being connected to the variable shaft of the master oscillator tuning capacitor, will change the capacitance of these capacitors so that the frequency output from the master oscillator will be stable again.

Balanced Modulator and Oscillator Circuit

In the Western Electric transmitters the effect of direct f.m. by reactance injection is obtained in a somewhat different fashion from that discussed in the previous chapters. The circuit for the modulator-oscillator stage is shown in Fig. 4-12. It essentially consists of a push-pull oscillator circuit and a reactance tube modulator circuit employing two tubes wherein the plates are connected in push-pull and the grids in parallel so far as r.f. is concerned. The oscillator tank circuit consists of capacitors C_1, C_2, C_3, C_4, in parallel with inductance L_1 and the injected reactance from the modulator tubes. Coil L_2 is coupled to coil L_1 and, by transformer action, some energy of oscillator fre-

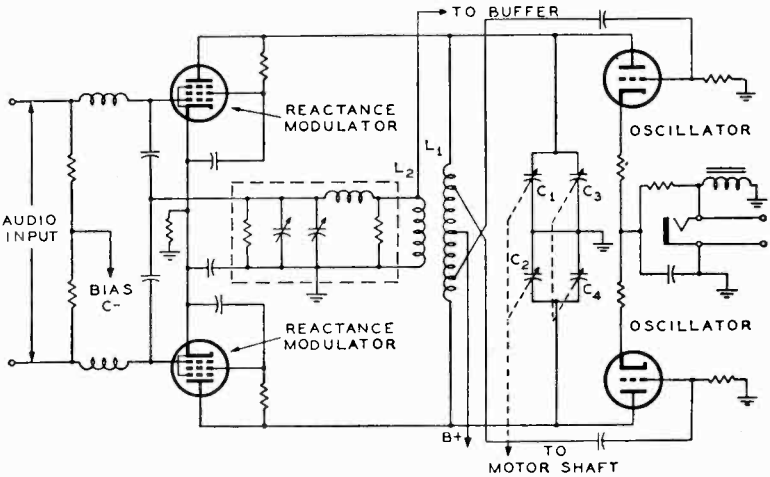

Courtesy Western Electric Co.

Fig. 4-12. The modulator-oscillator stages of the Western Electric transmitter.

quency is induced into coil L_2. This energy is passed through a 90° phase-shifting network, shown in the dotted part of Fig. 4-12, and the output from this network is applied to the parallel grids of the modulator tubes. The modulator plates are connected across the oscillator tank circuit which in turn is connected to the oscillator plates. Since the input r-f voltage (of oscillator frequency) to the modulators is 90° out of phase with that voltage existing on the high side of L_2, it is likewise 90° out of phase with the voltage existing on the high side of L_1. The r-f plate currents of the modulator tubes are in phase with the voltages existing on the grids of the same tubes. The r-f plate currents of the modulators are therefore 90° out of phase with the oscillator tank voltage.

To simplify all this, a simple vector diagram is drawn in Fig. 4-13. In this diagram the voltage at the top of L_1 is designated as E_1. Then

by transformer action the voltage E_2 at the high side of L_2 is 180° out of phase with E_1. This voltage E_2 being subjected to a 90° phase shift is designated as voltage E_p as it appears on the modulator grids. (This phase shift causes a lagging 90° change.) It is the nature of amplifying vacuum tubes that the plate current is in phase with the voltage on the grid. The plate current of the modulators is designated as I in the vector diagram, and it is seen to be in phase with E_p, the phase-shifted voltage on the grids of the modulators. Comparing the phase relationships of the vector diagram readily discloses that the r-f plate current I of the modulators is 90° *leading* the r-f oscillator voltage E_1, at the *top* of L_1. Although not shown in the vector diagram, I *lags* the voltage at the *bottom* of L_1 by 90°, since L_1 is connected in push-pull.

Because the plate currents of the modulators are in quadrature with the voltages existing across L_1 in their output circuit, the modulators effectively act as reactance tubes. This was brought out in chapter 3, where reactance tube modulators were discussed, and also in Fig. 3-7. In Fig. 4-13, the plate current I is leading the voltage E_1 by 90°, so

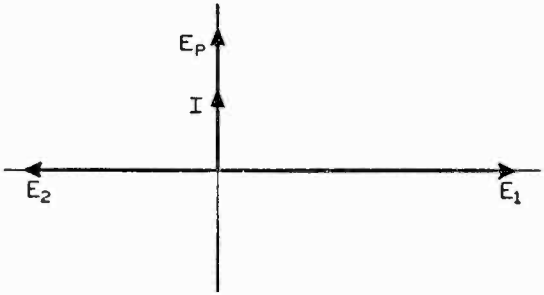

Fig. 4-13. Vector diagram of the voltages and current appearing in the modulator circuit of Fig. 4-12.

the injected reactance from the upper modulator tube would be capacitive. The modulator plate current, I, in the lower modulator tube *lags* the voltage across the *lower* half of L_1, and therefore, this modulator tube injects an inductive reactance. Without any audio voltage applied to the modulators constant values of injected reactance exist across the oscillator tuned circuit, which is part of the initial determining factor of the oscillator frequency. If an audio signal is applied to the modulators, the plate currents of both modulators change in accordance with the varying audio which is superimposed upon the bias to the modulator tubes, which is equivalent to changing the g_m of the tubes. Since the plate currents are quadrature currents, they are referred to as being reactive currents.

The audio signal is applied to the modulator tubes in push-pull, so that the audio voltages on their grids are always of opposite polarity. When on one-half of the audio signal the bias on the upper tube is

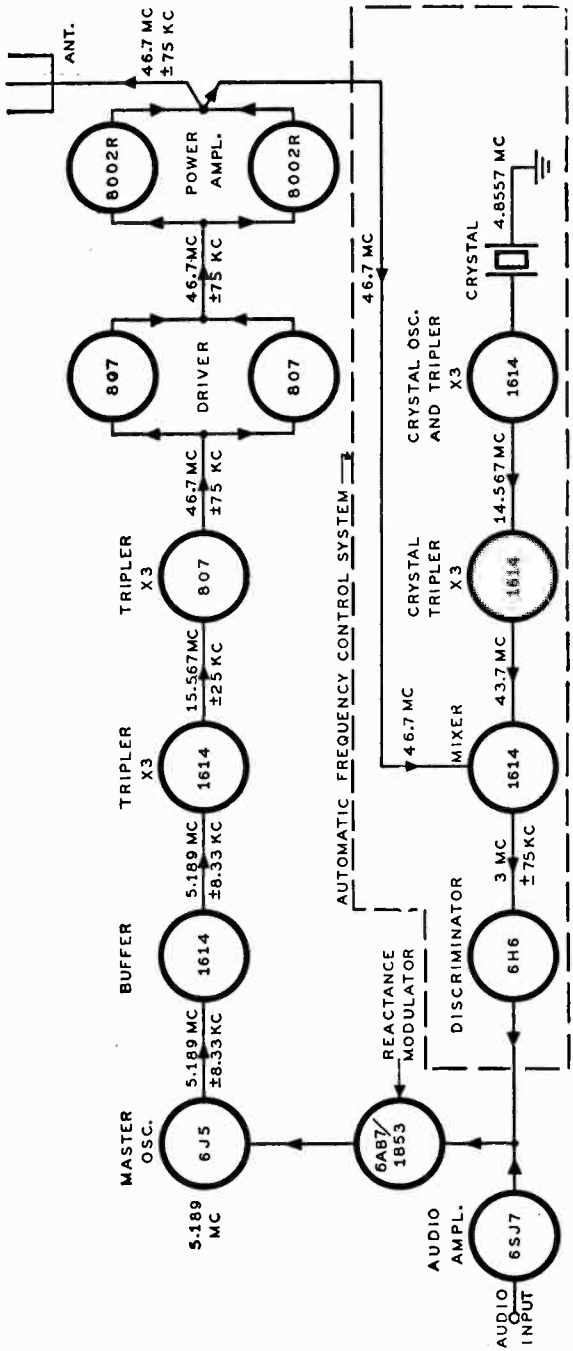

Courtesy CBS

Fig. 4-14. Block diagram of the Columbia Broadcasting System f-m transmitter for the old f-m band. The center frequency was 46.7 mc.

decreased by a certain amount, the bias on the lower tube is increased by the same amount. Or, the g_m of the upper tube is increased while that in the lower tube decreases. The capacitance injected by the upper tube will increase, because it is directly proportional to g_m of the upper tube. The inductance injected by the lower tube will also increase because it is inversely proportional to the g_m of the lower tube, and the g_m is decreasing. Consequently, an increasing capacitance and inductance is injected across the oscillator tank circuit at the same time. Both reactive components cause the frequency of the oscillator to decrease.

When the audio signal is such that the bias on the upper tube decreases, the bias on the lower tube increases. Consequently, the g_m of the upper tube decreases, while in the lower tube it increases. Due to this action the injected capacitance from the upper tube and the injected inductance from the lower tube both decrease, causing an increase in the frequency of the oscillator. Under the same conditions of audio input, the frequency swing that the oscillator is subjected to is greater than if only one reactance tube were used, for the reason that both tubes inject reactances which cause the oscillator to shift in frequency in the same direction. The amplitude of the audio signal determines the amount of oscillator frequency swing (that is, deviation), and the frequency of the audio signal determines the rate of change of the frequency deviation, and thus an f-m signal output is obtained.

From the high side of L_2 some f-m voltage is injected into the grid of the buffer stage which in turn is connected to the frequency multiplication and division systems. The capacitors of the tank circuit are so arranged that C_3 and C_4 are ganged and are varied together by manual means. Capacitors C_1 and C_2 are also ganged, but the shaft of this ganged control is attached to the shaft of the synchronous control motor and thus capacitors C_1 and C_2 are automatically variable to correct for frequency drift of the master oscillator.

THE CBS DIRECT F-M TRANSMITTER

The new FCC frequency allocations giving the 88-to-108-mc band to frequency modulation were released in the fall of 1945. This was just after World War II ended, and many companies had war contracts to terminate, which prevented the immediate production of new f-m transmitters. The Columbia Broadcasting System (CBS), in order to remain on the air on the new band, decided to convert the old-band f-m transmitter to the new band as soon as possible. The conversion idea was adopted because of limitations in time and material at that time. A block diagram of the circuit for the old band is shown in Fig. 4-14 and for the new band in Fig. 4-15. Both employ reactance tubes for direct f.m. and also automatic frequency control systems of the

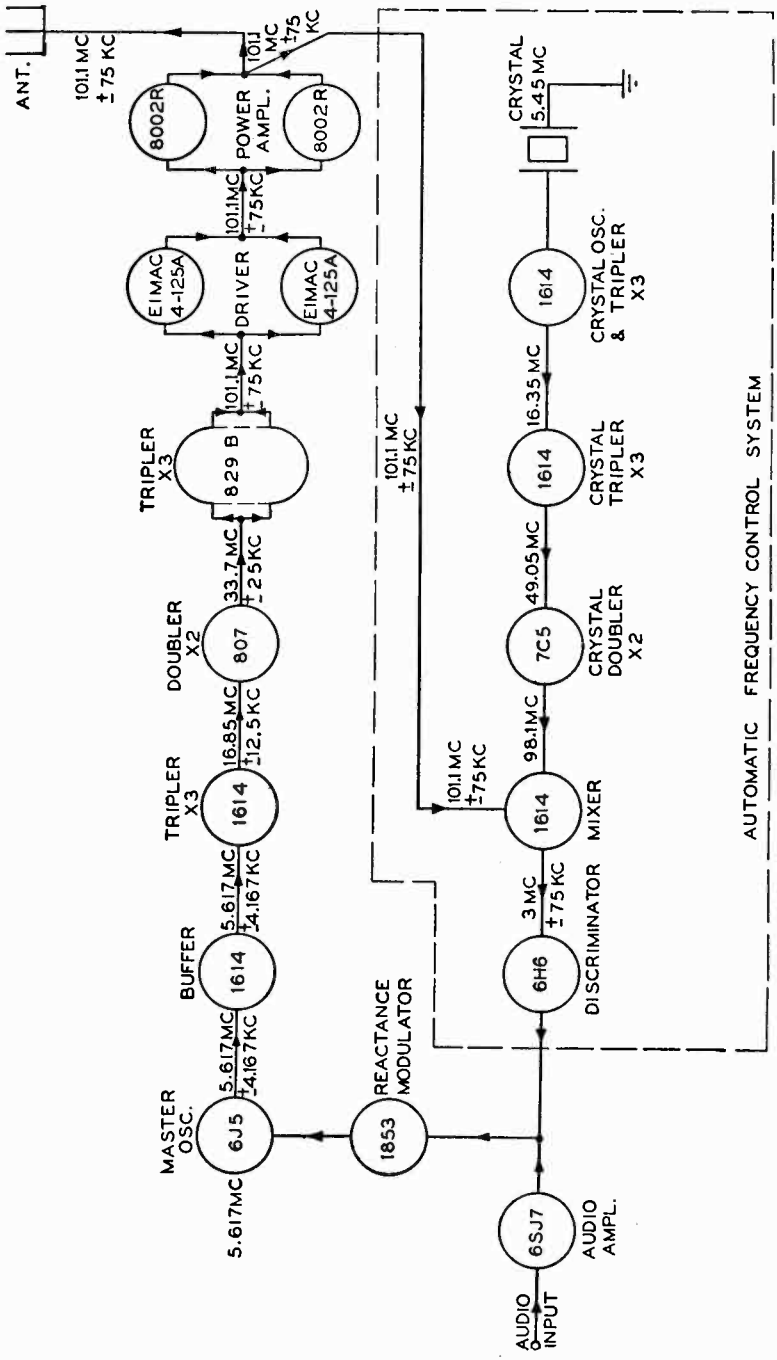

Courtesy CBS

Fig. 4-15. Block diagram of the CBS f-m transmitter for the new f-m band. The new center frequency is 101.1 mc.

electronic kind described in chapter 3. The center frequency of transmission on the old band was 46.7 mc and on the new band it is 101.1 mc.

Referring to Fig. 4-14, the transmitter setup as operated on the old f-m band, a frequency multiplication of 9 is provided by the use of two triplers. Thus the master oscillator center frequency is equal to 46.7 mc/9 or 5.189 mc. At the output of the last tripler, an 807 tube, the f-m output is at its required frequency and is impressed across a push-pull driver stage consisting of two 807's. This push-pull stage is the driver for the final power amplifier stage which is also a push-pull stage and consists of two 8002R's. The peak frequency deviation is shown, with plus and minus signs, as well as the center frequency component of the f-m signal, at the respective input sections to the different stages of the set.

For the automatic frequency control system employed, the output intermediate frequency from the mixer is 3 mc. Some of the 46.7-mc f-m output signal from the final power amplifier stage is injected in this mixer. Also injected into the mixer is a 43.7-mc unmodulated signal from a crystal oscillator system. This crystal oscillator system consists of a 4.8557-mc crystal oscillator and two triplers, so that the final output from this system is 4.8557 $\times$ 9 or 43.7 mc. The function of first tripler and crystal oscillator is accomplished by the same 1614 tube. From the two inputs to the mixer it is readily seen that the difference frequency between 46.7 mc and 43.7 mc is 3 mc. The rest of the afc circuit is of conventional design, where the output of the discriminator is applied to the grid of the reactance tube, thereby opposing any shift of the center frequency of the master oscillator.

In Fig. 4-15 the new f-m circuit is drawn in block diagram form. An extra multiplication stage, an 807 doubler, and an extra crystal multiplier, a 7C5 doubler, are the primary changes in the circuit design. Since the frequency of transmission is changed, the master oscillator and crystal oscillator frequency are likewise changed. The multiplication stages employed are a tripler, doubler, and tripler in the order named. Thus, the total amount of multiplication is 3 $\times$ 2 $\times$ 3, or 18. With the frequency of transmission 101.1 mc, the master oscillator frequency will have to be 101.1 mc/18 or 5.617 mc. Similarly, for a 75-kc peak deviation output for 100 percent modulation the initial peak deviation of the f.m. signal from the modulated oscillator is 75/18 or 4.167 kc. Thus, we obtain an f-m signal of a center frequency of 5.617 mc with an initial peak frequency deviation of 4.167 kc that is impressed across the first frequency multiplier stage, namely a tripler. The last multiplication stage, also a tripler, is a push-pull stage using an 829-B duo-beam power tube. This 829-B multiplier, besides being used as a tripler, is also a driver for the push-pull power driver which utilizes two *Eimac* 4-125A's.

Only two changes were made in the automatic frequency control

system used on the old band. The crystal was changed from 4.8557 mc to 5.45 mc and a doubler tube was inserted between the last tripler and mixer stage. This arrangement made it possible for a higher unmodulated crystal controlled frequency to be injected into the mixer tube. The crystal multiplication setup has the same amount of multiplication as the f-m section. That is 3 × 3 × 2 (tripler, tripler, and doubler) gives a total multiplication of 18. This means that the crystal controlled frequency input to the mixer tube is equal to 5.45 mc × 18, or 98.1 mc. This unmodulated 98.1-mc signal plus the f.m. 101.1-mc signal taken from the output of the final power amplifiers are both injected into the mixer. The output circuit of the mixer is tuned to the difference frequency between these two signals, so that an i-f signal of 3 mc is injected into the discriminator stage. The rest of the action of the control circuit is familiar enough not to warrant any further discussion.

THE NBC DIRECT F-M TRANSMITTER

Before the f-m band of 88 to 108 mc was allocated, the f-m transmitter of the National Broadcasting Company in New York City was transmitting an f-m signal of 45.1 mc. The block diagram for this transmitter is illustrated in Fig. 4-16. It will be noticed that the type of frequency control is an automatic frequency control system (afc) similar to that discussed in chapter 3. The type of modulation is direct

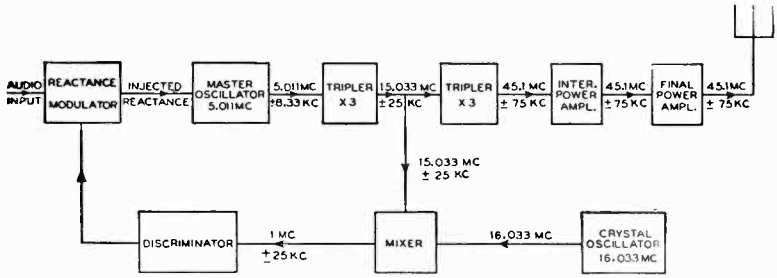

Courtesy NBC

Fig. 4-16. Block diagram of the old band NBC direct f-m transmitter operating on a center frequency of 45.1 mc.

f.m., wherein the modulators inject some reactance into the tuned oscillator circuit. For the center frequency output of 45.1 mc, the master oscillator frequency is tuned to 5.011 mc, due to the use of two tripler multipliers. What we have is 5.011 mc multiplied three times, and the output of the first tripler is equal to 5.011 × 3 or 15.033 mc. This is injected into another tripler which changes the frequency to 15.033 × 3 or 45.1 mc. The 45.1-mc output is then passed through the proper power amplifiers for transmission. The initial amount of peak

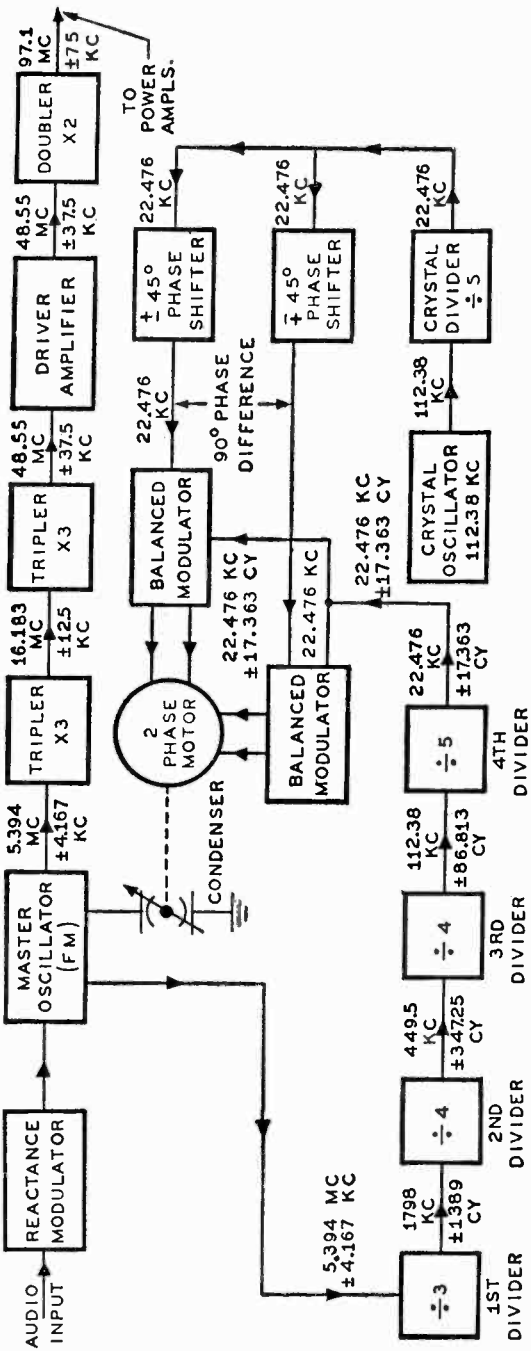

Courtesy NBC

Fig. 4-17. Block diagram of the NBC f-m transmitter operating at 97.1 mc. This differs from the transmitter of Fig. 4-16 primarily by the addition of an extra multiplication stage and a change in the stabilization circuit.

frequency deviation of the f-m signal, as it enters the first tripler, must be equal to 8.33 kc in order that its output, when multiplied 9 times by the two triplers, be equal to 75 kc for 100 percent modulation.

From the output of the first tripler some of the f-m signal of 15.033-mc center frequency component is injected into a mixer stage. Also, into this mixer stage is injected a crystal controlled oscillator frequency of 16.033 mc. In the output circuit of the mixer is a tuned circuit that selects the 1-mc difference frequency between the two input signals. This 1-mc signal is applied to a discriminator tube, and the output from this discriminator is impressed across the grids of the modulator tubes. If the oscillator becomes unstable, this afc circuit functions so that the injected reactance across the oscillator circuit changes in the direction necessary to put the oscillator back on frequency.

For the f-m band of 88 to 108 mc, station WNBC received the frequency allocation of 97.1 mc. Today station WNBC operates only on this new frequency assignment, having discarded the old transmitter setup. Instead of revamping the old circuit they incorporated a new transmitter, the block diagram of which is illustrated in Fig. 4-17. In this transmitter two primary changes have been made, one being the addition of an extra multiplication stage and the other the changing of the frequency control or stabilization circuit.

This is noticed in Fig. 4-17. In analyzing this diagram let us first start with the f-m section. The type of modulation is direct f.m., similar to that used on the old band. That is, reactance tubes frequency modulate the oscillator, and the output is a direct f-m signal which is injected into the multiplication system. Two frequency triplers and one doubler are employed to give a total frequency multiplication of 18 (that is, $3 \times 3 \times 2$). Therefore, since the output frequency is 97.1 mc, the frequency of the master oscillator must be 97.1 mc/18 or 5.394 mc. Likewise, for a 75-kc peak deviation output for 100 percent modulation, the peak deviation of f-m signal as taken from the oscillator-modulator stage is equal to 75 kc/18 or 4.167 kc. This f-m signal of 5.394-mc center frequency component in conjunction with a peak deviation frequency of 4.167 kc is injected into two tripler stages. The respective frequency multiplication is indicated by the values of the center frequency component and peak deviation frequency on the diagram. The output of the second tripler being at 48.55 mc is impressed across a driver amplifier, and the output of this amplifier, still at 48.55 mc, is impressed across another multiplication stage, namely a doubler. This doubler brings the f-m signal to its required value of 97.1 mc and the signal is then injected into the power stages of the transmitter.

Frequency Stabiliation System (RCA)

The frequency stabilization system of this transmitter is motor controlled similar to the system employed by Western Electric. The frequency stabilization system is a design of the Radio Corporation of America (RCA) and is incorporated in the type BTF f-m broadcast transmitters as manufactured by RCA. This frequency control system is shown in block diagram form below the f-m section of NBC's transmitter of Fig. 4-17. It consists chiefly of three sections: One called the frequency division section, another called the crystal oscillator section, and the third called the motor control section.

Part of the output f-m signal from the master oscillator section is fed through a series of frequency divider stages. The division of each stage is plainly marked inside the block diagram for each stage, and the total amount of division is therefore $3 \times 4 \times 4 \times 5$ or 240. This means that the input f-m signal from the modulated oscillator to the first divider being 5.394 mc (and 4.167-kc peak deviation) undergoes a division of 240. Therefore, the output frequency from the last divider stage is 5.394 mc/240 or 22.476 kc and 4.167 kc/240 or 17.363 cycles is the peak deviation. The output from the crystal oscillator of 112.38 kc is put through a divider stage of 5, so that the output from the divider stage is equal to 112.38/5 or 22.476 kc, the same frequency as that from the f-m divider stages. If the master oscillator is stable, its frequency will be 5.394 mc and the output from the f-m dividers 22.476 kc. The output from the crystal divider is split up and is sent through two separate 45° phase-shifting networks so that the phase relationship between the output signals of the two phase shifters is 90°. Both of these signal outputs are fed into separate balanced modulator circuits. Also fed into these balanced modulator circuits is the output signal from the f-m frequency divider system.

The outputs of both these balanced modulators are fed into a four-winding 2-phase motor. If the frequency outputs of both divider systems are the same, the magnetic fields of the motor are steady. However, if the master oscillator becomes unstable and the output frequency shifts from its center component of 5.394 mc, the output from the f-m divider stage changes from its 22.476-kc signal, and a different frequency is impressed across the balanced modulators. These balanced modulators function so that a difference of frequency between their two input signals causes the outputs of the modulators to change the magnetic fields of the motor and the armature of the motor rotates. The shaft of the armature is connected to the rotor shaft of a split stator capacitor in the master oscillator tank circuit. The armature rotates, due to unstability of the master oscillator, turning the oscillator capacitor to the extent that it changes the frequency of the master oscillator back to its stable position. In other words, if the master

oscillator shifts in frequency by an increase of 50 kc, the frequency output of the divider system will be

$$\frac{5394 + 50}{240} = \frac{5444}{240} = 22.685 \text{ kc}$$

This means a difference in frequency between the two inputs to the balanced modulators of 22.685 less 22.476, or 207 cycles. The outputs of the balanced modulators will change the magnetic field of the motor in accordance with the 207-cycle difference and the armature will rotate. The rotation of the armature, according to this 207-cycle difference of the inputs to the balanced modulators, is such that the split stator capacitor is varied just enough to change the frequency of the master oscillator by 50 kc back to its desired value.

THE GENERAL ELECTRIC TRANSMITTER

The *original* f-m transmitters manufactured by the General Electric Company were the direct f-m type employing the regular electronic automatic frequency control system similar to that discussed in connection with the CBS transmitter. The f-m multiplication system in these original transmitters employed two triplers for a total frequency multiplication of 9. In the new f-m transmitters the General Electric Company employs a completely different system. The new system is one of indirect f.m. where p.m. is the initial type of modulation. By using the proper audio frequency correction network the p-m signal is made equivalent to an f-m signal. The method of obtaining the initial amount of phase deviation is new. In these transmitters the famous *Phasitron* tube is employed as the modulator and the operation of the transmitter is based upon this tube. Before we analyze the complete exciter and modulator system, let us first study the Phasitron tube and see how it works.

The GE Phasitron Tube

The Phasitron tube enables us to obtain wide phase deviations, equivalent to a peak frequency deviation of about 175 cycles, from a crystal controlled source of about 200 kc. The tube itself is quite a complicated structure so far as regular electron tubes are concerned. It more nearly belongs to the class of the cathode-ray tube than to any other type, although its size is comparatively small. A cutaway pictorial view of the Phasitron tube is shown in Fig. 4-18, while Fig. 4-19 provides a more technical cutaway view of the functioning elements together with a simplified diagram of the circuit elements to which it is wired. In Fig. 4-19 all the parts shown are definite physical parts, except the so-called electron disk which is formed by a constant stream of electrons emanating from the cathode and focused on anode

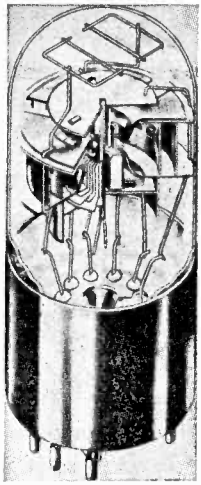

Fig. 4-18, right. Cutaway view of the Phasitron tube, which is used as the modulator and upon which the operation of the GE f-m transmitter is based.

Fig. 4-19, below. Sketch of the functioning elements of the Phasitron tube and a simplified schematic diagram of the circuits to which they are connected. Above and below the electron disk is the deflection system. The deflector grids consist of 36 wires every third one being connected, making three grids each having 12 wires. The voltages indicated in this and the next figure are typical of slightly different operating conditions.

Courtesy of General Electric Co.

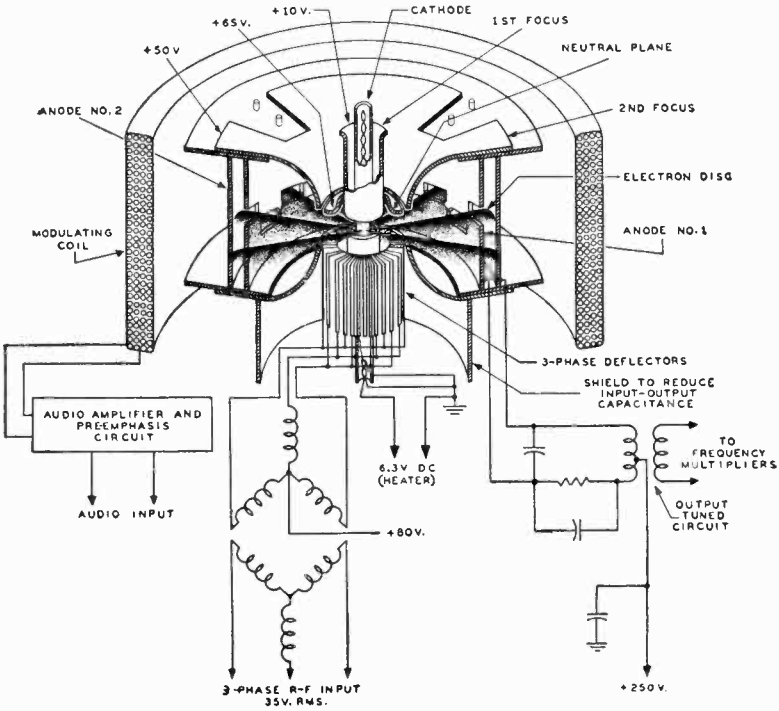

No. 1. A schematic diagram of the Phasitron tube is shown in Fig 4-20 with typical operating voltages shown alongside each electrode.

The heater voltage is at 6.3 volts. When typical operating voltages (such as those indicated in Figs. 4-19 or 4-20) are applied to the tube, electrons begin to flow away from the cathode toward the two

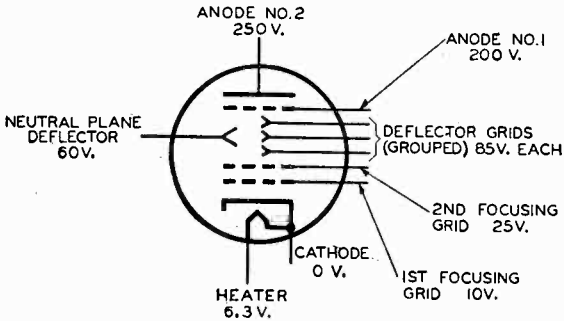

Fig. 4-20. Schematic symbol of the Phasitron tube with typical operating voltages indicated at the various elements.

Courtesy General Electric Co.

anodes. Without any external r-f voltage applied to the tube, the focusing electrodes regulate the electrons flowing away from the cathode so that they flow in a radial fashion and are concentrated into a thin electron disk, the shape of a flat plate. Above and below this disk is a deflection system. Above the electron disk is the so-called neutral plane of the deflector system, and below the disk are the deflector grids. There are 36 deflector wires, so arranged that every third wire is connected together, making 3 grids with 12 connected wires in each. All the deflector grids and the neutral grid have d-c potentials applied. The deflector grids are, however, excited by an additional r-f voltage while the neutral grid is not. Therefore the neutral deflector (referred to as the neutral plane) remains as a source of reference potential for the other deflector grids. The r-f voltage is a 3-phase voltage obtained from a crystal controlled source. This crystal voltage passes through a phase-splitting network making the r-f voltages applied to each deflector grid group 120° out of phase with each other. For correct operating procedure, the amount of r-f voltage should be approximately 35 volts rms as measured between each deflector grid and the neutral plane deflector. These 3-phase voltages as applied to the deflector grids deflect the electron disk so that the outer edge of the disk takes on a sinusoidal shape as seen in Fig. 4-21. In other words, there now exists an electrostatic field between the neutral deflector plane and the deflector grids, due to the application of these 3-phase voltages. This electrostatic field, due to the deflecting action of the deflector grids, distorts the flat electron disk into the shape shown in Fig. 4-21. The electrostatic field also produces an effect as though the sinusoidal electron disk were rotating at

a rate determined by the frequency of the applied 3-phase voltage and the number of deflector wires.

The elements of the Phasitron tube are so arranged that this sinusoidally edged electron disk falls upon the specially constructed anodes of the tube. Both anodes are cylindrical, but anode No. 1 is of special construction. This anode has 24 holes punched into it, so arranged that 12 of these holes appear above and 12 below a certain dividing line. The dividing line is at the level of the electron disk before it is sinusoidally distorted by the application of the 3-phase r-f voltages. Part of this anode appears in Fig. 4-21 in conjunction with the sinusoidally distorted electron disk. A flattened portion of this first anode is also shown in Fig. 4-22. The punched holes are arranged to be in

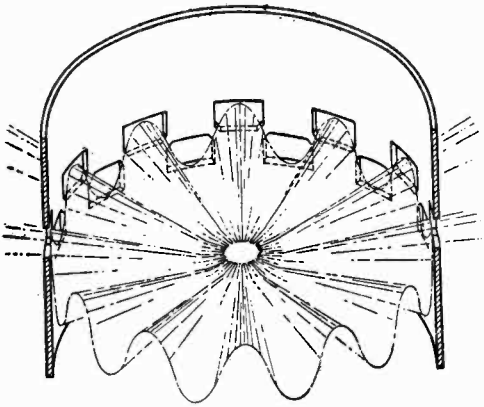

Fig. 4-21, left. A portion of the Phasitron perforated No. 1 anode through which the sinusoidally distorted electron disk flows; under this condition No. 2 anode receives a maximum current.

After General Electric Co.

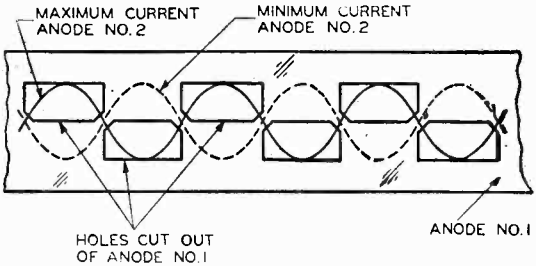

Fig. 4-22, right. The solid sine wave indicates the condition shown in Fig. 4-21. The dotted wave shows the electron disk one-half an r-f cycle later when a minimum current flows in the No. 2 anode.

line with the sinusoidal rim of the electron disk. Anode No. 1 is nearer the cathode and anode No. 2, which is a cylindrical electrode without any holes punched in it, lies directly behind anode No. 1, as illustrated in Fig. 4-19.

When r-f 3-phase voltages are applied to the deflector grids, the electron disk will become distorted, and the edge of the disk will take on a sinusoidal shape. Let us now refer to Fig. 4-22. This diagram shows by the solid line sine wave a picture of part of anode No. 1 at

the instant when the rotating disk is aligned to anode No. 1 so that the upper halves of the sine wave part of the disk are passing through the top 12 holes of the anode, and the lower halves of the sine wave pass through the bottom 12 holes of the anode. Under this circumstance these electrons forming the electron disk are practically all passing through the holes of the first anode and, therefore, hitting the second anode directly in back of it. Consequently, at such an instant there is maximum current flow to anode No. 2 and a minimum current flow to anode No. 1. If the electron disk is rotated by just one-half cycle of the sine wave, the situation will be completely reversed. This is also shown in Fig. 4-22, where the dotted sine wave represents the edge of the electron disk one-half cycle of r.f. later. It is readily seen that the electrons forming the disk no longer pass through the holes in anode No. 1 but that most of them impinge upon anode No. 1 and a very few reach anode No. 2. Under this circumstance, the current flowing to anode No. 1 is a maximum and that flowing to anode No. 2 is a minimum.

For the time between these two instances the current in one anode is decreasing while that in the other is increasing, and after they have reached their maximum decrease and increase, the situation reverses itself. The current that was decreasing in one anode now starts to increase and that which was increasing now starts to decrease.

Connected to the anodes of the Phasitron is a push-pull tuned circuit as shown in Fig. 4-19. The circuit is tuned to the crystal frequency and, since each end of the circuit is connected to an anode, this circuit is excited by the periodic collection of electrons by both anodes. Thus it is seen that the output push-pull circuit connected to the anodes is driven at the crystal frequency but, due to the currents in the anodes, the excitation is in a special time and phase relationship. Inductively coupled to this push-pull circuit is a single tuned circuit which serves as the input circuit for the first multiplier tube, and hence the multipliers get their excitation from this coupling arrangement.

Now we come to the important part wherein the phase modulation is produced by an audio signal. Wrapped around the outside of the glass envelope of the Phasitron is the modulator coil which is solenoid wound. Part of this coil is seen in cutaway view (without the glass envelope of the Phasitron tube shown) in Fig. 4-19. This modulator coil, by means of electromagnetic deflection, phase modulates the electron disk. With the proper input audio signal applied to the modulator coil, a magnetic field is set up by this coil, and the coil is so arranged that the magnetic field is perpendicular to the plane of the electron disk. Due to this magnetic field, the electrons encounter a force such that the sinusoidal ripples of the disk experience a phase shift in direct accordance with the audio modulating signal. In other words, the modulating signal, since it varies at an audio rate, shifts

the phase of the sine wave edge of the electron disk in an increasing and decreasing motion according to positive and negative portions of the audio signal. The magnetic field created by the coil is concentrated, because of the magnetic material of which the second focusing electrode is made, to a narrow portion of the tube at the rim of the deflector grids; proper phase shift action upon the electron disk is then produced within the punched hole regions of the first anode, as seen in Fig. 4-23. Thus, this second focusing electrode serves two

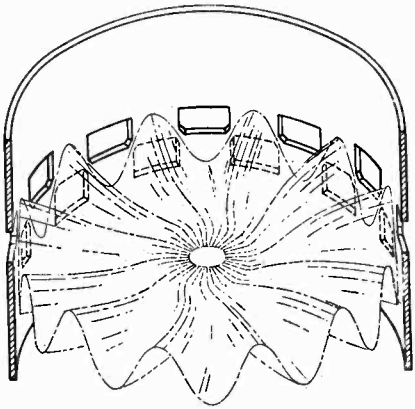

Fig. 4-23. Pictorial representation of the Phasitron electron disk while being phase shifted by the magnetic field set up by the modulating coil.

After General Electric Co.

purposes — electrostatic focusing of the electron disk and electromagnetic focusing of the audio magnetic field.

Since the electron disk is now being changed in phase, according to the audio magnetic field, the output signal of oscillator frequency from the Phasitron, which is coupled to the multipliers, is also changed in phase according to the audio signal. Thus, we have a system of directly phase modulating a high frequency signal. In order to have the output signal from the Phasitron effectively frequency modulated, the impedance of the modulating coil is practically a pure reactance over the complete range of audio frequencies of 50 to 15,000 cycles. As the audio frequency increases, the reactance also increases, in which case the current flowing through the coil decreases. Therefore, as the audio frequency increases, the magnetic field decreases, due to the decrease in current, thus giving the desired inverse frequency effect. This is similar to the effect of the audio frequency correction network in the Armstrong transmitter, wherein an inverse audio frequency network was needed effectively to produce f.m. from p.m.

Consequently, with all of these provisions, the modulation of the Phasitron tube by the audio signal has the effect of speeding up and slowing down the rotation of the electron disk along its edge (as shown in Fig. 4-23) which results in an f-m output signal. The importance of this Phasitron tube is that it can produce wide phase shifts

in the crystal frequency and, with the proper modulation arrangement, these phase shifts are equivalent to an f-m signal that has peak deviations as high as 175 cycles. Due to this wide deviation only a small amount of multiplication is needed as compared with other indirect f-m systems. The amount of phase shift required for this 175-cycle peak frequency deviation does not go beyond the allowable amount of harmonic distortion. The audio frequency harmonic distortion for all frequencies from 50 to 15,000 cycles is less than 1.5 percent rms.

Exciter and Multiplier Units

A block diagram of the exciter unit of the GE transmitter is shown in Fig. 4-24. This part of the system comprises the a-f, r-f, and modulator units. It essentially consists of a crystal oscillator and an r-f

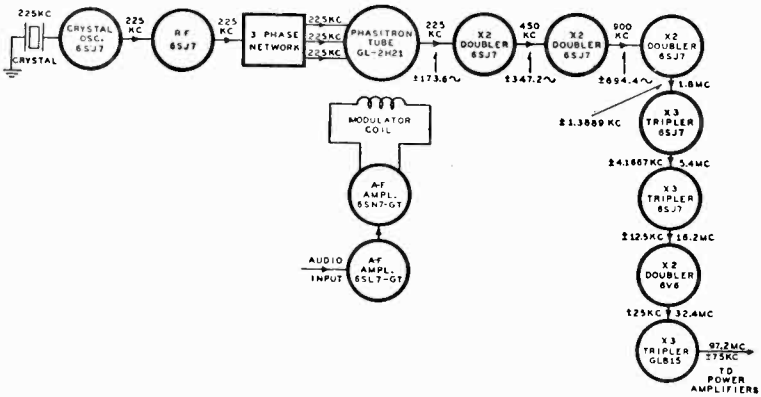

Courtesy General Electric Co.

Fig. 4-24. Block diagram of the General Electric f-m transmitter; the power amplifiers are omitted.

amplifier feeding into the 3-phase network input to the Phasitron tube. Also the audio input is passed through two a-f amplifiers before it is impressed across the modulator coil. The output of the Phasitron tube, being an f-m signal, is fed to a series of seven multipliers having a total multiplication equal to 432. The first three multipliers are doublers using 6SJ7 receiving type tubes, and hence a multiplication of $2 \times 2 \times 2$ or 8 is obtained. The next two multipliers are triplers, also employing 6SJ7 tubes, and their multiplication is 3×3 or 9; from the input to the first 6SJ7 doubler to the output of the last 6SJ7 tripler the total multiplication is 8×9 or 72. The last two multipliers are a doubler and a tripler, respectively, making a multiplication of 2×3 or 6 and a total over-all multiplication of 72×6 or 432. The last

multiplier (a tripler) employs a GL815 tube which, besides being a multiplier, is also the driver for the power amplifier stage succeeding it. The next to the last multiplier, a doubler, uses a 6V6 tube to supply the small amount of power needed to drive the GL815 tripler tube.

For 100 percent modulation, the output f-m signal must have a peak deviation of 75 kc. This means the necessary amount of f.m. that occurs within the Phasitron tube has to be exactly equal to the maximum allowable peak frequency deviation divided by the total amount of multiplication. Thus 75 kc/432 equals 173.6 cycles, which means that the output peak frequency deviation from the Phasitron tube is equal to 173.6 cycles. The individual multiplication of this frequency deviation is illustrated in plus and minus signs next to the particular stages.

If an output f-m signal of 97.2-mc carrier frequency is desired to be transmitted, the frequency of the crystal oscillator would have to be equal to 97.2 mc/432 or exactly 225 kc. This is indicated in Fig. 4-24 along with the respective increase in frequency as the signal is passed through the different multiplication stages. Since the new f-m band is between 88 and 108 mc, the crystal frequency has to be between 88 mc/432, or 203.7 kc, and 108 mc/432, or 250 kc.

A schematic diagram of the crystal oscillator and Phasitron circuit is shown in Fig. 4-25. The crystal oscillator is of the Colpitts electron coupled type wherein the cathode, control grid, and screen grid act as

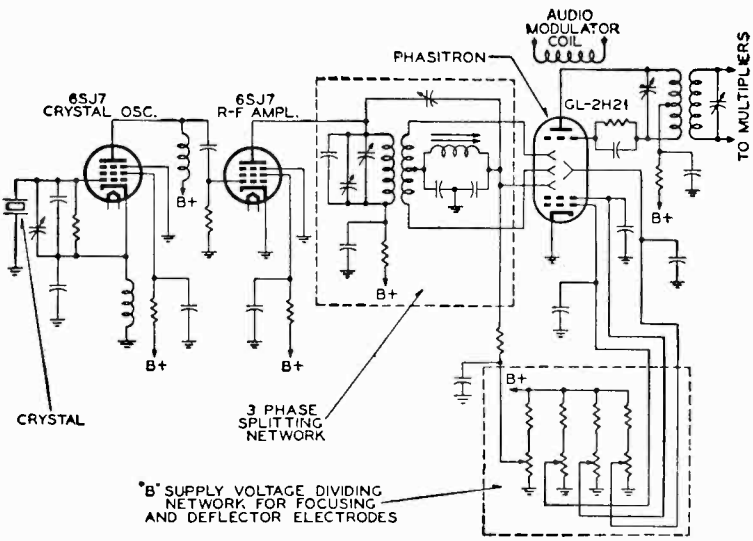

After General Electric Co.

Fig. 4-25. Crystal oscillator and Phasitron circuits of the General Electric f-m transmitter.

the crystal oscillator section of the 6SJ7 tube. In this instance, the screen grid serves as the oscillator anode, and the electron coupling occurs between this anode and the plate of the 6SJ7 tube. The output of the second 6SJ7, an r-f amplifier, is tuned-transformer coupled to a 3-phase-splitting network shown enclosed in the dotted box. The output from this phase-splitting network is applied to the three deflector grids of the Phasitron tube. The deflector grids, neutral plane deflector, and focusing electrodes all receive their B supply through a special voltage divider network consisting of four fixed resistors and four potentiometers. These potentiometers are preset so that the correct amount of B supply voltage is applied to these Phasitron electrodes for the proper operation of the tube.

THE FEDERAL DIRECT F-M TRANSMITTER

The Federal Telephone and Radio Corporation employs direct f.m. by means of injecting reactance into the oscillator tuned circuit. The interesting thing here is that the method of reactance injection is different from what we have studied thus far. Another interesting thing about these transmitters is the crystal automatic frequency control system which is used to stabilize the center frequency of the master oscillator. The modulator-oscillator unit in conjunction with the frequency control system is trade-marked by Federal as their Frequematic f-m modulator system. In the analysis to follow we will discuss three phases of these transmitters. First, the oscillator-modulator unit will be studied, second the frequency multiplier system is discussed, and finally the frequency control system is analyzed.

The Oscillator-Modulator Unit

A simplified schematic diagram of the oscillator and modulator is shown in Fig. 4-26. The oscillator circuit is a conventional Hartley oscillator where the high side of the tuned circuit is connected to the grid of the tube and the cathode is tapped to the inductance of the coil. The modulator tube is a pentode having a tuned circuit in the plate load. Through the use of the "Miller effect" this modulator tube is made to inject a capacitance across the oscillator tank circuit.

An amplifier tube possesses a certain effective grid input impedance which is measured between grid and ground. The value of this grid input impedance changes in accordance with the plate load of the tube. This type of effect is commonly known as the *Miller effect*. If the plate load impedance of the tube has both a resistive and reactive component at a specific frequency, the grid input impedance also contains both a reactive and a resistive component. However, if the plate load impedance is purely resistive, the grid input impedance is purely capacitive.

In the modulator in Fig. 4-26 the plate load is a tuned circuit, so that at its resonant frequency it will offer a pure resistive load. As a result the grid input impedance of the 6AB7 tube will be purely

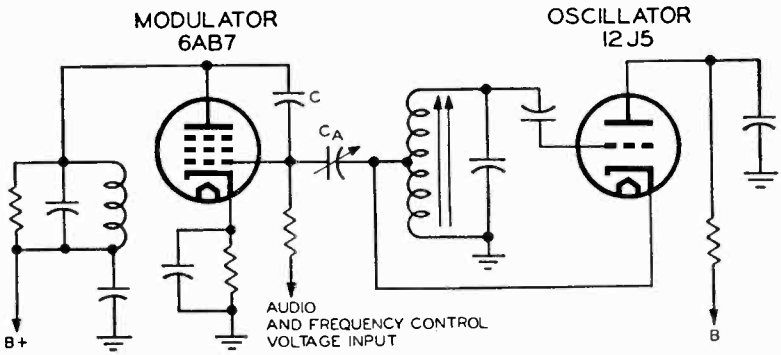

After F. T. & R. Corp.

Fig. 4-26. Simplified schematic of the modulator and oscillator circuits of the Federal f-m transmitter.

capacitive, and a pure capacitance is injected across part of the oscillator tank circuit, thereby changing its resonant frequency. The whole crux of the situation is knowing what determines the value of the grid input impedance; and in this circuit with the resistive plate load, we know that the impedance is capacitive. Though it is beyond the scope of this book to delve into the derivation of the following equation, it can be shown that the grid input capacitance for an amplifying vacuum tube that has a resistive load is as follows:

$$C_i = C_{gk} + (1 + A)C_{gp}$$

where C_{gk} = the interelectrode grid to cathode capacitance,
C_{gp} = the interelectrode grid to plate capacitance,
A = the gain of the tube, and
C_i = the grid input capacitance.

If the tube is a pentode, the gain A can be shown to be equal to the product g_mR_L where g_m is the transconductance of the tube and R_L the effective plate load resistance. Consequently, we can replace A by g_mR_L in the above formula and the result will be:

$$C_i = C_{gk} + (1 + g_mR_L)C_{gp}$$

In Fig. 4-26 an extra capacitance C is inserted between the grid and plate of the tube, so that it will effectively add to the grid to plate interelectrode capacitance C_{gp}. The grid input capacitance C_i then becomes:

$$C_i = C_{gk} + (1 + g_mR_L)\ (C_{gp} + C)$$

The value of the C_{gp} for the 6AB7 tube is equal to 0.015 $\mu\mu f$, and the value of C used in this transmitter is much higher than C_{gp} (being

5 $\mu\mu f$). Consequently, in the foregoing equation the value of C_{gp} can be neglected for computation purposes, because its effect will be negligible. Besides the actual value of the grid-to-cathode interelectrode capacitance C_{gk}, stray wiring capacitance also must be taken into account, so that we may consider the over-all effective grid-to-cathode capacitance of the 6AB7 tube to be equal to about 15 $\mu\mu f$. This takes into account the 8 $\mu\mu f$ "input capacitance" of the 6AB7 tube itself. Under these circumstances, the final equation for the input capacitance is the following:

$$C_i = 15 + (1 + g_m R_L)5 \text{ (neglecting } C_{gp})$$
$$C_i = 15 + 5 + 5\, g_m R_L$$
$$C_i = 20 + 5\, g_m R_L \text{ or } 20 + 5A$$

This last equation tells us that the value of the input grid capacitance is equal to a constant, namely 20 $\mu\mu f$ plus a variable component which depends upon the g_m of the tube. This variable component is equal to the capacitor C (5 $\mu\mu f$) multiplied by the load resistance and g_m of the tube. If the value of R_L is kept constant along with C, g_m is the only variable, and the value of C_i can be made to change in accordance with the g_m of the tube.

If no audio signal is applied to the modulator grid, a fixed value of g_m exists, and thus a fixed value of C_i exists. The g_m of the tube, under these static conditions, depends upon the supply voltages and the bias on the tube, which consists of the fixed cathode bias plus the control circuit voltage impressed onto the grid..For there to be a resistive load in the modulator plate circuit, the tuned circuit must be resonant to the frequency of the master oscillator. If this plate circuit is detuned in any manner whatsoever by drift, or by changing of the oscillator frequency due to the modulation effect, there will be a resistive component in addition to the capacitive component in the grid input impedance of the tube. This is undesirable, because the resistive component in the grid input impedance will also be reflected across the oscillator tank circuit thereby introducing a-m effects. In order that no appreciable detuning occur, the tuned plate circuit of the modulator tube is made very broad (that is, the plate tank circuit is given a low Q) by paralleling a resistor across it. This is evident in Fig. 4-26.

Under these circumstances of a low Q tank circuit in the plate of the modulator tube and no audio applied to the modulator tube, a specific fixed value of grid input capacitance is injected across the oscillator tank circuit between the tap on the oscillator tank coil and ground. Therefore, the frequency of operation of the oscillator with no signal applied is dependent upon the inductance and capacitance of the oscillator tank circuit plus the value of the injected capacitance between the tap on the oscillator tank coil and ground.

With an audio signal applied, the g_m of the tube changes (as discussed under the topic of reactance tubes in chapter 3), and the last

equation encountered reveals that the value of the grid input capacitance also changes, thereby varying the resonant frequency of the oscillator tuned circuit. Because the g_m changes with change in audio amplitude, the frequency of the oscillator likewise changes in accordance with the changing audio amplitude. The result is that the oscillator signal becomes frequency modulated with a peak frequency deviation proportional to the *amplitude* of the audio modulating signal and a rate of change equal to the *frequency* of the audio modulating signal.

A series of measurements were taken on this modulator stage with various values of bias between the grid and ground of the modulator tube, and the gain of the stage was computed. The method was very simple. An r-f vacuum tube voltmeter was placed between grid and ground and another between the plate and ground of the tube, and the ratio of these two vacuum tube voltmeter readings, as a function of the grid voltage E_c, was determined to be the gain A. In Table 3 for different values of E_c, the gain A and the computed values of C_i are tabulated.

TABLE 3

E_c (volts)	A (gain)	C_i ($\mu\mu f$)	C_A+C_i ($\mu\mu f$)	$C_A \times C_i$ ($\mu\mu f$)	C_R ($\mu\mu f$)	C_T ($\mu\mu f$)	C_D ($\mu\mu f$)	f_D (kc)
5	16.90	104.5	159.5	5750	36.1	8.30	1.55	—13.20
4	15.50	97.5	152.5	5360	35.2	8.10	1.35	—11.50
3	13.80	89.0	144.0	4900	34.0	7.84	1.09	— 9.30
2	12.10	80.5	135.5	4430	32.7	7.52	.77	— 6.55
1	10.3	71.5	126.5	3930	31.0	7.14	.39	— 3.31
0	8.56	62.8	117.8	3450	29.3	6.75	0	0
—1	7.22	56.1	111.1	3080	27.7	6.38	— .37	3.15
—2	5.75	48.8	103.8	2680	25.8	5.95	— .80	6.80
—3	4.60	43.0	98.0	2360	24.1	5.55	—1.20	10.20
—4	3.63	38.2	92.2	2100	22.5	5.18	—1.57	13.3
—5	2.79	34.0	89.0	1870	21.1	4.85	—1.90	16.1

Adjustable coupling capacitor C_A in the circuit of Fig. 4-26 is inserted to couple the modulator grid circuit to the oscillator tank. This capacitor is made adjustable, so that for a certain change in grid voltage, a fixed frequency swing (that is, frequency deviation) is obtainable at any particular oscillator frequency. If this capacitance C_A were connected to the high side of the oscillator tank coil, a great deal of r-f signal from the oscillator would appear on the modulator grid. This is not wanted, so the capacitance C_A is tapped to the oscillator coil, reducing this value of injected r-f signal, and, hence, the injected grid input capacitance appears across only part of the oscillator tank coil.

The actual capacitance that is injected across the cathode tap of the

12J5 oscillator tank coil is determined by the input capacitance C_i of the modulator tube in series with the variable capacitor C_A. Since these two capacitances are in series their total capacitance, call it C_R, is as follows:

$$C_R = \frac{C_A \times C_i}{C_A + C_i}$$

As used in this experimental run, the value of C_A was measured on a Q meter and found to be equal to 55 $\mu\mu f$. Consequently, from the different values of C_i in conjunction with C_A, a series of values of $C_A \times C_i$, $C_A + C_i$, and hence C_R were computed as shown in Table 3.

The value of C_R is not the actual capacitance injected across the complete oscillator tank circuit but only across the tapped cathode part of the tank. To determine the effective value of injected capacitance across the entire oscillator tank a so-called transfer ratio between the tapped portion and the whole coil was found. The transfer ratio is equal to some constant value, designated as the letter K, and from this known value of K the final total effective capacitance, C_T, across the entire oscillator tank is equal to:

$$C_T = KC_R$$

where C_R is as explained before. From experiment K was found to equal 0.23, and therefore C_T was equal to 0.23 C_R. Next to the column of C_R in Table 3 are the computed values of C_T, using K equal to 0.23.

The next column gives the change in effective injected capacitance, C_D, from the reference value of C_T when E_c is zero. When E_c is zero, C_T is 6.75; therefore,

$$C_D = C_T - 6.75$$

For example, for 5 volts E_c the change in capacitance C_D is found to equal 1.55 $\mu\mu f$. This was found by subtracting the 6.75 $\mu\mu f$ capacitance of C_T for 0 volt E_c from the 8.30 $\mu\mu f$ capacitance of C_T for 5 volts E_c. For 4 volts E_c, 8.10 $\mu\mu f$ exists for C_T and from this, 6.75 $\mu\mu f$ of C_T for 0 volt E_c is subtracted from the 8.10 $\mu\mu f$ to give C_D equal to 1.35 $\mu\mu f$ and so on.

From experiment it was further found that the amount of change in frequency (that is, frequency deviation) is equal to —8.5 times the change in capacitance C_T. In other words:

$$f_D = -8.5\, C_D$$

where f_D equals the *change* in frequency and C_D equals the *change* in capacitance C_T.

A curve of grid voltage E_c versus computed frequency deviation is shown in Fig. 4-27 (A). This curve is a theoretical sensitivity curve in which the frequency deviation between +2 and —2 volts is approximately 13 kc, indicating the sensitivity to be 13/4 or 3.25 kc per volt. For comparison purposes an experimental sensitivity curve was

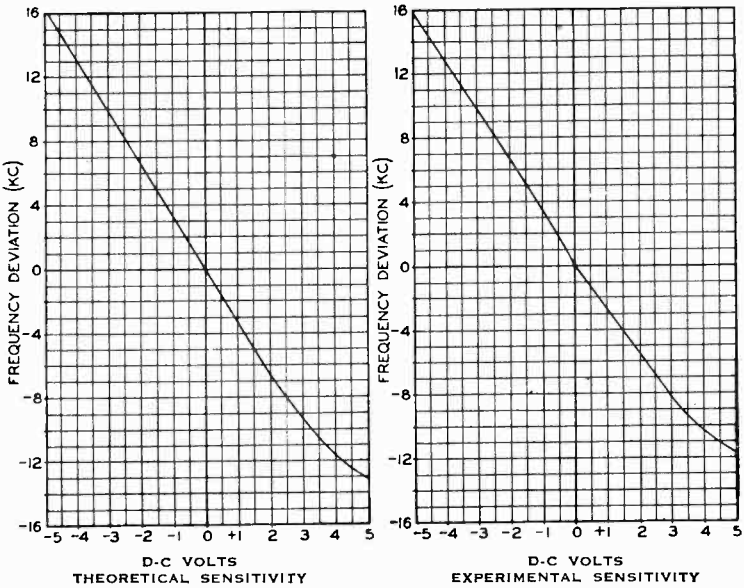

Courtesy F. T. & R. Corp.

Fig. 4-27. Grid voltage, E_c, plotted against computed frequency deviation (A) and grid voltage vs. experimental frequency deviation (B). The difference between the calculated and experimental deviation was 8 percent.

also run and appears in Fig. 4-27 (B). From this curve the frequency deviation between +2 and —2 volts E_c is approximately 12 kc, showing the sensitivity to be 12/4 or 3.0 kc per volt. The percentage variation between the theoretical sensitivity of 3.25 kc per volt and experimental sensitivity of 3.0 kc per volt is found to be only 8 percent, which indicates that the theoretical curve is a good approximation.

Frequency Multiplier System

In Fig. 4-28 a block diagram of the Federal f-m transmitters is illustrated. It consists primarily of three sections, namely the oscillator-modulator section, the frequency multiplier section, and the master oscillator control system. The master oscillator and modulator sections have already been discussed. Let us now examine the frequency multiplier system. F-m output from the oscillator-modulator circuit is passed through a 6AB7 buffer amplifier, and the f-m output from this buffer is injected into a system of frequency multiplier tubes consisting of three doublers and one tripler making the total frequency multiplication equal to $2 \times 2 \times 2 \times 3$ or 24 times. Therefore, for the center frequency of transmission of 88 to 108 mc the master oscillator frequency must lie between 88 mc/24 or 3.66 mc and 108 mc/24 or

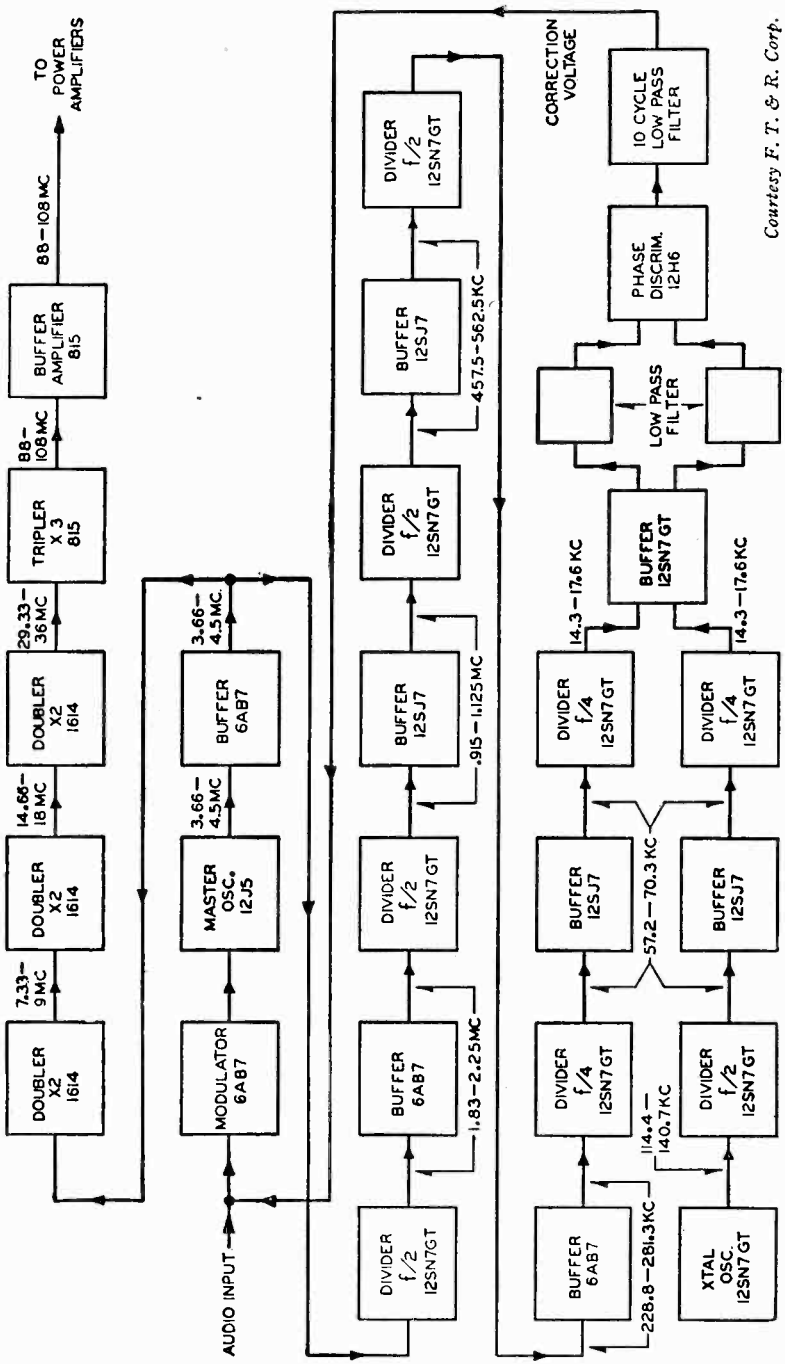

Courtesy F. T. & R. Corp.

Fig. 4-28. Block diagram of the Federal f-m transmitter with the power amplifier section omitted.

4.5 mc. The variable inductance in the oscillator tank circuit as seen in Fig. 4-26 can be preset, so that the master oscillator can be at any frequency within the range of 3.66 to 4.5 mc. For 100 percent modulation or 75-kc peak deviation output from the power amplifier, the peak deviation of the f-m oscillator should be 75 kc/24 or 3125 cycles, no matter what the center frequency of the oscillator may be.

The last multiplication stage is an 815 tube which is used to drive the next 815 buffer which in turn is the driver for the following power amplifier stage.

Frequency Control System

The frequency control system used to stabilize the center frequency of the master oscillator is more intricate than the rest of the transmitter and just as important, because good center frequency stabilization is one of the prime requisites for direct f-m transmitters.

The control system essentially consists of taking some of the master oscillator signal, dividing it, and injecting it, together with another signal, crystal fixed, into a special control circuit. This is similar to the Western Electric and RCA f-m transmitters where frequency division is used. However, in the latter transmitters the special control is exercised by mechanical means, (that is, a motor), but in the Federal transmitters a *phase discriminator* is used as the special control, somewhat similar to an afc circuit. Let us now examine the rest of the block diagram of Fig. 4-28 and then separately study the circuit of the phase discriminator.

Part of the output from the master oscillator buffer amplifier is sent through a series of six divider stages. These divider stages are multivibrator circuits in conjunction with buffer amplifiers. Glancing at Fig. 4-28 we see that the first four divisions are by 2 and the next two divisions are by 4. This means that the frequency of the master oscillator is divided by a factor $2 \times 2 \times 2 \times 2 \times 4 \times 4$ or 256 times. In other words the master oscillator frequency undergoes a complete division by 256. The relative frequency divisions in conjunction with frequency range of the master oscillator are indicated next to the individual divider stages, the final output frequency being in the range of 14.3 to 17.6 kc. The output, at some one frequency, is injected into one triode section of a 12SN7GT tube acting as a buffer.

A crystal oscillator and divider system is also used where two dividers are employed, one dividing by 2 and the other by 4, so that the final output crystal-controlled frequency can be anywhere in the range of 14.3 to 17.6 kc according to the frequency of the crystal that is chosen. This output frequency, *which is of the same frequency range* as the master oscillator frequency output from its divider stages,

is injected into the other triode section of the duo triode 12SN7GT buffer tube. Due to the complete division of 8 the crystal oscillator chosen must fall within the frequency range of 114.4 to 140.7 kc in order to have the input crystal frequency to the 12SN7GT buffer tube within the range of 14.3 to 17.3 kc.

As a result of this complete division of 256, the peak deviation change of ±3125 cycles of the f-m signal from the master oscillator is reduced greatly. It is decreased to the point where the f-m master oscillator signal input to the 12H6 discriminator stage (at a frequency somewhere within the range of 14.3 to 17.6 kc) has an equivalent phase deviation so small, that its effect of causing undue phase shift can be neglected.

The system of frequency control of the master oscillator is based upon the action of a phase discriminator circuit. To understand this phase discriminator more thoroughly, let us examine a schematic diagram of this circuit as used in the Federal transmitters. This diagram is shown in Fig. 4-29. A duo-diode 12H6 tube is used as the phase

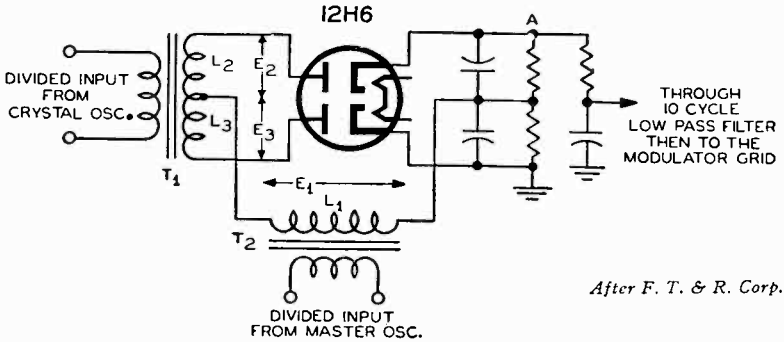

Fig. 4-29. The phase discriminator circuit used in the Federal f-m transmitter.

discriminator. The important feature of this type of phase discriminator is the untuned input transformer, which decreases the chance that the discriminator circuit characteristics will change with input frequency. The circuit arrangement provides equal but 180° out-of-phase voltages across each half of the center-tapped secondary of T_1. These voltages are designated as E_2 across half L_2 and E_3 across half L_3. This 180° phase relationship is further indicated in the vector diagrams of Fig. 4-30 where voltage vectors E_2 and E_3 are seen to be 180° out of phase with each other. These voltages will be at the output frequency of the frequency dividing systems — namely, somewhere within the range of 14.3 to 17.6 kc. Since the input to T_1 is crystal controlled, its frequency is considered to be stable, and con-

sequently the frequency of voltages E_2 and E_3 never changes appreciably after a preselected crystal frequency has been chosen.

Into the primary of transformer T_2 is injected the divided input from the master oscillator, and by transformer action a voltage E_1 appears across the secondary L_1. If the frequency of the input to T_2 is the same as that into T_1, voltage E_1 will be exactly 90° out of phase with both voltages E_2 and E_3. This is shown in the vector diagram of Fig. 4-30 (A). The two diodes of the 12H6 tube receive the same

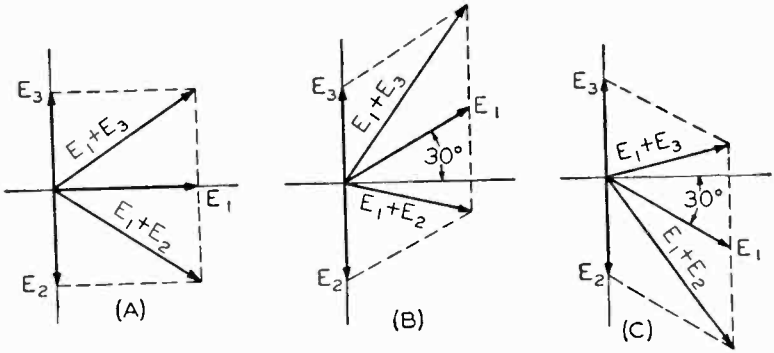

Fig. 4-30. Vector diagrams of the circuit of Fig. 4-29. If the frequency of the input to T_1 is the same as that into T_2, then E_1 will be 90° out of phase with E_2 and E_3, as shown in (A). If the input to T_2 changes, then the relationship of E_1 to E_2 and E_3 changes in phase, as shown in (B) and (C).

applied voltages under these circumstances, and since they are differentially connected, no output will appear across their load resistors between point A and ground in Fig. 4-29. In other words voltage E_1 is common to both diodes, and thus the upper diode receives the series voltages of E_1 and E_2 and the lower diode receives the series voltages of E_1 and E_3. The vector additions of these voltages are illustrated in Fig. 4-30 (A), and these resultant voltages show that both diodes receive the same voltage. Hence the individual drops across their respective load resistors, being equal but of opposite polarity, cancel each other.

If the master oscillator drifts in frequency above or below its operating point, the input frequency to transformer T_2 will likewise shift, and the input frequency to T_2 and T_1 will be different since the crystal frequency remains fixed. The phase discriminator then functions to correct this master oscillator instability. With frequency input to T_2 changing, the relative *phase relationship* between voltages E_1 and E_2 and between voltages E_1 and E_3 also changes. The phase relationship change between these voltages makes the voltages applied to the two diodes different. This is indicated in the vector diagrams of Fig.

4-30 (B) and (C). In Fig. 4-30 (B) the voltage E_1 is assumed, for discussion purposes, to have a change in frequency that is equivalent to positive phase displacement of 30° from its original position, and in Fig. 4-30 (C) the same amount of frequency change is assumed but in the opposite direction. Therefore, the vector diagrams are illustrative of instances where the master oscillator frequency drifts above or below its true operating frequency. In Fig. 4-30 (B) with a positive phase increase, resultant voltage vector $E_1 + E_3$ which exists across the lower diode section of the 12H6 tube is seen to be greater in magnitude than voltage $E_1 + E_2$ across the other diode. Hence greater current will flow in the lower diode section and point A of Fig. 4-29 will be negative with respect to ground. In Fig. 4-30 (C) with a negative phase displacement, the situation is reversed, with the upper diode's voltage $E_1 + E_2$ greater than the lower diode voltage $E_1 + E_3$, and hence a greater current flows in the upper diode. This makes the voltage drop between point A and ground of Fig. 4-29 such that point A is positive with respect to ground.

Thus we have the phenomenon of a variable polarity existing at point A, and the value of the voltage at this point is determined by how much the master oscillator shifts or drifts in frequency. If this voltage at point A is injected into the modulator grid together with the audio (as it really is), this voltage at point A will change the g_m of the modulator tube and hence the value of the input grid capacitance, so that it will correct the oscillator frequency back to its operating value, and thus stability will be maintained.

THE RAYTHEON INDIRECT F-M TRANSMITTER

The Raytheon f-m transmitter of today operates on the basis of obtaining a p-m wave but, through the use of the audio correction network, this p.m. is made equivalent to f.m. Thus the over-all method is called indirect f.m. As will be recalled, this is the principle used in other indirect f-m transmitters, such as Major Armstrong's.

The process of modulation used in these transmitters is different from anything yet discussed. In the two indirect f-m transmitters described so far, the p-m signal was obtained in one by an initial process of a.m., followed by shifting the double sideband of this signal by 90°, and recombining this double sideband with the initial carrier to obtain the p-m signal (or indirect f-m signal). Use of a special tube, the Phasitron, accomplished the same result in the other transmitter. In the Raytheon transmitters, the initial process is one of p.m., similar to the method discussed in the section on phase modulators in chapter 3. The amount of peak phase deviation, and hence equivalent frequency deviation, is quite small for this type circuit, so that quite a number of multiplication stages are needed. To overcome the need for a frequency conversion system, six similar phase modulators are

used in cascade. In this way six times the initial phase deviation of a single modulator is obtained for the same audio input to each phase modulator. The master oscillator frequency is crystal controlled, as is natural for most indirect f-m transmitters and, hence, center frequency stabilization is not needed. Let us first analyze the transmitter from an over-all block diagram view of it, and afterward we will study the schematic arrangement of the phase modulator.

In Fig. 4-31 a block diagram of the Raytheon indirect f-m transmitter is illustrated. It essentially consists of two sections: the oscil-

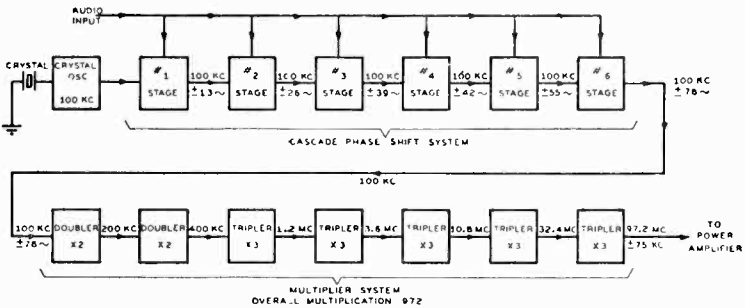

Fig. 4-31. Block diagram of the Raytheon indirect f-m transmitter, omitting the power amplifier stages.

lator-cascade phase modulator part and the multiplier part. The output of the multipliers is fed to the power amplifier section of the transmitter. The frequency multiplier stages comprise two doublers and five triplers, so the over-all amount of multiplication is equal to 972 times ($2 \times 2 \times 3 \times 3 \times 3 \times 3 \times 3$, which equals a multiplication of 4 for the doublers and a multiplication of 243 for the triplers and 4×243 equals 972). Since the f-m band is 88 to 108 mc, the value of the crystal oscillator can be anywhere between the range of 88 mc/972 or 90.65 kc and 108 mc/972 or 111.11 kc. In brief, the crystal oscillator will be somewhere in the range of 100 kc. Under the assumption that the crystal is exactly 100 kc, the center frequency component of the transmitting signal is consequently 100 kc $\times$ 972 or 97.2 mc. The respective values of the center frequency, before each individual multiplication stage, are indicated in the block diagram of Fig. 4-31 for a 100-kc crystal. To obtain a final output peak frequency deviation of 75 kc, for 100 percent modulation at the lowest audio frequency, the amount of peak frequency deviation of the signal before it enters the frequency multiplication stages (that is, the deviation output from the last of the cascade phase modulators) should be equal to 75 kc/972 or approximately 78 cycles. The amount of peak phase deviation from one phase modulator is about 25°. If this phase deviation is multiplied by the lowest audio frequency of

30 cycles and then divided by the number of degrees in one radian (57.3), the equivalent peak frequency deviation will be obtained. Thus $(25 \times 30)/57.3$ is found to be equal to about 13 cycles. This is the peak frequency deviation output from one phase modulator and, in order to obtain a peak frequency deviation input of 78 cycles to the multiplier system, 13 cycles must be multiplied by 6.

It would be quite easy just to inject the frequency output of 100 kc ± 13 cycles into a doubler and tripler multiplier and obtain a peak deviation of 78 cycles, if the 100-kc carrier signal were not also multiplied 6 times. The latter is definitely undesirable because a frequency conversion system then would be required to give a final output signal correct in center frequency as well as deviation. Under these circumstances, six separate phase modulators are used and connected in cascade so that each phase modulator produces a phase shift equal to a peak frequency deviation of 13 cycles. The cascaded arrangement of phase modulators has the effect of *adding* the individual frequency deviations together, giving a total peak frequency deviation of 78 cycles at the output of the complete modulator system, while the center frequency component remains the same as the frequency of the crystal oscillator, namely 100 kc for the case illustrated in Fig. 4-31.

Each modulator stage is so arranged that the same audio voltage is injected into each stage, that is, the audio voltages controlling the amount of phase shift are connected in parallel. The r-f voltage inputs to these modulators are the ones that are connected in cascade.

The Constant Impedance Phase Shift Modulator

One very important feature of a phase modulator is that the output signal must be shifted in phase but not in amplitude. This is a fundamental rule for correct p.m., as stated before in this text. For the output signal from the modulator to remain constant in amplitude, the impedance in the output circuit should remain constant in amplitude for all audio modulating voltages injected. To satisfy this requirement a constant impedance network is inserted in the output of the phase shift modulators. Before examining the actual circuit of a single phase shift modulator and discovering how the audio signal shifts the phase of the r.f., let us examine a simplified circuit of the constant impedance network used in this system.

In Fig. 4-32 is shown a simplified schematic diagram of this constant impedance network as used in the Raytheon indirect f-m transmitter. In this circuit the variable resistance R determines the phase shift of the network, and, if R is made variable according to an audio voltage, the phase shift occurring will be in conformity with the varying amplitude of the audio signal. The phase shift that R im-

poses upon the circuit can be anywhere between ±90°. Let us consider the two extremes of operation of the variable resistance R, namly, when its resistance is zero and when it is infinite.

From Fig. 4-32 it will be noticed that when R has zero resistance, it is as if R were short-circuited, and the low end of capacitor C is effectively grounded. Under these circumstances the current that

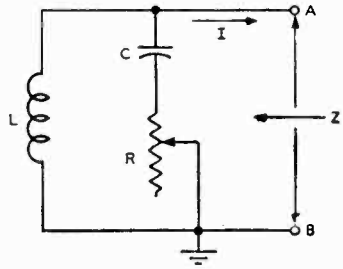

Fig. 4-32, right. Simplified schematic of a constant-impedance network as used in the Raytheon indirect f-m transmitter.

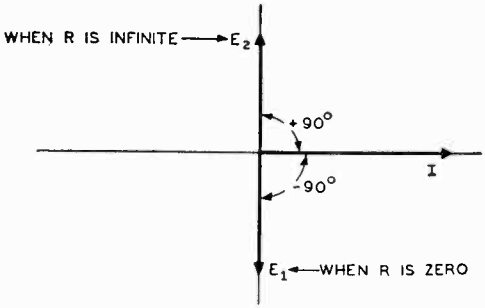

Fig. 4-33, left. Vector representation of the relationships existing in the constant-impedance network of Fig. 4-32 when R is zero and when R is infinite.

flows in the circuit is purely reactive (considering only a pure inductance and capacitance). If the value of the inductive reactance is made greater than the capacitive reactance (twice as great in this problem) at the crystal oscillator frequency, the parallel circuit is predominantly capacitive, and the total effective current I flowing through the circuit will be leading the voltage across it by 90°. This is shown in the vector diagram of Fig. 4-33, where current vector I is seen to be leading voltage vector E_1 by 90°.

If, at the other extreme, the value of R increases to an infinite value, it is as if the resistance were open-circuited. In this case the capacitor has no effect, because one end is considered to be open. Consequently, the circuit is strictly inductive, and the current I lags the voltage across the circuit by 90°. This is also indicated in the vector diagram of Fig. 4-33 where voltage vector E_2 represents the voltage across the circuit when R is effectively infinite. With varying values of R the phase shift will be somewhere between ±90°. Now let us return to the topic of the constant impedance of the network of Fig. 4-32.

If the inductive reactance is made equal to twice the capacitive reactance, the magnitude of the impedance Z seen looking into terminals A, B of Fig. 4-32 will be constant for all values of R. This statement can be proved mathematically, but its proof is beyond the scope of this text, as it involves higher mathematics. The magnitude of the impedance will be constant and equal to the inductive reactance (or twice the capacitive reactance.)

Replacing the variable resistance R in this network by the dynamic plate resistance of a tube, and having this resistance varied by an input audio signal will phase modulate an r-f voltage impressed across the network by an r-f amplifier. This was simply explained in chapter 3 with reference to Figs. 3-11, 3-12, and 3-13. However, the plate resistance of the r-f tube (that injecting the r-f signal across the circuit) and the series resistance of the coil has a slight effect on the phase shift of the circuit. However, the values of these two resistances have a negligible effect on the magnitude of the constant impedance network.

It has been found that, when the variable resistance R is replaced with the dynamic plate resistance of a tube, it is not possible to obtain the necessary frequency deviation for 100 percent modulation at the lowest audio frequencies, because the voltage on the grid of this tube at these low frequencies is very critical and distortion may result. To make sure that the audio modulation does give the maximum amount of frequency deviation, a vacuum tube is used as the source of variable R, but the dynamic plate resistance does not take the place of R. To understand what is done, an actual circuit for a single-stage phase modulator is shown in Fig. 4-34.

The 6SJ7 tube serves as the r-f amplifier and impresses an r-f voltage across the constant impedance network consisting of coil L in parallel with the series combination of capacitor C and one section of a duo-triode 6SN7GT tube called the *resistance tube*. The constant impedance part of this circuit is the same as that in Fig. 4-32, with one section of the 6SN7GT tube serving the purpose of the variable resistance R in Fig. 4-32. The resistance between the cathode and ground of the 6SN7GT tube varies in accordance with the audio impressed on the grid of the same tube, thereby shifting the phase of the r-f voltage appearing across the inductance L. The 6SN7GT cathode resistor R_K is not bypassed so that the audio signal currents flow through R_K. The value of R_K and the applied r-f voltage across the constant impedance network are so chosen that there is a constantly changing value of resistance across the cathode to ground circuit of the 6SN7GT resistance tube. Hence, the correct value of phase shift is obtained for the proper output deviation. The value of the resistance appearing between the cathode to ground of the 6SN7GT tube is somewhat similar to that of an ordinary cathode follower.

The complete cascaded phase shift modulator employs nine tubes. Six of these are 6SJ7's and serve the purpose of r-f amplifiers. The other three tubes are 6SN7GT duo-triode amplifiers which are employed as the resistance tubes with one section being used to supply the varying resistance for each phase modulator stage. All the grids of the 6SN7GT tubes are connected in parallel and therefore receive the same audio modulating signal input. If all the single modulator

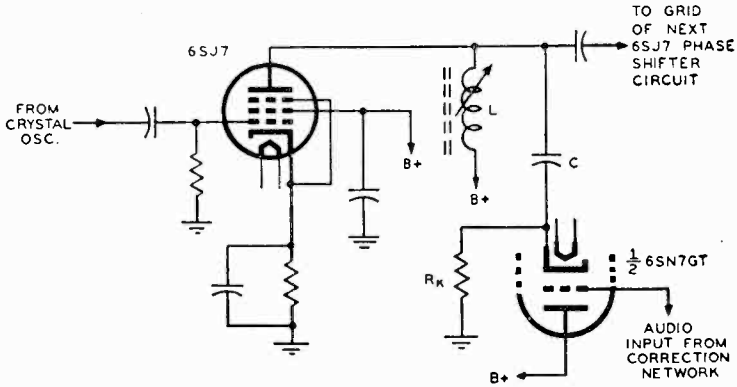

After Raytheon Mfg. Co.

Fig. 4-34. A single-stage phase modulator, where the 6SJ7 is the r-f amplifier and the constant-impedance network is L in parallel with the series combination of C and one section of the 6SN7GT, the resistance tube.

stages are exactly the same in component parts and applied voltages, there will be a perfectly operative sixfold phase shift modulator system with any appreciable a.m. prevented by the constant impedance network.

THE WESTINGHOUSE DIRECT F-M TRANSMITTER

In its f-m transmitter, the Westinghouse Electric Corporation employs a system of direct f.m. different from any of the previous systems. Since the method is one of direct f.m., a variable frequency oscillator (vfo) is used, and consequently a system of frequency stabilization is employed. The frequency stabilization is of a completely new style compared with anything already studied. The most important parts of this transmitter are these two units — namely, the modulator and frequency stabilization systems.

The frequency multiplication system does not use as many stages as is usual with indirect f-m transmitters. Two tripler stages are used

to give an over-all frequency multiplication of 9. The oscillator itself is used as one of the triplers, and the other tripler uses the dual tetrode beam power tube type 829B in a push-pull arrangement. Since the multiplication is ninefold, the initial amount of peak frequency deviation at the oscillator-modulator stage, for a 75-kc peak deviation output, is equal to 75/9 or 8.333 kc. Likewise the variable frequency oscillator has to be somewhere in the range of 88/9 or 9.778 mc to 108/9 or 12.0 mc, so that the final output frequency will fall within the complete f-m band of 88 to 108 mc.

The Oscillator-Modulator System

Fig. 4-35 illustrates the oscillator-modulator system of these transmitters. The circuit uses a beam power tetrode type 1614 tube as a Colpitts electron-coupled oscillator. Since this 1614 tube also operates as a tripler, the grid circuit is tuned to 1/9 of the output frequency of the transmitter, and the plate circuit is tuned to 1/3 of the output frequency. L_1 is the plate inductance of the oscillator tripler tube, and at a first glance it may be difficult to see how plate tuning is accomplished. This coil in conjunction with coil L forms an r-f transformer

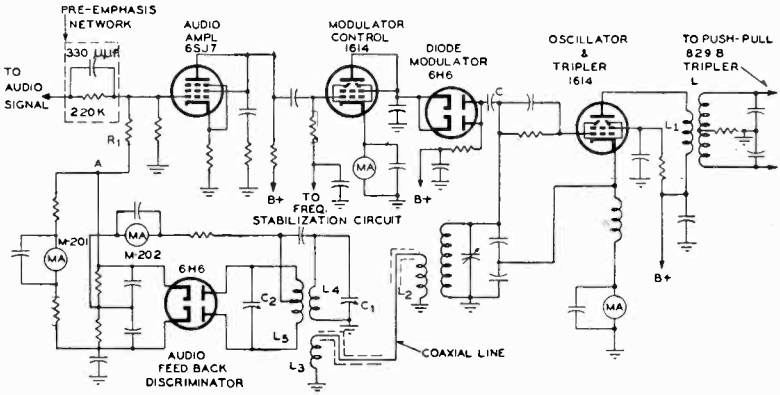

Courtesy Westinghouse Electric Corp.

Fig. 4-35. Oscillator-modulator system of the Westinghouse direct f-m transmitter.

in which both coils are wound on the same coil form. As these coils are very closely coupled (a high coefficient of coupling exists), the mutual inductance is quite high, and consequently the plate circuit of the oscillator is effectively tuned simultaneously with the secondary tuned circuit.

A standard pre-emphasis type network in conjunction with a 6SJ7 class A audio amplifier is used in the audio section. The output from

this amplifier is fed into the modulator control tube type 1614. This varying audio varies the plate current of the tube at an audio rate, and, in turn, the plate current affects the 6H6 diode modulator tube which injects a varying reactive effect across the oscillator tank circuit. This reactive effect is varying at an audio rate and consequently varies the oscillator tuned grid circuit at the same audio rate, thus frequency modulating the carrier frequency of the oscillator.

Let us analyze this modulator circuit a little more thoroughly in order to understand how f.m. of the oscillator results. In Fig. 4-36 the

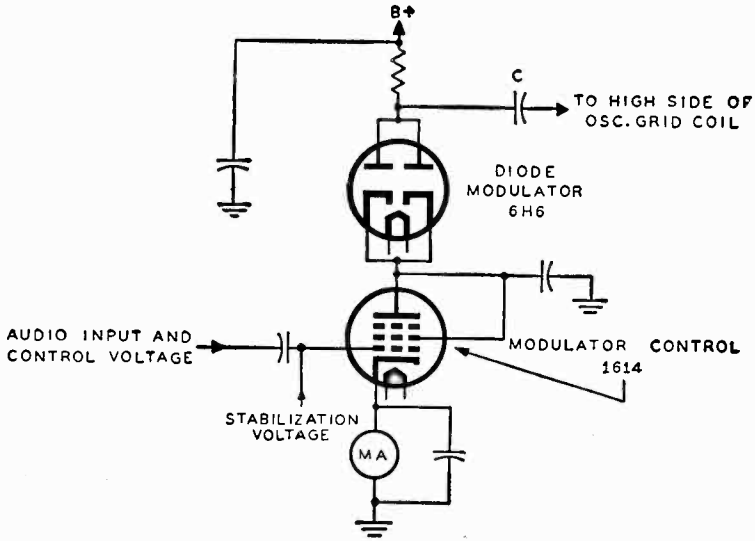

Fig. 4-36. Simplified schematic of the modulator circuit of Fig. 4-35. The plate voltage to the 1614 tube is supplied indirectly through the effective resistance of the 6H6 modulator tube.

modulator circuit, comprising the 1614 modulator control tube and 6H6 diode modulator of the previous circuit, is redrawn for ease of discussion. From this figure (and from that of Fig. 4-35) it will be noticed that the 1614 modulator control tube does not have any B+ voltage supplied *directly* to its plate. The word directly is used intentionally, because, although at first not apparent, supply voltage does exist on the plate of the control tube but in an indirect manner. The plate voltage is supplied to the tube through the *effective resistance* of the 6H6 diode modulator tube.

It is readily seen that B+ voltage exists on the plates of the 6H6 modulator tube (the plates, as well as the cathodes, are connected in parallel) and that the only path available to complete the d-c path

to ground is through the cathode circuit of the 1614 control tube to ground. This means that the voltage that exists between the plates of the diode and ground is divided into two parts. One part exists between the plates and cathodes of the 6H6 tube, and the other part is between plate and ground of the 1614 tube (the voltage drop across the milliammeter is negligible). For example, let us assume that 275 volts exists on the plates of the diode tube and that the resistive effect of this tube is such that a potential drop of 5 volts exists across it. Thus the cathodes of the 6H6 tube are 5 volts *less* positive than the plates and consequently the voltage on the cathodes is equal to 270 volts. Since the 6H6 cathodes and plate of the 1614 tube are directly connected, 270 volts are also said to exist on the plate of this 1614 control tube and these 270 volts can be measured between this plate and ground.

With the understanding of how an effective supply voltage does exist on this 1614 tube, it is readily conceivable that the current flowing through the control tube also has to flow through the 6H6 modulator tube. The instantaneous current flowing through the diode, therefore, depends upon the current flowing through the 1614 control tube. Before we discuss the action of the diode modulator tube in detail, let us delve a little deeper into the functioning of the control tube.

This type 1614 control tube has the screen tied to its plate so that it functions as a triode. The voltages applied to the tube are such that the tube operates as a class A audio frequency amplifier. Applied to the grid of this tube are two signals, one a variable audio signal (the intelligence to be transmitted) and the other the control voltage from the frequency stabilization system. Since this control tube is operated as a class A amplifier the current flowing through it (due to the audio and stabilization signals) and hence through the 6H6 modulator tube is always proportional to the instantaneous value of grid voltage. The modulator tube in conjunction with capacitor C presents a net reactive effect to the oscillator grid circuit, and, consequently, the audio signal must vary this reactance to frequency modulate the oscillator.

The automatic frequency control voltage from the frequency stabilization unit determines the static operating conditions of the control tube and thus establishes the static reactance characteristics of the modulator. In other words, without any audio applied to the control tube only the stabilization voltage exists on the tube, and a fixed or static reactive effect, due to this voltage, is presented by the diode modulator to the oscillator grid tank circuit. The value of this reactive effect causes the oscillator to provide the proper frequency when no modulation (that is, no audio signal) is present. It also establishes the point from which the reactance will vary above and below this fixed

or static value and thus frequency modulate the oscillator above and below the established frequency when no modulation is present. With the operation of the 1614 as modulator control tube known, let us now analyze how the 6H6 modulator tube functions in conjunction with the control tube.

The diode modulator tube in conjunction with the circuit capacitances presents an impedance to the circuit; that is, it contributes both a resistive effect and a reactive effect. This is understood from the facts that a d-c voltage drop exists across the diode which contributes to the resistive part and that an interelectrode capacitance exists between the plates and cathodes that contribute, in conjunction with other capacitances in the circuit, to the reactive part of the impedance. The instantaneous values of current flowing through the diode consequently have both a resistive component and a reactive component. When the value of the instantaneous current flowing through the tube is changed by the audio modulating signal on the control tube, the resistive and reactive parts of this current change accordingly. Since the reactance of the circuit is on the capacitive side, the instantaneous current flowing through the diode is always leading the r-f voltage existing across the circuit. The vector diagram and simplified schematic of Fig. 4-37 will make this somewhat clearer.

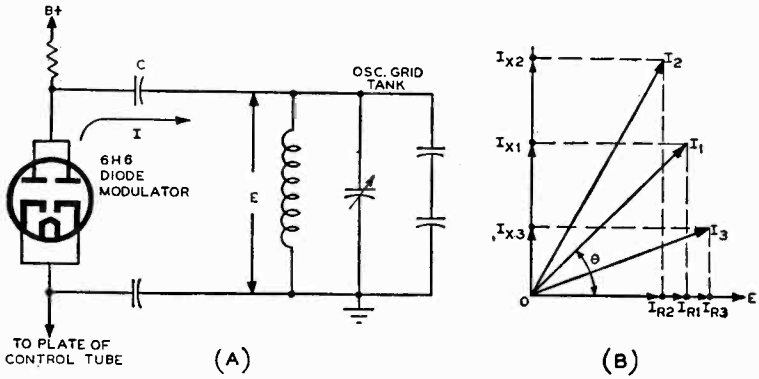

Fig. 4-37. The simplified schematic of the 6H6 diode modulator of the Westinghouse f-m transmitter (A) and the vector representation (B) of the instantaneous currents flowing in the circuit (A). This shows that the resistive current change is small compared with the reactive current change.

With no modulating signal applied to the control tube, the current I flowing through the circuit leads the voltage E across the circuit by some phase angle. This current is designated as I_1, and in the vector diagram of Fig. 4-37 (B) it is seen to lead the voltage E by some phase angle called θ. By dropping perpendiculars from the terminal point of

I_1 to its respective vertical and horizontal axes, the reactive and resistive parts of the current can be seen. Thus the resistive current becomes I_{R1} and the reactive current I_{X1}. At once it is apparent that the resistive current I_{R1} and voltage E are in phase with each other and that the reactive current I_{X1} is in quadrature (leading by 90°) with the voltage E. These resistive and reactive components of current produce across the oscillator tuned circuit a fixed resistance and a fixed capacitance which are determined by the effective values of I_{R1} and I_{X1}. If this reactive current can be made to vary in accordance with the audio signal, the effective capacitance that is injected across the oscillator grid tank circuit also will vary and, consequently, f.m. of the oscillator signal will be obtained.

When an audio modulating signal is applied to the grid of the modulator control tube, the value of the current flowing through this control tube, and hence through the 6H6 diode modulator, will change at each instant. Thus current I flowing in the circuit of Fig. 4-37 will be a varying current, changing in accordance with the applied audio and, therefore, is considered as an instantaneous current. On the positive half cycle of audio, the grid of the control tube becomes less negative, and the instantaneous current flowing through the circuit increases in magnitude and also changes in phase with respect to the voltage E existing across the circuit. This current is designated as I_2 on the vector diagram. Dropping perpendiculars from this current makes the resistive and reactive parts clearly evident, the new reactive current being I_{X2} and the resistive current I_{R2}.

On the negative half cycle of audio, the grid of the control tube becomes more negative, and the instantaneous current flowing through the circuit decreases in magnitude and also changes in phase with respect to the voltage E existing across the oscillator grid tank circuit. This current at a certain instant on the negative half cycle of audio is designated as I_3 on the vector diagram of Fig. 4-37 (B). The resistive and reactive components of current are readily determined and designated I_{R3} and I_{X3}, respectively. Examination of the over-all vector diagram reveals that, when the audio signal increases the instantaneous current, the reactive current increases and the resistive current decreases, and, when the instantaneous current decreases, the reactive current decreases and resistive current increases. Also, the total change of the reactive current is very much greater than that of the resistive current.

To understand how the oscillator is frequency modulated let us examine the simplified circuits of Fig. 4-38. In part (A) resistor R represents the variable resistance of the diode and capacitor C_T represents the total capacitances in the circuit that are effectively in series with the diode resistance. This series RC_T arrangement is in parallel with the oscillator grid tank. The instantaneous current flowing

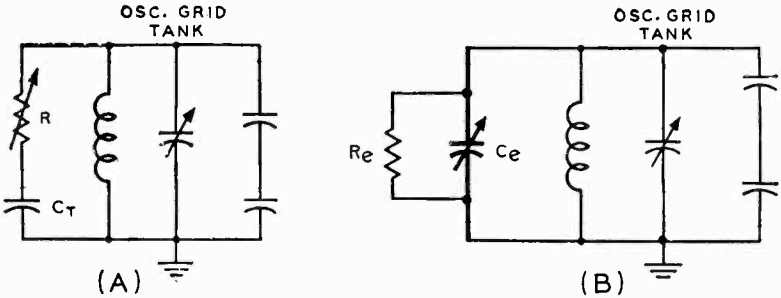

Fig. 4-38. Simplified schematic (A) of the oscillator-modulator circuit of Fig. 4-37 (A) and the equivalent circuit is shown in (B).

through this network (I in Fig. 4-37) contains both a resistive and reactive component. Due to the varying audio modulating signal, the resistance of the diode changes, producing a change in the instantaneous current I; therefore, the resistive and reactive parts of the current also change. Looking back from the oscillator tank toward the diode modulator circuit, a parallel resistive and capacitive component can be seen due to the resistive and reactive parts of the current I. These components are shown in Fig. 4-38 (B) where R_e is the equivalent parallel resistance and C_e the equivalent parallel capacitance. Only C_e is illustrated as a variable and not R_e because the vector diagram of Fig. 4-37 (B) showed that the resistive current change is negligible compared to the capacitive current change. Circuit (B) of Fig. 4-38 is equivalent to circuit (A) despite the interchange of the variability from R of circuit (A) to C_e of circuit (B). This can be proven mathematically but it is beyond the scope of this book.

Consequently, when an audio signal is applied to the modulator control tube, there is injected a variable reactance across the oscillator grid tank circuit in accordance with this audio, so that the oscillator signal is frequency modulated. The resistive change, as mentioned, is so small compared with the reactive change that effective resistance change injected along with the reactive change across the oscillator tuned circuit is considered negligible. That is, the voltage drop across the diode modulator tube changes very little during the varying current flow through the tube, which means that a-m effects due to such voltage changes are negligible.

The 6H6 diode was chosen as the modulator because it provides greater freedom from noise than does a conventional reactance tube modulator. Another main reason for its use is the greater ease in establishing its operating range (the range over which it operates in conjunction with the modulation signal) so that a.m. of the oscillator, due to resistive changes is practically eliminated. One of the primary problems of design in any type of reactance modulator is to minimize as much as possible any changes in the resistive voltage drop across

the modulator tube. This voltage drop indirectly appears across the oscillator tank, and if there is a variation or change in this voltage, the change will also appear across the oscillator tank. The effect of this is to cause a.m. of the oscillator output which is definitely undesired. As was pointed out, this a-m effect is avoided to a degree where it is considered negligible by operating the diode modulator at a point where the change in resistive current through the tube is very small in proportion to the change in reactive current.

Meter indication is used to make sure that the modulator will be operated within the range producing the minimum amount of resistive current variation over the audio range required for the maximum amount of modulation. The meter in question appears in the cathode circuit of the 1614 control tube as seen in Figs. 4-35 and 4-36. The current registered by this meter flows through both the control tube and the modulator tube. A static current reading of 6 ma establishes the correct operating point of the diode modulator and will, thus, permit variations in either direction sufficient to produce the necessary frequency deviation for the final output f-m signal.

Audio Feedback Discriminator Network

Another interesting part of the circuit of Fig. 4-35 is the audio feedback discriminator network. From the schematic diagram it can be seen that this network provides an audio feedback circuit from the 6H6 diode modulator to the 6SJ7 audio amplifier. Briefly, this circuit provides an inverse feedback voltage to the grid of the 6SJ7 audio amplifier to improve the linearity of the audio circuits and the frequency response of the transmitter. The circuit involved is a conventional discriminator detector arrangement such as those commonly used in many f-m receivers and in electronic afc systems similar to those discussed in chapter 3.

Input voltage to the system is derived by taking a small amount of signal from the oscillator grid inductance by transformer action and coupling this signal through a coaxial line to the audio feedback discriminator network. The complete coupling line consists of inductances L_2 and L_3 and the coaxial line. The primary and secondary inductances L_4 and L_5 are tuned by capacitors C_1 and C_2 respectively. These two capacitors are screw driver adjustments on the front panel of this transmitter and are used to align the discriminator. To simplify the tuning procedure two milliammeters, M-201 the "discriminator current differential" meter and M-202 the "discriminator current total" meter, are provided. When the primary tank circuit of the discriminator is tuned in resonance with that of the oscillator, maximum current will flow through M-202. When the secondary is likewise tuned to resonance, the current through M-201 will be zero. The basic analysis for this type of discriminator was discussed in the afc

section of chapter 3 and will be further analyzed in chapter 7 in conjunction with the discriminator detector.

When no modulation is present, the potential at point A at the output of the discriminator network of Fig. 4-35 is zero. However, when modulation is present, an a-f voltage will exist at point A due to the variation in the carrier frequency because of the deviation involved. Thus the a-f voltage is varying at the rate of the applied audio and also in magnitude with that of the audio signal. This a-f output voltage appears across the grid of the 6SJ7 audio amplifier as an inverse feedback voltage through coupling resistor R_1 (also called an isolation resistor).

This a-f voltage is called an inverse feedback signal because it is constantly of opposite polarity to the audio input signal. When the positive half of the audio is on the 6SJ7 audio amplifier, the a-f potential at point A is negative; when the audio signal is on its negative side, this a-f feedback voltage is positive.

The Frequency Stabilization System

As we pointed out, the system of frequency stabilization used in these transmitters is completely new compared with those already discussed. However, it has the same purpose as the others — namely, to maintain the center frequency of the modulated oscillator-tripler tube fixed. Basically what this system does is to take some of the f-m signal from the grid circuit of oscillator-tripler and compare it with a reference crystal oscillator. Any difference in the center frequency of the modulated oscillator and the crystal oscillator output will cause an afc voltage to be injected into the grid of the modulator control tube, which in turn will bring the oscillator-tripler back to its center frequency point. The unique thing about this arrangement is that no tuned circuits are used, thereby doing away with the necessity of continuous testing of the system. There are no frequency dividing circuits of any kind, as in other systems, to reduce the modulation effect of the f-m signal.

In a number of stabilization systems the control voltage is based upon the average frequency. For the system used in these transmitters the frequency correction is based upon maintaining the average deviation above the assigned frequency equal to the average deviation below. In other words if the f-m signal is such that the area enclosed for one-half cycle of the signal is equal to the other half cycle as shown in Fig. 4-39, then the modulated oscillator will be on assigned frequency. When the total number of cycles of beat note produced while the modulated oscillator is operating on the low side of its center frequency, (that is, negative deviation) is equal to those cycles on the high side (that is, positive deviation), the transmitter

is operating at its correct point. The beat note that is produced has an instantaneous frequency equal to the instantaneous deviation of the modulated oscillator.

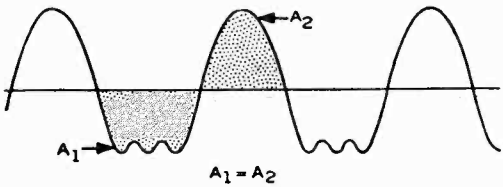

Fig. 4-39. In the stabilization system used in the Westinghouse transmitter, if the areas of the half cycles of the f-m signal, are equal (area A_1 equals area A_2), the modulated oscillator will be on the assigned frequency.

After Westinghouse Electric Corp.

A block diagram circuit arrangement for this frequency stabilization system is illustrated in Fig. 4-40. The actual circuits are not shown in this drawing, because they are somewhat complex in operation. It is beyond the scope of this text to go into the theory of

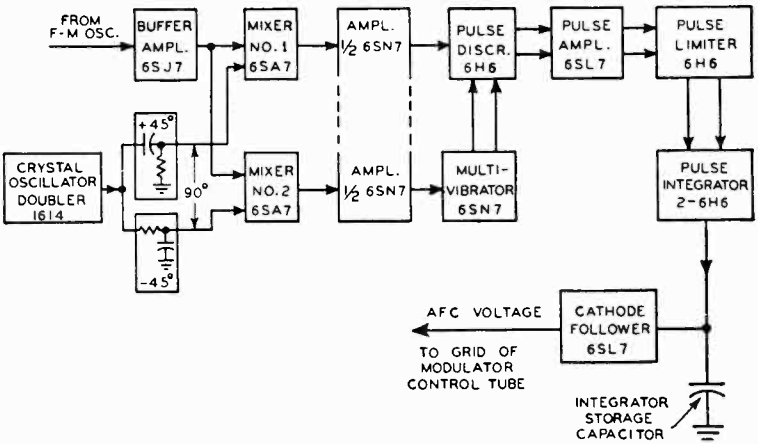

After Westinghouse Electric Corp.

Fig. 4-40. Block diagram of the frequency stabilization system used in the Westinghouse direct f-m transmitter.

operation of such special circuits as those listed within the blocks of Fig. 4-40. In the discussion to follow we will try to make the analysis as simple as possible without deviating from the true function of each individual section of the system. To visualize the operation of this frequency stabilization system, drawings of the wave changes of certain signals as they appear throughout this system will be used. This system has been called a *pulse method* of frequency stabilization; this terminology will become evident as the discussion progresses.

To start with, some of the f-m signal from the oscillator-tripler is tapped off the coaxial line that is used in conjunction with the audio feedback discriminator and applied to the grid of the 6SJ7 buffer am-

plifier, as shown in Fig. 4-40. The output of this buffer amplifier is fed into a parallel arrangement of the number one grids of two 6SA7 pentagrid tubes which act as converters. A 1614 tube is used as an electron coupled crystal oscillator and doubler. The crystal used is equal to 1/18 of the center frequency output from the transmitter. The cathode, control grid, and screen of the 1614 tube function as a crystal triode oscillator. In the plate circuit of the 1614 tube appears a tuned circuit with a resonant frequency equal to twice that of the crystal, or 1/9 of the output frequency of the transmitter. The tube then functions as an electron-coupled oscillator and doubler with an output frequency equal to twice that of the crystal grid circuit. The output signal of this oscillator-doubler circuit is passed through two separate *RC* phase shift networks. At the frequency of the crystal oscillator output, the reactances of the capacitors are equal to the resistances, so that the phase shift in each case is 45°. The individual outputs of these two phase shift networks are fed into the third grids of the 6SA7 pentagrid tubes. Since two separate signals are fed into these two tubes, the latter function as mixers in which the output frequency selected is equal to the *difference* between the two signals. The other frequencies that result from the mixing process are bypassed to ground through suitable capacitors. This is easily accomplished because the difference frequency between these two signals is very small compared with the frequency of either signal.

The *RC* phase shift networks are so arranged that the third grid of the No. 2 mixer tube receives a lagging 45°, and the third grid of the No. 1 mixer tube receives an input signal leading 45°, which is to say that the inputs to the third grids of the individual mixer tubes, although equal in magnitude, differ in phase by 90°. This is an important factor in the functioning of the frequency control system, as it is the action of these mixer tubes which determines the proper operation of the rest of the circuit.

Let us now consider the operation of the mixer tubes with respect to the input voltages. First, we will consider the case when no modulation is applied to the transmitter. Since the output circuit of the crystal oscillator and the grid circuit of the master oscillator are both tuned to 1/9 of the final output frequency, then when the master oscillator is stable, the signal inputs to the first and third grids of both mixer tubes will be the same. There will be no output signal from either mixer, because the difference frequency of the two input signals is zero.

However, when modulation is applied, the input signal to both number one grids of the mixer tubes will be one that is frequency modulated, with the frequency varying on either side of the center frequency component. With the crystal oscillator output frequency

still applied to the third grids of the mixers, these two signals will mix together, and a beat note will be produced which has an instantaneous frequency equal to the instantaneous deviation of the modulated oscillator. If the modulated oscillator is on frequency, the resultant signal will be such that the areas enclosed by the positive and negative half cycle will be equal to each other for every cycle of beat note. However, if the center frequency of the modulated oscillator drifts, the output of the mixer tubes will be such that the area enclosed by the positive and negative half cycles of the resultant signal *will not be equal.* The rest of the control circuit, in conjunction with this difference frequency, helps keep the modulated oscillator on frequency. Each cycle of the output of mixer tube No. 2 is used to generate a pair of pulses which, after being combined with the output of mixer No. 1 and passed through a number of special circuits, produces a varying voltage on the grid of the modulator control tube of the proper potential to bring the modulated oscillator back to its correct operating point. How this is accomplished will now be seen.

Due to *RC* phase shifting networks, the output from the two mixers is such that, when the instantaneous modulated oscillator frequency

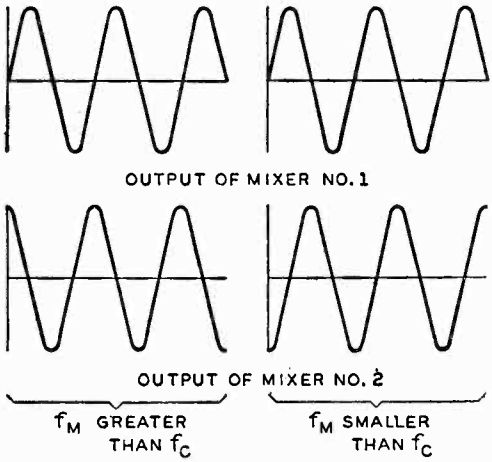

Fig. 4-41. When the instantaneous modulated oscillator frequency f_M is higher than the crystal frequency, f_C, the output of mixer No. 1 lags that of No. 2 by 90°; and when f_M is lower than f_C, the output of mixer No. 1 leads the output of No. 2 by 90°.

After Westinghouse Electric Corp.

is higher than that of the reference crystal circuit, the output of mixer No. 2 leads that of mixer No. 1 by 90°. When the frequency of the modulated oscillator is less than that of the crystal oscillator, the output of mixer No. 2 lags the output of mixer No. 1 by 90°. In other words, at all times the output of both mixers will always be 90° out of phase, due to the phase differences in the outputs of the crystal phase shift networks. Thus, during one complete cycle of modulation, the beat note output of mixer No. 2 will lead mixer No. 1 for half the cycle, and mixer No. 2 will lag mixer No. 1 for the other half cycle.

The phase relationships between the outputs of these two mixers with respect to the frequency of the input signals is illustrated in Fig. 4-41. In this figure f_M means the frequency of the modulated oscillator and f_C means the frequency of the crystal oscillator. The 90° phase relationships are readily noticed upon comparison of the respective curves.

The average beat frequency output from the mixers will not be equal during both halves of the modulation cycle when the center frequency of the modulated oscillator differs from that of the crystal oscillator. It is only upon this inequality in frequencies that a change in voltage will appear at the modulator control tube.

The outputs of these mixers are injected into separate amplifiers, each occupying one triode section of the same 6SN7 duo-triode, as shown in Fig. 4-40. The output from the amplifier of mixer No. 2 is used to trigger a direct-coupled multivibrator which uses a type 6SN7 duo-triode tube. This multivibrator makes use of the sine wave input to develop a square wave output by operating as an electronic switch, in which the multivibrator is designed to turn over very rapidly. The schematic for the multivibrator is illustrated in Fig. 4-42. The square

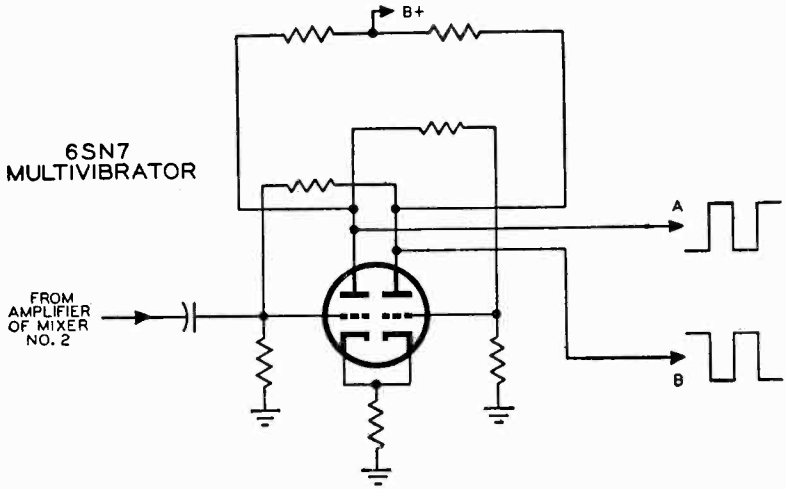

After Westinghouse Electric Corp.

Fig. 4-42. The multivibrator circuit using a 6SN7 duo-triode with square-wave output. These square waves of opposite polarity are necessary for the control voltage.

waves output from the plates of this multivibrator are indicated at points *A* and *B* of this schematic. These square waves are differentiated by resistance-capacitance networks to produce the pulses of opposite polarity necessary for the control voltage. These pulses, shown at points *C* and *D* in Fig. 4-43, are then combined, at the input to a pulse discriminator, with the output from the No. 1 mixer. The

circuit for this arrangement is shown in Fig. 4-43. The *RC* differentiating networks are evident at the input to this pulse discriminator. The pulses after differentiation of the square waves are indicated, at points *C* and *D*.

With the amplifier of mixer No. 1 biased practically to cutoff, a few volts of negative signal on this grid will drive it to cutoff, in which case the plate voltage will increase very rapidly and then level off at the maximum supply voltage. But when the grid is driven in the positive direction, the plate voltage will decrease so rapidly that it will fall almost in a vertical line. On the positive half of the input signal, the grid will draw current, and a squaring effect will be the result in

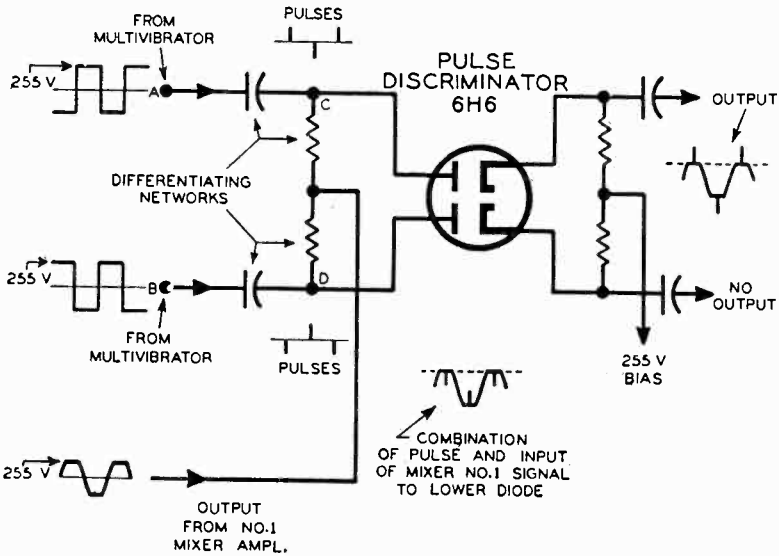

After Westinghouse Electric Corp.

Fig. 4-43. Differentiating network with a 6H6 pulse discriminator tube employed in the frequency stabilization system of the Westinghouse f-m transmitter. Note the waveforms and pulses at the different points in the circuit.

the output signals. The output waveform of the amplifier of mixer No. 1 is shown in Fig. 4-43 being injected into the junction of the two differentiating resistors at the plates of the 6H6 pulse discriminator. Such a waveform is employed because only the positive half cycle of the amplifier output is made use of in the circuits to follow.

Looking at Fig. 4-43 we notice that the cathodes have a positive potential of 255 volts on them. Thus both cathodes of the 6H6 pulse discriminator are biased by +255 volts. Consequently, current will flow through either one of the diodes only when the plates are driven in excess of 255 volts positive. The amplified output of mixer No. 1

can never exceed 255 volts, so this signal alone cannot make the diodes of the pulse discriminator draw current. The same is true of the signals from the multivibrator, since the maximum positive voltage they reach is 255 volts.

However, in Fig. 4-43 it is seen that both of these voltages, namely that of the amplified output of mixer No. 1 and that from the multivibrator, are combined at the plates of the pulse discriminator. Therefore, only when these two voltages are in phase (that is, both in a positive direction at the same time) and can add up to give a greater voltage than 255 volts required for current flow, will either diode of the pulse discriminator draw current.

For the case shown in Fig. 4-43 *only* the upper diode section draws current, because its total available signal is momentarily greater than 255 volts positive. The input to the lower diode is such that the pulses and the output from mixer No. 1 are of opposite polarity and a signal greater than 255 volts, which is required for current flow, is not available. The combination of the out-of-phase signal inputs to the lower diode is illustrated under the pulse discriminator. Consequently, the output signal from the upper diode will be short positive pulses, as seen in the output waveform. (Although pulses riding on a squared sine wave are shown, actually *only* the *pulses* above the dashed line representing the bias level appear in the output.) The over-all function of the pulse discriminator is to produce positive pulses of voltage in the output of one tube when the instantaneous frequency is below that of the crystal oscillator, and positive pulse peaks in the other diode when the instantaneous frequency of the modulated oscillator is above the crystal oscillator frequency. The number of pulses produced depends upon the number of cycles of beat note produced by the mixer tubes. When the modulated oscillator is on frequency, the same number of pulses will be produced by each diode of the pulse discriminator. However, when the modulated oscillator shifts or drifts from its center frequency point, this equality of pulse output will no longer exist. It is this difference in pulse output that helps correct the modulated oscillator.

As shown in Fig. 4-40, the pulse output from the discriminator is sent through a pulse amplifier and a pulse limiter. These sections amplify the pulses and provide for constant equality in their amplitudes. Next, the pulse output from these stages is applied to a pulse integrator network. This pulse integrator system takes these positive pulses of *voltage* and applies them as positive and negative *current* pulses to an integrator storage capacitor (see Fig. 4-40). These latter circuits, the pulse limiter and pulse integrator, produce current pulses as shown in Fig. 4-44 flowing through the storage capacitor. In part (A) the pulses are in the negative direction, indicating that the audio modulating signal is on the positive half cycle; in part (B) the

current pulses are in the positive direction, indicating that the audio modulating signal is on the negative half cycle. Each pulse is very narrow, so that very very small amounts of current due to these pulses flow through the integrator capacitor. This capacitor already has a fixed charge on it, and, when these positive and negative pulses flow through it, very little charging and discharging occurs, only a small variation in charge taking place. This is what happens when the modulated oscillator is practically on frequency.

In conjunction with a cathode follower circuit, this integrator capacitor applies these small changes in its voltage charge to the grid of the

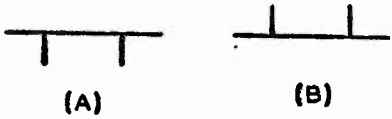

Fig. 4-44. The pulse limiter and pulse integrator circuits produce current pulses flowing through the storage capacitor of Fig. 4-40.

modulator control tube. Because these differences are very small, the control voltage, when the modulated oscillator is stable, has negligible effect. However, when this oscillator drifts off frequency, the number of cycles of beat note, produced by the mixers on either side of the crystal oscillator frequency, is not equal. This means that the pulses on one side are much greater in number than on the other, and the pulses of greater number are sufficient to change the average charge on the storage capacitor until it releases a control voltage that will correct the stability of the modulated oscillator.

Accordingly as the drift is in the higher frequency direction or the lower frequency direction, the storage capacitor, in conjunction with the cathode follower, serves to produce a negative or positive voltage for the modulator control tube. By this action, the injected reactance across the modulated oscillator grid tank circuit is changed to a point where it will change the frequency of the oscillator back to its correct position.

THE REL INDIRECT F-M TRANSMITTERS

The f-m transmitters manufactured by the Radio Engineering Laboratories employ Armstrong's dual-channel method of indirect f.m. There is no need to go into any of the basic modulator and exciter stages, as they are the same as those discussed in connection with the Armstrong system at the beginning of this chapter.

The interesting part of the REL f-m transmitters is the methods of power amplification applied to f-m transmitters operating on different power outputs. The same exciter unit is employed in all REL f-m transmitters, as is the practice of many other manufacturers, but somewhat different methods of increasing power are employed. Most transmitters are so designed that only a power amplifier stage is added

to bring a 250-watt transmitter up to a 1000-watt output. Another power amplifier stage is added to the 1000-watt transmitter to bring the power up to 3 kw, and so on up to 50 kw.

The REL transmitters, as mentioned, employ the Armstrong dual-channel modulator and the same exciter stage. The output of this system is about 30 watts. For the 250-watt transmitter this 30-watt output is used to excite a push-pull pair of type 4-125A tubes for an output of 250 watts. For the 1000-watt transmitter, the same 30-watt exciter is used to drive a pair of 4X-500A push-pull power amplifier tubes for 1000-watts output. In the 3000-watt transmitter essentially the same 250-watt unit is used (the 4-125A tubes now act as an intermediate power amplifier) to drive a pair of WL 478 (push-pull) power amplifiers to obtain an output of 3 kw. The 10-kw transmitter uses the 1000-watt transmitter, and the 4X-500A tubes output of 1000 watts drives a push-pull pair of WL-479-R (final amplifiers) tubes for an output of 10 kw.

THE COLLINS PHASITRON TRANSMITTER

The series of f-m transmitters manufactured by the Collins Radio Company employ indirect f.m. by the use of the Phasitron modulator tube 2H21. The circuit analysis of the exciter unit in conjunction with the multiplier stages is very similar to that of the General Electric f-m

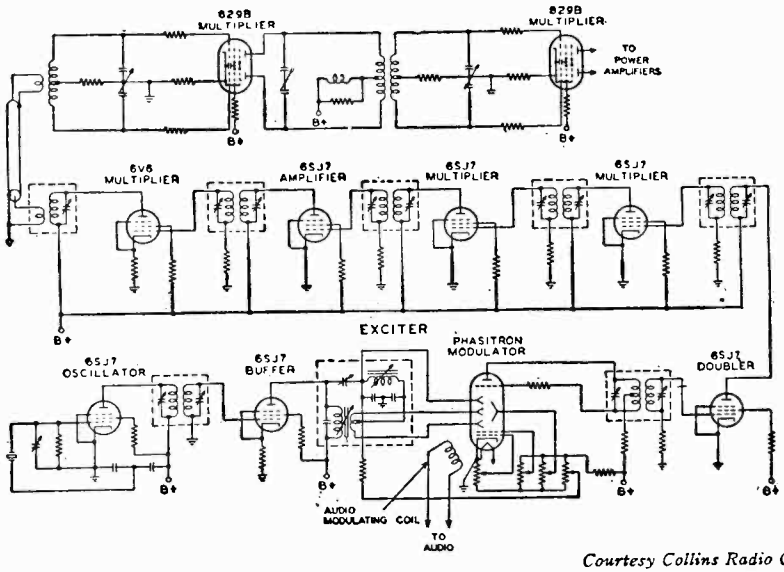

Courtesy Collins Radio Co.

Fig. 4-45. Schematic diagram of the Collins indirect f-m transmitter using the Phasitron tube.

transmitters which were previously discussed. A schematic diagram of the exciter and frequency multiplier system of the Collins f-m transmitters 731A to 736A inclusive is illustrated in Fig. 4-45.

A distortion run taken on the model 733A 3000-watt f-m transmitter for all audio frequencies showed that for audio frequencies between 50 and 15,000 cycles per second, the percentage distortion was one percent or less for 100, 50, and 25 percent modulation. The

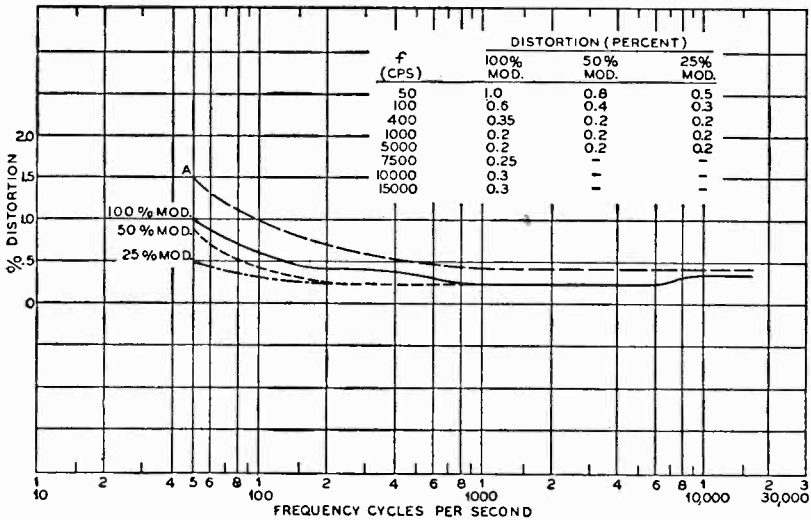

Courtesy Collins Radio Co.

Fig. 4-46. Percentage distortion of the Collins f-m transmitter plotted against audio frequencies is one percent or less for 25%, 50%, and 100% modulation.

audio frequency versus distortion curves for these three different percentages of modulation are shown in Fig. 4-46. These curves were taken under the conditions of pre-emphasis in the transmitter and de-emphasis in the measuring equipment, and the measurements were made in accordance with FCC requirements and in f-m channel 250.

Curve *A* in Fig. 4-46 represents the maximum distortion expected with the tubes used in these transmitters. The limit of distortion for the Phasitron 2H21 tube is 1.3 percent at 50 cycles, and the three experimental curves show that the percentage distortion is below the limit of distortion allowable with these tubes.

PRE-EMPHASIS AND DE-EMPHASIS

In the audio input to a transmitter the amplitudes of the higher audio frequencies are relatively low as compared with the rest of the audio-frequency spectrum. This is due to the natural distribution of

sound in radio program material, *not* to any characteristic of a transmitter. As the programs pass through the transmitter to the receiver and then through the receiver, noise is unavoidably added to the desired audio signal. This noise is predominantly high-frequency audio, and this condition tends to produce a low signal-to-noise ratio at the high audio frequencies because the signal is relatively weak and the noise relatively strong. In a communications system, such as commercial f-m broadcasting, where the audible spectrum up to 15,000 cycles is utilized, this low signal-to-noise ratio at the high audio frequencies is most undesirable. However, it is possible to overcome this condition to a large extent by the use of *pre-emphasis.*

Pre-emphasis means increasing the relative strength of the high-frequency components of the audio signal before it is passed into the modulator. In this way the unfavorable relationship between the high-frequency program material and the high-frequency noise is changed, because while the former is increased, the latter remains the same. Thus, the high-frequency audio signal-to-noise ratio is increased. However, at the same time that pre-emphasis is beneficial in improving the signal-to-noise ratio, it introduces a defect in that it upsets the natural balance between the high- and low-frequency tones in the program material.

This defect is compensated for at the receiver by means of a *de-emphasis* circuit at the input to the audio amplifier. The de-emphasis circuit *reduces* the high-frequency audio exactly as the pre-emphasis *increases* it. However, it operates on *both* the high-frequency program material *and* the high-frequency noise. Thus, it does not change the *improved* high-frequency audio signal-to-noise ratio, which is obtained by means of pre-emphasis, while it does re-establish the tonal balance of the program material, which is lost in pre-emphasis.

The pre-emphasis characteristic curve as set down by the FCC is shown in Fig. 4-47. The solid curve ideally is supposed to represent the characteristic of the pre-emphasis network used in f-m broadcast transmitters. The stipulation is that audio frequencies from 50 to 500 cycles are to be flat at a no gain basis and that from 500 to 15,000 cycles the gain should increase with frequency. The increase is such that at 1000 cycles the gain is almost +1 db, at 5000 cycles the gain is approximately 8 db, at 10,000 cycles the gain is 13.5 db, and at 15,000 cycles the gain is about 17 db. All this is evident from the solid curve of Fig. 4-47 which shows how the gain at the high audio frequencies increases in order to maintain a high signal-to-noise ratio.

When an f-m signal is transmitted, it bears this pre-emphasis characteristic of the audio frequencies. This might lead to the conclusion that, since the high audios are increased to such an extent, there is the possibility of overmodulation. However, since the high audio frequency components of the actual audio signal before it enters the

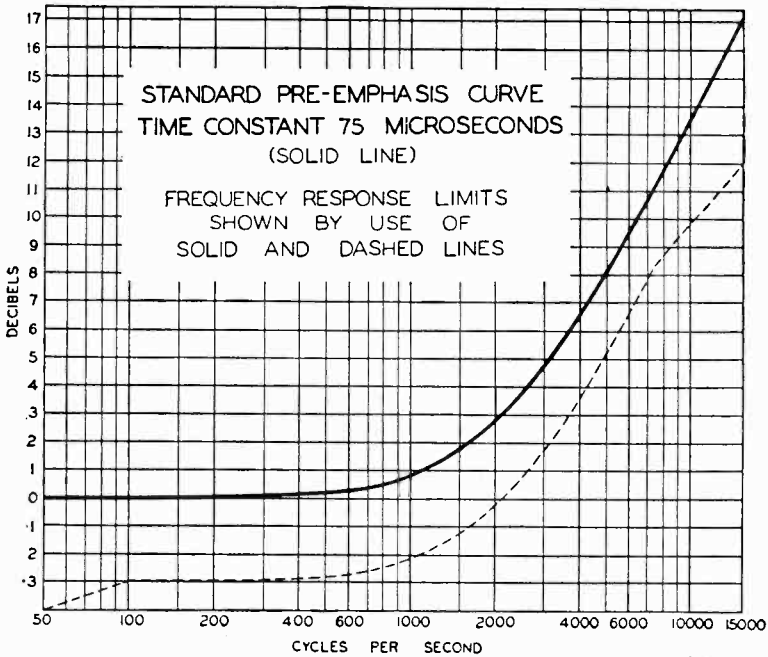

Courtesy FCC

Fig. 4-47. Pre-emphasis characteristic curve established by the FCC. The solid curve shows how the gain at the high audio frequencies increases in order that a high signal-to-noise ratio be maintained.

pre-emphasis network have a much smaller amplitude than the low audio frequencies, there is very little chance of overmodulating the f-m transmitter. It should be remembered that in f.m. 100 percent modulation is equivalent to a peak deviation frequency of the carrier equal to 75 kc. Thus, by overmodulating we mean that the amplitude of the high audio frequency may make the final peak deviation of the carrier greater than 75 kc.

The primary reason for this pre-emphasis network is to make sure that the high-frequency components of the transmitted intelligence are not blocked out by the inherent noise characteristics at these frequencies. When this f-m signal is picked up by the receiver it will have this same pre-emphasis characteristic in the intelligence it bears.

The *de-emphasis* network, which makes sure that the audio frequencies are returned to their original relative level before audio amplification in the receiver, is usually inserted between the detector and audio amplifier. This de-emphasis network has a frequency characteristic just the opposite to that of the pre-emphasis network. In other words its high-frequency response *decreases* in the same way it *increases* in the pre-emphasis network. In this manner, the high fre-

quencies are brought down to their original relationship to the low frequencies. In other words the characteristic curve of the de-emphasis network should be as closely as possible a mirror image of the pre-emphasis characteristic curve.

The FCC has set a standard of a 75-microsecond *time constant* for the pre-emphasis network in the transmitter. (Formerly it was 100 microseconds.) Consequently, the de-emphasis network in the receiver also should have a time constant equal to 75 microseconds if it is to be the mirror image of the pre-emphasis curve.

The FCC has established a specific time constant (75 microseconds) as good engineering practice because the most satisfactory frequency response characteristic will be obtained by that time constant. To understand what determines the time constant let us examine some typical pre-emphasis and de-emphasis networks. Two pre-emphasis networks are illustrated in Fig. 4-48. In both cases as the audio frequencies increase, the voltage to the grids of the tubes also increases. For instance, in Fig. 4-48 (A) the total impedance to the audio volt-

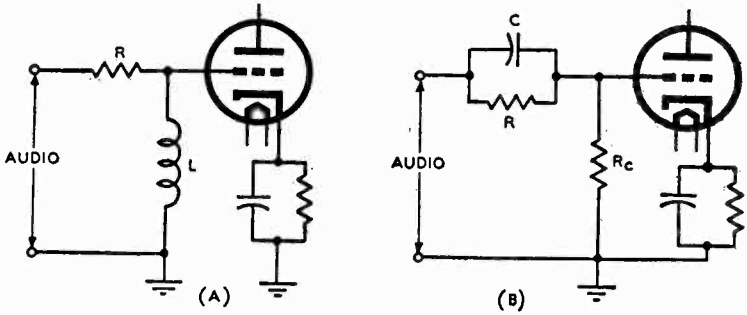

Fig. 4-48. In these two pre-emphasis networks as the audio frequencies increase the voltage to the grids of the tubes also increases.

age is given by the series combination of R and L. As the frequency increases, the inductive reactance also increases. This means that a relatively greater voltage drop will exist across the inductance at the higher frequencies than at the lower. Consequently, the voltage to the grid of the tube increases with increase in frequency. In Fig. 4-48 (B) the pre-emphasis network consisting of C and R in parallel has the same effect. The impedance offered to the audio voltage is effectively that of the parallel combination of R and C only, because the resistance of the grid resistor R_C is small in comparison with either R or the reactance of C at the audio frequencies. As the audio frequency is increased the capacitive reactance of C decreases, allowing a ready path for the higher audio frequency currents as compared with the resistance of R. This means that the signal current increases with in-

crease in audio frequency which results in a greater voltage drop across the grid resistor R_C at the higher frequencies.

A typical de-emphasis network is shown in Fig. 4-49 and it functions in a reverse manner to the pre-emphasis networks. The effective impedance offered to the audio voltage is the series combination of C and R. As the frequency of the audio signal increases, the reactance of the capacitor C decreases, or, as the frequency increases

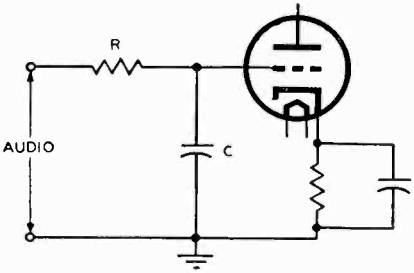

Fig. 4-49. A typical de-emphasis network as used in f-m receivers. It functions in a reverse manner to the pre-emphasis network, such as is shown in Fig. 4-48.

the reactive voltage drop decreases. The audio voltage to the grid of the tube, therefore, decreases with increase in frequency, and hence the reverse of the pre-emphasis circuit is obtained.

In order to make sure that the pre-emphasis and de-emphasis effects follow each other with respect to the increase and decrease of the relative amplitude of the high audio frequencies, the time constants of the two circuits, as mentioned, should be equal to each other. To calculate the time constant for the networks shown in Figs. 4-48 and 4-49 is quite a simple procedure. In the resistance-capacitance networks the value of the time constant is given by $R \times C$, where R is in *ohms* and C in *microfarads*, and the value of the time constant will be in *microseconds*. Thus, for a resistance of 75,000 ohms and a capacitance of 0.001 μf the time constant will be 75,000 $\times$ 0.001 or 75 microseconds. In the resistance-inductance network the time constant in microseconds is given by L/R, where L is in *henrys* and R in megohms. Thus for an inductance equal to 7.5 henrys and a resistance equal to 0.1 megohm (100,000 ohms) the time constant will be 7.5/0.1 or 75 microseconds.

NARROW-BAND F.M.

Up to this point this discussion of f-m transmitters has been confined to those used for f-m broadcasting. The peak frequency deviation as defined by the FCC for 100 percent modulation on the broadcasting band is 75 kc. The deviation frequency is a means of establishing the bandwidth of an f-m station. In all the brodcasting transmitters discussed the type of f.m. referred to is *wide-band f.m.* That is, with the peak-to-peak deviation of 2 $\times$ 75 kc or 150 kc plus

the 25-kc guard bands on either side of this deviation, f-m broadcasting stations have an assigned band 200 kc wide. Whether the 150-kc peak-to-peak deviation is referred to as the bandwidth or whether 200 kc is called the bandwidth is of little consequence, because in either instance the system is referred to as wide-band f.m.

In the f-m transmitters used by the police, amateurs, the Army, the Navy, and the Air Force, the amount of frequency deviation of the final transmitted signal is confined to much smaller values than that used for f-m broadcasting. The type of transmission used by f-m transmitters operating on small frequency deviations is known as narrow-band f.m. The FCC has not established any ruling as to the amount of deviation to be employed for narrow-band f.m. as they have done for wide-band f.m. However, the frequency ranges allocated by the FCC and the f-m receivers in use on those frequencies automatically put somewhat of a restriction on the amount of frequency deviation of the transmitted signal. Thus, although there is no legal limit to the amount of frequency deviation that can be used by narrow-band f-m transmitters, a practical limitation must be taken into account. Theoretically, the amount of frequency deviation used can be as small or as great as desired, but the actual amount used is determined by a number of factors, such as the audio response required, the allowable percentage distortion, and limits as to the size and construction of the transmitter and receiver. In practice, f-m bandwidths as low as 3 kc or as high as 30 kc have been used. In the former case the peak frequency deviation is 1.5 kc and in the latter it is 15 kc. Although no definite dividing line has been set, transmitters with a peak frequency deviation of more than 15 or 20 kc are generally considered medium-band, rather than narrow-band f-m transmitters. We are considering only narrow-band f.m. at the moment.

The references to these amounts of frequency deviation are for 100 percent modulation. That is, the 75-kc peak deviation for 100 percent modulation as set up by the FCC for broadcast f-m transmitters means that 75 kc is the *maximum* allowable peak deviation, but deviations below this are permissible. In narrow-band f-m transmitters the stipulated amount of bandwidth or frequency deviation is set up by the transmitter designer or builder himself as his maximum amount of frequency deviation, and he calls this 100 percent modulation for his transmitter. This is completely different from a-m transmitters as was brought out in chapter 2.

Frequency allocations for the use of f.m. on police bands, amateur bands, and the like, are forever changing. The FCC is constantly issuing orders with often as little as one month between them. Consequently, those frequencies that are listed in Table 4 page 182 for amateur f-m transmission are the latest frequency ranges as set up by the FCC. It may be that as soon as this book is published the frequency

allocations will change. The reader is advised to keep in contact with the releases or changes of frequency allocations by the FCC before he attempts to base any design or construction work on these frequencies.

The basic circuits used in most of these narrow-band f-m transmitters are similar to those already discussed. Both direct f.m., employing reactance tubes of one sort or another, and indirect f.m., employing crystal controlled phase shift modulators, are quite common in narrow-band f-m transmitters. The types of narrow-band f-m transmitters vary. Some are even so simple that they rely primarily on a reactance tube modulator circuit with the necessary amount of frequency multiplication, and no type of center-frequency control whatsoever, to obtain the final f-m wave. Others are intricate enough to be almost equivalent to the operation of an f-m broadcasting station, wherein a complicated phase-shift modulator is employed (indirect f.m.) or, perhaps, a new type of center-frequency control system for direct f-m transmitters. However, so far as the production of the f-m signal is concerned, the circuit analysis is practically the same as that discussed in previous chapters. In order to see this we will study some of the narrow-band f-m transmitters now in use.

An Indirect Narrow-Band F-M Transmitter

Many of the narrow-band f-m sets used by the police and taxicab companies as mobile equipment and also the sets employed by the Armed Forces utilize direct f-m and indirect f-m (p-m) circuits similarly to sets already discussed. The Link Radio Corporation of New York has manufactured a number of different types of mobile and fixed-station f-m transmitters for the police and Army and Navy. In many of these transmitters indirect f.m. is employed, wherein an initial p-m signal is made equivalent to an f-m signal by the use of an audio frequency correction network. In most of the Link f-m transmitters in use today, a different type of modulator circuit from those previously discussed is employed. The modulation process is one of indirect f.m., where a shift in phase is the basis producing a modulated signal. By the use of an audio frequency correction network, the p-m signal is made equivalent to an f-m signal. The important thing about this system is that, for the audio frequencies involved, quite a large initial phase deviation can be obtained, and consequently the use of a small amount of frequency multiplication is needed. In Fig. 4-50 appears a typical schematic diagram of the phase modulator circuit. This circuit is used in the UFM-Ed.-7A Link transmitters as well as other sets. The complete oscillator-modulator circuit uses only a single tube — the duo-triode 7F7 loctal tube. One half of the 7F7 is used as a crystal oscillator, and the other half is used as a phase modulator. The crystal oscillator uses the triode sec-

tion connecting to pins 5, 6, and 7 of the 7F7 tube and is of the resistance-capacitance coupled type commonly known as the Pierce crystal oscillator. The functioning of this modulator is based upon the variation of the transconductance or g_m of the tube with the ampli-

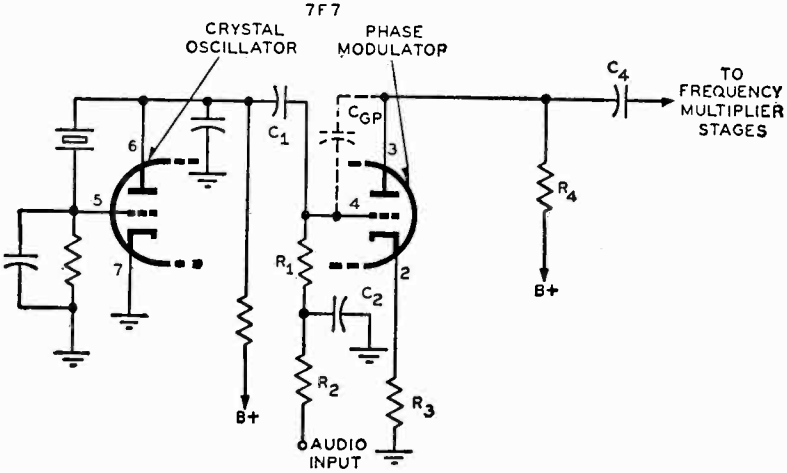

After Link Radio Corp.

Fig. 4-50. The oscillator-modulator stage in which a 7F7 loctal tube is used, that is incorporated in the Link UFM-Ed.7A f-m transmitter. One-half the 7F7 is used as a crystal oscillator and the other half as a phase modulator.

tude of the audio input. To understand fully the functioning of this modulator system we will analyze it in conjunction with a vector diagram. The vector diagrams for this circuit are in Fig. 4-51. With the proper supply voltages on both triode sections of the 7F7 tube, and without any audio applied to the modulator, the system functions as follows:

The oscillator injects an r-f voltage into the grid circuit of the modulator, pin 4, through the coupling capacitor C_1. From this grid circuit, the r-f energy from the oscillator section is split up in two paths. Part of this r-f signal finds its way to the plate of the modulator through the grid to plate interelectrode capacitance C_{GP}, and part across the grid impedance network of the modulator tube. This latter voltage is amplified by the tube and finds its way to the plate of the modulated tube in the form of an amplified r-f signal. The votage appearing on the plate of the modulator tube by amplification is referred to as the voltage due to the g_m of the tube. Owing to the inherent nature of an amplifying vacuum tube, the amplified voltage appearing on the plate of the tube is 180° out of phase with

that appearing on the grid of the same tube. Under ideal conditions the r-f voltage fed through C_{GP} from the grid to the plate of the modulator, would be 180° out of phase with the voltage existing there due to the amplification of the tube. But the value of the interelectrode capacitance is small, and a small phase shift occurs in the r-f voltage passing through C_{GP}. Therefore, the two separate voltages appearing at the plate of the modulator tube, effectively across the plate load resistor, R_4, are not exactly 180° out of phase. This is best indicated by the vector diagram of Fig. 4-51 (A) where voltage vector E_G is that due to the transconductance of the tube and voltage vector E_C is that due to the grid to plate interelectrode capacitance of the tube. Since these two voltages exist at the same point, they effectively combine to give a resultant voltage. This is shown by the vector addition of E_G and E_C in Fig. 4-51 (A), where vector E_R represents the resultant vector. Due to the amplification of the tube the voltage E_G would ordinarily be much greater than voltage E_C. However, the value of E_G is limited by the degenerative feedback (that is, inverse feedback) that occurs in the modulator tube. This degenerative feedback is due to the cathode resistor R_3 being unbypassed and, therefore, allowing all the amplified r-f current to flow through R_3, *effectively* causing a smaller r-f voltage to appear across the grid circuit of the modulator tube. The components are so chosen that the magnitudes of voltages E_C and E_G are approximately equal. This is indicated by the magnitudes of the voltage vectors E_C and E_G of Fig. 4-51 (A) being equal.

From this vector diagram, it is seen that, without any audio applied to the modulator tube, the phase of the resultant voltage, E_R in Fig. 4-51 (A), appearing across the plate load of the modulator tube will have a phase θ_1. If either vector E_C or vector E_G is changed in magnitude, the resultant vector E_R will shift in phase, and by this method the resultant output signal of the system will be phase-modulated. This is what happens when an audio signal is applied to the grid of the modulator tube through resistors R_1 and R_2 as seen in Fig. 4-50. The audio voltage varies the instantaneous bias on the modulator grid which, in turn, varies the transconductance of the tube in accordance with the varying amplitude of the audio signal at a rate determined by the audio frequency. This change in g_m varies the voltage E_G on the plate of the modulator. When the audio signal is on the negative half cycle, the grid will have a more negative bias, and the value of E_G decreases in accordance with change in bias. This is indicated in Fig. 4-51 (B) where vector E_G is seen to be smaller than the previous vector E_G in Fig. 4-51 (A). The phase relationship between E_C and E_G does not change. Only the magnitude of E_G changes. In turn, resultant vector E_R due to the vector addition of E_C and E_G also changes. The phase angle is increased in the positive direction, and the new

phase angle is designated as θ_2 (where θ_2 is greater than θ_1) in Fig. 4-51 (B).

When the audio signal is on its positive half cycle, the grid bias will become less negative, and consequently the value of E_G on the plate of the tube increases in accordance with the change in bias. This increase in E_G is illustrated in the vector diagram of Fig. 4-51 (C). The

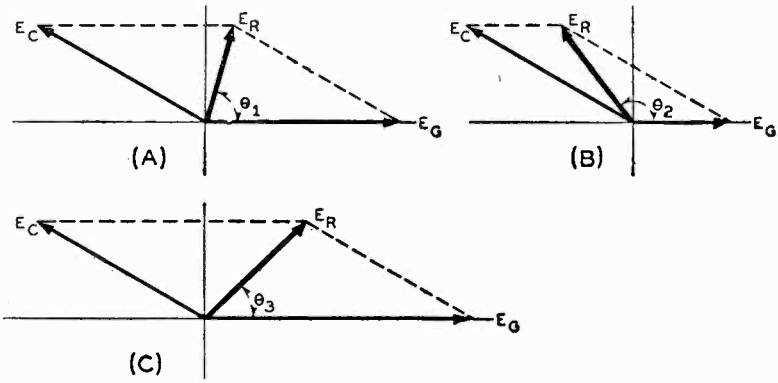

After Link Radio Corp.

Fig. 4-51. Vector diagrams of the voltage relationships in the circuit shown in Fig. 4-50.

phase relationship between E_C and E_G still remains the same, but the resultant voltage vector E_R, due to the vector addition of E_C and E_G, changes. From Fig. 4-51 (C), this change is seen to cause a decrease in the phase angle of the resultant vector E_R. The new phase angle is designated as θ_3. It will be noted that θ_3 is smaller than θ_1. From these vector diagrams it is readily seen that the resultant voltage across the tuned load of the modulator tube is varied in phase about its steady-state (that is, no audio applied) phase value of θ_1, and, hence, the crystal carrier frequency is phase modulated. The magnitude of the phase change, or phase deviation, is dependent upon the amplitude of the audio modulating signal; and the rate of change of the phase deviation is dependent upon the frequency of the audio signal. Since the audio input is impressed across the modulator grid through an audio correction network, consisting of resistor R_7 and capacitor C_7, the p-m signal is made equivalent to an f-m signal.

The discussion of frequency multipliers operating as class C amplifiers, mentioned that an inherent fundamental action of this type of amplifier is that besides acting as harmonic generators they also act as amplitude limiters. Thus, if any a-m effects happen to be superimposed upon the f-m or the p-m signal before it reaches the frequency multipliers, the multipliers, provided the signals are not too

strong, will be able to eliminate these amplitude variations successfully. This is what happens in this transmitter. Glancing at the vector diagrams of Fig. 4-51, it will be noticed that besides varying phase, the resultant vectors E_R also varies in amplitude. These amplitude variations are in accordance with the audio amplitude, but are eliminated by the limiting action of the frequency multiplier stages which follow. Consequently, the final f-m signal will be virtually free of any amplitude effects.

The amount of frequency multiplication employed in these transmitters is 32 times, and the final peak frequency deviation is equal to 15 kc for 100 percent modulation throughout the audio range. This means that the initial peak phase deviation of the modulator is equivalent to a frequency deviation of 15 kc/32 or approximately 470 cycles per second. This initial equivalent frequency deviation may appear to be quite large for a phase modulator until one considers that an audio frequency range of only 350 to 5000 cycles per second (more than sufficient for speech work) is involved. Recognizing this, the initial amount of peak phase deviation for the smallest audio frequency will not be so great as in indirect f-m broadcast transmitters.

In this instance the initial peak phase deviation P_D for the smallest audio frequency of 350 cycles is equal to the following:

$$P_D = \frac{57.3}{350} \times F_D$$

where F_D equals the peak frequency deviation, in this case equal to 470 cycles per second, and where 57.3 is the number of degrees in one radian. Therefore,

$$P_D = \frac{57.3}{350} \times 470 = 76.9 \text{ degrees}$$

This is still quite a large phase deviation but not so great as at first indicated by the equivalent peak frequency deviation. At 350 cycles the audio frequency response of the transmitter is down 2.5 db as compared with the middle of the audio band. However, at 500 cycles the audio response is down only 1 db, and at this audio frequency, for a final output peak frequency deviation of 15 kc for 100 percent modulation, the initial amount of peak phase deviation of the modulator would have to be

$$P_D = \frac{57.3}{500} \times 470 = 53.8 \text{ degrees}$$

Even at the higher frequency of 500 cycles, this initial amount of phase deviation is quite large compared with that for some f-m broadcasting stations employing indirect f.m., where the smallest audio frequency involved *has to be*, at the most, 50 cycles per second

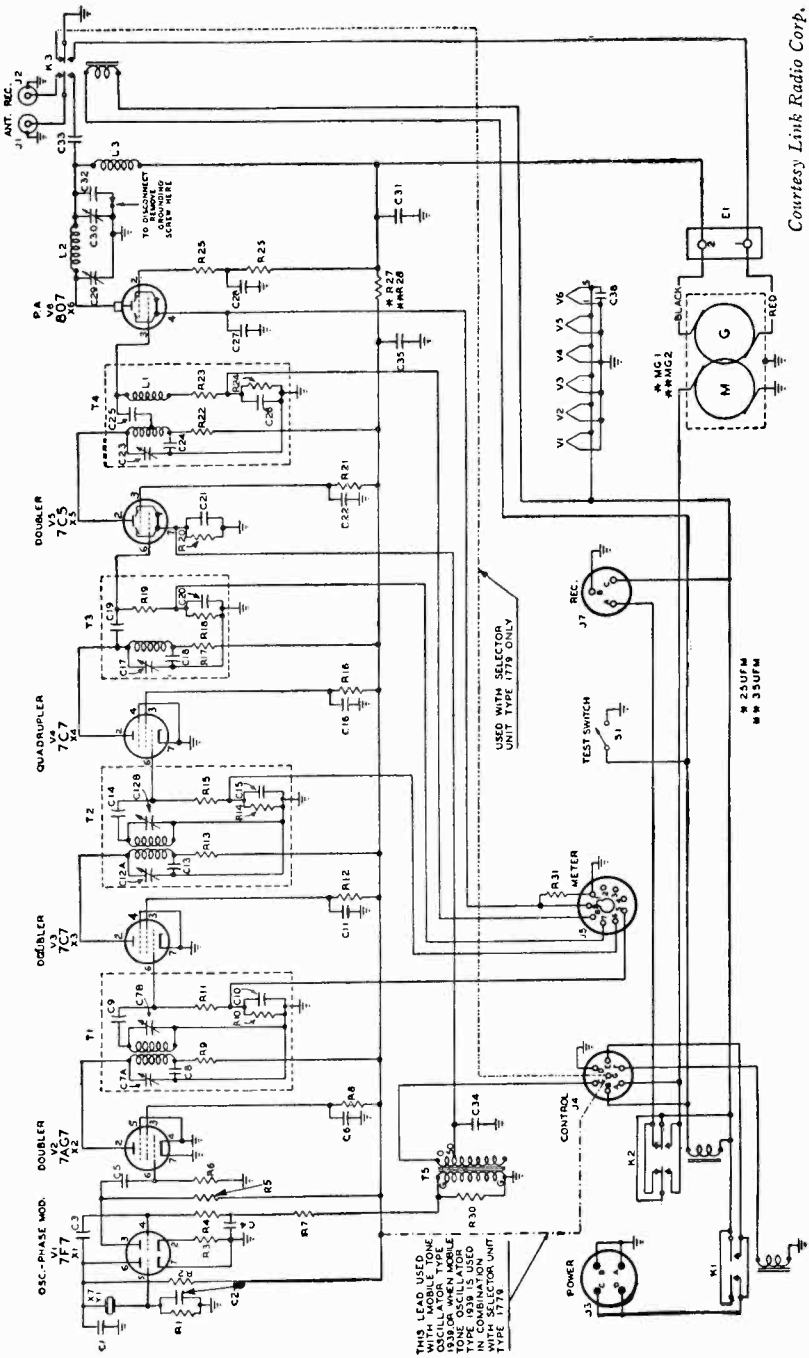

Courtesy Link Radio Corp.

Fig. 4-52. Schematic diagram of the Link 25- or 35-UFM - Ed. 7A f-m Link transmitter.

and where the initial amount of peak phase deviation may be in the vicinity of 25 degrees.

These transmitters can be operated anywhere in the 30-to-44-mc range and, since the frequency multiplication is 32, the crystal used for the oscillator will be anywhere between 30 mc/32, or 937.5 kc, and 44 mc/32, or 1375 kc. A schematic diagram of the 25- or 35-UFM-Ed. 7A f-m Link transmitter is shown in Fig. 4-52.

Amateur F.M.

This part of the narrow-band f-m transmission is probably of great interest to those contemplating rigging up a ham f-m station, or to those hams who have already built a set and are confronted with changing frequency allocations. At the time of this writing not too many companies have amateur f-m transmitters on the market, although a great many are in the process of building them. It is difficult to make any predictions about the types of modulator circuits that will be employed in the ham transmitters being built, but it is believed that the circuits used for the production of the f-m signals will be very similar to those discussed in this book, as are most of the ham f-m transmitters now on the market. The greatest striving toward new developments will be toward different and better types of frequency control circuits for direct f-m transmitters and for better noise, distortion, and audio characteristics in both the direct and indirect f-m transmitters.

In Table 4 is a listing of the frequency assignment in which amateurs are allowed to operate on f.m. This list is not inclusive of f.m. alone. Most other types of emission (except television in most instances) are also included.

TABLE 4. FCC* Frequency Range in Which Amateur F.M. Can Operate

3.85 mc to 3.9 mc	1,215 mc to 1,295 mc
14.2 mc to 14.25 mc	2,300 mc to 2,450 mc
27.160 mc to 27.430 mc	3,300 mc to 3,500 mc
28.5 mc to 29.7 mc	5,650 mc to 5,850 mc
51.0 mc to 54.0 mc	10,000 mc to 10,500 mc
144 mc to 148 mc	21,000 mc to 22,000 mc
235 mc to 240 mc	and
420 mc to 450 mc	All frequencies above 30,000 mc.

*As of October, 1947.

Table 4 is tabulated from a compilation of data received from the FCC, and its last effective date was in October 1947. There is only one limitation in this listing, and that is the peak antenna power on the 420-to-450-mc band shall not exceed 50 watts. All the bands, 420 to 450 mc and higher, can also include television, and the bands, 1,215

to 1,295 mc and higher, can also employ pulse emissions. A quick survey of this table indicates that the range of frequencies in each band increases as the relative frequencies themselves increase. It is believed that many ham transmitters will contain provisions for switching over into different bands, so that operation will not be restricted to only one band.

An Amateur Direct F-M Transmitter

In the model AF-100 of the Supreme Transmitter Corporation of New York both a.m. and f.m. are employed. This transmitter can operate on a-m telephony, f-m telephony, continuous wave telegraphy, and modulated continuous wave telegraphy. It employs a direct f-m system using a 6AC7 single reactance tube modulator in conjunction with a 6J5 variable oscillator. The oscillator-modulator circuit arrangement is shown in Fig. 4-53 in simplified form. This

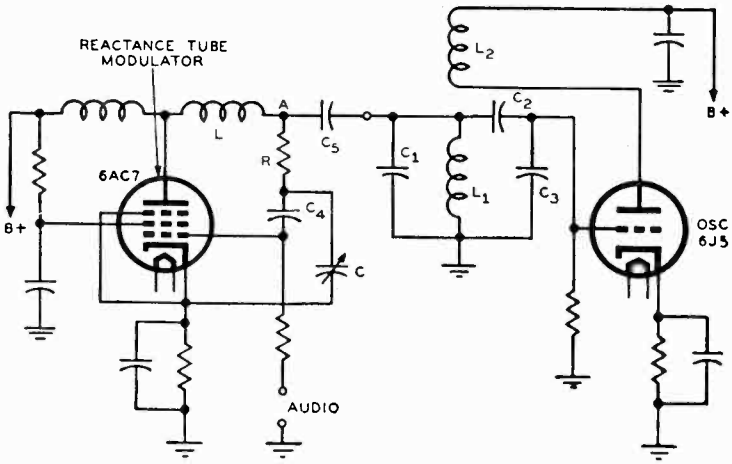

Courtesy Supreme Transmitter Corp.

Fig. 4-53. Simplified schematic diagram of the f-m oscillator and modulator stages of the Supreme AF-100 transmitter.

reactance tube modulator is similar to that shown in Fig. 3-7 (B) in chapter 3, where the capacitance C and the resistance R are the primary determining elements for the amount of injected reactance, which is inductive in this case. Coil L is inserted between the plate of the 6AC7 modulator tube and the resistance R, so that in conjunction with C and R the modulator tube will act as a quadrature tube. In other words, L, C, and R together function as the phase-shifting network in which inductive reactance is injected across the oscillator tank circuit consisting of coil L_1 and capacitors C_1, C_2, and C_3. The

type of oscillator circuit used is an ordinary tuned-grid tickler-coil oscillator in which the tickler coil, L_2, in Fig. 4-53, is in the plate circuit of the 6J5 oscillator tube. The coupling between the two coils L_1 and L_2 is just enough to maintain stable oscillations. Fig. 4-53, shows that both audio voltage and r-f voltage from the oscillator tank are applied to the control grid of the 6AC7 reactance modulator. The r-f voltage to this grid can be varied by the capacitor C. The variable frequency oscillator can be tuned anywhere within the range of 3.4 to 4 mc. The band selector switch is so arranged that the necessary frequency multipliers are inserted in the circuit, so that the output f-m signal will be within the limits allowed by the FCC. The volume level of the audio input to the reactance tube can be controlled, so that frequency deviations from narrow-band to wide-band f.m. are obtainable. This variable deviation allows operation with most types of receivers, regardless of their particular type of circuit. For instance, for a straight f-m receiver working on the amateur bands the tuning is usually broad band, so that a wide frequency deviation is needed. However, one of the main purposes of narrow-band f.m. is to make most ham superheterodyne a-m receivers accept the f-m signal and detect it satisfactorily.

At this point it might be wise to show how an a-m receiver can be put to use in detecting narrow-band f-m signals. To start with, most a-m intermediate frequency transformers have a selectivity characteristic similar to that shown in Fig. 4-54. The peak of the curve is at the frequency of the i-f signal. The shape of the curve is such that points *A* and *B*, where the output voltage for a constant-voltage, variable-frequency input signal is about 0.7 of the maximum amplitude, are the usual design points for the proper reception of a-m signals. These points are called the "half power points" of the i-f curve. An a-m signal of the correct i-f will be passed by the i-f transformer. If a narrow-band f-m signal with a peak-to-peak frequency deviation up to about 4 kc were to be received, by proper manipulation of the tuning control, it could be successfully detected by the a-m receiver. This is explained as follows:

In order to make sure that the narrow-band f-m signal is passed by the i-f transformer, and also to make sure that distortion is a minimum, so that the f-m variations can be changed into a-m variations for detection, the receiver is *slightly* detuned. The amount of detuning is such that the reproduction of audio will be at its best. By slightly detuning the set, the r-f section and the oscillator section both become detuned. The amount of r-f detuning is, however, slight, and the f-m signal voltage still comes through. The oscillator becomes detuned to a point where it will produce an i.f. that is different from the peak frequency of the i-f transformer. If the detuning is such that the peak of the new i-f signal lies on the linear portion of

the transformer characteristic on *either* side of the transformer peak, the f-m signal will be properly detected. For the sake of argument let us say that with detuning the oscillator frequency is decreased by 3 kc. Assuming that the oscillator is tuned above the incoming signal the output i-f signal from the converter system will be equal to 452

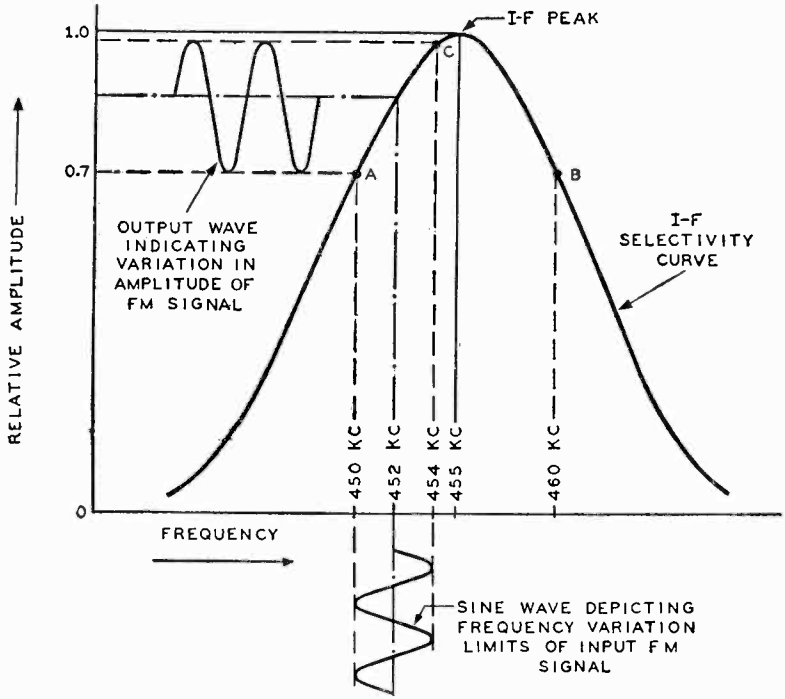

Fig. 4-54. The effect of a typical i-f selectivity curve of an a-m receiver on an f-m signal.

kc instead of 455 kc. Now, with the peak frequency deviation of the narrow-band f-m signal equal to 2 kc, the i-f signal will be changing in frequency from a minimum of 450 kc to a maximum of 454 kc. Since the i-f transformer has a band width of 10 kc, this f-m i-f signal will be accepted by the transformer. The signal at the bottom of the drawing is supposed to represent only the *frequency* variations of the f-m signal between its limits of 450 kc to 454 kc. The upper signal shows how these frequency variations, which are varying at an audio rate, cause amplitude variations due to the so-called *slope* of the r-f curve. Both the input and output signals from the i-f transformer are f-m signals, but the transformer characteristic has incorporated amplitude variations into the output f-m signal, these amplitude variations changing in accordance with the audio intelligence of the f-m signal. Consequently, when the output signal from the i-f

transformer is sent through the a-m detector stage of the receiver, the detector will respond to the amplitude changes (but not to frequency changes), so that these amplitude changes will be detected. Therefore, the audio signal reproduced by the detection of the amplitude variations will contain the intelligence of the f-m signal.

Due to the peak frequency of the operating i-f signal, the part of the i-f curve used in this example that will accept this f-m r-f signal will be that portion between 450 and 454 kc. Looking at Fig. 4-54, this portion of the curve is seen to be quite linear. Therefore, with the f-m signal changing in frequency between these two limits, the i-f transformer will reproduce these frequency variations, which are at an audio rate, with a minimum amount of distortion. In other words, the more linear the portion of the curve between points *A* and *C* becomes, the less distortion will appear in the output.

If the set is *rot detuned* and a narrow-band f-m signal is received, the oscillator will beat with the incoming f-m signal to produce an i-f f-m signal that is exactly on the peak of the i-f transformer. If the peak-to-peak deviation of the f-m signal is equal to 4 kc and if the i-f peak is equal to 455 kc, the i-f f-m signal is swinging from a minimum frequency of 453 kc to a maximum of 457 kc due to the 2-kc peak deviation. This signal will pass through the i-f transformer because it is well within the bandwidth of the f-m signal. However, the way it now stands the f-m signal in passing through the i-f transformer will produce an output that is badly *distorted* because the signal will be working on a very nonlinear portion of the i-f characteristic, namely the portion of the *i-f peak*.

If the f-m signal had a much wider bandwidth, it would be difficult to reproduce this f-m signal on an a-m set without much distortion. The i-f transformers would require special wide-band characteristics greater than 10 kc.

A Direct P-M Exciter

In the narrow band f-m exciter Model VFX 680 of the Sonar Radio Corporation of Brooklyn, N. Y., is employed a type of phase modulator similar to that explained in the discussion of the Link transmitters. The actual circuit as used in this exciter is shown in Fig. 4-55. They use a 6AG7 as a crystal oscillator and one half of a 6SL7 as a phase modulator. The underlying theory of producing the p-m signal is essentially the same as that previously analyzed in conjunction with Figs. 4-50 and 4-51. That is, the oscillator signal appears on the plate of the modulator tube through two sources, one through the grid to plate interelectrode capacitance and the other due to the amplification of the tube. Both of these voltages are somewhat less than 180° out of phase with each other and about equal in magnitude. The resultant signal on the plate is approximately in quadrature (90° out

LEGAL TENDER FOR DEBTS BOTH PUBLIC AND PRIVATE
© 2015 LIVING WATERS
TED STATES
MERICA
1,000,000
JS 2102COR135G
D4
LIVINGWATERS.COM
ONE MILLION DOLLARS
1,000,000

1,000,000

IN G

HERE IS THE MI
to Heaven when
lied, stolen, or used God's nam
lust for her has already commit
these things, God sees you as a lyi
Bible warns that one day God will p
willing that any should perish. Si
means that God can legally dismiss
His only begotten Son, that wh
everlasting life." Then Jesus rose
trust Jesus, and God will give y
daily and obey it. Go

ONE MILLION

THE UNITE

of phase) with the grid voltage. With an audio signal applied to the modulator grid the g_m or transconductance of the tube varies at an audio rate, and, hence, that voltage on the plate of the modulator due to the amplification of the tube varies at this audio rate. Consequently, the resultant voltage at this modulator plate varies in phase at an audio rate and, hence, the signal output from the modulator is phase modulated.

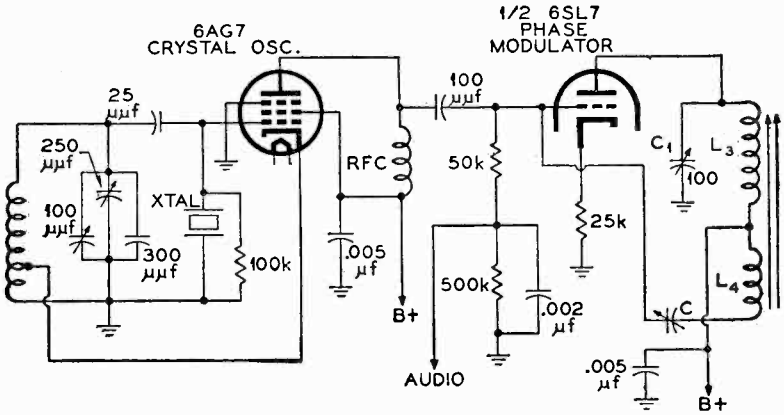

Courtesy Sonar Radio Corp.

Fig. 4-55. The schematic of the crystal oscillator and phase modulator circuits used in the Sonar narrow-band f-m exciter Model VFX 680.

The circuit of Fig. 4-55 is a little different in that variable capacitor C in conjunction with inductance L_4 is inserted to be able to adjust the phase and magnitude of the voltage acting between the grid and plate of the modulator tube. By this method it is possible to increase the phase shift and, hence, the phase deviation of the resultant signal. If the inductance contains a powdered-iron core and if C_1 is variable, the phase shift can be further increased. The characteristics of the powdered-iron slug are such that the d-c plate current of the tube, when varied at the audio rate while passing through the coil, introduces an additional phase shift.

The interesting thing about this exciter unit is that it does not use any means to make the p-m signal directly equivalent to an f-m signal (that is, it does not use any audio correction network). Consequently, the output signal is one of direct p.m. This is the only transmitter discussed in this text that has its output signal directly phase modulated. The maximum peak phase deviation swing for this exciter is equivalent to a maximum peak deviation swing of about 1.5 kc at 350 cycles. This deviation can be controlled by a potentiometer in the input of the audio amplifier, and thus, according to the

amount of frequency multiplication used on the different amateur bands, the final deviation output can be controlled to the desired narrow bandwidth, which can be detected by an a-m superheterodyne receiver.

It has been found by field tests that two very closely separated f-m signals (2 kc apart) can be operated simultaneously without causing the usual splatter of interference often found in the case of a.m. Phase-modulated signals have been known to give less audio distortion due to selective fading than other types of modulation.

An interesting part of this exciter unit is the crystal oscillator circuit shown in Fig. 4-55. This type of circuit is commonly known as a "rubber crystal" oscillator circuit. That is, with the crystal inserted, the circuit can be *tuned* through a certain range of frequency. This means that the circuit exhibits the stability of a crystal oscillator and also the effects of a variable frequency oscillator. The frequency of the crystal chosen is the lowest frequency of the band desired, because in tuning this rubber crystal oscillator the variation will be such that the oscillator can only tune *above* the frequency of the crystal.

QUESTIONS

CHAPTER 4

4- 1. What relationship must exist between the resistance and capacitance of audio correction network in an indirect f-m transmitter in order to make the current flowing in it independent of frequency?

4- 2. Referring to the circuit of Fig. 4-2 on page 97:

a. What is the primary purpose of this balanced modulator circuit?

b. What are some of the critical factors in the proper balancing of the circuit?

c. What function do capacitors C_2 and C_3 serve?

d. What is the purpose of resistors R_2 and R_3?

4- 3. What is the phase relationships between the primary current and secondary current, and between the primary voltage and induced secondary voltage in an untuned transformer?

4- 4. If the tuned primary of a transformer is in series resonance at some particular frequency and the secondary is untuned, what is the phase relationship between the primary voltage and secondary voltage at this resonant frequency?

4- 5. *a.* Compare the amplitude and frequency of the center frequency component of the f-m signal at the input to the first tripler stage (that is, at the output of the modulators) of each frequency multiplier system in the Armstrong dual-channel transmitter.

b. What is the phase relation between the frequency deviation of the f-m signal input to each multiplier system?

4- 6. If the frequency of the master crystal oscillator in the Armstrong dual-channel transmitter is equal to 205.00 kc and the original amount of peak frequency deviation equal to 12.50 cycles, then, referring to the f-m signal output of the last triplers of the dual-channel chain (before the double conversion system):

a. What is the center frequency component of the f-m signal?

b. What is the peak deviation of the f-m signal?

4- 7. Upon what oscillator in the Armstrong dual-channel transmitter does the output frequency from the double conversion system chiefly depend?

4- 8. Referring to Fig. 4-4 on page 102, what would be the center frequency component and peak deviation frequency of the f-m signal output from the double frequency conversion system if the frequency of the master oscillator and original peak deviation frequency were changed to 205.00 kc and 12.50 cycles respectively?

4- 9. If only the crystal frequency of the double conversion system of Fig. 4-4 on page 102 is changed from 918.75 kc to 907.5 kc, what will be the center frequency component output from both the old-band multiplier and the new-band multiplier chain?

4-10. *a.* Compare the connections of the control grid circuits and also the plate circuits of the balanced modulators of Fig. 4-2 on page 97 and Fig. 4-5 on page 108. Give your answers in terms of parallel and push-pull connections.

b. Which would be the more correct designation than "balanced modulators" for the circuits of Fig. 4-2 and 4-5: balanced frequency modulators, balanced phase modulators, or balanced amplitude modulators?

4-11. *a.* What relationship must exist within the circuit of Fig. 4-6(A) on page 111 to make the currents I_1 and I_2 practically 90 degrees out of phase with voltage E_1 and E_2 respectively.

b. Why are voltages E_{R1} and E_{R2}, which are applied to the control grids of the modulator tubes of Fig. 4-6, each shifted in phase by 90 degrees with regard to the crystal carrier voltages E_1 and E_2 respectively?

4-12. Refer to the circuit of Fig. 4-8 on page 113. If the resonant frequency, f, of both a series tuned and a parallel tuned circuit is given by

$$f = \frac{1}{2\pi\sqrt{LC}}$$

where L is the total effective inductance and C the total effective capacitance:

a. What is the correct resonant frequency formula for the parallel resonant circuit that exists between the grids of both tripler tubes? Use the circuit component symbols in the drawing.

b. It is stated in the text that this parallel resonant circuit can also be considered to consist of two series resonant circuits in parallel with each other, each resonant at the same frequency, which is also the resonant frequency of the parallel tuned circuit. What is the formula for the resonant frequency of each of these series tuned circuits? Use the circuit component symbols in the drawing.

4-13. How are the voltages of crystal carrier frequency which are applied to the tripler grids of the circuit of Fig. 4-8 on page 113 made equal in magnitude and 180 degrees out-of-phase with each other?

4-14. *a.* What is the phase relationship between the double sideband voltage applied to each tripler grid of Fig. 4-8 on page 113?

b. Why are the magnitudes of the double sideband voltages applied to the tripler grids very much smaller than those of the crystal frequency signals with which they are recombined at the tripler grids?

4-15. Regarding the block diagram of the Western Electric f-m transmitter shown in Fig. 4-11 on page 117, then:

a. For a transmitted frequency of 100 mc ±75 kc peak deviation, explain why the input frequency to the buffer is equal to 6.25 mc ±4.6875 kc.

b. If the transmitted frequency is to be 107.2 mc ±75 kc, what will be the required center frequency component and peak frequency deviation of the f-m signal input to the buffer or multiplier stages?

c. If the output f-m signal from the fourth doubler has a frequency of 94.372 mc ±77 kc, what is the center frequency component and frequency deviation of the f-m signal output from the frequency divider stages?

4-16. What is the purpose of the frequency dividing system used in the Western Electric f-m transmitter?

4-17. What happens in the Western Electric f-m transmitter when the output signal from the WE 349A amplifier in the frequency divider section is of a different frequency from that of the *crystal* oscillator?

4-18. In the circuit of Fig. 4-12 on page 120, how are the plates and control grids of the reactance tube modulators connected with respect to r.f.? Give your answers in terms of parallel and push-pull connections.

4-19. In the circuit of Fig. 4-12 on page 120:

a. What is the phase relationship between the plate current of the top modulator tube and the voltage at the top of L_1, and also between the plate current in the lower modulator tube and the voltage at the bottom of L_1?

b. What type of reactance is injected into the oscillator tank circuit from the upper modulator tube? From the lower modulator tube?

c. When the applied audio signal is such that the g_m of the lower modulator tube increases, what happens to the injected inductance and capacitance from the lower and upper modulator tubes? Do these changes in reactances increase or decrease the oscillator frequency?

d. The increasing amplitude of an audio modulating signal increases the amount of frequency swing of an f-m signal. Is the required amplitude of the audio modulating signal in the balanced modulator circuit under discussion *less than, more than,* or *the same as* that which would be needed for a single reactance tube circuit to produce the same amount of frequency deviation with respect to the same oscillator circuit?

4-20. In the CBS direct f-m transmitter as shown in block diagram form in Fig. 4-15 on page 124:

a. If the frequency of the master oscillator is changed to 5.861 mc, what must the crystal oscillator frequency be to maintain the 3-mc f-m i-f input to the discriminator of the automatic frequency control system?

b. If the master oscillator frequency remains at 5.617 mc, what must the frequency of the crystal oscillator be if the f-m i-f output of the mixer is changed to 1 mc?

4-21. Why is the *initial* amount of peak frequency deviation of the master oscillators of both the CBS and NBC new direct f-m transmitters the same for 100-percent modulation, even though the center frequencies of the master oscillators are not the same?

4-22. If the output from the new-band NBC f-m transmitted were changed to 91.8 mc, what would be the center frequency component of the f-m signal output from the fourth divider?

4-23. *a.* Is the electron disk of the Phasitron tube a physical part of the tube? Explain briefly.

b. What causes the electron disk to take on the sinusoidal shape indicated in Fig. 4-21 on page 133.

4-24. *a.* What are the two functions of the second focusing electrode of the Phasitron tube?

b. What is done to the modulating coil in order to have the output signal from the Phasitron frequency modulated?

4-25. If the f-m signal output from the last multiplier tube of Fig. 4-24 on page 136 is desired to be 89.2 mc ±75 kc, what can be done within the multiplier system to produce this new signal output while still maintaining the output of the Phasitron at 225 kc ±173.6 cycles.

4-26. Briefly explain the Miller effect and how it is put to use in causing a capacitance to be injected across the master oscillator tank circuit in the Federal Telephone and Radio Corporation's f-m transmitter.

4-27. Regarding the circuit of Fig. 4-26 on page 139:

a. If the effective load impedance in the plate circuit of the 6AB7 modulator tube is made purely resistive, what is the only *variable* component upon which the injected capacitance will depend, assuming all the circuit capacitances are fixed?

b. How is the plate load of the modulator tube made purely resistive?

c. Why is the resistor inserted across the parallel tuned network in the plate circuit of the modulator tube?

4-28. If an r-f VTVM measures 4.5 volts between grid and ground of the modulator tube of Fig. 4-26 and measures 72.9 volts when placed between plate and ground:

a. Compute the value of the grid input capacitance, C_i, of the circuit.

b. Compute the value of the total capacitance injected across the cathode tap of the oscillator tank coil.

c. Compute the amount of peak frequency deviation under theoretical sensitivity conditions.

d. What is the amount of peak frequency deviation under experimental sensitivity conditions? Use the proper graph on page 143, Fig. 4-27 for this.

4-29. Why are the frequency limits of the master oscillator of the Federal f-m transmitters between 3.66 and 4.5 mc?

4-30. Regarding the Federal f-m transmitter:

a. If the master oscillator has a frequency of 4.1 mc, what is the final transmitted frequency? What is the frequency input to the phase discriminator from the divider system?

b. What is the required resonant frequency of the crystal (in the frequency dividing section) if the master oscillator has a stable frequency of 4.1 mc?

4-31. If the master oscillator drifts in frequency so that the voltages applied to the upper diode section of the 12H6 phase discriminator of Fig. 4-29 (in the frequency control system of the Federal transmitter) increases, in which direction has the master oscillator drifted—toward a higher or a lower frequency? Explain your answer.

4-32. *a.* In the Raytheon indirect f-m transmitter, six cascaded phase modulators are used. Each stage handles an r-f and an audio signal. To which signal are the modulators connected in cascade?

b. How is the other signal injected in the modulators?

4-33. If the amount of peak phase deviation of one phase modulator of the Raytheon f-m transmitter were 19.1 degrees instead of 25 degrees, what would be the peak frequency deviation of the f-m output from the last tripler multiplier of Fig. 4-31 on page 149 for the same audio frequency of 30 cycles?

4-34. If the inductive reactance of L in Fig. 4-32 on page 151 is equal to half the reactance of C at the frequency of operation, what is the phase relationship between the total current I flowing in the circuit and the voltage across it when:

a. The resistor R has infinite resistance?

b. The resistor R has zero resistance?

4-35. In the Westinghouse f-m transmitter, how is B-plus voltage supplied to the plate of the 1614 modulator control tube?

4-36. The vector diagram of Fig. 4-37 shows that the current I flowing in the circuit at different instants of applied audio contains both a resistive and a reactive component. Both components are effectively injected across the oscillator circuit. Since an injected *varying* resistive effect will cause a.m. of the oscillator, explain how such a-m effects are made negligible in the Westinghouse transmitter.

4-37. What is the purpose of the audio feedback discriminator network of the Westinghouse f-m transmitter?

4-38. In the frequency stabilization circuit of the Westinghouse f-m transmitter, what is the phase relationship between the outputs of the two 6SA7 mixers illustrated in Fig. 4-40 on page 162 when:

a. The instantaneous modulated frequency of the master oscillator is lower than the crystal oscillator frequency?

b. The instantaneous modulated frequency of the master oscillator is higher than the crystal oscillator frequency?

4-39. *a.* What does a pre-emphasis circuit do to the audio signal?

b. Why is it employed in f-m transmitters?

c. What is the purpose of the de-emphasis circuit in f-m receivers and where is it usually placed?

4-40. *a.* What is the time constant of the pre-emphasis circuit in Fig. 4-48 (B) on page 173 when resistor R equals 220,000 ohms and capacitor C equals 330 $\mu\mu f$.

b. What is the time constant of the de-emphasis circuit in Fig. 4-49 on page 174 when resistor R is equal to 160,000 ohms and C equals 470 $\mu\mu f$?

c. What is the standard time constant for pre-emphasis circuits as prescribed by the FCC?

d. What is the standard time constant for de-emphasis circuits?

4-41. For narrow-band f-m transmitters, what is considered 100-percent modulation?

4-42. Why is it possible to obtain a much larger initial amount of equivalent frequency deviation in most of the indirect narrow-band f-m transmitters than with indirect f-m broadcasting transmitters, even when the initial amount of phase deviation is the same?

4-43. Considering the circuit of Fig. 4-50 on page 177:

a. By what two paths does the r-f oscillator signal that exists at the grid of the modulator find its way to the plate of this modulator tube?

b. Why is resistor R_3 not bypassed?

4-44. From the vector diagrams of Fig. 4-51 on page 179, it can be noticed that the resultant p-m signal, E_R, besides varying in phase, in each instant also varies in amplitude. How are these amplitude variations eliminated in the Link transmitter?

4-45. When using an a-m receiver for reception of narrow-band f-m signals:

a. What must be done to the a-m receiver to reproduce the best possible f-m signal?

b. What is the modulation characteristic of the output signal from the i-f transformer?

c. Why will the reproduced signal be distorted when the set is not detuned?

4-46. *a.* What is meant by a "rubber" crystal oscillator circuit?

b. To what frequency is the crystal cut in a "rubber" crystal oscillator circuit? Why?

CHAPTER 5

THE TRANSMISSION OF F-M SIGNALS

In the preceding chapter we discussed many different f-m transmitters of both wide-band and narrow-band characteristics. The different discussions centered about the exciter unit which essentially consisted of the oscillator-modulator stages, the frequency multiplication system, and the center frequency control system (if the type of modulation was direct f.m.).

The power stages of the different transmitters were not included because the operation of those stages are similar to the power stages in a-m transmitters except for a few details. One of the differences between the power stages as used in a-m and f-m transmitters (especially on the broadcast band) is the frequency involved and the type of modulation. The circuit components and power tubes used in f.m. are chosen to give the proper frequency response characteristics over that portion of the f-m band where they are operative. Another very important difference is the wide bandwidth used in f.m. as compared with the normal maximum of 15 kc used in a.m. The tuned circuits in the f-m transmitters have to be broad enough to handle the bandwidths in f.m. If it were not for these differences, there would be very little difference between the design of a-m and f-m power stages operating on the same power level. However, these differences do exist, and, consequently, they alter the design of the *antenna* systems for f.m. as compared with a.m.

In f-m broadcasting, the range of transmitted frequencies is around 100 mc and in a-m broadcasting around 1 mc. Due to this great difference in frequency, the propagation of f-m signals is much different from that of a-m signals. There is a limitation to the area that an f-m signal can cover compared with the coverage area of a-m broadcast signals. You will notice that so far we have made reference only to the differences between broadcasting f-m and a-m stations. The reason for this is deliberate, because so far as narrow-band f.m. and amateur a.m. are concerned, there is very little difference in the nature of the propagated signals. The frequencies involved in narrow-band f.m. and amateur a.m. are very close, so not much difference exists in the manner in which they are propagated through space.

This chapter will discuss the transmission of f-m signals from the output of the final power amplifier stages to the f-m receiver relative to the broadcast band. In this respect different types of f-m antennas will be analyzed in conjunction with their radiating patterns. After the f-m signal leaves the antenna in its special direction (due to its predetermined radiated pattern) it will travel through space differently from a-m broadcast signals and, consequently, the different layers of the atmosphere and also the nature of the terrain play an important part in f-m signal propagation. This will be seen later in this chapter. The last part of this chapter will deal with the service or coverage area of an f-m signal and also interference effects. Its relative merits and defects will be compared to a-m signals of the broadcast band.

THE TRANSMITTING ANTENNA

The final stage of all transmitting systems is the antenna. In almost all stations the antenna is connected to the final power amplifier stages through some transmission line system. Antennas always play a very important role because they are the final stepping stone in preparing the f-m signal for its propagation through space as an electromagnetic signal. Their designs are equally, if not more, critical than other stages in the transmitters. The purpose of this section is to acquaint the reader with some of the transmitting antennas used in commercial broadcasting stations. The reason for this is that these transmitting antennas are more complicated in design than those used on narrow-band f.m., such as ham and police transmitters.

When considering f-m transmitting antennas, it should be remembered that we have to deal with frequencies well up in the very high frequency region. (The old band f.m. was around 50 mc and the new band is around 100 mc.) Consequently, propagation in f.m. is different from that of a.m., which means that the coverage or service area for f.m. is also different.

One of the most important considerations is that the antenna and its associated coupling network be so designed that it will not cause any phase distortion in the transmitted signal. In a-m transmission the introduction of phase distortion will not be detected by the receiver, but in f-m transmission it will. Phase distortion causes an equivalent frequency change, which means that the f-m signal effectively becomes distorted in frequency. Since the f-m receiver is so designed that it corresponds to frequency variations of the transmitted signal, the distortion will become apparent. Of course, amplitude distortion is also undesired, but the f-m receiver can take care of moderate changes in amplitude by its limiter action or by special detection methods.

To minimize the effects of phase or amplitude distortions that might

be introduced in the f-m signal by the coupling from the final power amplifier stage to the antenna, the input impedance should be broad over the complete peak-to-peak frequency deviation range. This means that, since the maximum peak-to-peak frequency deviation is equal to 150 kc, the input frequency response characteristic of the antenna has to be at *least* broad enough to accept a 150-kc bandwidth, or 75 kc on either side of the carrier frequency of transmission. It should be somewhat broader, because the significant sidebands at peak deviation may extend as far as 100 kc either side of the carrier.

The type of antenna that is employed depends upon the service area to be covered, the position of the antenna within the required service area, and the height of the antenna above the terrain. Where the communication is between two fixed points, a radiated signal in the form of a narrow beam is the most desirable type, because, if the signal were radiated in any direction other than toward the receiver, there would be no receiving antenna to pick up the signal and that energy would be lost. In commercial broadcasting the situation is completely different. The antenna must be designed to radiate outward in all directions, in order to cover the necessary service area where any number of f-m receivers are located.

Due to the nature of the atmosphere and the frequencies involved, the f-m signal radiated from the antenna has to be in a horizontal direction to cover the necessary area with the greatest amount of field intensity. The radiated signal from the antenna is an electromagnetic wave which is alternating at a certain frequency, namely, the frequency of transmission. A half-wave dipole antenna has a certain radiating pattern in both the horizontal and vertical plane. This is best illustrated in Fig. 5-1 which shows the field pattern for a half-wave dipole. The complete field pattern may be shown as a certain volume as in the pictorial cutaway pattern of Fig. 5-1 (A). The shape of the field is in the form of a doughnut. If the dipole were in a horizontal position and we looked straight down on it, we would observe the pattern in the form of a figure eight as shown in Fig. 5-1 (B). With the dipole in a vertical position and looking down on it, we would see a circular pattern as indicated in Fig. 5-1 (C). From the pictorial view of Fig. 5-1 (A) the side view and end view patterns of (B) and (C) are readily distinguishable. It is possible to have a signal radiated in a horizontal plane which is either vertical or horizontally *polarized*. The difference between the direction of propagation and polarization is often misunderstood.

It has been stated that the radiated signal is an electromagnetic signal which means there are two alternating fields involved, the electric field and the magnetic field. These fields are 90° out of phase with each other. When we talk of polarization, *only the electric field*

is being referred to. This means that, according to the position of the antenna, the signal can either be horizontally or vertically polarized. When the dipole is horizontal, the electric field is alternating in a lateral motion such that the signal is *horizontally polarized;* and, when the dipole is in the vertical plane, the electric field is alter-

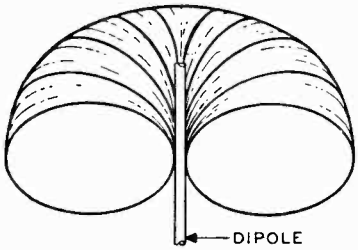

(A)
PICTORIAL PATTERN

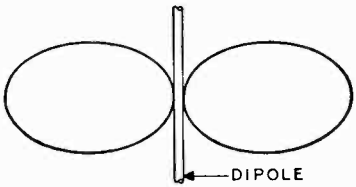

(B)
SIDE VIEW PATTERN

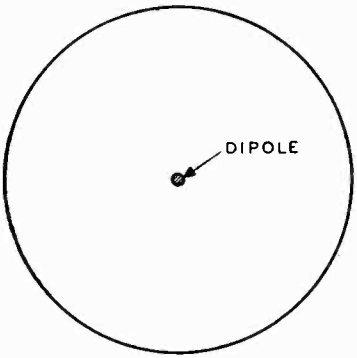

(C)
ENDVIEW PATTERN

Fig. 5-1. The pattern of the electromagnetic radiation from a dipole antenna is shown pictorially in (A). A cross section of the pattern from the side of the dipole is shown in (B) and its appearance when viewed from an end of the dipole is shown in (C). These views of the radiation pattern are drawn for a vertical dipole.

nating in an up and down motion such that the radiated signal is *vertically polarized.* The use of horizontal polarization for f-m broadcasting antennas has been standardized by the FCC, although exceptions may be made.

Generally, f-m broadcasting stations are located approximately in the center of their service areas, so that the horizontal radiation pattern has to be somewhat circular in shape in order to cover the necessary area. This means that the horizontal pattern must be circular in form and, because of the FCC requirements, horizontally polarized. This is accomplished by a number of different methods in which antenna arrangements using more than one half-wave dipole produce, as nearly as possible, a circular *horizontal* radiation pattern.

The more common f-m broadcasting antennas in use today that have a circular horizontal radiated pattern (horizontally polarized) are the turnstile antenna, the circular antenna, the Pylon antenna, and the square loop antennas. There are also many other types of f-m antennas, such as the clover leaf and the rocket antenna. Some of the things which dictate the choice of one style of antenna over another are the impedance matching of the transmission lines to the radiating elements, the shape of the terrain to be covered, and the service or coverage area.

The turnstile antenna basically consists of two half-wave dipoles crossing each other perpendicularly at their mid-points, with the individual dipoles excited 90° out of phase with each other. Placed in a horizontal position, the horizontal field pattern for this antenna is that shown in Fig. 5-2, under the conditions that an equal amount of

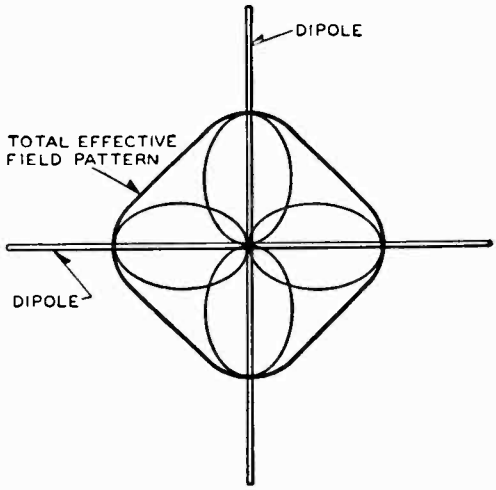

Fig. 5-2. A turnstile antenna consists of two horizontal half-wave dipoles at right angles to each other. Compare the individual patterns here with that of Fig. 5-1 (B). The total effective field assumes an approximate rectangular pattern.

power is fed to each section. The circular antenna is simply a folded dipole bent in a circular shape, which gives a horizontal field pattern that is fairly circular. The Pylon antenna is a long piece of metal which is bent into a slotted cylinder where the complete cylinder itself is used for the radiation of the f-m signal. The square loop antenna is just what the name implies, a square shaped loop, where the sides of the square are simple dipoles, folded dipoles, or the like. The horizontal field pattern for these four types of antennas, or variations of them, is basically circular in shape.

Antenna Gain

In dealing with a single dipole or a single section (called a "bay")

of a turnstile, circular, or square loop antenna, we are concerned with two patterns: the horizontal pattern and the vertical pattern. Since any signal radiated in the upward direction toward the sky layers is wasted, an antenna having substantial radiation in the vertical direction is wasteful and the effective radiated power from the antenna is small. In practically all f-m broadcasting antennas a *number* of antenna elements or bays are used, stacked vertically a certain distance apart from each other to reduce the power radiated in the vertical direction and to concentrate or increase the power radiated in the horizontal direction. The larger the number of bays, the greater the concentration of power in the horizontal direction, but, in most cases, increasing the number of bays beyond a certain point decreases the effective concentration, so that a practical limit exists on the number of bays used.

When the power in the horizontal direction is effectively increased, the antenna is said to have a gain in that direction. Two separate gain factors are involved in antenna gain, namely, *antenna field gain* and *antenna power gain.* In this connection it should be stressed that the total power radiated from the antenna is never greater than the power input to the antenna. In fact, the best that can be achieved is that the input and output power be approximately equal, with the output power being slightly less due to transmission and feeder line losses. Thus when we refer to one of the antenna gains we only mean a gain in the *effective amount of radiated power as based upon a certain standard.*

In other words when a single dipole antenna, horizontally polarized, is used, a certain signal voltage will appear at the input to a receiver antenna which is situated about 20 miles from the transmitting antenna. If the number of dipoles is increased in accordance with what was just discussed, the antenna radiation in the vertical direction will be reduced and increased in the horizontal direction. That is, the radiated signal from the vertical direction is pushed or forced into the horizontal direction. Under these circumstances, the receiver antenna 20 miles distant has an increase in the input signal voltage.

This clarifies how the reference to antenna gain is established. The antenna field gain or power gain is based upon measurements made with a vertical half-wave antenna as established by the FCC. If we replace the vertical half-wave antenna with any multielement f-m antenna, there will be an increase in the field intensity in the horizontal direction. If this increase is expressed as a ratio, the antenna field gain can be calculated. Consequently, the antenna field gain is equal to the ratio of the field intensity measured with some multielement antenna to the field intensity with the vertical half-wave antenna. According to the FCC,[1] these measurements are to be made

[1]According to the "Standards of Good Engineering Practice Concerning

at one mile from the antenna with a 1-kw input to the half-wave vertical antenna. At this one mile point, the field intensity measured for the half-wave antenna is equal to 137.6 millivolts per meter. This measurement is made under the conditions of *free space* field intensity, which means that the radiation signal existing at this one mile point is free of any reflections from the earth or other objects. Therefore, the antenna field gain is equal to the following:

$$\text{Antenna field gain} = \frac{\text{field intensity in mv/m for multielement antenna}}{137.6}$$

The field intensity for the multielement antenna is also measured at one mile distant and at an input to the antenna of 1 kw.

The term power gain is used more often than field gain, and the former term is generally used to express the operation of the antenna. The power gain is also based upon the use of a vertical half-wave antenna and it is only natural that there exists some relation between the field gain and power gain. The relationship is such that the value of the antenna power gain is equal to the antenna field gain squared. Thus, with *F.G.* meaning the antenna field gain and *P.G.* meaning the antenna power gain, the mathematical expression for their relation is

$$P.G. = (F.G.)^2$$

or

$$F.G. = \sqrt{P.G.}$$

The true significance of the power gain of an antenna may not be immediately evident. But from the fact that the power gain of an f-m antenna is based upon a standard half-wave antenna, it can be deduced that having a greater power gain requires less transmitter output power to produce the same field intensity at some specific point. In other words, if a 50-kw transmitter using a single half-wave dipole antenna produces a field intensity of, say 5000 microvolts, at some specific distance away from the transmitter, a similar f-m transmitter operating on 10 kw, but using an f-m antenna (in the same location) that has a power gain of 5, will produce the same field intensity at the same point.

From this simple analysis it can be seen that for a specified amount of effective radiated power in the desired directions we have two methods to choose from. We can use either a high powered transmitter with a simple antenna having unity power gain (or less) or a much lower powered transmitter with a much higher antenna power gain to accomplish the same thing. However, since it is less expensive

---

FM Broadcast Stations" of the FCC, antenna field gain for an f-m broadcast antenna is defined as "the ratio of the effective free space field intensity produced at one mile in the horizontal plane expressed in millivolts per meter for 1-kw antenna input power to 137.6 mv/m."

to employ an f-m antenna with high power gain than it is to increase the power output of the transmitter, practically all f-m broadcasting stations use some form of multielement antenna that has a sufficient power gain to cover the necessary service area.

The Circular Antenna

As mentioned previously, most types of circular antennas consist of a vertically stacked series of folded dipoles which are bent in the form of a circle. A typical circular antenna as used for f-m broad-

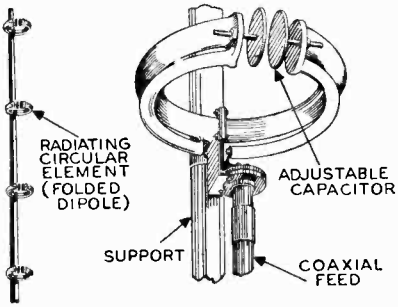

Figs. 5-3, left, 5-4, right, 5-5 below. A four-bay circular antenna, one element of which is shown at the right. Below is shown the horizontal field strength pattern taken at 107 mc for the bottom bay of an 8-bay antenna.

Courtesy General Electric Co.

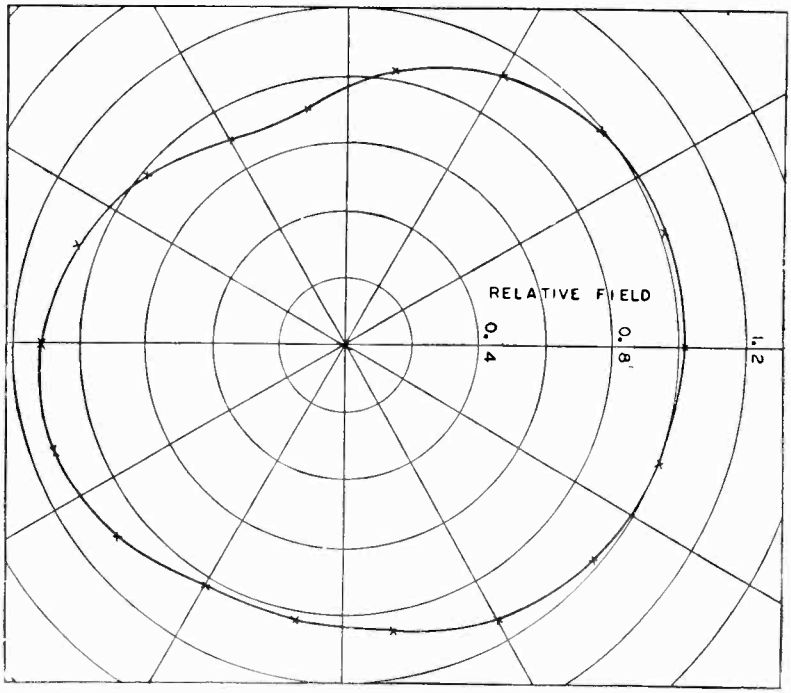

casting is illustrated in Fig. 5-3. The type shown is a four bay circular antenna of the General Electric Company. In Fig. 5-4 a single radiating element is illustrated. The adjustable capacitor on each folded dipole permits tuning each radiating element to resonance at the frequency of operation of the f-m transmitter. The measured horizontal field strength pattern taken at 107 mc for the *bottom* bay of an 8-bay antenna (located at the point of largest pole diameter) is shown in Fig. 5-5. It should be noted that the effect of the pole on the horizontal field pattern is quite small, and this effect will decrease as the pole size tapers toward the top. This slight directional effect can be used to advantage in certain installations.

To show that, as the number of bays is increased, the vertical radiation pattern is decreased, a number of curves is drawn as illustrated in Fig. 5-6. These curves are a plot of the relative field intensity versus the elevation angle from the horizontal. They show that, as the num-

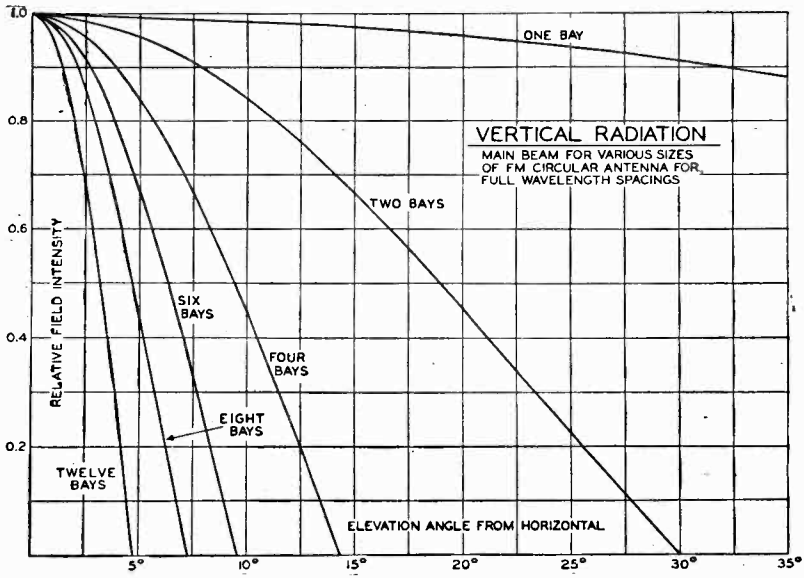

Courtesy General Electric Co.

Fig. 5-6. These curves show that as the number of bays of the antenna shown in Fig. 5-3 is increased, the vertical radiation pattern is decreased.

ber of bays is increased, the vertical pattern is constantly "squeezed" down to a point where, for 12 bays, it is about 5 degrees from the horizontal. This means that the vertical pattern is shaped in the form of two leaves about 180° out of phase with each other and that the angle of measurement is made along the line going through the center of these leaves. In this graph the bays are separated from each other

by full wavelength spacings. It was found that for a 2-bay circular antenna of this sort the antenna power gain is 1.7; for a 4-bay antenna the power gain is 3.63; and for a 6-bay antenna the power gain is 5.50.

The Turnstile Antenna

The turnstile antenna, developed by G. H. Brown, was one of the very first types of antennas used for f-m broadcasting. There are a number of variations of the turnstile antenna, but essentially all types produce a roughly circular horizontal pattern as shown in Fig. 5-2. The greater the number of turnstile elements, the greater will be the power gain, because the vertical field pattern is constantly reduced in power and the horizontal field increased.

Fig. 5-7 illustrates two different types of turnstile antennas. In part (A), the turnstile antenna consists of 4 bays, where each bay

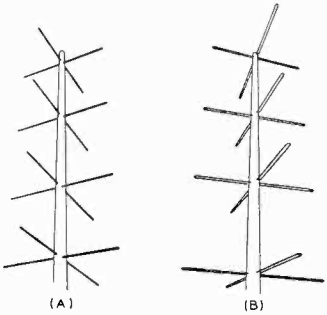

Fig. 5-7. Two types of turnstile antennas are illustrated at the left. In (A) each of the four bays consists of two half-wave dipoles and in (B) each individual bay consists of two half-wave folded dipoles at right angles to one another.

itself contains two half-wave dipoles at right angles to each other. In part (B), the turnstile antenna also consists of 4 bays, but the individual turnstile bays consist of 2 half-wave folded dipoles at right angles to each other. Some of the reasons why one kind of turnstile antenna is used rather than another are the spacing between bays and the impedance matching of the transmission lines to the radiating elements. These are typical problems which are too complex to analyze here. They exist in all types of broadcasting antenna systems and are not peculiar to the turnstile antenna.

In most types of multielement antennas (as those discussed in this book) the spacing between the bays is some portion of the wavelength of the frequency of operation. The actual value of spacing used differs for different antennas; but in general the spacing is so chosen that a portion of the vertical field pattern from each bay cancels some of the vertical pattern from an adjacent bay, in which case the field energy is increased in the horizontal direction. As the number of bays

is increased, greater cancellation of the vertical component is obtained, and the larger the horizontal component becomes. Hence, the greater the power gain.

The Pylon Antenna

This antenna, which is of RCA design, is one of the latest to be added to the field of f-m transmitting antennas. The Pylon antenna essentially consists of a long metal sheet which is rolled into a cylinder with a slotted section. A drawing of a two-section Pylon antenna is illustrated in Fig. 5-8 (A), and an enlarged cross sectional view in Fig. 5-8 (B). Power is fed to the slot of the antenna in which case this slot functions as a transmission line. This effectively means that the complete cylindrical surface of the antenna is used as a radiating element. This antenna can also be visualized as being made up of an infinite number of circular antennas, one stacked on top of the other, with each one serving as a radiating element.

The diameter of the antenna is a controlling factor in the shape of

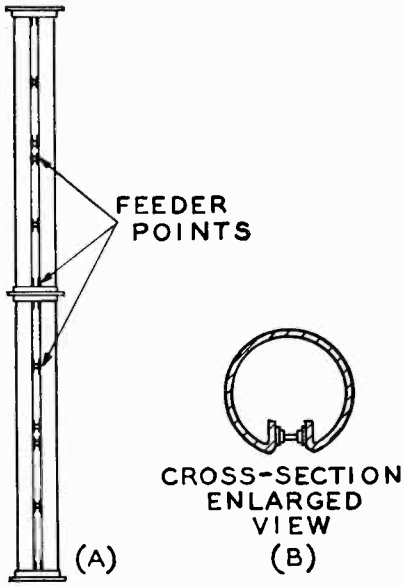

Fig. 5-8. The Pylon antenna consists of a long metal sheet rolled into a cylinder with a slotted section, a cross sectional view of which is shown in (B). When power is fed to any of the feeder points indicated in (A), the slot functions as a transmission line. The two section Pylon antenna at (A) increases the horizontal field pattern as well as the gain as compared to a single section.

the horizontal radiation pattern and also the length of the antenna section so far as resonance at the desired frequency is concerned. The width of the slot of the antenna is the most important determining factor in the input impedance of the antenna.

As with the other antennas, placing one Pylon section over another increases the horizontal field pattern as well as the power gain.

The Square Loop Antenna

Another variation of an f-m broadcasting antenna is the square loop antenna. This type antenna is also supposed to give a somewhat

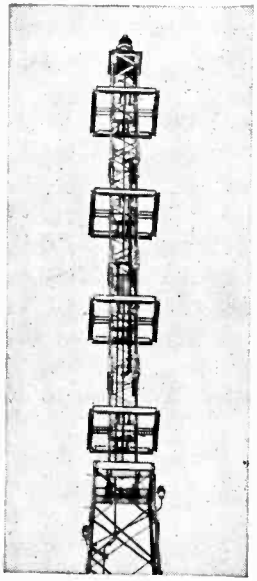

Fig. 5-9, left, Fig. 5-10, below. The square loops of the antenna shown in (A) give a somewhat greater power gain than either the circular or turnstile antennas from the standpoint of the number of bays used in each type. Graph below indicates the number of degrees separation between the loops plotted against the horizontal power gains for a different number of loops. This shows that the greater the number of loops, the greater is the power gain.

Courtesy F. T. & R. Corp.

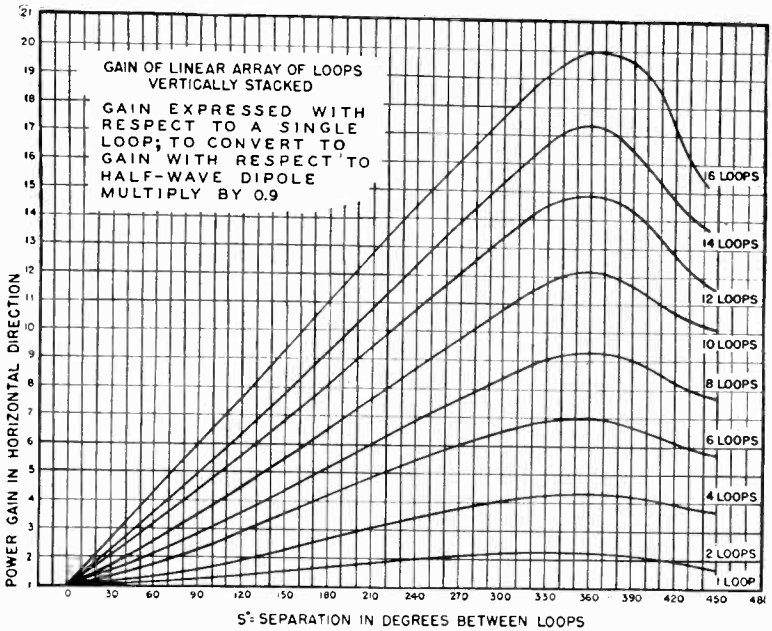

circular horizontal pattern (and also to be horizontally polarized). The features relative to the increase in the number of bays, reduction in vertical power, and increase in horizontal power holds true for this type antenna as well as the others. The square loop antennas give a somewhat greater power gain than either the circular or turnstile antennas, from the standpoint of the number of bays used in each type. A pictorial view of the Federal Telephone and Radio square loop antenna is shown in Fig. 5-9. A 4-bay antenna is shown; the spacing between loops for this arrangement is about 330° of the wavelength at the center of the f-m band (where 360 degrees is equivalent to one wavelength). Each side of this square loop is approximately one-half wavelength long.

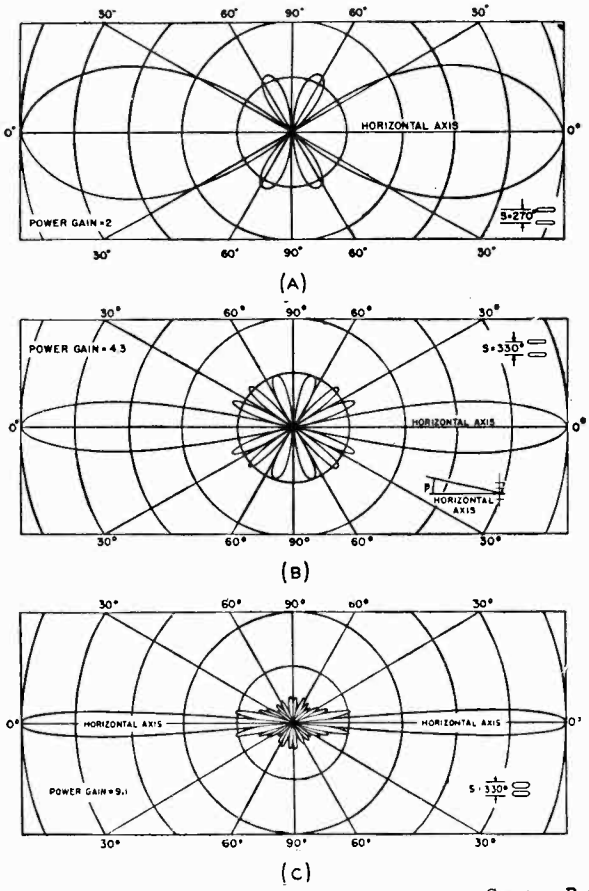

Courtesy F. T. & R. Corp.

Fig. 5-11. Vertical radiation patterns for 2, 4, and 8 loops in (A), (B), and (C), of the square-loop antenna show that as the number of loops is increased, the vertical power radiated is decreased.

An idea of how the power gain of the antenna is affected by the separation between loops, as well as the number of bays, can be had from the graph of Fig. 5-10. This graph, according to computations made by Federal Telephone and Radio Corporation, shows the plot of degree separation between loops versus the horizontal power gains for a number of different square loop antennas. The graph makes it immediately obvious that increasing the number of loops increases the power gain. It is also seen that approximately 1 wavelength separation (360 degrees) between loops give the maximum power gain for practically all loop combinations. The gain increases in the horizontal direction as the number of loops, because the power in the vertical direction is decreased. In Fig. 5-11 are illustrated three vertical radiation patterns for different loop combinations of 2, 4, and 8 loops. The power gain and separation between the loop elements are indicated with the drawings. Check these power ratings with the graph of Fig. 5-10, and it will be seen that they are correct. From these vertical patterns, as determined by Federal Telephone and Radio Corporation, it is seen how the strength of the main vertical loops is decreased as the number of bays is increased. This means more power for the horizontal field pattern and, hence, a greater power gain for the antenna.

If the horizontal radiation pattern were calculated by mathematics, the pattern would be somewhat in the shape of a square, because the calculations would be done without taking into account the *end effects*

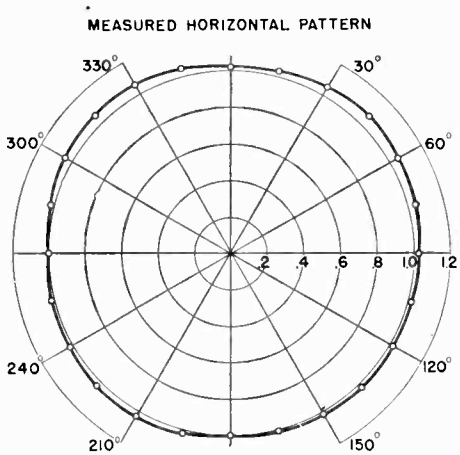

Fig. 5-12. The measured horizontal radiation pattern of the square-loop antenna array is circular, which if it were calculated mathematically, would be approximately a square, as this method does not take into account the end effects of the half-wave elements of each square loop.

Courtesy F. T. & R. Corp.

of the half-wave elements of each square loop. (This end effect has some special significance in the voltage and current distribution.) The horizontal radiation pattern, taking these end effects into account,

would be the result of a *measured* pattern. This measured pattern is shown in Fig. 5-12, where it is seen that the true pattern is quite circular in shape, which is a desirable characteristic.

Other Antenna Considerations

From the standpoint of power gain, one of the most important things determining the type of antenna used, is the situation of the antenna and its height above the average terrain.[2] The f-m antenna should be located as high as possible because the radiated waves are then directed that much farther away from the ground, and, consequently, there is less chance of reflected ground waves. By this method, and by the horizontal pattern being increased in gain (more directional), the coverage area is also increased. In other words, the higher the antenna location, the greater will be the coverage area for a given transmitter power output.

In the installation of an antenna, a number of conditions relating to the effects of the weather have to be taken into account. In other words, besides the construction of the antenna proper, the construction of the supporting mast of the antennas also has to be mechanically rigid in design. Both the antenna and mast have to be able to withstand certain weather conditions, such as high wind velocities and ice formation. The design of the antenna is the more critical because of these weather conditions than the mast, since the antenna itself is the radiating system for the f-m signal.

PROPAGATION OF THE F-M SIGNAL

We now have reached the point where we are concerned with the electromagnetic energy that is radiated from the antenna. How does this energy reach the receivers? What obstacles are in its path and how are they overcome? These are just a few of the topics that should be understood for a true picture of how f-m energy is propagated through space. The most important thing to bear in mind is that we are dealing with frequencies in the very high frequency region and the propagation of energy at these frequencies, whether f-m or a-m, is different from the propagation of signals of longer wavelengths. There is a great deal of difference between an a-m and an f-m signal,

---

[2]According to the "Standards of Good Engineering Practice Concerning FM Broadcast Stations," of the FCC, antenna height above average terrain is defined as "the average heights of the radiation center of the antenna above the terrain 2 to 10 miles from the antenna. (In general a different antenna height will be determined for each direction from the antenna. The average of these various heights is considered as the antenna height above average terrain.)"

both operated about the same high frequency, when the signals are picked up by the receiver. One of the greatest differences is in the noise characteristics of the signal (that is, signal-to-noise ratio); this was discussed in the first chapter.

The propagation of radio waves in general can be explained by considering that the signal which leaves the antenna of the transmitter is made up of two parts: a ground wave and a sky wave. There is no sharp separation between these two waves; but they are distinguished from each other by the fact that the ground wave includes the low-angle part of the radiation which travels parallel to the ground, while the sky wave consists of the higher-scale radiation which travels out into the upper atmosphere.

The atmosphere consists of a number of different layers of gases, each layer being a certain thickness and concentration. These layers extend about 250 miles above the earth's surface. The first layer is called the troposphere and extends about 8 to 10 miles above the earth. The last layer is called the ionosphere and starts at about 60 miles from the earth's surface and extends upward to about 250 miles. The ionosphere plays an important role in the propagation of radio waves. The ionosphere, as well as the rest of the atmosphere, consists of a number of different types of gases. However, the ionosphere part of the atmosphere contains gases that are in a highly ionized state. This ionization is caused by certain rays from the sun, and, consequently, the degree of ionization of the ionosphere varies at different times of the day, exhibiting the greatest difference between day and night. In brief, by ionization we mean that molecules of gas when acted upon by the sun's rays are broken up into free positive and negative charges called *ions* and *free electrons* respectively. The air in this ionosphere region is very rare, so that the likelihood of having the positive ions combine with the free electrons is much less than the actual breakup of the gas molecules by the sun's rays into these ions and free electrons. Therefore, something of an equilibrium point is reached where the ionization of the ionosphere gases is prevalent.

Ionization exists in all the layers of the atmosphere, and the degree of ionization increases with increase in height away from the earth. In the region where the pressure is low, as in the ionosphere, the degree of ionization is greatest, because in low pressure regions it is difficult for an ion to find a free electron with which it can combine. The depth of the ionosphere layer is about 190 miles, but the free electrons and ions are concentrated in three main regions of the ionosphere. These three regions are termed the E, F_1, and F_2 layers in the order of increasing altitude. In other words, the ionized gases of the ionosphere are not evenly distributed throughout this region but are stratified or laminated. During the night, these three ionized layers of the ionosphere distribute themselves somewhat differently

from in the daytime. Some differences in the location of these layers can also be distinguished for the various seasons.

These ionized layers play a very important role in the propagation of certain radio waves. The layers tend to reflect or refract certain radio waves, in varying degrees, back toward the earth. A picture of this will make this analysis clearer. In Fig. 5-13, a number of different radio waves are shown being radiated from an antenna. These radi-

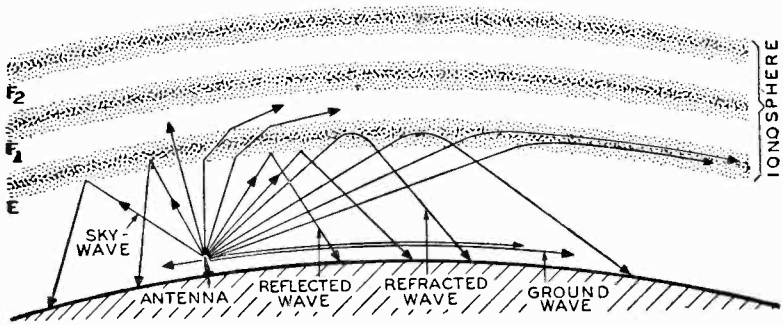

Fig. 5-13. The ionized layers of the ionosphere reflect or refract radio waves to a greater or lesser degree depending on the frequency of the waves and other factors explained in the text.

ated waves consist of ground and sky waves. The sky waves are seen to be "reflected" by the *E* ionized layer in some instances and refracted in others. The refracted waves reach the earth quite a distance from the antenna. However, frequencies above 30 mc or so will not be reflected or refracted by the ionosphere except in rare instances. It may be thought at first that frequencies in the a-m broadcast range can make use of the ionosphere as a means of propagation. This is not true during the daytime, because that layer of atmosphere just below the *E* layer of the ionosphere absorbs a great deal of the energy radiated at these frequencies, since this layer is somewhat ionized and has a higher pressure than the ionosphere. If the frequency of the waves is not too high and if the atmospheric region encountered is of low pressure and has a high degree of ionization, the radio wave may be reflected or refracted and returned to the earth. However, if the frequency of the wave is quite high, as with f-m signals, the layers of the ionosphere will not reflect or refract the sky layers but will allow them to pass through to outer space.

Thus sky waves of different frequencies are affected variously by the layers of the atmosphere. When a signal of low frequency (long wavelength) is radiated from an antenna, it travels at a certain velocity. Upon reaching the ionosphere, it is temporarily retarded and returned to the earth from a lower part of the ionosphere than a

high frequency signal (short wavelength). Therefore, the distance a sky wave can travel depends upon its frequency. The density of ionization of the layers increases with distance, and as the frequency is increased, the wave pierces deeper and deeper into the ionosphere until it reaches a point where it is reflected or refracted back to the earth.

Consequently, it is evident that some relationship exists between the density of the ionized layers and the frequency of an electromagnetic wave, such that at some point the wave will be returned to earth. Since the density of these ionosphere layers (often called the electron density) is fairly constant during certain seasons and during parts of the 24-hour day, there exists some limit as to how high the frequency of the sky wave can be and still be reflected by the different layers of the ionosphere. This limitation is called the *critical frequency,* and a critical frequency exists for each ionized layer with respect to its electron density.

Under the foregoing circumstances, a-m broadcasting stations use the ground waves as the chief means of propagation during the daytime, and the f-m signals use the horizontally directed wave and also the ground reflected wave. It is difficult to use the direct ground wave above the a-m broadcasting frequencies because, as the frequency of transmission is increased, the ground wave becomes more and more attenuated and cannot be used for communication, except over extremely short distances. The sky wave plays a very important role in propagation between 1.6 and 30 mc and makes possible long distance reception due to the reflected and refracted waves from the ionosphere.

As mentioned before, at frequencies above about 30 mc reliable reception by means of the sky wave is no longer possible. At these frequencies the sky wave is not always bent back toward earth by the ionosphere, but instead frequently passes right through and is lost in outer space. Note that this loss of the sky wave is the essential difference between the propagation of waves above and below 30 mc. There is, of course, no sharp transition at this frequency.

At frequencies above 30 mc, which is the range of most f-m signals, the ground wave is attenuated even more rapidly than at the lower frequencies. This greater attenuation of the ground wave for v-h-f signals is a result of the losses which are caused by the currents induced in the earth near the surface. These same ground losses are also present at the lower frequencies, but the ground wave for the v-h-f range is more rapidly attenuated because the induction effect becomes greater as the frequency is increased.

The effect of this loss of the sky wave and the rapid attenuation of the ground wave is to limit the range of a transmitter working at very high frequencies to the *horizon range* of the transmitting an-

tenna. This is so when the receiving antenna is practically at ground level, as is the case in many home installations. By horizon range is meant the distance the wave travels from the transmitting antenna to the horizon as viewed from the antenna. With this definition of horizon range, it is immediately seen that by increasing the height of an antenna (by increasing the size of its mast or by putting the antenna on higher ground) the horizon range will, also, be increased.

Besides increasing the horizon range, raising the transmitting antenna also increases the *line of sight*. The line of sight is also increased when the *receiving antenna* is raised. Fig. 5-14 makes this somewhat

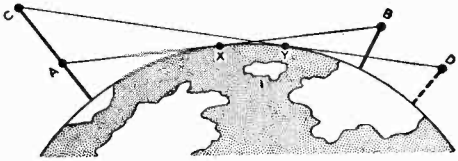

Fig. 5-14. The line of sight is shown between two antennas at *A* and *B*. If the antenna *A* were raised to position *C*, the line of sight would be extended to *D*.

clearer. Points *A* and *B* represent two antennas, one a receiving antenna and the other a transmitting antenna. Line *AB* represents the line of sight between these two antennas. The line of sight is the maximum distance that one can see from the top of one antenna to the top of the other antenna before the earth blocks out the view. In Fig. 5-14 this line *AB* just touches the earth at point *X* (it is said to be tangent at this point). If antenna *A* is raised to point *C* and if an observation from the top of point *C* is made, the line of sight between the two antennas is said to increase. By this is meant that, if antenna *B* is moved so that from the top of antenna *B* to the top of antenna *C* a new line of sight is formed, this line of sight would be greater than *AB*. This is shown in Fig. 5-14 where point *D* represents the new position of antenna *B* and point *Y* is the point where the new line of sight just touches the earth. From this diagram the new line of sight is equal to line *CD* which is seen to be greater than the old line of sight *AB*. It will also be noted that the horizon range has also been increased from distance *AX* to distance *CY*.

Propagation of f-m signals can cover distances beyond the line-of-sight range when the effective radiated signal from the antenna is strong (that is, either a high powered transmitter or an f-m antenna with a high power gain, or both). This is primarily caused by the directed f-m radiated signal undergoing diffraction and refraction as it travels toward the receiver over the curvature of the earth, which means it is not following exactly a straight line path. This is a result of the nature of the atmosphere (principally the troposphere) at different distances from the earth.

At night the effects of the sun's rays are diminished to such an extent that the layer of atmosphere just below the ionosphere, which

heretofore has absorbed the a-m broadcast signals, loses its absorption characteristics. Therefore, a-m broadcast frequencies can use the ionosphere as a means of travel during the night. In other words, during daylight the frequencies of the a-m broadcast band use the ground wave as a means of propagation, and at night they use the sky waves as well, as a means of propagation via the ionosphere. Since sky waves, compared with ground waves, can effectively travel over longer distances from the transmitting antenna with smaller losses in field intensity, it is readily seen that a-m broadcasting coverage at night can be much greater than during daylight.

SERVICE OR COVERAGE AREA OF F.M.

Now that we have covered the essential details as to how electromagnetic radio energy can be propagated through space, we should know something about the coverage or service area of an f-m station. In the section on f-m broadcasting antennas it was shown that the radiated signal from the f-m antenna is strongly directive horizontally, with very little vertical radiation. It was also shown that the horizontal radiation pattern is practically circular in shape, indicating that the coverage area is somewhat of the same shape. However, we do not know what relationship f.m. bears to the amount of area that can be covered (serviced properly) as compared with the coverage area of a-m signals. Since the f-m signal is highly directional and depends primarily on its straight line path of propagation, with as little reflection from the ground as possible, a limitation exists as to the area it can service. However, due to inherent factors of the f-m wave and the receiver design the coverage or service area of a station using f.m. is considerably more uniform than that of a station using a.m. This difference is not due to any difference in the manner in which the f-m and a-m signals are propagated, but rather it is due to the decreased sensitivity of an f-m receiver to noise and to interfering signals. These two factors combine to make it possible for an f-m transmitter to cover a given area with more uniform freedom from noise and interfering signals, up to the horizon or line of sight range of the transmitter.

When *amplitude* modulation is used, the signal-to-noise ratio is high near the transmitter, but the intensity of the signal falls off rapidly as the distance from the transmitter increases. Furthermore, at points near the horizon limit of the transmitter, the signal strength may reach a point where man-made interference and natural static are comparable to the signal. Thus, the signal-to-noise ratio is correspondingly small and reception is noisy.

If we consider the same conditions using *frequency* modulation instead of a.m., then we have a different situation. Near the horizon limit the signal is still just as weak as in the preceding a-m case.

However, the receiver discriminates against the noise by responding only to the signal and not to the noise. Thus, the effective signal-to-noise ratio is increased and reception is improved.

The ability of an f-m receiver to differentiate between the desired signal and interfering signals on the same or adjacent channels is of great advantage in providing more reliable reception over the complete service area of the transmitter. Investigation discloses that in order to prevent an f-m receiver from responding to an interfering signal, the desired signal must only be twice as strong as the interfering signal, whereas in a.m. the ratio has to be as much as 100 to 1, or even more, as was mentioned in chapter 1. Provided this low ratio condition for f.m. is satisfied, the f-m receiver will reproduce only the stronger signal and completely eliminate the weaker signal — except where the interfering signal is on exactly the same frequency as the desired signal.

As a result of this condition, it is possible to assign stations to the same frequency when the geographical separation between the stations is relatively small and a large area is to be covered. This can be done without running the danger of interference between stations operating on the same frequency. There will be no interference provided that the frequencies and stations are so assigned and located that the desired signal will always be at least twice as strong as the interfering signal. An additional factor which makes f.m. economical of space in the radio spectrum is the ability of the receiver to discriminate against noise. This makes reception more uniform over the entire range of the transmitter, so that the distance between transmitters can be increased. As a result, fewer transmitters are required satisfactorily to cover a given area when f.m. is used.

One of the biggest problems in the coverage area of a-m stations is the question of night transmission. We have shown that during the night the frequencies of the a-m broadcast range are reflected from the ionosphere and, hence, cover greater distances than during the daytime. In other words, at night the propagated signals from these stations greatly exceed their daytime service area. Since this is so, many a-m stations that normally operate during the day have to close down at night for reasons of interference. The increased coverage area is so great that it overlaps the coverage area of other broadcasting stations and interference results in the receivers falling within the overlapped areas — especially if the signal ratio between these two signals is less than 100 to 1. Due to the closing of many a-m broadcasting stations during the night, there is a difference in the number of operating a-m stations within the a-m band during the day and night. In f.m. the situation is different. There can be as many f-m stations on the f-m band during the night as during the day. The reason for this is that f-m signals are propagated in a uniform direction

and do not use the ionosphere as a means of propagation at all. Consequently, all f-m stations can operate 24 hours a day.

INTERFERENCE

In the discussion of the coverage area of f.m. compared with a.m., we have to take into account interference effects with respect to these different types of transmission. We have discussed some features relative to interference at the beginning of this text and also in the preceding section of this chapter. If a fairly good concept of interference with respect to both the a-m band and f-m band is acquired, many a questionable point about the erratic operation of a-m and f-m receivers will be understood.

A certain limit exists as to the area each broadcasting station can cover. For instance, a standard might have been set for a certain radio transmitting station not to exceed a field intensity of 1000 microvolts per meter at 25 miles from the transmitting antenna. It is, therefore, said that this station's coverage area is one of a 25-mile radius where a *1000 $\mu v/m$ contour* cannot be exceeded. In other words, the coverage area, besides being classified into a circle of so many miles radius, is also classified by a field intensity contour within this circle which cannot be exceeded. These limitations act to prevent interference between stations operating within different service areas.

If the signal from any transmitting station interferes with a desired a-m signal at a receiving set, the ratio between the desired and undesired signal must be about 100 to 1, or greater, for the undesired signal not to interfere with the reception of the desired signal. In f.m. the situation is different, the ratio necessary being 2 to 1, or greater. From this simple analysis, it is seen that there has to be greater separation between the *contours* of a-m broadcasting stations than between f-m stations. Hence, due to interference between stations, there has to be a greater frequency separation between transmitters operating on the a-m band. Therefore, a limited number of a-m broadcast transmitters exist throughout the country, somewhere in the vicinity of *one* thousand compared to the thousands possible on the present-day f-m band.

These interference problems were discussed under daytime conditions, but under nighttime conditions the interference situation for a.m. is even worse, due to the extended coverage range of the radiated a-m signals. A number of things have been done to reduce this nighttime interference besides shutting down some stations during the night. Some of the special measures undertaken are to make the a-m antenna more directional at night in order to reduce the use of the sky wave, to reduce the power of the transmitter, and to increase the adjacent channel separation between stations operating within the same coverage area. The power of a transmitting station which is

greatly interfered with may have to be increased so that the field intensity of the desired signal at the different receivers will be greater by a ratio of at least 100 to 1 than the undesired signal. In some cases the solutions designed to reduce interference also reduce the coverage area from what it was during the day, as when a directional antenna is used to offset interference at night.

Interference in an f-m receiver which is within an area where two f-m signals appear, is not nearly so serious as in a.m. First of all, the frequencies of the signals have to be somewhere near each other for perceptible interference to take place. Secondly, if the ratio of the desired to undesired signal is always greater than 2 to 1, no interference will take place if the two frequencies involved are separated by 200 kc, that is, operating in adjacent channels. When the interference is between two signals operating on the *same* channel frequency, the ratio has to be at least 10 to 1, or higher, to prevent interference. When the separation in frequency between the two interfering f-m signals is 400 kc or more, there is less chance for interference.

Even though an f-m receiver is located within a given f-m station's coverage area, it still may be possible for the receiver to have very weak reception, or even no reception, on certain channels. This occurs when the directed wave from the antenna is reflected from some object and, therefore, does not reach an f-m receiver on the opposite side of the object. This may occur frequently in hilly country or in cities where there are large buildings. The picture in Fig. 5-15 illustrates this case of reflection very simply. The directed wave is seen to hit the hilltop from which it is reflected and does not reach

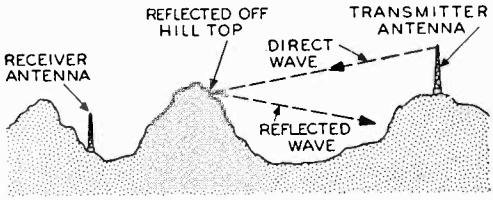

Fig. 5-15. If the receiving antenna is below an obstruction, as in the sketch, the h-f radiation from the transmitting antenna will be reflected instead of going to the receiving antenna.

the receiver antenna. In those places where the transmitting antennas are fairly high and where the coverage area consists of reasonably flat terrain, f-m reception will be most favorable.

From the discussion so far, it might be thought that it is not possible, under regular operating conditions, for f-m signals to be propagated beyond their normal coverage range. It is, however, possible for something like this to occur under special atmospheric conditions. At times a change in the weather causes changes in atmospheric conditions not far above the earth, namely in the troposphere layer. These

changes are such as to cause the characteristics of the gaseous material of certain parts of the troposphere to be changed, in which case the dielectric constant of that part of the troposphere also changes. This change in dielectric constant is great enough at times to cause high-frequency waves to be reflected and refracted from the troposphere instead of passing through the atmosphere and being lost in outer space.

Since these abnormalities in the dielectric constant occur a reasonably short distance above the earth (about one mile or so), it is possible for some f-m waves, even though they are highly directive in the horizontal direction, to be propagated through space via this sky wave. Under such conditions, an f-m signal may have sufficient signal strength to be heard outside its normal coverage area and can thus cause interference with other stations operating in a different coverage area.

It is also possible for interference to occur in f-m receivers due to the harmonic of some other transmitter finding its way into a receiver which is tuned to an f-m signal in a given coverage area. This can be shown by a typical example in reference to one of the ham bands. The frequency range of 50 to 54 mc is allotted to amateur transmission by the FCC. Most types of emission are allowed to operate on this complete band with amateur f.m. allowed to operate only on the 51.0-to-54.0-mc portion of it. Since the commercial f-m broadcasting range is between 88 and 108 mc, it is readily seen that the second harmonic of these amateur frequencies can cause interference. In other words, the second harmonics of this amateur band of 50 to 54 mc are 100 to 108 mc and, if these second harmonics are strong enough, they can interfere with the regular f-m commercial broadcasting stations transmitting at frequencies between 100 and 108 mc. Since amateur transmitters have no particular coverage area, they may be located near enough to an f-m receiver, so that field intensity of the second harmonic of this amateur signal (whether a.m. or f.m.) is strong enough to override the signal to noise ratio of the receiver and, hence, cause interference. That is, this undesired second harmonic signal can be so great in comparison with the desired f-m signal from the commercial station that the ratio between the desired to undesired signal is less than 2 to 1.

The ability of an f-m receiver to differentiate between the desired signal and interfering signals on the same or adjacent channels is of great advantage in providing more reliable reception over the complete service area of the transmitter. Investigation discloses that to prevent an f-m receiver from responding to an interfering signal, the desired signal need be only twice as strong as the interfering signal. Provided this condition is satisfied, the f-m receiver will reproduce only the stronger signal and completely eliminate the weaker signal.

QUESTIONS

CHAPTER 5

5- 1. Why is it important to have no phase distortion introduced in the transmitted f-m signal by the f-m transmitting antenna?

5- 2. *a.* What is meant by horizontal polarization of a radiated signal?
b. How should a dipole antenna be positioned for horizontal polarization of its radiated signal?

5- 3. *a.* To reduce the amount of radiated power in the vertical direction (that is toward the atmosphere and ground) are the elements or bays of an f-m broadcasting multielement antenna stacked vertically or horizontally apart from each other?
b. For a multielement f-m broadcasting antenna, what can be done to make the radiated signal more concentrated in the horizontal direction? Assume no change in the transmitter power output.

5- 4. *a.* If an antenna has a power gain of 5 and the power output from the transmitter equals 2.5 kw, will the radiated power from the antenna be 5×2.5, that is 12.5 kw? Explain your answer.
b. What is the antenna field gain when the power gain is 5?

5- 5. For a four-bay circular antenna, what is the angle of elevation from the horizontal for the vertical component of radiated signal at a point where the *relative* field intensity is 0.6?

5- 6. For a square-loop antenna employing ten loops separated from each other by 340 electrical degrees, what is the power gain of the antenna with respect to a half-wave dipole?

5- 7. In what form are the ionized layers of the ionsphere distributed?

5- 8. What is meant by the *critical frequency* of the sky wave and upon what does this frequency depend?

5- 9. Why is a-m broadcasting coverage greater during the night than during the day?

5-10. *a.* Define line of sight.
b. How can the line of sight between an f-m transmitting and receiving antenna be increased?

5-11. Why are there fewer a-m stations operating at night than in the daytime?

5-12. Can the greatest number of transmitting stations be employed in the a-m broadcast band or the f-m broadcast band? Why?

5-13. In f-m reception when must the signal strength ratio of the desired to undesired signals be at least 10 to 1 in order to prevent interference?

5-14. Under what conditions can an f-m signal be received outside its normal coverage area?

PART II

RECEPTION

CHAPTER 6

RECEIVING ANTENNAS

The second half of his book will deal primarily with f-m reception and receivers. Previous chapters have dealt with the underlying theory of f.m., f-m transmitters, and the transmission of f-m signals. This practical path was chosen as the one that would develop the most coherent picture of f.m. Consequently, the fundamentals of the different types of modulation were presented first and then the theory of f-m and p-m signals. Once these ideas were established, simple circuits generating f-m and p-m signals were discussed. Naturally following this was the discussion of the relative features of f-m transmitters, both from a theoretical viewpoint and in terms of those in actual use today for wide- and narrow-band f.m. The general discussion of the transmitter more or less followed the path of the signal, starting with the oscillator-modulator section and working forward to the power stages of the transmitter. To continue this progressive discussion, f-m transmitting antennas were discussed next. With the f-m signal at the antenna, the final topic in the analysis was the transmission of f-m signals as they were radiated from the transmitting antenna.

To follow the progress of the f-m signal, the next thing to discuss would be the reception of these f-m signals by the f-m receiver. Thus, this chapter will deal with f-m receiving antennas, and in the next chapter the f-m receiver will be analyzed in the same manner that the f-m transmitter was.

The Signal Pickup

Before going into the physical makeup of f-m antennas, some pertinent factors relative to the received signal should be known. In this respect f.m. simplifies the antenna problem, because the f-m receiver can discriminate against noise and other types of interference. It was mentioned previously that in a.m. the signal-to-noise ratio has to be

at least 100 to 1, but in f.m. the ratio need only be 2 to 1 for proper reception without interference. No matter what the interference — whether noise or an undesired a-m or f-m signal — a desired f-m signal that is twice as strong as the interfering signal is sufficient for proper reception. The only exception is in the case of an undesired f-m signal on the same carrier frequency; in this case, the ratio must be at least 10 to 1.

The first physical element in the receiving system that the f-m signal comes in contact with is the f-m receiving antenna. It has often been said that an f-m receiver is only as good as its antenna. But authorities have also held that a piece of wire will serve as an f-m antenna, or even that no antenna is needed. These contradictory statements arise from the fact that good reception of f.m. has been attained using just straight pieces of wire, and thus, the necessity of an f-m antenna is disputed. However, the only cases of such reception are of the particular kind where the f-m receiver happens to be located in a very favorable region with respect to some of the f-m broadcasting antennas. The signal strength is then relatively high and good reception may be obtained without the use of a normal f-m receiving antenna. In most other installations it has been shown that f-m reception is definitely improved with the proper type of antenna. At points which are a considerable distance from the transmitter, but within the service range of the transmitter, the signal pickup of a conventional single wire is usually so small that the signal-to-noise ratio is quite low and, consequently noise-free reception is not obtained. If you are in doubt whether to use an f-m antenna in your location and if you do not know too much about the surrounding terrain and where the f-m broadcasting antennas are located, then it is definitely advisable to use an f-m receiving antenna.

The nature of the transmitted f-m signal is a criterion in orienting the f-m receiving antenna to obtain sufficient signal pickup for proper reception. The transmitting antenna must employ horizontal polarization. This necessitates the orientation of the f-m receiving antenna in a horizontal position for maximum signal pickup from the passing f-m waves. More will be said later about the orientation of the f-m receiving antennas.

The antenna generally employed for f-m reception is a single half-wave dipole or some combination of half-wave dipoles. All types of f-m receiving antennas are designed to perform two main functions, namely, obtaining the necessary signal pickup and supplying an output impedance that can be properly matched to the receiver for maximum energy transfer. The different types of receiving antennas perform these functions in one manner or another, as will be seen later.

When we refer to a signal-to-noise ratio at the input to the f-m

antenna, the noise factor does not include any tube or thermal noise relative to the radio circuit. Actually, therefore, two noise components have to be taken into account when the f-m signal reaches the detector circuit of the receiver. One of the components results from the noises and interfering signals picked up directly by the f-m antenna, and the other is attributed to the inherent noise characteristics of the components within the receiver itself. Since it is difficult to reduce the inherent noise within the receiver, the best thing to do is either to reduce the noise pickup by the antenna system or to increase its signal pickup, so that the signal-to-noise ratio of the f-m signal just before the detector stage of the f-m receiver will be high.

To understand why a half-wave dipole is used as the basis of the f-m antenna, it is necessary to understand something about the voltage and current distribution, antenna resistances, resonance conditions, and the like with respect to such types of antennas.

Voltage and Current Distribution

In choosing the type of antenna for f-m reception, as well as other types of reception, the voltage and current distribution along the antenna must be known for an understanding of the reason a certain antenna is used. In this respect, let us examine the full-wavelength straight-wire antenna as seen in Fig. 6-1. The distribution is such that

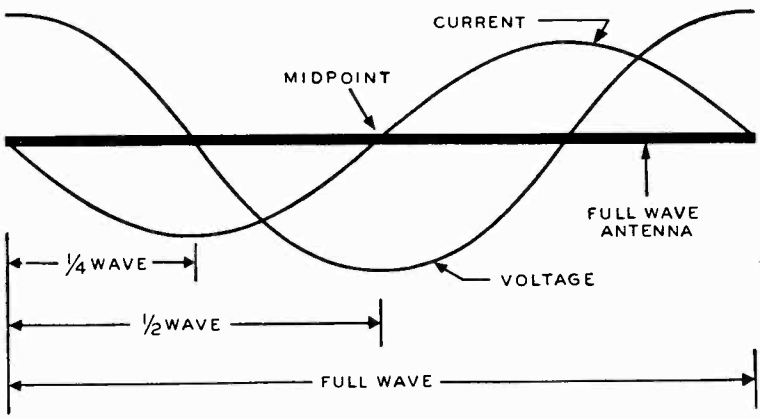

Fig. 6-1. A full-wavelength straight-wire antenna with standing current and voltage waves. Note that at the mid-point of the antenna the current is a minimum and the voltage a maximum.

at the ends of the wire the current is a minimum and the voltage a maximum. Due to certain characteristic phenomena of open wires used as antennas, such as that appearing in Fig. 6-1, *standing waves* of both voltage and current exist along these antennas. By standing waves is meant the following: A radio-frequency wave traveling to

the ends of the antenna will be reflected back to its starting point. The reflected wave will meet the original (so-called incident wave) in such a manner that the individual voltage and current curves of these waves will add algebraically such that voltage and current waves always exist on the antenna. These waves are referred to as *standing waves.* Antennas in general are referred to as radiating elements, or a series of such elements, and for the antenna to be a good radiating element (or receiving element), standing waves should exist on it.

Fig. 6-1 shows the standing wave distribution for a full-wavelength antenna. Distribution of the voltage and current is sinusoidal. Since the voltage and current are represented by sine waves, it is evident that they change polarity at certain points along the full-wavelength wire. The current is a maximum and the voltage zero at one-quarter of a wavelength from either end of the wire. Since the full wavelength of wire represents one complete cycle (360 degrees of electrical length of either voltage or current), the standing waves of voltage and current are said to be 90° out of phase. This 90° phase difference is the same as saying that the reversals of polarity of the voltage and current waves occur one-quarter of a wavelength apart.

The numerous qualities of an antenna apply to both transmitting and receiving antennas, so that those properties discussed under receiving antennas apply equally well to transmitting antennas and vice versa. Consequently, when we talk about the voltage and current distribution of the standing waves on one type of receiving antenna, it applies equally well to the same antenna when used for transmitting purposes.

However, the transmission line used with the antenna should have no standing waves on it, so that the line will not radiate any of the energy but rather transfer it to the receiver. If standing waves do exist on the transmission line, some of the energy picked up by the antenna will be lost from the line as this energy is transferred to the f-m receiver input. In order to make the transmission line a non-radiating element having no standing waves (that is, no reflection of the signal), the line must be terminated in its characteristic impedance. This means that the impedance of the transmission line must be properly matched to the impedance of the f-m receiving antenna and also to the input of the f-m receiver. The standing wave ratios quoted by antenna manufacturers include the loss introduced by the transmission line; the lower the standing wave ratio, therefore, the better the antenna and transmission line setup.

The Half-Wave Dipole Antenna

Let us now consider a half wavelength of wire or just half that in Fig. 6-1. This half-wave wire is illustrated in Fig. 6-2 and is generally representative of the current and voltage distribution of the half-

wave dipole antennas used with many f-m receivers. A half-wave antenna is often referred to as just a dipole antenna. The terminology (dipole) for these antennas has originated from the fact that voltage distribution along the half-wave antenna is such that at the ends of the antenna the voltages are of opposite polarity (that is, positive and negative charges). This is readily evidenced by the half cycle of voltage in Fig. 6-2. Since the half-wave dipole antenna is the basic type

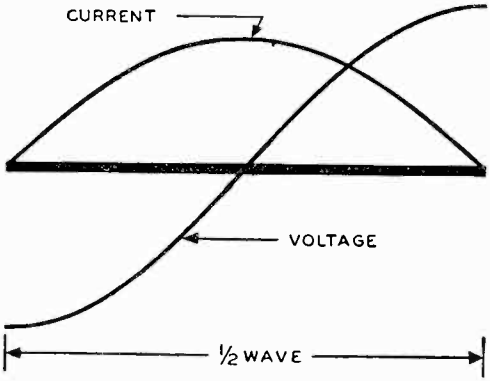

Fig. 6-2. The current and voltage distribution along a half-wave antenna. Note that at the ends the current is a minimum and the voltage a maximum. Compare with Fig. 6-1.

used in f-m receivers, let us examine some of its characteristics as shown in Fig. 6-2. At any one instant, the current standing wave is of the same polarity at all points, and there is, ideally, zero current at the antenna ends with maximum current, which is referred to as a current loop, at the center of the dipole at one-quarter of a wavelength from either end. The voltage changes polarity, and the change

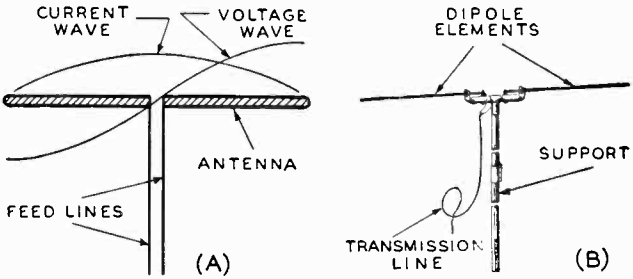

Courtesy Technical Appliance Corp.

Fig. 6-3. Current and voltage distribution in a half-wave dipole antenna (A). In (B) is shown a typical dipole antenna, its transmission line, and a method of support.

is such that there is, ideally, zero voltage at the center of the dipole, one-quarter wavelength from either end. At the ends of the dipole, the voltage is a maximum, but the voltage at one end is of opposite polarity to the voltage at the other end.

A drawing of a half-wave dipole antenna is illustrated in Fig. 6-3 (A) along with the waves of voltage and current distribution. In Fig. 6-3 (B) is a picture of a typical half-wave dipole antenna as used today. The half-wave dipole antennas illustrated are those that have center lead-ins and are termed *current-fed* antennas, because the feed-in lead is at a current loop or maximum. Half-wave antennas can also be end-fed, but f-m receiving antennas are center-fed dipoles. For proper reception, the half-wave dipole antenna should have a length *approximately* equal to one-half of a wavelength at the center frequency of the frequency spectrum it is to receive. Consequently, the length of each section should be about one-fourth of the wavelength of the middle frequency which the antenna is designed to receive.

Antenna Resistances

All the power input to a transmitting antenna is dissipated in one form or another. The so-called *resistances* of an antenna determine how this power is dissipated. Any antenna, whether it is used for receiving or transmitting, effectively contains two types of antenna resistance. One type is the usual ohmic resistance of the metal parts of the antenna, often called the *real resistance;* the other type is often called the imaginary or *radiation resistance.* In other words, we are concerned with two types of power, the power dissipated due to the actual ohmic resistance of the antenna and the power radiated from the antenna. The former power is readily understandable and, from this, the ohmic resistance is conceivable. The resistance dissipating the latter portion of the power is not, in reality, a physical resistance in the sense that the other one is and, hence, often is known as the imaginary or radiation resistance of an antenna. Consequently, when there is talk of power dissipation of an antenna, the I^2R total power loss should be understood to encompass both types of resistances. Resistance R is the series combination of the ohmic resistance of the antenna and the radiation resistance of the antenna.

In most types of antennas the ohmic resistance is much smaller than the radiation resistance, so that practically all the power is dissipated through the radiation resistance. For a half-wave dipole antenna in free space (that is, no intervening objects including ground effects, buildings, mountains, etc.) the radiation resistance is found to be equal to approximately 73 ohms. The actual value of radiation resistance of the simple dipoles, as used, varies somewhat away from 73 ohms, depending on the exact length of the dipole and presence of other physical factors.

Resonance and Impedance

The half-wave antenna behaves very much like a tuned circuit. The antenna has inductive, capacitive, and resistive components, but they are all distributed throughout the antenna in contrast to the lumped *L, C,* and *R* components in the regular tank circuit. The simple half-wave dipole antenna that is center tapped, behaves like a series reso-

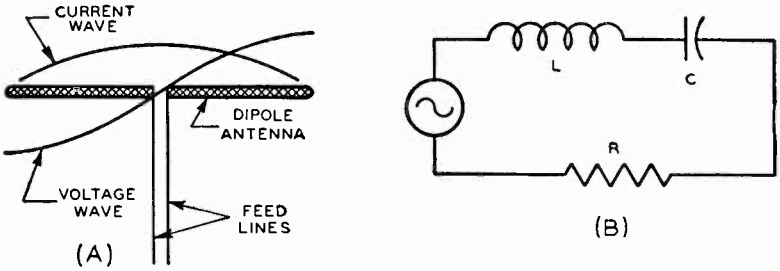

Fig. 6-4. A half-wave dipole antenna (A) and its equivalent series resonant circuit (B), where the resistive component *R* is primarily the radiation resistance of the antenna.

nant circuit. This is shown in Fig. 6-4 where *L, C,* and *R* represent the inductive, capacitive, and resistive components respectively. The resistive component is primarily the radiation resistance of the antenna since the real or ohmic resistance is relatively very small, even at the increased value it has at high frequencies.

If the dipole is approximately a half wavelength long, or about one-quarter wavelength on either side of the center tap, the antenna will act as a series resonant circuit to the frequency for which it is a half-wave antenna. In a series resonant circuit the impedance is a minimum and purely resistive, the current a maximum, and the voltage a minimum. This is also seen from Fig. 6-4 where, at the center point of the half-wave antenna, the current is a maximum and the voltage a minimum. At other points along the antenna the impedance is not purely resistive because it encompasses some reactance. This is due to the changing relationship of the voltage and current standing waves and, therefore, the impedance is greater away from the center point, being a maximum at either end of the half-wave antenna due to the minimum value of current and maximum value of voltage.

Impedance Matching

So that the maximum amount of energy pickup will be transferred from the half-wave antenna to the receiver input, the antenna has to be properly "impedance-matched" to the receiver input. A fair idea of impedance matching can be had from Fig. 6-5. Looking in the

direction of the input tube of the f-m receiver, through the primary of the input transformer, we see an impedance equal to Z_1; and looking in the direction of the transmission line and antenna, we see an impedance of Z_2, and for maximum energy transfer Z_1 should equal

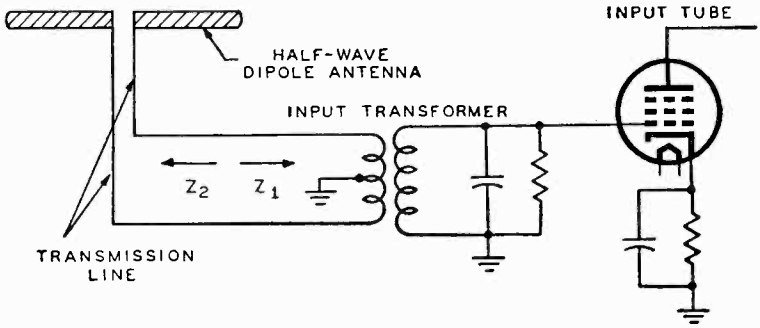

Fig. 6-5. In order to effect a maximum transfer of energy from the antenna to the control-grid of the r-f amplifier tube, the impedance Z_2 of the transmission line and antenna should equal the impedance Z_1 seen looking into the primary of the input transformer.

Z_2. Under this condition the maximum amount of energy possible, not *all* the energy, will be transferred from the antenna to the grid of the first tube. For the best match to occur, the transmission line should first be impedance matched to the antenna. Then these units through the medium of the receiver input transformer should be matched to the input impedance of the first tube. If there is any mismatch, there will be a loss of energy, and the maximum possible amount of energy will not be transferred.

As has been pointed out, the input impedance at the center of the half-wave dipole ideally is a pure resistance and equal to 73 ohms. In practice, this value of input impedance of the dipole can vary anywhere from 50 to 100 ohms as a result of such varying physical factors as the construction of the antenna, the obstacles near the antenna, and its height. A very simple impedance match to such an antenna is made by using a twisted-pair transmission line (usually, ordinary rubber-insulated wire) for the feeder section, as shown in Fig. 6-6. The so-called characteristic impedance of such a transmission line is somewhere around 75 ohms. If different types of wire are chosen for the twisted line, and if the physical hookups to the antenna can be varied somewhat, the impedance of this transmission line can be varied on either side of 75 ohms for the desired impedance match.

Beside giving a good impedance match, this type of line minimizes pickup by the lead-in due to the twisting effect and closeness of spacing between each individual wire, and thus noise pickup by the transmission line is reduced.

Where the antenna and line are properly matched, the input transformer of the receiver should have an impedance approximately equal to that of the line or antenna. For example, if the antenna resistance and characteristic impedance of the line are each about 100 ohms, then looking *into* the primary of the input transformer, toward the first tube of the receiver, the impedance seen should also be 100 ohms. Under these circumstances, the maximum amount of energy transfer will be made from antenna to receiver.

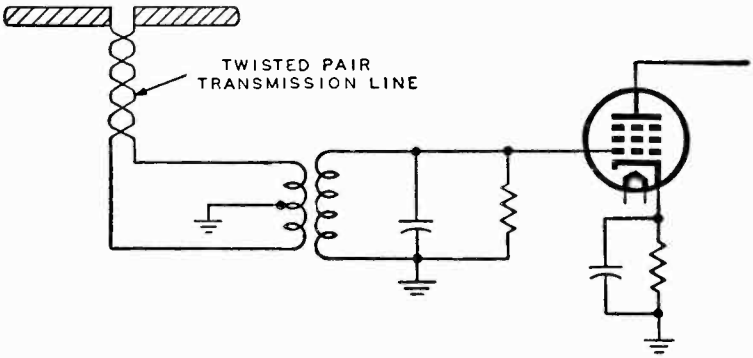

Fig. 6-6. In order to match the impedance of a half-wave dipole antenna with that of the transmission line, the latter can be formed of twisted pair, which has a characteristic impedance of approximately 75 ohms.

In reality, almost any good type of balanced transmission line, besides the simple twisted pair, can be used to match the antenna as long as the characteristic impedance of the line is close to the radiation resistance of the antenna. Many receivers use f-m antennas supplied by outside manufacturers; some receivers are not directly supplied with an f-m antenna, which must be bought separately. In the latter case knowledge of the input impedance of the receiver input transformer is necessary to secure the proper impedance match. Many f-m receivers today have an input impedance equal to about 300 ohms, so that the transmission line and antenna have to be properly matched to this 300-ohm impedance for proper energy transfer. Transmission lines with a characteristic impedance of 300 ohms would normally be used to match the line to the transformer, but the 300-ohm line would be mismatched to, for example, a 75-ohm simple half-wave dipole.

Some mismatch can be tolerated under certain conditions. First of all, let it be understood that for maximum efficiency the transmission

line should match the impedance of the antenna to the input impedance of the receiver. However, a certain amount of mismatch is allowable provided that satisfactory performance of the f-m receiver is obtained. Most f-m receivers are sensitive enough to suffer a certain amount of energy loss in the received signal and still operate satisfactorily. This means that if there is a small amount of impedance mismatch between the antenna and receiver there will be a certain amount of energy lost by the setting up of standing waves in the transmission line and if this loss is small, it can be tolerated. Even though mismatching by as high as a 4 to 1 ratio has resulted in so-called satisfactory receiver performance, this type of mismatch is definitely undesirable and should be avoided wherever possible. Since most antenna and transmission line manufacturers list the impedances of their products, it should be quite easy to obtain a match between the antenna and receiver. The difficulty in the complete matching process is in knowing the input impedance of the f-m receivers. We have stated that a great many of these receivers have an input impedance equal to approximately 300 ohms, but the impedance of some differs from this. Since very few receiver manufacturers list the input impedance of their sets, it is readily seen that it is difficult to effect a complete impedance match when normally it is necessary to guess the input impedance of the receiver.

If the mismatch is too great, there may not be enough signal input to the f-m receiver to overcome the inherent noise of the receiver. The signal-to-noise ratio will be low, and the reproduced audio signal will be noisy and incoherent.

It has been stated that for the best reception the line should be matched to the antenna. However, in many instances simple dipoles of 75-ohms input impedance have been used with 300-ohm transmission lines, yet the signal input to the f-m receiver has been enough for proper reception. With this mismatch of 4 to 1 the set still operates satisfactorily. Many f-m antenna manufacturing companies stipulate that, if a 300-ohm transmission line is used with their simple half-wave dipole antennas which have an input impedance around 75 ohms, proper reception will still be attained. Knowledge of the construction, the Q, and the impedance of the dipole is necessary to understand completely how such a mismatch can be tolerated.

The input of a simple dipole is, as mentioned, about 75 ohms and resistive in nature. This impedance varies from the center to either end, with the impedance at the ends being a maximum and somewhere in the vicinity of 2500 ohms. Since this is so, if the antenna can be tapped at some point away from the center, where the impedance is about 300 ohms, we have a good place to match a 300-ohm line. This procedure is somewhat impractical, but the same effect is obtained in another way. The 75-ohm impedance that appears at the

center of the dipole antenna is measured at the frequency for which the antenna is cut. On either side of this center frequency the impedance of the antenna at the center leads will increase — the amount of increase being determined by the frequency change. Thus an impedance mismatch of 4 to 1 for a 300-ohm line attached to a simple half-wave dipole antenna occurs only at the center frequency for which the antenna is cut; on either side of this frequency the impedance increases and, therefore, the impedance mismatch decreases. Therefore, for these off-resonance frequencies the dipole antenna does *not* create a 4-to-1 mismatch with a 300-ohm transmission line. However, this 4-to-1 mismatch still exists at the center frequency to which the antenna is cut, but if the antenna is cut to a frequency which has a relatively strong field in the vicinity of the antenna, the input signal may be strong enough to overcome the loss the mismatch entails and, hence, reception at this frequency may be satisfactory.

However, variations of the simple half-wave dipole antenna and variations in transmission line hookups exist, so that impedance matching can be closely attained. There are folded dipoles, dipoles wtih reflectors, folded dipoles with reflectors, specially constructed simple half-wave dipoles that change the effective radiation resistance, and other unique types of dipole arrangements. Analysis of some of these types of f-m receiving antennas is made later.

For any combination of transmission line and antenna, the smaller the length of the line, the less will be the line losses, no matter how well it is impedance matched. If the line *must* be long, due to the location of the antenna, low-loss transmission lines should be used to prevent excessive reduction in the signal reaching the receiver.

In conclusion, it may be said that, although correct impedance matching will give the best over-all performance, the primary purpose in most f-m antenna installations is to obtain the necessary voltage input to operate the receiver satisfactorily. This may be attained even though a mismatch exists.

Q of Antenna

The inductance and resistance of a straight piece of round wire will decrease, as the diameter of the wire increases. In other words, both L and R are inverse functions of the diameter of the wire. However, at operating frequencies of about 100 mc for the f-m band, the inductance decreases at a faster rate than the resistance for changes in diameter.

Since the Q of a circuit or a wire may be defined as the ratio of inductive reactance to resistance, the Q of the dipole is seen to *decrease* as its diameter increases. This is due to the fact that the inductance and, hence, the inductive reactance decreases at a much faster rate than the resistance as a result of the diameter increase.

This is the same as saying that the resistance effectively increases with respect to the inductive reactance. Consequently, it can be said that the Q of a dipole antenna is an inverse function of its diameter. The inductive reactance, and hence the Q of a wire, increases with increase in wire *length,* but for the foregoing analysis of the Q of an antenna the length of the dipole, as well as the frequency of operation, is considered constant. The lower the number of wire used for the dipole, the greater will be the diameter and hence the lower the Q.

Since the f-m band is quite wide, the f-m antenna should have as broad a response as possible, in order to receive all the signals with little or no discrimination. By lowering the Q of the antenna it is possible to secure a fairly broad-band characteristic. However, since a reduction in Q "flattens" out the response characteristic, there is also a reduction in signal pickup. Consequently, a compromise has to be effected between the tolerable loss in signal pickup and the reduction in Q.

The Folded Dipole

The folded dipole antenna has a great advantage over the simple dipole antenna in that it exhibits a much higher impedance, thus allowing for a better impedance match to receivers having 300-ohm inputs. In effect a folded dipole is the simple half-wave antenna illustrated in Fig. 6-3 (A) with another half-wave antenna section joined to it at the ends. A typical folded dipole is shown in Fig. 6-7. From this drawing the folded dipole is seen to be about a full wave-

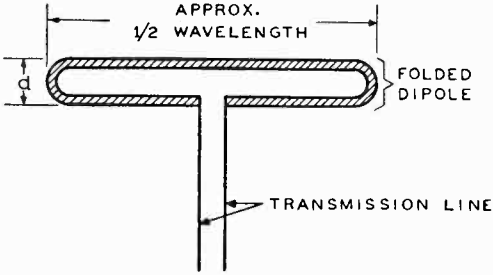

Fig. 6-7. A folded half-wave dipole antenna, where d, the distance between the two half-wave sections, is small in comparison to the wavelength.

length of wire (or appropriate tubing or rod) bent so that it takes on approximately the shape shown in Fig. 6-7. In Fig. 6-8 are shown three typical folded-dipole f-m antennas as used today. Those shown in parts (A) and (B) are typical outdoor folded dipoles, while that shown in part (C), although suitable for outdoor use (with proper

mechanical support), is especially useful as an indoor antenna. This latter antenna can be placed under a rug, in a closet, or some other convenient place in the home. It is made completely out of 300-ohm twin-lead transmission line, and can be simply constructed, as follows:

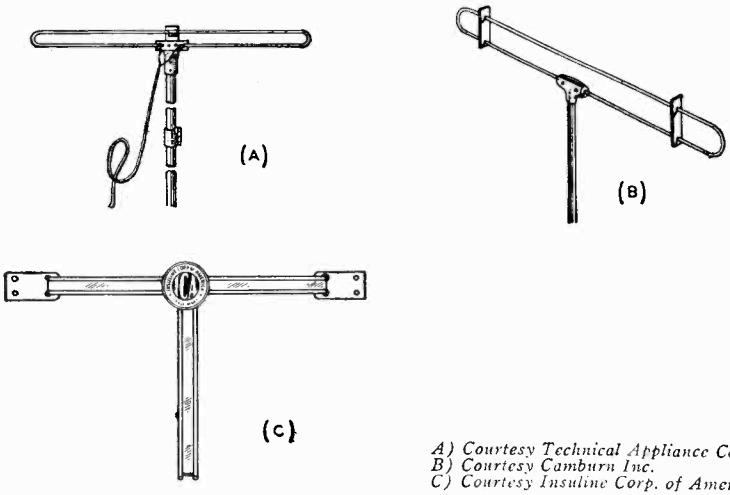

A) Courtesy Technical Appliance Corp.
B) Courtesy Camburn Inc.
C) Courtesy Insuline Corp. of America

Fig. 6-8. Three types of folded dipole antennas. Those illustrated in (A) and (B) are for outdoor use and that in (C) is for indoor or outdoor use.

Take about five feet of 300-ohm twin-lead transmission line and strip away some of the plastic insulator from the ends. Next, twist together and solder the two bare leads on each end, as shown in Fig. 6-9. Then center cut one lead of the twin line and strip away the insulation from each cut end to half the distance between the parallel wires of the transmission line. Finally bend these two bare pieces of wire at right angles at the beginning of the insulator. This part of the antenna represents the folded dipole. Next, take another piece of the 300-ohm twin lead and strip off some of the plastic insulator at one end, so that the two twin leads are bare. This latter twin lead represents the transmission line, and it is usually any length that will make its wiring to the receiver input most convenient, but the shorter the better. Solder these two bare leads to those of the center part of the folded dipole as shown in Fig. 6-9.

Let us now return to a study of the folded dipole in general and see how this type of antenna increases the input impedance compared with a simple half-wave antenna. The folded dipole is similar to an autotransformer where the primary of the transformer is analogous to that part of the folded dipole which has the transmission line attached to it and the secondary of the transformer is analogous to the other half-wave section of the folded dipole. Accordingly it is

readily seen that a mutual impedance exists between both half-wave sections of the folded dipole in the same way that mutual inductance exists between the windings of a transformer.

Each individual half-wave section of the folded dipole is considered as a resonant half-wave antenna and fundamentally resistive at the resonant frequency. This is the same as having both the primary and secondary of the transformer tuned to the same resonant frequency in which the impedance of each will be resistive in nature.

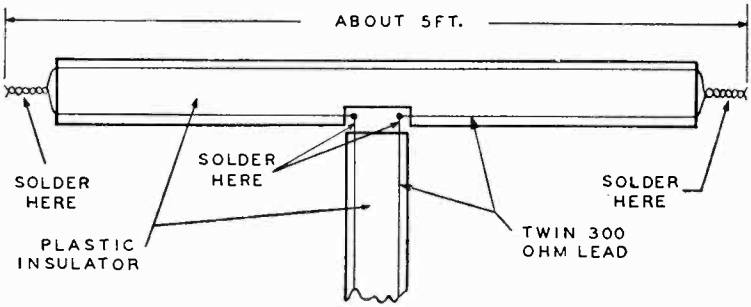

Fig. 6-9. Constructional details of a folded dipole antenna made from a 300-ohm twin-lead transmission line.

This means that looking into the tapped portion of the folded dipole the complete impedance seen is the sum of the tapped half-wave section plus the *reflected impedance* from the other half-wave section. Reflected impedance means that, because of mutual impedance between both half-wave sections of the folded dipole, the effective impedance of the primary is changed. This reflected impedance is mathematically equal to the square of the mutual impedance (which is purely reactive in nature) divided by the impedance of the untapped half-wave section. When multiplying the mutual reactance by itself, the result is a purely resistive component, and since the impedance of the untapped half-wave section of the folded dipole is resistive (at resonance), the reflected impedance is, also, effectively resistive. Since the impedance of the tapped half-wave section is also resistive, then the total input impedance of the complete antenna system, as seen from the feed-in half-wave section, under the above conditions of resonance, is resistive.

Since the distance d separating the two half-wave sections of the folded dipole is much smaller than the half-wave length of the antenna, the mutual impedance is considered to approach the maximum possible value. In other words, using the analogy of the transformer again, the coefficient of coupling of the half-wave sections of the folded dipole is said to be approximately unity. Since each individual half-wave section has its own so-called self-impedance, similar to the

self-inductance of the windings of a transformer, the total *self-impedance* of both sections (since they are connected) is equal to the sum of their individual self-impedances. The total self-impedance of the folded dipole is not the *complete* impedance, because the folded dipole antenna impedance as a whole takes into account the mutual impedance as well as the total self-impedance. The wire, rod, or tubing used for both half-wave sections is usually made of the same material, so that the self-impedance of both half-wave sections are about the same, neglecting the small difference caused by the slight spacing of the feed-in section of the half-wave element that has the transmission line attached.

For an autotransformer wired in *series aiding,* the total inductance of the unit is equal to the sum of the individual self-inductances *plus twice* the value of the mutual inductance. If the individual self-inductances are equal and if the coefficient of coupling is unity, the value of the mutual inductance will be the same as either self-inductance. Under these circumstances, the total inductance of the autotransformer is equal to four times the self-inductance of one part of the winding.

The same is true, for the most part, of the folded dipole. The individual self-impedances of the half-wave sections are about equal, and the coefficient of coupling between these sections is considered to be unity, so that the mutual impedance is the same as either individual self-impedance. The total input impedance for the folded dipole is, therefore, the sum of the individual self-impedance plus twice the mutual impedance. Consequently, the total input impedance of the folded dipole is equal to four times the value of either self-impedance. For the half-wave folded dipole these impedances are resistive, as previously mentioned, and, thus, the total input resistance of the folded dipole is equal to four times the input resistance of a single half-wave section of the folded dipole. Since a simple half-wave dipole antenna has approximately the same input resistance as a single half-wave section of the folded dipole, the input resistance of a folded dipole is about four times as great as that for a simple half-wave dipole.

Under ideal conditions the input resistance of a half-wave dipole is equal to about 75 ohms. So that under similar conditions the input resistance of the folded dipole is equal to 4×75 or 300 ohms. Thus for f-m receivers having a 300-ohm input impedance a 300-ohm transmission line can be used to match the folded dipole to the receiver for maximum energy transfer.

Orientation of F-M Receiving Antennas

As mentioned previously, according to FCC regulations the f-m broadcasting antenna has to be horizontally polarized. In special cases

the FCC allows polarization in other than the horizontal plane, but these are few in number. Where such a transmitting station exists, the receiving antenna should be oriented in a slanting or diagonal manner, so that both horizontally and vertically polarized signals can be picked up.

Horizontal polarization is more favorable than vertical polarization, because certain interference phenomena, such as ignition interference, are often polarized very strongly in the vertical direction. Consequently, the horizontal polarization provides a better signal-to-noise ratio, that is, helps the antenna discriminate against noise in favor of the signal pickup.

In horizontal polarization, the electric field (the electric lines of force) of the transmitted signal is parallel to the ground or horizontal. The use of horizontal polarization reduces the effects of the atmospheric layers which attenuate the high-frequency signals used in f-m broadcasting. Because of the horizontal polarization of the radiated f-m signals, the radiating elements of the f-m receiving antenna must be in a position to receive the maximum possible signal pickup. Most f-m receiving antennas, especially in installations containing dipole elements, are so oriented that the radiating elements are horizontally situated.

To receive the maximum adequate signal from the directive antennas, the dipole receiving antenna should be oriented at right angles to the direction of the f-m transmitting antenna. Since a number of f-m stations, located in different places, cover the same area, the amount of signal pickup by the receiver antenna will differ for each f-m station. The receiving antenna should be placed broadside to the directed rays of the transmitting antenna for which the signal pickup is weakest. The receiving antenna thus serves its most useful purpose in trying to obtain equalized signal pickup as nearly as possible for all of the f-m stations in its area.

Dipole with a Reflector

In many localities the f-m signal pickup required for proper reception is greater than that obtainable with a half-wave dipole or folded dipole antenna alone, so that something has to be done to increase the signal pickup. This is especially necessary when the receiver is located at a great distance away from the transmitting antennas. Since the signal surrounds the antenna, it is easily realized that signal energy exists at points other than the immediate vicinity of the dipole itself. This leads to the idea that, if some of this signal energy from the surrounding area could be directed toward the antenna, the antenna would effectively have a greater signal input.

To increase this signal pickup effectively, the antenna employed is

equipped with a "reflector" element. This is shown in Fig. 6-10 where a simple half-wave dipole is shown and placed behind this dipole, in the same plane as the dipole, is the reflector element. This reflector conductor is usually of the same material as the dipole itself, and mathematically it should be slightly longer than one-half wavelength. The reflector should be placed on the side of the receiving antenna *away* from the transmitting antenna from which the signal is to be

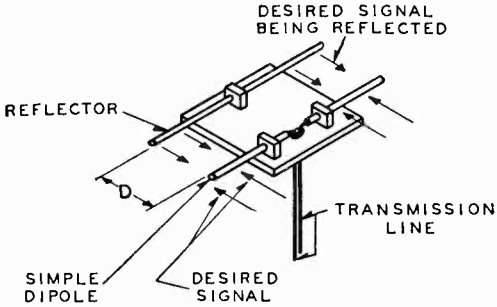

Fig. 6-10. In order to increase the pickup, a reflector element is placed behind the dipole in the same plane at a distance *D*, that is between one-tenth and one-quarter of the wavelength for which the dipole is cut.

received. This means that the desired signal will be approaching the antenna dipole in the direction indicated in Fig. 6-10. That part of the signal that passes the dipole and hits the reflector conductor will be reflected back to be picked up by the dipole.

The distance *D* that the reflector is spaced from the dipole is a factor in the amount of increased signal pickup, and it is usually somewhere from one-tenth to one-quarter of a wavelength away from the feed-in dipole element. Most manufacturers specify the spacing in their service instructions accompanying the antenna. This is to make sure that the reflected signal picked up by the receiving dipole is *aiding* the signal directly picked up by the same dipole, so that the maximum possible total energy pickup is available.

The way in which the signal is increased can also be compared with transformer action. A certain amount of mutual impedance exists between the dipole and reflector, determined primarily by the distance separating the elements and the self-impedance of the elements. In brief, when the signal hits the reflector, a voltage is induced which causes a coresponding current to flow in the reflector. This reflector current, by analogous transformer action, induces a voltage into the lead-in dipole element, the magnitude depending upon the mutual impedance and the phase relation of the voltage depending upon the spacings between the elements, which is often one-quarter wavelength. Thus, it is seen how a receiver antenna with a reflector can have an effective increase in signal pickup over a half-wave antenna without a reflector.

Since a mutual impedance exists between the elements and since the signal pickup is increased, the effective input impedance is altered. The exact value of the change in the antenna's input impedance depends upon the degree of coupling, the value of mutual impedance between the elements and, hence, the amount of reflected impedance. When used with a simple half-wave dipole or folded dipole, the reflector usually decreases the input impedance, so that, besides increasing the signal pickup, the reflector can change the input impedance to, perhaps, a better impedance match from the antenna to the receiver.

When used with a reflector, half-wave antennas become unidirectional (that is, become more directional to signal pickup in *one* direction than any other) in that there is little signal pickup from the reflector side of the arrangement.

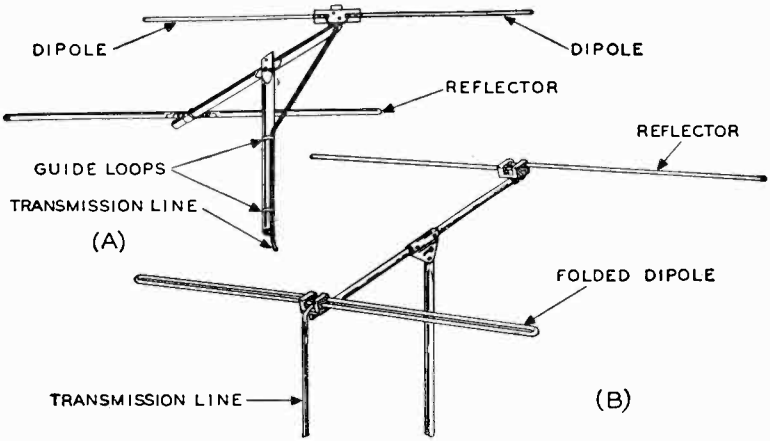

A) Courtesy Insuline Corp. of America
B) Courtesy American Phenolic Corp.

Fig. 6-11. Reflector elements are used not only with simple dipole antennas (A), but also with folded dipoles, as shown in (B).

In Fig. 6-11 are illustrated some typical f-m receiving antennas as used today. In part (A) the reflector is used with a simple half-wave dipole element and in part (B) the reflector element is used with a folded dipole element.

Since the reflector increases the signal pickup of the dipole element, it is customary to state how much this signal pickup is increased over the dipole element alone by so many decibels gain. Consequently, the reflector element is said to add so much decibel gain to the antenna.

Length of the Half-Wave Antenna

Throughout this chapter we have constantly used such nomenclature as the length of the dipole being a half wavelength long. This was all

preliminary to solving the problems of the actual physical length of the antenna and why a particular length is chosen. If only one frequency is going to be picked up (that is, for a fixed frequency f-m receiver), the antenna length is easy to calculate and is based on that signal frequency. However, we are mostly concerned with f-m broadcast receivers and the f-m broadcast band of today is between 88 and 108 mc, so the antenna length has to be chosen so that it will be responsive to all frequencies in this band. Since in many instances some transmitting signals are much stronger than others, the design length should favor the weaker stations. For most practical purposes, however, the half wavelength of the antenna is designed for the center frequency of the band of frequencies it is to receive. This means that for the complete f-m broadcast band, the design of the dipole antenna is made at 98 mc.

It is known that a 10-meter wavelength means a frequency of 30 mc, but the simple formula telling how this is brought about is often forgotten. The wavelength of a specific frequency is found by dividing this frequency into the *velocity of radio waves.*[1] The velocity of radio waves is equal to 300,000,000 meters per second, and thus with the frequency, f, in cycles per second, the wavelength, in meters, is given by the following:

$$Wavelength = \frac{300{,}000{,}000}{f} \text{ in meters}$$

This is for one full wavelength. If we change the units of this formula and divide the right hand side by 2, we will find that

$$L = \frac{492}{f\ (\text{mc})} \text{ in feet}$$

or

$$L = \frac{5904}{f\ (\text{mc})} \text{ in inches}$$

where L is equal to the length of a *half wavelength* in free space and f is the frequency in megacycles per second.

In half-wave antennas, a so-called "end effect" is attributable to the material supporting the antenna and other physical considerations which makes the electrical length of a half wavelength antenna effectively longer than the physical length. To make sure that the electrical length of the antenna used is *effectively* one-half wavelength long, the actual physical length is made less than that for a

[1]Many sources in establishing the wavelength of radio waves state that the frequency of the wave is divided into the velocity of *light*. However, since both light waves and radio waves are electromagnetic waves, they basically travel at the same velocity, namely 300,000,000 meters per second. Hence, in the above problem we have omitted the reference to the velocity of light.

half wave in free space which has no end effects. The electrical length of the antenna increases with increase in frequency, because the end effect also is increased. From about 5 to 30 mc, the physical length of the half-wave antenna should be reduced by about five percent to make it effectively operate as a half-wave antenna. Since the frequency of operation of the f-m band of today has a center frequency of about 100 mc, the effective length would increase further, which means that the physical length should be reduced by more than five percent. For most practical purposes at these f-m frequencies, the physical length of the half-wave antenna should be reduced by about 7.5 percent. This means that the preceding formulas have to be multiplied by 92.5 percent to give the correct effective half wavelength. Thus,

$$L = \frac{492 \times .925}{f\ (\text{mc})} = \frac{455}{f\ (\text{mc})} \text{ in feet}$$

or

$$L = \frac{5904 \times .925}{f\ (\text{mc})} = \frac{5460}{f\ (\text{mc})} \text{ in inches}$$

where L is equal to the effective length of a *half-wave antenna.*

For most center lead-in half-wave antennas each half of the dipole is approximately equal to half the values of L found in the foregoing formulas.

For instance, in the f-m broadcast band the center frequency is 98 mc. This means that the length of the half-wave dipole antenna should be as follows:

$$L = \frac{455}{98} = 4.64 \text{ feet}$$

or

$$L = \frac{5460}{98} = 55.7 \text{ inches.}$$

Since each section of the dipole is *effectively* a quarter wavelength long, the actual physical length is 4.64/2 or 2.32 feet, or 55.7/2 or 27.85 inches long. However, due to the gap in the lead-in dipole for the transmission line, the actual physical lengths of the individual sections of the dipole are somewhat less than calculated.

There are many variations of frequency for which these f-m receiving antennas are designed. To understand why these variations exist, something about the f-m frequency band has to be known. It was stated the f-m frequencies on the new f-m band are between 88 and 108 mc. These frequencies are subdivided into three sections. Between 88 and 92 mc, the f-m band is allotted to educational f-m broadcasting; between 92 and 106 mc, the f-m band is allocated to commercial f-m broadcasting; and between 106 and 108 mc, the band is for facsimile.

Some manufacturers cut their antennas for the complete f-m band — that is, to receive 88-to-108-mc f-m signals with 98 mc as the center frequency. Many other manufacturers stress the importance of the commercial f-m section of the f-m band by designing their antennas for the 92-to-106-mc region. For the latter type, the center frequency would be 99 mc, and, consequently, the antennas would be designed so that they are cut to an effective half wavelength at this center frequency.

Maximum Voltage Input

It is well known that a maximum voltage input to the receiver is desired, but the feed-in to the simple half-wave dipole antenna or folded dipole is center driven and at this point the *current* is effectively at a *maximum*. How, then, can we conceive of a maximum voltage to the first f-m tube? There are numerous ways of explaining this, one of which follows:

In Fig. 6-12 a dipole antenna and input circuit to an f-m receiver is illustrated along with the current and voltage curves effective at the

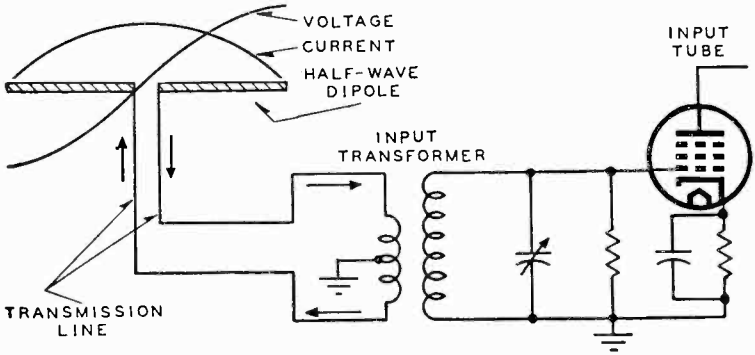

Fig. 6-12. Half-wave dipole and input circuit to the r-f amplifier. The arrows indicate the current flow, which being a maximum in the transformer primary, induces a maximum voltage in the secondary at the frequency of operation.

dipole. Since the center point of the antenna is at the loop of the current curve, a maximum amount of current will flow through the primary of the input transformer. This maximum amount of current sets up a maximum magnetic field which causes a maximum voltage across the secondary due to induction. Since the parallel tuned secondary circuit is resonant at the frequency of operation, maximum voltage is developed at this desired frequency, which is applied to the grid of the input tube.

Noise Reduction

In many f-m antenna systems, the primary of the input transformer has its center point grounded to reduce noise interference through the medium of the transmission line. This was illustrated in Fig. 6-12, but the left-hand side of this figure is redrawn in Fig. 6-13, to make this

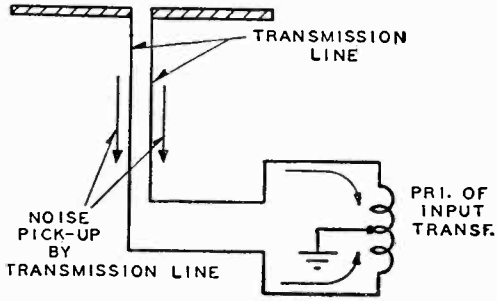

Fig. 6-13. In order to reduce noise pickup through the medium of the transmission line, the center of the primary winding of the r-f transformer is grounded. This increases the signal-to-noise ratio at the input of the receiver.

system of noise reduction somewhat clearer. Since the transmission line used may cover a greater area than the antenna itself, it has a tendency to pick up noise voltages, especially if the transmission line is quite long. To reduce this noise pickup and, hence, increase the signal-to-noise ratio at the input to the f-m receiver, the center tap of the primary is grounded. It reduces noise pickup in the following manner:

The noise signal, when it hits the transmission line, induces equal voltages in each lead of the transmission line which in turn produces noise currents that flow in the same direction in the transmission line as indicated in Fig. 6-13. By center tapping the primary of the input transformer to ground, this circuit becomes symmetrical, and the noise currents both flow toward this ground connection. This effectively makes the individual currents out of phase, and, since they are equal in magnitude, they produce magnetic fields which cancel each other and, hence, the total noise voltage induced in the secondary of the input transformer is virtually zero.

This reduction in noise pickup is only in reference to that picked up by the transmission line and not that noise picked up by the dipole itself. This latter noise, as well as the desired signal input, finds its way into the receiver, but this noise is small and, if it just changes the amplitude of the received signal, the f-m receiver will take care of these amplitude variations in the f-m signal by either limiting these variations or not responding to them at all.

Other F-M Receiving Antennas

So far in the analysis of f-m receiving antennas, we have dealt *primarily* with simple and folded dipole antennas with and without reflectors, because they are the types that are most universally used. There are, however, numerous other types of antennas used for the reception of f-m signals. Since these different types are quite numerous, we are going to analyze only two of these other f-m antennas. The two types chosen are unique in the field of f-m receiver antenna design, as the idea behind their development is supposedly to achieve better signal pickup than is obtained with the types so far discussed. The design principles and theory involved have already been discussed in general form as applicable to all antennas.

We have to understand a few facts about the economics involved in the design of f-m antennas. Usually, if more time and equipment is put into the design of an f-m antenna, the price will be high compared with other antennas. In other words, the radio set buyer, or even the radio manufacturer buying f-m antennas, is often faced with limitations on how much he can economically afford to spend on f-m antennas. Therefore, most antenna manufacturing companies refer to the electrical advantages or superiority of their product in respect to their price. They are trying to be as fair as possible to the public in establishing what they believe to be an honest account for what they have put into the antenna in the form of engineering design as well as material things. Thus the f-m antenna field contains numerous manufacturers of the same type of antenna with approximately the same price and electrical specifications.

As in all fields, the trend in f-m antenna design is to surpass in electrical performance what is already in the field. With this purpose there have been numerous types of f-m antennas on the market, some of them of different design to be used in specially located areas with respect to the transmitter and others that are *intended* for over-all betterment of performance. The two antennas chosen here are unique in design and new in the field. According to specifications laid down by the manufacturers, the relative performance of these antennas can be checked against those previously discussed, and conclusions can be simply drawn for comparison purposes.

Dipole With a Director

In a previous section of this chapter we analyzed the effects of using a half-wave antenna with a reflector, and indicated how the signal pickup by the antenna was increased due to this reflector unit. These types of antennas are more or less fixed in position once the established point of assembly is chosen. It is, therefore, very cumbersome to vary the position of the antenna to increase the pickup of certain signals which are weak in strength.

To accomplish the effects of increase in gain similar to that allowed by the reflector and, also, have the position of the antenna elements variable without appreciably affecting the input impedance to the antenna, a unique design is used. Shur-Antenna-Mount, Inc., incorporates in an antenna design called the "Interceptor" the use of a *director* instead of a reflector in conjunction with a simple dipole element, to accomplish these afore-mentioned favorable conditions. A director is a term given to an antenna parasitic[2] element that is oriented in the direction of the signal to be received.

If the spacing between a two-element antenna (dipole with reflector or dipole with director) can be varied, we have a ready means of somewhat changing the position of the antenna elements to afford the best possible signal pickup. In this manner the degree of directivity can be adjusted to give the best reception from the various f-m transmitters within range. However, in order to maintain the impedance match to the transmission line, the reflected impedance, and hence the total input impedance, should be kept as constant as possible. The

[2]A parasitic antenna element is one that has no transmission line attached to it and that provides for added directional characteristics to the so-called driven element.

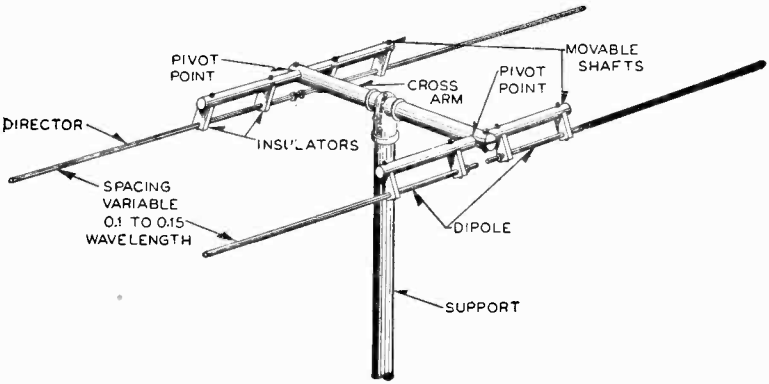

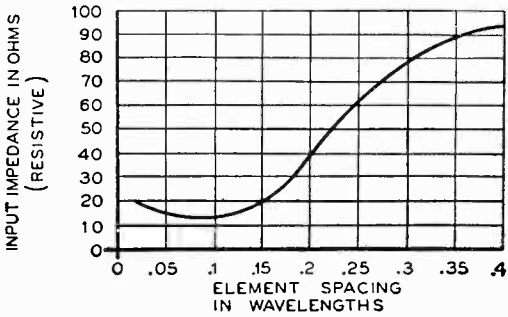

Fig. 6-14, above, Fig. 6-15, below. How the director is installed in an array with respect to the dipole is shown in Fig. 6-14. The curve below shows how the input resistive impedance varies with element spacing in wavelength.

Courtesy Shur-Antenna-Mount, Inc.

usual spacing between the elements of a dipole with a reflector is about one quarter wavelength of the center frequency to which the dipole is cut. According to this approximate spacing, the input impedance is equal to approximately 75 ohms. Assume for the moment that the spacing is 0.2 of a wavelength long at 99 mc and that the input impedance measured is equal to about 40 ohms. If the spacing is varied to one-quarter wavelength, the input impedance will vary and may be increased by 20 ohms, or more, and, consequently, the impedance match originally established at 40 ohms will not be maintained. Even though the actual field strength pickup by the dipole element may not change, the mismatch will cause a loss in the line, and less input will be effective at the receiver.

The use of a director placed a certain distance away from the dipole affords approximately the same field strength pickup by the dipole when it is varied by 0.05 of a wavelength as the use of a reflector. It also keeps the input impedance of the system practically constant. To be more exact, the antenna system under discussion, as illustrated in Fig. 6-14, can have its spacing varied between 0.1 and 0.15 wavelength, and yet the input impedance will remain substantially constant. The curve of Fig. 6-15 shows how the input impedance (which is resistive) varies with respect to wavelength. At 0.1 of a wavelength the input impedance is seen to be equal to about 14 ohms, and at 0.15 wavelength the impedance is only about 20 ohms. This means that in this range of spacing the input impedance changes by only about 6 ohms. With the transmission line used, it is matched to the 14 ohms at its minimum spacing. However, if the spacing is varied by moving the elements over or under the *crossarm* (see Fig. 6-14), the input impedance will change slightly, being at the most about 6 ohms higher at the maximum spacing allowable. This means that the impedance match originally made changes very little, so that the slight mismatch that does occur will cause only a minute loss. Therefore, the elements can be varied either over or under the crossarm, so that the pattern of reception can be altered.

We have mentioned that the transmission line used with this antenna is supposed to match an input impedance of about 14 ohms, but as yet we do not know how this match is brought about with respect to the type of line used and the input impedance of the f-m receiver. We intend to show this now. The impedance match to be discussed is based on a 300-ohm input impedance for f-m receivers.

Since the transmission lines available do not have a characteristic impedance as low as 14 ohms, a special matching section between the antenna and transmission line is needed. Transformers of the proper design can accomplish this very well, but they are an expensive item. In general, transmission lines, if cut to certain lengths at the frequency of operation, can act as transformers and be used successfully as well

as economically for matching purposes. To determine the type of transmission line to be used as the *matching lead,* two things must be known; the impedance of the antenna and the characteristic impedance of the transmission line that is being used with the receiver. A piece of transmission line *approximately* a quarter wavelength long at the frequency of operation, provides a quick method of impedance matching. For instance, in Fig. 6-16 a matching lead (about a quarter wavelength) having a characteristic impedance equal to Z_3 is being

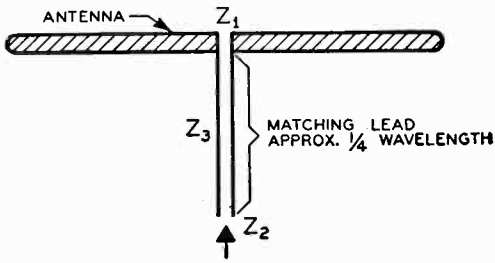

Fig. 6-16. A matching lead supplying an impedance Z_3 that matches the antenna or source impedance Z_1 to the load impedance Z_2.

used to match the antenna impedance (or source impedance) of Z_1 to the load impedance Z_2. The impedance seen looking into the matching lead is equal to Z_2, and by simple mathematics the impedance of the matching lead is given by the following:

$$Z_3 = \sqrt{(Z_1) \times (Z_2)}$$

If the antenna impedance is 14 ohms and if 300-ohm transmission line is to be used to match the receiver input (usually 300 ohms), we can compute Z_3. Thus:

$$Z_3 = \sqrt{(14) \times (300)} = \sqrt{4200} = 64.8 \text{ ohms}$$

From this result, we find that the impedance of the matching unit should be 64.8 ohms. Transmission line of this impedance is not commercially supplied, and the one nearest to it has to be used, which means that a 75-ohm transmission would have to be used for this match. As a result of this slight discrepancy, the length of the matching section instead of being an ideal one quarter wavelength long is somewhat shorter. For the "interceptor" antenna discussed here, the frequency to which the antenna is cut is equal to 98.75 mc, and one quarter of a wavelength at this frequency would be $2952/f$ (mc) electrical inches long. However, this value is multiplied by 0.69 to obtain the physical length of the 75-ohm matching section. Thus:

$$L = \frac{2952}{98.75} \times 0.69 = 20.63 \text{ inches}$$

and the length of the 75-ohm matching section is 20.63 inches (or 20⅝ inches) long.[3]

[3]The figure 0.69 is obtained from the manufacturer's data and takes into account the velocity of propagation in the matching section.

It should be remembered that a parasitic element, when used as a director, should be oriented toward the desired signal to be received.

Omnidirectional F-M Antenna

All the antennas discussed so far were either unidirectional or bidirectional. That is, the antenna could receive signals in only one or two directions. The simple dipole or folded dipole antenna is bidirectional because it can receive signals from two directions. The dipole antennas with reflectors receive signals from one direction only, because signals on the reflector side of the arrangement are prevented by the reflector from being picked up by the dipole element.

Other types of f-m receiving antenna arrangements make use of signals from all directions; such antennas are called *omnidirectional.* It is readily conceivable that an antenna arrangement that makes use of signals from all directions will respond to more signals than antennas that are directional in character. One of the most important advantages of such an antenna is that it does not have to be oriented in any one direction since it can receive signals from all directions.

One such antenna, manufactured by the Wind Turbine Company of West Chester, Pa., appears to be simply one bay of the turnstile antenna used for f-m transmission. This f-m receiving antenna makes use of the Brown developed coaxial radiator as used in the original turnstile antenna, resulting in a good impedance match to the transmission line over a broad band of frequencies. By the use of coaxial radiators for the antenna elements the impedance of the over-all antenna can be adjusted through a varying range of resistive values, so that impedance matching to the necessary transmission line can be attained. It should be remembered that in the analysis to follow the characteristics of this antenna are the same when used for the transmission of f-m signals as well as for their reception.

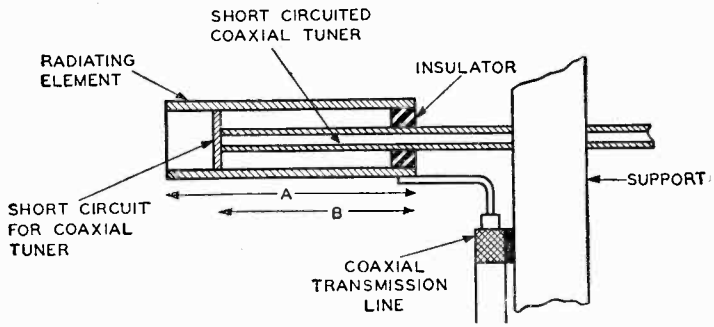

Courtesy Wind Turbine Co.

Fig. 6-17. A cross-sectional view of a typical coaxial radiator. By varying the radiating element of length *A* along the length of the coaxial tuner any reactance of the radiating element can be tuned out by the reactance of the opposite sign of the coaxial tuner.

A cross section of a typical coaxial radiator is shown in Fig. 6-17. It essentially consists of a hollow radiating element of length A into which is inserted a short-circuited coaxial tuner of effective length B. By varying the radiating element along the length of the coaxial tuner any reactance of the radiating element can be tuned out by the reactance of the opposite sign of the coaxial tuner of length B. Two of the radiators shown in Fig. 6-17 form a dipole element with the input impedance of the dipole a pure resistance due to the canceling of the reactances of the radiating element and the tuner. A cross sectional view of such a dipole element is shown in Fig. 6-18 with the coaxial tuner common to both radiator elements. Each radiator element has a separate coaxial transmission line feed point.

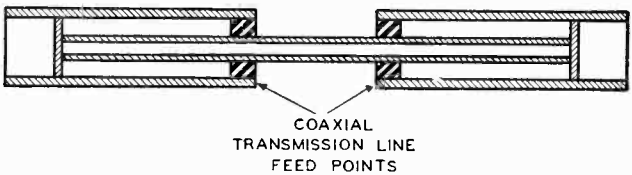

Courtesy Wind Turbine Co.

Fig. 6-18. Dipole element consisting of two coaxial radiators with the coaxial tuner common to both elements.

When omnidirectional characteristics are desired in the horizontal plane, as is the case for f-m signals, two such dipole arrangements are placed at right angles to each other. That is, both dipoles have their center coaxial tuning elements perpendicular to each other. Due to the arrangement of the antenna system the voltage received by one dipole element is 90° out of phase with the other. Since the dipole elements are at right angles to each other it is common terminology to call one the east-west dipole and the other the north-south dipole.

In the usual turnstile element the 90° phase difference is obtained by coupling both dipoles together through a transmission line an *odd multiple of a quarter wavelength long,* in which case the line acts as a transformer. Under these conditions, at resonance the impedance of the radiator is made equal to the characteristic impedance of the transmission line used for coupling. This is shown in Fig. 6-19 where the N-S and E-W antenna elements each is represented by an impedance equal to Z_0, which is the characteristic impedance of the transmission line shown coupling both dipole elements. Therefore, at point C in the schematic of Fig. 6-19 the impedance offered by both the north-south (N-S) and east-west (E-W) dipoles is equal to Z_0. Since both dipole elements represent the same impedance at point C, the impedance seen looking into the transmission feed line is equal to $Z_0/2$. With such a turnstile arrangement for the transmission of f-m signals at one frequency, the antenna operates satisfactorily and is

broad so far as the impedance is concerned. This broad impedance effect holds even if the dipoles become slightly off tune. However, the radiation pattern for the antenna will change, and this is not desirable for maximum signal input to the f-m receiver using such an arrangement.

When the dipoles are off tune, the impedance will increase since it is a minimum at resonance. This increase may be slight enough not to affect the broad-band impedance effect, but it will affect the radiation pattern. The new off-tune impedance for each element will be $Z_0 + Z_1$,

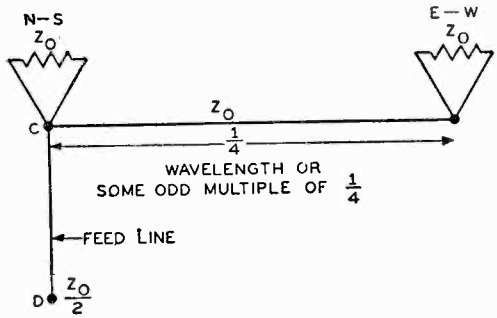

Fig. 6-19. Schematic representation of an omnidirectional antenna, where Z_0 is the characteristic impedance of the transmission line and is also the impedance of the two antenna elements.

Courtesy Wind Turbine Co.

where Z_1 is the slight increase in impedance. At the input of the quarter wavelength coupling line the new impedance presented by the east-west dipole will be equal to $(Z_0)^2/(Z_0 + Z_1)$, which means that the currents delivered by each dipole to the feed line will be different. Consequently, the effective horizontal radiating pattern of the whole antenna will no longer be properly circular, but, when the antenna is badly detuned, will deteriorate to the familiar figure-eight pattern of a simple dipole. Thus, being slightly off tune will change the radiation pattern of the antenna somewhat, which means that the antenna is not broad band to this desired pattern.

To make this antenna system broad band to the radiation pattern as well as to the impedance, a slight change in the transmission line arrangements is made. Instead of the north-south dipoles being fed directly through the transmission feed line and the east-west dipoles through the quarter wavelength coupling line, both are fed in a slightly different manner from that shown in Fig. 6-19. This new arrangement, as used in the turnstile f-m receiving antenna of the Wind Turbine Company, is illustrated in Fig. 6-20. The north-south dipole element is fed through a transmission line equal to some length designated by the letter L and the east-west dipole is fed through a line equal to L plus the one quarter wavelength (or some odd multiple) of the coupling line. This differs from the former arrangement in that lines of length L are added to each dipole feed and then coupled together. Compare Figs. 6-19 and 6-20. The phase difference between

these two dipoles is not altered by this new arrangement and still remains at 90°. The north-south dipole is fed through an effective transmission line transformer network of length L and the east-west dipole through a transformer of length $L + n\lambda/4$ (where n stands for any odd multiple of one-quarter wavelength line and λ denotes the wavelength of the frequency in question).

Off tune the impedance presented by each dipole will change as it did for the former arrangement. The mathematical expressions for the impedances at the input to each feed line are too complex to show

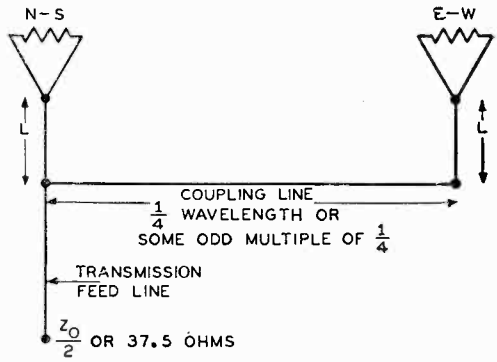

Fig. 6-20. Schematic representation of an omnidirectional antenna that is corrected for off-tune conditions. The additions of the transmission lines of lengths L makes the system broad band to the desired radiation pattern and impedance.

Courtesy Wind Turbine Co.

here. Suffice it to say that the length of L can be chosen according to the characteristic impedances and frequencies involved, so that the magnitude of the impedances offered by both dipoles at the input to their feed lines are the same at some frequency. The resistive and reactive components of the dipole impedance are equal in magnitude, but the reactive components are opposite in sign. In other words, when one impedance offers a reactive component that is inductive, the other offers a reactive component that is capacitive. This is due to the maintenance of the 90° phase difference between the dipoles. The parallel impedance of these two dipole impedances is, then, purely resistive, and equal induced currents will flow in each dipole maintaining the required circular radiation pattern. There is a slight phase difference between the currents, but the phase angle of current in each dipole is very low, so that the phase difference between the two currents is low and has negligible effect on the proper operating of the system.

The antenna system is so designed that the frequency at which the compensating lines of length L perform their function is near one end of the f-m band, while the dipoles are in tune near the other end. Thus, the radiation pattern is given a broad-band effect, so that the antenna is omnidirectional throughout the f-m band.

The dipole element formed by the two coaxial radiators has an input

impedance equal to 300 ohms at the two points of feed-in seen in Fig. 6-18. To convert the high impedance of this balanced output to the low impedance of the unbalanced coaxial transmission line, a special transmission line network is employed. This is illustrated in Fig. 6-21. A half-wave length of coaxial transmission line with a characteristic impedance equal to *one-fourth* the impedance of the balanced output is bent in a U shape, as shown in Fig. 6-21. The impedance between the center conductor and outside conductor (or ground) of the bent coaxial line, is equal to 75 ohms. If a 75-ohm coaxial transmission line is attached to the center conductor at either end of the half-wave coaxial line, the impedance seen, looking into this newly attached coaxial line, is equal to 75 ohms.

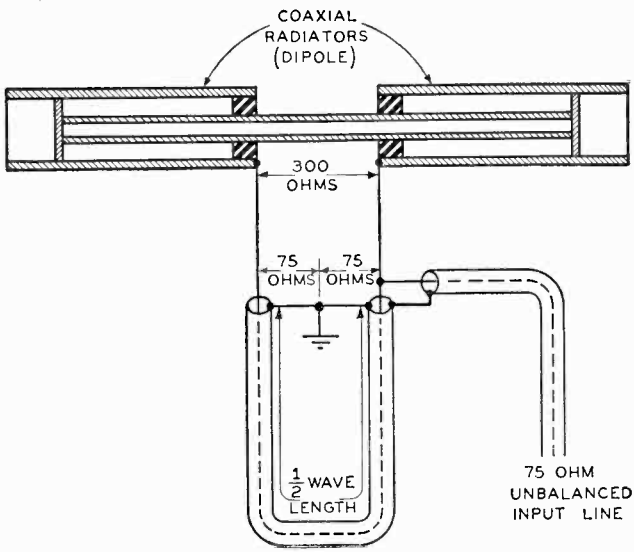

Fig. 6-21. High-frequency network that is used to convert the high impedance of a balanced output to the low impedance of an unbalanced coaxial line.

This system is incorporated in the complete f-m receiving turnstile antenna arrangement shown in the diagrammatic drawing of Fig. 6-22. Each dipole element has a balanced impedance equal to 300 ohms which is transformed to 75 ohms unbalanced by the half-wavelength 75-ohm U-shaped coaxial line. Thus at point *D* the impedance seen is equal to 75/2 or 37.5 ohms. By use of a quarter wavelength piece of 50-ohm coaxial matching line this 37.5-ohm impedance at point *D* is transformed to 75 ohms again. This 50-ohm matching section functions in the manner described under the discussion of the dipole and director arrangement. Since the receiver is based on a

300-ohm impedance, a similar U-shaped one-half wavelength of 75-ohm coaxial transmission line, as used for the dipole elements, is used to convert the unbalanced 75 ohms of the transmission line to the balanced 300-ohm impedance of the receiver for the final impedance matching for the complete system.

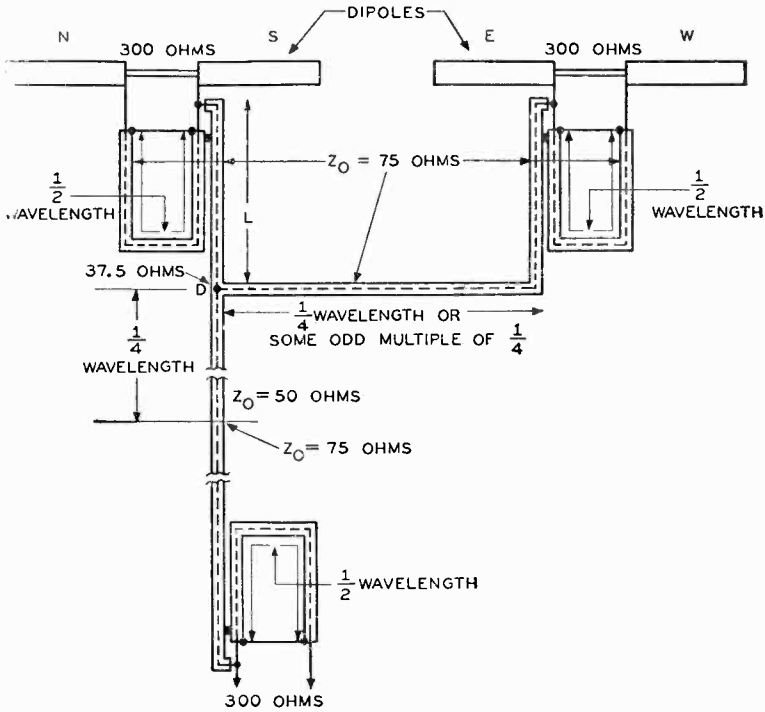

Courtesy Wind Turbine Co.

Fig. 6-22. Network that is used in the omnidirectional antenna under discussion to couple the 300-ohm antenna to a 300-ohm input impedance receiver through a 75-ohm transmission line.

One advantage of the coaxial transmission line over the twin-lead transmission line is that the coaxial line has low loss and inherent low noise pickup. The system of Fig. 6-22 may appear complex in arrangement compared with the others, but it actually is not, since the complexity of the drawing is due to the coaxial lines which occupy little space compared with the dipole elements. Since this antenna offers omnidirectional characteristics, under the conditions of broad-band effects for both impedance and radiation pattern, it will result in better performance for general use than most directional antenna arrangements.

Notes on Installation

It is beyond the scope of this book to discuss the installation procedures for all the different f-m antennas manufactured. The following notes, however, cover the installation of outdoor f-m receiving antennas and apply to all types, unless otherwise specified.

One of the primary requisites in all installations is that the antenna system be mechanically secure. The first necessity is to make sure that high winds, rain, ice, or snow will not affect the mechanical secureness of the system. The reason for this is obvious, since it is desirable that the antenna require little attention once it is installed. Most types of antennas are supplied with the necessary mechanical supports to attach the system to some object such as a roof, chimney, or side of a house.

The antenna should be placed as high as possible and away from any interfering objects which might reflect the f-m signals. Consequently, such high installation points as roof tops are used. The antenna also should be mounted some distance away from any of the metallic objects commonly found on a roof top, such as water drains, pipes, and wires. It is quite as important to make sure that the transmission line used (especially if it is the twin-lead type) is also kept away from metallic objects. By placing the transmission line near such objects, noise and other types of undesired reflected signals can be picked up by the line.

Once the spot with the most freedom from metallic objects has been chosen, two remaining important factors must be taken into account: the orientation of the antenna proper and the correct installation of the transmission line from the antenna to the receiver. In using antennas that are unidirectional or bidirectional, it is important to know something about the f-m transmitting stations within the coverage area of the receiver in question. If the field intensities of most of the transmitting stations within the vicinity of the receiver are about the same, not much difficulty will be encountered in orienting the antenna. If most of these stations are quite near each other as far as the receiver is concerned, the receiving antenna can be oriented simply by placing the pickup element *broadside* to the oncoming f-m signals. If the antenna is placed in a different position there may be a noticeable loss in signal pickup when the receiver is in operation. This is particularly true when the receiver is quite a distance from the f-m stations. However, as pointed out, in localities where the receiver is in the vicinity of strong local stations, variation in the position of the antenna may make little difference.

If the strengths of the f-m transmitted signals, in the locality of the receiver in question, are quite different and if they approach the receiver from different directions, it is advisable to orient the antenna

broadside to the signals that are weakest, in order to have adequate signal pickup on most stations.

The field pattern for a dipole, considered either in the receiving or transmitting sense, is the conventional figure-eight pattern, as shown in chapter 5, with the points of maximum and minimum signal pickup 90° out of phase with each other. Therefore, when going from a minimum signal pickup to a maximum the antenna should be rotated by 90°.

The installation of the transmission line is as important an item as the antenna itself. The transmission lines most commonly used are of two types: the open-wire twin-lead line (with plastic insulation) and the common coaxial line. Both types can be supplied with different characteristic impedances. It is usual, however, to use the twin-lead type of 300-ohm characteristic impedance, since most f-m receivers have an input impedance of 300 ohms. The coaxial type transmission line does not run into such high impedances, usual values being 50, 75, and 150 ohms. However, each individual antenna arrangement requires its own specific setup. The importance of correct impedance matching for maximum energy transfer should be remembered, especially in localities where the received signals are weak. One advantage of the coaxial line is that it has low noise pickup, as compared with the twin-lead type. However, the quicker and easier impedance matching for the twin-lead type sometimes makes this kind more suitable than the coaxial type.

No matter which type is used, the slight difficulties may be overcome by careful installation. In attaching either type line from the antenna to the receiver, the length of line used should be as short and as rigid as possible. The requirement for a short line arises from the fact that the longer the line, the more signal will be lost. The rigidity requirement is necessary to prevent the line from swaying with the wind. A number of things may happen if the line does sway in the wind. The line may be moved near some metallic object, it may be scraped constantly against something which will make for quick deteriorating of the insulator and then perhaps shorting of the line elements, or the line may even be snapped by a strong wind.

The mast and supports of the antenna should have some provision for stand-off insulators or guide loops, so that the portion of the transmission line leading from the antenna can use these insulators or guide loops as a means of preliminary support. These special attachments help maintain rigidity in the line and prevent any unnecessary swaying. Some manufacturers suggest that, when passing twin-lead line through these loops that are connected to metal masts, the line should be twisted two or three times to maintain electrical balance between each wire of the line and the metal mast and thus minimize

noise pickup. However, these twists in the line should be made only in the vicinity of the metal mast.

After passing through the insulators or guide loops, the line should be drawn tight until it is attached to the receiver. In doing this, the line may be pressed flat against only those types of objects that will not influence its transmission characteristics. Such things as wood, brick, and roof shingles (no metal involved) are commonly used. To secure this tightness in the line, special guide loops or other such attachments are often attached to some place in the vicinity where the transmission line is running. Twin-lead line may be fastened at a number of points by using small metal brads (that is, nails without any heads) through the center of the plastic insulator and into any material that will take the nail, and also provided it is not metallic. The brads themselves have a negligible effect on the transmission of the signal along the line, but if nails with heads or similar things are used, difficulties may arise. A wearing effect on the insulator may occur and the line may be short-circuited, or the characteristic impedance of the line at the point where the nails pass through it may be changed, causing a mismatch from the antenna to the receiver.

QUESTIONS

CHAPTER 6

6- 1. When we speak of the noise content of an f-m signal at the detector circuit of an f-m receiver, this total noise originates from two main sources—what are they?

6- 2. *a.* Discuss the voltage and current distribution along a full-wave length antenna with regard to the points of maximum and minimum voltage and current.

b. Repeat part (*a*) with respect to a half-wave antenna.

6- 3. Why are the dipole antennas, such as those illustrated in Fig. 6-3 on page 218, termed current-fed antennas?

6- 4. *a.* What are the names given to the two resistances of an antenna?

b. Which resistance is usually the higher and what is the approximate value of this higher resistance for a simple dipole antenna in free space?

6- 5. Discuss the reason why at its feed-in points, a center fed simple dipole antenna behaves like a series resonant circuit at the frequency to which it is cut.

6- 6. In an f-m receiving system would impedance-matching the transmission-line to the antenna *only*, assure the maximum amount of energy transfer from the antenna to the receiver?

6- 7. How does the input impedance of a simple dipole change at frequencies on either side of that to which the half-wave antenna is cut? Does this changing impedance remain purely resistive?

6- 8. *a.* Explain how the Q of a dipole is decreased when the diameter of the dipole is increased.

b. A reduction in the Q of a dipole enables the dipole to have a broad-band response. However, there is a limitation to the amount of reduction of Q and hence, a limitation in how broad-band the antenna can be. Why is this so?

6- 9. Under ideal conditions, if the input impedance of a simple dipole is assumed to be equal to 100 ohms, then based on this assumption what is the input impedance of a folded dipole?

6-10. Why does horizontal polarization, as used in f-m broadcasting, provide for a better signal-to-noise ratio at the input to the f-m receiver than vertical polarization?

6-11. In what position should the f-m receiving antenna be placed and in what direction should it be oriented for maximum signal pickup?

6-12. What does a reflector element used with a dipole do for the antenna system?

6-13. *a.* *Under ideal conditions* (free space) what would be the length of a half-wave antenna for the center of the 88-to-108-mc band? Give your answer to the nearest whole number.

b. If the weakest f-m signal in an area is at a frequency of 91 mc, to what length would a receiving dipole be cut under normal conditions?

6-14. A balanced input receiver is one that has the center tap of its input coil grounded. This is supposed to help eliminate noise pickup by the transmission line. Explain how this is brought about.

6-15. *a.* Is a director or reflector element usually oriented broadside to the oncoming signal?

b. If the input impedance of an antenna system equals 18 ohms, and if a 150-ohm transmission line is used with a 150-ohm input f-m receiver, what is the calculated characteristic impedance of a quarter-wavelength piece of transmission line used for correct matching between the antenna and the 150-ohm line?

c. It was found that for a certain f-m antenna system employing a number of parasitic elements the input impedance was 75 ohms. It was also found that a piece of 150-ohm transmission line of the proper length was needed as a special matching section to match the antenna to the load. What must the load impedance be to require such a match?

6-16. What type of f-m antenna will receive signals from all directions?

6-17. What are three important requisites for the installation of the f-m antenna system?

CHAPTER 7

THE F-M RECEIVER

Before the advent of f.m. there were two main types of receivers on the market, the t.r.f. and the superheterodyne. Both types were used for the reception and detection of a-m signals. So far as these receivers are concerned, it is well known that the superheterodyne has definitely taken over the field, and the t-r-f receiver is outmoded. Whenever the term "radio" or "receiver" was used, the type of modulation was understood to be a.m. and very seldom, if ever, was the type of modulation mentioned, especially in referring to the commercial type receiver. The coming of f.m. changed the method of talking and writing about receivers because either a-m or f-m signals may be meant.

Similarities and Differences Between the A-M and F-M Receiver

Chapter 1 briefly summarized some of the similarities and differences between a-m and f-m receivers. The three basic types of superheterodyne receivers were illustrated in Fig. 1-15 and are redrawn here for ease of discussion. The a-m superheterodyne receiver illustrated in Fig. 7-1 (A) is of a general type, while two main types of f-m receivers are illustrated in Fig. 7-1 (B) and (C). As pointed out previously, the main differences between the a-m and f-m receivers are in their methods of detection.

We are more or less familiar with the common methods of a-m detection, such as diode detection, grid detection, and plate detection. The analysis of these detector circuits is primarily concerned with a modulated signal that is varying in amplitude, and it is these amplitude variations which are to be reproduced. In the f-m receiver, the detector circuit and its associated networks must respond to a modulated signal that is varying in frequency and not in amplitude, so their design is completely different. It is the purpose of this book to analyze in detail only those circuits dealing with f.m.

In present-day receivers the three types of f-m detector circuits used are the discriminator detector, the ratio detector, and the oscillator detector; these detectors will be analyzed in detail later. The

latest detector, the FreModyne, is analyzed on page 397 of the appendix.

Except for the detector circuits, not much difference can be noted between the a-m and f-m receivers in the block diagrams of Fig. 7-1. However, the r-f, oscillator, and i-f circuits differ as far as their actual physical designs are concerned. If a comparison of the physical con-

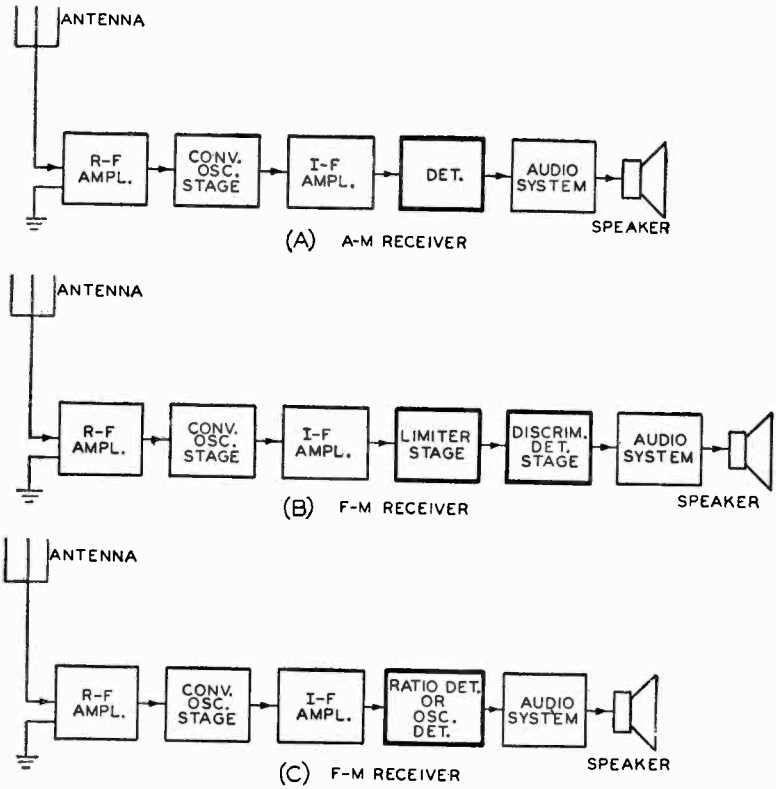

Fig. 7-1. Block diagram of conventional a-m and f-m superheterodyne receivers. Note that the difference occurs only after the i-f amplifier stages.

struction for both the a-m and f-m receivers is made, the r-f coils in the f-m receiver will be found to contain as few as one half or one turn of wire in some instances, compared with quite a number of turns in those coils in an a-m receiver. The i-f coils too have correspondingly few turns. This immediately establishes the importance of f-m design as far as wiring and other physical factors are concerned, because the added inductance of such wiring and the stray capacitance present might affect the circuit at the f-m frequencies and might detune the set or produce unwanted oscillations.

The primary functions of the r-f, oscillator, and i-f stages are the same in both types of receivers. This is amply evidenced by the fact that many of the combination a-m and f-m receivers use the same r-f, oscillator, mixer, and i-f tubes for both a.m. and f.m. The associated circuits, however, are different for each type of signal. The selection of the tuned circuits for each type of modulation is made by special switching arrangements within the receiver.

The primary purpose of the audio stage in reproducing the audio intelligence conveyed by the modulated signal is the same in both f.m. and a.m. Many combination a-m and f-m receivers use the same audio system, but usually the audio response is not high fidelity to the extent possible with f.m. In a-m broadcasting the usual maximum audio frequency that can be transmitted is 7.5 kc (due to regulations imposed by the FCC), but in f.m. audio frequencies as high as 15 kc can always be transmitted. For faithful reproduction of audio signals in either case, the audio stages should be able to pass the maximum audio frequencies involved. A detailed analysis of the audio system is given in a later section of this chapter.

One of the greatest differences between an a-m and f-m receiver is the effect of interference. Due to the type of modulation involved and the circuits employed, the f-m receiver needs a much lower signal-to-noise ratio than the a-m receiver for rejection of noise or other interference. In f.m. the signal-to-noise ratio required is only 2 to 1, in most cases, whereas in a.m. it is 100 to 1. This means that in f.m. the strength of the desired signal need only be twice as great as the interfering or noise signal, whereas in a.m. the strength of the desired signal must be at least 100 times as great as that of the interfering or noise signal.

In understanding the advantages of minimized interference effects, the nature of the f-m signal and the nature of the detector and limiter stages (if any) of the f-m receiver are of primary importance. The former was dealt with in the first part of this book. The transmitted signal, being frequency modulated, has very little chance of changing in frequency or phase due to interference. The greatest change will be in amplitude, since most interference phenomena are amplitude variations. Taking the detector and/or limiting stages of the f-m receiver into account, we find that these stages of the receiver will eliminate amplitude variations due to interference.

THE R-F STAGE

As mentioned previously, there often is no difference in the schematic form of the r-f circuits of both a-m and f-m receivers. However, if the schematics showed the proportional number of turns involved in the coils (that is, indicated the relative values of induc-

tance), some differences would be noted. The differences in design factors of the r-f stages in a-m and f-m receivers are quite numerous. The main problems in the design of the r-f stage, as well as most f-m stages, result from the frequencies of operation and the bandwidth involved. In the a-m broadcast band the frequencies involved are between 550 and 1700 kc compared with the frequencies of 88 to 108 mc for the f-m broadcast band. Based on these frequency differences alone, the problem of circuit design for f.m. becomes very critical, because the introduction of small amounts of lead inductances and stray capacitances, which under normal circumstances will not affect the a-m band, will affect tuning at such high frequencies. Due to the frequency deviation involved in f.m. and, due also to the many sidebands, the effective bandwidth for f.m. is much greater than that for a.m. The r-f tuned circuits in the f-m set must, therefore, be broad enough to accept the wide-band f-m signals without distortion.

Several other factors besides the frequency and bandwidth determine whether or not the set should use a separate r-f stage and the type of tube employed in such a stage. Some of these factors are:

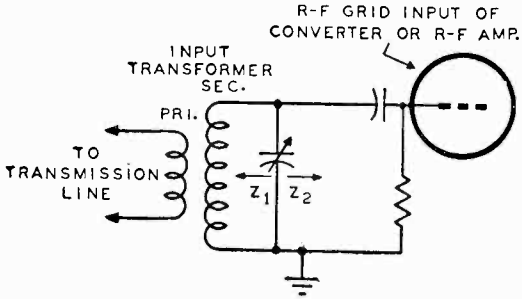

Fig. 7-2. Input circuit to the grid of the first r-f amplifier section. The input transformer provides an impedance match between the low impedance of the transmission line and the high impedance of the grid circuit.

whether the receiver needs increased sensitivity (better gain), added selectivity, or improvement of the signal-to-noise ratio. All these factors will be discussed in the order of the importance each has in the operation of the r-f stage. Other factors, not mentioned here but also important to the operation of the r-f stage, will be included.

The first circuit component met with in following the signal from the antenna to the input of the f-m receiver is the input transformer. This transformer may be the type with completely separate primary and secondary windings, or it may be a tapped coil connected as an autotransformer. In either case, the transformer is supposed to match the impedance of the first r-f stage (whether it be a separate r-f tube or the r-f section of a converter system) to that of the transmission line and antenna system.

Fig. 7-2 illustrates impedance matching by the input transformer to the grid of the r-f stage. Impedance matching between the antenna and the transmission line was discussed in the chapter on f-m receiving antennas, so we know how the signal arrives at the primary of the input transformer. For the maximum amount of signal energy to be transferred from the transmission line to the grid of the first r-f stage, the input transformer must match the high impedance of the grid to the relatively low impedance (generally about 300 ohms) of the transmission line. As seen in Fig. 7-2, the impedance Z_1, looking into the secondary of the input transformer, should be equal to Z_2, the input impedance of the r-f tube. The turns ratio and impedance relationships of the primary and secondary of the input transformer have to be known for an exact mathematical analysis of impedance matching. The manufacturers of f-m receivers consider the fact that impedance matching to the antenna and transmission line is required for maximum energy transfer, and use an input transformer that has a low primary input impedance. As mentioned before, most manufacturers use a 300-ohm receiver input impedance as standard.

For the r-f tuned circuit to accept the signal and all its effective

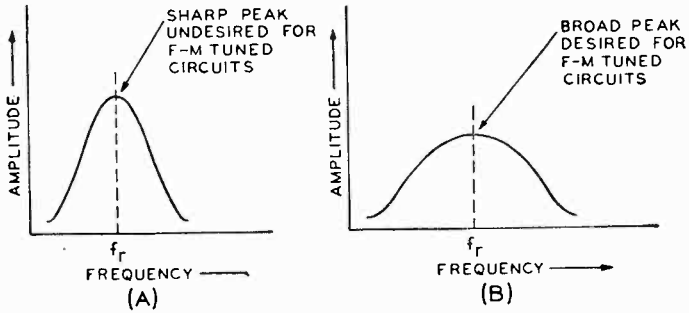

Fig. 7-3. When the Q of a circuit is high, the frequency response is sharply peaked (A) and when the Q is low, the response curve (B) is broad, which is the desired condition for f-m r-f circuits.

sidebands without discrimination, the circuit must be broadly tuned. The broad tuning effect can be accomplished in a number of ways, but the two most common methods are the use of a low Q coil or insertion of a resistance in the tuned circuit, thereby lowering the Q of the circuit. If the Q of the circuit (or coil) is high, the response characteristic of the circuit is sharp, and, thus, a somewhat pointed resonance peak occurs on the response curve. This is indicated by the typical response curve of Fig. 7-3 (A). If the Q of the circuit is low, the peak of the response curve will be broadened as shown by the curve of Fig. 7-3 (B). It can readily be seen from these two curves that if f_r is the resonant frequency of both curves, then the curve of

Fig. 7-3 (B) will accept a signal of greater bandwidth than will the curve of Fig. 7-3 (A).

By a low Q coil is meant that the ratio of inductive reactance of the coil to its effective series resistance is low. This low Q coil effect can be accomplished either by reducing the inductive reactance or inreasing the resistance of the coil. At the high frequencies used for f.m. the value of inductance for the tuned circuit is very small compared with that used in a.m. In the r-f tuned circuits, as well as in the oscillator circuit, the inductances used as part of the tuned circuits are so small that they are as little as one half to one turn of wire. Some of the receivers on the market use the small inherent inductances of parts of the switches as the inductances for some tuned circuits.[1]

R-F Sensitivity and Gain

Let us now digress from the analysis of the circuit components of this stage and deal with the important aspects of sensitivity and gain. It was mentioned that some f-m receivers employ a separate r-f tube before the converter or mixer stage and others use just the r-f section of the converter tube as the input stage. Both methods are satisfactory but their employment must be considered with respect to the rest of the receiver circuit. There are instances where no r-f tube is employed and the receiver does not operate satisfactorily due to the high signal voltage required for proper operation of the detector system of the set.

Until recently the f-m detector circuit almost universally employed was the Foster-Seeley, or phase discriminator, type of detector circuit. This type of circuit requires the use of a limiter to reduce the effect of amplitude variations in the f-m wave. For this purpose, the input signal voltage to the limiter stage has to be high enough, so that after limiting action has taken place, the output will be of sufficient strength to be detected by the discriminator network. When a receiver employs a limiter, a fairly high degree of amplification is needed, and if no r-f stage were used, the necessary amplification would have to be obtained from the i-f amplifiers. This is not usually desirable, however, because of the danger of instability due to increased amplification from the i-f stages. If an r-f amplifier is used, the necessary gain is partially supplied by this r-f stage and, thus, the danger of i-f instability is greatly diminished.

No matter what type detector is used, it is generally highly advantageous to use an r-f stage, because it will improve the signal-to-noise ratio, increase the gain of the receiver, make for better selectivity, as

[1]This method is used in the oscillator circuit of Model T-521 of the Pilot Radio Corporation.

well as help in the rejection of interfering signals. As mentioned in part I of this book, we have to deal with two main types of noise: noise characteristics incorporated in the f-m signal before it reaches the antenna and the inherent noise within the receiver. The main part of the receiver noise is contributed by the tubes. Most of the tube noise is introduced by the mixer or converter tube and the signal level at this stage is particularly low, if no r-f stage is used. When an r-f input stage is used before the frequency conversion system, the signal voltage will be increased due to the amplification of the tube and, therefore, the signal-to-noise ratio at the converter will be higher. The tuned r-f circuit also helps in rejecting unwanted signals because of its selectivity characteristics. There have been cases of interference in f-m receivers using a single r-f tuned stage. But, when two r-f tuned circuits are used, the selectivity is proportionately increased. While one tuned circuit may pass an interfering signal, the two will probably reject it. Use of two r-f tuned circuits does not mean that two stages of r-f amplification are employed. One of the tuned circuits is the input to the r-f amplifier, and the other tuned circuit is the r-f input to the mixer or converter tube.

The sensitivity of f-m receivers employing limiters is lower than that of the average a-m set. Due to the need for greater amplification in such f-m receivers, the required signal input is usually greater than in a-m receivers. However, the sensitivity requirements for other types of f-m receivers are not so high. A detailed explanation of sensitivity and selectivity is given in a later section of this chapter.

Owing to the high i.f. of 10.7 mc used in most f-m receivers operating on the 88-to-108-mc band, there is no chance of image frequencies in the f-m broadcast band being pushed through the r-f tuned circuit. The image frequency is that signal which is equal to the desired signal plus or minus twice the intermediate frequency of the receiver being used. Since this intermediate frequency is 10.7 mc, the image frequency would be the desired signal plus or minus 21.4 mc. As 21.4 mc is greater than the frequency range of 20 mc of the f-m band of 88 to 108 mc, image frequencies of f-m broadcast transmitters cannot be received.

Physical Characteristics of the R-F Stage

The tubes used as r-f amplifiers range from the regular size, such as 6SG7, to the miniature type, such as the 6AG5. In choosing the proper tube a number of factors related to the high frequencies involved must be considered. Some of the more important of these are a high g_m, for better gain characteristics, a minimum of inherent noise, and small values of interelectrode capacitances. The tube chosen should have a low input capacitance and a high input resistance.

In wiring any part of the front end of an f-m receiver, special care should be taken to make the lead wires no longer than necessary because of the added inductive effect greater length has on the circuit. Such special care should be taken in wiring the cathode of the r-f to ground. If the inductance presented by the cathode lead is appreciable at the frequencies involved, a feedback voltage will develop across this inductance, which will lower the input resistance of the tube. If the input resistance of the tube changes, the impedance match existing between the receiver input and the antenna will be upset and a mismatch will occur.

Both capacitance and permeability tuning are used in the r-f tank circuit, but since the r-f tuning is ganged to the oscillator tuning, these types of tuning will be discussed in the section dealing with oscillators and converters.

MIXER-OSCILLATOR AND CONVERTER SYSTEMS

The mixer-oscillator and converter circuits found in f-m sets are similar to those used in a-m receivers. The purpose of heterodyning to produce an intermediate frequency is the same in f.m. as in a.m. However, again due to the frequencies used in f.m., certain circuit modifications must be made to produce the proper i-f signal.

Present-day f-m receivers employ two types of frequency conversion systems; one type using a single tube, a converter, to perform the complete function of frequency conversion and the other type using separate oscillator and mixer tubes to perform the same function. The use of a single-tube converter is quite acceptable at the frequencies in the a-m broadcast band, but increased frequencies present a greater chance for interaction between the oscillator and mixer sections of the converter tube. Some of these difficulties were found with converter systems that operated on the old f-m band of 42 to 50 mc. As the frequency increases beyond these values, interaction of the system and instability of the oscillator section becomes more pronounced. To reduce the effects of these conditions, one of two things is done: separate tubes are used for the mixer and oscillator, or the converter tube employs some means of neutralizing the effect of interaction. Specially designed converter tubes for high frequencies sometimes handle frequency conversion quite adequately. In the majority of cases, however, a separate oscillator tube is used.

A typical converter system is illustrated in Fig. 7-4. The type 6SB7-Y tube employed is specially designed for high-frequency work and is used in a number of the f-m receivers on the market today. The circuit is more or less the same as that of an a-m converter system. For instance, the first grid is used as the oscillator grid in a Hartley oscillator circuit. The third grid is the r-f signal input grid, and the r-f

signal input is either fed directly from the antenna circuit or from a separate r-f stage. There are, however, certain circuit changes or additions made in these circuits which stem from the high frequencies involved. As already mention, the coils contain fewer windings because of the need for smaller values of inductance, but other changes are also noticeable.

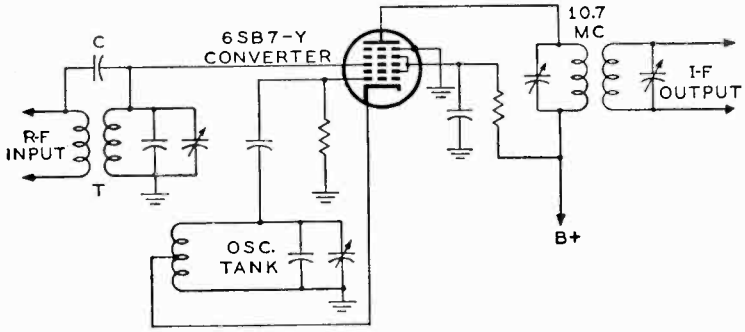

Fig. 7-4. A converter circuit that is used in several f-m receivers. The 6SB7-Y tube was especially designed as an h-f oscillator and mixer.

For example, in the circuit of Fig. 7-4 the r-f transformer *T* has an inherent frequency response characteristic such that at the high end of the band the response, (that is, gain) falls off, and there is a loss of amplification at these frequencies. The capacitor *C* is inserted between the high side of the primary and secondary of transformer *T* to increase the coupling at the higher frequencies and, thus, better the amplifiication at these frequencies. As the frequencies are increased, the capacitor offers less reactance and consequently the high-frequency currents take this reactive path because it offers a lower impedance than the transformer *T*, and, thus, the over-all frequency response is equalized. Such capacitors sometimes are used in the short wave band of a-m receivers.

Interaction between the oscillator and signal grid circuits exists in most pentagrid converter tubes, causing undesired coupling between the two circuits. This interaction is caused by an *effective* capacitance existing between the r-f signal grid and the oscillator grid. This effective tube capacitance consists of two parts. One is the interelectrode signal-grid-to-oscillator-grid capacitance which is not too great for most converter tubes, but which definitely has an effect at high frequencies. The other part is due to *space charge coupling* between these two grids. This space charge effect is very important, because it occurs in most converter tubes. It is briefly explained as follows: There is a space charge region around the signal grid which is continually varying at the oscillator frequency. Due to the resultant effect of this space charge, a voltage of oscillator frequency is coupled into the signal grid

circuit. The effect is the same as if a very small capacitor were connected in the tube between the signal grid and oscillator grid, and some of the oscillator voltage were injected into the signal grid tuned circuit through this effective capacitance causing unwanted interaction between these grid circuits.

A very small capacitor, from 0.5 to 2 $\mu\mu f$, connected between the oscillator and signal grid circuits neutralizes the interaction caused by the effective capacitance existing inside the tube. Primarily caused by the space charge coupling effect, the interaction materially reduces the conversion gain of the tube. When pentagrid converter tubes are used and there is interaction between the oscillator and signal circuits, some means of neutralization should be employed for the circuit to function properly.

Most of the defects found in the use of converter tubes are eliminated by the use of a separate oscillator and mixer tube as illustrated in Fig. 7-5. This type of circuit is also used in many different a-m circuits employing a separate oscillator tube, but for high frequencies

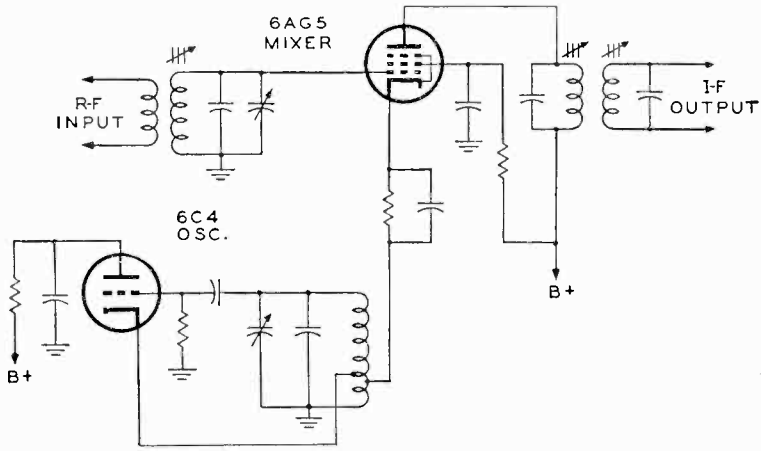

Fig. 7-5. The tubes used in this mixer and oscillator circuit are of the miniature type and were designated for use at high frequencies. The use of separate mixer and oscillator tubes eliminates many troubles that are inherent in a circuit in which a converter tube is used.

it is definitely recommended. The 6AG5 mixer tube and 6C4 oscillator are miniature type tubes especially designed for high-frequency work. Their input, output, and interelectrode capacitances are smaller than the regular size tubes, making them readily adaptable to high-frequency work. The separate oscillator is a conventional Hartley circuit in which the cathode is tapped to the coil. The 6AG5 mixer tube is a pentode with the control grid used for the r-f voltage input and the cathode circuit for the injection of the oscillator voltage.

The method used to inject the oscillator voltage into the mixer tube is readily noticed in Fig. 7-5. Some of the oscillator voltage is tapped off part of the oscillator tank coil and fed directly into the cathode circuit of the 6AG5 mixer tube through the cathode's resistor-capacitor bias combination. Within this 6AG5 tube the r-f signal and oscillator signal are mixed together and the intermediate frequency is selected by the i-f output tuned transformer circuit.

The other forms of oscillator-mixer circuit arrangements are too numerous to mention here. However, they resemble the one in Fig. 7-5 and are quite similar in operation. The circuit illustrated is one that is commonly found in f-m receivers employing a separate oscillator tube. Many of the f-m oscillators employ a Colpitts type circuit, because this circuit affords a means of reducing the effects of certain interelectrode capacitances of the tube used.

Extra capacitive and inductive effects are very important at the high frequencies involved because of factors already mentioned. There is, however, something about high-frequency oscillator circuits, as used with converter tubes and separate oscillators, that we have not yet considered, and that is the important factor of oscillator frequency stability.

Stability of High-Frequency Oscillators

High-frequency oscillators are more subject to drift from the original frequency of operation, due to such factors as heat, humidity, and changes in the B-supply voltage on the elements of the oscillator tube, than are low-frequency oscillators. The oscillator drift caused by heat and humidity is a slow process, wherein the elements of the oscillator tube and the circuit components change their inductance and capacitance values in accordance with the slow changes in temperature and humidity surrounding the complete oscillator circuit.

The effect of humidity on oscillator drift is not readily apparent in locations where the atmosphere is arid and the humidity does not undergo much change; however, it is definitely apparent in places having a humid atmosphere which is constantly changing. The effect of humidity is such that a certain amount of moisture condenses on the coil and capacitor of the oscillator tank circuit and causes a change in the dielectric surrounding them. As far as a variable air capacitor is concerned, the moisture collects on the plates and changes the dielectric between them. Since the dielectric is a determining factor in the amount of capacitance, it is evident that the collection of moisture on the plates changes the value of capacitance, which in turn changes the frequency of operation of the oscillator. The moisture that collects on the coil of the oscillator tuned circuit changes the dielectric properties of the surrounding medium, which in turn changes the

distributed capacitance of the coil, resulting in oscillator frequency drift.

The bad effects of humidity are usually controlled by adding some unit that will produce a constant high temperature in the vicinity of the oscillator, thereby keeping the circuit dry. Another method is to prevent moisture by placing the oscillator tank circuit in some form of impregnated can. Still a third method is to coat the active coil and capacitor elements that may be affected by humidity with some moistureproof material.

Frequency changes due to humidity do not occur very often compared with those due to heating effects. Changes in temperature surrounding the oscillator circuit will cause the inductive and capacitive tank circuit components to change in value, thereby causing the oscillator to drift in frequency. It should be remembered that we are dealing with very high frequencies (the oscillator in f-m receivers operating in the vicinity of 100 mc) and that changes in the shape of an inductance or capacitance, although minute, will cause a definite change in oscillator frequency.

Increases in temperature cause the windings of the coil and plates of the capacitor to expand, thereby inherently increasing the inductive and capacitive values of the oscillator tank circuit. The amount of expansion is determined by the material from which the coil and capacitor are made, and a constant called the *temperature coefficient* is a ready means of determining how much the component will expand. A low temperature coefficient means that the component will have a small amount of expansion and, therefore, contribute little to oscillator frequency instability. Low-temperature coefficient coils and capacitors are desired in high-frequency oscillator circuits. Since it is more difficult to obtain a variable capacitor with a low-temperature coefficient than a variable inductor with this feature, permeability tuning is preferable to capacitor tuning, wherever temperature changes are evident in the oscillator circuit.

Oscillator instability due to temperature changes is chiefly controlled by the insertion of a negative temperature coefficient capacitor which is placed across the oscillator tuned circuit. When the temperature increases, the capacitance of this negative coefficient capacitor *decreases,* offsetting the increase in the values of the oscillator tank circuit components and thereby maintaining stability of the oscillator against temperature changes. The chief drift in the oscillator is during the initial warm-up period of the receiver.

Change in the B-supply voltage on the oscillator tube is one of the chief contributors to oscillator instability. This supply voltage fluctuation is caused primarily by hum interference, line voltage variations, and audio feedback due to the common plate supply impedance. The changing supply voltages cause the transconductance and plate re-

sistance of the tube to change, which causes drifts in the oscillator frequency. To reduce the causes of supply voltage fluctuation, decoupling arrangements suitably placed in the receiver diminish the effects of feedback and hum. Two other methods, somewhat more expensive than decoupling but better in performance, are either to use voltage regulation on the oscillator tube or to apply an automatic frequency control system (afc) similar to that discussed in chapter 3.

Another method to keep the stability of the oscillator constant, as well as reduce interaction between the oscillator and r-f circuits, is sometimes employed in frequency-conversion systems where a separate oscillator is used. (Even with separate oscillator tubes, a possibility of interaction between the oscillator and signal circuits remains, but not to the same degree as with a converter tube.) The output of the oscillator that is coupled to the mixer tube is operated on the second harmonic of the fundamental frequency to which the grid circuit of the oscillator is tuned. A tetrode or pentode tube can be used with the tube operated as a Hartley electron-coupled oscillator. The control grid of the tube is tuned to one half the desired frequency and the plate circuit tuned to the desired frequency, which is the second harmonic of the oscillator grid circuit.

An oscillator in the 50-mc region can be made appreciably more stable than one in the 100-mc band. When the oscillator frequency is doubled, any drift will also be doubled, just as the deviation in the output of a frequency modulator is doubled when the center frequency is doubled. However, if the drift at the fundamental of the low-frequency oscillator is considerably less than half the drift at the higher frequency, then even though the drift is doubled, an improvement in the stability can still be obtained. For the oscillator output voltage to be strong enough for proper mixing with the signal input, the oscillator fundamental frequency signal must be stronger than usual.

Coupling of Oscillator to Mixer

In using a separate oscillator and mixer tube, the oscillator is coupled as loosely as possible to the mixer stage to avoid any interaction between the circuits. In Fig. 7-6 (A), (B), and (C) are illustrated three other types of oscillator-mixer combinations found in receivers. In Fig. 7-6 (A), a simple Hartley oscillator is employed wherein the oscillator voltage is coupled to the signal grid of a pentode mixer tube through a "gimmick." The effect of the gimmick is such that a small amount of capacitance exists between the turns of the gimmick and the grid circuit wiring. This capacitance couples the oscillator grid voltage to the mixer tube. The degree of coupling can be varied by physically changing the number of turns in the gimmick or by changing the distance between the mixer grid and the gimmick.

The mixer in Fig. 7-6 (B) is a pentagrid tube where the first and third grids are used as the oscillator injection grid and r-f signal grid respectively. The oscillator is of the tuned grid tickler coil type where the oscillator voltage is taken off the grid circuit and capacitively coupled through capacitance C to the oscillator injection grid of the

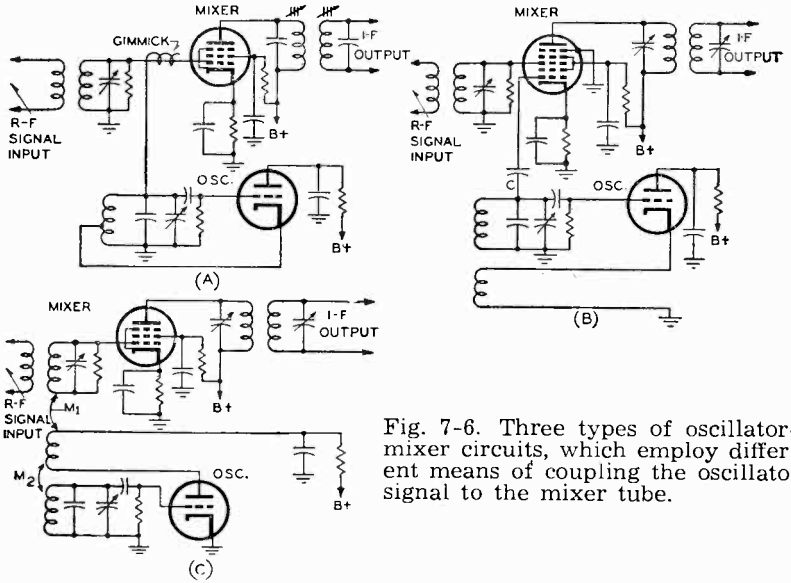

Fig. 7-6. Three types of oscillator-mixer circuits, which employ different means of coupling the oscillator signal to the mixer tube.

mixer tube. The tickler coil in this oscillator is in the cathode circuit of the tube. The proper choice of the value of C will determine the closeness of coupling between the oscillator and signal circuits.

In Fig. 7-6 (C), the frequency conversion system uses a pentode mixer tube in conjunction with a tuned grid tickler coil oscillator. The tickler coil is so situated in the plate circuit of the oscillator tube that coupling exists between it and and the r-f signal input coil to the mixer tube and, also, the oscillator tank coil. In either case the coupling occurs through the medium of transformer action since a mutual inductance M_1 exists between the tickler coil and the r-f coil, and a mutual inductance M_2 exists between the tickler coil and the oscillator tank coil. The distance the tickler coil is placed from the r-f input coil of the mixer determines the amount of mutual inductance M_1 and, hence, the degree of coupling between these two circuits. To avoid interaction between the two circuits, the coupling between these coils should be made as loose as possible consistent with the maintenance of proper mixer operation. This means that the magnitude of M_1 should be as small as possible.

SENSITIVITY AND SELECTIVITY

At the beginning of this chapter we referred to both the *sensitivity* and *selectivity* of a radio receiver. These terms are used so often in the analysis of both f-m and a-m receivers that a discussion of them is in order. They are quite important because they tell, in one manner or another, how effectively a receiver operates.

The term sensitivity is not confined to receivers only but is used in many other ways too numerous to list here. In general a broad definition of the term sensitivity is as follows:

Sensitivity is the characteristic of a piece of equipment that determines how responsive the equipment is to some applied stimulus.

Thus the *sensitivity* of a radio receiver is that characteristic which decides the *minimum* strength of signal input needed to obtain from the receiver the amount of output considered the threshold for correct audio reproduction. Thus, a receiver is said to have a sensitivity of 50 microvolts when 50 microvolts is the minimum amount of signal strength input to the receiver required for the audio output of the receiver to meet certain standards of power.

The Usefulness of Sensitivity

The sensitivity of a receiver indirectly tells us something about the r-f gain in the receiver. By r-f gain we mean that amplification contributed by the r-f, converter, and i-f sections of the receiver. It also tells us whether the inherent noise characteristic of the receiver is high; a somewhat greater signal input is then required to override the low signal-to-noise ratio resulting from this noise effect. In a-m receivers the sensitivity is determined primarily by the noise characteristics of the set. In f-m receivers the noise is only partially a determining factor. One of the principal influences in the sensitivity of the f-m receiver is the requirement that the f-m receiver should not be responsive to a-m effects. The limiter and detector stages of the f-m receiver will determine this. In an f-m receiver employing a limiter and discriminator detector arrangement, the required input signal is quite high compared with a-m and other f-m receivers.

The primary reason for this required high input signal is that the discriminator detector circuit is responsive to a-m changes in the modulated input signal as well as f-m variations. Such a detector network necessitates the use of a limiter system before the input to the detector, to "clip" any a-m effects that may be contained in the received f-m signal. The limiter requires a high signal input, so that the clipped output from the limiter, being free of a-m characteristics, will be of sufficient strength for detection.

In f-m receivers employing either the ratio detector or oscillator detector, limiters are not used, because the detector circuits do not

respond to a-m variations in the input signal. The signal input to the detector stages, therefore, need not be as great as the input to the limiters. Hence, at the demodulator stage such f-m receivers are more sensitive to weak signals than receivers using limiters.

Sensitivity of a receiver can be stated in two ways. One is to specify the minimum required signal input of the set without mentioning the resultant output of the set, which is understood to be that for good listening. The other method is a little more exact, because the power output for the minimum required signal input also is mentioned. For example, when the sensitivity of a receiver is given as "0.5-watt output for 25-microvolt input," it means that to attain 0.5 of a watt output power from the receiver, the strength of the signal input to the receiver must be 25 microvolts.

Essential Features of Selectivity

As applied to receivers, the term selectivity represents another very important characteristic that indicates the ability of the receiver to accept or discriminate against certain frequencies. Selectivity, in general, is applied to devices that contain resonant circuits. These resonant circuits have the property of selecting signals of certain frequencies and rejecting others by their inherent *frequency response* characteristics. This selectivity on the part of the resonant circuit can be illustrated in the form of a frequency response curve, also called a resonance curve, which is a graphical illustration of the output from the resonant circuit. The curve is a plot of frequency versus the current, voltage, or power transfer of the system.

Since all resonant circuits have frequency response characteristics, such circuits are selective. In Fig. 7-7 is shown a typical frequency response curve that can be representative of a number of tuned circuits. Study of the curve will provide a better understanding of selectivity. This curve reveals how well the tuned circuit in question responds to various frequencies within its operating range. The peak of the curve occurs at the resonant frequency f_r of the tuned circuit. This indicates that the circuit is most responsive to this frequency, and, as is noticed from Fig. 7-7, its response to frequencies on either side of the resonant frequency decreases.

Such terms as very selective, increased selectivity, and decreased selectivity are just a few of the many used to express the usefulness of a tuned circuit in regard to certain frequencies. Whether a circuit need be highly selective or less selective is a fundamental criterion in the design of tuned circuits. Therefore, it is important to know the standard determining the range of frequencies for which the tuned circuit is said to operate satisfactorily. From the curve of Fig. 7-7 we see that frequencies as low as f_x and as high as f_y will be passed by the tuned circuit since they fall within the range of the curve. However,

due to the shape of the curve frequencies between f_x and f_y have different amplitudes. Since it is the strength or amplitude of the signal which determines how useful it is, we can readily understand that, although the range of frequencies accepted by the tuned circuit is large, their variation in amplitude implies that not all the frequencies passed are contributive.

In the design of resonant circuits it has been accepted practice to choose certain limiting points on the response curve in determining the degree of selectivity of such a circuit. These are called the half-

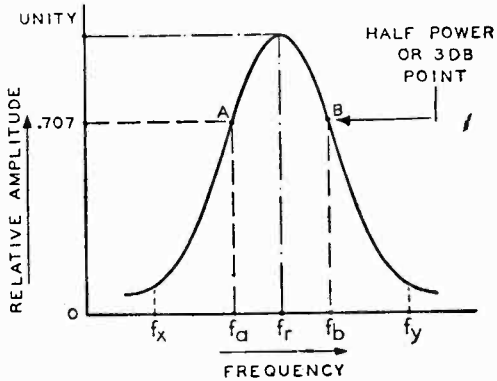

Fig. 7-7. A selectivity or resonance curve shows how a tuned circuit responds to various frequencies within its range. The distance between the half-power points, *A* and *B*, expressed as the frequency difference between f_a and f_b, determines the selectivity characteristic the circuit possesses.

power or 3-db points as shown by *A* and *B* on the curve of Fig. 7-7. The frequencies that correspond to these half power points are designated as f_a and f_b, respectively. Any signals that fall outside these two frequency limits are considered not to have enough signal strength to be acceptable. This means that such frequencies as f_x and f_y in Fig. 7-7 are not acceptable, but that all frequencies between f_a and f_b are acceptable.

By the half-power points of a response curve are meant those points on the curve where the power is equal to one half the maximum power which occurs at the peak of the curve. That is, these points are where the power is 3 db below the peak power, or where the voltage or current is equal to 70.7 percent of the peak voltage or current. These points are readily evident from Fig. 7-7.

When the response curve has a sharply defined peak, so that the distance between the half-power points is diminished, the circuit is said to be highly selective. In the curve of Fig. 7-7 frequencies between f_a and f_b are acceptable and cover a specific range. However, if the peak of the curve is altered so that the distance between points *A* and *B* and, hence, between frequencies f_a and f_b, is decreased, a *smaller*

range of frequencies will be acceptable by the tuned circuit and the circuit is said to have a *higher selectivity*. If the distance between these same points is increased, the acceptable range of frequencies likewise will increase, and the circuit is said to have a *broader selectivity*. Consequently, when speaking of how selective a circuit is, such terms as sharp selectivity, high selectivity, and increased selectivity indicate that the range of acceptable frequencies is small, and such terms as wide selectivity, decreased selectivity, and broad selectivity indicate that the range of frequencies acceptable to the tuned circuit is quite large.

One of the primary factors in determining the degree of selectivity of a tuned circuit is the Q or "figure of merit" of the circuit. In brief, the Q of a resonant circuit is defined as the ratio of the inductive or capacitive reactance (since they are both equal at resonance) to the series resistance of the circuit. If the circuit consists primarily of inductance and capacitance, the Q of the circuit is equal to the Q of the coil (or coils). The Q of a coil is defined as the ratio of the inductive reactance of the coil to its series resistance.

When the Q of a resonant circuit is high, the response curve has a sharp peak and the circuit is said to be very selective, so that only a limited range of frequencies is acceptable. If the Q of the circuit is low, the peak of the curve is not sharply defined and the circuit has a broad selectivity, in which case a much wider band of frequencies is acceptable.

This analysis discloses a ready tool for determining the degree of selectivity of a resonant circuit. Crystals are known to be representative of a high Q tuned circuit, which means that crystal resonant circuits must have a high degree of selectivity. Conversely, crystals are used in circuits where the acceptable range of frequencies is desired to be as narrow as possible. Since resistance is a factor determining the value of the Q of a circuit, it is easily conceivable that by adding resistance to the tuned circuit, the Q can be reduced and, hence, the circuit made less selective.

With regard to Fig. 7-7, it has been said that frequencies f_a and f_b are the acceptable limits, and that the distance *between* these two limits determines the *effective bandwidth* of the resonant circuit in question. Consequently, high Q and, therefore, highly selective circuits have a *narrow bandwidth* and often are termed *narrow-band circuits;* and low Q or less selective circuits have a *wide bandwidth* and often are termed *broad-band circuits.*

In a-m receivers, the bandwidth involved is about 10 kc, whereas in f-m receivers the bandwidth involved is about 200 kc. The ratio between these two is 20 to 1. This means that a-m tuned circuits are highly selective compared with f-m tuned circuits, which are broadly selective. In receivers, the term selectivity is used most often in con-

junction with the r-f and i-f circuits, because these circuits determine the acceptable bandwidth. In the next section we will discuss the i-f system of f-m receivers, and the necessity for broad selectivity will be seen.

In passing, it might be mentioned that besides half-power points or 3-db points, another terminology is used by many technicians and engineers. For instance, the selectivity of an f-m i-f transformer network might be stated as "250 kc broad at *2 times down.*" The term 2 times down refers to voltage and not power. The complete statement means that the peak voltage of the response curve is equal to twice that voltage existing at the points on the curve where the bandwidth is equal to 250 kc. Two times down also means that the voltage has dropped 6 db from its peak value.

Sometimes other points on the response curve are mentioned as being 10 times down or 100 times down. This is done to give a fair idea of the shape of the response curve.

THE I-F SYSTEM

We now come to that portion of the f-m receiver in which the i-f output from the converter system is selected and amplified prior to detection. This part of the receiver is similar in circuit structure and function to a-m sets. However, as mentioned previously, differences do exist, due primarily to the frequency and bandwidth involved. The purpose of the i-f transformers and amplifiers, besides being essential parts of all superheterodyne receivers, is to provide a large part of the r-f gain and most of the necessary selectivity. For, although the receiver may contain an r-f stage in which a certain degree of selectivity and some r-f gain is obtained, the i-f system usually is the determining factor in completing the required gain and selectivity.

In most f-m receiver designs, the bandwidth of the i-f transformer and amplifier arrangement is such that the minimum bandwidth is at least equal to the peak-to-peak maximum deviation of 150 kc for 100 percent modulation of the transmitter. This means that the i-f transformers must have a broad selectivity to pass this range of frequencies. It should be remembered that this 150-kc pass band is a minimum requirement and, if possible, the bandwidth should be equal to 200 kc or more. The reason for this will be obvious if you will recall that in chapter 2, under the discussion of the f-m bandwidth and sidebands, it was shown that the effective bandwidth is dependent upon the number of effective sidebands of the f-m wave which depends upon the audio modulating frequency as well as the amount of frequency deviation. The modulation index thus is the determining factor in the number of sidebands, and the effective bandwidth is based on the audio frequency involved and the number of effective sidebands created. It was shown that the effective bandwidth can

never fall below 150 kc but definitely may go above this value under conditions of 100 percent modulation.

The 2.1-mc i.f. of the first f-m receivers marketed was small compared with that in use today. Though a small value of i.f. is required for better i-f gain per stage, the bad effect of image frequency response that occurred with this early value made a change in the i.f. necessary. This original work was in the old f-m band of 42 to 50 mc, and the new i-f became 4.3 mc. Since image frequency response on the same band can occur *only* when twice the value of the i.f. *does not* exceed the band of frequencies between the assigned limits, such interference could not occur on this band.

Present frequency assignment — 88 to 108 mc — encompasses a band of 20 mc and, therefore, the 4.3 mc i.f. had to be changed to avoid image frequency interference. Some of the i.f.'s used for this new band were at 8.3 mc, but, since twice this i-f is equal to 16.6 mc which is *smaller* than the 20-mc width of the new frequency band, image frequency interference was possible. The i.f. most generally used today is 10.7 mc, and it is believed that the radio industry may officially standardize this value. This i.f. is definitely beyond the range of image frequency interference since twice its value is equal to 21.4 mc which is *outside* the 20-mc width of the f-m band now in existence.

The important thing to remember about the i-f stages is that they must pass the desired bandwidth of frequencies with no discrimination as to amplitude. In other words, the f-m signal input to the i-f system must be, without any appreciable interference effects, at a constant amplitude. For the output f-m signal from the i-f system to be constant in amplitude, the i-f response of these stages should be broad and as flat as possible. A broad selectivity curve with a somewhat level or flat characteristic can be achieved, but, nevertheless, amplitude variations in the output f-m signal are definitely apparent. These amplitude variations are removed, however, by the application of limiter circuits before the discriminator detector; in those circuits not employing limiters, these variations are effectively removed by the detector stages themselves, such as the ratio detector and oscillator detector.

If the selectivity curve is not level, a-m effects will be added to the f-m signal. This was amply proved in chapter 4 with respect to Fig. 4-54 when we showed that a narrow-band f-m signal can be received on an a-m receiver because the output f-m signal, when operating on the slope of the i-f curve, varies in amplitude as well as in frequency. It was shown that, when the response curve was such that its peak became broader, the amplitude variation would diminish.

This also occurs in an f-m i-f circuit. After all, a response curve is a curve that shows the selectivity characteristics of a particular resonant circuit, but these curves are not restricted to operate on a-m or

f-m signals. A particular resonant circuit, like a simple parallel *LC* circuit, will respond to both a-m and f-m signals. This is the case with all i-f transformer networks. The mean resonant frequency determines the center frequency of the signal that can be received, and not the type of modulation.

The ideal selectivity characteristic for an f-m signal would be a flat top response curve as illustrated in Fig. 7-8, where only fre-

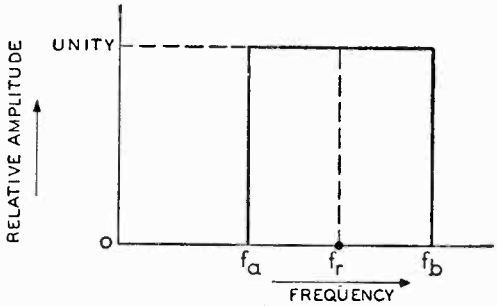

Fig. 7-8. An ideal selectivity curve that is flat-topped would pass all frequencies between the two given limits f_a and f_b with equal amplitude; such a curve cannot be realized in practice with the use of a single i-f transformer network.

quencies between f_a and f_b will be accepted, and all will have the same amplitude. However, such a curve cannot be realized in practice with the use of a single i-f transformer network. Methods which help approach the shape of such a curve entail the use of more than one i-f transformer network, and preferably of three.

Manufacturers are cognizant of the fact that such a curve is only ideal and is extremely difficult to obtain. They are faced with the necessity of getting a final output i-f signal that is high enough in gain and broad enough to pass at least 150 kc at the half-power points. They are also concerned with the fact that a constant amplitude signal is preferable, but since limiters and special detection circuits that effectively do away with the amplitude variations are available, such design is of a secondary nature.

Methods of Obtaining High Gain and Broad Selectivity

High gain and broad selectivity can be procured by a number of methods. In most of these, three i-f transformer networks are used. The number of i-f stages is a determining factor in the amount of i-f gain, but the type of coupling and *Q* of the i-f transformer circuits is the determining factor in the amount of bandwidth. The three principal types of i-f transformer coupling arrangements are as follows:

1. All three i-f transformers are single peaked, somewhat under critical coupling, to the same resonant frequency.

2. The first and third i-f transformers are single peaked just under critical coupling, and the second i-f transformer is overcoupled to produce a double peaked response curve for this latter transformer. All three have the same resonant frequency.

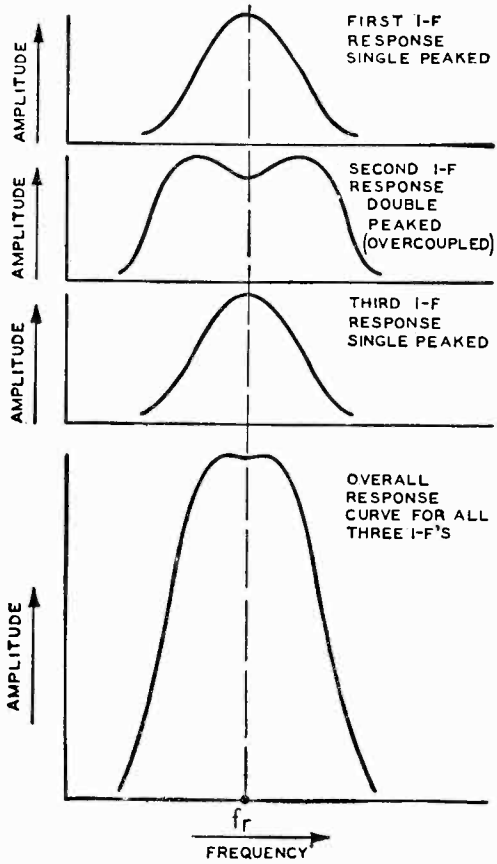

Fig. 7-9. By employing three i-f stages in which two of the stages are single-peaked below critical coupling and the other double-peaked (overcoupled), a somewhat broad, flat-top over-all response curve can be obtained. The response curve for the complete system is obtained by combining the individual response curves of each i-f stage.

3. All three transformers are single peaked but the resonant frequency of each is slightly different. Usually the first transformer has the lowest resonant frequency, the third has the highest, and the second is between the other two. This system is known as "stagger-tuned" i-f transformers.

The first arrangement is very simple. Each i-f transformer is tuned to the same resonant frequency; and, if the circuits have a low Q, the individual gain will be low but the bandwidth will be increased. Using three such circuits will increase the gain to a point where it is sufficient for detection purposes. This type of arrangement, although

common, does not provide too great a bandwidth, because there is a limitation as to how low the Q of the circuits can be and still give sufficient over-all gain. The bandwidth of each individual circuit is the same, so the over-all bandwidth is the same as that of an individual transformer.

Also quite common, the second type of arrangement affords a better method of obtaining a broad selectivity of the over-all i-f systems. In this circuit, not only do low Q circuits broaden the over-all bandwidth, but also the overcoupled i-f circuit helps to make it somewhat broader. Fig. 7-9 will make this much clearer. The response curves of the individual i-f transformers are illustrated, along with the over-all response curve of the complete i-f system. The first and third i-f transformers are single peaked and have the same response curve. The bandwidth of these single-peaked circuits is not enough, so the overcoupled double peaked response of the second i-f transformer is inserted to broaden the over-all selectivity. The over-all response curve of the i-f system is obtained by combining the individual response curves of each i-f transformer. This over-all response curve definitely shows that the bandwidth is wider than any one single-peaked i-f response curve.

The third method is not used so often as the two just described, but it is interesting to know how the broad-band effect is obtained by this

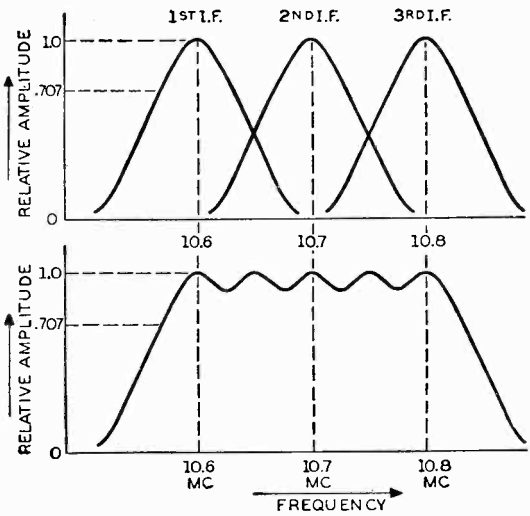

Fig. 7-10. By having three single-peaked i-f stages stagger tuned, in such a manner that their individual response curves adjacent to each other overlap one another, a broad-band over-all response curve can be obtained. The bandwidth of the resultant curve is quite broad at the half-power level.

arrangement. As mentioned, the i-f transformers are "stagger tuned" and, hence, the resonant frequency of each is different. The individual response curves and the over-all response curve are illustrated in Fig. 7-10. The upper part of this picture represents the individual i-f

response curves, and the lower part the addition of these curves, resulting in the over-all i-f curve. To clarify this discussion we will assign frequency values to the individual i.f.'s. To obtain the stagger tuned effect, the first i.f. has a resonant frequency of 10.6 mc, the second of 10.7 mc, and the third of 10.8 mc. The shapes of the individual i-f response curves are such that, when plotted on the same graph, they will *overlap* each other to a degree, predetermined by the individual i-f bandwidths and resonant frequencies. This is shown in the upper part of Fig. 7-10. The bandwidth of each individual i-f circuit is not so broad as desired, but the overlapping effect produces an over-all i-f response as shown in the lower part of Fig. 7-10. Examination of this resultant curve immediately reveals that there is broad selectivity. The 0.707 amplitude or half-power points indicate that the new bandwidth easily encompasses frequencies between 10.6 and 10.8 mc, with 10.7 mc remaining the center frequency of the new curve. The total bandwidth is seen to exceed 200 kc easily.

Such i-f arrangements as these are excellent in producing a broad selectivity and near flat top response, but these circuits have drawbacks when used in f-m receivers. First of all, to align them each individual i-f resonance must be known, and each i-f circuit must be aligned at a different frequency. This procedure is time consuming, since the signal generator has to be reset for each i.f. Another reason it is seldom used in f-m receivers is that such a system contributes very little to the over-all gain of the receiver. This is readily noticed by comparing the amplitude of the over-all i-f response curves of Figs. 7-9 and 7-10. Since i-f gain is an important criterion in the successful operation of f-m receivers, it would appear that another three-stage stagger-tuned i-f system would have to follow the first three in order to raise the gain of the complete system. Such an arrangement is too costly for commercial f-m receivers on the market today, as six i-f stages would have to be employed. Stagger-tuned i-f systems are used frequently in television work, where the bandwidth required may be anywhere from 4 to 10 mc, depending on the system in which it is used.

I-F Transformer for Combined A.M. and F.M.

Many present-day radio sets that employ f.m. also include a.m. That is, the receivers are combined a.m. and f.m. In these receivers separate i-f transformers are used for a.m. and f.m. since the resonant frequency of operation differs so greatly; the frequency for a.m. is usually 456 kc and that for f.m. 10.7 mc, making the ratio of the f-m i.f. to the a-m i.f. approximately 23 to 1. Due to this great difference in i.f.'s, the individual i-f transformers can be arranged in series and in the same shielded can without the risk that one circuit will affect the other. A typical arrangement of such a system is shown in Fig. 7-11. Part (A) is a complete mechanical drawing of the combined series a-m and

f-m i-f transformer networks of the Zenith Model 12H090 combination a-m and f-m receiver. A corresponding schematic arrangement of the coils and capacitors of this combined i-f unit is illustrated in part (B) of the same figure. From this schematic, the series arrangement of the individual primaries and secondaries is easily noticed. Each individual primary and secondary circuit is permeability tuned by a separate tuning slug.

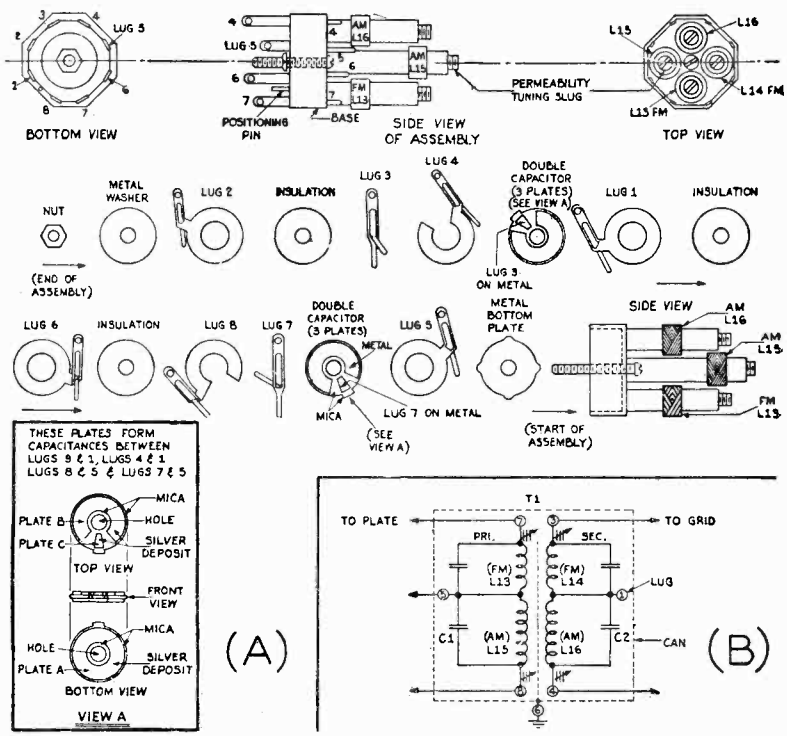

Fig. 7-11. The arrangement of the components making up the f-m and a-m i-f transformers used in a Zenith receiver is shown in (A). The series-connected primary and secondary coils and the capacitors across them are shown in the schematic in (B).

Since the values of the i.f.'s are so far apart, the inductances of the coils likewise differ greatly, and, when operated on the a-m band, the f-m coils L_{13} and L_{14} in Fig. 7-11 (B) offer very little reactance, so that they appear as a short circuit to the 456-kc i.f. When the tuned circuits, which are parallel LC arrangements, are operated on the f-m band, the capacitive reactances of the a-m capacitors C_1 and C_2 at 10.7 mc present virtually a short circuit to this frequency.

The capacitors used in this i-f combination are fixed in size, but they are not the familiar fixed mica capacitors. Instead they are formed by coating thin sheets of mica with silver deposits varying in size, the mica serving as the dielectric and insulator. The value of some of the capacitors, besides being determined by the distance between the silver deposits, is also dependent upon the common area between two silver-coated plates. The mechanical details of these capacitors are evident from the drawing of Fig. 7-11 (A).

A New Type of I-F Transformer

While we are on the topic of i-f transformers, it would not be amiss to discuss a new type of i-f transformer that affords high i-f stability. I-f transformers in general can be tuned by either varying the capacitance or inductance of the tuned circuit. In i-f transformer design, there is a striving for adequate magnetic shielding of the coils to provide greater i-f stability by preventing any stray fields from influencing the magnetic field set up by the coils of the transformer itself. The new type transformer is designed to be used for different i.f.'s, with the 10.7-mc i-f transformer being used primarily for f-m receivers. This type of transformer, shown in Fig. 7-12 (A), is permeability tuned and possesses magnetic shielding which automatically coincides with the tuning of the transformer. This type of i-f transformer is known as a K-Tran and is manufactured by the Automatic Manufacturing Corporation. It is used in a number of f-m receivers and tuners on the market, of which the Fidelotuner manufactured by FM Specialties is an example. This tuner is discussed in detail in the last section of this chapter.

A unique feature about this i-f transformer that accomplishes the magnetic shielding is the design of the iron core used for permeability tuning the unit, a sectional view of which appears in Fig. 7-12 (B). This single unit is used to tune the primary, and another one to tune the secondary of the i-f transformer. Due to the shape of the core, permeability tuning and magnetic shielding of the inductors are accomplished at the same time. Each core has a screwdriver slot on top to permit adjustment of the core within and around the coils. Referring to Fig. 7-12, it will be seen that the cores are threaded and so are the plastic walls of the mechanical support of the i-f transformer. Thus the cores can be screwed in and out by means of a screwdriver. The core itself is a hollow cylinder about 7/16 of an inch long, one end of which has a solid flat top cap which is slotted for the screwdriver adjustment. This is depicted in Fig. 7-12 (B). Inside this cylinder, a rod of about 9/64 inch diameter protrudes from the underside of the flat cap. The complete core is one solid piece and is made of powdered iron.

Two cores are used, each placed in the threaded parts of the transformer's plastic supports as seen in Fig. 7-12 (A). The upper coil is the secondary of the transformer and the lower coil is the primary. Special provision in the i-f transformer can and assembly is made so screwdrivers can be inserted to reach the slotted parts of the cores for alignment purposes. Upon turning the core clockwise, the solid rod

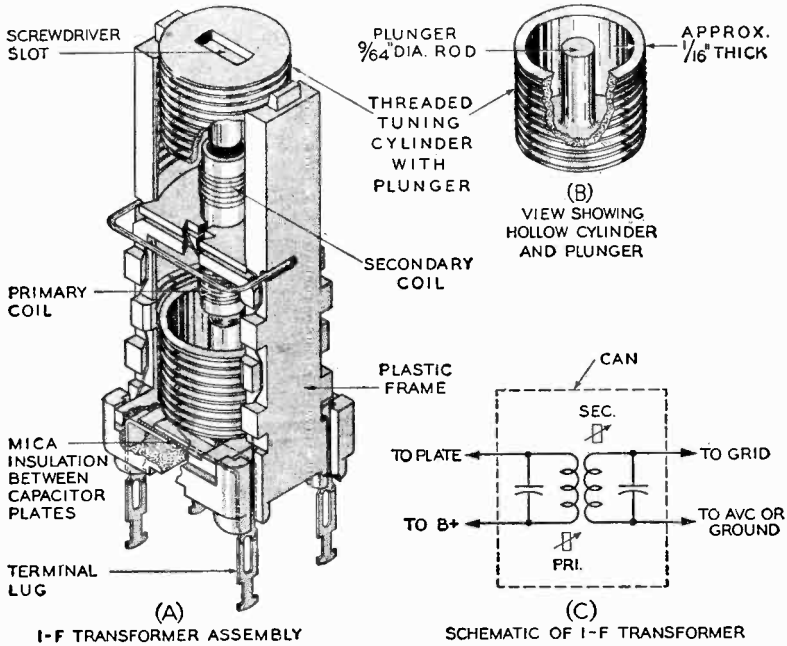

Fig. 7-12. Cutaway views of the K-Tran 10.7-mc i-f transformer and the movable core are shown in (A) and (B) respectively. The schematic of the transformer is in (C).

portion is inserted into the hollow coil forms, and thereby increases the inductance; at the same time the cylindrical part of the core surrounds the coil. Since the core is completely made of powdered iron, not only does it vary the inductance of the unit by means of the center rod, but also the cylindrical part provides magnetic shielding about the coils themselves, thus increasing the stability of the i.f.

Since the frequency is high, the capacitors needed to complete the tuned *LC* tank circuits are small. To conserve space and avoid the use of separate mica capacitors with connecting leads, the capacitors in this transformer are included within the base of the unit in conjunction with the connecting pins. The fixed capacitance is formed by the pins extending inside the base of the unit. Two of the pins are made to overlap each other, and this overlap is separated by a sheet of mica.

The overlapped pins are silver coated and serve as the plates of the capacitor. The two leads from each coil are attached to the pins, so that fundamentally we have a double tuned transformer with permeability tuning. A schematic representation of this transformer is shown in Fig. 7-12 (C).

DEMODULATION–DETECTION

After the i-f section of the f-m receiver we reach the point where there is a marked difference between the f-m and a-m receiver. In both receivers, the next thing we are concerned with is the demodulation and detection of the modulated signal. In a-m receivers, the detector stage that follows the i-f system usually employs the conventional diode detector circuit which detects only a-m signals. In f-m receivers of today three main methods of detection are used. All three methods are wholly different from that employed in the a-m system, and, consequently, warrant a detailed discussion. As mentioned in the first chapter, these three methods of detection are commonly known as the limiter-discriminator arrangement, the ratio detector, and the oscillator detector. Each one of these special detector circuits will be discussed in detail in the order of their appearance on the market.

In the detection of a-m signals, the detector had only to take the audio amplitude variations from the a-m wave and send them through the a-f amplifying system of the set. In f-m detection, the process is not so simple. As only f-m waves are to be detected, provision must be made so that the f-m detector system will not respond to a-m signals. If the detector responds to a-m variations, they must be eliminated before reaching the f-m detector. Secondly, it must be remembered that the amount of deviation of the f-m signal is determined by the amplitude of the audio modulating signal, and the rate of change of the deviation is determined by the frequency of the audio signal. Therefore, the f-m detector has to convert the frequency variation of the f-m signal into an audio signal that will vary in frequency and amplitude.

The heart of the f-m receiver is its detection circuit and, if a thorough understanding of how these circuits function is obtained, 90 percent of f-m receiver circuit analysis has been mastered. The idea behind the design of the various detector circuits is essentially the same, but the circuits themselves are quite different. When f-m receivers first appeared on the market, the type of detector circuit employed was the familiar limiter-discriminator circuit. This detector circuit afforded a quick means of detecting f-m signals and eliminating a-m variations in the signal. In this system the limiter stage levels off, or eliminates, practically all of the a-m variations by "clipping off" the upper and lower portion of the f-m signal so that it will

be constant in amplitude when it reaches the discriminator network. This limiter stage is a necessity because the following discriminator stage, which does the detecting, can respond to a-m as well as to f-m variations in the signal. Consequently, once the signal passes through the limiter stage, the input signal to the discriminator should be practically a pure f-m signal, so that the discriminator receives only f-m variations to which it responds.

To operate satisfactorily this detection system requires a number of preset conditions of r-f gain and receiver sensitivity. The limiter system, which may consist of one or more stages, as well as the discriminator requires signal inputs of a certain level for dependable performance. To deviate from the use of limiter stages and yet obtain the necessary rejection of a-m signals when detection occurs, two other types of f-m detector circuits are used in the commercial f-m receivers of 1947. One is the ratio detector and the other the oscillator detector. The former circuit is in wide use today, whereas the latter is not often used. In the f-m receivers on the market today, the limiter-discriminator arrangement is most used, with the ratio detector a close second choice, while the oscillator detector is used least.

The ratio detector and the oscillator detector are single tube f-m detector circuits that do not employ any limiters. The dual functioning of f-m detection plus a-m rejection is accomplished by each system. Though these systems possess a number of advantages over the previous one, there are also some disadvantages, which will be seen later. The functioning of the oscillator detector is based upon the principles of the locked-in oscillator. In the following discussion, these various detector circuits will be treated in the order of their appearance in f-m sets.

THE LIMITER STAGE

Since the limiter stage of the limiter-discriminator detector system is considered a separate section of the receiver and since it precedes the discriminator, it will be discussed before the discriminator itself. The limiter stage of the f-m receiver immediately follows the final i-f stage and in circuit arrangement appears very similar to an i-f stage. In fact, this limiter system may be considered as the last i-f stage of the receiver. Although the limiter is an amplifier which receives the i-f signal, its primary purpose is not one of amplification but rather one of amplitude limitation. If the f-m i-f signal contains a-m variations, the limiter system will wipe out these amplitude variations. The resultant output from the limiter will be an f-m signal which is varying in frequency only and which has a constant amplitude.

Amplitude variations of the f-m signal before it reaches the limiter stage are caused by interference and the response characteristics of the tuned circuits. The interference may come from any number of sources, such as electrical storms, outside electric apparatus, automo-

biles, a-m station interference, receiver tube noise, and a host of similar disturbances which are very difficult to eliminate. A previous section of this chapter indicated how the response characteristics of the r-f and i-f tuned circuits contributed to amplitude variations due to the curvature of the response curves. It was stated that in order for the response curve not to contribute amplitude variations of the f-m signal, it would have to be flat topped with straight sides as in Fig. 7-8. It is, therefore, seen that the f-m signal, although devoid of a-m variations as it leaves the transmitting antenna, will contain amplitude variations at the output of the last i-f stage in any f-m receiver. It is the purpose of the limiter to eliminate these amplitude variations.

Ideally the function of the limiter is shown in Fig. 7-13 with respect to an f-m signal. The input to the limiter is an f-m signal that

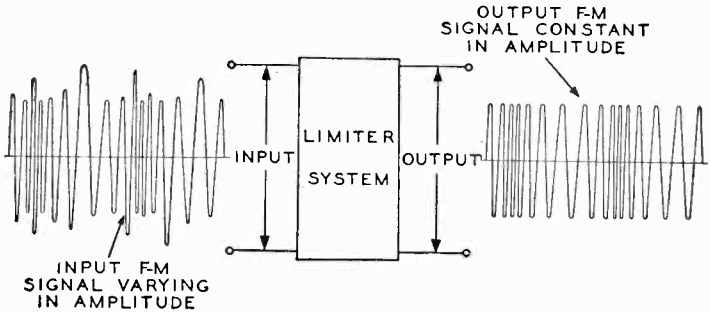

Fig. 7-13. The action of the limiter in an f-m receiver is to clip off the amplitude variations of the input signal, making its output constant in amplitude.

is varying in amplitude as well as in frequency. These amplitude variations are undesired and, by the action of the limiter, are "clipped off" and the output is an f-m signal of constant amplitude.

For an amplifier to act as a limiter, the potentials on the tube are so chosen that the tube will overload easily with a small amount of signal input. A number of special operating conditions are combined to make the limiter function properly. First, the amplifier tube used is usually of the sharp cutoff type like the 6SJ7 or 6SH7. Low values of screen and plate voltage and little or no initial control grid bias are applied to the tube, so that it will quickly overload and plate current cutoff will be rapidly reached.

To understand the operation of the limiter fully, let us first examine a typical plate current-grid voltage (i_b-e_c) curve, as illustrated in Fig. 7-14. In general, i_b-e_c curves show the amount of plate current that will flow for a given value of grid voltage. Most i_b-e_c curves take on the shape shown between points 1 and 2 in Fig. 7-14,

but between points 2 and 3 this curve differs from most curves typifying amplifier action. A great deal of this difference is brought about by "clipping" parts of the positive halves of the input signal due to the grid and cathode of the limiter acting as a diode at this part of the input signal. This is commonly known as diode clipping and will

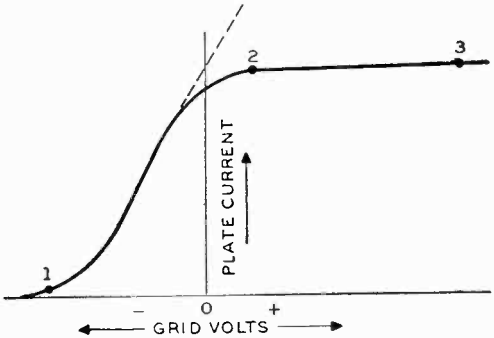

Fig. 7-14. The plate current-grid voltage characteristic curve of a limiter differs from the usual characteristic in that it flattens out in the positive region (beyond point 2). Amplification will be brought about between points 1 and 2. Beyond point 2, limiting action will occur.

be discussed in detail later on. If diode clipping did not occur, the curve, instead of taking on the shape between points 2 and 3, would continue onward as shown by the dashed line.

In the region of the curve between points 1 and 2, the tube, by virtue of the shape of this curve, will act as an amplifier to any input voltage that has values lying in between these two points. Beyond point 2, the curve is seen to level off and, no matter how high the input grid voltage, the plate current will be virtually constant in value. Beyond this point on the curve the tube will function as a limiter. To make sure that the tube functions as a limiter in ideally producing a constant output signal, the instantaneous input grid signal must always rise at least to the value at point 2. If an input signal is such that it does not rise beyond point 2, any amplitude variations in the input signal will be retained in the output.

Similarly, if the input signal swings below point 1, its negative peaks will be clipped, because below point 1 the plate current is substantially zero.

Further analysis of Fig. 7-14 brings a few pertinent facts to light. To get limiting action at both extremes of the input signal, this signal must have a swing that falls outside points 1 and 2 on the curve. Any input signal that has amplitude variations not exceeding points 1 or 2 in voltage will, as a consequence, be reproduced in the plate circuit with these amplitude variations and this is undesired. This simple analysis thus reveals that a certain threshold of input voltage to the limiter grid is needed for limiting action at both extremes of the input cycle.

In contrast with the amplification processes prevailing in a-m systems, further examination of Fig. 7-14 must lead to the conclusion that such action of the limiter tube results in the development of distortion in the plate circuit. Plate-current variations are enlarged reproductions of grid-voltage variations. The distortion does exist, but is of no consequence because, when we clip the amplitude of the wave, we do not change the relative frequencies present in the frequency deviation. An instantaneous frequency of say 10.7 mc does not undergo any change if it is increased from 10 volts to 50 volts or reduced from 50 volts to 30 volts. Any harmonics introduced by the clipping action are of no importance, because the frequencies representing these harmonics are outside the range of the resonant circuit in the plate circuit of the limiter. This circuit responds only to the range of frequencies representing the frequency deviation on both sides of the carrrier, and perhaps a little beyond these limits. The harmonic frequencies are filtered out of the circuit by the transformer which couples the limiter to the discriminator.

Analysis of a Limiter Stage

To understand the true function of a limiter stage we should first know something about its circuit arrangement. Most limiter circuits are very much alike with the chief difference in their grid circuit arrangements. In all grid circuits, however, a grid leak resistor and capacitor arrangement is used. This *RC* combination makes it possible for the bias on the tube to change in accordance with the diode clipping action of the input signal. The time constant of the *RC* network determines how quickly the grid bias change will occur. A typical limiter circuit is illustrated in Fig. 7-15 (A) where resistor *R* and capacitor *C* represent the grid bias network. In other receivers the grid resistor *R* is shunted across *C* and both are placed in the grid return circuit. Numerous versions of these two circuits exist, but the analysis to follow with respect to the limiter of Fig. 7-15 (A) will hold for limiter circuits in general.

The grid arrangement, in conjunction with low plate and screen voltage and no fixed bias, causes *automatic bias regulation* of the limiter tube. At any instant of time there is a bias on the grid, but this bias is changing during the first few cycles of input signal. The instantaneous value of the grid voltage determines the operating bias at each instant of time during these first few cycles. After a certain amount of time has elapsed, a point will be reached where the bias on the tube will remain constant with constant input signal voltage. The control grid and cathode of the tube, in conjunction with the *RC* network, produce the bias. The actual plate current-grid voltage curve for this circuit is illustrated in Fig. 7-15 (B). The bias on the tube without any input signal to the control grid is zero volt. In accordance

with the potentials on the plate and screen, a certain amount of d-c plate current flows through the circuit. As seen by the curve of Fig. 7-15 (B), plate current cutoff will occur when the grid has a bias of —8 volts.

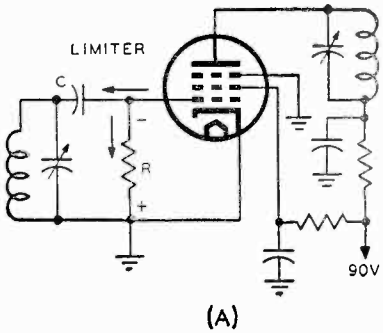

Fig. 7-15. The RC combination (A) determines how quickly the grid bias on the limiter tube will occur, thus causing automatic bias regulation. The clipping action on the input signal is illustrated in the characteristic curve in (B).

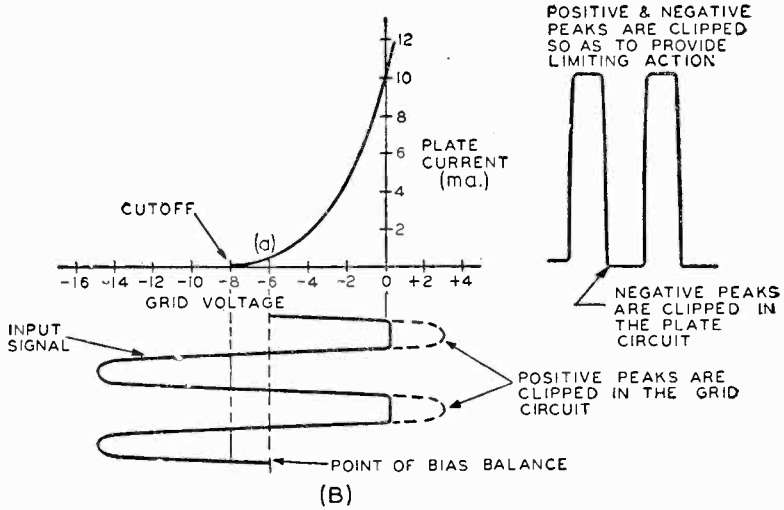

Since there is zero fixed bias on the tube, the control grid will be driven positive during the positive half of the input signal with respect to the cathode, which is at ground potential. As soon as the grid is driven slightly positive, the grid and cathode act as a diode rectifier where the grid takes the place of the diode plate and grid current starts to flow.

As the grid draws current, the coupling transformer from the preceding stage is effectively loaded so that signal voltage applied directly to the grid can become only slightly positive. This is shown in Fig. 7-16 where the positive parts of the input above the zero-volt line are small due to clipping action. Contrast these true small posi-

tive swings shown by the solid lines above the zero grid-voltage axis with the dashed curve. This later curve shows what the signal voltage would be if there were no clipping due to diode action.

The moment that grid current begins to flow, a charge is stored on the grid capacitor C, and, as the signal becomes more positive, the charge on the capacitor increases. On the negative half cycle of input signal, the grid no longer will draw current and the capacitor C will begin to discharge through the resistor R as shown by the current arrow through R in Fig. 7-15 (A). An automatic bias will be devel-

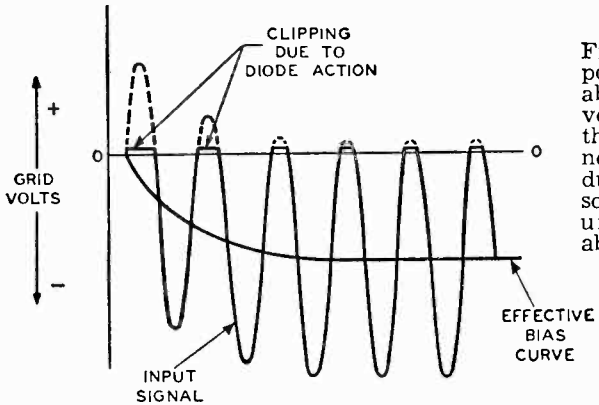

Fig. 7-16. The dotted portions of the wave above the zero grid-voltage axis show what the signal would be if no clipping occurred due to diode action; the solid curves show a uniform amplitude above the zero axis.

oped on the tube, as seen in Fig. 7-16, due to the voltage drop across R. The "effective bias curve" (idealized curve) represents the average bias. The true curve would be a bit irregular, because the diode current flows in pulses.

In practice, the values of R and C are so chosen that they represent a *time constant* somewhere in the vicinity of a few microseconds. This time constant means capacitor C will take so many seconds to lose about 63 percent of its charge through the resistor R. If C is, say, 50 $\mu\mu f$ and R 50,000 ohms, then the time constant will be $R \times C = 50 \times 10^{-12} \times 50{,}000 = 2.5 \times 10^{-6}$ seconds or 2.5 microseconds.[2] This time constant is considered high compared with the time it takes the input i-f signal to complete one cycle. With a 10.7-mc i-f signal, the time it will take the signal to complete one cycle is equal to 1/10.7 mc or about 0.1 microsecond. Comparing this value with the time constant of 2.5 microseconds, it is seen that one cycle of the 10.7-mc input signal will be completed 25 times as fast as that time represented by $R \times C$, and a half cycle of the input signal will be completed 50 times as fast. By the time one half cycle of input voltage is completed, the

[2]The analysis of time constants was first discussed in chapter 4 under pre-emphasis and de-emphasis.

capacitor has discharged only about 2 percent of its voltage. Upon this very significant fact the operation of the limiter is primarily based, because it means that during the first negative half cycle not all of the voltage is discharged from C.

At the start of the second cycle of input signal, the grid voltage is different. A residual voltage remains on the capacitor, because the capacitor keeps a large portion of its charge during the negative half cycle of the signal input. Consequently, no grid current will be drawn during the positive half of the second cycle until this half cycle reaches a value whereby it will surmount the negative voltage remaining on the capacitor. This will occur at some time after the start of the positive half of the second cycle. During the negative half of the first cycle an operating bias was established due to the drop across *R*, and this bias voltage must be overcome by the positive half of the second cycle before grid current can be drawn. When this point is reached, grid current will start to flow again, and the capacitor begin to charge. Since the input signal is continually varying in a negative and positive direction, the capacitor is always being charged or discharged. Since grid current only flows during part of this positive half of the second input cycle, in which case capacitor *C* is being charged, then during the rest of the second cycle the capacitor will discharge through *R*, and a greater operating bias voltage will be developed than during the first cycle.

On the positive half of the third input cycle, a still greater bias has to be overcome before the grid will draw current. This means that a larger negative voltage on the capacitor has to be overcome before the capacitor can become charged. During the part of the cycle when the grid is not drawing current, the capacitor is discharging through *R*. Since a larger initial voltage existed across the capacitor at the beginning of this discharge, a still greater voltage drop appears across the resistance and, therefore, a higher operating bias. This process of a continually higher positive signal needed for grid current to flow for each succeeding cycle of input signal continues up to a certain point. Operating bias also increases with each successive input cycle until a constant bias is reached. The increase in signal input bias reaches a point where a *balance or equilibrium* occurs in the system. After a certain number of input cycles the grid will reach a point where constant *operating bias* on the tube, and the charge and discharge of the capacitor during each succeeding cycle after this point has been reached, will remain the same. The applied d-c voltages on the tube elements, the *RC* time constant, and the strength of the input signal determine this balance point.

Coming back to Fig. 7-15 (B), the operating bias on this i_b-e_c curve is seen to be balanced at —6 volts. This means that after equilibrium is reached the input signal will swing about the operating bias of —6

volts as seen in Fig. 7-15 (B). A glance at the curve will show that —8 volts on the grid (whether fixed or instantaneous) will drive the plate current to cutoff. Thus the negative half of the input signal need swing only 2 volts to result in plate current cutoff. Consequently, the rest of the negative cycle is clipped, or cut off in the plate circuit. This clipping action of the negative peak is shown in the diagram. Clipping of the positive peaks as previously discussed takes place in the grid circuit as a result of the diode action. On these positive peaks the operating bias controls grid current flow to a point where the grid is barely driven positive. This is readily noticed in the diagram where more than 6 volts swing on the positive half cycle is needed to drive the grid into the positive region for grid current flow. In this manner the grid acts as a diode rectifier in conjunction with the cathode, and clipping of the positive peaks results.

The time constant indicates how quickly the grid bias will change with change in level of the input signal to produce amplitude limitation. The amplitude variations in the final output i-f signal due to the response characteristics of the i-f circuit are not radical or sudden changes but gradual ones. As a result the time constant of the network need not be very low to limit such amplitude variations, and time constants of 15 microseconds would be sufficient. But one finds that in practice time constants between 1.25 to 5 microseconds are commonly used so that the operating bias can follow any quick rise in amplitude of the input signal resulting from sudden noise impulses or other interference. If the time constant were too high for the bias to follow this impulse, plate current would flow in accordance with the impulse variation, and the noise impulses would be passed on to the discriminator to be detected and, eventually, reproduced by the audio system.

Practical Cases of Limiting Action

Let us now consider limiting action in connection with an f-m wave which has been passed through the i-f amplifiers and thus had its various component frequencies unevenly amplified. This is shown in the input signal in Fig. 7-17, where those frequencies closest to the peak i-f frequency were amplified most and those with the greatest deviation amplified the least. This conforms with the information gathered from previous discussions of the response curves of i-f amplifier stages. The height of the peaks from the input signal voltage base line, which is the same as the operating bias line, indicates the amplitudes of the varying frequencies in the wave.

Only that portion of the variation in the input signal voltage between points *A* and *E* is reproduced in the output circuit. To the right of voltage line *ED* and to the left of voltage line *AC*, the input signal falls outside points *A* and *B* of the curve and consequently will not result in any plate current variations. The clipping action is readily

apparent in the output signal, which is seen to vary in frequency but to be constant in amplitude as the true f-m wave should be.

Next let us consider limiting action in relation to an f-m signal upon

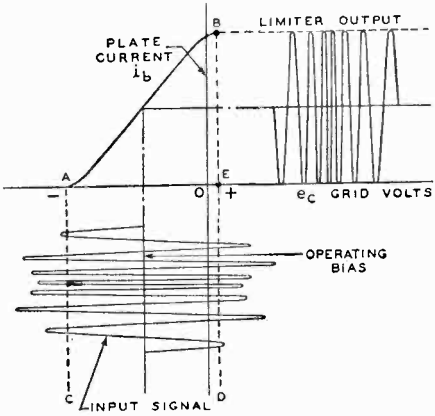

Fig. 7-17. Only that portion of the input f-m signal that lies between *AC* and *ED* is reproduced in the output, and the rest of the input signal is limited. The limiter output while varying in frequency is constant in amplitude.

which is superimposed a number of noise peaks, as shown in Fig. 7-18. Variations in amplitude of the f-m signal are produced by noise peaks which have combined with the wave. These noise components are of

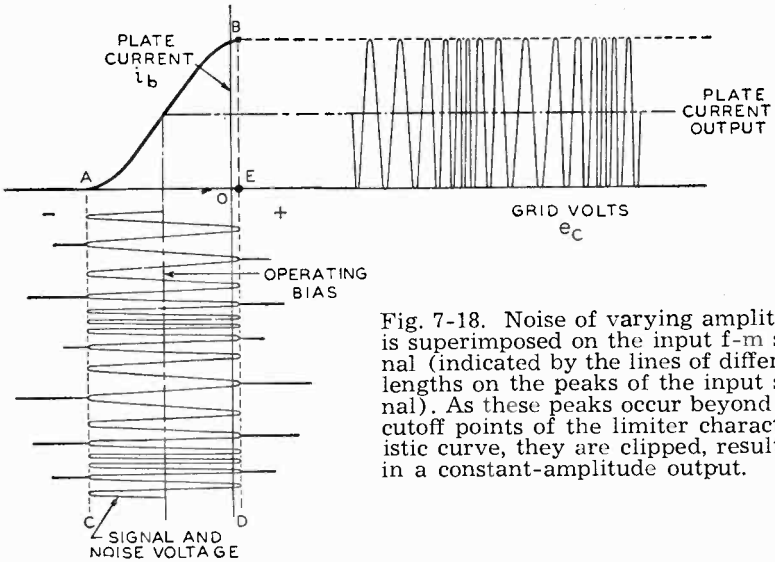

Fig. 7-18. Noise of varying amplitude is superimposed on the input f-m signal (indicated by the lines of different lengths on the peaks of the input signal). As these peaks occur beyond the cutoff points of the limiter characteristic curve, they are clipped, resulting in a constant-amplitude output.

varied magnitude and those having an amplitude much less than the signal voltage are overridden by the signal, but those which are

stronger than the signal would, without the limiter, be reproduced. It is seen that, by virtue of the limiting action, any signal or noise voltage in excess of that required to drive the grid of the tube to plate-current cutoff in the negative region and to draw grid current in the positive region will not cause corresponding changes in the plate current. Therefore, the signal and noise peaks to the left of the dotted line *AC* and the right of the dotted line *ED* are effectively wiped out of the input signal. Thus the output signal corresponds in frequency to the input signal, but does not vary in amplitude.

It should be observed from Fig. 7-18 that the limiter has an avc action. The output signal remains practically constant for any increase in the amplitude of the input signal above that required for limiting action. Therefore, the output of the limiter is substantially independent of input, and the signal voltage fed to the discriminator detector will be of constant amplitude for all signal voltages above the limiting threshold.

Actual signal level in the output circuit of the limiter is governed by the possible relative changes in plate current between points *A* and *B*. It can be raised or reduced by increasing or decreasing the operating voltages on the tube. The effect of increasing the values of plate and screen voltage would be equivalent to moving out the points of plate-current cutoff and grid-current flow, points *A* and *B* respectively in Fig. 7-18, and thus increasing the spread between the threshold limits *AC* and *ED*. A signal of greater amplitude would then be required to produce the limiting action. But a correspondingly larger signal output would also result, and, consequently, less audio gain following the discriminator detector would be needed. However, if the limiter-tube operating voltages were reduced, the cutoff and grid-current points *A* and *B* would be brought closer together, and the spread between *AC* and *ED* would be reduced. A signal voltage of less amplitude then would suffice to produce the limiting action, and less gain would be required in the r-f and i-f stages. The signal output of the limiter would be correspondingly reduced, calling for higher audio gain following the discriminator detector.

Considered alone, the foregoing could lead to the conclusion that the most appropriate operating point for the limiter would be that requiring the least signal input voltage. However, this contradicts a previous statement that an r-f signal of considerable amplitude is required for the proper functioning of the limiter tube, and best operation is obtained by complying with the latter statement. Proper limiter action must take place over the full frequency deviation range, and a marked difference exists between the signal level at the i-f peak and at the limits of the frequency deviation range. Also, the substantially flat points of plate-current cutoff and grid-current flow

that can be reached are considerably beyond the point where limiting action first begins. The tube may start to limit with a signal input of about 3 volts, level off at 5 volts, but not become substantially flat at a signal input of much less than 12-14 volts.

The full implication of this characteristic of the limiter will be better appreciated by reference to Fig. 7-19. The r-f input signal is shown with a gradually increasing amplitude and noise peaks with

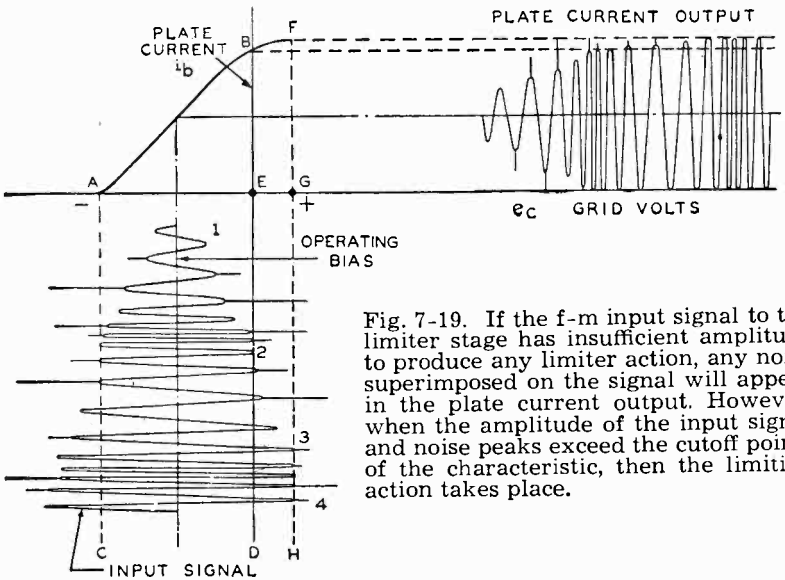

Fig. 7-19. If the f-m input signal to the limiter stage has insufficient amplitude to produce any limiter action, any noise superimposed on the signal will appear in the plate current output. However, when the amplitude of the input signal and noise peaks exceed the cutoff points of the characteristic, then the limiting action takes place.

random amplitude. As before, *AC* and *ED* represent the points at which limiting action is fairly complete.

Obviously, from point 1 to 2 the *signal* amplitude is not sufficient to produce any limiting action. As a result the noise peaks and amplitude variations of the signal itself existing between these points and between lines *AC* and *GH* are reproduced in the output signal. Those noise peaks between points 1 and 2 lying to the left of line *AC* and to the right of line *GH* have amplitudes sufficient to produce limiting action and are clipped. From points 2 to 3 the amplitude of the *signal* approaches the value within the limiting action range. From points 3 to 4, however, the input signal and noise components are of such amplitude that they swing beyond line *GH* and into that region where the clipping action occurs.

Any signal and/or noise peaks that fall within lines *ED* and *GH* are reproduced in the output but considerably reduced. This is shown in Fig. 7-19. They appear because the upper end of the plate-current

curve beyond B is not completely flat, but continues to rise slightly from point B to point F. When the noise peak swings the grid into this region, but the signal does not, the noise peak produces an additional rise in the plate current which appears in the output signal.

AVC From Limiters

The action of limiters dictates an extra use for them in f-m receivers. In a-m receivers, automatic volume control voltage is taken from the diode detector, but in the limiter-discriminator circuit an available avc voltage is obtained from the limiter circuit. This voltage

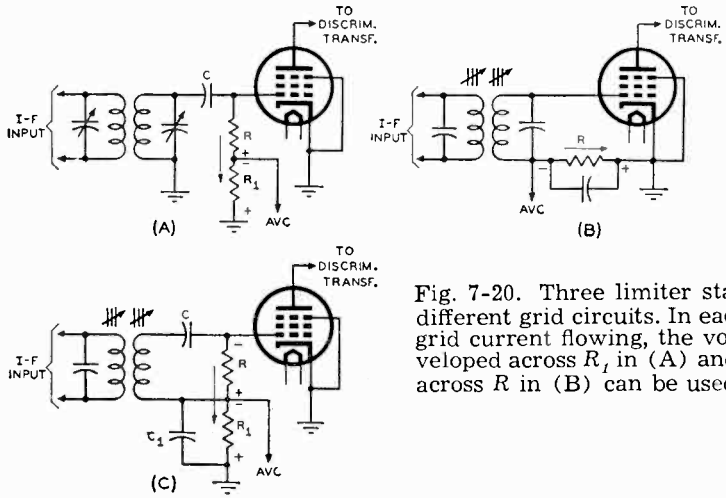

Fig. 7-20. Three limiter stages with different grid circuits. In each, due to grid current flowing, the voltage developed across R_1 in (A) and (C) and across R in (B) can be used for avc.

is taken off that section of the limiter circuit that acts as a diode rectifier, namely, the grid circuit of the tube. It will be recalled that due to the discharging of the capacitor of the time constant network, a bias is developed across the grid-leak resistor. Also, the stronger the input signal, the greater will be the bias developed across the resistor. Another glance at Fig. 7-15 (A) will reveal that due to the current flow through R, the grid side of the resistor is made negative with respect to ground. Since the bias on this tube is a function of the instantaneous input signal and becomes more negative with increase in signal input, we have a point from which avc voltage can be obtained.

Figs. 7-20 (A), (B), and (C) illustrate three limiter stages with different grid circuits for each. In each grid circuit the bias is developed across the resistors in the grid to cathode circuit due to the current flowing through them. Owing to the direction of the current flow, the potentials on the resistors are negative at the side nearest the grid

and positive on the other side of the resistors. The point where the avc voltage is taken off is indicated in each diagram.

In Fig. 7-20 (A) the avc is due to the voltage drop across resistor R_1 alone, although both resistors contribute to the total operating bias voltage on the tube. The time constant for this circuit is $(R + R_1) \times C$ since both resistors are in series. In Fig. 7-20 (B) the total operating bias developed across the only resistor R is available for avc. In this circuit the RC time constant components are in parallel and are located in the grid return lead. Therefore, the point at which avc is taken off is at low r-f potential compared with that on the grid of the tube. This is one reason two grid resistors were used in Fig. 7-20 (A), as well as in Fig. 7-20 (C), and the avc voltage was taken off the second resistor. In the circuit of Fig. 7-20 (C) only capacitor C and resistor R form the time constant network, and capacitor C_1 and R_1 have nothing to do with the time constant. As mentioned, the avc voltage is taken off the top side of R_1; C_1 is inserted to act as an r-f bypass for this avc voltage.

Besides being a source of avc, the grid circuit may also be a means of obtaining tuning indication for f-m receivers. Since this grid point is a convenient source of avc voltage which in turn is a ready means of operating a tuning indicator tube, such as the 6E5 or 6U5 in a-m receivers, this avc voltage likewise can be used to indicate the proper tuning of the set. When a station is exactly tuned in, the maximum signal input is being received; this means that there is a maximum signal input to the limiter grid at that tuned frequency. Consequently, the maximum current flows through the grid resistors, and the maximum value of avc voltage as well as bias is developed. The tuning indicator operates on the principle that the greater the input avc voltage the more the eye will close. Therefore, when the station is tuned in properly, the shadow angle of the tuning indicator will be at a minimum.

Although the great simplicity of this system is an advantage not to be overlooked, it has a definite disadvantage, which lies in the fact that the avc (or first limiter grid) voltage may not be a maximum at exactly the frequency that is optimum for operation of the detector. This condition should not be found in a set which has just been aligned. But some time after a set has been aligned it is natural that drifts will have occurred. Consequently, it may not be possible to obtain exactly this tuning by means of the avc voltage-controlled tuning indicator tube, because the avc voltage depends upon the overall i-f amplifier tuning, and not upon the tuning of the detector. A further defect in this system is that the i-f characteristic of an f-m receiver is more flat topped than that of an a-m receiver, so that there is no definite easily observed peak in the avc voltage coinciding with the center i.f.

Since this grid circuit may be used for obtaining an avc voltage as well as help tune f-m receivers, it also aids in the alignment of the receiver. This will be explained in detail in the chapter on alignment.

Limiters in Cascade

So far all the discussion of limiters has been concerned with a single limiter stage. Such circuits function very well and are used in the majority of f-m receivers employing limiter-discriminator networks. A number of manufacturers, though, use two limiters in cascade to obtain better over-all limiting characteristics. When two limiters are in cascade, the circuit arrangement of each is not fixed but can vary quite a bit. However, the reason cascaded limiters are employed is practically the same in all cases.

As is done with only one limiter, the two limiters are inserted between the last i-f amplifier stage and the input to the discriminator. The input to the first limiter is the usual secondary tuned circuit of the last i-f transformer, and the output of the last limiter is the primary tuned circuit of the discriminator transformer. Cascaded limiters can be used in various ways. The greatest differences involved are in the coupling methods employed *between* the limiter stages. For instance, either transformer, resistance-capacitance, or impedance coupling may be used. As in all coupling methods, each has certain advantages over the other. These three types of limiter circuits are illustrated in Fig. 7-21 (A), (B), and (C), respectively. All the circuits are of the grid-leak type where the bias is developed across the resistors in the grid circuits. So far as gain performance is concerned, the transformer-coupled type gives higher voltage gain over the other two circuits than the other types of coupling but is more expensive to use. Resistance-capacitance coupling is the least expensive to use, and it has the inherent quality of a broad response. The impedance-coupled type also allows for a broad band but assures somewhat better gain than the resistance-capacitance coupling.

The use of two limiters in cascade is intended to give better limiting action for quick impulses as well as the slower amplitude variations that are caused by the nonlinear response characteristics of the i-f transformers. To accomplish limitation of both rapid and slow amplitude variations successfully, each limiter stage is given a different time constant. In Fig. 7-21 the time constant of the first limiter tube is given by $R \times C$ and of the second stage by $R_1 \times C_1$. One time constant is usually made smaller than the other. This smaller time constant network is supposed to take care of the limitation of sudden quick impulses by allowing the grid bias to swing in accordance with the input signal. The larger time constant takes care of the slower amplitude variations as described previously.

When the first limiter has a value of $R \times C$ equal to about 1.25 to 2.5 microseconds, this stage is supposed to take care of the sudden sharp impulses, whereas the other stage will have a higher time constant, anywhere from 5 to 20 microseconds, to take care of the other amplitude variations. The time constants can also be reversed with the lower time constant in the second stage. In either case, the overall functions are the same.

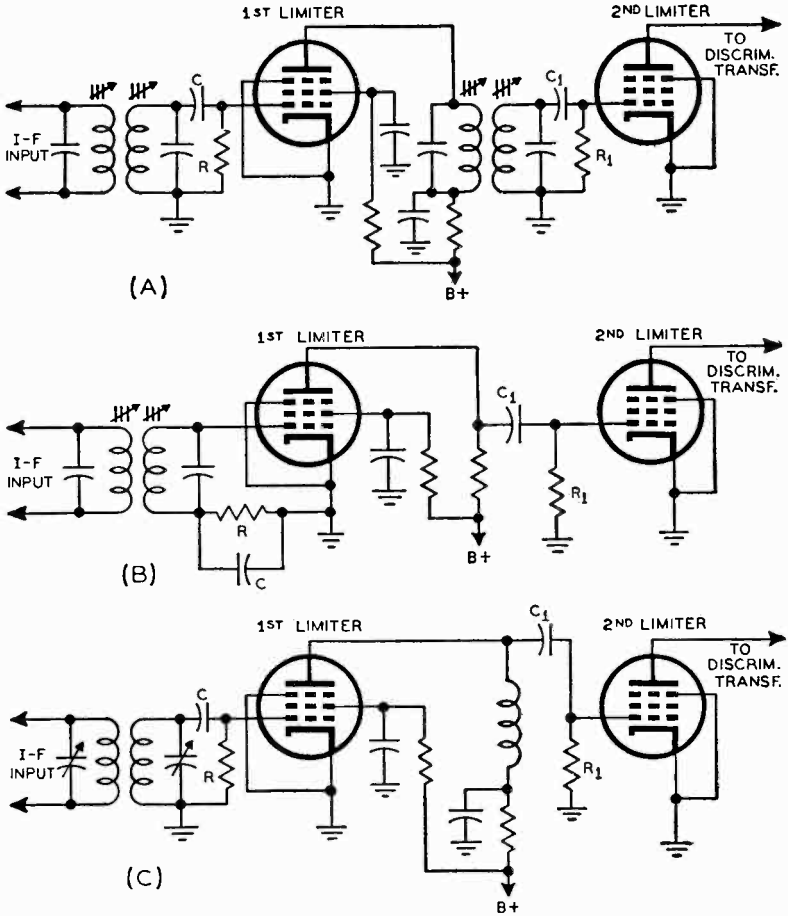

Fig. 7-21. When two limiters are used in cascade, the method of coupling used between them may vary widely. In (A) transformer coupling is employed, in (B) resistance-capacitance coupling, and in (C) impedance coupling is used. In each case the time constant for the first stage is established by R and C and in the second stage by R_1 and C_1. The time constant for each stage is usually different.

Occasionally both time constants may be equal or differ very little from each other, in which instances both time constants are made low. This arrangement is resorted to because it is possible for the output of the first limiter to contain some amplitude variations, and the second tube is included to limit these variations for a more conclusive over-all limiting action.

Input Voltage Considerations

One of the rudiments of correctly using a limiter system is to know the minimum amount of input signal required to have the system limit properly and, in addition, produce an output signal strong enough for detection. As explained before, a certain threshold voltage has to be met to have the stage following the last i-f stage act as a limiter. Therefore, the output of the last i-f stage must be of sufficient strength to drive the limiter tube beyond the threshold point of operation. Since the last i-f stage has to drive the limiter tube, all the previous stages together must have produced enough signal output to cause the last i-f tube to drive the limiter tube properly. Since the input signal to the receiver times the *fixed* amount of gain of the r-f and i-f stages determines the signal input to the limiter system, it is evident that, for a given receiver, the variable factor of signal pickup determines whether or not there will be enough voltage to drive the limiter.

From the foregoing factors we see that for an f-m receiver with a fixed amount of r-f and i-f gain the antenna input signal to the first stage of the receiver has to be above a fixed value. For instance, if the required threshold voltage of the limiter tube is 2.5 volts and if the over-all r-f and i-f gain is equal to 100,000 times, the necessary antenna input voltage to the first stage of the receiver is 2.5 volts/100,000 or 25 microvolts. This means that any antenna signal input below 25 microvolts will not drive the limiter sufficiently to cause limitation.

If too many i-f stages are used to obtain the necessary gain, there is danger of regeneration in these stages. It is advisable (and is usually done) to employ a separate r-f stage ahead of the converter system, so that a good over-all gain is obtained. Thus, the limiter stage clearly has a very decided influence on the design of the other stages and definitely influences the gain, sensitivity, and selectivity of the receiver.

The selectivity of the i-f stages helps determine the necessary amount of antenna input signal. This is best explained in terms of the i.f.'s response characteristics. The amplitude of a signal passed through the i-f network is not constant for the complete range of frequencies the network is designed to pass. Since all these frequencies must be limited, that part of the i-f curve that produces the lowest amplitude must be the criterion in the design of the gain of the receiver. In other words, with the proper r-f and i-f gain, this i-f band-pass signal must

exceed the threshold voltage required for the limiting tube at the smallest amplitude within its band.

As mentioned, the limiter tube has a certain amount of amplification, but beyond some value of signal input the limiter saturates, and a constant output voltage is the result. This is also true of the cascaded or double limiter. The latter arrangement, however, produces a higher degree of amplification than a single limiter for the same amount of signal input. That is, for the same amount of signal output, the cascaded limiter stage requires a smaller threshold voltage input. Consequently, for the same amount of gain preceding the limiter, the sensitivity of a receiver using cascaded limiter stages is greater than one with the single stage. Or to put it another way, for the same sensitivity requirements, less over-all r-f and i-f gain is needed in the double than in the single limiter system to produce the same output voltage.

THE DISCRIMINATOR DETECTOR

Immediately following the limiter is the discriminator stage. The many different types of discriminator networks, all have the primary function of demodulating the incoming f-m signal. It should be remembered that this input f-m signal is constant in amplitude due to the action of the preceding limiter stage. The discriminator circuit did not come into being with f-m receivers. It has been used in automatic frequency control circuits both in a-m receivers and transmitters to stabilize the frequency of the variable frequency oscillator. The use of one type of discriminator circuit, namely the Foster-Seeley type, was discussed under the automatic frequency section of chapter 3.

Most f-m receivers employing limiter-discriminator circuits now use the Foster-Seeley type of discriminator. To understand fully how this discriminator works, we will first study the basic operation of a similar type of discriminator which was one of the first to be used commercially.

The Double Tuned Discriminator

The circuit for the Crosby or double tuned type discriminator is illustrated in Fig. 7-22. In the analysis of this circuit we will assume that the tube preceding the discriminator is a limiter whose output is an f-m signal of constant amplitude over the complete deviation range of the signal. The output circuit of the limiter is a tuned circuit T_1 which is resonant at a peak of 10.7 mc, and is coupled to two other tuned circuits, namely T_2 and T_3. The three inductances representing these tuned circuits are all part of a transformer system where T_1 is considered the primary and T_2 and T_3 each part of the secondary. For illustration we will assume that the response characteristic of T_1 is broad enough to pass a bandwidth of 350 kc, which means 175 kc on

either side of the 10.7-mc resonant point. The other two tuned circuits T_2 and T_3 are resonant to different frequencies, one tuned above the 10.7-mc resonant frequency of T_1 and the other tuned below it. It is immaterial which is tuned above or below, but we will assume that

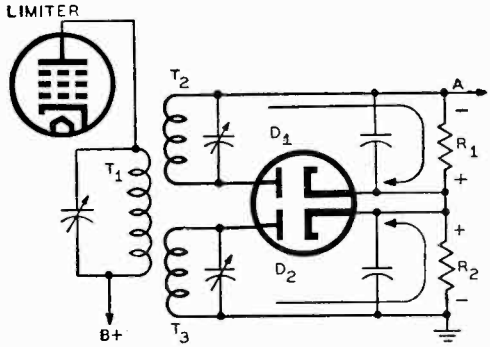

Fig. 7-22. Schematic of the Crosby or double tuned type of discriminator. In this example, T_1 is assumed to be tuned to 10.7 mc, T_2 to 10.775 mc, and T_3 to 10.625 mc, i.e., the two portions of the secondary T_2 and T_3 are tuned 75 kc above and below the resonant frequency of the primary respectively.

each circuit is resonant at 75 kc away from the 10.7 mc of T_1 with T_2 tuned above at a resonant frequency of 10.775 mc and T_3 below at a resonant frequency of 10.625 mc. Since the two tuned secondary circuits are peaked to different frequencies, their responses to frequencies present in T_1 will be different.

Fig. 7-23 is a plot of the individual response curves of T_2 and T_3 with the values of amplitude included just to simplify the discussion. This figure shows us that at only one frequency is the response of both circuits the same. With the basic action of these three tuned circuits known, we will show how the two diodes of Fig. 7-22 act in conjunction with the tuned circuits to change the f-m signal into a-m variations for proper detection.

Glancing again at Fig. 7-22, we see that each secondary tuned circuit is connected to a separate diode; both diodes may be contained either in a single envelope or in separate tubes. The method of connection of the load resistors across the output is such that the circuit is arranged in the form of a differential rectifier system. That is, the output voltages across the individual load resistors buck each other. If the individual diode current flow is traced, it will be evident that the top part of R_1, at point A, is negative with respect to that part connected to the cathode of diode D_1 and that the cathode conection of resistor R_2 to diode D_2 is positive with respect to ground. Consequently, these individual voltage drops across R_1 and R_2 or between point A and ground, oppose each other. The final rectified output voltage present across the series combination of load resistances, or between ground and point A, depends upon the relative magnitudes of the individual voltages across R_1 and R_2.

If the two rectified voltages across R_1 and R_2 are equal, the net

voltage between ground and point A is zero. If that across R_2 is not equal to that across R_1, the final voltage between ground and point A is equal to the differences of the voltages. The polarity of the voltage between ground and point A is the same as the polarity of the greater

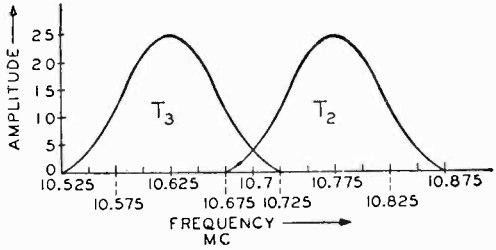

Fig. 7-23. Inasmuch as the two portions of the secondary of the discriminator transformer are resonant at different frequencies, their response curves are as shown at the right. Note that at only one frequency is the response of both circuits the same.

of the individual voltages across R_1 and R_2. The negative signs of point A and ground voltage do not mean fixed polarity. These signs are used to indicate that the two load resistances are connected into a differential circuit and that the voltages across them tend to buck each other. Either point A or ground can be positive or negative with respect to the other, depending upon the magnitudes of the voltages across R_1 and R_2.

The significant detail is that *at any one instant,* only one frequency exists in the system, and whether D_1, or D_2, or both, rectify the signal depends entirely upon the frequency of the signal voltage. Thus, if at any one instant the frequency of the signal is 10.625 mc, the circuit which responds to this frequency is T_3 (see Fig. 7-23), and rectification will take place in D_2 with the rectified voltage appearing across R_2. As a matter of fact, this is true for all frequencies from 10.525 mc to approximately 10.675 mc. Between 10.675 mc and 10.725 mc, both tubes are operative, and the differential voltage is developed between point A and ground. Between 10.725 mc and 10.875 mc only T_2 is responsive, and the signal is rectified in D_1 with the rectified voltage appearing across R_1.

Recalling that the polarities of the voltages developed across R_1 and R_2 differ with respect to ground, we then have a situation wherein voltages positive with respect to ground, which can be the zero reference point, are developed across R_2, and voltages negative with respect to ground are developed across R_1.

If we plot the output voltage developed across R_1 and R_2 respectively with respect to frequency, we secure a graph as in Fig. 7-24 (A). The response of the T_3 system is shown above the frequency reference line, because the voltage developed across R_2 is positive with respect to ground. The response of the T_2 system is below the reference line, because the voltage developed across R_1 is negative with respect to ground.

These two curves are representative of the voltages existing between point A and ground in Fig. 7-22, and, consequently, they can be combined to form a resultant over-all curve. By doing this to the curves of Fig. 7-24 (A) we obtain a resultant curve which is the typical S characteristic of a discriminator, as shown in Fig. 7-24 (B). For example, at the mean frequency of 10.7 mc the response of T_2 is the same as that of T_3, and the voltage developed across R_1 is the same as that across R_2; but, since they are of opposite polarity, they cancel, and the net output voltage from the rectifier system is zero as indicated.

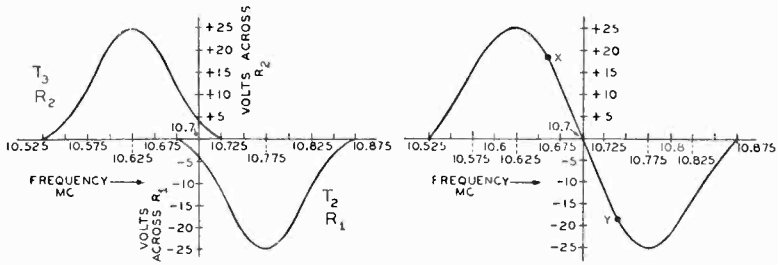

Fig. 7-24 (A), left, (B) right. If the output voltage developed across R_1 and R_2 of Fig. 7-22 is plotted against frequency, the response curves of (A) are derived. These curves can be combined, as in (B), resulting in the S characteristic of a discriminator.

Other output points are developed in similar fashion. For example, at 10.69 mc greatest response is secured in T_3 and according to Fig. 7-24 (A), the rectified voltage across R_2 is 6 volts, whereas the rectified voltage developed across R_1 is 1 volt. Since these two voltages are of opposite polarity, the net final output voltage is 5 volts as shown in Fig. 7-24 (B), and the polarity of this voltage is positive with respect to ground, because the greater response to this frequency takes place across T_3. Hence the greatest rectified voltage is developed in the T_3-D_2-R_2 system.

Looking at Fig. 7-22 and Fig. 7-24 (B), we can make certain observations which will be of interest later. Here is a rectifying means whereby we can convert frequency variations into audio voltages of different amplitudes. Secondly, we see a zone of operation wherein a uniform change in frequency results in a linear output; this is over the straight portion of the curve between X and Y. Thirdly, we realize that to secure a linear output the frequency excursions should not exceed the linear portion of the discriminator characteristic. These curves are used only for illustrative purposes and do not typify circuits used in present-day receivers in which the linear portion of the tubes is 75 kc or greater.

It might be well at this time to assume a signal of constant amplitude across the primary of a double tuned discriminator transformer, and to establish the manner in which the discriminator action produces the variable amplitude audio output. This is indicated in Fig. 7-25, wherein the operation of the circuit is assumed to be over the linear portion of the discriminator characteristic curve, which in this example is about 50 kc on either side of the center frequency. In Fig.

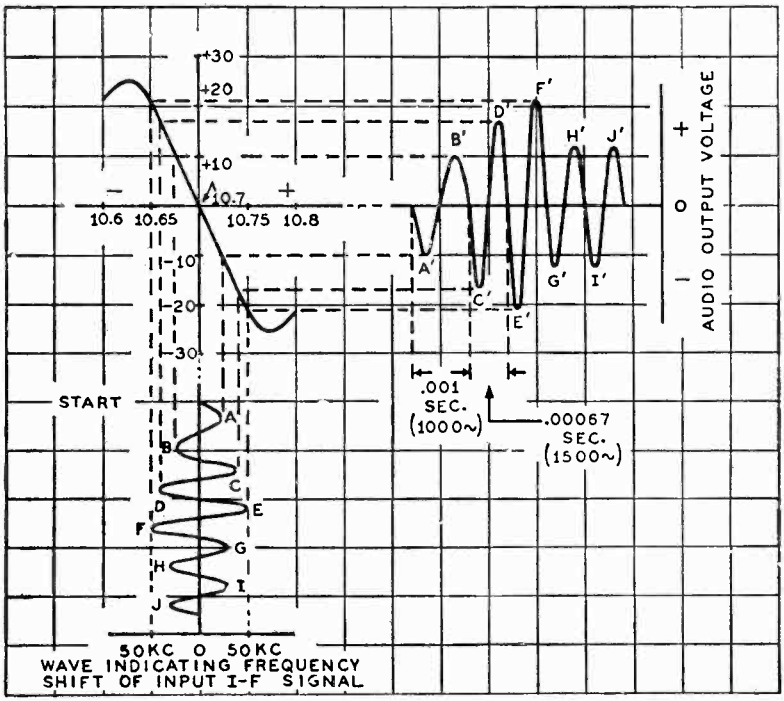

Fig. 7-25. The action of the double tuned discriminator circuit of Fig. 7-22 in converting the frequency variations of the signal shown at the lower left into a corresponding a-f signal of varying amplitude at the upper right.

7-25, we have a wave indicating the frequency shift of the incoming i-f signal. This wave at the lower left side of the drawing *is not* an i-f signal as pictured in other parts of the text. The true input i-f signal to the discriminator is constant in amplitude but varying in frequency. To show these frequency changes in the f-m signal, another wave is plotted which indicates the changes in frequency. The variation in amplitude of this new wave indicates the changes in frequency at different instances of time.

Suppose that we apply to the discriminator tube an f-m signal of i.f. constant in amplitude with a maximum deviation of 50 kc each side of 10.7 mc, which is considered the center frequency of the signal. Following the plotted points in Fig. 7-25, you will note that the output voltage from the discriminator is zero when the input signal is of the same frequency as the mean of the complete range covered by the discriminator response, namely 10.7 mc. The reason for this was explained in connection with Figs. 7-23 and 7-24 (A) and (B).

With the frequency of the input signal changing, we note that the first deviation is in the positive direction, that is the frequency increases to an extent indicated by *A*, and, at its maximum, the increase is equal to 25 kc. Since the design of the discriminator is such that when the frequency increases a negative voltage is developed in the output, we have, therefore, a change in output voltage from zero to minus 10 volts. If we show this output voltage with respect to a zero voltage reference line, we reach the peak negative voltage *A′* in the audio output curve. From *A* in the input signal curve, the frequency deviation decreases, and there is a corresponding decrease in the output voltage. Since the change in frequency is still within the plus zone, the output voltage is still negative until it reaches zero. The frequency of the input signal continues to change, but this time in the downward direction, and the design of the discriminator is such that when the frequency of the input signal is less than the center frequency, the output voltage is of positive polarity, and for the maximum frequency deviation of 25 kc in the downward direction indicated as *B*, the peak audio voltage is developed in the positive direction as indicated at *B′*.

At this point the deviation in frequency of the input signal starts to decrease, and the audio output likewise decreases; but the deviation is still such that the frequency is less than the mean, so that the audio output voltage is still positive in polarity and, therefore, is shown above the zero reference line. When the frequency deviation of the input signal again is zero, the audio output voltage also becomes zero, and a complete audio cycle has been completed. This cycle of audio voltage is identified simply for the sake of illustration as 0.001 second, meaning that it is a single cycle of a 1000-cycle note.

The second audio cycle, which has been chosen at a higher audio frequency, is plotted by following the frequency deviation curve of the input carrier; at *C* it represents a deviation of 40 kc in the upward direction, and a negative voltage of slightly less than 18 volts is produced as shown at *C′*. In the downward direction the frequency deviation likewise is 40 kc, and the peak is shown at *D*. The equivalent point along the discriminator curve establishes the output voltage peak *D′*. The remaining cycles of the output are developed in the same manner.

Abandoning the double tuned discriminator shown in Fig. 7-22 for the present, we next discuss the center-tapped secondary type of discriminator actually employed in commercial circuits. Strange as it may seem, considering the foregoing lengthy discussion, the double tuned type is not in actual commercial use. It is more difficult to align, and the transformers are more critical in design than those used in the center-tapped discriminator. However, the operation of the diodes, including the audio voltage developed across the load resistance and the S characteristic of the discriminator, is the same for the double tuned circuit and the center-tapped types, so that the discussion of Figs. 7-24 (B) and 7-25 can be applied to the commercial variety of discriminators. In fact, discussion of some of the general details of interest associated with Fig. 7-25 has been reserved until after the operation of the center-tapped transformer discriminator and wherein it differs from the double-tuned circuit has been explained. It will be seen that the difference between the two is essentially in the tuned circuit arrangement.

The Phase Discriminator

Almost exclusively, f-m receivers employing limiter-discriminator networks use the Foster-Seeley type of circuit, which is also known as the phase discriminator, the center-tapped secondary discriminator, and the center-tuned type of discriminator. This circuit appears in Fig. 7-26. What is the difference between this circuit and that shown in Fig. 7-22? A tuned primary circuit appears in both. However, the two tuned secondary circuits used in Fig. 7-22 have been replaced by a single tuned circuit with a center tap. Two diodes and two load

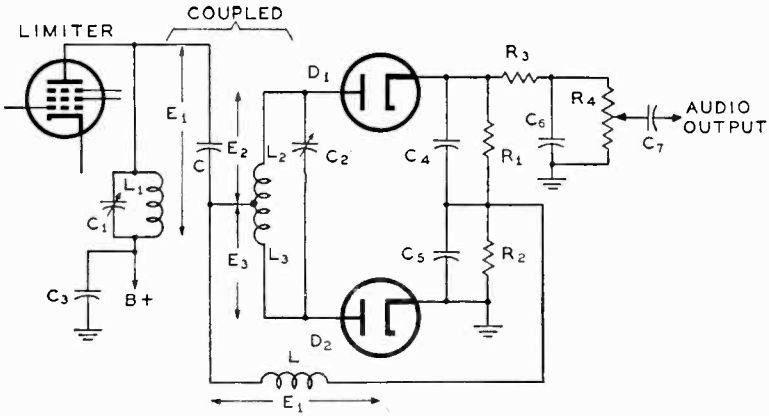

Fig. 7-26. Schematic of the phase discriminator, in which the two tuned secondary circuits of Fig. 7-22 have been replaced by a single center-tapped tuned circuit.

resistors are used in both. The diode circuits of Fig. 7-26 are completed through coil L and the respective half of the center-tapped coil associated with each circuit. Besides providing the d-c paths between the diode plates and their associated cathodes, this common coil has another function which will be shown later.

Voltage E_1 is the i-f signal voltage developed across the tuned primary circuit. Examining the secondary of this i-f transformer, we note certain significant details. It consists of two windings L_2 and L_3 in series, resonated to the i-f peak by means of C_2. The center tap on the secondary winding is connected to a coupling capacitor C and, also, to an r-f choke L.

Associated with the two circuits and the r-f choke L are three voltages, designated as E_2, E_3, and E_1 respectively, the latter being virtually identical to E_1 across the i-f transformer primary. To explain these designations, it is necessary to discuss the coupling between the primary and secondary circuits of this transformer, as well as what happens in a transformer when the secondary is tapped at the midpoint.

How does this type of discriminator operate? In brief the operation can be divided into three major actions, although more conditions than just three are actually involved. However, for clearer comparison with the double-tuned discriminator shown in Fig. 7-22, it will be explained in terms of three major actions.

In the first place, although a single tuned winding is used for the secondary circuit, the center tap on this winding causes a division of the signal voltage developed in the tuned circuit across the two halves of the secondary winding, that is across L_2 and L_3. The signal voltages across these two halves are always equal to each other, irrespective of the frequency of the signal voltage fed into this circuit from the primary.

The second major consideration is that the signal voltage present across the primary winding L_1 is also present across winding L, which is common to both halves of the secondary circuit with respect to the signal voltages eventually applied to the two diodes D_1 and D_2.

The final major action is the phase relation which exists between the signal voltage across L_2, which we can call E_2, and the signal voltage across L which, because it is the same as that across L_1, is also identified as E_1; also the phase relation between the signal voltage across L_3, or E_3, and the signal voltage across L, or E_1. The function of this discriminator network with particular reference to these three actions will now be discussed in detail.

Two methods of coupling the signal from the primary to the secondary circuit are used in this system. The resonant primary is inductively coupled to the resonant secondary winding; at the same time the signal voltage E_1 across the primary is fed to the r-f winding L via

the coupling capacitor C. If the circuit of C, L, and C_5 is traced, it will be seen that L is in shunt with the tuned primary, the latter being grounded through C_3. Neither C, L, C_3, or C_5 is of a magnitude to alter the resonant conditions of C_1 and L_1, the resonant primary. Thus, with respect to magnitude and phase, whatever signal voltage exists across C_1-L_1, also exists across L. The direct connection between the coupling capacitor C and the mid-point of the secondary winding is of no consequence to the signal transfer between the primary and the secondary tuned circuits; however, it is the point to which the choke L must be connected to complete the differential rectifier circuit. Thus, the secondary system receives signal voltages in two ways: the resonant secondary receives its signal voltage by inductive coupling, and the r-f choke derives its signal voltage by means of capacitive coupling through the fixed capacitor C.

The equal voltages across each half of the secondary winding are obtained in the following manner. When a winding is tapped at the mid-point and a voltage is induced in that winding by means of a varying magnetic field, the total voltage developed across the entire winding divides between the two halves. This is logical in view of the fact that half the total number of turns exists between the center tap and one end, and half between the center tap and the other end. So, whatever the nature of the signal voltage which will be developed across the tuned secondary circuit C_2-L_2-L_3, it is possible to show that this voltage divides into two parts, that is, across each half of the winding. These voltages are designated as E_2 and E_3.

Resonance Conditions in the Phase Discriminator

Let us examine this circuit at resonance. At resonance, the frequency of the applied signal and the resonant frequencies of the tuned circuits are both the same. Since the inductances and capacitances of a tuned circuit effectively cancel each other at resonance, the circuit behaves like a resistance. In a resistive circuit the current is in phase with the voltage, so in the secondary tuned circuit the induced current, call it I, caused to flow by the induced voltage, call it E, is in phase with this induced voltage. It should be remembered that this induced voltage is effectively *in series* with the inductance and capacitance of the secondary tuned circuit.

The in-phase relationships between E and I are indicated in the vector diagram of Fig. 7-27 (A) where vectors OI and OE, the respective induced voltage and current vectors, are seen to be in phase with each other. The voltage across the primary circuit, designated as E_1 is 180° out of phase with the voltage induced into the secondary circuit. This voltage E_1 is the main voltage upon which all the other voltages are based. Consequently, this voltage is drawn as vector OE_1 along the 0° reference line.

In vector diagram, Fig. 7-27 (A), vector OE_1 is 180° out of phase with the induced voltage vector OE. Since the voltage across a pure inductance leads the current through it by 90°, the voltage drops E_2 and E_3 across the secondary coil (called reactive voltage drops because the inductance is considered to be a pure inductance containing negligible resistance) lead the current I flowing through it. This is indicated where vectors OE_2 and OE_3 are leading the induced current by 90°. This also means that the reactive voltage drop across the secondary coil is lagging the primary voltage E_1 by 90°, and vector OE_1 is seen to be leading vectors OE_2 and OE_3 by 90°. The 90° phase difference between these voltages is very important to the operation of the discriminator. It should still be remembered that this voltage E_1 also exists across coil L of Fig. 7-26 in the same phase and magnitude as that existing across the primary tuned circuit.

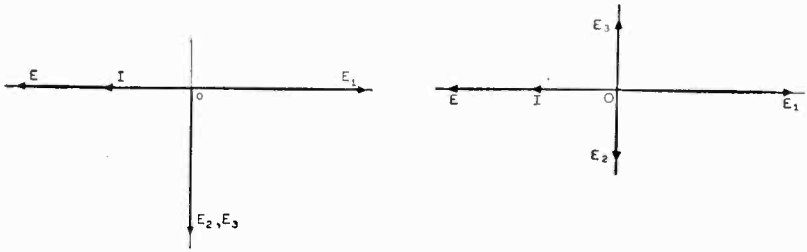

Fig. 7-27 (A), left, (B) right. Vector diagrams of the current and voltage relationships existing in the phase discriminator. Note that in (B) vector OE_3 is shifted in phase by 180° from its position in (A).

That the secondary is center tapped means that it is in a push-pull arrangement, and hence voltages E_2 and E_3 are equal in magnitude but 180° out of phase with each other, as referred to the center tap. However, the same current flows through both parts of the secondary coil, so that a 90° phase relation must still exist between each voltage and the current; but in one case one of the voltages is effectively leading the current and in the other case the voltage is effectively lagging the current by 90°. This means too that one half of the secondary voltage drop is leading voltage E_1 by 90° and the other half lagging voltage E_1 by 90°. All of this is indicated in the revised vector diagram of Fig. 7-27 (A) as shown in Fig. 7-27 (B), in which vector OE_3 of the previous vector diagram has been shifted 180°.

To demonstrate how all these voltages affect the duo-diode circuit we have redrawn that part of Fig. 7-26 appearing to the right of the secondary of the transformer in simple form in Fig. 7-28. In this figure we have made two separate circuits of the diodes, showing the respective voltages that act upon each diode. These two simple circuits then are combined to show how they actually work together.

This figure and Fig. 7-26, show that voltage E_1 is common to both diodes since it exists across the inductance L. Also, since voltage E_2 is active on diode D_1 and voltage E_3 is active on diode D_2, it is readily seen from Fig. 7-28 that voltages E_2 and E_1 are active on diode D_1 and voltages E_3 and E_1 are active on diode D_2.

Further examination of this simplified circuit reveals that the rec-

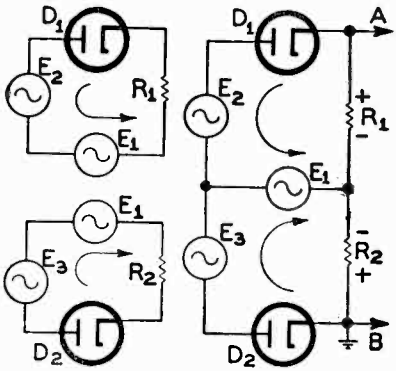

Fig. 7-28. Simplified schematics of the diodes of Fig. 7-26 and their respective load resistors. These two schematics are combined on the right, which is permissible inasmuch as the voltage E_1 is common to both diodes.

tified current flows through the individual diode circuits put certain polarities on their load resistors. Since the external current in a diode rectifier circuit flows from plate to cathode, the currents in the diode load resistors will be flowing in opposite directions, and the polarities across the individual load resistors will be bucking each other. Thus between points A and B a voltage will exist which will be the difference between the voltage drops across resistors R_1 and R_2.

If the voltages E_2 and E_3 have the *same phase angle* with respect to the voltage E_1, both diode currents will be equal in value, and the same voltage drop will appear across each load resistor R_1 and R_2. Since each resistance voltage drop is opposite in polarity to the other but equal in value, the total voltage measured between points A and B will be zero. Under these circumstances the output of the differential rectifier circuit is zero. If, however, the phase relationships between E_2 and E_1 and between E_3 and E_1 differ, a differential voltage will exist between points A and B, because the voltage drops across R_1 and R_2 no longer will be equal to each other as different currents flow through each diode.

Zero voltage exists across points A and B when the resonant frequency of the tuned discriminator i-f transformer is exactly equal to the applied frequency. This is simply indicated by the vector diagram of Fig. 7-29 where both secondary voltages have the same phase difference, namely 90°, from voltage E_1. This diagram is nothing more than a duplicate of that diagram of Fig. 7-27 (B) with the exception that the two voltages active on each diode are added *vectorially*. Thus,

in Fig. 7-29, vector OE_4 represents the resultant vector of the vector addition of voltages E_3 and E_1 across diode D_2 and vector OE_5 represents the resultant vector of the vector addition of E_2 and E_1 across diode D_1. Resultant vectors OE_4 and OE_5 are shown to be equal in

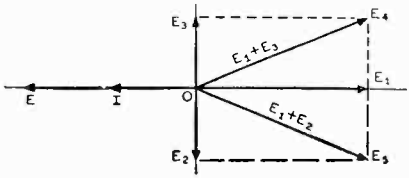

Fig. 7-29. Vector diagram of the current and voltages relationships of the circuit of Fig. 7-26 at resonance and when both secondary voltages E_2 and E_3 have the same phase difference (90°) from E_1.

magnitude, causing the same current to flow in each diode circuit. Thus, equal but opposite voltages are developed across diode load resistors R_1 and R_2, producing zero voltage between points A and B.

Applied Frequency Higher Than Resonant Frequency

When the instantaneous value of the f-m signal is equal to its center frequency component, we have the frequency applied to the discriminator transformer equaling the resonant frequency. The situation for this was discussed in the preceding section. At either side of the center frequency component of the f-m signal the instantaneous frequency is different from the resonant frequency of the i-f transformers. Under these conditions the discriminator transformer is tuned below or above the incoming i-f signal.

Let us now consider an instantaneous value of the f-m signal greater than the center i.f. The discriminator transformer then is tuned below the incoming i.f. The circuit is still the same as in Fig. 7-26, and the nonresonant conditions do not alter the fundamental rules of the action of the primary circuit, so that the voltage E_1 that exists across this circuit also exists across L in both the same phase and magnitude.

Induced voltage E in the secondary remains 180° out of phase with the primary signal, for this too is a fundamental condition which is not altered by nonresonance conditions. However, the phase relationship between the induced voltage E and the current I, which it causes to appear in the secondary circuit, is affected by the state of resonance, and in turn alters related conditions.

When the applied frequency is higher than the resonant frequency, the reactance of the secondary coil becomes greater than the reactance of the capacitor. This accords with the fundamental law that inductive reactance varies directly with frequency, and capacitive reactance varies inversely with frequency. Accordingly, a portion of the inductive reactance will be offset by the capacitive reactance, but a certain amount of inductive reactance will remain to exert a control on the

induced current. The circuit as a whole now appears as an inductance and resistance in series, rather than as a resistance alone, which is the case at resonance.

Under this circumstance the induced current I no longer will be in phase with the induced voltage E but rather will lag this voltage by a certain amount, depending upon the extent to which the instantaneous f-m signal is greater than the tuned frequency of the transformer. This is all indicated in the vector diagram of Fig. 7-30 for the off-resonance condition now being discussed. Voltages E and E_1 are still seen to be 180° out of phase but the phase relationships of the other component voltages differ somewhat from those of the vector diagram of Fig. 7-29.

For the sake of argument let us say that the difference in frequency between the instantaneous frequency of the f-m signal and the tuned i-f transformer is such that the amount of inductive reactance remaining is sufficient to cause the induced current I to lag the induced voltage E by 35°.

No matter what the phase relationship between the induced voltage and induced current, the two voltages E_2 and E_3 across the individual halves of the secondary are still 180° out of phase with each other and equal in magnitude. The induced current flowing through this secondary still bears the same phase relationship to these secondary voltages. Regardless of the phase difference between E and I, secondary voltage E_3 will still lag current I by 90°, and secondary voltage E_2 will still lead current I by 90°. This is indicated in the vector diagram of Fig. 7-30; and if this vector diagram and that of Fig. 7-29 are compared, these phase relations will be seen to hold.

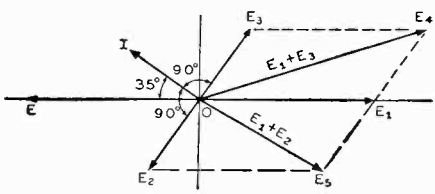

Fig. 7-30. Vector diagram of the current and voltages relationships in the discriminator when the instantaneous frequency of the f-m signal is higher than the transformer resonant frequency.

Let us further compare these two vector diagrams. To keep constant the 90° phase relations between voltages E_2, E_3, and current I, then when current I lags induced voltage E by 35°, voltage vectors OE_2 and OE_3 are both shifted 35° clockwise to keep these 90° relationships intact. The complete vector line E_2-O-E_3 is shifted 35° in a negative direction. When the respective voltages applied to the individual diodes are added under these circumstances, it will be seen from the vector diagram of Fig. 7-30 that the resultant vector OE_4 representing that voltage across diode D_2 and resultant vector OE_5 representing that across diode D_1 are no longer equal, but that vector

OE_4 is greater than vector OE_5. In this instance diode D_2 will draw the greater current, and in Fig. 7-28 load resistor R_2 will have a greater voltage drop than resistor R_1; hence a differential voltage will exist across point A to B, with point B being more positive than point A. This is the same as saying point A is negative with respect to point B.

Applied Frequency Lower Than Resonant Frequency

When the instantaneous value of the f-m signal input to the discriminator circuit is such that it is less than the resonant frequency of the discriminator transformer, the differential voltage will still exist across the diode loads, but the polarities will be reversed. Let us see how this happens.

We still are at off-resonance conditions, even though we are on the lower side of the resonant frequency, and the same 180° phase relationship between E and E_1 exists. When the applied frequency is lower than that of the resonant frequency of the i-f transformer, the impedance of the secondary of the i-f transformer is such that the capacitive reactance more than balances out the inductive reactance, and the secondary is primarily capacitive. Since this circuit is capaci-

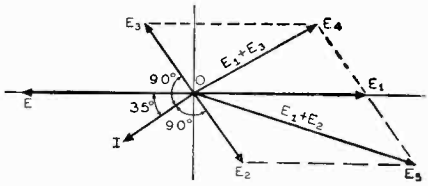

Fig. 7-31. When the instantaneous frequency of the f-m signal is lower than the transformer resonant frequency, the current I will lead the induced voltage E. Compare with Figs. 7-29 and 7-30.

tive, the induced current I leads the induced voltage E. If the off-resonance conditions are such that a phase angle of 35° again exists between I and E, I will be *leading* E by 35°, as seen in the vector diagram of Fig. 7-31. Since the 90° phase relations between voltage E_2 and current I, and voltage E_3 and current I must still exist, these two voltages are effectively shifted in phase 35° in a counterclockwise or positive direction. This is indicated in Fig. 7-31 where vectors OE_2 and OE_3 are still 180° out of phase with each other, but no longer 90° out of phase with vector OE_1. Now when the individual i-f voltages across the diode circuits are combined vectorially, it will be seen that resultant vector OE_5 applied to diode D_1 is greater in magnitude than resultant vector OE_4 applied to diode D_2. Therefore, the current in the circuit of diode D_1 is greater than the other diode current. This means a greater voltage drop exists across R_1, the load resistor of diode D_1, than across R_2, the load of D_2, and a differential voltage exists between points A and B of the diode circuit of Fig. 7-28. However, under these conditions the polarity of point A will be more positive with respect

to the junction of R_1 and R_2 than point B. That is, point B is negative with respect to point A.

Summarizing the action described, it is evident that if a varying frequency input signal (one which varies in frequency around a mean) is applied to the discriminator network — provided that the range of frequencies covered is not beyond the acceptance bandwidth of the discriminator transformer — an output signal which changes in amplitude and polarity will be obtained. The output signal is determined by the frequency deviation; the less the frequency deviation, the less the departure from a 90° phase relationship between the reactive voltages E_2 and E_1, and also E_3 and E_1. The greater the frequency deviation, the greater is the difference in angular displacement between E_2 and E_1, and E_3 and E_1, so that the differential voltage obtained from the diodes is greater. When viewed from the angle of audio intensity, the greater the differential voltage from the rectifiers, the louder the audio signal, since the extent of deviation at the transmitter is a function of modulating voltage level. The greater the modulating voltage level within prescribed limits, the greater the frequency deviation.

In brief, then, the differential output voltage is a function of the rate of deviation of the f-m signal as well as the amount of frequency deviation. Since the *amplitude* of the audio modulating signal determines the amount of deviation and since the *frequency* of the audio determines the rate of change of the deviation of the f-m signal, it becomes readily apparent that the differential voltage across the two diodes will be an audio signal equal in frequency and proportional in amplitude to the audio modulation signal.

The output characteristic curve of this discriminator network is the same S-shaped curve discussed in relation to the previous circuits and shown in Fig. 7-25. It is desired that this curve be linear for at least 75 kc on either side of its center point. That is, it should be linear over the maximum 75-kc peak deviation of the f-m signal in order to avoid distortion. In fact, the greater the linearity (within reasonable limits) the better, and an over-all 200-kc linearity is considered very desirable. This accomplishes two things: Firstly it means that the receiver does not have to be tuned very accurately for the resting frequency to fall in the middle of the discriminator characteristic. If the receiver is mistuned somewhat, no distortion will result provided the receiver is not so badly mistuned that the frequency variations in the signal extend into the nonlinear or curved portions of the discriminator characteristic. Secondly, the fact that the characteristic of the discriminator is linear over a greater range than that actually required means that the linearity will be more nearly perfect over the center portion which is actually used in reception. The high degree of linearity ob-

tained in this way makes demodulation of the signal possible with practically no distortion.

In Fig. 7-26 a resistor capacitor combination consisting of R_3 and C_6 appears in the output circuit of which no mention has yet been made. As will be recalled, in chapter 4 we discussed pre-emphasis and de-emphasis networks in conjunction with the proper level for all audio frequencies. This R_3 and C_6 combination is the standard form of de-emphasis network that usually appears at the output of the detector network. The potentiometer R_4 controls the amount of audio signal to be coupled to the audio amplifiers through coupling capacitor C_7.

Modification of the Phase Discriminator

While we are on the topic of circuit construction, it might be well to state that there are some modifications of the discriminator detector circuit which appears in Fig. 7-26. Some of the more common types of

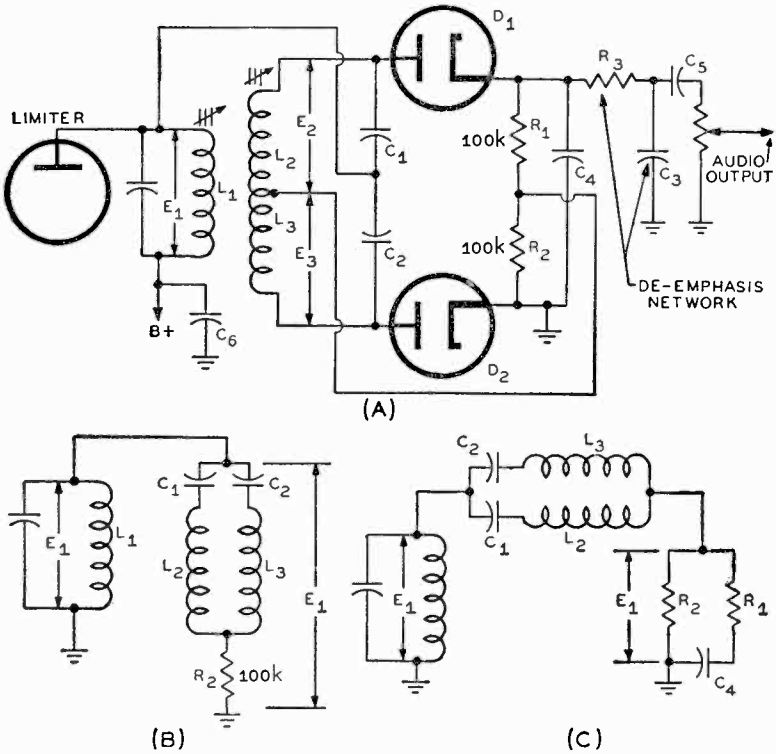

Fig. 7-32. Schematic of a modification of the phase discriminator circuit is shown in (A) and simplified schematics of this circuit are shown in (B) and (C). Note that coil L which appeared in Fig. 7-26 is omitted.

such modified circuits do not use any choke in coupling the voltage across the primary inductance to the diodes. A typical circuit of this sort appears in Fig. 7-32 (A). From this drawing it is not readily apparent how voltage E_1 across the primary inductance L_1 is coupled to the diode circuits. Comparing this diagram with Fig. 7-26, it will be noted that the choke L does not exist in the circuit now under discussion. Regardless of this fact, the voltage E_1 is introduced into the diode circuits.

If we trace the circuit from the top of L_1 we can take two paths: through C_1 and L_2 or through C_2 and L_3. Since the circuit is balanced, L_2 is equal to L_3, and C_1 is equal to C_2, and it is of no importance which path we take. For the sake of illustration we will choose C_2 and L_3 and the path ending with resistor R_2 to ground. The C_1 and L_2 path could likewise end with resistor R_2 to ground. Consequently we can redraw these circuits and see how voltage E_1 is injected into this part of the network.

This simplified drawing is shown in Fig. 7-32 (B), where C_1 and L_2 are in series as well as C_2 and L_3 and the two series circuits are in parallel with each other. This complete parallel circuit is in series with R_2. Therefore, the voltage E_1 also appears across this circuit as shown since the circuit is shunted across L_1. One end of L_1 is grounded for the i.f. through a bypass capacitor C_6. However, at the frequency of the i-f input signal, L_2 and C_1 are in series resonance, and so are L_3 and C_2, so that each series resonance combination is a very small resistance. Therefore, the impedance of the complete parallel circuit is so low compared with the resistance of R_2, which is typically 100,000 ohms, that practically all of E_1 is considered to be across R_2 in the same phase and magnitude as that existing across L_1. Since R_2 is the load resistor of diode D_2 this resistor, besides serving as the diode load, also serves to apply voltage E_1 to diode D_2.

So much for E_1 being applied to D_2. But how about also getting E_1 across D_1? This also can be easily shown by taking the path of R_1 and C_4 to ground instead of only R_2 to ground. Since the rest of the traced circuit remains as just discussed, E_1 also appears across the series combination of R_1 and C_4. However, since the reactance of C_4 is much smaller than R_1, which is equal to R_2, all of E_1 appears across R_1 as well as across R_2. Consequently, R_1 serves the same purpose as R_2 in being used as a load resistor and for applying E_1 to D_1. The complete picture of how E_1 appears across both resistors R_1 and R_2 is illustrated in the over-all simplified drawing of Fig. 7-32 (C). In this drawing the components that have negligible reactance compared with the resistance of R_1 and R_2 are drawn so that E_1 appears to be present across both R_1 and R_2.

Another type of modified discriminator uses the diode sections of a duo-diode high-mu triode tube. The 6AQ7-GT which is used by Gen-

eral Electric in some of its f-m receivers is such a tube. The diodes in this tube can be used as a discriminator, because a separate cathode is used for the diodes and another for the triode section. A schematic of the tube appears in Fig. 7-33 (A), and a circuit diagram of how the diode sections are used as a discriminator is shown in Fig. 7-33

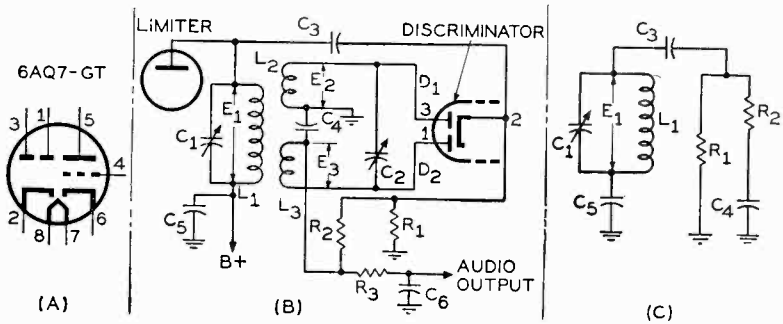

Fig. 7-33. The 6AQ7-GT duo-diode triode tube (A) can be used in the discriminator circuit (B) as it has one cathode for the diode plates and another cathode for the triode. A simplified schematic of the parallel circuits which appear across the transformer primary circuit is shown in (C).

(B). The chief difference between this circuit and the conventional discriminator is the method of applying reference voltage E_1 to both diodes D_1 and D_2. Coil L_2, and thus voltage E_2, are common to the upper diode D_1, and coil L_3 and voltage E_3 are common to the lower diode D_2. Capacitor C_4 connecting L_2 and L_3 is of high enough capacitance, so that both coils are effectively in series to the i.f. As with the conventional discriminator, capacitor C_2 is shunted across these two coils and with them forms the secondary tuned circuit. This analysis reveals how the respective induced voltages E_2 and E_3 are applied across the individual diodes D_1 and D_2, but the method of obtaining E_1 across both diodes is not readily evident.

Tracing the d-c path for each diode, we find that resistor R_1 is the load for D_1 and resistor R_2 is the load for D_2. The reference voltage E_1 is capacitance coupled through C_3 to the common cathode of the diodes. Capacitor C_5 is a bypass capacitor for the primary tuned circuit and completes the r-f path to ground. The reactance of C_5 at the i.f. is so small that negligible i-f voltage appears across it.

If we trace the i-f path from the top of L_1, we find that there are essentially two parallel paths which appear across the primary circuit to ground. This circuit is shown in simplified form in Fig. 7-33 (C). Going from the top of L_1 we pass through C_3, and find two paths available: one through resistor R_1 to ground and the other through resistor R_2 and capacitor C_4 to ground. The capacitances of C_3 and C_4 are so chosen that they will offer a low reactance at the i.f. compared

with the resistance of R_1 and R_2. This means that practically all of E_1 also appears across R_1 and R_2. So far as the high-frequency i.f. is concerned, R_1 and R_2 are both effectively in parallel with L_1, and the reference voltage E_1 also appears across the load resistors R_1 and R_2.

Since R_1 is the load resistor for D_1, both voltages E_1 and E_2 act on diode D_1; and, since R_2 is the load resistor for D_2, both E_1 and E_3 act on diode D_2. The on and off resonance conditions function as in the conventional discriminator. The audio output appears across C_4 or between the high side of R_2 and ground. In this circuit, resistor R_3 and capacitor C_6 represent a de-emphasis network, and the de-emphasized audio is taken across C_6. The triode section of the tube is used as the first audio voltage amplifier.

An F-M Tuning Indicator

A while back we discussed how the limiter grid voltage was used as a source of tuning indication in f-m receivers employing limiters, even though certain disadvantages were prevalent. Ordinary indicator tubes, such as the 6E5 or 6U5 commonly used for a-m receivers,

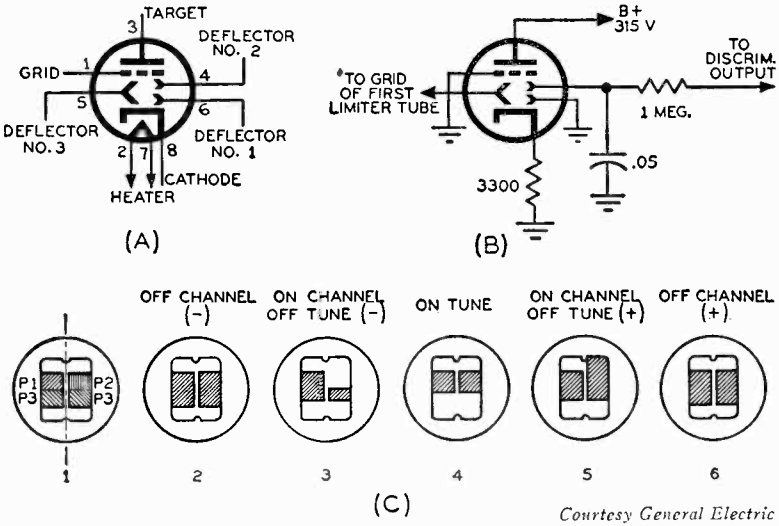

Courtesy General Electric Co.

Fig. 7-34. The schematic (A) of the 6AL7-GT visual tuning indicator tube and how it is connected in an f-m receiver (B) employing a limiter. In (C) are shown various target patterns under different conditions of discriminator output.

served this purpose. In late 1946 the General Electric Company released a new tuning indicator[3] which worked on cathode-ray principles and was ideally suited for f-m receivers, although it can also

[3] F. M. Bailey, "An Electron-Ray Tuning Indicator for Frequency Modulation," *Proc.*, IRE, p. 1158, vol. 35, October 1947.

be used on a-m receivers. This type tube is known as a 6AL7-GT, a schematic of which appears in Fig. 7-34 (A).

This tube can make use of both the discriminator output voltage and the limiter grid voltage. It can be used satisfactorily with just the discriminator voltage alone, but it then is not able to distinguish whether the receiver is on tune or off channel. For, when the discriminator output voltage is used alone, the pattern for on tune or off channel is the same, because the discriminator output voltage is zero in both cases.

The tube is made sensitive enough to respond to a voltage difference between plus and minus 0.2 volt with respect to ground; this is within 2 kc of the discriminator tuning for distortionless signals. This discriminator output is connected to one side of a center divided deflector [deflector No. 2 in Fig. 7-34 (A)]. A space-charge grid is used to increase the sensitivity of the tube. The deflector is so divided to form a method whereby the deflection of one half of the pattern can be compared with the other half. The other half of the divided deflector is usually grounded [deflector No. 1 in Fig. 7-34 (A)], providing a reference pattern with which the pattern due to deflector No. 2 may be compared.

Since one side of the discriminator load is usually grounded, the changing discriminator output voltage appears across both these deflector electrodes. On one side of the cathode is placed this divided deflector, and on the other side another deflector is placed to form a fixed boundary for one side of the pattern [deflector No. 3 in Fig. 7-34 (A)]. The first limiter grid (if more than one limiter is used) is connected to this electrode, and the limiter voltage therefore appears on this deflector and is used as a voltage which determines one boundary of the target pattern. This deflector enables us to distinguish, by different patterns, when the receiver is on tune or off channel. A circuit diagram of how the tube is usually wired for operation in conjunction with a limiter and discriminator is shown in Fig. 7-34 (B).

In Fig. 7-34 (C) are illustrated the target patterns under different conditions of discriminator output. In pattern 1 four squares are shown where P_1, P_2, and P_3 are produced and controlled by deflection electrodes No. 1, 2, and 3 respectively; there are two P_3 squares. Patterns 2 and 6 are for minus and plus off-channel conditions respectively. These patterns are identical, because there is zero voltage output from the discriminator and no limiter voltage. The size of squares P_3 is controlled by the amount of limiter voltage; the higher this negative voltage the smaller the squares, and the lower the negative voltage the larger the squares. Consequently, in patterns 2 and 6 the bottom half is of maximum depth due to the absence of limiter voltage.

In pattern 4 the receiver is on tune, which means a maximum negative limiter voltage and a zero discriminator output voltage. Thus the

pattern is much smaller than those off-channel patterns of 2 and 6. The decrease in pattern No. 4 is seen to be in the bottom half due to the limiter voltage.

In patterns 3 and 5 where the discriminator is off tune, limiter voltage, although perhaps not a negative maximum, is still present, limiting the bottom half of the patterns to a smaller size as compared with the patterns of 2 and 6. In pattern 3 the discriminator is off tune and presents a negative signal to the No. 2 deflector grid, making square P_2 reduced in size. In pattern 5 the discriminator is also off tune and presents a positive signal to the No. 2 deflector grid, making square P_2 increased. You will note that the deflection due to the positive off tune signal is greater than the deflection for the negative off tune signal under the same amount of positive and negative discriminator voltages. This is a result of the use of space-charge operation of the deflecting system (due to the space-charge grid). Deflection in the positive region would be much greater if a cathode bias resistor [3300 ohms as seen in Fig. 7-34 (B)] were not used. This resistor places a positive voltage on the cathode with respect to the deflectors and the space-charge grid, so that with a positive discriminator signal the deflectors do not draw appreciable current.

The negative bias on the space-charge grid reduces the brightness of the pattern and increases the deflection sensitivity.

THE RATIO DETECTOR

In previous discussion on the discriminator detector circuits it was indicated that a limiter was necessary to produce an input f-m signal to the discriminator that was constant in amplitude. The limiter is needed because the discriminator responds to amplitude changes in the signal as well as to frequency changes. To dispense with a separate limiter tube, a new f-m detector system, *the ratio detector,* was developed that responded to frequency changes only and not to amplitude changes in the input system. Although its operation is different from that of the discriminator detector, it is nevertheless somewhat similar in circuit analysis. This will be seen as we progress with the analysis of the detector.

Simplified Ratio Detector

To understand fully the operation of a typical ratio detector circuit let us first study a simplified version of such a circuit as illustrated in Fig. 7-35. From this diagram we notice one thing that is common to all ratio detector circuits, namely, that the two diodes used are wired in *series aiding* with respect to the load instead of *series opposing* as in the discriminator detector circuit. By tracing the circuit it will be found that the plate of one diode is connected to the cathode of the other diode through the secondary of the transformer. The plate of

the latter in turn is connected to the cathode of the former diode through a battery. Compare these connections with that of the discriminator detector in Fig. 7-26, and the difference will be immediately apparent. This difference in circuit arrangement of these two detectors is one quick method of telling them apart.

Coming back to Fig. 7-35, we find that the transformer network in conjunction with C and L is similar to the discriminator detector arrangement in that the voltage across the primary, L_1, is also across L. This voltage in conjunction with the individual voltages across L_2

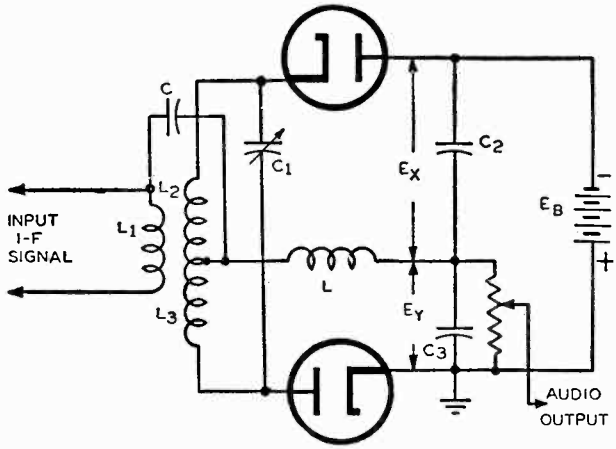

Fig. 7-35. Simplified schematic of the ratio detector. In this circuit the diodes are series aiding with respect to the load instead of series opposing as in the discriminator detector circuit.

and L_3 is effectively on each respective diode. Across the output of this circuit appear two capacitors C_2 and C_3 and in parallel with them a battery of fixed voltage, E_B. In the discriminator detector, besides two capacitors, two resistors also existed, across which the differential output voltage was developed. However, when any amplitude changes occurred in the input signal to the discriminator detector, the output voltages across each resistor changed, making the differential output voltage different, indicating that the detector was responsive to a-m signals as well as to f.m.

In the simplified ratio detector circuit of Fig. 7-35, the voltage from diode to diode in the output side of the circuit is maintained constant at E_B by the voltage of the battery. Consequently, the total voltage across capacitors C_2 and C_3 will always be equal to E_B. According to the polarity of the battery connection, no current will flow in the circuit until a signal is applied. The d-c path of this output circuit is through the battery, and the a-c path through the two capacitors C_2 and C_3. When an f-m signal is detected by this arrangement, the individual voltages E_X and E_Y across capacitors C_2 and C_3 respectively, will be constantly changing due to the change of deviation of the f-m signal, *but* their sum will be constant due to the battery voltage E_B.

At all times $E_B = E_X + E_Y$. Since the values but not the sum of E_X and E_Y can change, it is their *ratio* which will be constantly changing, and by placing a potentiometer across C_3 the audio modulation of the f-m signal can be tapped off this resistance. This will all be clearer when a typical ratio detector circuit is analyzed.

Any amplitude variations in the input signal will not appear across either C_2 or C_3 as changes in voltage due to the constant voltage across the output due to the battery. It is only *frequency* changes which appear across both capacitors. This is different from the discriminator detector circuit, where both amplitude and frequency changes were recorded as voltage changes across the load *resistors*. This simplified form of the ratio detector was analyzed first because through the use of the battery we were easily able to show the fixed voltage across the output and why this detector responds only to frequency variations.

Practical Ratio Detector

The use of a battery for constant voltage output in the ratio detector for f-m receivers is not practical because, due to the nature of the incoming f-m signals, we desire to have the output voltage constant only at the average strength of the incoming signal. Since the carriers of the different f-m stations are not all of the same strength and also since the effective strengths of the individual carriers at the receiver change, it was found that the best thing possible was to have a rela-

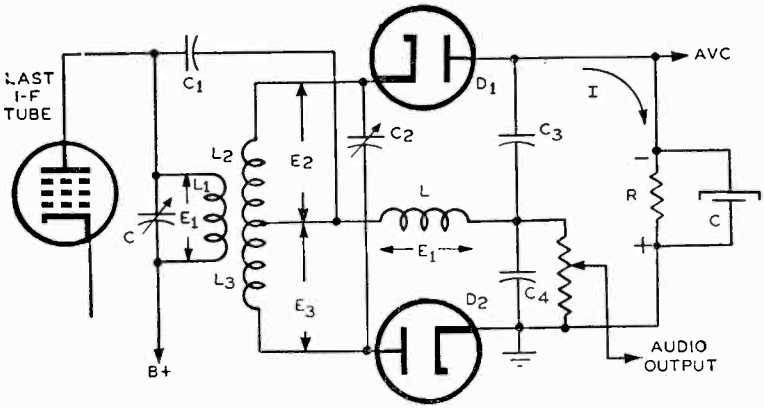

Fig. 7-36. A typical ratio detector circuit. Note the similarity to the discriminator detector.

tively constant voltage across the output determined by the average value of the incoming signals. This was accomplished by placing a parallel *RC* network in the output of the circuit instead of the battery, as shown in the typical ratio detector circuit of Fig. 7-36. Let us now

study this circuit in conjunction with the new *RC* output circuit, and the over-all action of this detector will become apparent.

This new circuit is very similar to the discriminator detector arrangement in many ways. For instance, the voltage E_1 can be considered as effectively the same, even though it is not obtained from the limiter. In both circuits the signal is of the i.f. This voltage E_1 is coupled to the rest of the circuit in two ways: by induction into L_2 and L_3 and by capacitive coupling across C_1 to L and C_4. The reactances of C_1 and C_4 at the i.f. are negligible compared with the reactance of the choke L. Consequently, the voltage drop across L is likewise E_1 as seen in Fig. 7-36. Depending on the degree of coupling between the primary tuned circuit and the secondary tuned circuit, a certain amount of voltage is coupled across each half of the center-tapped secondary. So far as voltages E_2, E_3, and voltage E_1 across L are concerned, they all function in *exactly* the same manner as the corresponding voltages in the discriminator detector circuit of Fig. 7-26. This is true, too, for the vector diagrams of Fig. 27 (A), (B) and Figs. 7-29 through 7-31 with respect to the applied voltages to the individual diodes during the constant frequency changing of the incoming f-m signal. Thus, the same phase shifting process is employed in the ratio detector circuit.

Examining Fig. 7-36 once more, it is evident that since the diodes are connected in series aiding they draw current in the same direction relative to R, which is also in series with them. Consequently, using the convention for the flow of electrons from cathode to plate, the current I will follow the path indicated by the arrow and the top part of resistor R will become negative with respect to its bottom or grounded end. If the primary and secondary tuned circuits are both resonant to the i.f. and if an unmodulated i-f carrier signal (of the same frequency) is injected into the circuit from the i-f amplifier, the two capacitors C_3 and C_4 both will be charged to the same voltage due to the symmetry of the circuit.

Now if the i-f carrier were frequency modulated, the voltages appearing across capacitors C_3 and C_4 would vary according to the modulation of the i-f carrier. This happens as follows: It was mentioned that rectified current would flow in the direction shown in Fig. 7-36 and that the top portion of the resistor R would have a negative potential on it. The values of the resistor R and capacitor C are so chosen that they represent a long time-constant network. Usually the value of this time-constant network can vary anywhere between one-tenth and one-quarter second and still be effective to the desired degree. (The value of the resistance in megohms multiplied by the capacitance in microfarads will indicate directly the value of the time constant in seconds). Consequently, with a long time constant, it will take the capacitor C quite some time to discharge fully

through R. Therefore, the negative voltage at the top of resistor R will remain practically constant over the range of the lowest audio frequency desired to be reproduced in the output of the set. In other words, a time constant of one-tenth of a second corresponds to the period of a frequency of 10 cycles per second; therefore, for frequencies above 10 cycles per second, the duration of one cycle would be shorter than the time constant, and so the voltage across the R-C combination will remain practically constant. (The higher the audio frequency, the shorter the duration of one cycle.)

Since the voltage across R and C is constant, the sum of the voltages across C_3 and C_4 must remain constant. However, if the carrier frequency falls below, or rises above, the i.f., the voltages appearing across C_3 and C_4 will differ in value according to the degree of off-resonance condition of the i-f signal. No matter what the difference between these voltages, their sum always remains the same, but their ratio will be varying at the rate of the deviation of the f-m signal, and it is this change in ratio which is detected. If the i-f signal is frequency modulated, the i.f. will vary above and below its resonant frequency according to the degree of f.m. This accordingly will vary the voltages appearing across C_3 and C_4, but in a certain proportion determined by the potential across the RC combination. Consequently, it can be said that the voltage across C_4 varies at an audio rate (due to the degree of f.m.) Therefore, the a-f output may conveniently be taken off across C_4, because one side is grounded, and applied to the audio section of the set. The instant when the incoming f-m i-f signal is at the exact resonant frequency of the tuned circuits of Fig. 7-36, the a-f voltage across C_4 will be zero. At instantaneous frequencies of the incoming f-m i-f signal above and below the resonant frequency of the tuned circuits, the voltage across C_4 will vary at a rate determined by the changing frequency of the f-m signal. Since the f-m signal is changing, or is being deviated, at an audio rate (that is, at the rate of its modulating signal), the output voltage across C_4 will be varying at an audio rate. In this type of circuit the voltage appearing across C_3 will be larger than that across C_4 at frequencies below i.f., and above the i.f., the voltage across C_4 will be larger than that across C_3.

The basic part of the ratio detector that removes any a.m. appearing in the input is the R-C time constant network of Fig. 7-36. It is the constant voltage across resistor R and capacitor C that plays the primary role in the removal of a.m. Let us suppose that an a-m signal appears at the input of the ratio detector and see what happens:

Any a-m signal will tend to increase the voltages across capacitors C_3 and C_4. However, the voltage across the RC network cannot change rapidly enough to follow the a.m., due to the nature of the long time constant, and the a.m. therefore, cannot change the voltage across C_3

and C_4. In other words, the capacitor C charges or discharges so slowly through R that the potential at the top of resistor R (or the plate of diode D_1) remains nearly constant and any a.m. cannot change the voltage across capacitor C in step with this a.m. Consequently, sudden increases in amplitude of the f-m carrier will not have any effect in the output audio circuit, because these sudden increases of amplitude cannot appear across either C_3 or C_4 as a change in voltage.

AVC From Ratio Detectors

In the limiter discriminator arrangement, avc voltage was available in the grid circuit of the limiter due to grid rectification action. In the ratio detector system, since limiters are not employed, the avc is obtained from some other place. In the ratio detector circuit of Fig. 7-36 it is noticed that the voltage across resistor R serves as a means of obtaining avc voltage. Since the time constant network of RC is made to produce a constant output voltage at the average strength of the incoming signal, it is readily evident that this output voltage will change in accordance with the varying average strength of the incoming signal.

What this means is that the capacitor C in conjunction with resistor R averages these signal strength changes appearing across R. The time constant is not considered large in this instance as compared with the length of time required for changes in average signal strength. However, the effect of the time constant is sufficiently large to produce effective removal of sudden changes in a.m., including that brought about by the response characteristics of the i-f stages. This is possible because the input signal does not change in strength as rapidly as these other amplitude variations, and the RC combination permits *slow* changes in voltage in accordance with slow changes in the received signal. Therefore, the negative voltage at the top part of resistor R serves as a source of avc voltage.

Other Ratio Detector Circuits

Although the ratio detector circuit of Fig. 7-36 is very typical of those in use today, there are enough variations in this type of circuit to warrant separate consideration. The most difficult part in the design of this type of circuit is the ratio detector transformer, namely that comprising coils L_1, L_2, and L_3 in Fig. 7-36. It is beyond the scope of this book to go into such design work, but it should be remembered that such factors as the proper coupling between windings, the respective Q's of the coils both during diode unloaded and loaded conditions, and the gain of the last i-f stage are important in this transformer design.

Although it may not be immediately apparent, Fig. 7-37 illustrates

a type of ratio detector circuit which is a modification of that in Fig. 7-36. As in all the detector circuits discussed so far, the primary problem in this new circuit is in getting voltage E_1 which is across L_1 to also appear across both diodes. This voltage across the diodes must be either in phase or 180° out of phase with that across L_1. Unless something is known about the construction of the transformer comprising coils L, L_1, L_2, and L_3, it is somewhat difficult to understand this circuit. It should be known first that, due to inductive coupling, voltages E_2 and E_3 appear across L_2 and L_3, respectively, as in other types of detectors. The special thing that should be known is that coil L, which has only a few turns, is a separate winding usually closely wound around or near the bottom or $B+$ side of coil L_1. In this manner the

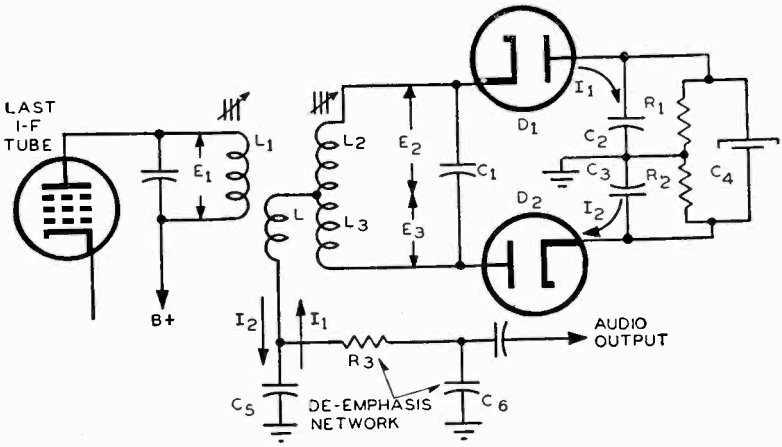

Fig. 7-37. A modified ratio detector circuit in which the coil L receives its voltage by transformer action from the coil L_1.

coupling between these two coils is a maximum, and practically all of voltage E_1 appears across this coil and series capacitor C_5 to ground. Since L is untuned, the voltage induced into it from L_1 is 180° out of phase with E_1. The voltages E_2 and E_3, as just pointed out are in quadrature with E_1. Therefore, these two voltages are also in quadrature with the voltage across L, as required. Resistor R_3 and capacitor C_6 represent the conventional de-emphasis network.

The basic operation of this circuit can now be understood, especially if we consider the ground side of capacitor C_5 being connected to the junction of C_2 and C_3 which is also grounded. In this manner it can be easily seen that both diode i-f currents flow through L and C_5 but in opposite directions. The current through diode D_1 represented by I_1 flows from its cathode to the plate, then through C_2 to ground, then through C_5, L, L_2, and back to the cathode of D_1. The current through diode D_2, represented by I_2, flows from its cathode to plate, then

through L_3, L and C_5 to ground, then through ground to C_3, and back to the cathode of D_2. All of which is indicated by the arrows of current flow. It will be seen that the net diode current flow through L and C_5 will be zero, and no voltage drop will be present across C_5 when the instantaneous i.f. is at the resonant frequency of the transformer.

When the instantaneous frequency of the incoming signal is different from the resonant frequency of the tuned circuits, currents I_1 and I_2 will differ from each other, and a potential drop will exist across C_5. The value of the voltage drop depends upon the difference in diode currents I_1 and I_2, which in turn depends upon the amount of difference between the instantaneous frequency of the incoming signal and the resonant frequency of the tuned circuit. Since the input signal is frequency modulated and the amount of frequency deviation on either side of the center frequency and the rate of deviation are determined by the amplitude and frequency of the audio modulating signal, the voltage drop across C_5 will vary in accordance with this audio modulating signal. The varying difference between I_1 and I_2 thus produces a proportionally varying voltage drop across C_5, and since this varying difference in current is determined by the rate and amount of deviation of the f-m i-f signal, the voltage drop across C_5 varies at the

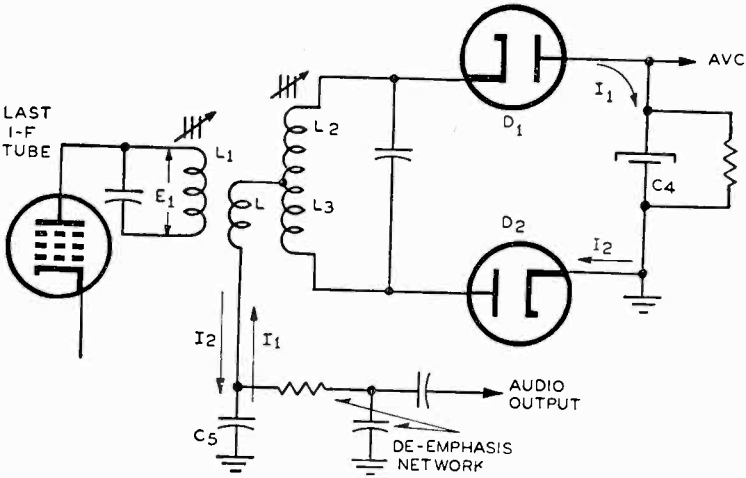

Fig. 7-38. A modification of the circuit of Fig. 7-37: C_2 and C_3 have been removed from the circuit and the cathode of the diode D_2 is now grounded. The coil L is again inductively coupled to L_1.

audio modulating signal. Consequently, the voltage across C_5 is used as the source of audio signal for the following audio amplifiers.

Another ratio detector modification is illustrated in Fig. 7-38. Comparison of this circuit with Fig. 7-37 discloses two differences: C_2 and C_3 of Fig. 7-37 have been eliminated and the cathode of diode D_2 is

now grounded. With this arrangement it is still possible to apply the voltage across L to both D_1 and D_2. The coil L in Fig. 7-38 is still inductively coupled to L_1, and consequently a voltage 180° out of phase with E_1 appears across it as in Fig. 7-37.

However, in Fig. 7-38 the voltage is applied to D_2 by taking the path from the plate of D_2 through L_3, L, and C_5 to ground, then through ground and back to the cathode of D_2. For D_1, the path is from the plate of D_1 through C_4 to ground, and then through ground to C_5, L, and L_2, and back to the cathode of D_1. From this analysis it is easily seen how a voltage 180° out of phase with E_1 is applied to both diodes as well as voltages E_2 for diode D_1 and E_3 for diode D_2. To indicate how the audio voltage output appears, the current paths of each diode are illustrated; the audio voltage appears across C_5 in a similar manner to that of Fig. 7-37. The electrolytic capacitor C_4, even though it is in the path of the current flow of diode D_1, offers negligible impedance, so negligible voltage drop appears across it.

THE OSCILLATOR DETECTOR

We now come to the third type of f-m detector system — one based on the principle of the locked-in-oscillator. Two methods have been developed for adapting this locked-in-oscillator for detection of f-m signals. One of them is applied in the Beers receiver, developed by G. L. Beers of the Radio Corporation of America, in which a locked-in oscillator performs limiting action and a discriminator circuit the actual detection. This circuit essentially employs two tubes, one for the locked-in oscillator and the other a duo-diode for the discriminator. As compared with conventional discriminators, the discriminator operates over a reduced range of frequency deviation, and therefore is called a reduced-range discriminator. Since this circuit is not available commercially, it will not be discussed here.

The other method uses a *single tube* that operates on the locked-in oscillator principle and accomplishes the detection of the f-m signal. This latter method has been applied commercially, and the locked-in oscillator principle will be analyzed in conjunction with this single-stage detector. Both of these locked-in oscillator detector systems respond only to frequency changes in the incoming signal and not to amplitude changes.

The Single-Stage Locked-in Oscillator Detector

Philco receiver Model 46-1213 incorporates the locked-in oscillator and f-m detection in a single tube which is a special pentagrid construction. A simplified schematic diagram of this single stage f-m detector appears in Fig. 7-39. This network comprises three different tuned circuits including components L_1C_1, L_2C_2, and L_3C_3. It is note-

worthy that all three circuits are resonant to the same frequency, namely the i.f.

The cathode and first two grids of the unit form a Colpitts oscillator, from which the signal of oscillator frequency is electron coupled to the plate of the tube. The oscillatory tank circuit consists of L_2 and C_2 in conjunction with the 33 $\mu\mu f$ and 68 $\mu\mu f$ capacitors. Resistor R_1 in parallel with C_4 forms the grid leak bias arrangement of the oscillator

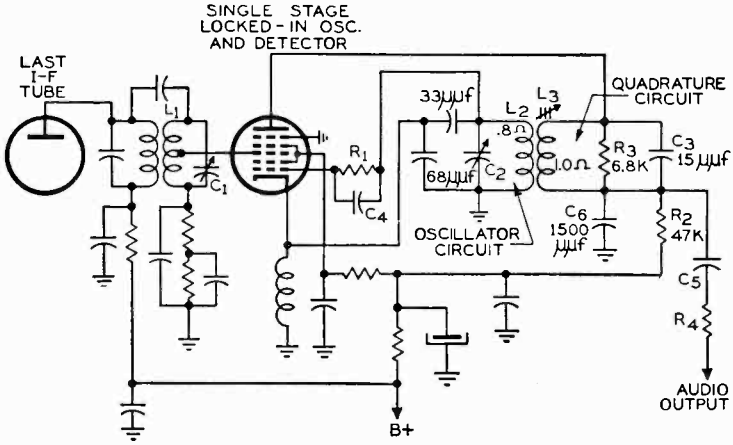

Fig. 7-39. The locked-in oscillator detector circuit of the Philco model 46-1213 receiver. The detector circuit of Philco model 48-482 is essentially the same.

section. Grid number 2 serves the purpose of the oscillator anode. As grid 4 is connected to grid 2, both receive the same supply voltage and are at i-f ground potential through a bypass capacitor.

Capacitor C_3 and inductor L_3 in parallel compose the tuned plate circuit. As mentioned, this circuit is also resonant to the i.f., but the parallel 6800-ohm resistor R_3 lowers the Q of the circuit and thus increases the bandwidth. The lower the parallel resistance, the lower will be the Q, but the resistance cannot be too low or it may completely damp out the oscillations of the tank. However, the 6800 ohms are low enough to cause the bandwidth of the plate tank circuit to increase to about five times that of the f-m signal. The bandwidth of this circuit is increased by a great amount, so that the impedance of this circuit will not change over the frequency range of the incoming signal. This plate tank circuit, by the nature of its action, which will be described later, is called a quadrature circuit.

The oscillator is so designed that its grid is driven positive over a small portion of its positive half cycle of signal, and by its class C operation the r-f current flow in the tube, due to the oscillator, is in pulses of short time duration. With no input signal applied these pulses

will also flow unchanged in the plate tank circuit. The amount of this current flow to the plate is controlled by the polarity of voltage applied to grid number 3. If grid number 3 is made negative with respect to its potential before a signal is applied, less current will flow. Conversely, if the grid is made positive more current will flow. Thus grid number 3 is a controlling factor in the magnitude of the current flow in the tube.

The vector diagram of Fig. 7-40 (A) will make this clearer. Vector e_1 is the oscillator voltage that exists on grid number 1, and quadrature vector e_{3a} is the signal voltage that exists on grid number 3 when the incoming frequency is equal to the center i.f. Vector e_{3a} is drawn in quadrature because it is known that, when there is no signal input or when the signal is exactly in tune (that is, equal to the center i.f.), the pulses of current flowing in the tube do not change. Vector e_{3a} thus should have no in-phase or 180° out-of-phase components, and it is therefore drawn in quadrature with vector e_1. Under this circumstance the input signal passes through a zero value when the pulses of plate current are at a maximum, because the free frequency of the oscillator (that is, with no input to grid 3) is the same as the center i.f.

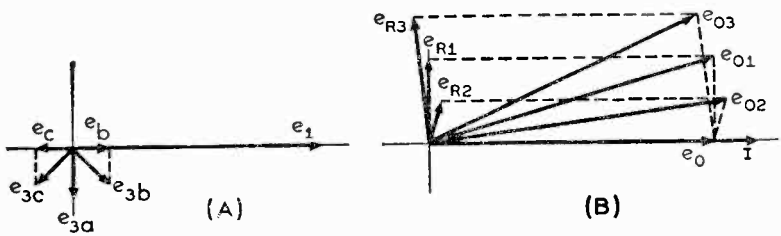

Fig. 7-40. Vector diagrams of the voltage and current relationships in the oscillator detector circuit of Fig. 7-39.

If there is a phase change between the incoming signal and pulses of voltage, one component of the signal voltage will be either in phase or 180° out of phase with the pulse voltage. Consequently the amplitude of the pulse voltage will increase or decrease, which in turn will cause the pulse current to increase or decrease. When the magnitude of the input voltage vector remains constant while its frequency changes, the phase relationship between the signal voltage and oscillator pulse voltage also changes. This is shown in the vector diagram of Fig. 7-40 (A), where vector e_{3b} indicates the signal voltage when its frequency has decreased from the center i.f. and vector e_{3c} indicates the signal voltage when its frequency has increased from the center i.f. In the former case the phase relationship is seen to be decreasing, and in the latter is seen to be increasing. If these two off frequency signal vectors are resolved into their horizontal components, the latter will be either in phase or 180° out of phase with e_1. From the

vector diagram the horizontal voltage component e_b of vector e_{3b} is in phase with the oscillator pulse voltage vector e_1, thereby effectively increasing the magnitude of the pulse voltage and hence the current. But horizontal component e_c of vector e_{3c} is 180° out of phase with e_1, thereby decreasing its magnitude and likewise decreasing its current pulse. Consequently, it is seen that when the frequency of the incoming signal to the number 3 grid is increased above the center i.f., the magnitude of the current pulses decreases and when the incoming signal is decreased in frequency the magnitude of the current pulses is increased.

The quadrature and oscillator circuit are so coupled together that a certain amount of voltage is fed back to the oscillator circuit. The feedback voltage is proportional in amplitude to the pulses of current and is approximately in quadrature with the voltage that would exist across the oscillator if there were no feedback. This change in quadrature feedback voltage effectively changes the *frequency* of the oscillator circuit. The frequency change is such that the oscillator will lock-in at a frequency equal to that of the incoming signal. As the input frequency changes, the oscillator will follow because of the lock-in effect. Let us examine the vector diagram of Fig. 7-40 (B) which clarifies this preceding analysis.

Vector e_o is the voltage that would exist across the oscillator tank in the absence of feedback. Since this tank circuit is a resonant circuit, the current flowing through the circuit will be in phase with this voltage e_o, as indicated by the current vector I. In the presence of feedback the total effective voltage across the oscillator tank is equal to the reflected voltage plus the voltage e_0 existing without feedback. This reflected voltage is approximately in quadrature leading the oscillator voltage e_o, and thus has the effect of introducing an effective inductance in series with the oscillator tank inductance. This increase in inductance establishes the operating frequency of the oscillator at the center i.f. When the incoming signal is exactly equal to the center i.f., a certain amount of voltage is reflected into the oscillator circuit from the quadrature circuit of Fig. 7-39. This voltage is designated as e_{R1} in the vector diagram of Fig. 7-40 (B). When vectorially added with e_o, it produces the resultant oscillator voltage vector e_{01}.

From the vector diagram of Fig. 7-40 (A) we see that if the incoming signal increases in frequency, the pulses of plate current will be decreased, and since these current pulses flow through the quadrature circuit, the reflected voltage to the oscillator circuit will also decrease. This voltage is shown as vector e_{R2} which has a smaller amplitude than e_{R1} and thus has a decreased inductive effect. Under this condition of reduced inductance the frequency is increased. Due to this increase in frequency the phase lead of e_{R2} is slightly less than e_{R1}. When this voltage vector e_{R1} is vectorially added with e_o, a new

resultant oscillator voltage e_{02} appears across the oscillator tank. Consequently, we have a locked-in effect when the input signal increases in frequency.

When the input signal decreases in frequency, the pulses of plate current will increase as shown previously. This increase in current will cause an increased reflected voltage into the oscillator tank circuit. This voltage is designated as vector e_{R3} in Fig. 7-40 (B). Due to its increased amplitude it produces an increased inductive effect in series with the oscillator inductance, thereby decreasing the frequency of the oscillator. When e_{R3} is vectorially combined with vector e_0, the resultant oscillator voltage vector is e_{03}. Therefore, a lock-in effect also occurs when the input signal decreases in frequency. In either instance the circuit is so arranged that the plate current will change linearly with respect to frequency variations. Although the reflected voltage varies in amplitude, its phase relation with respect to the resultant oscillator voltage also varies in a manner to maintain the resultant oscillator voltage substantially constant. If the oscillator voltage were not constant, its variation would produce distortion of the output audio signal.

The rate of the plate current change is dependent upon the rate of deviation, which in turn is dependent upon the audio modulating frequency. The magnitude of plate current change is dependent upon the amount of frequency deviation, which in turn is dependent upon the magnitude of the audio. Therefore, the plate current varies in direct accordance with the audio modulating frequency. Since this current flows through the plate circuit of the tube, it is possible to obtain these audio variations across part of the plate load. In Fig. 7-39 resistor R_2 serves as the load across which these audio variations are taken off. The 1500 $\mu\mu f$ capacitor C_6 serves as a bypass for any i-f currents. Capacitor C_5 and resistor R_4 are used to couple the audio output to the succeeding audio stages.

The detector response curve is such that, with a minimum input signal maintained at all times, there will be a linear characteristic over a bandwidth of about 100 kc on either side of the center i.f. If the voltage input is too small, the lock-in effect which is necessary for the proper operation of the detector will not prevail.

Amplitude-modulation effects are suppressed in the following manner: A change in the signal amplitude tends to change the pulse amplitude. Any change in pulse amplitude will cause a change in the reflected voltage from the quadrature circuit into the oscillator circuit and thus cause a change in oscillator frequency. This is further illustrated in Fig. 7-40 (B) which also reveals that changes in oscillator frequency are accompanied by phase changes between the pulse and reflected voltage. Consequently, there is a phase change between the pulse and the input signal. But the oscillator undergoes only a negli-

gible frequency change until it once again locks-in frequency with that of the incoming signal.

Thus, the change in signal amplitude produces a negligible change in pulse current which, in turn, does not produce more than a negligible change in oscillator frequency because of the lock-in effect. From this we see that the oscillator detector is highly insensitive to a.m., since changes in signal amplitude have such little effect on the pulse current. Thus like other practical f-m detector systems the slight sensitivity to a.m. is far less than the sensitivity to f.m.

COMPARISON BETWEEN DETECTOR SYSTEMS

Of the three detector systems discussed, it would be difficult to say that one is 100 percent better than another. Each system has advantages and disadvantages, and, according to the performance desired by certain designers, a detector system may be considered good in one respect and bad in another. By a consideration of a number of these advantageous and disadvantageous characteristics a comparison of the individual detector system will be made.

It was shown that the ratio detector system has the advantage of operating more satisfactorily on weak input signals than the other two. A certain threshold of input signal is required for the proper operation of the limiter-discriminator circuits and the oscillator detector, but not for the ratio detector. So the ratio detector is able to suppress a-m effects of the incoming f-m signal at a lower signal level than the other two detector systems.

One of the main drawbacks of the ratio detector system is that it is very critical in its balance, and, consequently, in the linearity of its output characteristic. For this detector system to suppress a.m. properly, a careful balance between the two diode circuits must be maintained. One of the main factors in the balancing of this circuit is the proper design of the input transformer. To produce good balancing, a high Q bifilar wound secondary is used in many circuits with good results.

If the selectivity ahead of a detector is not wide enough, then on high-frequency swings of the f-m signal a strong *downward a-m* effect is caused, which results in distortion at the output of the detector. When the f-m signal has a.m. introduced into it, the combined signal has the shape of an a-m signal, with the r-f part of it varying in frequency. The peaks of the a.m. are referred to as *upward a.m.* and the valleys or troughs as *downward a.m.* If the selectivity ahead of the detector is sharp compared with the swing of the f-m signal, some of the f-m sidebands will be cut off and the output f-m signal will have amplitude changes, with the downward modulation being great enough to cause distortion in the output. This effect is particularly evident in the ratio detector circuit. This disadvantage can be

overcome if the f-m receiver is designed carefully, so that the i-f selectivity can not vary enough to cause this downward a-m effect.

As previously mentioned concerning the limiter-discriminator and locked-in oscillator detector circuits, their main disadvantage arises from the fact that a high threshold input signal level is required for proper amplitude limitation. This requirement means that adequate r-f and i-f gain must be provided before the input to the detector circuit. Consequently, an r-f stage usually has to be incorporated, as well as at least two i-f stages. The single-stage oscillator detector circuit has an advantage over the limiter detector circuit in that detection and amplitude limitation are accomplished within a 1-tube circuit.

If a really good over-all performance of the limiter-discriminator detector is desired, it is best to use a cascade limiter arrangement instead of a single limiter stage. By this cascaded circuit the maximum possible range of linearity is obtainable, and yet the output level from the detector is kept fairly constant. By choice of the proper time constants of the limiter circuits, impulse noise will have the greatest amount of limiting in this detector circuit. The discriminator transformer also should have a careful design, so that the proper amount of coupling exists between the primary and secondary. The circuit should be well balanced, and adequate means be provided to correct any slight variation in the balancing. In practice, it has been found that the limiter-discriminator detector is the least critical so far as balance of the detector system and linearity of the output are concerned.

Many of the pros and cons of the limiter-discriminator detector also can be ascribed to the locked-in oscillator detector. The latter system has the additional advantage that, by the intrinsic nature of its circuit, it is the one least affected by interference. However, this system primarily depends upon the lock-in nature of the oscillator, and, if for any reason this cannot be adequately maintained, the system will not operate satisfactorily. Therefore the oscillator circuit must be well shielded from any effects other than those necessary for the shifting of the oscillator frequency to produce the lock-in effect. To insure this, the filament supply of the locked-in oscillator circuit, as well as that of the other electrodes, should be properly bypassed, so that no outside f-m or p-m effects are introduced into the oscillator circuit by hum or other voltage fluctuations.

THE AUDIO SYSTEM

The audio stages of f-m receivers are very similar to those of a-m receivers; the main differences between the two audio systems are in their response characteristics. The audio stages in both follow the detector stage, and the intelligence reproduced for injection into the audio systems is the same as that at the transmitting studio. Because

of the FCC regulation on modulating frequencies, the normal maximum audio frequency that can be passed by most a-m stations is only 7.5 kc, but with f.m., as was shown at the beginning of the book, a maximum frequency of 15 kc can be passed.

This difference in possible frequency response is what causes the audio systems of a-m and f-m receivers to differ in basic design. In many a-m receivers, the sets are designed with a response to about 3000 or 3500 cycles per second, although transmitters use higher audio frequencies; however, any system that does not allow full reproduction of all the audio modulating frequencies is not considered high fidelity. In a-m systems, the audio frequency limitation starts at the transmitter where usually a maximum of only 7.5-kc audio can be passed. Consequently, it is generally unnecessary for a-m receivers to have an audio response better than 7.5 kc, although the higher priced receivers may have such a range.

In f.m. the situation is different. By the nature of this type of modulation, the high frequencies involved, and the channel separation, f-m transmitters can and are required by the FCC to have an audio-frequency response to 15 kc. This means that in any f-m program that is transmitted, especially nonrecorded musical programs, the high-frequency audio notes will be contained in the audio f.m. of the carrier signal. Therefore it is reasonable for the receiver used for f-m reception to have an audio-frequency response greater than 7.5 kc and as high as 15 kc. The sales price of a receiver is a factor in determining the presence of the components which enables realization of the full 15-kc range of frequencies since such components increase the cost of the set.

As far as f.m. is concerned, high fidelity means that the system is capable of reproducing, with a minimum of distortion, the maximum range of audio frequencies that is considered necessary for good listening. For an f-m receiver to have true high fidelity, the audio system should have a frequency response to 15,000 cycles. Such a system is very expensive compared with that needed in a-m receivers, because it entails the use of high-fidelity output transformers, speakers, and audio coupling networks.

Most audio systems incorporate one or two audio voltage amplifiers and an audio power output stage. These are the stages which should have a frequency response to 15,000 cycles for maximum high fidelity. Since most f-m receivers are combined with a-m receivers, the same audio network is used for both. In many instances the audio system is designed for the usual a-m reception, and the f-m section must use this same audio system with a consequent loss in fidelity. A high-fidelity audio system designed for use in an a-m, f-m receiver would add greatly to the cost of the set, perhaps putting the price above that which the average consumer is willing, or able, to pay.

To attain proper high fidelity, the coupling between the audio stages, whether RC, impedance, transformer, or any combination of these, should have a frequency response that is flat up to 15,000 kc. Besides the coupling arrangements, the use of the tubes and other associated circuit components should be of the proper design, so that a minimum amount of distortion will be introduced. There are various means of doing this which are also employed in a-m receivers. One of them is to use a push-pull power output circuit; however, these circuits are not necessarily the criterion, as single-tube output circuits are in use which give as good a response.

Following the power output tube is the output transformer, an essential component in matching the impedance of the last stage to the speaker for a maximum transfer of energy. As mentioned, it is necessary to have the frequency response of this unit just as flat to 15,000 cycles as the preceding audio stages. A poor output transformer is one of the main causes for distortion in the output of a receiver.

The last unit in the audio system is the loudspeaker, which, if it is to be a high-fidelity component, is quite an expensive item compared with the rest of the f-m set. True high-fidelity, distortionless loudspeakers may cost as much as $200. Other types of good loudspeakers are not so expensive, but in general they cost much more than the conventional loudspeaker used in an a-m receiver. High-fidelity loudspeakers generally are larger in size than the loudspeakers used in most conventional a-m receivers; the baffle used with these loudspeakers, therefore, must be larger. The cabinet size is thus increased and this, too, adds to the price of an f-m receiver.

The use of the necessary high-fidelity loudspeaker thus makes difficult the problem of producing an f-m receiver within the economic limitation of most consumers. If a 100-percent high-fidelity f-m reception system is desired, all the audio stages plus the loudspeaker have to be high fidelity and free from most distortion. Such a system, undoubtedly, would be priced too high for the average buyer. An alternative is to reduce the fidelity a little by using a good but not a true high-fidelity loudspeaker so that the cost is reduced. It is quite difficult, however, to reduce the over-all cost by very much, because most good loudspeakers are relatively expensive, even when they cost $50 as compared with the previously mentioned $200. The general public will not pay the considerable price necessary even for a set that employs a $50 loudspeaker.

Thus we see that the f-m receiver manufacturer is in a dilemma. He can produce a 100-percent high-fidelity f-m receiver, but he knows that the loudspeaker, plus some of the other components, make the sales price too high for the average consumer. This has been proved by the fact that the public has bypassed the high-fidelity f-m receivers that are on the market in favor of the lower priced f-m, a-m

combinations. Yet the manufacturer still wants to put f.m. on the market at a medium price. The easiest way to do this is to use a loudspeaker that is within the price range of those used for a.m. This, of course, definitely eliminates the use of a perfect over-all high-fidelity system. Nevertheless, this is sometimes done, and as a consequence of the loudspeaker employed, many receivers do not have too good an audio response characteristic.

Even within the price range of the general public, the audio response of an f-m receiver can be improved beyond the usual range of a-m receivers, although what is attained is not completely high fidelity. Even though loudspeaker costs increase according to the increase in audio-frequency response and distortion-free reproducing ability, a compromise can be reached. The frequency response may be designed to be somewhere from 6 to 8 kc, and a loudspeaker that can handle these frequencies employed. In fact, the cost may be reduced somewhat more by not paying too strict attention to the distortion characteristics of the loudspeaker. This is done in some f-m receivers. Although these receivers may not be 100-percent high fidelity up to 15,000 cycles, at least they are consistent throughout their audio system, including the loudspeaker, concerning the frequency response which is much better than the low audio response of a-m systems. They are, nevertheless, in the price range of the average consumer.

It is hoped, and believed, that some day soon receiver and speaker designers and manufacturers will be able to produce high-fidelity loudspeakers and f-m receivers in sufficient quantity, so that the radio buying public will be able to buy really high-fidelity f-m sets within the price range of all. The beauty and clearness of true distortionless high-fidelity reproduction cannot be appreciated unless one has had the personal experience of listening to such audio reproduction.

F-M TUNERS

Appearing on the market in recent years have been quite a few f-m receivers that do not contain any, or contain only a part of, the audio system. These units in reality, are not true receivers, since they cannot reproduce within themselves the necessary audio sound. Such units are called *tuners* or *converters*. Neither term has been given preference, but the former has been used widely during the past year or so.

The main reason such units are in demand is that they can be used with any audio system, whether part of a phonograph amplifier, the audio system of an a-m receiver, or a specially built high-fidelity audio amplifying system. To make these f-m tuners available to the public, so that they can also receive f-m stations through their a-m receiver (although the reception will not be high fidelity), the trend is toward producing tuners priced well within reach of everyone. In

most of these tuners all the necessary design features of regular f-m receivers are incorporated, so that nothing is lost as far as the operation of the tuner is concerned. In fact, many of these f-m tuners contain designs that are unique and deserve careful consideration.

In this section on tuners we will analyze two new units that have just appeared on the market at the time of this writing. The units are priced about the same, and are about the same size, but their over-all designs are different. We will not discuss each unit completely but only those features that are considered unique in design and also that warrant special mention. Neither unit includes any audio stage at all. One unit uses the limiter-discriminator method of detection, and the other unit uses the ratio detector. The two methods of tuning, as well as the types of i-f transformers employed, are quite different.

The Edwards Fidelotuner

This f-m tuner[4] employs the limiter-discriminator method of detection. The complete schematic for this tuner is illustrated in Fig. 7-41 (A), and a drawing of the top chassis layout is shown in Fig. 7-41 (B). Five tubes are employed in the unit, with three 6SH7 sharp-cutoff pentodes used as the first and second i-f amplifiers and also as the limiter. The discriminator uses the duo-diode 6H6 tube, and the 6J6 miniature duo-triode is used as the converter. Note that no separate r-f stage is employed, even though the tuner uses the limiter-discriminator detector network. The reason for this is that the signal-to-noise ratio of the set is high, and the signal input to the limiter is sufficiently great to give satisfactory performance.

A few interesting features about this tuner warrant special mention, and the most interesting is the method of tuning. The tuning in this unit is inductive, but does not involve any permeability tuning. Open-wire parallel transmission lines are used for varying the inductance of the r-f input and oscillator section of the converter tube. Consequently, this type of tuning is called *transmission line* tuning. The variation in inductance is obtained by running a shorting bar along the parallel line, thus changing the inductance offered by the changing length of each line. A schematic representation of this tuning system is shown in the upper left part of the diagram of Fig. 7-41 (A), and its physical layout on the chassis is seen in Fig. 7-41 (B). To show exactly how this tuning unit works, a pictorial view of it, showing both the oscillator and r-f tuning lines is illustrated in Fig. 7-42 (A), and a schematic representation of how the tuning lines form the tank circuit is illustrated in Fig. 7-42 (B).

Since the frequencies involved are quite high, the inductive and

[4]Manufactured by FM Specialties Inc., of New York, N. Y., under the brand name of "Edwards Fidelotuner."

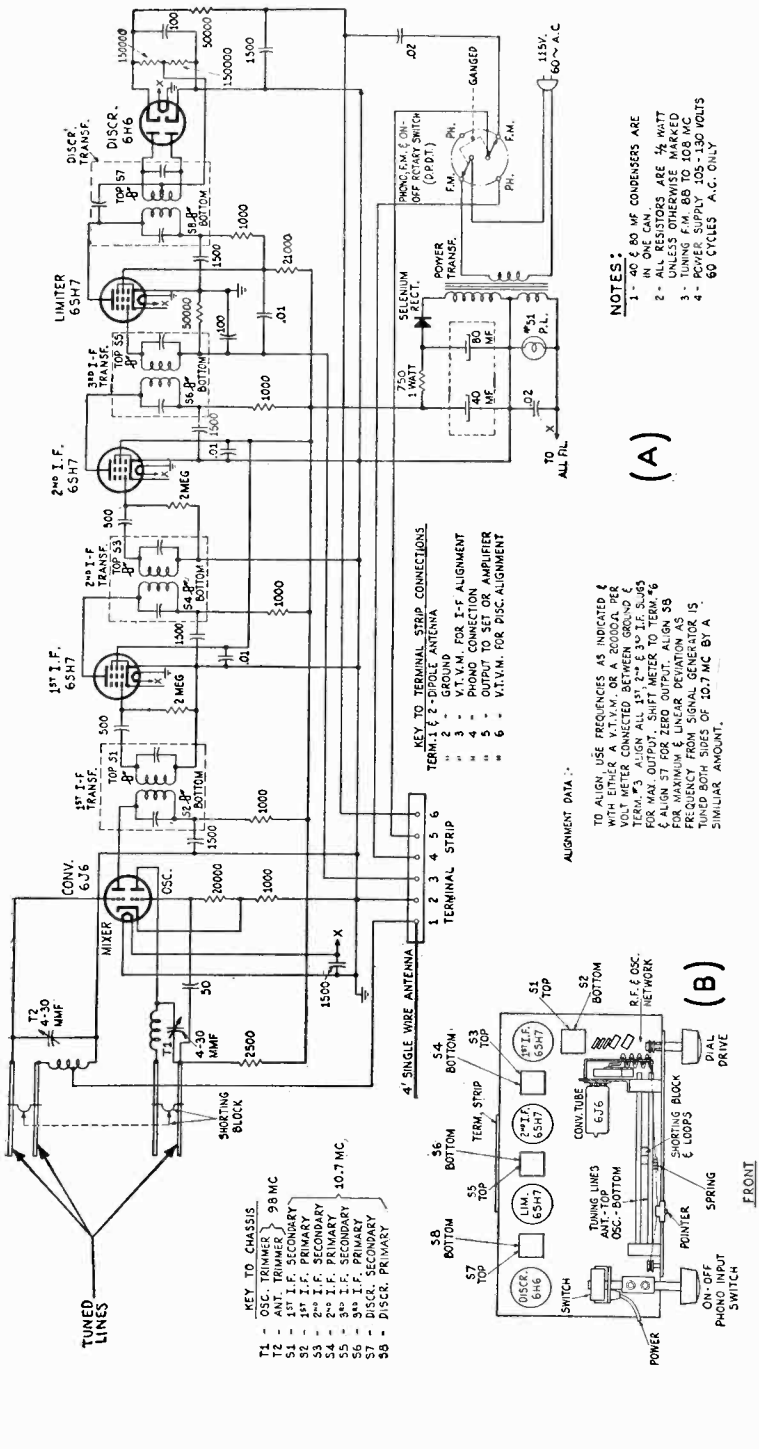

Fig. 7-41. Schematic of the Fidelotuner, which employs the limiter-discriminator method of detection. The chassis layout of the set is shown in (B).

capacitive values that form the r-f or oscillator tank circuits are very small. Thus, it is possible to use the difference in inductance in the varying length of transmission line as a means of high-frequency tuning. The actual formation of the oscillator and r-f tank circuits uses a fixed inductance and capacitance, which are connected together at one end, in conjunction with a transmission line in each case. From the other ends of these components, the two transmission line leads

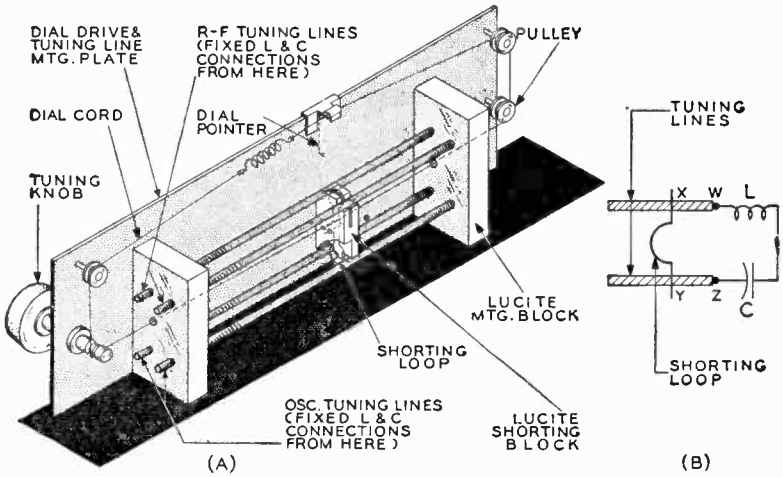

Fig. 7-42. Pictorial layout of the tuning unit of the Fidelotuner (A) and a schematic representation is shown in (B). The shorting block carries two shorting loops, one for each pair of lines.

are connected. This is indicated in Figs. 7-41 (A) and 7-42 (B). A metal shorting loop is rigidly placed across each set of lines, and the position of this loop on the lines determines how much extra inductance is added to the tank circuit because the shorting loop completes the tank circuit.

The schematic of Fig. 7-42 (B) will make this somewhat clearer. The inductor L and capacitor C represent the fixed quantities in the circuit and are connected together as shown. Let us assume that the shorting loop is at the position indicated. To complete the tank circuit, the current must travel through one part of the line, then through the shorting loop, and finally through the other part of the line back to the circuit. It can travel from L, then to points W, X, Y, and Z and then to capacitor C; or it can go from C in the direction of Z, Y, X, W, and then to inductor L to complete the circuit. It is the added inductance of the parts of the line from W to X and from Y to Z, *plus* that of the shorting loop in conjunction with the distributed capacitance of the line parts, which determines the final resonant frequency of the

tank circuit. The lengths *W to X* and *Z to Y* are equal due to the mechanical nature of the system. The shorting loops are very thin phosphor bronze springs rigidly mounted in a lucite block, which in turn is connected to the dial cord and pulley arrangement for the proper tuning of the set. This is seen from Fig. 7-42 (A). Both the oscillator and r-f shorting loop are placed in the same shorting block, so that they are effectively ganged together and are variable as one upon tuning of the unit. The r-f and oscillator lines are spaced far enough apart, so that no serious interaction between these circuits is possible. The lines are all made of hardened brass tubing 5½ inches long and ⅛ inch in diameter, and they are covered with a thin layer of silver plate. The shorting loop makes a hair line contact with the lines, and this contact is maintained in a rigid state due to the high spring tension of the phosphor bronze and the shape of the loop. The lines themselves are fixed in position on two lucite mounting blocks fastened to a mounting plate.

Although there have been other types of inductive tuning circuits, we believe the type illustrated here to be of a unique yet very simple design, with which proper tuning can be obtained with the least amount of trouble.

There are two other interesting features to this tuner. One is that a duo-triode 6J6 miniature tube is used as a converter, in which one triode section serves as the mixer and the other as the oscillator. Although it has not been mentioned previously, two triodes used for a system of frequency conversion have one of the highest, if not the highest, signal-to-noise ratios among converter systems. This high signal-to-noise ratio obviates the need for an r-f stage to increase the signal input.

The other interesting thing is that the oscillator plate current flows through the transmission line and shorting loop as seen in Fig. 7-41 (A). This current flow is a good reason why the loop contact to the lines must be tight.

The i-f and discriminator transformers are of the special kind that use magnetic shielding in conjunction with permeability tuning, as discussed in the section dealing with the i-f system and Fig. 7-12.

The terminal strip shown in Fig. 7-41 (A) is on the back of the chassis, and it affords a quick means of alignment as well as a fast and easy method of connecting the tuner to an a-m radio or amplifier. The meter method of aligning the i.f.'s and discriminator is also indicated in Fig. 7-41. At the end of chapter 8, the factory alignment procedure for this tuner will be found, using a combined meter and visual method.

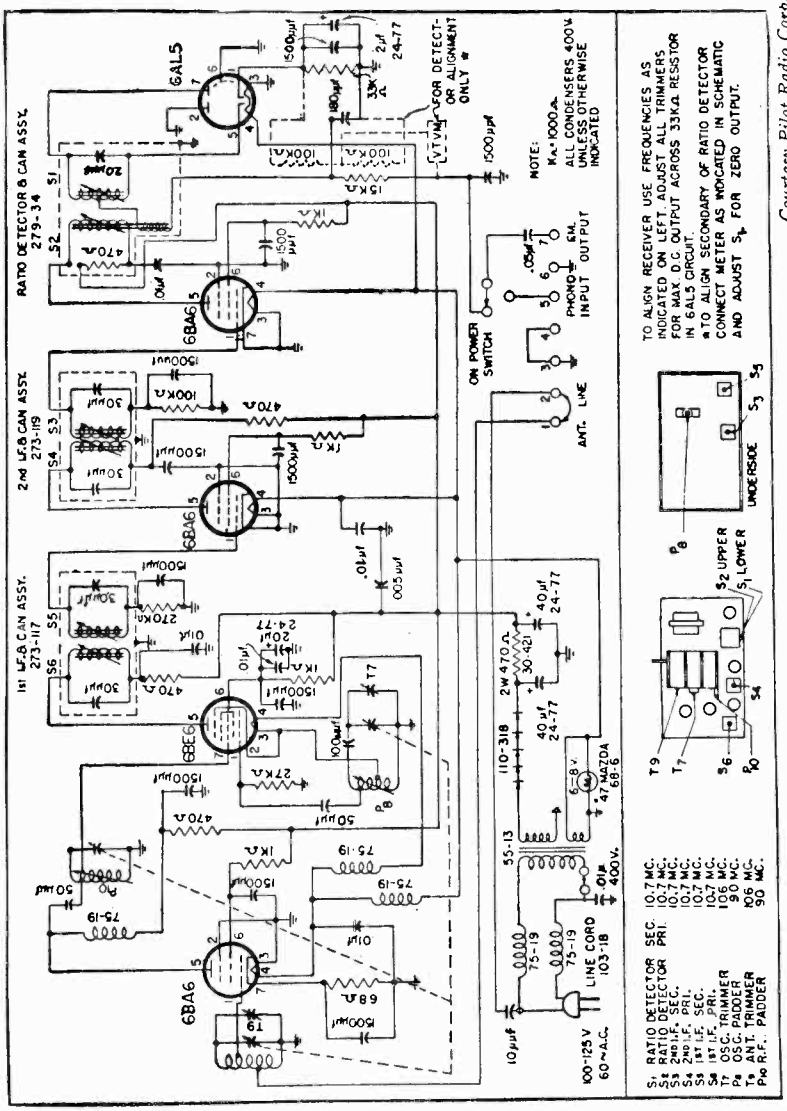

Courtesy Pilot Radio Corp.

Fig. 7-43. Schematic diagram of the Pilotuner with the alignment frequencies and layout showing locations of the trimmers and variable core adjustments.

The Pilotuner

This f-m tuner[5] also employs five tubes but uses all miniature sizes with a 6AL5 duo-diode employed as a ratio detector. Three other tubes are 6BA6 pentodes used as an r-f amplifier and for the first and second i-f amplifiers. A 6BE6 pentagrid tube is used as a converter. The schematic diagram for this tuner appears in Fig. 7-43, and a top chassis view appears in Fig. 7-44.

From the schematic diagram, a few interesting things are noted. First of all, the coils marked as P_8 and P_{10} are shown to be variable without any internal core adjustment similar to the i-f transformers.

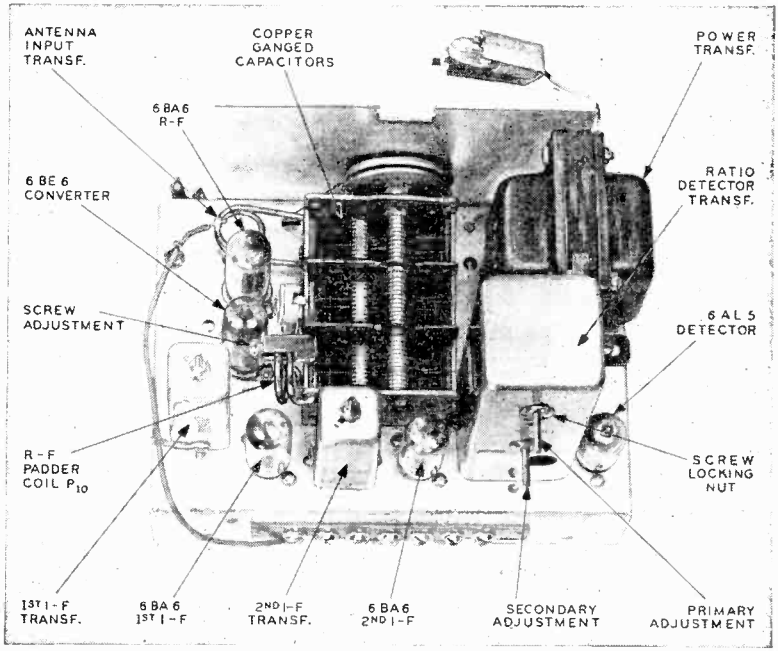

Fig. 7-44. Top view of the Pilotuner chassis showing locations of the tubes, transformers, and other components.

Looking at the ratio detector transformer, we note that the primary does not contain any fixed capacitance for tuning purposes. The core going through the primary coil is also extended to the coil directly underneath this primary, indicating that both coils are wound on the same coil form. These features plus some other interesting properties of the tuner will now be discussed in detail.

[5]Manufactured by the Pilot Radio Corp. of N.Y.C. under the brand name of "Pilotuner" and listed as model T-601.

In aligning the oscillator and r-f stages on the low end of the f-m band, the tuner provides for inductive padding. The r-f section's inductive padder is designated P_{10} in Fig. 7-43 and also appears in the picture of Fig. 7-44. The interesting thing about this coil is that the variation of its inductance is simply made by changing the spacing between the coil windings. From Fig. 7-44 the r-f padder coil P_{10} is seen to consist of only two turns, and the space between these two windings is varied by means of a screw. The screw is kept in place by means of a piece of Bakelite tubing which is threaded on the inside. Upon clockwise rotation of the screw, the coil spacing is decreased, thereby increasing the inductance, and upon counterclockwise rotation the spacing is increased, thereby decreasing the inductance.

The oscillator padder P_8 is located on the underside of the chassis and also consists of about two turns of wire. A drawing of this oscillator padder construction is shown in Fig. 7-45. The variation of the

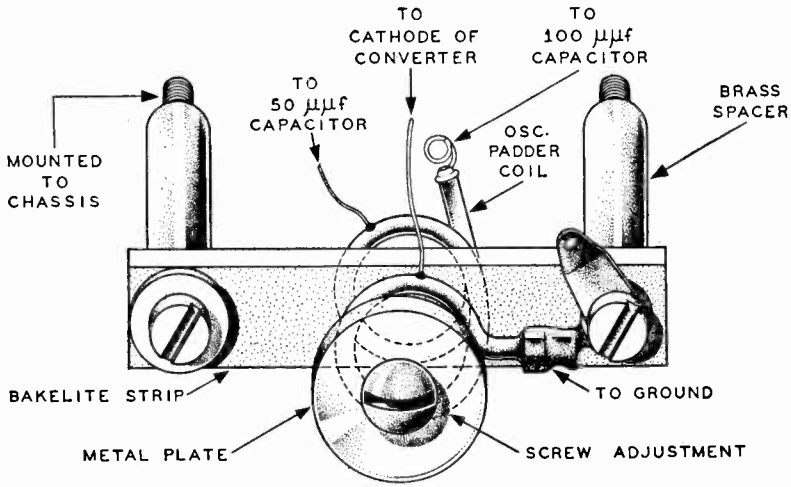

Fig. 7-45. The construction of the oscillator padder used in the Pilotuner. The threaded portion of the screw adjustment was omitted from the drawing for reasons of clarity.

inductance of this padder is somewhat different from that for the r-f padder P_{10}. The spacing between the coil turns of this padder P_8 are kept stationary, but the effective magnetic field about the coil is varied. Between the spacing of the winding is a thin strip of Bakelite, which is mounted above the chassis by two brass spacers. This Bakelite strip runs through the spacing of the coil and contains a threaded hole where the center of the coil winding appears. Into this hole is inserted a screw which has a round metal plate attached to the underside of the screw head. This metal plate is about 7/8 of an inch in diameter

and 1/16 of an inch thick. Its diameter exceeds the diameter formed by the coil winding.

Inductance of this oscillator padder coil is varied by turning the screw in or out. This inductance variation is explained as follows: The metal plate acts as a short-circuited secondary winding to the oscillator padder coil, which effectively acts as the primary winding. The short-circuited secondary reflects a reactance into the primary which is capacitive. This reflected capacitance is effectively in series with the primary inductance, and therefore reduces the effective value of the inductance. With the movement of the screw and, hence the metal plate, the coupling between the plate and coil changes. As a result the mutual reactance which exists between the plate and coils also varies, which in turn varies the reflected capacitance into the coil circuit. Turning the screw so that the plate moves toward the coil increases the coupling and also *increases* the reflected capacitance into the primary. This increased reflected capacitance decreases the effective inductance of the oscillator tank circuit, thereby increasing its frequency. Adjusting the screw so that the plate moves away from the coil increases the effective inductance and, hence, decreases the frequency of operation of the circuit.

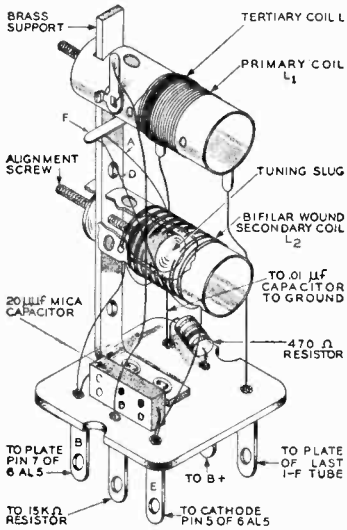

(A) RATIO DETECTOR TRANSFORMER

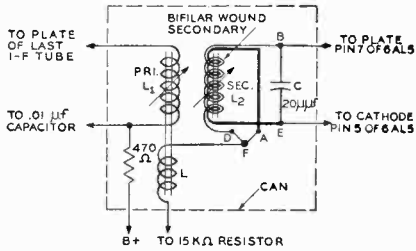

(B) SCHEMATIC OF RATIO DETECTOR TRANSFORMER

Fig. 7-46. How the ratio detector transformer of the Pilotuner is constructed (A) and its schematic diagram is shown at (B). Note the bifilar wound secondary.

The primary of the ratio detector transformer has no fixed capacitance across its coil, but it still forms a tuned circuit with the output capacitance of the last i-f tube, stray wiring capacitance, and the inherent capacitance between the coil windings. The amount of this

capacitance is high enough at the 10.7-mc i.f. to form a tuned circuit with the primary coil. Besides this feature, the physical construction of the ratio detector transformer is quite interesting. A picture of the construction of the transformer is shown in Fig. 7-46 (A), and a detailed schematic drawing is shown in Fig. 7-46 (B). This schematic drawing is somewhat different in appearance from the ratio detector circuit which is shown in Fig. 7-43, but they are effectively the same in circuit operation.

The tertiary coupling coil L is wound over one end of the primary coil L_1 which appears on the top coil form of Fig. 7-46 (A). Because of this close coupling between L and L_1, the voltage appearing across L_1 is effectively in series with L but 180° out of phase. The secondary is wound on the lower coil form. Both coil forms are mounted on a flat brass strip, and each coil form contains a variable core to change the effective inductance of the coils. The cores are adjustable by means of two screws which appear on one side of the brass strip as seen in Fig. 7-46 (A). These screws are about 1⅝ of an inch apart.

Particularly noteworthy in the construction of this transformer is the bifilar winding of the secondary coil. This bifilar winding is obtained by using a very closely spaced twin lead, which is insulated with a transparent plastic and is wound around the bottom coil form with both ends open. The plastic insulator at the ends is split, exposing two bare wires at each end. These two wires of the twin lead are shown in the drawing of Fig. 7-46 (B) as coil A to E and coil B to D. A trace of the coil circuit across capacitor C starting at point B, would travel from point B to D, then from F to A to E. Therefore, each part of the bifilar winding L_2 contributes to the inductance for the secondary tuned circuit.

Coil L must be tapped to the center of the secondary inductance to maintain the balance for the detector circuit. This tap is obtained by connecting one end of L to point F, the junction of A and D, as seen in Fig. 7-46 (B). The complete inductance of the secondary is made up of the coil winding $BDFAE$, and since the length of BD is approximately equal to length AE, it is readily seen that by connecting to point F, the junction of AD we are effectively center-tapping the coil. It is advisable that, if any trouble is suspected in the ratio detector circuit that lies within the transformer shield, the serviceman not attempt to take the circuit apart. It is suggested that the manufacturer or one of his representatives be contacted.

QUESTIONS

CHAPTER 7

7- 1. What is one of the most important functions of an input transformer in an f-m receiver?

7- 2. What are two of the most common methods of making the r-f tuned circuits in f-m receiver broad-band?

7- 3. What are some of the advantages in using an r-f stage in an f-m receiver?

7- 4. Why is the signal-to-noise ratio low at the output of the converter (or mixer) stage when no r-f tube is employed?

7- 5. *a.* Is image frequency interference possible within the f-m band of today when the i.f. is 10.7 mc? Why?

b. Is image frequency interference possible within the f-m band of today when the i.f. is 4.5 mc? Why?

7- 6. What are some of the factors that determine the choice of a good r-f tube for an f-m receiver?

7- 7. What effect will appreciable lead inductance in the cathode circuit of the r-f tube have on the match between receiver and antenna?

7- 8. Why is it preferable to use separate mixer and oscillator tubes in an f-m receiver rather than a converter tube?

7- 9. Some converters employ a 0.5 to 2-$\mu\mu f$ capacitor between the signal grid and oscillator grid. What is its purpose?

7-10. How does humidity affect the stability of an oscillator?

7-11. *a.* Why are coils and especially capacitors with low temperature coefficients desired in high-frequency oscillator circuits?

b. How does a capacitor with a low temperature coefficient help stabilize an oscillator to an increase in temperature?

7-12. Define sensitivity as applied to a radio receiver.

7-13. What is meant by the half-power points of a response curve?

7-14. *a.* What are some of the terms used to express the selectivity of a tuned circuit when the range of acceptable frequencies is small?

b. Repeat part (*a*) for appropriate selectivity terms when the range of acceptable frequencies is large.

7-15. *a.* When the range of acceptable frequencies of a tuned circuit is small, is the Q of the circuit high or low?

b. When the range is large is the Q high or low?

7-16. What is the minimum required bandwith of i-f circuits of f-m receivers?

7-17. What are the two main purposes of i-f systems in superheterodyne receivers?

7-18. *a.* What is meant by a stagger-tuned i-f system?

b. What are two of the chief drawbacks to such a system when used in f-m receivers?

7-19. Of the three main f-m detectors, which perform the dual function of f-m detection and a-m rejection?

7-20. In f-m receivers employing the limiter-discriminator method of detection, between what two stages is the limiter system found?

7-21. What are the proper operating conditions for a limiter tube in an f-m receiver?

7-22. Why do the harmonics introduced by the clipping action of the limiter circuit cause no trouble nor interference?

7-23. What causes grid current to flow in the limiter tube?

7-24. *a.* In Fig. 7-15 (A) on page 281, if C equals 100 $\mu\mu f$ and R equals 50,000 ohms, what is the time constant of the circuit?

b. Is the time constant for part (*a*) considered appropriate for the proper operation of a limiter stage of an f-m receiver with an i.f. of 5 mc? Explain your answer.

7-25. In a limiter stage does the positive peak clipping of the input signal take place in the grid or plate circuit of the tube? Where does negative peak clipping take place?

7-26. Neglecting intereference as a cause of amplitude variations in the f-m signal, what part of the f-m receiver contributes appreciably to changing the amplitude of the f-m wave before it enters the limiter stage?

7-27. If after a few minutes of operation of a limiter tube, whose plate current-grid voltage curve is represented by the curve of Fig. 7-15 (B) on page 281, the input signal on the grid of the limiter has a peak-to-peak voltage of 6 volts with a peak-to-peak noise voltage of 4 volts super-imposed on that of the signal:

a. Would any of this noise appear in the output of the limiter? Give a complete explanation.

b. Would any of the noise be eliminated? Give a complete explanation.

7-28. *a.* In f-m receivers having limiter-discriminator detectors, where is the avc voltage (if any) usually taken from?

b. Is the signal from this point ever put to any further use?

7-29. *a.* In a two-stage cascade limiter system, what is the purpose of a large RC time constant for one stage and a smaller one for the other?

b. Does it matter which limiter stage has the high or low time constant?

7-30. If the required threshold voltage for the proper operation of a limiter tube is 3.3 volts and the over-all r-f and i-f gain equals 75,000, what is the minimum value of input signal voltage to the first r-f tube for proper operation of the set?

7-31. What is the polarity of the output signal at point *A* with respect to ground in Fig. 7-22 on page 294, when the instantaneous frequency of the f-m signal output from the limiter is:

a. Equal to 10.7 mc, the center i.f.?

b. Above the center i.f.?

c. Below the center i.f.?

7-32. In Fig. 7-25 on page 297, the curve at the lower left-hand side of the graph indicates the frequency deviation of the f-m signal input to the discriminator at different instants of time. The audio output signal is seen to be changing in amplitude in direct proportion to the amount of frequency deviation of the input signal. Why must this be true in order for the discriminator to reproduce the true audio signal?

7-33. What other names are given to the Foster-Seeley discriminator circuit?

7-34. How is the signal from the plate circuit of the limiter coupled to the discriminator circuit of Fig. 7-26 on page 299?

7-35. Explain how the voltage across *L* in Fig. 7-26 is approximately equal in magnitude and of the same phase as that existing across the primary circuit of the discriminator transformer?

7-36. In a double-tuned transformer circuit where the secondary is center tapped to ground and an input signal is applied across the primary, what is the phase relationship at resonance between:

a. The induced secondary voltage and secondary current?

b. The individaul voltages developed across each half of the secondary?

c. Each secondary voltage and the induced secondary current?

7-37. In the circuit of Fig. 7-26 on page 299, if the conditions are such that the induced voltage and current in the secondary are out-of-phase with each other, what happens to the phase relationship between this induced current and the individual secondary voltages of E_2 and E_3?

7-38. In the circuit of Fig. 7-26, what is the polarity at the cathode of diode D_1 with respect to ground when the resonant frequency of the discriminator transformer is:

a. Lower than the instantaneous frequency of the incoming f-m signal?

b. The same as that of the instantaneous frequency of the incoming f-m signal?

c. Higher than the instantaneous frequency of the incoming f-m signal?

7-39. In the circuit of Fig. 7-26, what is the polarity at the cathode of diode D_1 with respect to ground, when the phase of the secondary current which flows as a result of the *induced* secondary voltage:

a. Lags this induced voltage?

b. Leads this induced voltage?

7-40. Which diode in Fig. 7-26 on page 299 has the greater current flowing through it when:

a. The secondary current lags the induced voltage?

b. The secondary current leads the induced voltage?

7-41. In the circuit of Fig. 7-26 on page 299:

a. If the output f-m signal from the limiter is constant in amplitude at all instants of time, will the magnitude of voltages E_1, E_2, or E_3 change?

b. Will the magnitudes of E_2 and E_3 always be equal to each other?

7-42. Give two important reasons why it is best to have the linearity of the S-shaped characteristic curve of the discriminator at least 200 kc wide, even though for 100-percent modulation 150 kc is the minimum width of linearity?

7-43. Is the inductance L in Fig. 7-26 on page 299 a prerequisite for the proper operation of all types of discriminator circuits? Why?

7-44. In the circuit of Fig. 7-32 on page 308, across what circuit component does practically all of voltage E_1 essentially appear so that this voltage is:

a. Applied to diode D_1?

b. Applied to diode D_2?

7-45. In the circuit of Fig. 7-33 on page 310, across what circuit component does practically all of voltage E_1 essentially appear so that this voltage is:

a. Applied to diode D_1?

b. Applied to diode D_2?

7-46. What is a quick method of distinguishing between a discriminator detector circuit and a ratio detector circuit?

7-47. In Fig. 7-35 on page 314:

a. What is the purpose of the battery?

b. Why is it impractical to use the battery?

c. What is used in place of the battery in the circuits of today?

7-48. What point in the ratio detector circuit of Fig. 7-36 on page 315 is suitable for tapping off an avc signal? Explain.

7-49. What is the reason for inserting resistor R_3 in the quadrature circuit of Fig. 7-39 on page 322? Why?

7-50. *a.* When the instantaneous frequency of the f-m signal input to the third grid of the locked-in oscillator detector is higher than that of the center i.f. of the system, does the magnitude of the pulses of current in the tube increase, decrease, or remain the same?

b. What happens to these pulses when this incoming f-m signal has an instantaneous frequency less than the center i.f. of the system.

7-51. In the vector diagram of Fig. 7-40 (A) on page 323, vector e_{3a} represents the incoming f-m signal when its instantaneous frequency is equal to that of the center i.f. of the transformer of the locked-in oscillator detector. Is the instantaneous frequency represented by vector e_{3c} higher or lower than the center i.f. of the circuit? What about the instantaneous frequency represented by vector e_{3b}?

7-52. Why is it possible to obtain the audio output voltage from the locked-in oscillator detector across the plate-load resistor of the circuit?

7-53. Of the three principal f-m detector systems—namely, the limiter-discriminator circuit, the ratio detector circuit, and the locked-in oscillator circuit:

a. Which two circuits depend upon a certain threshold voltage of input signal for proper operation?

b. Which system is very critical in its balance?

c. Which detector system is the least critical in its balance?

d. Which system requires more careful shielding?

7-54. What does high fidelity mean as far as f.m. is concerned?

7-55. *a.* What component in the audio system of an f-m receiver, because of its high price, puts a practical limitation on the high-fidelity possibilities of the receiver?

b. What component other than the loudspeaker is a major cause of distorted output from an f-m receiver?

7-56. *a.* If in the schematic of Fig. 7-42 (B) on page 333, the inductance L equals 0.5 microhenry, the capacitance C equals 4.2 $\mu\mu f$ (neglecting the distributed capacitances in the circuit), the inductance from that part of the line from W to X equals 0.1 microhenry, and the inductance of the shorting loop equals 0.05 microhenry, what is the resonant frequency of the circuit?

b. As the shorting loop is moved to the left of the schematic of Fig. 7-42 (B), what happens to the resonant frequency of the tuned circuit? Why?

7-57. In some f-m receivers and tuners, an r-f stage is not employed when a duo-triode tube is used as a converter. What advantage does a converter system afford?

7-58. The oscillator padder coil, P_8, of the Pilotuner, Fig. 7-43, page 335, has its inductance effectively varied by changing the position of a metal plate a short distance away from it.

a. Does this metal plate change the physical spacing of the coil windings of the oscillator, P_8, to produce the effective inductance change?

b. How does moving the plate away from the oscillator padder coil affect the frequency of the oscillator? Explain.

7-59. In Fig. 7-43 on page 335, the primary S_2 of the ratio detector transformer does not appear to have any fixed capacitors across its coil, yet the coil is shown as a tunable unit. How is this tuned primary circuit formed?

CHAPTER 8

ALIGNMENT OF F-M RECEIVERS

Every receiver requires that the tuned circuits be correctly adjusted for its optimum operation. Since it is always possible for a resonant circuit to be thrown off its proper resonance by a number of factors, either an inductive or a capacitive component is made variable, so that the proper resonant point can be maintained. The process by which the circuits are adjusted to the proper resonant state is called *alignment.*

Alignment is the most important factor in the servicing of receivers, because a receiver will function perfectly only when it is correctly aligned. The knowledge of alignment for receivers dates back to the time of t-r-f- sets. However, as the years advanced, especially with the coming of the superheterodyne receiver, the alignment procedure became more involved and also more necessary. So far as a-m superheterodyne receivers are concerned, the methods of alignemnt are fairly standard with a few variations existing. The a-m superheterodyne receiver is quite old — about 25 years — and in the course of time a number of changes and improvements have been made, which of course warranted different alignment methods. At present the a-m superheterodynes are more or less standard in design and, therefore, the alignment method is somewhat standardized.

With f.m. the situation is very different. Frequency-modulation receivers have been on the market only about eight years, and remarkable advances have been made during this time. That there exist at least three different types of f-m detector circuits in commercial f-m receivers is only one factor in the continual progress of f-m design. As is natural in all systems, other factors, such as alignment, have to keep in step with the new improvements. This means constantly changing methods of alignment, although each essentially produces the same result, namely the proper functioning of the receiver.

In this chapter we will discuss the two basic methods of f-m receiver alignment which are being used today, namely, the meter and visual

methods. Before we analyze them, let us review our basic knowledge of general alignment theory.

Facts About Alignment

In a-m receivers the method of alignment most universally used is the meter method. An output meter is placed across the speaker voice coil or from the plate of the output tube to B— or ground, and a modulated signal is fed to the receiver. Each of the i-f stages is first aligned to give maximum output on the meter. Afterward, the oscillator and r-f stages are also aligned for maximum meter output. Throughout the alignment the meter remains in the same position, and in this manner the alignment procedure is facilitated. Where no meter was available, alignment of a-m sets has been made by ear, depending only upon the maximum output of the speaker. In aligning the i.f.'s the signal generator is connected to the signal grid of the converter or mixer tube, and its frequency setting is held throughout at the i.f.

The r-f and oscillator alignments are somewhat different in that the signal generator is loosely coupled to the input of the set. This coupling may be made either through a low valued capacitor and then directly to the external antenna lead, or it may be inductively coupled by putting a few turns of wire connected to the generator output around the antenna coil or loop, whichever is used. In all of the stages, alignment is made by varying either the capacitance or inductance of the tuned circuit in question.

From this brief analysis of the usual a-m alignment procedure, we see that we are primarily concerned with the use of two instruments, namely the signal generator and the output meter. Once the meter is placed in position, all that is done is to place the signal generator in different positions in conformity with the usual procedure. Most manufacturers' service data specify the i-f, oscillator, and r-f settings of the generator for this type of alignment. However, certain facts considered accepted practice in alignment are usually so well known that they are very seldom mentioned For instance, in a-m alignment the volume control is usually set at the maximum volume position and the signal generator should use as weak a signal as will cause registration on the output meter. The signal generator should, if possible, have its ground lead connected to the B— of the receiver in question through a capacitor of about 0.25 μf.

A visual method of a-m alignment which has been found to be much quicker and more accurate than the meter method is also used. When originally instituted, this method involved the use of a "wobbulator" and an oscilloscope. Through the use of the wobbulator, an f-m signal could be obtained and the i-f response curves could be seen on the

scope. This method was not used to any great extent, because the system never really advanced to the point where it could be put to much use by the radio serviceman.

In f-m receivers the alignment procedure is rather different because of the detector circuits and the frequency range involved. Both a meter method of f-m alignment and a visual method are used widely today. The meter method of f-m alignment is the more popular, chiefly because of the high price and nonavailability of certain test equipment needed for visual alignment. Manufacturers of test equipment realize the great amount of time saving and the greater accuracy involved in the visual alignment of f-m receivers and are designing new types of f-m signal generators and oscilloscopes that will be priced for the average radio serviceman.

The visual method of alignment for f-m receivers is by far the quicker and more accurate of the two. The importance of this alignment procedure is further emphasized by f-m receiver manufacturers, who are including the method in their service notes as an alternate means of alignment. One of the main reasons this alignment method is so very suitable is that we are dealing with an f-m receiver and for visual alignment we also need an f-m signal generator. This generator, which produces a true f-m signal with a variable frequency deviation, provides a quick and accurate means of alignment, as will become evident later.

METER METHOD OF F-M ALIGNMENT

Since the meter method of f-m alignment was the first to find extensive use we will discuss it first. In the discussion of this method, as well as the visual method, we will first deal with detector alignment, as most manufacturers suggest starting with this circuit and working backwards, as with an a-m alignment. However, this is not a necessity, because the detector can be aligned last. Since the transformer involved in the different detector circuits is tuned to the i.f., detector alignment can be considered as a stage of i-f alignment. These detector stages of f-m receivers are responsible for making f-m alignment so different from that of a-m receivers.

Since the limiter works with the discriminator detector circuit, it will be discussed in conjunction with this detector; although the limiter system also can be considered as the last part of the i-f amplifiers. After the detector stages we will discuss the i-f alignment and then follow with the oscillator and r-f sections in the same order as in a-m receiver alignment.

The only essentials for the meter method of f-m alignment are a signal generator which will cover the f-m band and, also, the i.f. and a microammeter which also can be used as a voltmeter by adding a

high resistance in series with it. The generator does not have to be frequency or amplitude modulated but simply has to generate an r-f signal.

Discriminator Detector Alignment

Alignment of the discriminator means that the discriminator transformer is actually being tuned to its proper i-f resonant points. The observation of correct alignment for this stage is made by placing the meter across the output circuit of the discriminator in a certain manner and then adjusting the proper controls. To understand this alignment procedure, a typical discriminator circuit is illustrated in Fig. 8-1 in conjunction with the limiter stage preceding it. We already know from the discussion on discriminators in chapter 7 that when the discriminator transformer is properly tuned to resonance and the

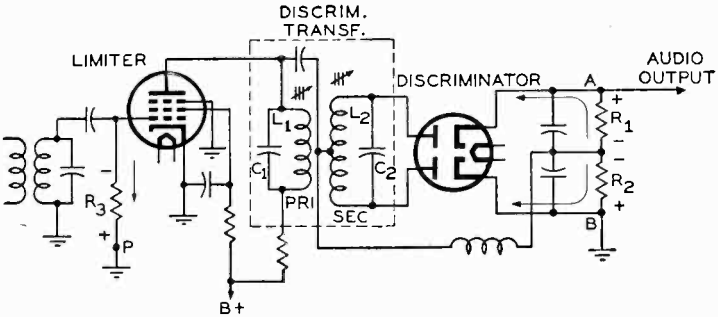

Fig. 8-1. Aligning the discriminator consists of tuning the transformer, L_1-L_2, to the proper i-f resonant points. A high-resistance voltmeter, a vacuum-tube voltmeter, or a zero-center meter is used as the indicator.

incoming signal is equal to this resonant frequency, there will be no output across resistors R_1 and R_2, that is, between points A and B. This is so because the currents flowing through the diodes and, hence, through the individual load resistors equal each other, flow in opposite directions, and cause equal voltage drops across each load resistor. Alignment of the discriminator is based upon this fact.

In aligning this transformer the primary circuit tuning adjusts the linearity of the discriminator response. The exact balance or symmetry of the response is determined by the secondary. The manner in which the circuit of Fig. 8-1 is aligned is as follows: The signal generator is placed at the grid of the limiter tube and set to the i.f. of the receiver. If a high-resistance voltmeter, preferably a vacuum-tube voltmeter, is available, place it across either one of the load resistors R_1 or R_2, preferably R_2, since one end of this resistor is grounded. If only a

microammeter is available, put a high valued resistor in series with it and connect this arrangement across either load resistor. With either one of these connections made, the output of the signal generator should be made just high enough so that a decent reading is seen on the meter. A certain polarity of voltage exists across R_1 or R_2 which is determined by the current flow in the diodes. Since current flows from cathode to plate, the potentials that exist across R_1 and R_2 are as indicated in Fig. 8-1. When connecting the meter across R_1 or R_2 the potentials across each should be observed.

With these preliminary connections made, adjust the variable component in the discriminator primary circuit first; in Fig. 8-1 the inductance L_1 is varied. Upon proper tuning, the maximum reading on the meter indicates proper alignment of the primary. To insure that the proper point has been reached, it is good practice to "rock" the coil slightly back and forth, hitting on either side of the maximum deflection point, and gradually decreasing the swings until the maximum value is reached. This assures greater accuracy in tuning.

The next step is to align the discriminator secondary. With the generator set exactly as in the former alignment, take the meter previously used and connect it across the complete discriminator load, namely from point A to B. Next, tune the discriminator secondary inductance (as in Fig. 8-1) until a zero reading is obtained on the meter. This indicates that the secondary is properly tuned. Since most voltmeters have a zero scale reading that is difficult to approach because it is at the bottom of the scale, a zero center type meter is the best type to use for the secondary alignment as well as the primary. This type of meter is similar to a galvanometer in that on one side of the zero mark the readings are positive and on the other side, negative. The zero output point can be quickly and accurately found by a rocking method such as that discussed for the primary circuit. Such a zero center meter is also perfect for the primary alignment, as we do not have to worry about polarity hookup and we can depend on any maximum reading. In using such meters, knowledge of how much voltage can be registered is important, because such meters are very sensitive and can be easily damaged. However, there are some meters with provisions for varying the sensitivity.

Since the secondary is tuned last, there may be a possibility that the linearity of the response is not true to form. A quick check of this is to choose a number of frequencies within the 75-kc peak deviation range on either side of the i.f., and to check the voltages across both load resistors. The i.f. plus 40 kc should give the same amplitude of voltage from A to B as the i.f. less 40 kc. The voltages although equal in magnitude should be opposite in polarity. A number of such points should be chosen for an over-all check on linearity, and, if they do not check closely, the primary should be retuned.

Limiter Alignment

The alignment of the limiter system which employs only one stage is quite easy. It is based upon the fact that, when the limiter i-f transformer (which is the last i-f transformer) is properly tuned to resonance, the maximum input signal will appear on the grid of the limiter. By the nature of the potentials on the limiter tube, maximum grid current then will flow through the grid bias resistor. This maximum current flow is used in aligning the limiter stage, as well as the rest of the i-f stages.

In dealing with a single limiter, the signal generator is placed at the grid input to the last i-f stage preceding the limiter and still tuned to the i.f. of the receiver with an unmodulated signal. The meter should be placed in the grid circuit to record the point of maximum current flow. The best instrument to use is either a simple d-c microammeter or sensitive milliammeter which should be placed in series with the grid resistor between the low side of the resistor and ground. This is indicated in Fig. 8-1 where point P indicates that the ground connection of R_3 should be opened and the ammeter inserted. In connecting the meter remember that, due to the direction of current flow, the potentials on R_3 are such that the top or grid side is negative with respect to ground. This means that the positive terminal of the ammeter should be connected to ground and the negative terminal to the resistor. To be on the safe side, a milliammeter should be used to record the current flow, but if the value of grid leak resistance is high, a microammeter can be used. If one is not sure which meter to use, it is best to start with a milliammeter and then, if the current reading is too low, to change over to a microammeter.

If a vacuum-tube voltmeter or some sort of high-resistance voltmeter is available it, too, can be used satisfactorily. This voltmeter is placed across the grid leak resistor and, since maximum current will flow at the proper alignment, a maximum voltage drop across the grid resistor will be the result. If the voltmeter used has a very high input resistance or if some high valued isolation resistor is used in series with the meter, it can be connected to the grid of the limiter and the grid return which may be B— or ground. Care should be taken to use a high-resistance voltmeter, because a low-resistance voltmeter will produce an additional load on the circuit and, possibly, throw the resonant tuning of the transformer off its true peak frequency point.

Some limiters employ two grid resistors, one of them usually a much smaller value than the other. This arrangement makes it possible to use a low resistance voltmeter without mistuning the circuit. If such a second resistor is present, it is safer, no matter which type of voltmeter is available, to connect the meter across the low valued resistor. If two grid resistors are present and an ammeter is to be used, the

meter should still be placed between ground and the bottom of the last resistor, with the same observance to polarity.

After the meter arrangement is decided upon, the output of the signal generator, which is tuned to the i.f., should be the minimum necessary for a reading on the meter. This preliminary adjustment for a low input signal makes sure that the limiters do not start to saturate. For if they do the tuning adjustments will be very broad and it will be difficult to find the true resonant position of the i-f transformers. With this in mind, first the secondary of the last i-f transformer is tuned for a maximum reading on the meter, and then the primary is tuned. If tuning the secondary swings the needle of the meter way up, indicating that the transformer was quite off resonance, the output of the signal generator should be cut down to a point where the meter will just indicate deflection. After the signal generator's output is thus diminished, the primary of the last i.f. should then be tuned for a maximum reading. As in the alignment of the discriminator, a rocking method should be used for accuracy in finding the resonant points.

If two limiter stages are employed, we have to consider the type of coupling between the stages. Slightly different procedures of alignment are followed for the tuned and the untuned, such as the R-C or impedance coupled, types. With untuned coupling between the limiter stages, place the meter in the grid circuit of the first limiter in any manner previously described. The signal generator should then be placed at the input to the last i-f stage similar to the single-stage limiter circuit, and the alignment then proceeds in the same manner.

When the coupling between the two limiter stages is tunable, the meter is placed in the grid circuit of the second limiter rather than the first. The signal generator is then placed at the grid input to the first limiter. Alignment is secured by adjusting the tuned circuit between both limiter stages for maximum output on the meter. After this adjustment the meter should remain in the second limiter grid circuit, and the signal generator should remain connected to the grid input of the last i-f stage with the frequency still set at the i.f. Then the tuned transformer circuit preceding the first limiter stage is similarly aligned for maximum readings on the meter in the second limiter grid circuit.

It should be remembered that, in the alignment of all types of limiter circuits, the output of the signal generator should be kept as low as possible consistent with maintaining a readable deflection on the meter. This same rule should be followed in the i-f alignment.

I-F Alignment of Receivers Employing the Limiter Discriminator

The meter method of i-f alignment is quite simple — if all the i-f transformers are single peaked. For the i-f alignment, which immediately follows the limiter alignment, only the signal generator is re-

moved and placed in another position. The indicating meter remains in the position it had during the limiter alignment. Up to this point all the tuned stages following and including the last i-f transformer have been aligned. If a set contains three i-f transformers, not including any transformer between cascaded limiters, the third transformer is the first unit aligned. Consequently, the second i-f transformer is the next one to be aligned. To do this, the signal generator is placed at the grid input of the i-f amplifier preceding the second i-f transformer, or at the signal grid of the mixer tube. The output of the generator is still kept at a minimum, and the frequency tuned to the same unmodulated i.f. The second i-f transformer is then aligned, starting with the secondary first and the primary last, for a maximum deflection of the meter in the limiter circuit.

After this stage is aligned, the generator is moved (if necessary) to the r-f input section of the mixer or converter tube and still tuned to the same i.f. The meter still remains in the limiter circuit, and the first i-f transformer is similarly aligned for maximum reading on the meter. This finishes the i-f alignments. With the meter and generator in the afore-mentioned position, a quick over-all check on the complete alignment thus far can be made by connecting a vacuum-tube voltmeter or, preferably, a zero center voltmeter across the complete discriminator load. The voltmeter should read zero at this output frequency from the generator, and the grid meter a maximum. By changing the frequency on either side of the i.f. by the same fixed amount and noting the meters we can determine the accuracy of the alignment. The discriminator load meter should read the same voltage on either side of the i.f. but of opposite polarity. The limiter grid meter should also read the same value on either side of the i.f., but the polarity remains the same. A number of such plus and minus off-resonant frequency i.f.'s should be used for a more complete over-all alignment check on the i-f and limiter-discriminator circuits.

In their service notes many manufacturers consider the i-f and limiter alignment in an over-all procedure. For example, the indicating meter to be used is placed in the proper limiter grid circuit, the signal generator output is connected to the r-f grid input of the converter or mixer tube, and the frequency is adjusted to the i.f. of the receiver. With these two instruments remaining in position, the very last i-f transformer, including any between two cascaded limiters, is aligned first for maximum output reading. The other i-f transformers are then aligned, working from the back to the front of the receiver in the same manner. The signal generator's output should always be kept at a minimum for reasons previously mentioned. The reason for such a quick alignment method is that manufacturers assume that the receiver, if mistuned, cannot be too far off alignment. However, for

over-all accuracy in the meter method of alignment the former method is definitely recommended.

The i-f alignment just discussed is quite easy and simple to understand. The simplicity is primarily due to the fact that all the i-f transformers were single peaked, and the maximum reading point at the meter indicated that the peaks of the i.f. had been reached. In f-m receivers that employ overcoupled or double-peaked i-f transformers, it is not so easy to follow the same method. The difficulty lies in the shape of the overcoupled i.f.'s response curve. If you will recall (see Fig. 7-9), the overcoupled response curve has two side peaks that are higher in amplitude than the actual resonant frequency of the transformer. In aligning such a stage, therefore, a maximum reading may indicate that one of the peaks has been reached and not the resonant frequency. It is quite cumbersome to shift the frequency setting of the signal generator in an attempt to find both peaks, so that the point of resonance can be found.

If it is known which i-f stages are overcoupled, a very simple procedure can be followed. It is known that if we load a tuned circuit with a resistance, its effective Q decreases and its over-all frequency response characteristic changes. The resistance reduces the over-all gain of the stage, but at the same time it brings down the double peaks at a quicker rate than the resonant point decreases. The effect of this loading is to produce a new response curve with a single peak which can be easily determined. Therefore, in aligning an overcoupled stage, a low valued carbon resistance, between 200 and 500 ohms, is soldered across the secondary of the overcoupled i-f transformer. The leads of the resistor should be as short as possible, so that they will not introduce any capacitive or inductive effects which may detune the circuit. This is important because of the high frequencies involved. After this is done, the signal generator may be placed at the grid input of the tube preceding the overcoupled i-f transformer for greater accuracy, rather than at the signal grid of the mixer tube, and the output frequency set at the i.f. of the set. The meter of course remains in the limiter grid circuit. The secondary and then the primary are adjusted for maximum deflection on the meter. This point of deflection will not be so sharp as the others because of the wide and almost level response that occurs with low Q circuits. Therefore, care must be taken in tuning the i-f transformer to make sure the peak has been reached.

Before advancing to any other stage, the resistor should be removed from the overcoupled transformer and the same alignment followed with any other overcoupled transformers. After all such transformers have been aligned (there is usually only one overcoupled, the second i-f transformer), the rest of the i.f. is aligned as previously outlined.

At the frequency of the i.f., the loading network, due to the introduction of unwanted capacitance effects, may cause detuning in the

i-f transformer. This is highly undesirable since it can be a cause of faulty alignment of overcoupled i-f stages. To keep the amount of detuning to a minimum when using loading networks for overcoupled i.f.'s, the connecting leads of the loading network should be as short as possible. Furthermore, the loading network should be arranged to offer as small stray capacitance effects to ground as possible. The meter method of aligning overcoupled i-f transformers thus has its disadvantages. For true accuracy, these i-f's, as well as the rest of the f-m receiver, should be visually aligned. This does not require loading networks across the i-f transformers, and consequently mistuning will not be present. Visual alignment procedure is discussed later in this chapter.

R-F and Oscillator Alignment

The alignment of the r-f and oscillator circuits is very similar to that used for a-m receivers. One receiver may use more tracking coils or capacitors than another receiver, but this information is usually supplied by the manufacturer's service data.

As in a-m alignment, some sort of dummy load is used to couple the r-f signal generator to the antenna circuit. The meter still remains in the grid circuit of the limiter. The specified alignment of the r-f and oscillator sections differs somewhat with different set manufacturers. Some suggest starting at the high end of the band and working down, while others stipulate that alignment should start at the low end of the band, and still others suggest going from end to end and finally to some middle point of the band. The final result will essentially be the same if the complete alignment instructions are followed and if they are repeated more than once. It should be remembered that some circuits have more trimmers and tuning slugs than others. By the use of these extra adjustments, a finer alignment can be perfected over the entire band as long as we know which variable components to tune.

For the purpose of discussion we will start at the high end of the band. The signal generator is set on an unmodulated frequency somewhere around 105 mc, and the receiver dial is also set to this frequency. The necessary oscillator trimmers and/or tuning slugs are then adjusted for maximum output in the limiter grid meter. It should be remembered that here, too, the output of the signal generator must be kept low enough just to indicate a maximum reading on the meter in order to avoid saturating the limiter. After the oscillator is adjusted, then vary the necessary r-f trimmers and/or tuning slugs for maximum output on the meter. If there is more than one r-f tuned circuit, adjust the one used as the input to the mixer or converter first and then adjust the others, working back to the antenna. Usually not more than two r-f tuned circuits are employed.

A check should be made to determine whether or not the dial set-

ting is *exactly* what the oscillator and mixer trimmers have been adjusted to. If the previous maximum point on the indicating meter rises when the receiver dial is rotated on either side of its setting of 105 mc, the oscillator and r-f are not correctly aligned. When this occurs, the oscillator circuit should be retuned and then the r-f circuits. A quick method of finding the r-f peaks is to "rock" the dial knob very slightly on either side of the 105-mc setting while adjusting the r-f trimmers. If the receiver dial does not tune exactly back to 105 mc at the maximum deflection of the meter, the dial should be slowly turned to the 105-mc position while the necessary oscillator trimmers are retuned for maximum output until the 105-mc point is reached.

After making sure this alignment is correct, set the receiver dial and signal generator to some low frequency at the other end of the band, say 90 mc. The next step is to align the oscillator again, using only the necessary trimmers or padders, as they are often called, for the low-frequency adjustments. Align for maximum output on the meter. Next adjust the r-f stages in the order just described, for maximum meter output, while rocking the dial. Check these low alignment points in the same manner as the high end, and if misaligned, readjust as indicated. After this low-frequency end has been adjusted, go back to the high end and check the alignment there and readjust if necessary.

The foregoing procedure will usually suffice for routine alignment. However, for greater accuracy when a set is badly aligned to begin with, a point or two within the middle of the dial may be chosen, and the signal generator set to this frequency. The oscillator and r-f stages are then checked to see if they are likewise aligned on these center frequencies. If not, readjust the necessary trimmers. After all these steps have been completed, it pays to recheck the low and then the high end again.

It should be remembered that some manufacturers only give data for aligning on the high end of the band for the complete r-f and oscillator alignment.

Ratio Detector and I-F Alignment

A number of methods of aligning ratio detectors are in use today. Some are more accurate than others, but, comparatively, take a little longer. Three of the principal methods will be discussed, and from the separate analyses a choice can be made. Although the circuits arrangements for ratio detectors differ somewhat, the schematic of Fig. 8-2 will suffice for all the methods to be outlined. In some methods the primary of the detector is aligned first, all the i-f stages next, and the secondary of the ratio detector last. Other methods align the complete detector first and then work backwards with the i.f.'s as usual. Since it

is believed the latter method is somewhat more accurate than the others, it will be studied first.

For this alignment a high-frequency signal generator and a vacuum tube voltmeter or a zero center meter are needed. The meter is first connected across resistor R_1 to ground; in other words across the resistance-capacitance time constant network in the output circuit. The signal generator is connected to the grid of the last i-f stage and set to the i.f. of the receiver. The primary of the ratio detector transformer then is adjusted for maximum output on the meter. This indicates that maximum current is flowing through R_1.

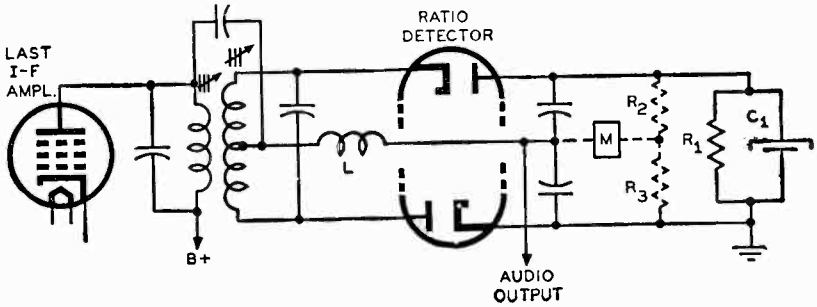

Fig. 8-2. Schematic of a typical ratio detector circuit. In some alignment methods the detector primary is aligned first, then the i-f stages, followed by the detector secondary. In other methods, the complete detector is aligned first and then the i-f stages.

To tune the secondary properly, the circuit should be symmetrical. In Fig. 8-2, the output load resistor R_1 sometimes consists of two separate but equal valued resistors, which would make the secondary tuning very easy. However, if no such double resistors exist, take two high valued resistors about 100,000 ohms each and solder them across the load resistor, R_1 as shown by R_2 and R_3 in Fig. 8-2. The values of these resistors should not differ from each other by more than 5 per cent, otherwise the circuit will not be symmetrical when the secondary alignment is made. With this completed, connect the indicating meter between the center of the two resistors and the point of audio output. This is shown in Fig. 8-2, and this arrangement readily shows how symmetry exists across both diode circuits where coil L and the meter are common to both circuits. With the signal generator still at its previous position and frequency setting, the secondary of the ratio detector transformer is tuned until a zero reading is observed on the meter. This indicates that the secondary is aligned.

After the discriminator transformer is aligned, remove any resistors that may have been attached for alignment purposes, and place the meter once more across the load resistor, R_1 in Fig. 8-2. With the meter in this position for the rest of the receiver alignment, adjust the i.f.

first and then the oscillator and r-f circuits in any one of the previous methods outlined. All adjustments should be made for maximum output on the indicating meter.

A second method of ratio detector alignment is to detune the secondary of the detector coil by turning the adjustable component all the way out. This is done before any actual alignment is started. The purpose of detuning is to make sure that the transformer secondary has no resonant effects while the other stages are being tuned. The signal generator is tuned to the i.f. (unmodulated), and it is placed either at the r-f grid of the converter or at the control grid of the last i-f tube. If it is placed in the former position, it remains there for the complete i-f and detector alignment, but when in the latter position it has to be moved toward the front of the receiver in conjunction with the stage to be aligned. The meter is then placed between the point of audio output and the junction between the two load resistors in the output. If only a single load resistor exists, temporarily attach two equal but high valued resistors across the output during the complete alignment of the receiver.

With these preliminary adjustments made wherever necessary, tune the primary of the ratio detector coil for maximum output. Maximum output now indicates alignment because the secondary of the detector transformer has been completely detuned. Working backwards, tune the last i-f transformer's secondary and primary coils for maximum output and so on for the other i-f transformers. After all the i.f.'s are aligned, adjust the discriminator secondary for zero voltage output on the indicating meter.

For the oscillator and r-f stages place the meter across R_1 and adjust these stages for maximum output, as outlined in the section of the oscillator and r-f alignment of the limiter-discriminator receiver.

A third method involves the use of an a-m signal and a simple output meter applied across the speaker voice coil. In this method, the ratio detector secondary is also completely misaligned by turning its trimmer capacitor or tuning slug way out. The signal generator is either placed at the converter grid or last i-f amplifier grid and set to the i.f. of the receiver. This frequency should be amplitude modulated. If the generator is placed at the grid of the last i-f tube, then in aligning the i-f stage we work backwards, as in other methods. This alignment is based upon the fact that detuning the detector secondary throws it completely off any possibility of resonance within the range of operation, and, therefore, the detector circuit is unbalanced. As a result of this degree of unbalance, the ratio detector is able to respond to amplitude changes as well as frequency changes in the applied signal. Consequently, an output meter is placed across the voice coil as mentioned, and an a-m i-f signal fed into the circuit.

The primary of the ratio detector transformer is aligned first for

maximum audio output on the meter. Then working backwards, the i.f.'s are aligned for maximum output, in a similar fashion to the other detector systems. After the i.f.'s, the oscillator and r-f stages are aligned. The alignment for these sections is the same as in the other methods, but for this method the output of the generator is constantly amplitude modulated and the alignment is for maximum indication on the output meter. After the i-f, oscillator, and r-f stages are all aligned, the signal generator is placed at the r-f grid of the converter and set to the i-f signal of the receiver. The signal is still amplitude modulated. Then the secondary of the ratio detector transformer is adjusted for *minimum* reading on the output meter. This reading may be difficult to find, so it is suggested the adjustment be made very slowly until the minimum point is found. Realign this stage once or twice more to make sure the same minimum point is reached.

Locked-In Oscillator Detector Alignment

The meter method of alignment of a locked-in oscillator circuit is quite different from the other two detector circuits. At the time of this writing, Philco is the only manufacturer employing the locked-in oscillator detector, so the alignment method described will center around Philco receivers, models 46-1213 and 48-482.

An a-m signal generator and an output meter are needed. The output meter is placed across the voice coil of the speaker and remains there throughout the complete alignment. To turn this set to the f-m position, the f-m push button has to be depressed. Other preliminary adjustments required include turning the volume and treble controls to their maximum clockwise positions, and turning the bass control to its maximum counterclockwise position. The ganged tuning capacitors should be fully meshed. The detector tube used in this unit is the special Philco FM 1000.

In this receiver it is best to adjust the i.f.'s first, then align the detector circuit, and the oscillator and r-f networks last. This is similar to some of the f-m receiver alignments previously discussed. To align the i.f.'s, the detector is first made inoperative from the standpoint of its operating as an f-m detector. To accomplish this, the first grid of the detector, the oscillator grid, is directly grounded. Refer to the locked-in oscillator detector schematic of Fig. 8-3 (this circuit is the same as Fig. 7-39 but is redrawn here for easier reference). Grounding this grid makes the oscillator inoperative, and hence the locked-in effect or f-m detection is ineffective. Although the circuit is inoperative as far as f-m detection is concerned, it does function as an a-m grid-leak detector, and an a-m signal can be used to align the i-f stages.

According to manufacturer's specifications, the signal generator is placed at the r-f grid of the converter, and the i.f.'s are then aligned.

However, it is also possible to connect the signal generator to the grid of the i-f amplifier tube preceding the transformer being aligned. In either method the i-f transformers are aligned from the last i.f. to the first. In checking the i.f.'s, the signal generator is set to the intermediate frequency of the receiver which is 9.1 mc. This output signal is amplitude modulated preferably at 400 cycles, but other frequencies can also be used. The alignment procedure, as carried out by the John F. Rider Laboratories essentially works as follows:

If the output of the signal generator is strong enough, it should be placed across the grid of the i-f amplifier preceding the i-f transformer to be aligned. Otherwise it should be placed across the grid of the preceding i-f amplifier and so on toward the front end of the receiver until the output can just be detected. The secondary of the last i-f transformer is aligned first and the primary next, both for maximum reading on the output meter. The same type of alignment is followed for the other i-f transformers, working backward toward the front end of the set until the first i-f transformer is aligned last. To align this last i-f transformer the output from the signal generator is placed at the signal grid of the mixer tube. Throughout this alignment the signal generator is set at an a-m signal of 9.1 mc. As an alternative method of aligning the i-f's a VTVM (vacuum tube voltmeter) is placed across the avc bus and not the output meter. The alignment is made as in the previous case, except that it is made for maximum readings on the VTVM. With this method the oscillator grid of the lock-in detector tube does not have to be grounded. The VTVM should not be placed directly at the diode plate (that delivering the avc voltage in f.m.) because this would tend to load down the final i-f transformer.

After the i-f's, the detector circuit is aligned. The ground (if any) from the oscillator grid of the detector tube is removed. For this alignment the output meter is placed across the speaker voice coil.

The signal generator is placed at the grid of the last i-f amplifier tube and set at the 9.1-mc i.f. of the receiver, but the signal should be *unmodulated.* The quadrature network is then short-circuited out by placing a jumper wire across it. This permits exact alignment of the oscillator section of the FM 1000 detector tube. The oscillator circuit is then adjusted by varying the oscillator trimmer C_2 in Fig. 8-3 until a zero reading is obtained in the output meter. This is sometimes referred to as a zero beat or a minimum response point. A zero beat note indication should also be obtained in the loudspeaker. This alignment indicates that the oscillator frequency and input signal generator frequency are exactly equal, because, when beating inside the FM 1000 detector tube, a zero beat note is obtained. In other words, the difference frequency is zero.

The short circuit across the quadrature network is removed to com-

plete alignment of this stage. The signal generator remains where it is with the strength of its output signal kept low enough so that the oscillator of the FM 1000 tube does not lock-in with the incoming signal. As mentioned in chapter 7, a minimum input signal must always be maintained for proper lock-in action, therefore, we are trying to keep the signal generator below this threshold. If this procedure is used, a zero beat note will also be indicated in the loudspeaker, and the output meter will read zero by proper adjustment of the quadrature coil L_3 in Fig. 8-3. A false zero beat note will be the result if the output of the signal generator is not kept low enough.

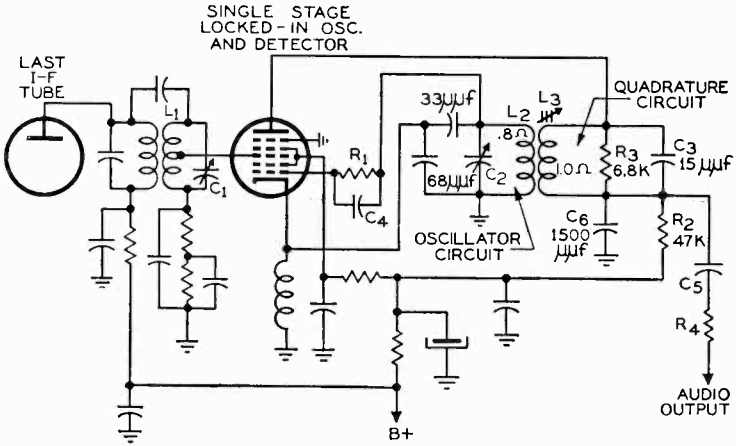

Fig. 8-3. Schematic of the locked-in oscillator and detector circuit, which is aligned by first adjusting the i-f stages, then the detector, high-frequency oscillator, and the r-f networks last.

Next to be aligned is the front end of the receiver, namely, the high-frequency oscillator and r-f stages. To align these stages with an a-m signal generator, the first grid of the FM 1000 detector tube (its oscillator section) is again grounded so that the tube will once more function as an a-m detector. The signal generator is then connected to the high side of the f-m antenna socket. The receiver dial is set to some frequency on the high end of the band, for example, 105 or 106 mc, and the generator likewise set to the same frequency. The output signal from the generator should be amplitude modulated.

This effectively puts the generator signal at the grid input of the first r-f amplifier of the receiver. The high-frequency oscillator trimmer capacitor then is adjusted for maximum reading on the output meter. With the connections as they are, turn both the signal generator and receiver dial to the *same* frequency somewhere at the low end of the f-m band between 88 and 90 mc. At this setting the oscillator

coil is adjusted for maximum output. The coil is not permeability tuned and consists of approximately 3½ turns of wire. To align it the physical spacing between its turns is corrected to give maximum output on the meter. These two oscillator adjustments should be realigned a few times for best results.

With the signal generator and receiver dial returned to the high-frequency position, adjust the r-f trimmer capacitor for maximum output while "rocking" the receiver dial as described in previous alignments. Tune the r-f trimmer for maximum output. Next similarly adjust the antenna trimmer.

The r-f and antenna coils, each consisting of about 3¾ turns of wire, are aligned next, starting with the r-f coil. The signal generator and receiver dial are once again turned down to the low-frequency end of the band and set at the same frequency. For this alignment the frequency setting should be about 2 mc higher than the previous low-frequency setting. The r-f coils are aligned similarly to the oscillator coil by varying the physical spacing of the coils, spreading or compressing them to conform with maximum meter reading. The r-f coil is usually aligned first.

For very accurate adjustments these r-f trimmers and coils should be realigned a few times. The manufacturer suggests that a tuning wand be used for checking and for determining whether the oscillator and r-f coils should be spread apart or compressed. A tuning wand is a rod-shaped object, one end of which is brass and the other powdered iron. The method of testing is to insert into, or place near the coils, first one end of the wand and then the other. If the brass end causes an *increase* in output meter readings, the coil should be spread slightly, and if the powdered iron end increases the output meter reading, the coil turns should be compressed. When the output meter decreases upon the insertion of either end of the wand into the coil, the coil is then properly adjusted. It should be remembered that we are dealing with very high frequencies, and a slight change in inductance can cause a large change in frequency. Consequently, the adjustments of the coils must be made with care, so that any expansion or compression causes only a slight change in the physical spacing between the coil windings.

VISUAL METHOD OF ALIGNMENT

Quicker and more accurate than the meter method, the visual method of alignment for f-m receivers involves the use of an oscilloscope and an f-m signal generator. The same points of alignment used in the meter method are used. Essentially, the oscilloscope replaces the meter, and an f-m signal generator replaces the previous generator. In this method of alignment, we actually *see* the response curves

of the i-f's and detector circuits, whereas in the former method we had only maximum points as indicated on a meter. With the visual method it is not necessary to make special tests on the linearity of the detector or to load down overcoupled i-f transformers.

The oscilloscope itself is a voltage indicating device and, hence, has to be placed *across* the particular circuit to be measured. To measure current waveforms, the current in question is made to pass through a resistor, and the oscilloscope is placed across this resistor. Though a voltage is being measured, essentially a current waveform is converted into a voltage waveform and then the measurement is made. However, since the resistor produces no phase change in the current, the voltage waveform measured is essentially a reproduction of the current waveform. For this reason the oscilloscope is placed across the limiter grid resistor and not in series with it.

For visual alignment, it is important to know what type of signal is being used to frequency modulate the r-f oscillator within the f-m generator. Type of signal is meant here in the sense of wave shape rather than frequency. With this information, therefore, we know what type of wave shapes to expect in viewing the oscilloscope.

Most f-m signal generators have internal sine wave modulation though some generators also provide for external modulation. If sine wave modulation is employed, the modulating sine wave is often used as an *external sweep* in conjunction with the oscilloscope. To learn the wave shape appearing on the oscilloscope screen in this case, let us apply an f-m signal to any type f-m receiver and check on the S-shaped characteristic of the detector.

F-M Signal Generator With Sine Wave Modulation

If the f-m signal generator has sine wave modulation, this modulating signal should also be brought out to a special outlet on the generator chassis. This is so that the same modulating voltage may be used as the external sweep for the oscilloscope to obtain perfect syn-

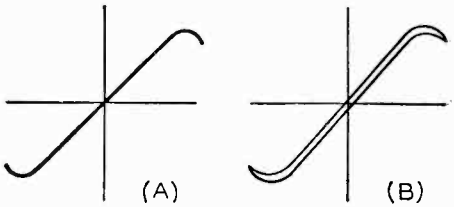

Fig. 8-4. When the detector system is correctly balanced, the S-curve oscillogram will be as in (A), but if the balance is not perfect or if phase distortion exists, a double S curve results as in (B).

chronization without any adjustments. With respect to the S-shaped characteristic of a detector, the picture on the scope will be similar to that shown in Fig. 8-4 (A) or (B) when this type of generator is used. Both pictures essentially consist of two S curves. In Fig. 8-4 (A) the

curves are exactly alike due to perfect over-all balance of the detector system and distortionless output of the signal generator, in which case one curve coincides with the other and only one curve is actually seen. If the system is not in perfect balance or if the output from the signal generator is distorted, both curves will appear similar to that shown in Fig. 8-4 (B). This picture indicates a phase difference between the two curves which should not exist. In each case we consider this type of generator to produce a single S curve.

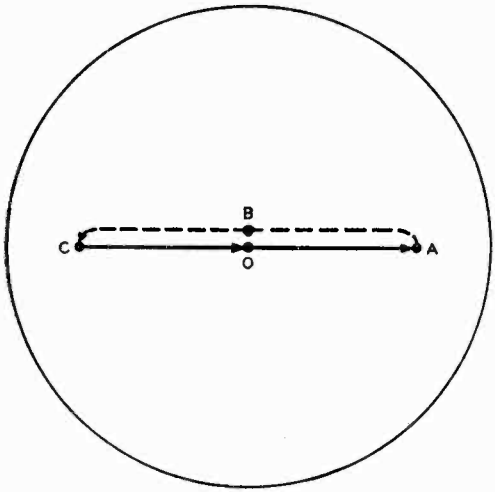

Fig. 8-5. The movement of the beam of a cathode-ray tube or the spot in tracing a pattern on an oscilloscope screen with a sine-wave input only on the horizontal plates is: the spot starts at *O* (zero voltage) and travels to *A* to the maximum positive peak, then through *B* to *C* to the negative peak, and then back to *O* (zero voltage again), completing the cycle. The dotted line really coincides with the solid line.

That only one curve effectively appears is due to the sine wave sweep. With the oscilloscope turned on and with no input signal applied, a spot appears on the screen which is usually centered by manipulation of the correct controls. The vertical plates of the oscilloscope are connected across the output of the detector circuit, and the horizontal plates receive the sine wave output of the signal generator. The internal sweep of the scope is in the off position. Without a sweep signal, only a straight vertical line would appear on the screen of the oscilloscope. With sine wave sweep voltage applied the S characteristic, which actually consists of two individual S curves, then appears. The action is best explained by considering the movement of the electron beam or spot on the oscilloscope when only the sine wave sweep is employed.

Assume that the sine wave starts from a zero position and is increasing positively. While the sine wave is increasing to its maximum peak, an increasing positive voltage is constantly applied to the horizontal plates. This causes the beam to shift all the way over to one side. We will assume that it is the right side of the screen. In Fig. 8-5 this

movement is represented by the solid line *OA*. From the positive peak of the sine curve to the negative peak of the same curve, the input sine wave voltage is decreasing, in which case the spot reverses its direction and moves from point *A* on the screen to point *C*, as shown by the dotted lines. At point *B* the sine wave crosses its baseline which coincides with point *O*. To complete one cycle of sine wave, we travel from the negative peak to the baseline again which is in a positive direction. Consequently, the spot on the screen moves from point *C*

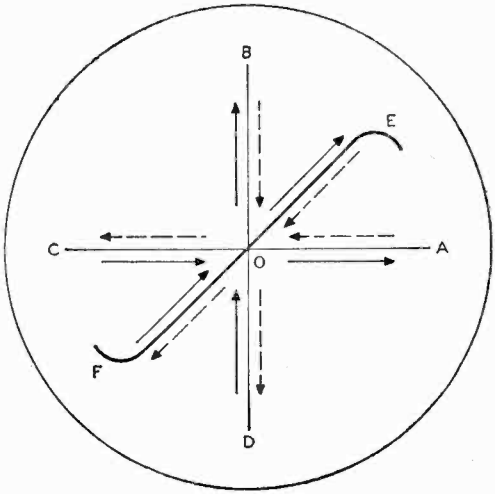

Fig. 8-6. How the S-curve pattern is developed on the oscilloscope. Line *OA* represents the increasing amplitude of the modulating sine wave, and *OB* represents the increase in frequency of the modulating audio and hence the frequency deviation of the f-m signal. Lines *OC* and *OD* represent the decreasing amplitude and frequency of the signal respectively. The solid arrows indicate an increase in amplitude or frequency, and the dashed arrows a decrease.

back to point *O*, shown by the solid line, thus completing the cycle. What actually happens is that from point *A* when the spot is moving to the left, it is really moving over the same line traced out by *OA*, but in the picture of Fig. 8-5 it is shown slightly displaced for the sake of illustration.

From this analysis it is readily seen that, during any one cycle of sine wave input to the horizontal deflection plates, the beam effectively traverses the screen in one direction during one half of the cycle and retraces its same path, but in the opposite direction, during the other half cycle.

With this much explained we can now show how two S curves are traversed during application of the signal to the vertical deflection plates. In Fig. 8-6 line *BD* represents the vertical input signal as it appears on the scope without any horizontal deflection, and line *AC* represents the horizontal sine wave deflection as it appears on the scope without any vertical deflection. With both of these signals applied to their respective deflection plates two coinciding S-shaped curves will be traced out. It should be remembered that the same modulating wave of the signal generator's f-m signal is applied to

the horizontal deflection plates. This means that during the positive increase of the modulating sine wave the f-m signal is also increasing in frequency and during the modulating wave's decreasing amplitude the f-m signal is decreasing in frequency. If line *OB* represents the range of increasing frequency going from *O* to *B*, line *OA* represents the increasing amplitude of the sine wave input going from *O* to *A*. Therefore, with both deflection plates of the oscilloscope receiving their proper signals, the following happens:

While the sine wave is increasing in amplitude from *O* to *A*, the f-m signal is increasing in frequency from *O* to *B* and, since the sine wave input is synchronized to that of the modulating signal, the high-frequency end of an S-shaped curve will appear on the screen being traversed from point *O* to *E*. These three synchronized movements are indicated by the solid line arrows in directions *OA*, *OB*, and *OE* respectively. After the sine wave has reached its positive peak (point *A*), it starts to decrease in amplitude toward its negative peak, point *C*. Likewise the frequency of the f-m signal decreases where its lowest frequency corresponds to point *D* in Fig. 8-6. Each decrease is represented by dashed-line arrows pointing in the direction of decrease. At the start of the decrease the S-shaped curve is formed only between points *E* to *O*. Thus, during the complete decrease the S-shaped curve is traced out from points *E* to *F* in the manner previously described. This means that we have retraced curve *EO* and have traced out section *OF*. This S-shaped tracing is illustrated by the dashed arrows next to the curve.

While the sine wave is increasing again from its negative peak to the zero baseline, the frequency of the f-m signal is also increasing. Therefore, the sine wave curve traces out line *C* to *O*, and the signal across the detector traces out line *D* to *O*. These two movements once again trace out the S-shaped curve, and this time it goes from point *F* to *O* which has already been traced out.

Thus, during any one cycle of sine wave sweep the S-shaped curve is traced out *twice;* but due to the nature of the system one curve coincides with the other, and only one curve is seen on the screen. If the detector system is unbalanced or if the f-m signal generator produces a distorted output, the two S curves may actually appear on the screen as shown in Fig. 8-4 (B).

It might appear that line *EF* in Fig. 8-6 should be simply a straight line. However, the curves are introduced by the nonlinearity of the detector outside the band of frequencies for which it is designed to operate. That is, for ±75 or 100 kc, variations in deviations produce corresponding deviations in output. When the deviations exceed the limitation imposed by the operating design of the detector system, bends will appear in the curve. Consequently, the so-called S-shaped curve appears on the oscilloscope screen.

Signal Generator Employing Wobbulator

In the type of f-m visual alignment equipment to be discussed here, two S-shaped detector output curves are also traced out on the oscilloscope screen, but in a different manner. Besides the oscilloscope, a wobbulator and a signal generator are needed. A wobbulator was discussed in chapter 3. The signal generator can be a straight r-f generator of the proper frequency range or any modulated generator, wherein provision for shutting off the modulation is made. In either case some easy means should be available for connecting the varying capacitance output of the wobbulator across all or part of the generator's tank circuit. The frequency versus time characteristic of the oscillator due to the motor-driven capacitor is essentially a triangular-shaped curve for one revolution of the capacitor.[1]

A definite relationship between the frequency of the oscilloscope saw-tooth sweep and the modulation frequency due to the wobbulator is necessary. This is illustrated in Fig. 8-7, where part (A) represents

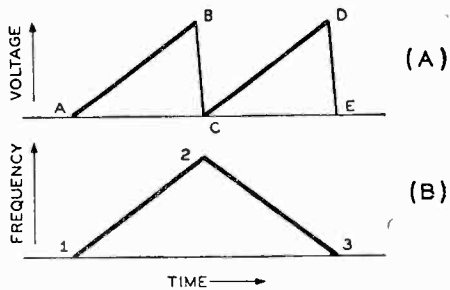

Fig. 8-7. When a wobbulator is used with a signal generator for visual alignment in obtaining a double S curve, as in Fig. 8-8, the frequency of the oscilloscope saw-tooth sweep (A) must be twice that of the modulated signal (B).

two cycles of the oscilloscope saw-tooth sweep, and part (B) one cycle of modulated signal. In other words the modulation frequency is to be equal to ½ the oscilloscope sweep frequency. This is essential for a double S-shaped discriminator characteristic, such as curves *JK* and *LM* in Fig. 8-8, to appear. The complete hookup for this system is to connect the modulating output of the wobbulator across the signal generator's oscillator tank circuit, as mentioned previously. The detector output of the receiver is placed across the vertical terminals of the oscilloscope. The output of the sync pulse generator of the wobbulator (working on the same shaft as the motor-driven capacitor) is placed across the sync terminals of the oscilloscope. The sync selector switch of the oscilloscope is turned to the external sync position. The output of the signal generator is now frequency modulated. So far as the detector circuit is concerned, this output should be equal to the i.f. of the receiver and preferably placed at the grid input to

[1]For a more comprehensive analysis of wobbulators in conjunction with oscilloscopic patterns see "The Cathode-Ray Tube at Work" by John F. Rider, John F. Rider Publisher, Inc., pages 235-57.

the last i-f amplifier or limiter, whichever is the last tube before the detector in question. If not enough signal is obtained by this hookup, then, under the assumption the i.f.'s are aligned correctly, place the generator at the signal grid of the mixer or converter tube of the set.

With all these initial hookups made, the sweep frequency controls of the oscilloscope are adjusted until two S-shaped curves, as shown in Fig. 8-8, appear. When this happens the frequency of the saw-tooth sweep of the oscilloscope is equal to twice the frequency of the modulating signal from the wobbulator. With reference to Figs. 8-7 and 8-8, the double S pattern is traced out as follows:

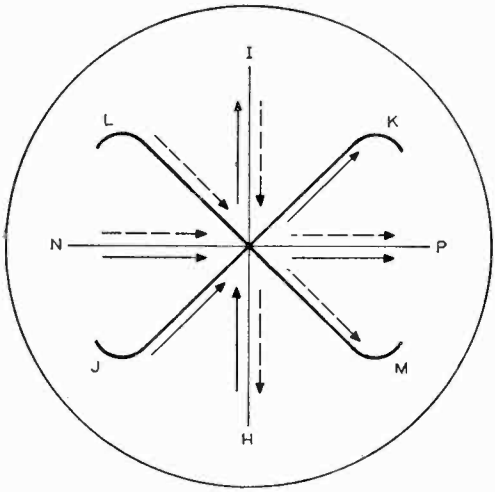

Fig. 8-8. As the frequency of the saw-tooth voltage of the oscilloscope is twice that of the wobbulator output, two S curves are traced on the screen. The output of the sync pulse generator of the wobbulator is placed across the oscilloscope sync terminals and the oscilloscope sync switch placed in the external sync position.

When the saw-tooth signal part (A) of Fig. 8-7 is sweeping from *A* to *B*, it traces out path *N* to *P* on the oscilloscope screen, as seen by the solid arrows in Fig. 8-8. At exactly the same time the modulating signal, and hence the f-m wave, essentially changes in frequency from 1 to 2 in Fig. 8-7 (B). This means that the detector output applied across the vertical terminals of the oscilloscope traces the path *H* to *I* followed by the solid arrows in Fig. 8-8. As a result of these simultaneous traces of *N* to *P* and *H* to *I*, one S-shaped curve is traced out, namely *JK* in the direction of the solid line arrows.

The retrace time, *B* to *C*, of the saw-tooth wave in Fig. 8-7 (A) is so very rapid that the saw-tooth sweep voltage of the oscilloscope essentially snaps back from point *P* to *N*, Fig. 8-8, before the frequency of the modulated signal starts to decrease from point 2 of Fig. 8-7 (B). Consequently, when the saw-tooth wave starts to increase in amplitude from points *C* to *D*, the modulated signal decreases in frequency from points 2 to 3. Thus, on the oscilloscope the saw-tooth once more is tracing out path *N* to *P*, but the output from the

detector is tracing out its return path from *I* to *H*. These traces are shown by the dashed arrows in Fig. 8-8. This latter movement traces out the other S curve from points *L* to *M* in the direction of the dashed arrows. The retrace time ending the second cycle of saw-tooth sweep is so rapid as to have negligible effect on the double S pattern.

When f-m receivers first appeared on the market, the system using the wobbulator was very popular because of the lack of service type electronic f-m signal generators. Today it is obsolescent mainly because of the many f-m signal generators now available. In addition, the high-frequency nature of f.m. and the fact that it does not lend itself to an easy means of varying the deviation have made it impractical. The following alignments employ sine wave modulation.

Visual Alignment of the Discriminator Detector

In visually aligning this stage, the vertical input terminals of the scope, sometimes called the *Y* axis terminals, are connected across the discriminator load between *A* and *B* in Fig. 8-1. The high side of these terminals is connected to point *A* and the ground side to point *B*. The output of the f-m signal generator is placed at the input to the limiter tube and the ground side of the generator attached to the receiver circuit ground. The generator is set at the i.f. of the receiver and frequency modulated. If a variable audio modulating signal is available within the signal generator, any modulating frequency can be chosen; 400 cycles is the usual frequency. Since the so-called linear range of

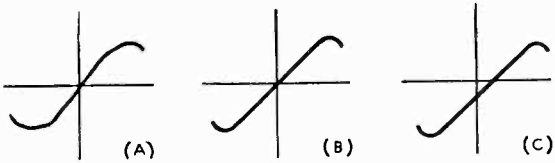

Fig. 8-9. Sketches of S-curve oscillograms: (A) discriminator primary not aligned; (B) primary and secondary aligned correctly: (C) secondary not aligned.

response of the discriminator should be at least 150 kc peak to peak, the deviation of the f-m signal generator should be set to at least 200 kc peak to peak. If the signal generator can go above this deviation value, as most modern f-m generators can, it would be advisable to use a deviation of about 300 to 400 kc, so that the complete output curve can be visualized. The sine wave modulating signal from the generator should then be attached across the horizontal deflection terminals of the oscilloscope, sometimes called the *X* axis terminals, for the purpose of the sweep signal. In this case the sweep of the oscilloscope should be turned off.

With these preliminary settings made, some form of S curve should appear on the scope. Adjust the primary of the discriminator transformer first to obtain the best possible linearity in the S curve. Next adjust the secondary of the discriminator transformer to center the

mid-point of the curve. The three pictures of Fig. 8-9 serve to illustrate the discriminator alignment. Part (B) of this figure shows the correct pattern; part (A) shows that the primary has to be aligned, and part (C) shows that the secondary has to be aligned. Of course when the setup is such that two S curves which are mirror images of each other appear, each should indicate the same kind of defects. Upon proper alignment both S curves should be linear and the crossover point should be in the center of each curve.

Visual Alignment of Limiter and I-F Stages

For this alignment, the vertical terminals of the oscilloscope are placed across the proper limiter grid resistor. The signal generator is then attached to the grid of the preceding limiter tube, if transformer coupled limiters are used, or to the grid of the last i-f amplifier. The controls of the generator should remain at the same frequency setting, namely the i.f., but the deviation control should be increased to encompass the complete i-f response curve. If a peak-to-peak deviation of 600 kc is available, it should be used; if not, the highest deviation available should be used. With these preliminaries completed, the last i-f transformer is aligned, starting with the secondary. If the transformer coupling is under critical, then only one peak will be the result of its response curve. Therefore, this i-f transformer should be adjusted for maximum peak of the curve as seen on the oscilloscope where the middle of the peak should be at the center of the over-all curve. The desired pattern is shown in Fig. 8-10. If the stage is overcoupled, the alignment should be made so that the two outside peaks of the curve fall symmetrically on either side of the center frequency dip. The correct pattern is shown in Fig. 8-11 where *AB* is equal to *BC*.

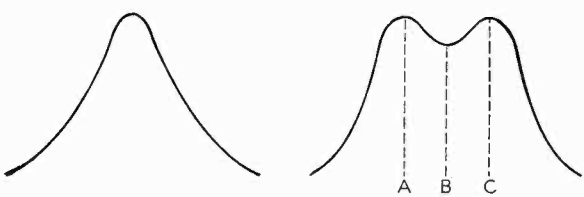

Figs. 8-10, left, 8-11. If transformer coupling is under critical, a single-peak response curve results, as in Fig. 8-10; but if the stage is overcoupled, a double-peaked curve results, as in Fig. 8-11.

The next step is to move only the signal generator with all the settings intact to the grid of the preceding i-f tube and align the next i-f transformer starting with the secondary. The picture that will be formed on the oscilloscope will be the over-all response curve of the last i-f transformer plus the one to be aligned now. If both i-f transformers are single peaked, this stage should be aligned so that the single peak pattern shown in Fig. 8-10 appears. Since one curve is

effectively added to the other, the gain of the generator and/or scope should be decreased in proportion. If the stage now to be aligned is overcoupled, then, no matter how the last i-f stage is coupled, the picture to look for would be a double-peaked curve that is symmetrical about its center frequency. The true curve may contain two double peaks that are not too sharply defined, so the alignment should be done carefully.

The immediately preceding i-f transformer and the others on back to the first i-f transformer in the set are aligned next in that order. In each case the signal generator is placed at the grid of the amplifier preceding the i-f transformer. In each alignment the picture on the oscilloscope will be a composite response curve of so many i.f.'s. In all cases, whether the i.f.'s are all double peaked, all single peaked, or a mixture of both, the picture should be a *symmetrical response curve,* either with double peaks that may not be too well defined or just a single-peaked curve.

In all these alignments the output of the signal generator should be as low as possible, so that the limiter is not driven into its saturation or limiting action point.

As yet there is no visual alignment method used in servicing, whereby each and every i-f stage is aligned separately so that each individual response curve can be seen on the oscilloscope. Such alignments are possible but the necessary equipment is not readily available to the serviceman.

R-F and Oscillator Visual Alignment in Limiter-Discriminator Receivers

To align these stages the oscilloscope remains across the limiter grid resistor, but the f-m generator is coupled to the antenna terminals of the receiver through the dummy antenna specified by the manufacturer. The deviation and modulating frequency settings remain as they are, and so does the sweep attachment to the horizontal plates of the oscilloscope, if any is made. Only the output frequency setting of the generator is changed. The oscillator and r-f alignment procedure discussed under the meter method of alignment is now applied here. In this case the adjustments are made for maximum and symmetrical i-f response curves on the oscilloscope.

Visual Alignment of Ratio Detector and I-F Stages

Since there is no limiter from which the i-f response can be taken off, the oscilloscope is usually placed as indicated by *M* in Fig. 8-2, or from the audio output lead to ground. The f-m signal generator is attached to the grid of the last i-f tube. A few variations in the visual alignment of the ratio detector are specified by different manufacturers. These methods will now be described.

Similarly to the meter method of alignment, the secondary trimmer of the ratio detector transformer is screwed all the way out. The primary of the transformer then is aligned for a maximum single and symmetrically peaked i-f curve as shown in Fig. 8-10. The signal generator is then moved back a stage and the next to the last i-f transformer is aligned. The procedure from this point onward follows the pattern of the i-f alignment of the discriminator detector exactly, including the remarks about double-peaked i.f.'s. After the i.f.'s are aligned, the discriminator secondary is adjusted to give the proper S-shaped curve. The output of the signal generator can be placed either at the grid of the last i-f tube or left at the r-f grid of the converter tube.

Another method is to place the oscilloscope in the same position as in the previous alignment and, also, to detune the secondary of the detector transformer. The output of the signal generator is placed at the grid of the last i-f amplifier with the same settings as in all the detector visual alignments. The primary is then tuned for the proper symmetrical single-peaked curve of Fig. 8-10. Then the secondary of the detector transformer is aligned to give a symmetrical S-shaped curve. The ratio detector is now completely aligned. The alignment of the i.f.'s is based in this case not on the picture of the i-f response curves, but rather on the detector output. The signal generator is gradually moved back as in the other i-f alignments and the proper i.f.'s adjusted. The adjustment in each case is for a continued symmetrical and linear S-shaped response curve of maximum amplitude.

A third method involves opening up the hot lead of capacitor C_1 in Fig. 8-2, so that the circuit functions as an a-m demodulator. The vertical terminals of the oscilloscope are then placed across load resistor R_1 in Fig. 8-2. Some manufacturers specify removal of the first audio tube. If the i.f.'s are all single peaked, the alignment should follow the previous i-f alignment where the i-f transformers are adjusted for a symmetrical single-peaked resonance curve. This includes the detector transformer, too. Care should be taken in tuning overcoupled i.f.'s for the double-peaked curve; in some instances it may be advisable to detune the secondary of overcoupled i.f.'s, tune the primary for a single-peaked curve, and then tune the secondary for the symmetrical double-peaked curve. Remember that when aligning the first i-f stage, the final response curve which may take into account overcoupled i.f.'s may not contain any evidence of double peaks due to the effective combination of all the i-f response curves. The over-all i-f curve may contain only a single peak, but it will be a broad response curve.

After this alignment with the signal generator as is, the capacitor C_1 of Fig. 8-2 is again attached to the plate of the diode. The vertical terminals of the scope are then placed as indicated by M in Fig. 8-2,

or across the output to ground. With these connections made, the oscilloscope should show a symmetrical and linear S-shaped curve, because the detector tube is once again functioning as an f-m demodulator.

Oscillator and R-F Alignment of Ratio Detector Receivers

Many manufacturers use a meter method of alignment for these stages, even though the rest of the receiver is aligned visually. Thus, we have the meter and visual method combined. Since an f-m signal generator is used, the meter method usually involves placing an output meter across the speaker voice coil. The same adjustments are made as for the r-f and oscillator alignment of the discriminator detector, but in this case the alignment is made for maximum meter reading.

Visually aligning the oscillator and r-f stages is very simple. The adjustments and preliminary settings at the front end of the set remain the same, but the positioning of the oscilloscope may vary. For example, where the time constant capacitor C_1 is opened, the oscillator and r-f stages can be aligned for maximum and symmetrical i-f patterns on the oscilloscope, and then the capacitor circuit closed again. Afterward the detector circuit could be checked. Another method would be to keep the oscilloscope in the *M* position as shown in Fig. 8-2 or across the audio output and adjust the oscillator and r-f circuits while the secondary of the ratio detector transformer is detuned. The adjustments are for the proper i-f response curves. Afterward the detector can be aligned.

Still another method would be to connect the oscilloscope as shown by *M* in Fig. 8-2 and adjust the oscillator and r-f stages after all the other alignments have been made. The adjustment would be for a maximum continued and symmetrical S-shaped response curve from the detector.

Visual Alignment of the Locked-In Oscillator Detector Receiver

The visual alignment of the locked-in oscillator detector receiver is much simpler than the meter method of alignment. Similar to the meter method of alignment, the i.f.'s are aligned first, the detector next, and the oscillator and r-f stages last.

This visual method as carried out on the Philco model 48-482 in the John F. Rider Laboratories is as follows: The high side of the vertical terminal of the oscilloscope is connected between the plate load resistor (R_2 in Fig. 8-3) and the quadrature network of the locked-in oscillator detector. The vertical ground terminal of the oscilloscope is connected to the chassis of the receiver. It is across resistor R_2 that the audio frequency variations appear. For the i-f alignment the

oscillator grid, pin 2, of the FM 1000 detector tube is grounded, making the oscillator section inoperative. The output of the f-m signal generator is set at the i.f. of 9.1 mc with a wide deviation and then placed on the grid of the last i-f tube, and the last i-f transformer is aligned for a single-peaked maximum and symmetrical response on the oscilloscope screen. The rest of the i.f.'s are similarly aligned with the signal generator being moved back and placed at the grid of the preceding i-f amplifier. The oscilloscope remains where it is across resistor R_2.

After the i.f.'s are aligned, the ground is removed from the oscillator grid. A short is placed across the quadrature network, and the signal generator connection remains as in the last step. The output of the signal generator is set at 9.1 mc, unmodulated. The oscilloscope remains where it is. The oscillator trimmer C_2 in Fig. 8-3 is then adjusted for a zero beat, as indicated by a minimum signal on the oscilloscope and in the loudspeaker.

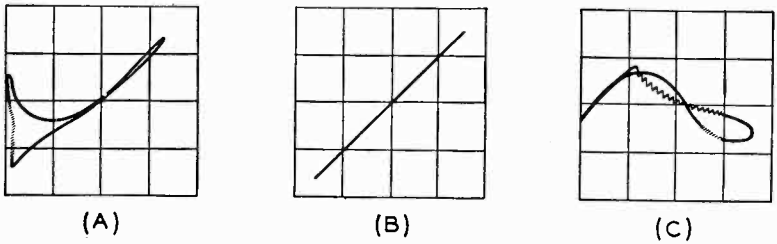

Fig. 8-12. Oscilloscope patterns of response curves obtained in the visual alignment of a locked-in oscillator detector: (A) when the quadrature circuit is misaligned; (B) correctly aligned; (C) when the quadrature circuit and the last i-f transformer secondary are both misaligned.

After the oscillator alignment, the short across the quadrature circuit is removed for alignment of this section, but the signal generator and oscilloscope remain where they are. The signal generator is frequency modulated at a center frequency of 9.1 mc, with a peak deviation of 100 kc. The quadrature coil L_3 (see Fig. 8-3) is then adjusted for linear detector response on the oscilloscope screen (Fig. 8-12B). A typical response curve when the quadrature circuit is misaligned is illustrated in Fig. 8-12 (A) under 100-kc peak deviation. The misaligned response curve shown at Fig. 8-12 (C) is taken at the detector output when the quadrature network and the secondary of the last i-f transformer are both misaligned. This latter misalignment is also under the condition of 100-kc peak deviation.

The alignment of the locked-in oscillator detector by the foregoing method gives good results, because the detector output is quite linear over more than the minimum required deviation range. This is shown by the detector curve of Fig. 8-12 (B).

To align the front, high-frequency oscillator and r-f section visually, the f-m signal generator is connected to the antenna input terminals, and the oscilloscope remains where it is. The signal generator and receiver dial are first set at the same frequency on the high end of the band for the capacitor trimmer adjustments, and then at the low end for the coil adjustments. The signal of the generator is frequency modulated at the desired receiver dial setting and with a wide enough deviation to give a good picture of the over-all bandpass characteristic. The oscillator and r-f stages can then be aligned in the proper order for maximum linear detector response on the oscilloscope.

An alternate method to observing the linear response of the detector would be to align these stages for a maximum and symmetrical response of the i-f stages. To do this the grid of the oscillator section of the FM 1000 tube has to be grounded.

Phase Control in Visual Alignment

There may be some difference in phase between the modulating signal of the f-m signal generator and that applied to the horizontal deflection plates of the oscilloscope, in which case two traces [for example see Fig. 8-4 (B)] of the pattern may be seen where only one is desired. Some f-m signal generators are equipped with an internal phase shifting network capable of making one picture out of the double trace. It is also possible, when sine wave modulation is employed, for a simple RC network to be used at the input to the horizontal axis of the oscillator for the purpose of phase shifting. Fig. 8-13 illustrates how the connections should be made. In this diagram,

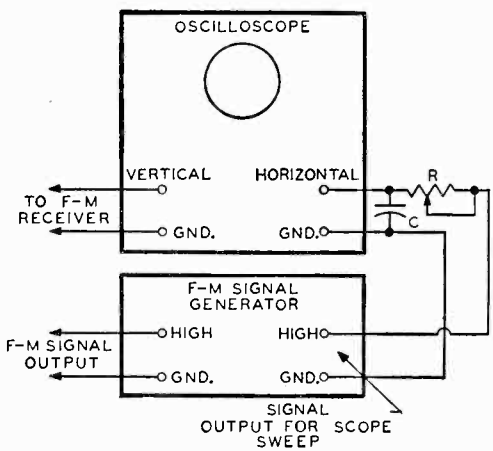

Fig. 8-13. To obtain phase shift at the input to the horizontal plates of an oscilloscope, an RC circuit can be inserted as shown. The resistance R may be 1 megohm and C equal to 0.001 μf or R may equal 0.5 megohm and C equal 0.0025 μf.

the capacitor C is connected across the horizontal terminals of the oscilloscope, and the resistor is connected in series with the hot lead

to the horizontal terminals. To be able to vary the phase shift, the resistor is made variable. The ground lead of the horizontal terminals of the oscilloscope is connected to the ground lead of the sweep output signal terminal of the f-m signal generator. The hot lead of the horizontal terminals of the oscilloscope is connected to the high side of the signal generator through *R* as shown in Fig. 8-13.

The exact values of R and C are not always the same, for due to the amount of phase shift required, they may vary. Sometimes a potentiometer of about 1 megohm is chosen for R and a 0.001 μf capacitor for C. At other times R may be 0.5 megohm and C about 0.0025 μf. If one set of values does not give the proper phase shift, another should be tried although the foregoing two sets of values usually give good results. If this connection does not produce the correct direction of phase shift, the R and C should be interchanged.

The Use of Marker Frequencies

It is often valuable, when employing visual alignment, to be able to identify the frequency deviation limits on a particular S pattern or the location of other frequency points on the oscilloscope pattern being observed. Employing an unmodulated external signal makes this possible. This signal, after proper frequency adjustment, will show up the desired points on the oscilloscope pattern. This external signal is known as a *marker frequency,* and it follows that the points indicated by the marker frequency are called *marker points.* It is important that neither oscillator affect the output frequency of the other.

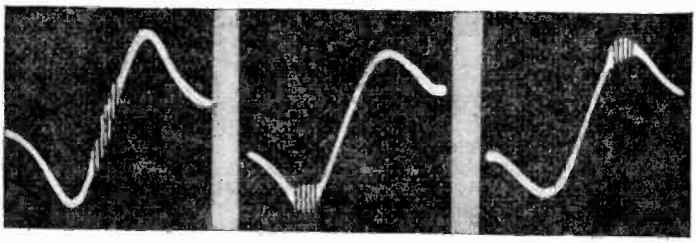

Figs. 8-14, 8-15, 8-16, left to right. The marker frequency is indicated by the break in the detector S curve at its center in Fig. 8-14 and at either the lower or upper frequency limits of the linear portion of the curves in Figs. 8-15 and 8-16.

Two methods are available by which these marker points can be produced. One method is to use an f-m signal generator that produces its marker frequencies within the unit. Usually only two fundamental marker frequencies are produced by the generator, but their harmonics are strong enough so that they also can be used as marker frequencies. Such a system has two main disadvantages. One is that it

is not possible to produce a frequency that occurs between the harmonics of the marker frequencies produced by the generator. The other is that, even though one marker point is desired, a number of marker frequencies may appear on the oscilloscope pattern under test because of the spacing of harmonics of the marker frequency generator.

The marker frequency may produce either a wiggle or a small break in the pattern being observed. The marker which shows up depends upon the signal generator used. When the marker frequency is produced by the f-m signal generator, then the frequency is injected together with the f-m signal into the part of the circuit under test.

The other method of obtaining a marker frequency is to use a separate signal generator with an unmodulated output. This separate generator or oscillator should be capable of producing the f-m band of frequencies and also the i.f. of f-m receivers as fundamentals. When such an external generator is used, the marker frequencies may be inserted at a number of different points. One convenient method is to place the output of this external generator in parallel with the output of the f-m signal generator, provided there is no interaction.

Marker frequencies can establish the frequency range over which the output of the f-m detector is linear, or spot frequency locations upon typical resonance curves. These applications are illustrated in Figs. 8-14 to 8-18, which are retouched photographs of oscilloscope patterns taken while marker frequencies were being used to establish certain points. An auxiliary generator was used for these pictures. In Fig. 8-14, the marker frequency is shown at the center point in the S f-m detector characteristic. In Figs. 8-15 and 8-16, the marker frequency establishes either the lower or the upper frequency limits of the linear portion of the f-m detector curves. With a known i.f. and a known marker frequency, it is easy to determine which is the upper limit and which the lower by examining the picture on the oscilloscope. The markers will fall either above or below the center i.f., thus indicating which is the upper limit and which the lower. In Fig. 8-17, the marker frequency identifies the peak of the response curve, and

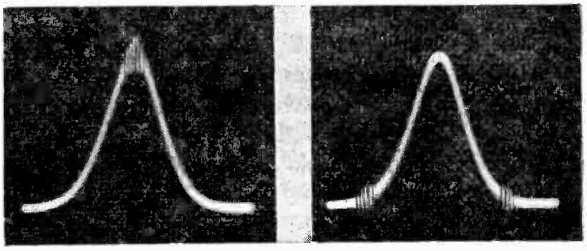

Figs. 8-17, left, 8-18. In Fig. 8-17 the marker frequency identifies the peak of the response curve of an i-f transformer and the other curve shows the marker frequencies identifying the upper and lower limits.

in Fig. 8-18, the marker frequencies identify the two limits of the response curve.

The accuracy of such marker indications depends on the accuracy of the calibration of the auxiliary generator or the marker frequency of the f-m signal generator, whichever is being used. The advantage of the auxiliary generator is that it can be made variable over quite a large frequency range. However, its frequency range should be sufficiently extensive to provide fundamental frequencies rather than harmonics. As mentioned, harmonics can be used, but much confusion can be avoided and more rapid operation secured by operating on the fundamentals. One precaution which must be exercised is control of the output level of the marker-frequency signal. Excessive output will interfere with the response curve or detector characteristic developed upon the oscilloscope screen. Just enough signal is required to see the wiggle representing a beat, upon the oscillograph image. The point upon the pattern where the wiggle appears corresponds in frequency to the setting of the auxiliary generator, assuming that operation is upon the fundamental.

VISUAL AND METER METHOD COMBINED

Visual alignment of f-m receivers is especially beneficial in the detector and i-f stages since it is the response of these individual networks which can be seen. For the r-f and oscillator sections of the receiver, some manufacturers continue with the visual alignment, but others suggest using the meter method after the i.f.'s and detector have been visually aligned. This entails a method of alignment which uses both the visual and meter methods. Such types of alignment are not uncommon, but a true method of combining these two alignment procedures would be to use both meters and the oscilloscope for all the stages in conjunction with an f-m signal generator. This method requires the use of a number of instruments which may make the procedure a little expensive and tedious for the average serviceman. But this type alignment is definitely helpful in a factory setup where accuracy is important.

In the factory alignment of the Edwards Fidelotuner (See Fig. 7-41) two oscilloscopes and two meters are used to align the detector and i-f stages. This unit employs the limiter-discriminator method of detection. Across the back of the chassis of this f-m tuner is a 6-point terminal strip which aids in quick alignment of the set, as well as providing connections to an outside audio amplification unit. The terminal designations are indicated in the schematic of Fig. 7-41. For alignment, the meters and oscilloscopes have a fixed attachment which is clipped to the terminal strip of the chassis, thereby saving time.

One oscilloscope (vertical terminal connection) and a zero center type meter are connected across the discriminator load by having the