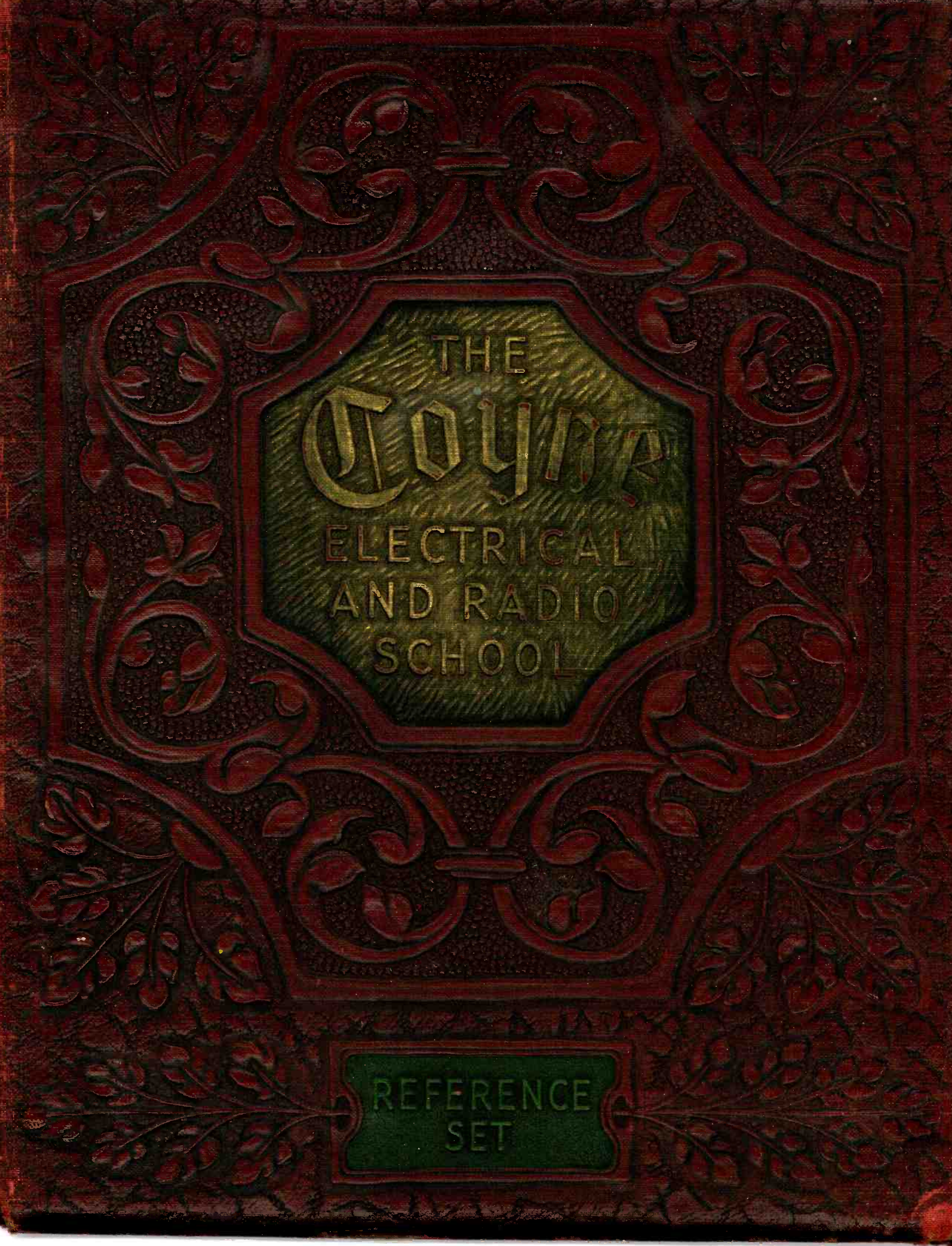

THE
Coyne
ELECTRICAL AND RADIO SCHOOL

REFERENCE SET

Property of R G Shockey = 37820

COYNE
Electrical and Radio School

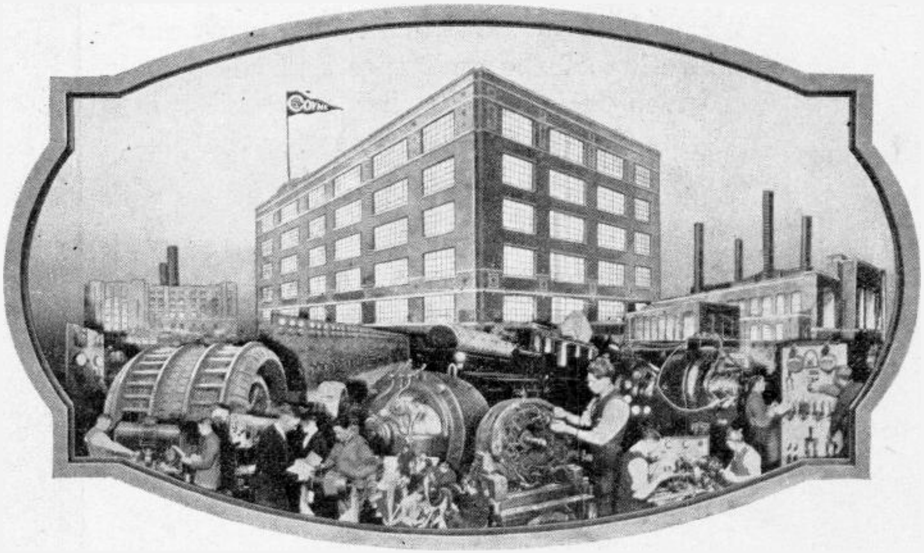

REFERENCE SET

Practical Electricity Simplified
for easier understanding
and permanent reference
for
Coyne Students and Graduates

REVISED EDITION

500 SOUTH PAULINA STREET
CHICAGO, ILL.

Printed in U.S.A.

Acknowledgments

We wish to acknowledge and express our appreciation of the assistance and co-operation given by the following companies, in supplying data and illustrations for the preparation of this reference set.

General Electric Co.
Westinghouse Electric & Mfg. Co.
Allis Chalmers Mfg. Co.
American Brown Boveri Co.
Cutler Hammer, Inc.
Central Scientific Co.
Welsh Scientific Co.
Manhattan Electric Supply Co.
Graybar Electric Co.
Illinois Electric Co.
Power Plant Engineering Journal.
Walter Bates Steel Corp.
Delta Star Mfg. Co.
Philadelphia Electric Co.
Edison Storage Battery Co.
Philadelphia Battery Co.
Electric Storage Battery Co.
Ohio Brass Co.
Hoskins Mfg. Co.
Allen Bradley Co.

CONTENTS

Under Score indicates the KEY words under which the related subjects will be found in the INDEX starting on page 5.

PART A—ELEMENTARY ELECTRICITY

PART B—ELECTRIC SIGNAL SYSTEMS AND CIRCUITS

PART C—ELECTRICAL CONSTRUCTION AND WIRING FOR LIGHT AND POWER

PART D—ILLUMINATION, LAMPS, FIXTURES, LAYOUT

PART E—REFRIGERATION, PRINCIPLES, MACHINES, SYSTEMS, SERVICING

PART F—ARMATURE AND STATOR WINDING, TESTING AND REPAIRING

PART G—DIRECT CURRENT POWER MACHINERY PRINCIPLES OPERATION AND MAINTENANCE

PART H—ATERNATING CURRENT AND A.C. POWER MACHINERY

PART I—AUTOMOTIVE ELECTRICITY, IGNITION, STARTING, AND LIGHTING

PART J—ELECTRIC STORAGE BATTERIES, OPERATION, CARE AND REPAIR

PART K—RADIO, PRINCIPLES, VACUUM TUBES, RECEIVERS, OPERATION, TESTING AND REPAIR

How to Use This Reference Set

This reference set will be of use and value to you in exact proportion to the time and energy you spend in studying and making use of it.

It is best when possible to study a little each day, and preferably on the subjects covered that same day in your department lectures and shop work. Also if possible read ahead on the work to be covered the following day in the shops.

Do not rush through any part in order to cover a large amount at one time. Instead, read it slowly and try to gain a thorough understanding of it as you read and think it out.

Remember definite thinking and studying, or mental effort, will develop your mind the same as physical exercise develops your muscles.

The more one studies and thinks along the lines of his chosen work, the faster and easier he can study, and also think of the right things to do when out on the job.

We have prepared a great number of diagrams and illustrations to help you get a better understanding of certain devices and principles. These have been numbered and arranged as conveniently as possible, so they will be easy to refer to as you study the sections describing them.

Refer to them freely and study them well, as they are a great help to fix a permanent picture or impression of certain important things in your memory.

Each of the most important branches of the work, has been covered in separate sections and given proper titles to indicate what they contain. And all of the subjects within these sections are given sub-headings and article number in the **larger type.** Certain important words, terms, and rules are also set out in large type.

Pay close attention to each sub-heading, as it will help you center your mind and attention on what is to be learned in those paragraphs. And while it is not necessary to memorize each term or law printed in the large type, it is well to read them over several times to be sure you thoroughly understand them.

The arrangement in sections and the sub-headings above mentioned, and the carefully prepared alphabetical index will also make it easy to find what you want to look up when using the set for future reference, to help you with problems from your daily work on the job.

Here again, I want to remind you, that the set can be of great value to you if you use it as you should. After graduation, never lay this set on a shelf and forget it, even for one week. From the day you start your first electrical job, and just as long as you still want to advance to a higher position and salary, plan definitely to refer to it daily or several times a week, to brush up on everything possible in connection with your work.

This is the proper way to use a reference set, to obtain its greatest value. It is also the way many of the best engineers and electrical men in big positions today have reached their goal, many of them without much previous schooling.

Any average student who does his shop work and course thoroughly, and makes good use of his notes and this reference set, can feel certain of his ability to handle any kind of ordinary electrical work, and rapidly advance to the top, if he continues to use and apply the knowledge he can obtain from all three.

E. L. RICHARDS,
Shop Superintendent.

COYNE
Electrical and Radio School
CHICAGO ~~ ILLINOIS
ESTABLISHED 1899

ELEMENTARY ELECTRICITY

Sections One, Two, Three, Four and Five

Purpose of This Reference Set

This material has been prepared with great care by the school, to provide for our students and graduates a reference set that will be practical, brief, and simple to study along with the shop course, and convenient and dependable to refer to for help and data on their work in the field.

It is prepared by the school Instructors, executive teaching staff, and Superintendent, all practical men with wide experience in their various subjects and work, and who thoroughly know the students' problems, and needs while in the course, and their needs out on the job afterwards. In this, we have also been assisted by noted electrical engineers of some of the greatest electrical concerns in the country.

The material is simply worded, non-technical, and well illustrated with diagrams and photographs. Every ambitious student will find it extremely interesting and valuable, and easy to study.

The student should understand that this set is not a necessary or compulsory part of the regular course, and is not needed to complete the course. The regular course of shop work and lectures is entirely complete without it. And while it does not cover exactly or in detail the same material as the lectures, it does cover the same general subjects arranged in about the same order as the shop course. And any student who will spend a few minutes per day in study of the sections pertaining to the work he is covering in the shop course, will find it a great help in clearing up various points, by presenting them from different angles.

By this study during the course, he will become familiar with the location of the various subjects and sections which will make it very easy to use for reference on problems that arise in his work in the field after graduation.

Another good reason to study this set along with the course, is that your instructors in the shop departments will then be able and glad to assist you with any points in it that are not clear, and help you compare it with your daily work in the shops.

A great amount of time and money have been spent to make this reference set complete and practical, and we hope it will prove of great value to every student while here, and later in the field.

H. C. LEWIS,
President.

THE ELECTRICAL FIELD

USES AND APPLICATIONS OF ELECTRICITY, AND GREAT OPPORTUNITIES FOR TRAINED MEN

The electrical industry is one of the greatest in the world today. It is a comparatively young industry, and it was only about 50 years ago that we commenced to use electricity to any great extent. Yet today there are many billions of dollars worth of electrical machinery and equipment in use in this country alone, and new electrical equipment is being manufactured at a rate of hundreds of millions of dollars worth per year.

In practically every country in the world, electricity is coming into greater use, at a rate so tremendously fast, that it is impossible to predict the extent and size of this great industry for even a few years ahead.

Every student of electricity should be vitally interested in the great size of this industry, and the various thousands of uses to which electricity is being put today. It gives him certain assurance that he has plenty of opportunities to "cash in" on every bit of training he can obtain.

There are so many different branches of electrical work today, that the trained man can choose almost any kind he desires.

INDUSTRIAL POWER AND LIGHT

Industrial plants and factories all over the country use electric power by the millions of horse power, and are over three-fourths electrified at fraction of one horse-power to many thousands of present. Electric motors, ranging from a small horse-power each, turn the wheels of these great factories and mills.

Almost every new plant that is built is completely equipped with electric power machinery because it is so much cleaner, quieter, safer, and more efficient than any other power.

Electric lights by the millions brighten the modern factory to speed up the work, and make safer and better conditions for employees.

Electric furnaces melt our finest steels and metals. Electric arc welders, spot welders and butt welders replace riveting, bolting and casting in the faster and better construction of our manufactured metal products today. Electric enameling ovens and heat treating furnaces are also coming more and more into use, by the thousands of kilowatts each year.

Many thousands of men are required to install, operate and maintain this power, lighting, and heating equipment in these shops and factories.

TRANSPORTATION

In transportation we find electricity used on a vast scale. Electric street cars, elevated and subway trains in our cities, and electric interurban lines between towns are common. And the great railway lines are electrifying more every year. Powerful, silent, electric locomotives and motors, pull many trains over hundreds of miles of the most difficult mountain railways, as well as the level runs.

Then there are the electric block signals on every principal railway in the country, and the automatic electric train control equipment now being installed on many lines, to say nothing of the train lighting, air conditioning and many other uses. Even on the seas, we have great battle ships using as much as 180,000 horse-power of electric energy each, just to drive their propellers. Merchant marine ships also use hundreds of thousands of horse-power of electrical machinery.

COMMUNICATION

Electricity operates our many millions of telephones, making it possible to talk to our friends, or conduct our business over a few miles, or across the ocean, as we please. These and our vast telegraph systems require thousands more of electrical men in pleasant, fascinating work, to install and maintain them.

Then we have the radio industry, just another branch of electricity, and while it is only a few years old, we have millions and millions of radio sets bringing education and entertainment to our homes throughout the country today.

And now the new fields of auto radio, public address, sound and television.

The demand for trained electrical service men in these branches is enormous.

Many streets in the larger cities are electrically lighted at night, almost as bright as day light. Special electric lighting beautifies the outside of the great skyscraper buildings. Electric signs with thousands of lamps in each of the larger ones, flash their advertisements in all colors.

ENTERTAINMENT

Our marvelous motion pictures of today, with their great entertainment and educational value, are made possible by electricity. Great electric lamps of from 1,000 to 50,000 watts each, light the studios for the photography. Electric projector machines reproduce them in the theatres, and the beautiful stage and theatre lighting effects add their part electrically.

The talking movies are also electrical devices which are simple enough to those who have thorough practical training in electricity and radio.

AUTOMOTIVE AND AVIATION ELECTRICITY

Every one of our many millions of automobiles, trucks and tractors, use electricity. It ignites the gasoline, starts our cars, operates the lights, horn, radio and other conveniences on the modern motor cars. Electrical experts who can repair the trouble of these electrical systems and their electrical units, including the storage batteries, can draw good pay or run a very profitable business of their own.

Aviation is another great field, requiring many more trained electrical men each year, to take care of the ignition equipment of these great airplane engines. The landing and flying lights and electrical instruments on the plane, the radio beacon and communication equipment, air port lights and route beacon lights, all require trained electrical men in the finest kind of work.

HOME LIGHTING AND CONVENIENCE DEVICES

In our homes electricity gives us plenty of clean, convenient light, beautifying the home, and saving our eyes when we read and study, and actually giving us many more useful hours each day.

Then there are the electric fans, toasters, heaters, vacuum cleaners, washers and ironers, refrigerators, kitchen utensils, and dozens of other electrical convenience devices saving time and eliminating drudgery in the home.

These things are no longer limited to the city homes alone. Farm and rural electrification is one of the fastest growing branches of this industry. Hundreds of thousands of farms are electrified today, with their own private plants, or from lines of the power companies. The modern farmer is beginning to use electricity to save time and earn money for him, just as the business man or factory owner does in the cities.

So we see that electricity is rapidly becoming a great part of our entire life and civilization. And it is literally true as the late Dr. Steinmetz said, "that if we were to remove the electric wires from the world today, our civilization would look like a sieve."

Now, this brief review of some of the most important uses of electricity serves to show us what a great industry it is, and what a variety of different branches the trained man has to choose from.

GREAT OPPORTUNITIES FOR TRAINED MEN

The field and uses of electricity increase at such a rapid rate each year, that it requires approximately 60,000 additional men yearly, to install, operate and maintain all this equipment.

This is several times as many men as Coyne School and all of the leading colleges in the country can train in electricity each year. Thus you can readily see that for many years to come there is certain to be a great demand for practically trained men.

So if you have carefully read and thought over this brief description of the electrical industry, I am sure you can see that there is no field of greater opportunity for fascinating, steady work at good pay, and with real opportunities for advancement. Electricity offers all these to the ambitious man, who will study and train to become a qualified and efficient electrical worker.

The following material in this reference set, has been prepared in simple practical form, to make easy the things about electricity that remain so mysterious to the ordinary untrained man.

I believe every ambitious student who is not afraid to study and do his part, and who takes pleasure in adding to his practical knowledge of electricity, will enjoy his study of every page of this set.

And I can assure any student that when he has properly completed his shop course in all departments at Coyne, and the material of this set, he will have a splendid practical knowledge and training. And he can feel very confident of his ability to undertake and handle most any kind of electrical installation, operation, or maintenance work, and make a real success at electricity.

E. L. RICHARDS,
Shop Superintendent.

ELEMENTARY ELECTRICITY

SECTION ONE

ARTICLE 1.

The very important purpose of this section is to acquaint you with the general nature of electricity, how electrical energy may be produced in commercial form, and the fundamental laws and rules by which we control electricity and its various useful effects.

It is not necessary for the practical man to try to obtain an exact definition of electricity, or exactly what it is in terms of detailed scientific theory. But is well to understand that we consider electricity to be in and throughout everything. In fact all matter is considered to be made up of electricity, or electrons in continuous whirling motion. These electrons compose the very atoms of matter, which themselves are so small that we cannot see them even with the most powerful microscopes.

So we find that electricity is a natural force or element, present in all things, and we do not create or produce it, but instead we have merely learned how to generate electrical pressure to set the electricity in motion.

2. FORMS OF ENERGY

In this way we transform some of our various forms of energy into electrical activity or energy, and use this electricity to carry and give up or reproduce its energy wherever we want it in useful forms, such as light, heat or power.

For example in Figure 1, we have the latent energy of coal, which was stored in it ages ago by the sun, given up by burning or combustion. This burning of the coal produces heat energy. The heat boils the water and changes it into steam under pressure in the boiler, and from here we pipe it to an engine.

Under control of proper valves, the steam expands in the engine cylinder pushing the piston, turning the wheel and giving up its energy in the form of useful mechanical power.

Then we use this power by means of a belt, to drive a dynamo which generates electrical pressure and sets electricity in motion in commercial form. This electricity flows silently and incredibly swift through little wires to the lamp, where it is again changed into glowing incandescent heat or light.

So you see it is simply a cycle of transformation of one kind of energy to another. And electricity being so much cleaner, more convenient and efficient is why it is preferred to all other forms of heat, light or power. We can, of course, use water power, wind power, and gas or oil engines as well as steam, to drive our electric generators, and we will take these up later.

3. STATIC AND DYNAMIC ELECTRICITY

Now before we go further in this phase or part of our work, let us consider the two different forms or conditions of electricity we have to deal with.

These two kinds of electricity as they are often called, are **Static** and **Dynamic** electricity.

Static Electricity refers to electricity at rest, in the form of charges, or not flowing in the usual commercial form.

Dynamic Electricity is electricity in motion, or flowing through wires and devices in our usual commercial form. This is by far the most common in the work of the average electrical man, and will be the kind the greater part of this reference set deals with. But Static Electricity is quite often encountered in our work also, and every thoroughly trained man should have a general knowledge of its nature, how it is produced, and how to control it.

4. STATIC EXPERIMENTS

One of the simplest examples of static electricity, is the rubbing of amber with wool flannel, which causes it to become charged and attract small bits of paper, wood or pith.

This was discovered about 600 B. C. by a Greek. The Greek word for amber being Elektron, and the Latin word Electrum, the name Electricity was given to this charged effect.

It was about 22 centuries later, in 1600 A. D. that Dr. Gilbert, an English physicist, discovered that other materials such as glass, hard rubber, wax, etc., would become charged by rubbing with silk, wool or fur. These will also attract bits of paper, string, etc.

Try this by rubbing your comb or fountain pen briskly on your coat sleeve, and then bring it near to very small bits of thin dry paper.

5. POSITIVE AND NEGATIVE CHARGES

We can probably best understand how this occurs, if we refer briefly to the electron theory of matter again. All matter is supposed to be made up of atoms, consisting of a **Positive** nucleus or center, and negative electrons whirling around this positive nucleus.

In normal uncharged bodies of matter, these positive and negative forces are equal or balanced. And when we briskly rub two unlike bodies together, the theory is that some of the free electrons of the surface of one body are removed to the other. This creates an unbalanced condition, with one body having a shortage of negative electrons, and the other an excess. The body with the shortage of negative electrons, is said to be **Positively** charged, and the

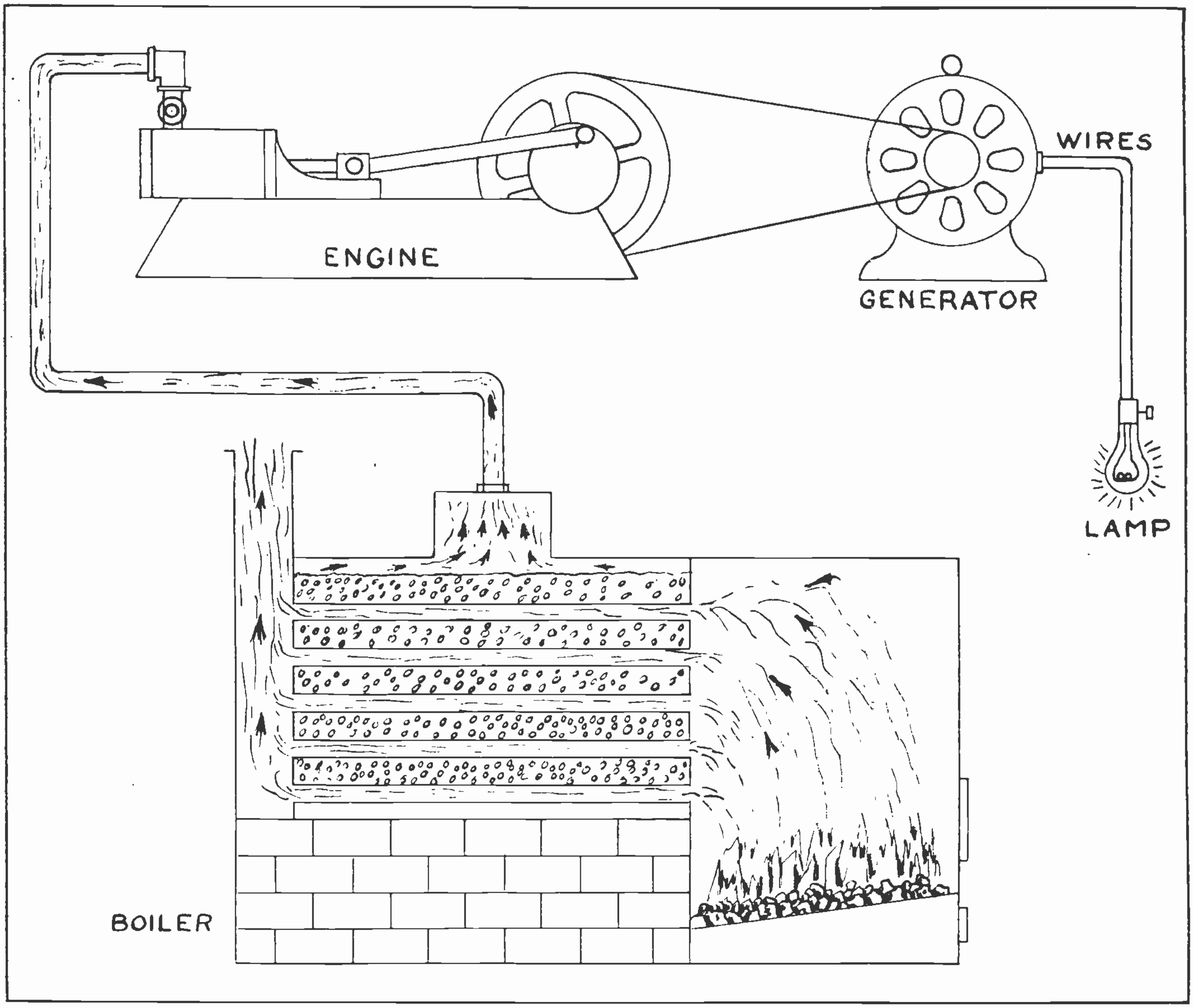

Fig. 1. Sketch showing how heat energy of coal is changed into mechanical energy by the engine, then to electrical energy by the generator, and into heat and light again by the lamp.

one with the excess of negative electrons is **Negatively** charged. So much for the theory by which static charges occur or are produced.

We now see that we can set up opposite conditions of charge on different bodies, and we call them **Positive** and **Negative.** When we set up such a condition, we say there is a difference of potential or electrical pressure between them, and this pressure tends to cause electricity to flow and balance them up again.

Now, if we take a piece of amber which has been negatively charged, and bring it into contact with two suspended pith balls, as in Figure 2A, the pith balls will both take on or absorb negative charges. Objects of this nature will often take on a charge from a short distance. This is called an **Induced** charge.

6. STATIC REPULSION AND ATTRACTION TION

Now, as soon as the two pith balls have been given like charges, we note that they immediately push apart or repel each other. And they will also repel each other if both are positively charged, as we can prove by giving them a positive charge from a glass rod which has been rubbed with silk. But if we charge one pith ball negatively from the amber, and one positively from the glass, they will at once draw together or attract each other. (See Fig. 2B.)

This proves one of our most important electrical laws, as follows: **Like Charges repel each other** and **Unlike Charges attract.**

This law of electricity should be memorized, as it is very important, and many electrical devices have their operating principles based on it.

7. STATIC MACHINE

A number of very interesting and valuable demonstrations of this law, and the nature and effects of static electricity, can be made with a static machine such as used in the elementary department of your shop course.

The static machine is shown in Figure 3. It is simply a device to produce strong charges of static

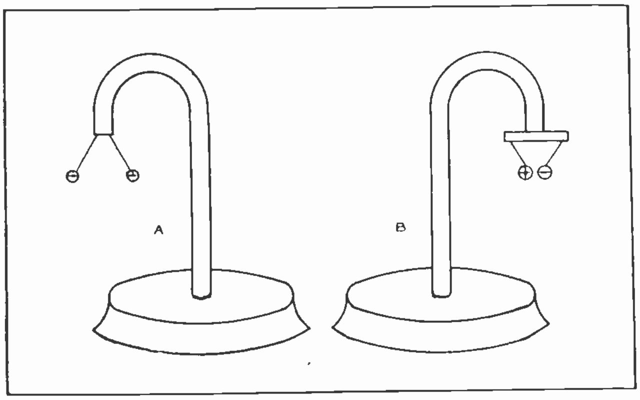

Fig. 2-A. Pith balls with like static charges repel each other.
Fig. 2-B. Two balls with unlike charges attract each other.

electricity, for various experiments and tests. With it we can produce charges many times stronger than by rubbing the amber, glass, or hard rubber rods.

As you will note in Figure 3, the static machine consists of one stationary glass disk, on the back of which are fastened some tinfoil strips. To these foil strips are attached little wire brushes, extended around to touch a row of metal buttons, which are placed around the edge of a rotating glass disk, which is revolved close to the stationary one.

These little metal buttons or carriers, convey the little charges collected, to the metal system of the machine. When the rotating disk is driven at high speed by means of a hand crank, belt and pulleys, a charge is gradually built up by what is called induction, as the metal buttons are whirled rapidly by the foil plates and little wire brushes. This gradually builds up a positive charge on one of the metal spheres or electrodes and a negative charge on the other.

It is possible to build up charges of such high pressure or voltage, that a discharge in the form of a spark will take place between the two electrodes. This discharge tends to equalize or again balance the positive and negative charges.

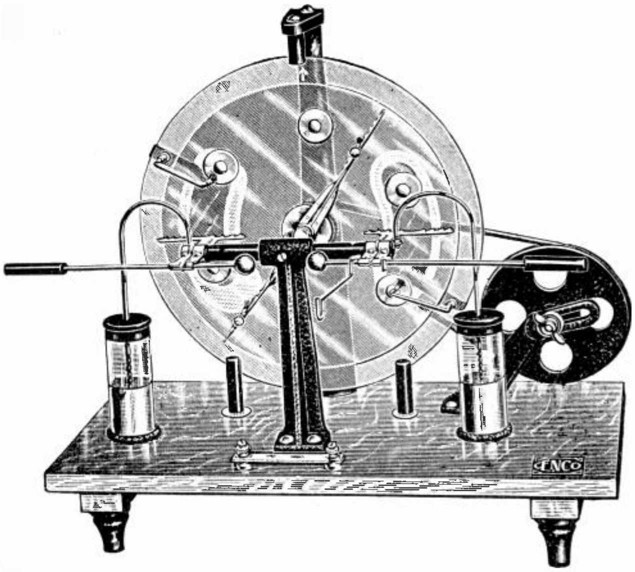

Fig. 3. Static machine, for producing strong charges of static electricity. When the disks are rotated rapidly a spark an inch or more in length can be produced.

Sometimes these machines can be made to produce sparks an inch or more in length, which represent charges of several thousand volts. But these charges are not dangerous, because they are of such small quantity, or actual amounts of electricity.

If we attach simple Leyden jar condensers to each of the electrodes of the static machine, we can get it to store up or accumulate in them, much larger amounts of electricity. Then when the discharge occurs it will be a very hot snappy spark, and will give quite a shock to anyone touching the terminals.

8. CONDENSERS

These condensers, which are used to store up electricity in the form of static charges, are made in many different shapes and sizes, but all on the same principle. The Leyden jar type consists of an inner and outer metal jar or cylinder of thin copper, brass, or foil, separated by a glass jar. (See Figure 4.)

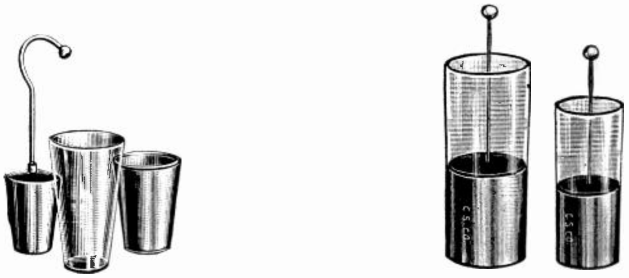

Fig. 4. Two types of Leyden jar condensers.

This provides two conducting surfaces of metal, separated by an **Insulator** or **Dieletric,** in the form of glass. (An insulator or dielectric is any material which prevents the flow of electricity. These will be explained later.)

When the terminals of a static machine or source of electric charge are connected to the two metal jars or elements, these will distribute a charge over the surface area of the glass which they cover. Then after the condenser has been so charged, we can discharge it by connecting a wire from one metal element to the other.

Condensers are often made with flat plates of foil or metal, stacked and separated by flat plates of glass, rubber or mica. Others are made of strips of foil and paper rolled together.

The area of the active or charged surfaces of the condenser, and the quality and thickness of the glass or insulation, determines the amount or quantity of charge it will take, or the volume of the spark when it discharges. A good thing to remember about any condenser is that the charge resides on the surfaces of the glass or dielectric, while it is charged. The metal elements simply act as conductors to distribute the charge over the surface of the glass while charging, and to collect it when discharging.

This can be proved by charging a Leyden jar condenser of the type with separable jars. Then carefully remove the metal jars with one hand only, and by inserting one hand inside the glass jar, and drawing the other over its outer surface you can get a discharge to your hand, in the form of small sparks.

Condensers of other types and their uses for power, radio and other purposes will be discussed later.

9. METHODS OF STATIC CONTROL AND PROTECTION

Now that we have an idea of the general nature of static electricity it will be well to consider some of the forms in which it is often encountered in every day life outside the laboratory. Also some of the methods of controlling, or protecting against it, because in some of the forms in which it is produced by nature, and in our industries, it can be very harmful if not guarded against.

For example, one of the most common occurrences of static in the home, is when we walk across a heavy carpet, and by rubbing or scuffing action of our feet we collect a strong charge on our bodies, from the rug. Then when we come near to a grounded radiator, or water pipe, or large metal object, a discharge takes place from our body to it, in the form of a hot spark, sometimes from half inch to an inch in length.

In many cases the only effects of this are the surprising little shocks or rather humorous incidents caused by it. But in some cases it becomes so bad it is very objectionable, and even dangerous. For example a person's body so charged can unexpectedly ignite a gas flame, or vapor over some explosive cleaning fluid.

Where rugs are the source of objectionable static it is sometimes necessary to weave a few fine wires into the rug, or provide a metal strip at its edges, and ground these by connecting them to a water or steam pipe. Or it may be reduced by occasionally dampening the rug a little.

10. EXPLOSIONS FROM STATIC

When handling any cleaning fluids of an explosive nature, one should be very careful not to rub the cloth too briskly, as this may produce sparks and ignite the vapors. In dry cleaning plants the various pots and machines should have all parts connected together electrically, and thoroughly grounded with a ground wire.

Another common occurrence of static in a dangerous place is on large oil trucks. These trucks running on rubber tires over pavements on dry hot days, collect surprising charges. To prevent the danger of this accumulated charge sparking to the operator's hand or a can near a gasoline faucet, and causing an explosion, these trucks should all carry a grounding chain with one end attached to the metal frame of the truck, and the other end dragging on the ground or pavement. This equalizes the charges, or lets them flow back to earth before they build up to dangerous values.

Passenger busses are also equipped with such ground chains or wires sometimes, to prevent the passengers receiving a shock from static charges, when stepping on or off the bus.

11. STATIC ON BELTS

High speed belts in factories and industrial plants are often sources of surprising static charges. The rapid movement of the belt through the air and over the pulleys, will often build up charges that are very likely to be harmful if not eliminated. In some cases these charges from the belts will flash over to electric motors or generators on which the belts are running, and puncture the insulation of the windings of these machines, causing leaks of the power current through this damaged insulation, which may burn out the machine.

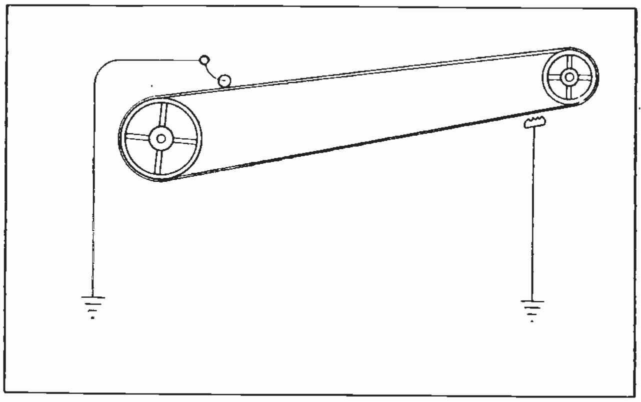

Fig. 5. Sketch showing how static can be removed from a belt, by use of either a metal comb or roller, and ground wire.

A workman around such belts may get such a shock from the static, that it will cause him to fall off a ladder, or to jump against some running machinery and be injured. These dangers can be eliminated by placing a metal roller on the belt, or a metal comb with sharp points near the belt, and then connecting these combs or rollers to earth, or a grounded pipe or metal framework, to carry away the charges before they become so large. The combs should be located from ¼ to ½ inch from the belt. The closer the better, as long as its teeth do not touch the belt. (See Figure 5 which shows both methods in use on a belt.)

Many serious fires and explosions of mysterious source in various plants, could have been prevented by a trained electrician with a knowledge of how static is formed and how to guard against it.

So you see, even in this first little section on static electricity alone, you are learning something which may be of great value to you on the job.

12. LIGHTNING

Lightning is probably the most sensational manifestation of static electricity that we know of.

Lightning is the discharge of enormous charges of static electricity accumulated on clouds. These charges are formed by the air currents striking the face of the clouds and causing condensation of the vapor or moisture in them. Then these small particles of moisture are blown upward, carrying negative charges to the top of the cloud, and leaving the bottom positively charged. (See Figure 6.)

Or the reverse action may take place by heavy condensation causing large drops of rain to fall through part of a cloud. Thus one side of a cloud may be charged positively and the other side negatively, to enormous pressures of many millions of volts difference in potential.

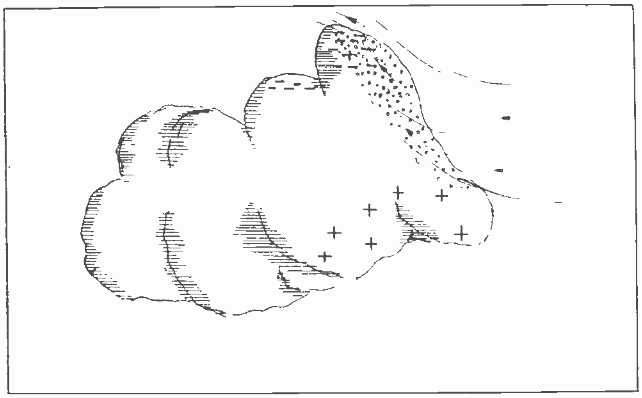

Fig. 6. Wind striking the face of a cloud, carries vapor and electrical charges to top of it.

When such a cloud comes near enough to earth, and its charge accumulates high enough, it will discharge to earth with explosive violence. (See Figure 7.)

The earth is assumed to be at zero potential. So any cloud that becomes strongly charged will discharge to earth if close enough. It is important to remember that whenever one body is charged to a higher potential or pressure than another, electricity tends to flow from the point of high potential to the low. The direction of this flow is usually assumed to be from positive to negative. It takes place very easily through wires when they are provided. But it is hard for it to flow through air, and requires very high pressure to force it to flash through air, in the case of sparks or lightning.

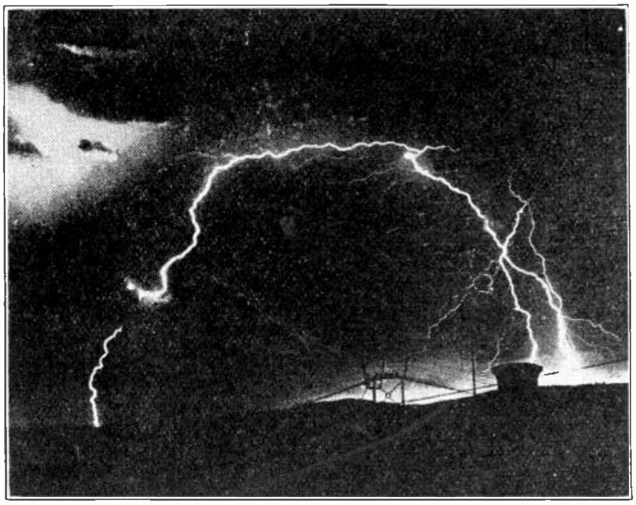

Fig. 7. Photo of a brilliant lightning flash at night.

Very often a side of one cloud will carry a negative charge, and the nearest side of another cloud a positive charge. When these charges become high enough a discharge will take place between the two clouds. (See Figure 8.)

13. FRANKLIN'S DISCOVERY

Benjamin Franklin with his kite and key experiment, about 1752, discovered that lightning was electricity, and would tend to follow the easiest path, or over any conducting material to earth.

He actually obtained sparks from a key on his kite line, to his fingers, and to ground. This led to the invention of the lightning rod, as a protection against lightning damage.

We say lightning "strikes" various objects such as trees, buildings, etc., because in its tendency to follow the easiest path to ground it makes use of such objects projecting upwards from the earth, as part of its discharge circuit or path.

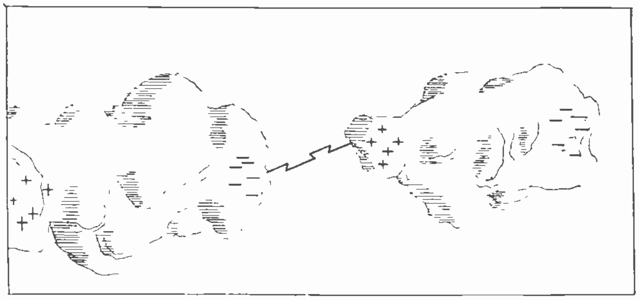

Fig. 8. Lightning flashing from one cloud to another, when clouds carry unlike charges.

Rain soaked trees, or trees with the natural sap in them are of lower electrical resistance than air and so are buildings of damp wood or masonry, or of metal. And the taller these objects are above the ground, the more likely they are to be struck by lightning.

When lightning does strike such objects, its intense heat vaporizes their moisture into steam, and causes other gases of combustion that produce explosive force. And this along with an electrostatic stress set up between the molecules of the material itself, causes the destructive action of lightning. This can be quite effectively prevented by use of properly installed lightning rods. (See Figure 10.)

14. LIGHTNING RODS

These rods are made of copper or material that is a good conductor of electricity. They should be installed on the tops, or very highest points of buildings or objects to be protected, and on all of the various corners or projections that are separated to any extent. These several rods are all connected together by a heavy copper cable, and then one or more ground cables of the same size, run from this to the ground by the most direct path. In running this ground cable, it should be as straight as possible, and if any turns or bends are made, they should be rounded or gradual bends.

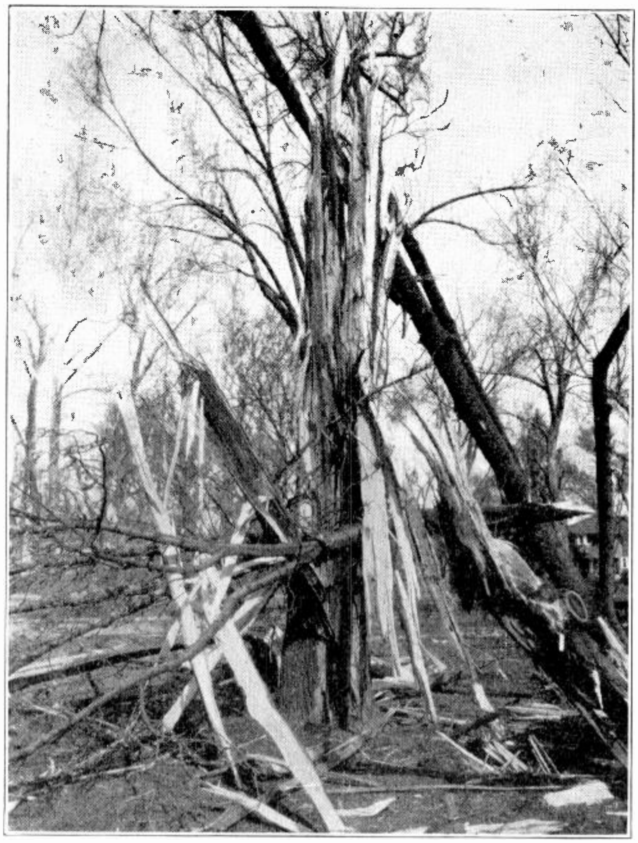

Fig. 9. Large tree shattered by lightning, showing the force and power of heavy lightning discharge.

The grounded end should be buried several feet in moist earth, or securely attached to a driven ground rod or pipe, or buried metal plate. The tips of lightning rods are usually sharply pointed, because it is easier for electricity to discharge to or from a pointed electrode, than a blunt one. These pointed rods, and heavy conductors of copper, form a much easier path to ground for electricity than the ordinary non-metal building does, and in some cases actually drain the atmosphere of small charges, before they become dangerously large. When a direct bolt of lightning does strike a rod, it usually flows through the cable to ground, doing little or no damage to the building, because the heavy charge of electricity flows through the good metal conductor without causing the terrific heat that it does in passing through air, wood, and other higher resistance materials.

Such rod systems have been proven to be a great protection, both by data collected on rodded and unrodded buildings in different parts of the country, and by actual tests in laboratories where several million volts of artificial lightning have been produced and used on miniature buildings.

Tests also prove that rods of a given height, protect a certain cone shaped area around them as shown in Figure 11. The diameter of this area at the base, is about three to four times the rod height. Many of the large oil reservoirs in western states are protected from lightning fires by installing tall masts around their edges, and sometimes with cables strung between the masts.

Electric power lines are often protected from lightning by running an extra wire above them on the peaks of the towers, and grounding it through each tower. (See Figure 12.)

More about protection of lines from lightning will be covered later under lightning arresters.

But in this section we have covered ordinary lightning protection, the general nature of static, and the methods of controlling it, in the places where it is most commonly found, in our homes and factories.

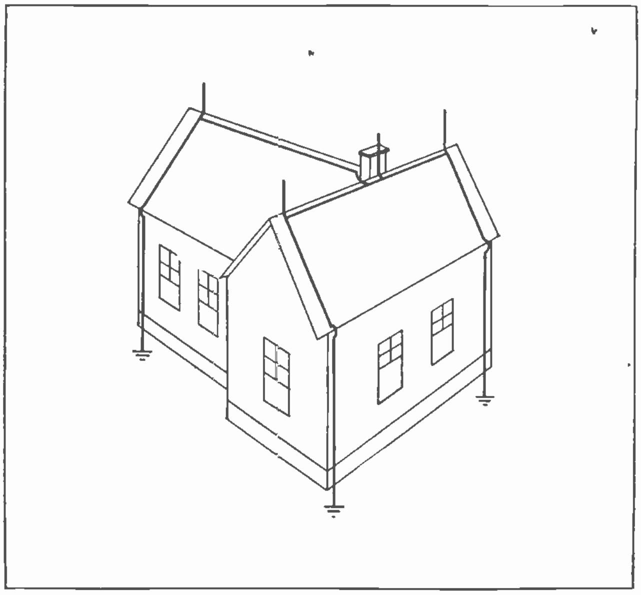

Fig. 10. Sketch of house equipped with lightning rods, to carry static and lightning safely to earth.

You will have many uses for the principles covered in this section, and they will help you to better understand certain things that will come up in your work in the field. Many of the hardest problems in "trouble shooting" on electrical systems, are easily solved by the trained man who knows these fundamental principles.

In the next section we will find out more about **Dynamic Electricity**, or the kind of "juice" that operates our motors, lights, etc.

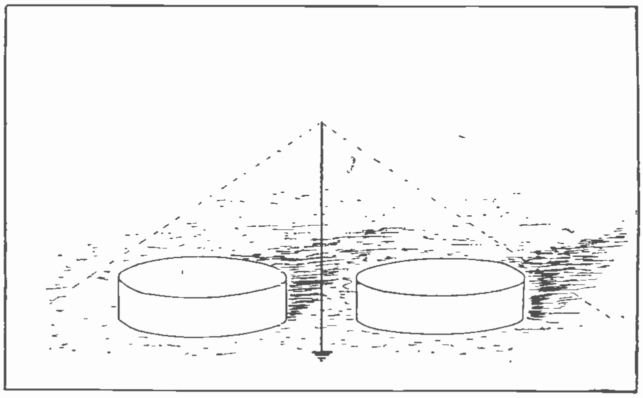

Fig. 11. Tall lightning rod used to protect oil tanks from lightning fires. The dotted lines show the area protected, and within which lightning will not strike.

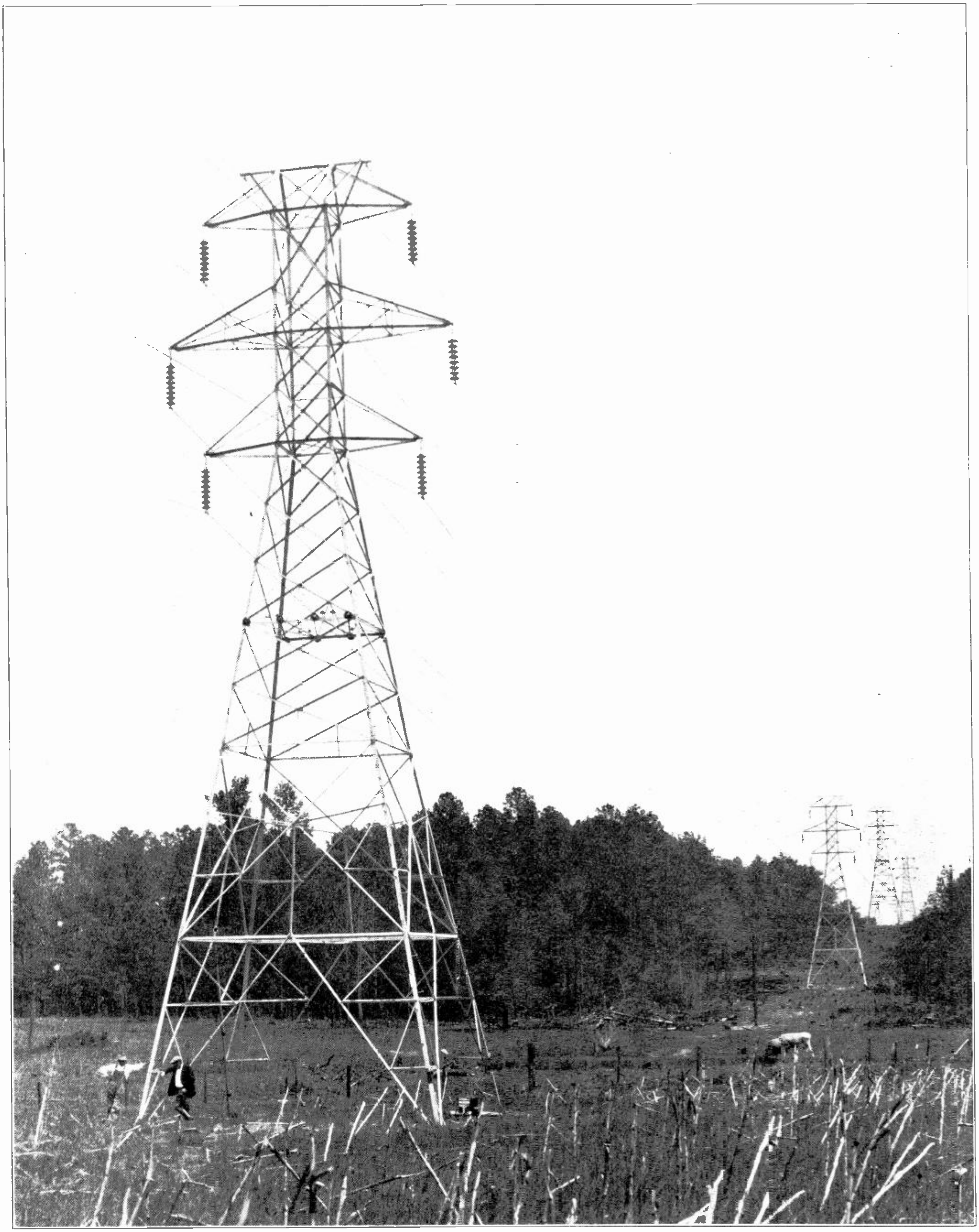

Photo, courtesy of Walter Bates Steel Corp.

Fig. 12. High voltage transmission line. Note the two smaller wires on the very top of the tower. These are to protect the line from lightning, and are "grounded" through the tower.

ELEMENTARY ELECTRICITY

SECTION TWO

DYNAMIC ELECTRICITY

As we have said before, Dynamic Electricity is electricity in motion, or the kind that flows through wires, lines, motors, lamps, etc. This is the kind, or rather the condition of electricity we find most useful, and from which we get our heat, light and power.

So it is very important that we have a good understanding of dynamic electricity, and how it is produced, controlled and used.

We found that static electricity could be produced by rubbing or friction of certain materials, and that it could be accumulated or stored up in condensers or on certain surfaces or bodies. Also that when it discharges it usually takes the form of an arc or spark. Although in some cases we caused these discharges to flow to earth through wires.

So for the very short period during which an accumulation of static is discharging or flowing, it could be said to be dynamic.

But sources of static do not supply enough electricity or furnish it for long enough periods to be of much use to us, so we do not produce dynamic electricity in this manner.

15. ELECTRIC CURRENT FLOW

Remember we do not **Create** electricity at all, but merely **set it in motion.** When we say a generator produces a flow of current in a wire, it is assumed that it simply sets in motion some of the free electrons already in the wire.

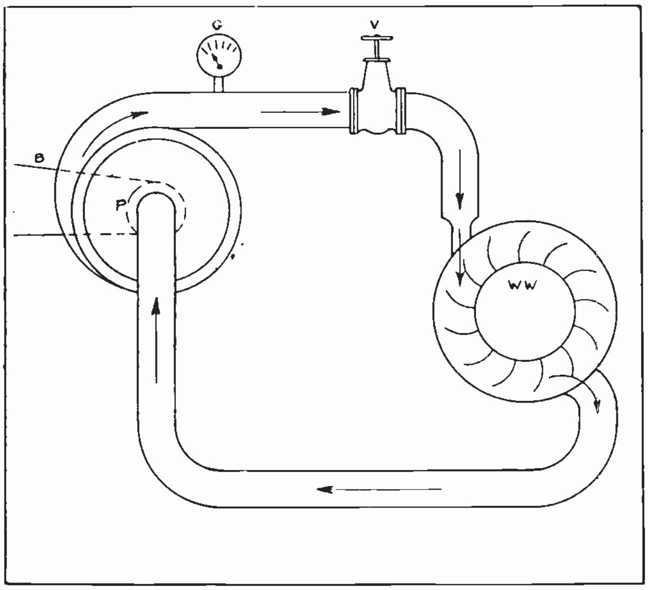

Fig 1. Water pump supplying pressure to cause water to flow through pipe and operate water wheel. The purpose of the pump here is similar to that of a battery or generator in an electrical circuit.

It is well to consider dynamic electricity as very similar in many ways to water in a pipe line. For example, we can have water in a closed pipe line, and this water will have no movement, force or power, unless a pump is used to set up the pressure. (See Fig. 1.) In this illustration the pump (P) is the source of pressure to set the water in motion, and cause current to flow. The pump is driven by belt (B) and develops pressure to force the water through the pipe to the water wheel (WW). The gauge (G) indicates the amount of pressure developed by the pump, and the valve (V) will start, stop, and control the water flow.

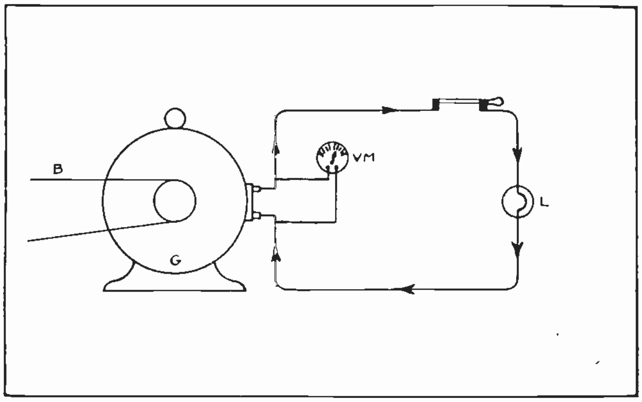

Fig. 2. Dynamo supplying electric pressure to force current to flow through the wires and lamp. No current will flow without a source of pressure or voltage.

In Fig. 2 an electric generator or dynamo (G) is shown producing electrical pressure to force current to flow through the wires to operate the lamp (L).

Here the volt meter (V.M.) indicates the amount of pressure set up by the generator, and the switch (S) will start or stop, the flow of current.

16. PRODUCING DYNAMIC ELECTRICITY

One of our first problems is to find out how to develop electrical pressure to set electricity in motion.

There are three methods of doing this, which are all common, and should be kept in mind. They are called the **thermal method, chemical method,** and **induction** or **mechanical method.**

The induction method is the basis of all our modern generators, and converts mechanical power into electrical energy. This method is by far the most commonly used of the three, but as both of the others also have many practical uses, we will cover them briefly first.

17. THERMAL METHOD

To generate electricity by the **Thermal Method**, we simply join the ends of two pieces of unlike metal together and heat them at the joint. (See Fig. 3.)

The heat acts differently on the different metals, and the activity it sets up within them will actually cause a small current of electricity to flow through the wires and meter attached, as shown in the figure.

We can use a piece of copper and one of iron for this device, or better still a rod of bismuth, and one of antimony.

These devices are called **Thermo Couples.** As they are only capable of producing very small amounts of electric current, and at very low pressures, we do not use this method for generating electricity for light or power.

However as the amount of electric pressure produced by a certain thermocouple is proportional to the amount of heat applied, these devices are very useful for measuring temperatures of ovens, furnaces, etc.

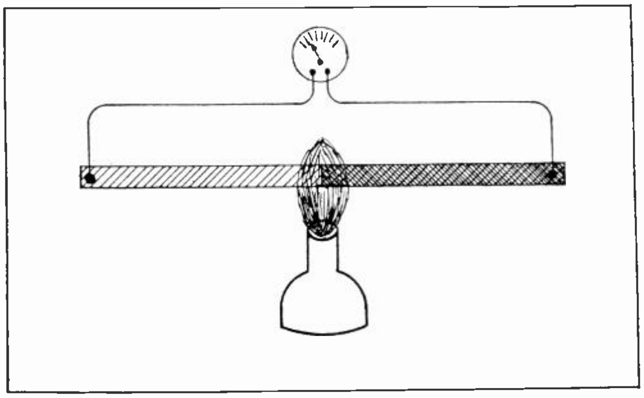

Fig. 3. Heating the joint of two unlike metals, produces a small amount of electric pressure and current flow through the meter in the circuit.

For this purpose a proper element or "couple" is enclosed in a non-combustible tube, so it can be inserted right into the flames or heat of a furnace.

Wires connected to the "couple" are brought out of the tube to a meter which can be adjusted and marked to read the temperature direct, in degrees. (See Fig. 4.)

18. CHEMICAL METHOD

The **chemical method** of producing electricity, is one with which you are probably more familiar, as this is the principle of our electric cells and batteries.

This source of electric supply is also very simple. It is based on the action of chemical solutions on various metals.

If we fill a jar with an acid solution, and immerse in it a piece of zinc and one of copper, the acid will immediately commence to act on these metals. And because the intensity and nature of its action is different on the two unlike metals, we again have a difference of electric pressure set up between the copper and zinc elements. If we connect them together with wires, and place a meter or lamp in this circuit, current will start to flow at once. (See Figure 5.)

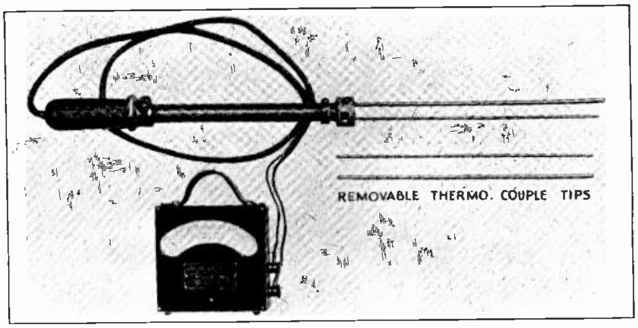

Fig. 4. Portable pyrometer for measuring high temperatures in ovens or furnaces, by use of "thermo couples."

Various kinds of metals and acids can be used. Even strong salt water will do with certain metals. But a solution of sulphuric acid, and the copper and zinc elements produce higher electric pressures than many other combinations, and are more commonly used.

Such devices are called **Primary Cells**, and a group of them connected together is called an **Electric Battery.**

It is interesting to know how the discovery of this form of electric source came about.

In the 17th Century, an Italian scientist named Galvani, discovered that frog legs would twitch and react to sparks of static electricity.

In 1779 Alessandro Volta in performing some experiments, accidentally discovered that pieces of metal with an acid soaked cloth between them would produce an electric spark.

He stacked up piles of metal disks, spaced with wet pieces of cloth, and developed our first known electric battery, from which he obtained quite strong currents and small arcs. And we find that many of our most important electrical devices of today, were discovered or developed from some such simple experiments.

Nowadays we have not only the wet primary cell, but also convenient dry cells, and large storage batteries, using this principle.

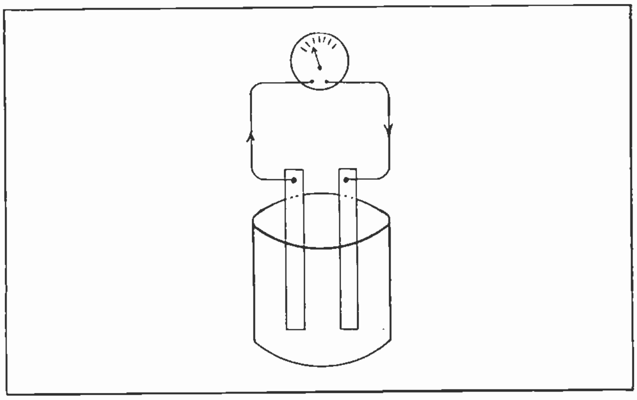

Fig. 5. Simple electric cell. Chemical action on the copper and zinc strips produces electric pressure.

These devices are used by the millions, to supply small amounts of electricity for various uses today.

Each type will be taken up thoroughly in a later section on cells and batteries.

19. MECHANICAL OR INDUCTION METHOD

The **Mechanical Method** of producing electricity is also very simple in principle, and it is this method that is used in all our great power plants today.

If we simply take a magnet as in Fig. 6, and quickly move a piece of wire between its poles, the wire will have an electric pressure induced in it.

Any magnet has between its poles a field of invisible lines of force. These are shown by the dotted lines in the Figure.

Only about one hundred years ago, a man named Michael Farady, discovered that moving a wire rapidly through these lines of force in a position to cut across their path, would generate electricity in the wire.

This can be proven by connecting a meter to the ends of the moving wire, by means of other wires as shown in Figure 6.

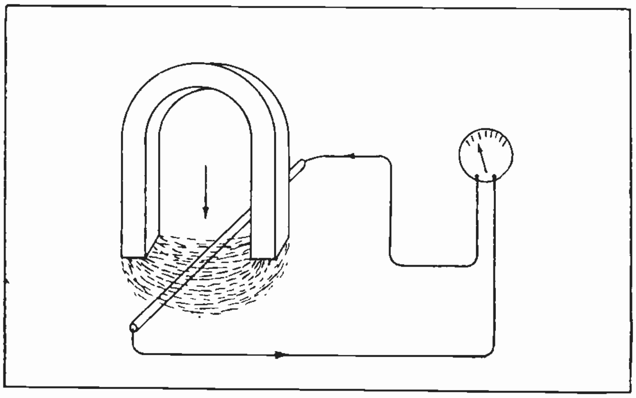

Fig. 6. Moving a wire through a magnet field induces pressure in the wire, and causes current to flow in the meter circuit.

Every time the wire (A) is moved up or down, through the magnetic field, the meter needle will indicate a flow of current.

The **direction** of this induced current changes, as we change the **direction** of movement of the wire. The **amount** of electric pressure set up by this type of device depends on the **strength** or **density** of the magnetic lines of force, and the **speed** with which the wire is moved through them.

Now if we were to mount a number of wires on a revolving armature, and spin them rapidly, between powerful magnets, we can produce considerable amounts of dynamic electricity by this method. (See Fig. 7.)

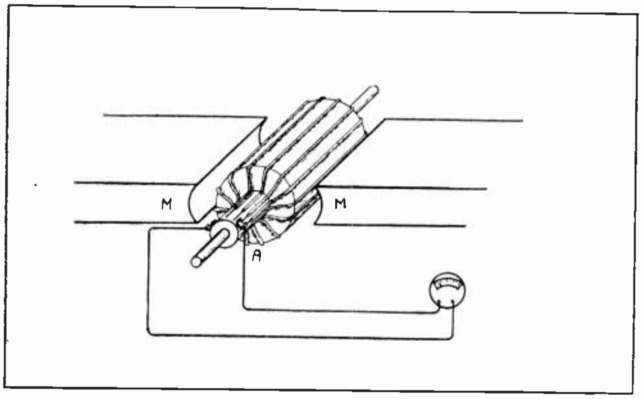

Fig. 7. Elementary type of armature A, with wires mounted on it to revolve in a strong magnetic field from magnets M, M.

It is in just this manner that our great power plant generators of thousands of horse power are made.

We will take up in detail their principles of operation and construction in a later section.

CONDUCTORS AND INSULATORS

20. CONDUCTORS

Now that we know how electricity can be produced, we must consider how to get it from the generators or source of supply to the places and devices where we wish to use it.

To do this we use proper electrical **Conductors** or wires.

We have found that electricity will pass or flow through some materials very easily while with others it is very difficult to get electricity through them at all. And we have good use for both.

In order to use electricity, we must be able to provide a good easy path for it to flow from the generators, to our lamps and motors which it is to operate. We must also be able to confine it to these proper paths, and prevent its wasteful or harmful leakage where materials or persons might come in contact with the wires.

The materials that carry electricity easily, we call **Conductors** and use the best of them to carry it where we want it to go.

21. INSULATORS

Those materials that tend to prevent the flow of electricity or not allow it to pass through them, we call **Insulators,** and use them to confine electricity to the proper conductors, and to prevent it leaking or flowing to other objects or places where we do not want it.

No material that we know of is a perfect conductor or insulator of electricity, but some are much better than others in each case. Both are so necessary and important in the use and control of electricity that a few of the best of each are given in the following lists:—

CONDUCTORS	INSULATORS
Silver	Glass
Copper	Mica
Gold	Porcelain
Aluminum	Enamel
Zinc	Rubber
Bronze	Wood (dry or oiled)
Platinum	Bakelite
Nickel	Fibre
Steel	Paper (dry or oiled)
Iron	Oil
Lead	Waxes
German Silver	Air
Mercury	
Water (ordinary)	
Carbon	
Acids	

The conductors and insulators in this list are all used to some extent in electrical machines and devices.

Silver is one of the best conductors known, but because of its very high cost, and certain mechanical properties, it is not much used.

Copper is also an excellent conductor, and is by far the most commonly used in all electric lines and machines.

You will note that most of the conductors are metals, although ordinary water with its usual impurities is a fair conductor, and acids are also.

All the insulators are non-metallic. Glass and Mica are two of the best insulators, and rubber is also excellent. Rubber is most commonly used in insulating electric wires, because of its flexibility, allowing them to bend freely without damaging the insulation.

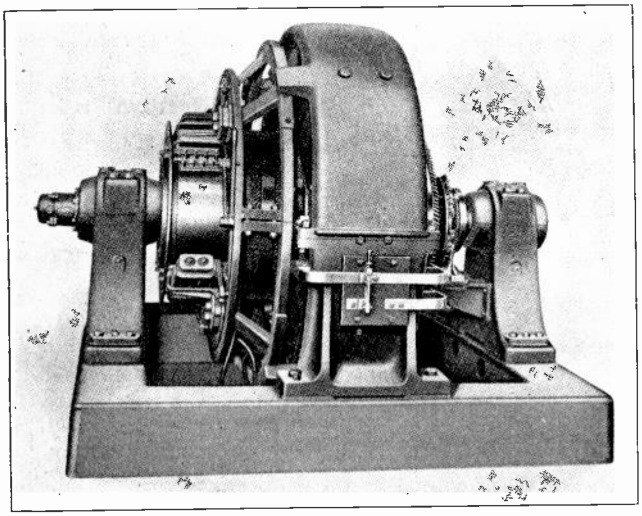

Fig. 8. Photo of a large generator, which produces its voltage by induction.

22. INSULATED WIRES

A good example of a conductor and insulator properly used together is the common rubber covered copper wire. The copper providing an excellent path for the electric current to flow through, and the rubber an excellent insulator to confine it to the wire, and prevent its escape where the wire might otherwise touch metal objects or earth. (See Fig. 9.)

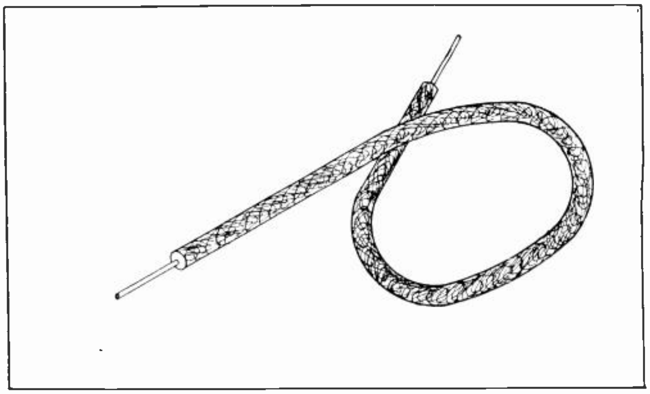

Fig. 9. Sketch of insulated wire. The copper wire is covered with rubber, and cotton braid.

23. ELECTRIC CIRCUITS

In order to use electricity with any device, we must always provide a complete **Circuit** or path, for the current to flow from the generator or source, to the device using it, and then back again to the generator. (See Fig. 10.)

This endless path or circuit includes the coils or windings inside the generator, the line wires from the generator to the lamp, motor or other device, and any switches or instruments that may be in the circuit anywhere.

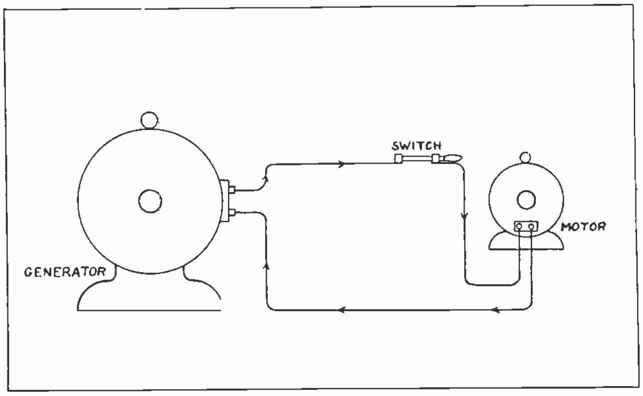

Fig. 10. Complete electric circuit. The current flows over the top wire from the generator to the motor, then back along the lower wire to the generator.

Current will only flow when all parts of this circuit are complete, all switches closed, and all wires connected. To start or stop the flow of electricity and the operation of the devices, we only need to close or open the switches provided.

All line wires, switches, and coils within the machines are made of conducting material, usually copper.

All these wires, coils, etc. must be insulated, usually with rubber, cotton or oil, and sometimes with air only, on certain parts.

So we can readily see the importance of a knowledge of common conductors, insulators and circuits, in the use and handling of electricity.

In later sections we will take up more of the exact properties of various conductors and insulators, and various types of circuits.

24. EFFECTS OF DYNAMIC ELECTRICITY

How are we going to make use of this electricity which we have learned how to produce and convey from the generators to our electrical devices?

First we must know something about the useful effects of electricity and how to obtain them.

Dynamic electricity flowing through a circuit from any generator or source, can produce four valuable effects, if we know how to obtain them.

These are called the **magnetic, heating, chemical** and **physiological** effects.

25. MAGNETIC EFFECT

Whenever electricity flows through any wire or conductor, it sets up around that conductor a field of whirling magnetic lines of force. These lines are invisible and we cannot feel them. But we can prove they exist by placing a magnetic compass needle near the wire. (See Fig. 11.)

As soon as current is started in the wire, the needle will be deflected from its true North and South position.

The direction and amount of movement of the needle will depend on the direction and the amount of current flowing.

For example, if we reverse the direction of current in the wire, the compass will deflect in the opposite direction. If the current is increased or decreased in the wire, the needle will increase or decrease its amount of deflection accordingly.

This magnetic effect of dynamic electricity is of the greatest importance, as it is the one that we use in all generators, motors, and electro-magnets.

If we wind a coil of insulated wire around a core of soft iron and pass an electric current through the coil, the iron will become strongly magnetized at once, from the magnetic lines set up around the turns of wire.

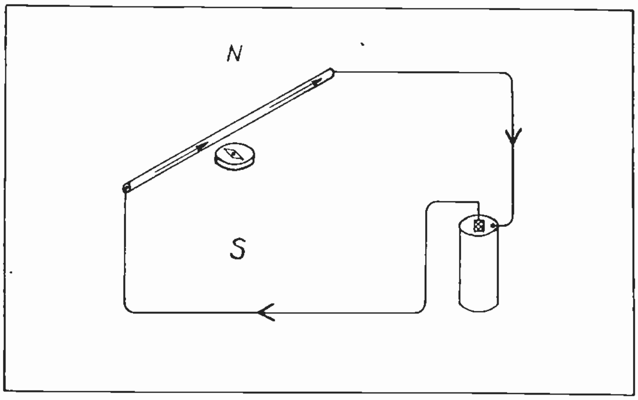

Fig. 11. Showing a compass needle deflected from its north and south position, by the magnetic flux around a wire carrying current.

These electro magnets have thousands of uses in electric lifting magnets, relays, bells, controllers, motors, generators, etc. We will make a very thorough study of them and this magnetic effect of electricity a little later.

A good demonstration that you can easily make of this useful effect of electricity, is to wind a few turns of insulated wire around a nail, bolt, or screwdriver, and connect the coil ends to a dry cell.

As soon as the circuit is closed the iron will become magnetized and attract other nails, tacks, etc. But as soon as the wire is disconnected from the cell, the iron loses most of its magnetism.

The practical man can often find many small, handy uses for this knowledge in his daily work.

26. HEATING EFFECT

Electric current flowing through a wire always produces a certain amount of heat in that wire.

In copper wires of low resistance this heat may not be noticeable, but if we overload them or cause too much current to flow, even copper wires will become hot and burn their insulation or possibly melt.

When we want to create heat from electricity, we apply high enough pressure to cause current to flow through high resistance wires or coils, such as iron or German silver wire. And because of their high resistance, a moderate amount of current will cause them to become red hot, or even white hot in some cases.

Our electric toasters, flat irons, waffle irons, table grills, portable heaters, electric ranges, ironers, soldering irons, etc. are all examples of this method of producing electric heat.

Large baking and enameling ovens, heat treating furnaces, etc., in industrial plants, use this principle.

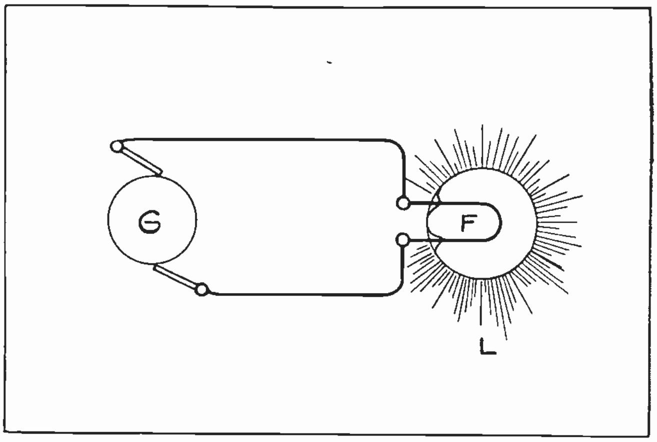

Fig. 12. Electric current flowing through filament wire in the lamp, produces intense heat and light.

27. ELECTRIC LIGHT

The incandescent lamp operates on the same principle.

Here we have a wire of tungsten metal, which is high resistance, and will not melt at white heat. This filament wire is enclosed in a glass bulb from which the air has been drawn to prevent it burning. Then current is forced through it in the right amount to bring it to white hot or incandescent heat, so it radiates light. (See Fig. 12.)

An electric arc produces heat and light on about the same principle. In this case instead of using a high resistance wire, we use voltage high enough to force current through air and the gases formed by the arc. This mixture of air and gas is very high resistance, and the current flowing in the form of an arc produces the highest temperatures made by man. (See Fig. 13.)

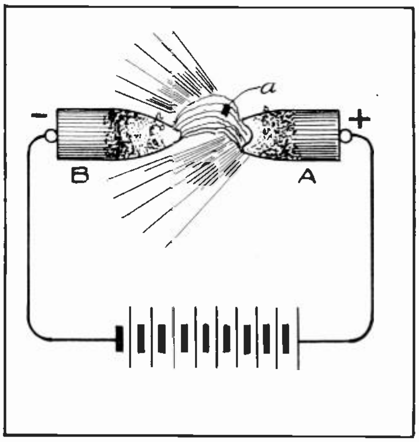

Fig. 13. Electric Arc formed by current between carbon electrodes.

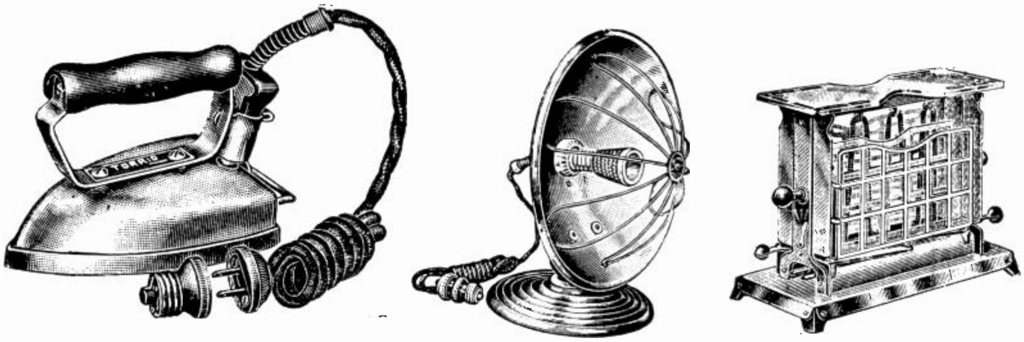

Fig. 14. Ordinary electric flat iron, glow heater, and toaster, all devices using the heating effect of electricity.

Great furnaces of this type using carbon electrodes from 12 inches to 30 inches in diameter, and 6 to 12 feet long, and thousands of amperes of electric current, melt tons of steel in our steel mills.

The arc was one of the first forms of electric light. And many large arc lamps are in use today, for street lights, flood lights, search lights, etc.

So we see that the heating effect of electricity is also very important to know how to use.

Fig. 14 shows several devices which use electric heat, produced by current flowing through high resistance wires.

28. CHEMICAL EFFECT

When electricity is passed through various chemical solutions it has the power to decompose them. And if we immerse two pieces of metal in an acid solution, and allow current to flow from one to the other through the solution, it will carry away particles of the metal at which it enters the liquid and deposit them on the other metal. This is the method and effect used in electro-plating, and is used very extensively in covering cheaper metal objects with gold, silver, chromium, nickel, etc. (See Fig. 15.)

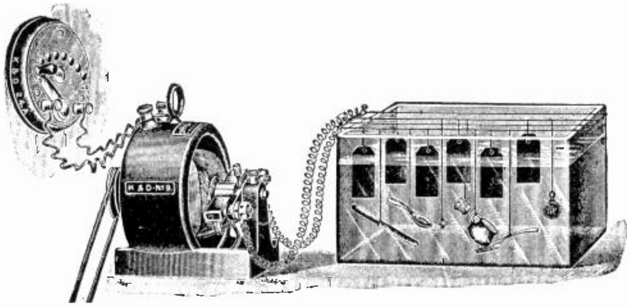

Fig. 15. Small electro-plating outfit, consisting of generator, rheostat and plating vat.

This action is also called **Electrolytic** action, and is used in the refining and purifying of some of our metals.

Another example of the chemical effect of electricity is in the charging and discharging of our storage batteries.

29. PHYSIOLOGICAL EFFECT

This effect of electricity is less commonly used than those above mentioned, and it usually refers to the effect of electricity on the human body.

We all know that if we touch live electric wires we feel a shock, or the effect of electricity on our nerves and muscles. If the voltage is low, this may be only a mild and somewhat pleasant sensation. If the voltage is high and from a heavy power wire, the shock may be injurious or even fatal. So it is best to always be very careful in handling electric wires and equipment.

Doctors and hospitals use the shocking effects of electricity, properly controlled, for very beneficial treatments of certain body disorders and diseases.

They also use the heating effect and chemical effect of electricity, by applying metal plates or electrodes to various parts of the body, and passing carefully controlled currents of either direct or alternating curent, through affected parts of the body.

So this physiological effect of electricity is also very important in its modern and proper use.

ELEMENTARY ELECTRICITY

SECTION THREE

ELECTRIC UNITS AND SYMBOLS

In dealing with electricity, we must have definite units to measure it and express it in certain quantities.

We have units of measurement for water, steam, coal, money, groceries, etc. and we need them for electricity, as it is as common and necessary today as many of these other items.

We speak of water in pints, quarts, or gallons, all of which are units of different sizes, and which we easily understand because we are familiar with the size and amount of each.

We speak of steam in pounds pressure, and degrees of heat. Coal is measured by the pound, or the larger unit called the ton, money in dollars and cents, groceries by the pound or dozen, etc.

So we can see that we need to have these definite units of measurement to deal with all the things we us in our daily life. And the man who intends to use electricity, should know the units for its measurement, those which measure its effects, and the important factors in electrical circuits.

There are only a few of the more common units needed by the practical man in ordinary work, and they are easy and simple to use.

With these units you can determine the amount of current flowing in a line, or through a motor or lamp. Also the amount required to operate a given machine or device, and its cost of operation as well.

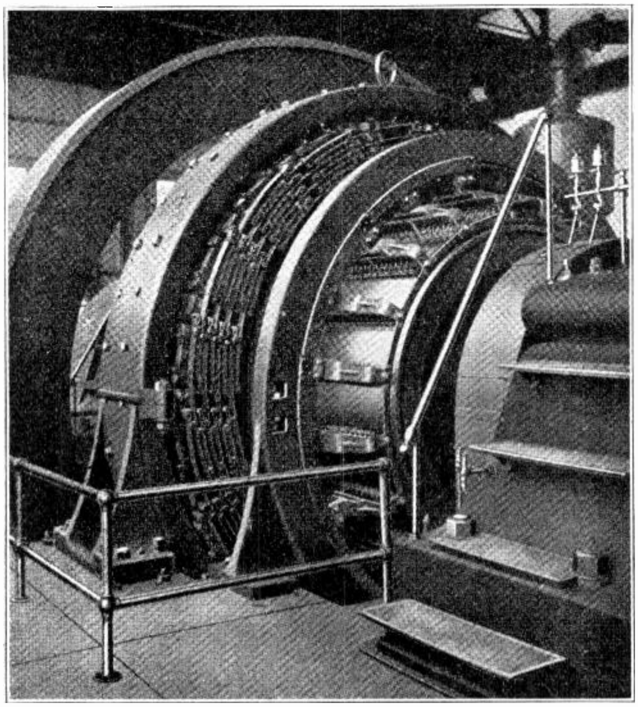

Fig. 1. Large D. C. generator. It is rated as follows, 2000 Kw., 250 V., 8000 I. After carefully reading the pages on units and symbols, you should easily understand this rating.

It is not necessary to memorize all these units at once, but you should study them carefully, to get a good understanding of the meaning and use of each. Then by practicing their use you will soon have them fixed in your memory.

Of course we know that we cannot weigh or measure electricity as we do coal or water. So we measure its effects, and establish our units in this manner.

30. ELECTRIC QUANTITY

The Coulomb is the practical small unit of electrical quantity. We determine this quantity by the chemical effect of electricity flowing through a device called a "voltameter." (See Fig. 2.)

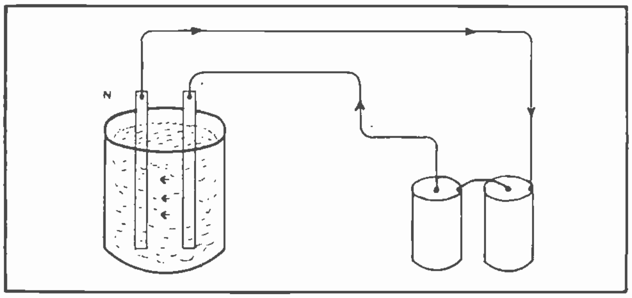

Fig. 2. Sketch of a "voltameter," or device for measuring electric quantity by work done on a plating principle.

Here we have two pieces of copper immersed in a solution of copper sulphate, and a battery connected to them and passing current through the solution from one electrode to the other. As you have already learned, this will cause some copper to leave the positive plate and deposit on the negative plate.

Of course the more electricity we pass through this device, the more copper it will deposit, or the more work it will do. So by carefully weighing the amount of copper transferred, we can set a certain unit of electric quantity. This unit of one Coulomb is the amount required to deposit .0003293 gram of copper from one plate to the other. Or with silver, to deposit .001118 gram, from a standard solution of silver nitrate.

These are very small amounts and are odd figures, and need not be remembered. But it serves to illustrate the method of measuring electrical quantity by its effect or work done.

31. ELECTRIC CURRENT

The Ampere is our unit of electric current or rate of flow. It is a unit you will use much more often than the Coulomb.

An electric current of one ampere is flowing when electricity passes through a circuit at the rate of one Coulomb per second. So we see this unit considers both quantity and time, and tells us just how fast the current flows. Knowing the amount of current in amperes gives us some idea how much work we could expect it to do in a given time.

For example we say a gallon of water is a unit of quantity, and compares to a Coulomb of electricity. But if we say water is flowing at the rate of so many gallons per minute or per second, then we can get an idea how much work it would do, or how much we would get in an hour or a day at that rate.

We say a certain lamp uses ½ ampere, or that a motor uses 50 amperes, which means that they require a continual rate of flow of those amounts of current to operate them.

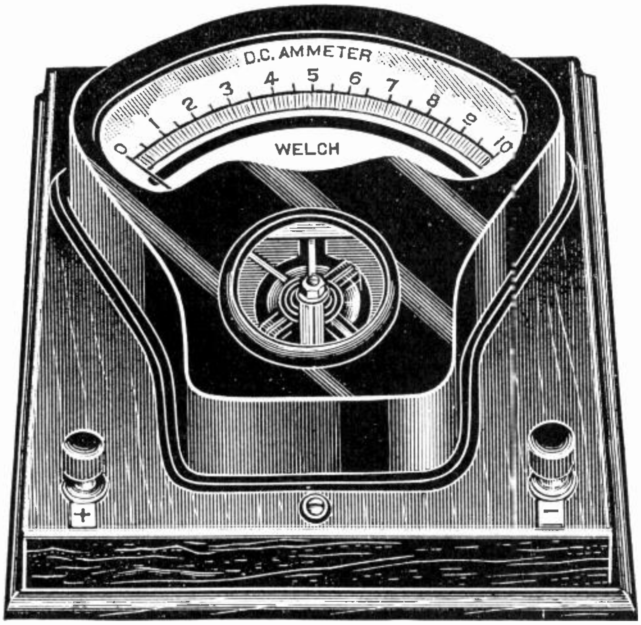

Fig. 3. Portable ammeter, used to measure electric currents.

The current of any circuit or device can be measured with an ammeter such as shown in Fig. 3. The practical man will have many occasions to use this device and the unit **Ampere** in his electrical work.

32. ELECTRIC PRESSURE

The **volt** is our unit of electric pressure, and is used to measure or express the amount of pressure required to force a given current to flow.

As we have already learned, all electric wires or conductors offer some resistance to the flow of current. So we must have electric pressure to cause current to flow in any circuit or device.

This pressure is often called **Electro-Motive-Force** (Abbreviated E. M. F.), and meaning the force that moves electricity. It is also sometimes called **Potential.**

So we say a certain battery produces 6 volts pressure, or a generator produces 110 or 440 volts pressure. Or that a power line has 220,000 volts potential or pressure. This gives us an idea of the amount of electro-motive-force available, the same as if we said a boiler produces 300 pounds of steam pressure, or a pump 100 pounds of water pressure.

One volt is the exact amount of pressure required to force one ampere of current through one Ohm of resistance. The voltage of any machine or circuit can be measured with a voltmeter. See Fig. 4, which shows a photo cut of a voltmeter.

33. ELECTRICAL RESISTANCE

The **Ohm** is the standard unit of electrical resistance, by which we measure or compare the resistance of any electrical circuit or device.

Remember every wire and device has some resistance to current flow, as we have no perfect conductors. Naturally this resistance limits or controls the flow of current, the same as friction in a pipe or a partly closed valve, would limit and control water or steam flow.

So it is very important that we know the unit to measure and determine the resistance of electrical circuits and machines.

The standard Ohm, is the resistance of a column of mercury, 106.3 centimeters long and 1 square Millimeter in cross sectional area. Or this is 41.85 inches long and about 1/25th inch in diameter. This standard resistance is taken always at 32 degrees Fahrenheit, or Zero degrees centigrade, because the resistance is not the same at all temperatures.

34. FACTORS GOVERNING RESISTANCE

It is important to remember that the resistance of any conductor depends on the kind of material, its length, area, and temperature.

For example we know that copper wires are of much lower resistance than iron or steel wires. And the longer a wire is, the greater will be its resistance. The larger it is in cross section or area the lower will be its resistance. And with all of our common metals the resistance will increase slightly as their temperature increases. Carbon and certain liquids are exceptions to this rule, and their resistance gets less as their temperature increases.

It is interesting and convenient to know that a piece of No. 10 copper wire 1000 feet long has a resistance of about one ohm. A No. 10 wire is about 1/10th of an inch in diameter.

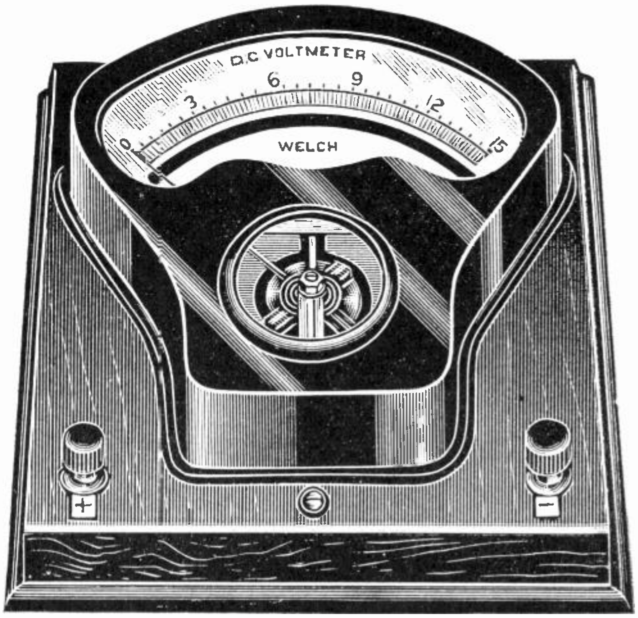

Fig. 4. Portable voltmeter used to measure electric pressures or voltages.

Number 14 wire such as commonly used in house wiring, has about 2.5 ohms resistance per thousand feet.

A piece of No. 30 copper wire 10 feet long has about one ohm resistance, while a piece of No. 30 German Silver wire only 6.2 inches long will have about one ohm resistance. Note carefully the difference in resistance of these various wires according to their size, length and material, and it will help you get a better understanding of how the wires and their resistance will tend to control the current flow.

A little later we will give a definite law or rule explaining this relation between current and resistance.

The resistance of wires and materials can be measured with an ohmmeter, and other instruments which will be explained later.

35. **SPECIFIC RESISTANCE** is a term we use to express and compare the resistance of various materials. To do this we of course take pieces of the same size of each material. Usually this piece is one cubic centimeter in size, or sometimes one cubic inch. The centimeter is about .4 of an inch.

The specific resistance of any metal or material means the resistance to flow of electricity through a centimeter cube of this material, from one side to the opposite side.

The resistance of a piece of ordinary metal of this size is usually a small fraction of one ohm, so is expressed in **Microhms**, meaning millionths of an ohm.

The following table gives the specific resistance of some of our common materials. It is not necessary to memorize these, but is well to observe and compare the specific resistance of several of the materials familiar to you, such as copper, aluminum, iron, mercury, etc.

In this manner you can get an idea of their comparative values as electrical conductors, and you can always refer back to this table whenever you need to know or use any of these values.

Specific resistance of various common materials, at 0 degrees centigrade:

MATERIALS	Specific resistance in Microhms. Centimeter cube	Inch cube
Silver (Annealed)	1.49	.587
Copper (Annealed)	1.59	.627
Copper (Hard)	1.62	.638
Gold	2.20	
Aluminum	2.61	
Zinc	5.38	
Phosphor Bronze (Commercial)	8.48	3.34
Bronze	17.80	
Platinum (Annealed)	8.98	3.54
Nickel (Commercial)	9.90	
Steel (Soft)	11.80	
Steel (Wire)	13.50	
Steel (Hard)	45.60	
Iron (Pure)	8.85	
Iron (Wrought)	13.80	5.45
Iron (Cast-soft)	74.40	
Lead	19.80	
German Silver	33.10	
German Silver Wire	20.90	8.24
Mercury	94.07	
Water (Ordinary)	1200. to 12,000.	
Carbon	400. to 1150.00	
Carbon (Arc)	5100. to 7600.00	

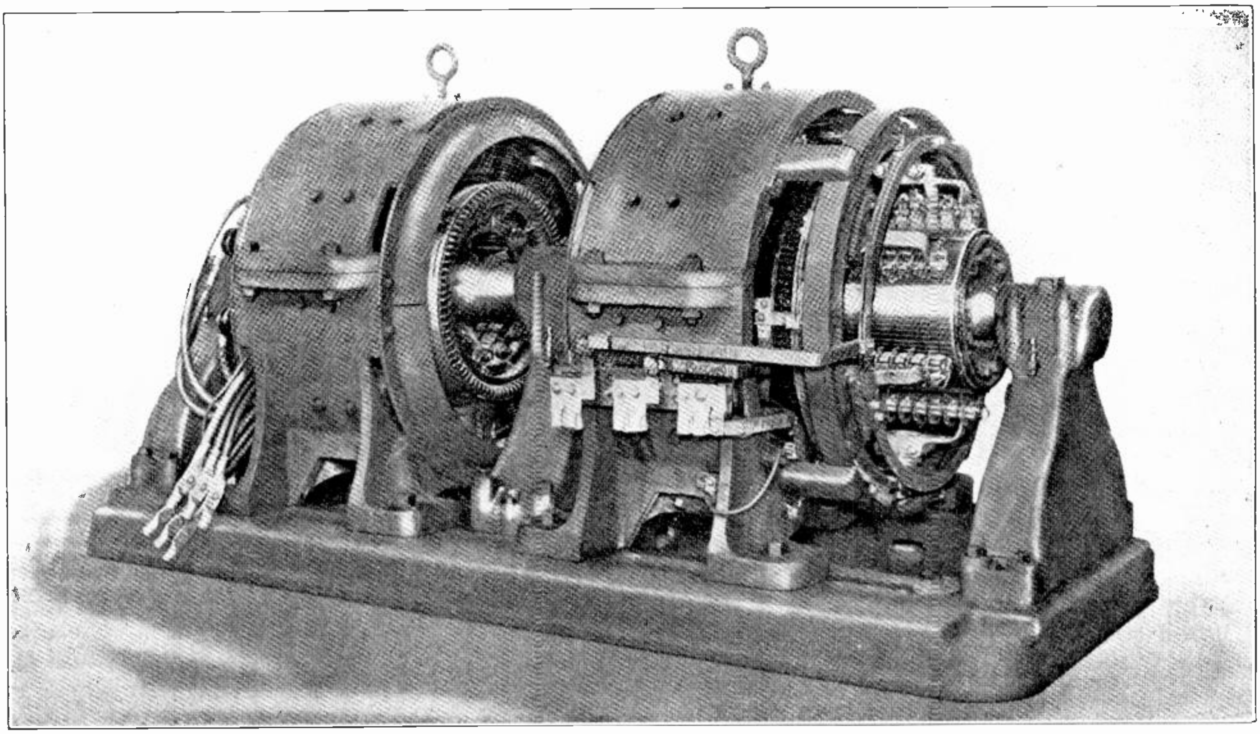

Fig. 5. If this machine is rated at 500 Kw., how many horse power is this equal to?

36. **THE MHO** is the unit of conductance, and expresses the conductivity of a wire, or the exact opposite of resistance. Its use will be explained later.

37. ELECTRIC POWER UNITS

The **Watt** is our unit of electric power. And this is the unit by which we determine the amount of heat, light, or power we can get from electricity. It is also the unit by which we rate the power produced or consumed by many small electrical devices.

One Watt is the amount of power produced by one ampere flowing under a pressure of one volt.

It requires 746 watts to make one horse power. So we can see that the watt is too small a unit to deal with our larger amounts of electric power. For this use we have the **Kilowatt,** or 1000 watts. The prefix "Kilo," is used with many electric units at times, and always means 1000.

One Kilowatt is equal to approximately 1.34 H. P.

The horse power is the power required to lift 33,000 pounds, one foot in one minute, or 550 pounds, 1 foot in one second. It is often referred to as 33,000 foot pounds per minute.

The **Watt Hour** is a commonly used unit, and means the power used at the rate of one watt, for one hour continuously.

The **Kilowatt Hour** is the larger and more common unit, and means the power used at the rate of one kilowatt, for one hour. The kilowatt hour is the unit used to buy and sell electric power, and electricity is commonly sold for so many cents per kilowatt hour.

For example, suppose you were asked to find the cost of operation of a 10 H. P. motor for 50 hours, with electricity costing 6 cents per kilowatt hour.

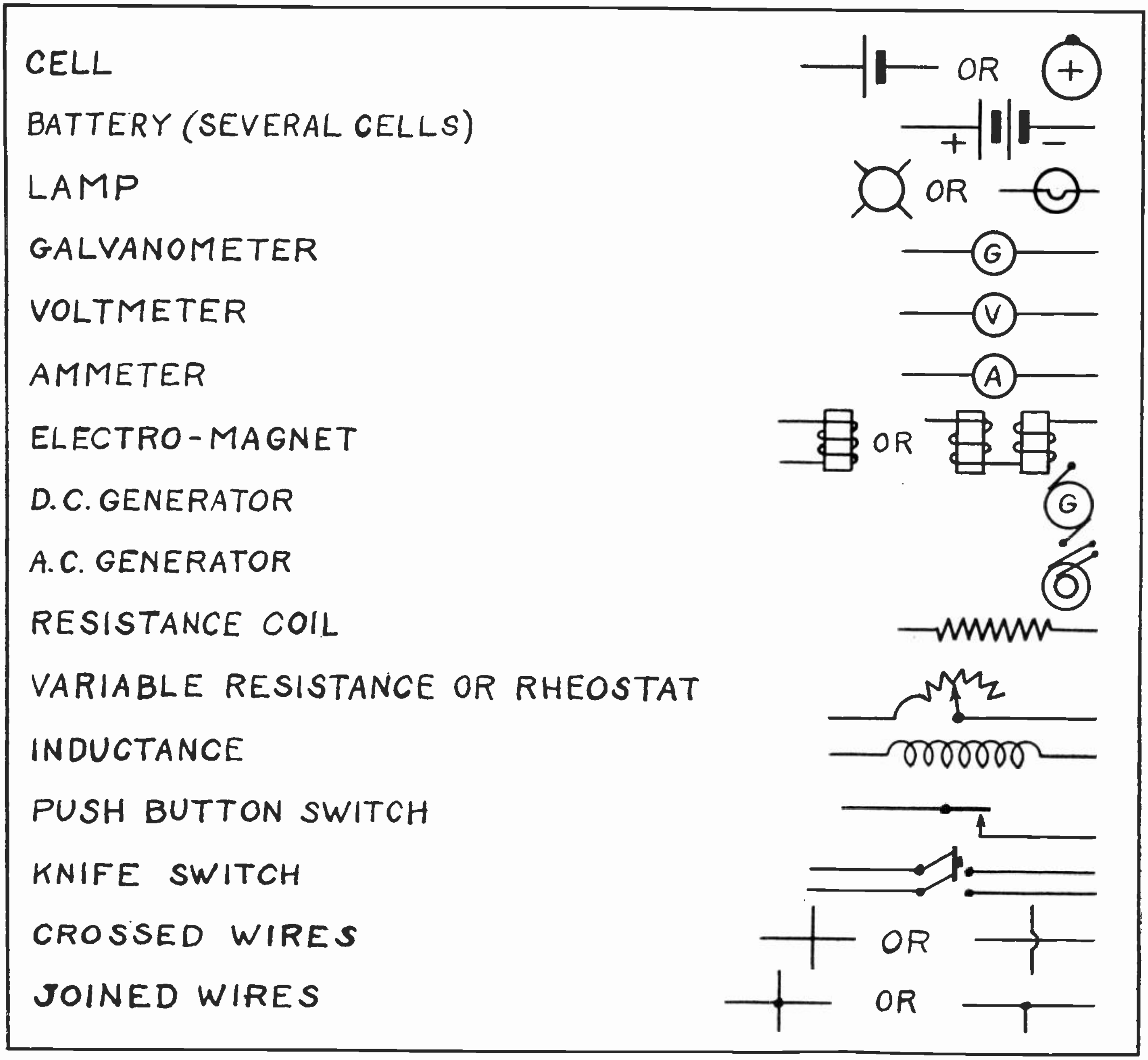

Fig. 5B. Some of the most common symbols used in electrical diagrams.

If one H. P. is equal to 746 watts, then a 10 H. P. motor will use 10x746 or 7460 watts. Then to change this to kilowatts, we divide 7460 by 1000, or 7460 divided by 1000 equals 7.46 kilowatts.

For a period of 50 hours this would use a total of 50x7.46 or 373 kilowatt hours.

Then 373x.06 equals $22.38 total cost.

We have not considered the efficiency of the motor in this problem as this will be taken up later.

38. SYMBOLS

For each of these units, we have just learned, we have a symbol or abbreviation which we use in writing them in problems or specifications on the job. These symbols are very easily learned and remembered with a little practice in using them, and will save a great amount of time for the practical electrician, the same as our abbreviations for other commonly used terms, such as lb., oz., ft., in., qt., Jan., Feb., Mar., etc.

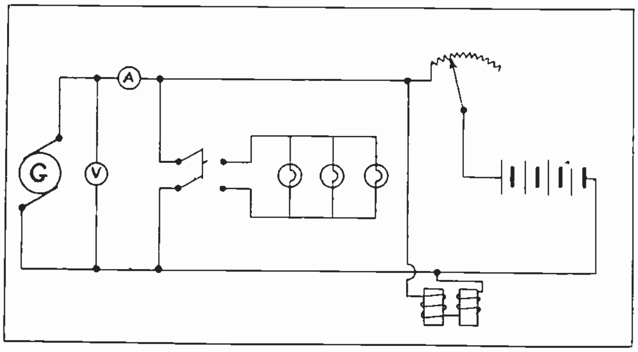

Fig. 6. This diagram shows the use of some of the symbols given in Fig. 5B. How many can you recognize?

To make it more convenient to remember the names of these important electrical units and their symbols and also easy to refer to them for reminders, we have arranged them all together in the following group.

Read them over several times to help fix them in your memory;

Symbols	Units	Use
Q	Coulomb	Unit of electrical quantity.
I	Ampere	Unit of current flow.
E	Volt	Unit of electrical pressure.
R	Ohm	Unit of electrical resistance.
G	Mho	Unit of electrical conductance.
W	Watt	Unit of electrical power.
KW	Kilowatt	Larger unit of electrical power.
KW. HR.	Kilowatt-Hour	Unit of electrical power for a given time or unit of electrical work.
H. P.	Horsepower	Unit of mechanical power.

746 W. equals 1 H. P.
1 KW. equals 1.34 H. P.

A few other common symbols used to represent electrical devices in circuit diagrams, are shown in Figure 5-B, so you will be able to recognize and understand them in the sketches used from now on.

The units and symbols covered in this section may seem somewhat dry at first, and are probably less interesting than the work on machinery will be. Remember, however, you will understand the machines much better if you know these few practical units and symbols well.

ELEMENTARY ELECTRICITY

SECTION FOUR

OHMS LAW

Ohms Law is one of the most important laws of electricity that the practical man can know, and yet it is very simple. This law is named after a German scientist, George Ohm, who in his experiments discovered the definite relation between **pressure, current,** and **resistance** in electrical circuits, and put it in the form of a simple statement or rule.

When you obtain a thorough understanding of Ohms Law, it will be much easier to understand the operation of all electrical machines, and circuits.

You have already learned that in order to use electricity in any way we must have circuits, to carry it from the generators to the machines or devices, and also through the devices themselves.

In every live electrical circuit there are always present the above mentioned three factors, pressure, current and resistance. All circuits have some resistance, and therefore, to cause current to flow through them we must have pressure or electromotive-force.

38-A. EXPLANATION AND APPLICATION OF OHMS LAW

According to Ohms Law **the current in any D. C. circuit is always directly proportional to the pressure, and inversely proportional to the resistance.**

The first part of this rule means that if we increase or decrease the voltage or pressure applied, the current will increase or decrease the same amount, if the resistance remains constant.

For example if 100 volts will force 10 amperes through the resistance of a certain circuit, 200 volts would send 20 amperes through it, or 50 volts, 5 amperes, etc.

The second part of the law means that if we increase the resistance of a circuit, the current decreases, or if we decrease the resistance the current will increase, if the voltage remains constant. Thus the term "inverse proportion."

For example, if we have a current of 10 amperes flowing through a circuit of 30 ohms resistance, and change the resistance to 60 ohms, then 5 amperes will flow. Or if we change the resistance to 15 ohms, 20 amperes will flow.

39. CONTROL OF ELECTRICITY

The above shows us how to obtain any desired current for a certain device or work, by regulating the voltage of our generators, or the resistance of the windings of the device.

And on this law or principle are based the majority of ordinary electrical calculations made by the practical man, so it is well worth a little reviewing to get it thoroughly understood.

If we compare Ohms Law for electricity with the principles of water flow in pipes, and use just common reasoning with it, as we do with other things we are more familiar with, it should be easily understood. (See Fig. 1.)

Here we have a pump driven by an engine, and producing pressure which causes the water to flow. The friction of the water moving through the pipe, and the smaller section of pipe (A), and partly closed valve (B), all offer resistance or opposition to the flow of water. And the more we increase this resistance by reducing the size of the pipe or valve opening, the less water will flow. But if we increase the pressure supplied by the pump, then more water will flow.

Electrical circuits operate similarly. (See Fig. 2.)

Here we have a generator driven by an engine, and producing electrical pressure or voltage which causes the current to flow. The resistance of the wires, the rheostat and lamp, all tend to oppose the flow of current, and if we use smaller wires or a higher resistance lamp the current will decrease. But if we speed up the generator and increase its voltage the current would increase.

The voltmeter (V) and ammeter (A), in the electrical circuit measure and show the pressure and the current in volts and amperes, just as the pressure gauge and flow meter in the water circuit measure the pressure in pounds, and the flow in gallons per minute.

40. CONVENIENT SIZE OF ELECTRIC UNITS

Another very interesting fact is that **one volt pressure is just exactly enough to cause one ampere of current to flow through one ohm of resistance.**

This of course is not accidental, but is the way those who developed these standard units made them of convenient relative sizes. This greatly simplifies all electrical work and calculations.

For example if one volt will force one ampere through one ohm, then it is easy to see that two volts would force two amperes through the same resistance of one ohm. Or ½ volt would only force ½ ampere to flow through one ohm.

If one volt will force one ampere through one ohm, then if we increase the resistance to two ohms a volt could only force ½ ampere to flow. If we reduce

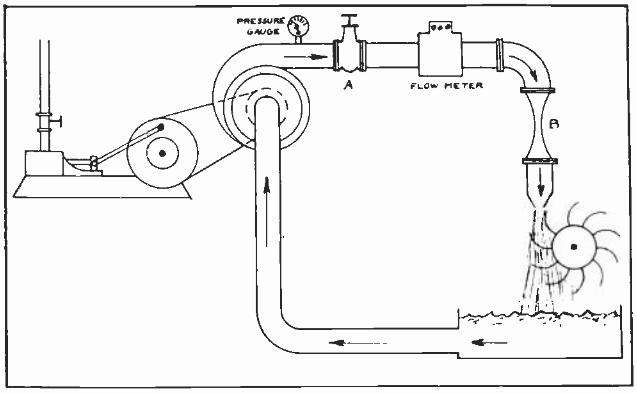

Fig. 1. The amount of water flow in this system can be increased by increasing the pump pressure. But it will decrease if we increase the opposition of the valve, or small section of pipe.

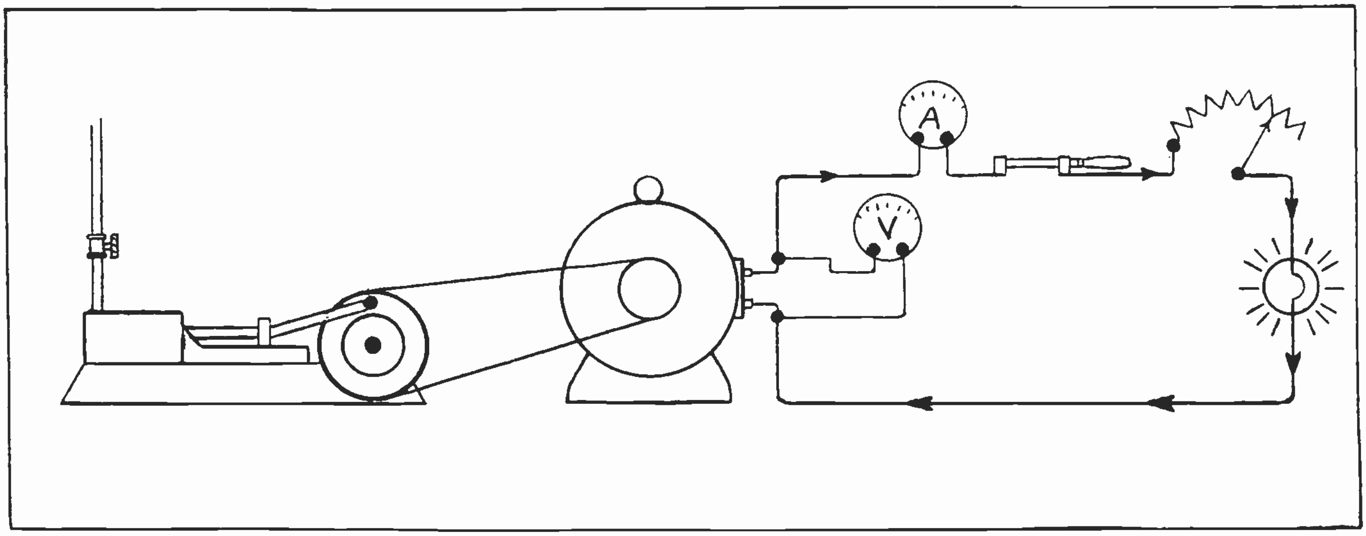

Fig. 2. The electric current flow in this circuit will be increased if we increase the generator voltage, or decreased if we increase the resistance of the wires, rheostat, or lamp.

the resistance to ½ ohm, the one volt could force two amperes to flow.

41. OHMS LAW FORMULAS

From this simple relationship between the size of these units and the discovery of the effect of pressure and resistance, we obtain the following formulas called **Ohms Law Formulas.**

$$I = \frac{E}{R}, \qquad E = I \times R, \qquad R = \frac{E}{I}$$

In which:

I=current in amperes.
E=pressure in volts.
R=resistance in ohms.

These are simply little abbreviated sets of instructions which tell us exactly how to proceed with certain electrical problems.

Remember that when any two factors are placed one above the other and a line between, it means to divide the upper one by the lower.

For example suppose you have to find the amount of current that would flow through a lamp of 5 ohms resistance when a pressure of ten volts is applied to it. (See Fig. 3.)

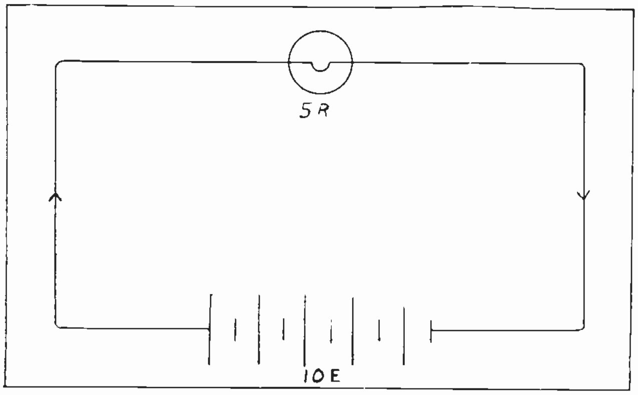

Fig. 3. Ten volt battery supplying current to a 5 ohm lamp. Can you find how much current would flow, without an ammeter?

If you have an ammeter handy to connect in the circuit you can measure this current. But if no ammeter is available you can calculate the current in even less time, by the use of the first formula.

$$I = \frac{E}{R}, \text{ or } I = \frac{10}{5} \text{ or 2 amperes.}$$

This would apply equally well to a motor or device of higher resistance and on higher voltage circuits. Whenever you know the voltage applied and the resistance of a device, you can quickly determine the amount of current that will flow through it.

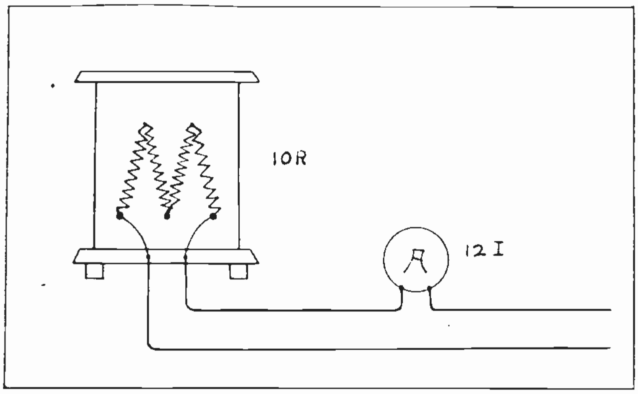

Fig. 4. Electric heater of 10 ohms resistance draws 12 amperes. Can you tell the voltage of the line?

Then suppose you were told that a certain electric heater, as in Fig. 4, had a resistance of 10 ohms and required 12 amperes to operate it. What voltage should this device be operated on? This can be determined by the use of the 2nd formula, E=I×R, or E=12×10 or 120 volts.

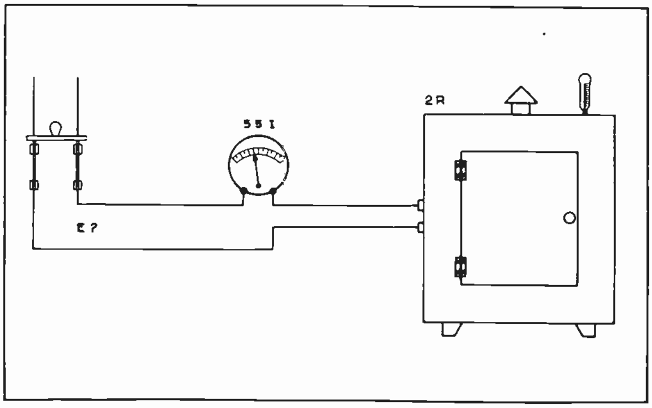

Fig. 5. The ammeter shows 55 amperes flowing through an oven of 2 ohms resistance. Ohms Law formula makes it easy to determine the voltage of the line.

Or in another case, you have an electric oven operating as in Fig. 5, and its resistance is known to be 2 ohms. An ammeter in its circuit shows that a current of 55 amperes is flowing. But you have no voltmeter. The voltage of this circuit can be determined by the same formula as used in the heater, E=I×R, or E=55×2 or 110 volts.

Now let us say you have a powerful electro magnet operating as in Fig. 6. A voltmeter shows 80 volts applied to it, and an ammeter shows 20 amperes flowing. How could you determine the resistance of the magnet coils? The 3rd formula shows exactly how to do this, as it says resistance can be found by dividing the volts by amperes, or

$$R = \frac{E}{I} \text{ or } R = \frac{80}{20} \text{ or 4 ohms}$$

resistance in the coils.

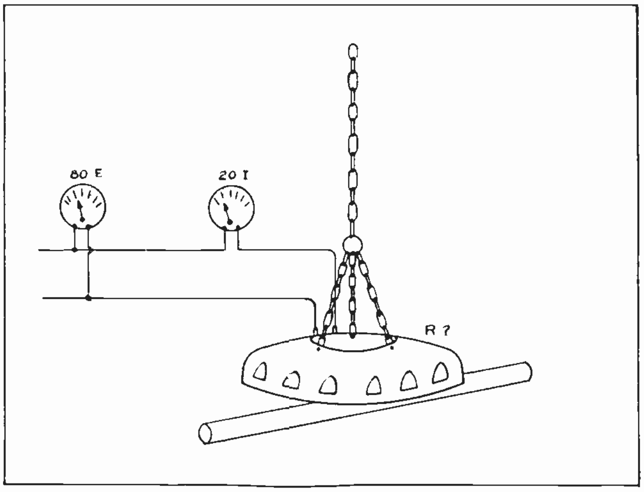

Fig. 6. Electro-magnet and meters, showing voltage and current supplied to operate it.

So we see that whenever we know any two of the three factors of any electrical circuit, we can easily determine the other one, even without instruments, by the use of these simple formulas.

42. SIMPLIFIED OHMS LAW FORMULA

A very simple way to remember all three of these formulas in one is shown by the following figure:

$$\frac{E}{I \times R}$$

All that is necessary is to cover the one you wish to find and the remaining 2 factors show you what to do, if you know their values. For example if you know the current and resistance of a circuit and wish to find the voltage, cover E and the parts still shown indicate to multiply $I \times R$. Or if you know the voltage and resistance and wish to find the current, cover I and do as indicated by the remaining two or divide E by R.

WATTS LAW

43. We also need a law and formula to calculate the amount of power of electrical circuits or devices.

You will recall that the watt is the unit of electrical power.

To produce power we must have current flowing under pressure. **And one ampere flowing under a pressure of one volt, will produce one watt of power.**

From this relationship we get Watts Law or, the **power in watts in any D. C. circuit is equal to the pressure in volts multiplied by the current in amperes.**

And from this law we obtain the very useful formulas:

$$I \times E = W$$
$$W \div E = I$$
$$W \div I = E$$

In which:—

I=current in amperes.
E=pressure in volts.
W=power in watts.

So if we want to determine the amount of power used in a circuit in which we know the current and pressure, we simply use the first formula.

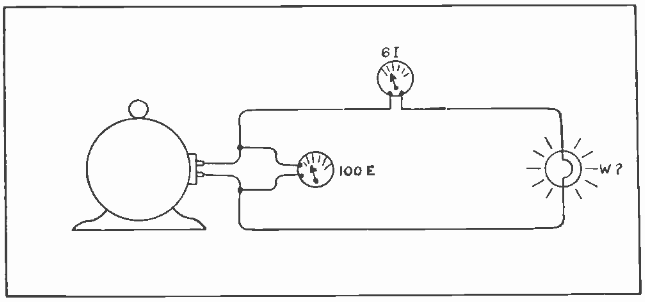

Fig. 7. How many watts does the lamp in this circuit use, according to the simple rule on this page?

In Fig. 7 we have a generator producing 100 E and supplying current to a lamp. An ammeter in the circuit shows a current flow of 6 amperes. Find the power used by the lamp.

$I \times E = W$, or $6 \times 100 = 600$ watts.

Many electrical devices have their rated power in watts and their operating voltage marked on them.

And in such cases if you wish to determine the current such a device will use, apply the second formula.

$$W \div E = I.$$

44. FIELD PROBLEMS

Suppose on some future job you have a case as in Fig. 8. Your generator supplies 200 volts to a 4000 watt machine. How much current will the machine use, or what should an ammeter read, if connected in this circuit?

$W \div E = I$, or $4000 \div 200 = 20$ amperes.

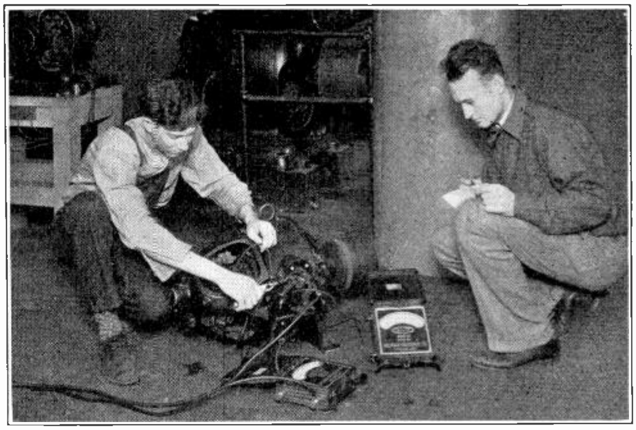

Fig. 8. Using meters right on the job to test a motor. When you know the rating of a machine in volts and amperes, it is easy to determine with meters whether the machine is properly loaded or not.

The next day you have another problem as in Fig. 9. You have a special lamp of 600 watts, and an ammeter in its circuit shows the lamp is using 5 amperes. What is the voltage of the circuit to which the lamp is connected?

Here we use the third formula.

$W \div I = E$, or $600 \div 5 = 120$ volts.

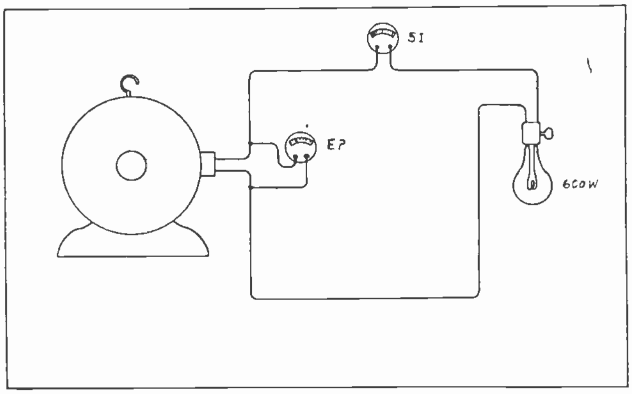

Fig. 9. Generator supplying 5 amps to a 600 watt lamp. What is the generator voltage?

The three watts law formulas can also be simplified for use in the following manner:

$$\frac{W}{I \times E}$$

Then by covering the one you wish to find the value of, the remaining ones indicate what to do.

There are also two other very convenient formulas for finding the power in watts, when we do not know both the amperes and volts, but may know either the amperes and ohms, or the volts and ohms of the circuit or device. They are as follows:

$$I^2 \times R = W$$
$$E^2 \div R = W$$

In which:—

I^2 equals amperes squared, or multiplied by itself.
E^2 equals volts squared, or multiplied by itself.
R equals resistance in ohms.

In the first case if we have a circuit of 5 ohms resistance and in which a current of 10 amperes is flowing, we square the current first and then multiply by resistance, or $10 \times 10 = 100$, and $100 \times 5 = 500$ watts.

Or if in another circuit you found a device of 20 ohms resistance connected to a line of 200 volts. You could very easily find its power in watts by using the formula $E^2 \div R = W$, or $200 \times 200 = 40{,}000$, and $40{,}000 \div 20 = 2000$ W or 2 KW.

To prove that all three of the formulas for finding power in watts are always dependable, try them all on the same circuit, where current pressure and resistance are all known.

In Fig. 10, a generator of 440 volts supplies 22 amperes of current to a device of 20 ohms resistance.

Using the first formula, or $I \times E = W$, we find that $I \times E$ is 22×440 or 9680 watts.

Using the second formula or $I^2 \times R = W$, we find that $I^2 \times R$ is $22 \times 22 \times 20$ or 9680 watts.

Using the third formula or $E^2 \div R = W$, we find that $E^2 \div R = \frac{440 \times 440}{20}$ or 9680 watts.

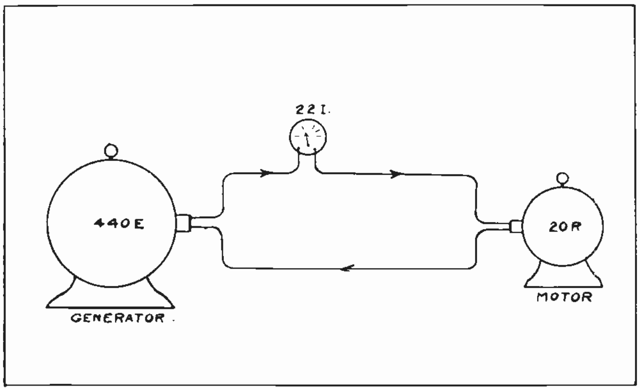

Fig. 10. 440 volt motor supplying 22 amperes to a device of 20 ohms resistance. Check all three of watts law formulas carefully on this circuit.

So we see that we can depend on any one of these formulas that is most convenient to use for any problem.

You are not expected to memorize all these formulas at once. But practice using them frequently, on every practical electrical problem you can find, and soon they will be easy to use and remember.

45. LINE DROP

In electrical work we often hear the term **Line Drop** used. This refers to the voltage used or required, just to force the current load through the line resistance alone. And it becomes a very important item to consider on long transmission lines, or feeders of considerable length to lights and motors. If we have too much voltage drop in the line, we of course will not get enough pressure at the device operating at the end of the line.

The line drop in volts is proportional to the load carried, in amperes, and to the resistance of the wires, or

$$Ed. = I \times R.$$

In which:—

Ed. equals line drop in volts.
I equals current in amperes, flowing through line.
R equals line resistance.

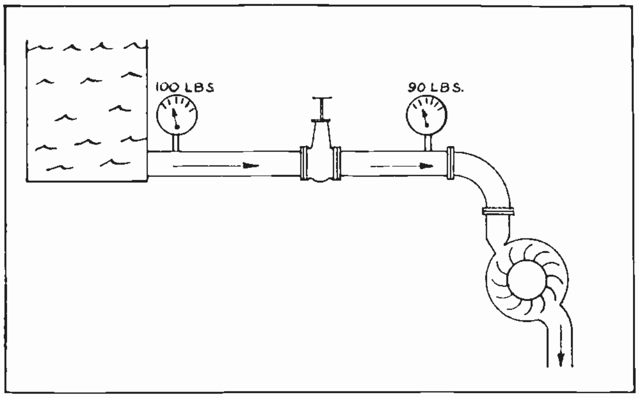

Fig. 11. Water pressure tank and pipe line to water turbine. Note drop in pressure in the pipe line, by readings of the two gauges.

In Fig. 11, we have a water pressure tank, and pipe line. While the water is flowing through the pipe, it creates friction or resistance. Some pressure is required to overcome this resistance in the pipe and maintain a given flow.

The gauge on the pipe near the tank, shows 100 lbs. pressure, but the one at the end of the pipe only shows 90 lbs. pressure. So 10 lbs. pressure was used to force the water through the pipe resistance, and 90 lbs. used to force it through the water wheel.

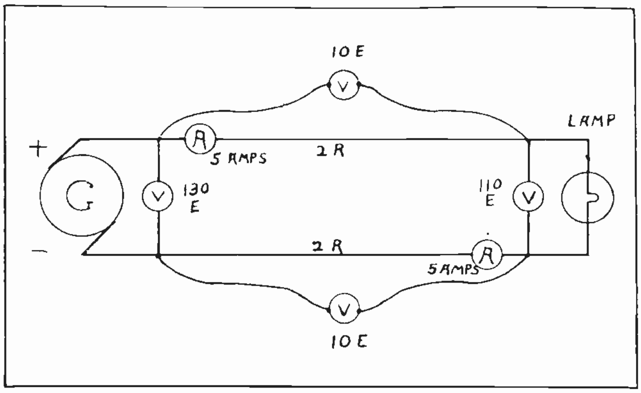

Fig. 12. Generator, lamp and meters connected for testing "voltage drop" and proving Ohms Law Formulas. This is typical of problems encountered by the head electrician in the field.

In Fig. 12, is shown a generator producing 130 volts pressure, and sending current of 5 amperes over a line of 4 ohms total resistance, to a lamp which requires 5 amperes at 110 volts to operate it.

You will note there is a difference of 20 volts between the reading of the voltmeter at the generator and the one at the lamp. This shows a line drop of 20 volts.

An ammeter near the generator shows five amperes flow to the lamp, and one at the lamp shows 5 amperes flow from the lamp back to the generator.

So if there are 5 amperes flowing through each side of the line, and each line wire is 2 ohms resistance, then by using the formula $I \times R = Ed$, we have 5×2 or 10 volts drop in each wire, or 20 volts total line drop.

Voltmeters connected as at (A) and (B) would each show 10 volts drop.

So in this case we have 20 volts used to force the 5 amperes of load current through the line resistance, and 110 volts used to force the current through the lamp resistance. Or a total of 130 volts required at the generator.

46. LINE LOSS

This term refers to the power consumed by the line, and which goes into heat along the line. It is usually expressed in watts.

This is found with our regular Watts Law formulas, but using only the voltage drop in the line itself, to multiply by the current.

In the problem shown in Fig. 12, the line loss is $I \times Ed = W$, or $5 \times 20 = 100$ watts.

Such problems as this are frequently encountered by the practical man when installing or inspecting wires feeding lamps or motors. And the man who knows these simple rules and formulas, is the man who is most valuable to his employer, and bound to advance most rapidly to the better jobs and salaries.

ELEMENTARY ELECTRICITY

SECTION FIVE

SERIES AND PARALLEL CIRCUITS

As we have already learned, in order to use electricity in any device, we must have a complete path or circuit for the current to flow from the generator or source of supply, to the device, through it, and back again to the source.

We call this a complete electrical circuit.

Where two or more devices are connected to the same line or source of supply, there are different methods of connecting them. They can be arranged to form a **Series** circuit or a **Parallel** circuit, or in a combination of series and parallel.

If you understand series and parallel circuits, it will be easy to understand most any combination of circuits.

47. A SERIES CIRCUIT IS ONE IN WHICH THE CURRENT HAS ONLY ONE PATH

(See Fig. 1). Here is shown a generator and 4 lamps connected in series. The devices are conneced one after the other along the wire or line, and the same current must pass through them all. So the current will be the same in all parts of a series circuit. This current is of course governed by the total resistance of all the devices in the circuit, as well as the voltage applied.

Suppose you wish to find the total resistance in a series circuit such as Fig. 1. It is very simple. **To find the total resistance of a series circuit, add the resistances of all the devices in the circuit.**

In the case of Fig. 1, where there are 4 lamps of 40 ohms each, the total is 160 ohms.

So we can easily see that the greater number of lamps or devices we put in a series circuit, the greater the total resistance becomes, and the higher the voltage which will be required to force a given current through it.

Or if we do not increase the voltage, the current will decrease for every additional lamp or device that is added, because each one tends to make the circuit or path longer, and resistance higher.

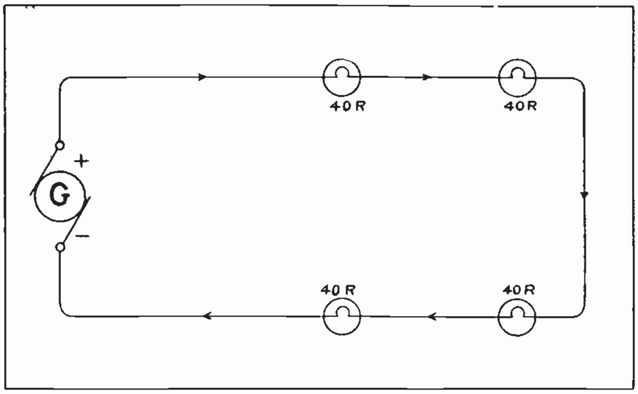

Fig. 1. Four lamps connected in series to a generator. Total resistance of lamp circuit 160 ohms.

48. APPLICATIONS OF SERIES CIRCUITS

Series circuits are often used for street lighting, and such applications where a number of lamps or devices of the same current requirements, are operated a considerable distance apart, and away from the source of supply.

This effects quite a saving in copper and line costs, as the total current flow is only that of any one device. Thus the wires can be kept smaller than with parallel circuits. And only one continuous wire is needed, instead of two to each device, as required with a parallel system. (See Fig. 2A and Fig. 2B.)

One of the disadvantages of series circuits is that we cannot conveniently control the devices separately.

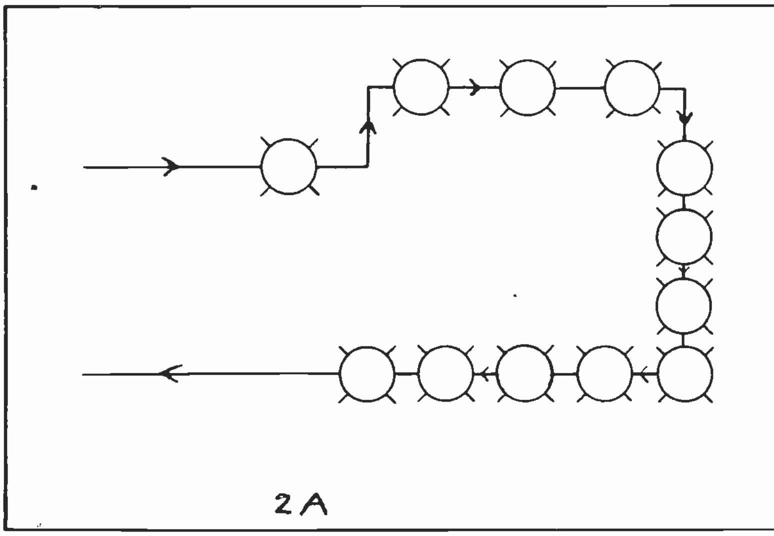

Fig. 2-A. Twelve lamps connected in series. Note that only one main wire is needed.

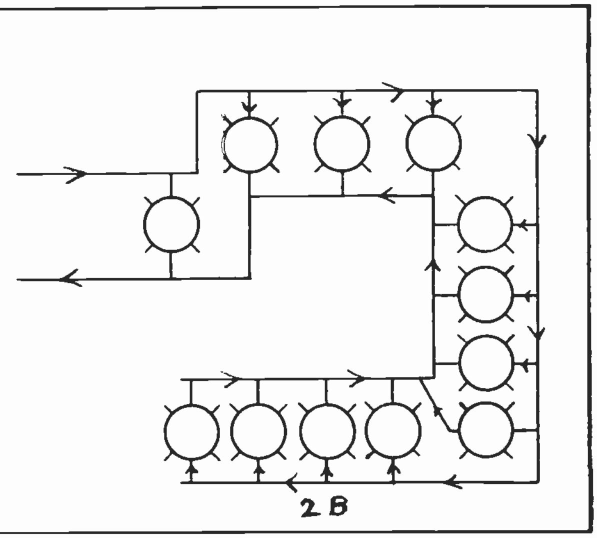

Fig. 2-B. Twelve lamps connected in parallel. Two main wires are needed for this circuit.

In a series circuit the voltage applied to any device, is the same as the voltage drop across this device. And it will be a fraction of the total line voltage, and proportional to the resistance of the device, also the total number of devices in the line. (See Fig. 3.)

A voltmeter connected across the terminals of any one of the lamps in this circuit will show 50 volts drop.

The sum of the voltages of all lamps will be that of the generator. Assuming of course that the line resistance is not enough to be considered.

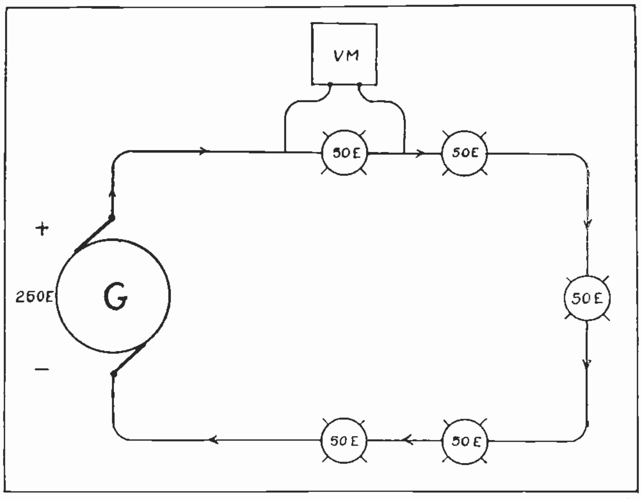

Fig. 3. Five 50 volt lamps in series. Voltmeter will show 50 volts drop through any lamp, or 250 volts total.

49. A PARALLEL CIRCUIT IS ONE IN WHICH THE CURRENT HAS TWO OR MORE PATHS THROUGH WHICH IT CAN FLOW

In such circuits the current from the generator or source divides, and part flows through each of the branches of the circuit according to their resistances. (See Fig. 4.)

Here is shown a generator and four lamps connected in parallel. Sometimes such a circuit is called a multiple circuit.

So if you hear a circuit called multiple or parallel, remember they both mean the same.

In this circuit shown, the resistance of all lamps is equal or 40 ohms each, so the current will divide equally through them. Note how the arrows show by their direction and size, the division and amounts of current in the various parts of this circuit.

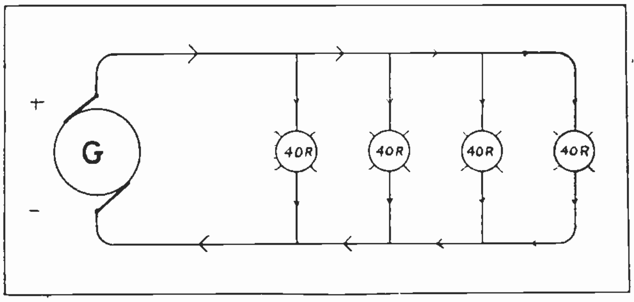

Fig. 4. Four lamps in parallel. Note how the current divides through each path.

The current tends to flow from the positive or top wire to the negative or bottom wire, through every path we give it. It is easy to see that as we connect more devices in a parallel circuit, it makes more paths or a larger total path of lower resistance, for current to flow through. So every device added in parallel causes more current to flow. If we were to connect too many devices on such a circuit, the amount of current required would be an overload on the wires or generator. It is very important therefore that we know how to calculate the total resistance of parallel circuits, so we can properly regulate the current load by having the proper resistance.

50. RESISTANCE OF PARALLEL CIRCUITS

If the total resistance of a parallel connection gets less as we add more paths, then we see we cannot get the correct total resistance of all paths, by adding their separate resistances.

To find the total resistance of a parallel circuit, where all paths are of equal resistance, we divide the resistance of one path by the number of paths.

This is a very simple method but applies only to paths of equal resistance.

To get the total resistance of the circuit in Fig. 4, we divide 40 by 4, and our answer is 10 ohms.

Suppose you have a circuit with 10 lamps of 20 ohms each, connected in parallel. What is the total resistance? The resistance of one path divided by the number of paths, or $\frac{20}{10}$ equals 2 ohms.

Many parallel circuits have devices of unequal resistance, and to find the total resistance of such a circuit we must use a different method, known as the **"Reciprocal"** or conductance method.

This method uses the reciprocal of the resistance values, which is the conductance of the path. You will recall the term conductance and its unit "Mho," explained on earlier pages.

Adding more paths or devices to a parallel circuit decreases the total resistance, but it increases the conductance. So if we find the reciprocal of the resistance, which is the conductane of each path, and add them all to get total conductance, then change this back to its reciprocal, we will have the total resistance.

The important thing to remember is that conductance and resistance are opposite, and the reciprocals of each other. As one increases in any circuit the other decreases.

To find the total resistance of a parallel circuit, with paths of unequal resistance, get the reciprocal of each resistance and add them to get their sum or the total conductance. Then take the reciprocal of this which is the total resistance.

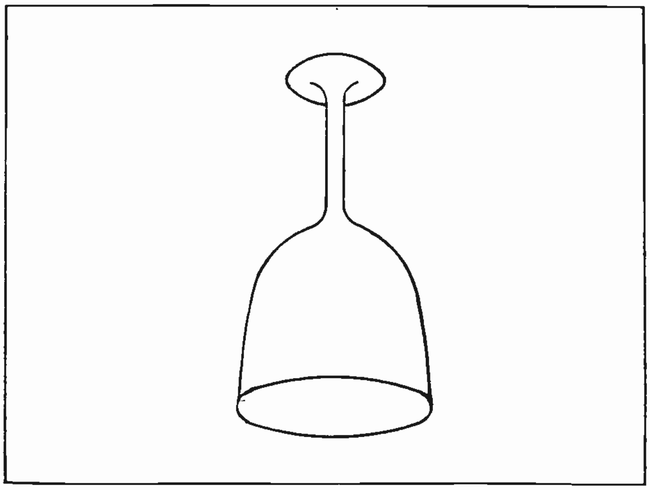

Fig. 5. What is this? Invert or turn it up-side-down and see.

When we invert a fraction we get its reciprocal.
Now it is a tumbler. Before it was a reciprocal of a tumbler, so to speak.

To find the reciprocal of any whole number we place the figure "one" above it with a line between to make a fraction. For example, the reciprocal of 2 is $\frac{1}{2}$ that of 12 is $\frac{1}{12}$ that of 25 is $\frac{1}{25}$ etc.

To find the reciprocal of a fraction, we simply invert it. For example the reciprocal of $\frac{1}{2}$ equals $\frac{2}{1}$ or 2, that of $\frac{1}{5}$ equals $\frac{5}{1}$ or 5, that of $\frac{2}{6}$ equals $\frac{6}{2}$ or 3, that of $\frac{5}{20}$ equals $\frac{20}{5}$ or 4, etc.

51.—FIELD PROBLEMS

Now suppose you have a circuit with 3 lamps in parallel as in Fig. 6.

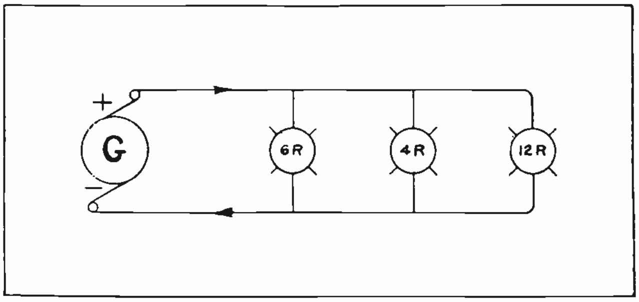

Fig. 6. Three lamps of unequal resistance, in parallel. Use the "reciprocal" method to find total resistance.

One lamp is 6 ohms, one 4 ohms, and one 12 ohms. How will you find the total resistance? According to our rule we first get the reciprocals of each resistance.

The reciprocal of 6 equals $\frac{1}{6}$

The reciprocal of 4 equals $\frac{1}{4}$

The reciprocal of 12 equals $\frac{1}{12}$

Then we add these to get the total conductance in Mhos.

Before we can add $\frac{1}{6}$, $\frac{1}{4}$, and $\frac{1}{12}$ we must get common denominators for them to make them "like fractions."* Twelve is common to all, so

$$\frac{1}{6} \text{ equals } \frac{2}{12}$$

$$\frac{1}{4} \text{ equals } \frac{3}{12}$$

$$\frac{1}{12} \text{ equals } \frac{1}{12}$$

Then $\frac{2}{12}$ plus $\frac{3}{12}$ plus $\frac{1}{12}$ equals $\frac{6}{12}$ Mho.

Then its reciprocal equals $\frac{12}{6}$ or 2 Ohms, which is the total resistance.

---

*If you wish to brush up on fractions and reciprocals, etc., you will find this covered in the mathematics section on fractions.

An interesting and valuable rule to remember, and with which to check such calculations, is that **the total resistance of any parallel group, is always lower than the lowest resistance in the group.**

Note how this proves out with the problem just finished.

This method of finding the total resistance is important enough to be worth a little practice on any problem you can find or think up, and this is one of the best ways to fix it in your memory.

In a parallel circuit having resistances as in Fig. 7. What is the total resistance?

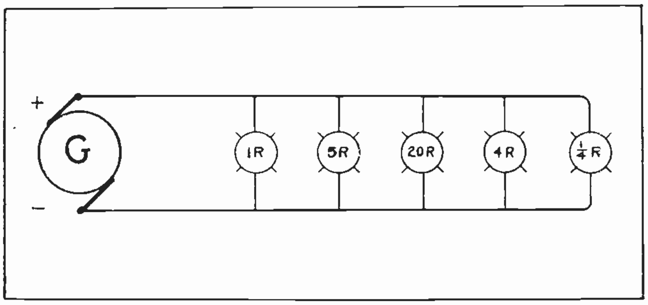

Fig. 7. Could you find the total resistance of a circuit like this, if you were asked to by your employer? See the example given.

Reciprocal of 1 equals $\frac{1}{1}$

Reciprocal of 5 equals $\frac{1}{5}$

Reciprocal of 20 equals $\frac{1}{20}$

Reciprocal of 4 equals $\frac{1}{4}$

Reciprocal of $\frac{1}{4}$ equals $\frac{4}{1}$

20 is common to all so:—

$$\frac{1}{1} \text{ equals } \frac{20}{20}$$

$$\frac{1}{5} \text{ equals } \frac{4}{20}$$

$$\frac{1}{20} \text{ equals } \frac{1}{20}$$

$$\frac{1}{4} \text{ equals } \frac{5}{20}$$

$$\frac{4}{1} \text{ equals } \frac{80}{20}$$

Then: $\frac{20}{20}$ plus $\frac{4}{20}$ plus $\frac{1}{20}$ plus $\frac{5}{20}$ plus $\frac{80}{20}$ equals $\frac{110}{20}$ Mho.

And the reciprocal of $\frac{110}{20}$ Mho equals $\frac{20}{110}$ or $\frac{2}{11}$ ohm, total resistance.

52. IMPORTANT FACTS ABOUT SERIES AND PARALLEL CIRCUITS

Advantages of parallel circuits are, that all devices receive equal voltage, or the voltage of the main wires, and any device can be controlled separately, without affecting the others. If the wires and generator are large enough, we can connect any desired number of devices in such a circuit. Lamps, motors and most electrical devices are usually connected in parallel.

The important things to remember about series and parallel circuits are the effects they produce on resistance, current, and pressure, when different devices are connected one way or the other.

We have seen that a series connection of lamps or current consuming devices, increases the resistance to the sum of all their resistances. This tends to reduce the current flow, or requires higher voltage to maintain a certain current. Series circuits also effect economy of copper or wire size in certain systems.

We have also shown how current consuming devices connected in parallel, reduce the total resistance by making the path larger in effect, and increasing the current required. Parallel circuits provide independent control and give all devices full line voltage.

53. SERIES AND PARALLEL CONNECTIONS OF GENERATORS AND BATTERIES

We have so far only considered the effects of series and parallel connections on current consuming devices. It is also very important to know the results that can be obtained by use of series and parallel connections on sources of electrical supply, such as batteries or generators.

Suppose you have a device which you want to operate with dry cells, and one cell will not furnish high enough pressure to force the required current through the resistance of the device.

By connecting cells together in series, that is positive of one to the negative of the next as in Fig. 8, the voltage may be increased to almost any desired amount.

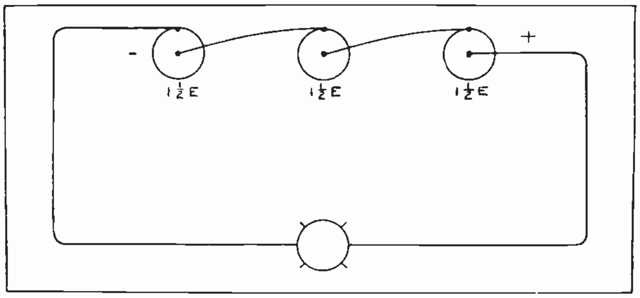

Fig. 8. Connecting dry cells in series will give the sum of their voltages at the lamp.

In Fig. 8, 3 dry cells are shown connected in series to increase the voltage they can supply. If each cell has 1½ volts, this connection will give 4½ volts.

The current that flows through the lamp must also flow through each cell because it has only one path. Therefore the current flow will not be increased, but will be just that of one cell.

Such series connections of cells are commonly used. A good example is in radio "B" batteries, where a number of very small cells are connected in series, to get up to 45 volts from one battery.

The current required from these batteries is very small, so a straight series connection can be used.

54. EFFECT OF SERIES CONNECTION ON GENERATOR VOLTAGE

Electric generators can also be connected in series to obtain higher voltages than one machine alone can produce. (See Fig 9.)

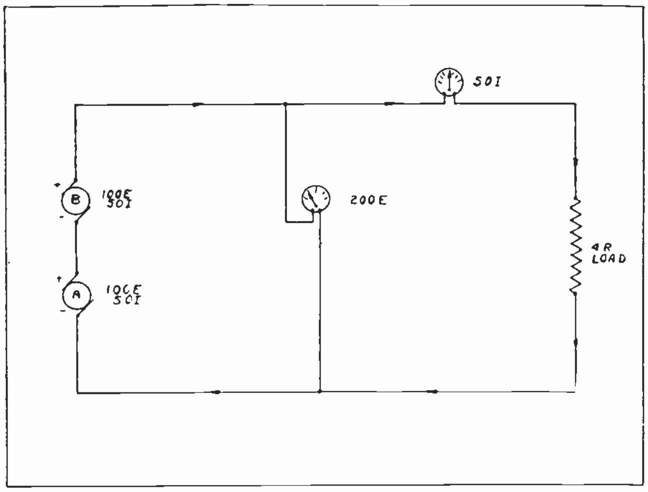

Fig.9. Two 110 volt generators connected in series. Compare carefully the readings of the voltmeter and ammeter with the generator ratings.

Here are two generators properly connected positive to negative, so their voltages add together. But the current that can be supplied by these two machines in this connection, is only the same as the capacity of one.

This circuit is easily compared and illustrated with a water system in Fig. 10.

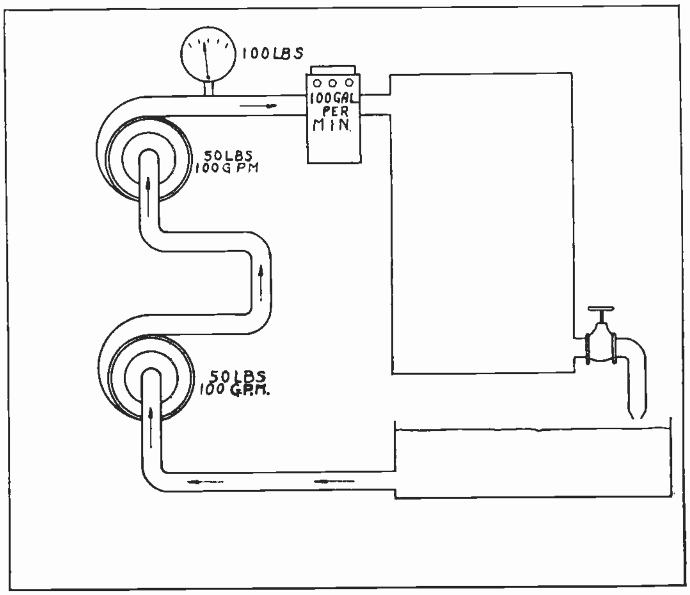

Fig. 10. Two water pumps in series, each producing 50 pounds pressure, and pumping 100 gallons per minute. The total pressure will be 100 pounds, and total flow 100 gallons per minute.

Here we have two water pumps also connected in series. They can supply double the pressure produced by one pump, as their pressures add together. But the current they supply is only the same as passes through one pump.

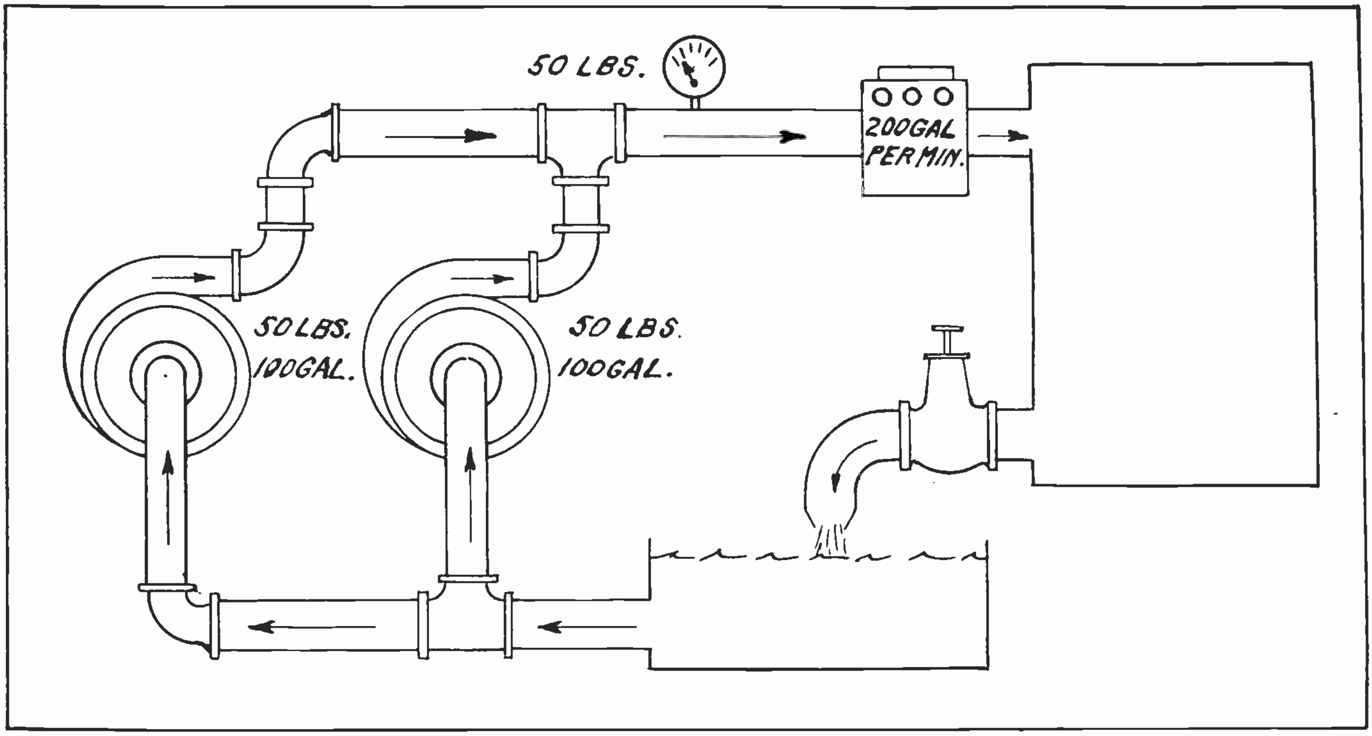

Fig. 11. Two 50 lb., 100 gal. per minute pumps operating in parallel. They develop 50 lbs. total pressure and pump 200 gallons per minute.

Now if we wish to get a greater current or volume of water at lower pressure, we can arrange the pumps as in Fig. 11. Here the pressure on the mains will be the same as that of one pump, but their current flow will add together, and be twice that of one pump.

Similarly in Fig. 12, we have two generators connected in parallel. The voltage across the main wires is only equal to that of one machine, but their currents will add, and the total current flowing will be twice that of one machine.

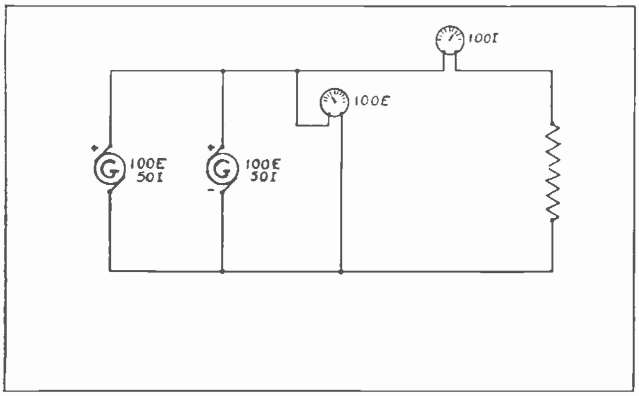

Fig. 12. Two 100 volt, 50 amp generators in parallel. The line pressure is 100 volts, and full load current is 100 amperes.

In large power plants, generators are commonly connected in this way, and we often find from 2 to 10 or more, all operating in parallel, and each supplying its share of the total load current. (See Fig. 13.)

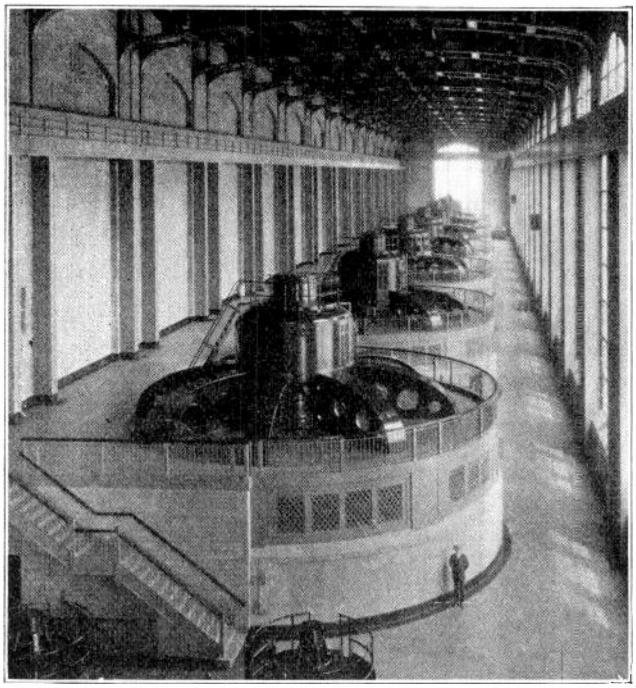

Fig. 13. Row of generators in a modern power plant. These machines are operated in parallel, each one supplying its share of the total load.

On small requirements where batteries or cells are used we can connect them in parallel to increase the current supply. (See Fig. 14.)

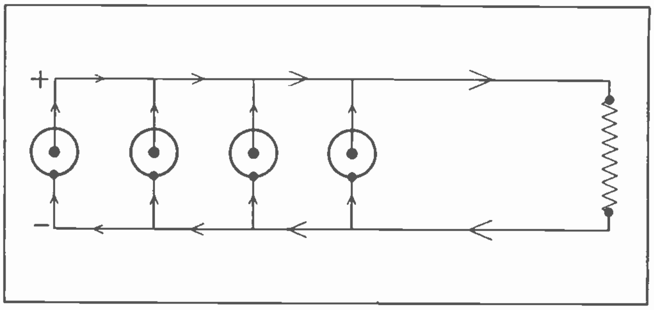

Fig. 14. Four dry cells connected parallel to obtain more current than one could supply.

Here are 4 dry cells connected in parallel, or all positives to one wire, and all negatives to the other. The voltage on the main wires will only be 1½ or the same as one cell. But the current will be the sum of that of all 4 cells.

55. COMBINATION OF SERIES AND PARALLEL CIRCUITS

If we wish to obtain both higher voltage and more current than one cell can produce, we can combine the series and parallel connections, in a **series-parallel** system as in Fig. 15.

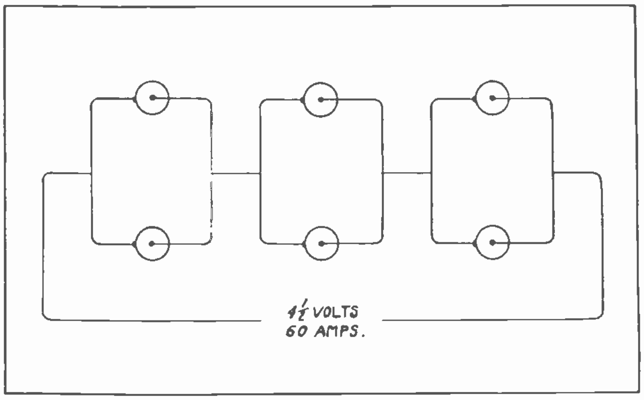

Fig. 15. Six cells connected series-parallel. Note voltage and amperage obtained by this connection.

Here are 3 groups of 2 cells each. The two cells in each group are connected in parallel to add or double their current. Then all 3 groups are connected in series to add their voltages. So at the main wires we can obtain 3 times the voltage of one cell, and twice the current.

The same effect would be obtained if they were connected **parallel-series** as in Fig. 16.

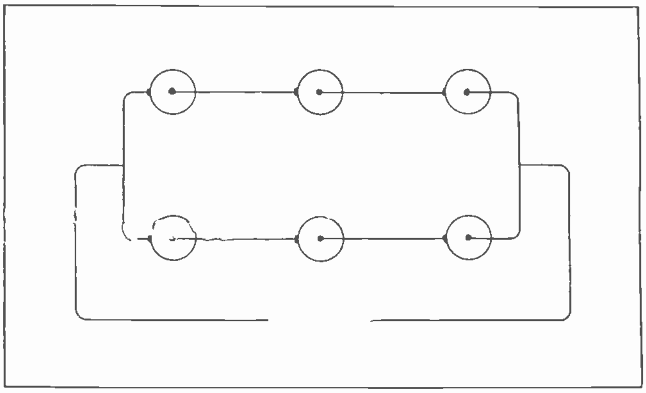

Fig. 16. Parallel-series connection of six cells.

So it makes no difference in the voltage obtained, whether we connect cells in **series-parallel or parallel-series,** as long as we keep the same number in series and the same number in parallel.

There is often some argument as to whether a certain circuit should be called **series-parallel,** or **parallel-series.**

This is easy to determine if you just call the name of the external or main wires first, or note what kind of a connection is made **Of** the groups. Note the emphasis on the word **Of.**

Thus in Fig. 15 we say we have a series connection **Of** parallel groups, or series-parallel. In Fig. 16 we have a parallel connection **Of** series groups, or parallel-series.

In connecting such combination circuits we should see that all groups are equal. Do not connect a group of 2 cells in series with a group of 4. And do not connect a series group of 3 cells in parallel with a group of 6. Their voltages would be unequal, and the group of six would discharge through the 3, even with no load attached to the main wires. (See Fig. 17.)

A general rule is, when we wish to obtain high pressures and moderate current, we connect batteries or generators in series. And when we need large amounts of current at moderate voltage, we connect them in parallel.

This is one of the most important rules to remember about series and parallel connections.

As you progress into the later sections on electric systems and machines you will more fully appreciate the importance of this knowledge of series and parallel circuits. You will also find it much easier to make certain installations, and locate troubles in your future work in the field, now that you know these principles.

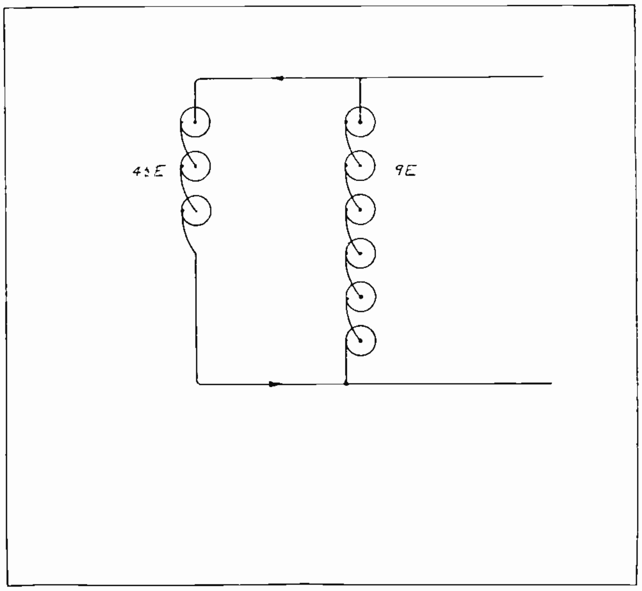

Fig. 17. Wrong connection of unequal numbers of cells in parallel-series. This connection would discharge the cells, even without any load connected.

COYNE
Electrical School
CHICAGO ~~ ILLINOIS
ESTABLISHED 1899

ELEMENTARY ELECTRICITY

Sections
Six, Seven, Eight
and Nine

ELEMENTARY ELECTRICITY

SECTION SIX

ELECTRIC CELLS AND BATTERIES

56. **Electric batteries** are commonly used to supply current in small amounts, and particularly to portable equipment.

It is cheaper to produce electricity from large generators in power plants than from batteries. But where no generators or power lines are available, and where only very small amounts of power are needed for small or portable devices, the convenience of electric batteries offsets their higher cost of current.

There are many millions of them in use in automobiles, electric trucks, radios, airplanes, electric lanterns, flashlights, and in telephone, burglar alarm and signal systems. In some power plants big groups of large batteries are used for emergency service, in case of shut down of the generators, and in such cases they may supply thousands of amperes for short periods.

The term **"Battery"** applies to 2 or more cells grouped together in series or parallel. As you have already learned such a group will supply more voltage or current than one cell, according to the way they are connected. But where only very small amounts of current are needed, at low voltage, one cell may be used alone, as in small flashlights or door bell systems, etc. Fig. 1 shows a large battery for telephone operation.

As we said in a previous section, batteries are devices to convert chemical energy into electrical energy, or they use the chemical method of producing dynamic electricity.

All batteries consist of some chemical solution or paste, and metal elements to be acted upon or consumed by the acid or solution.

57. PRIMARY AND SECONDARY CELLS

Batteries or cells are divided into two classes, called **"Primary"** and **"Secondary."** The **Primary**

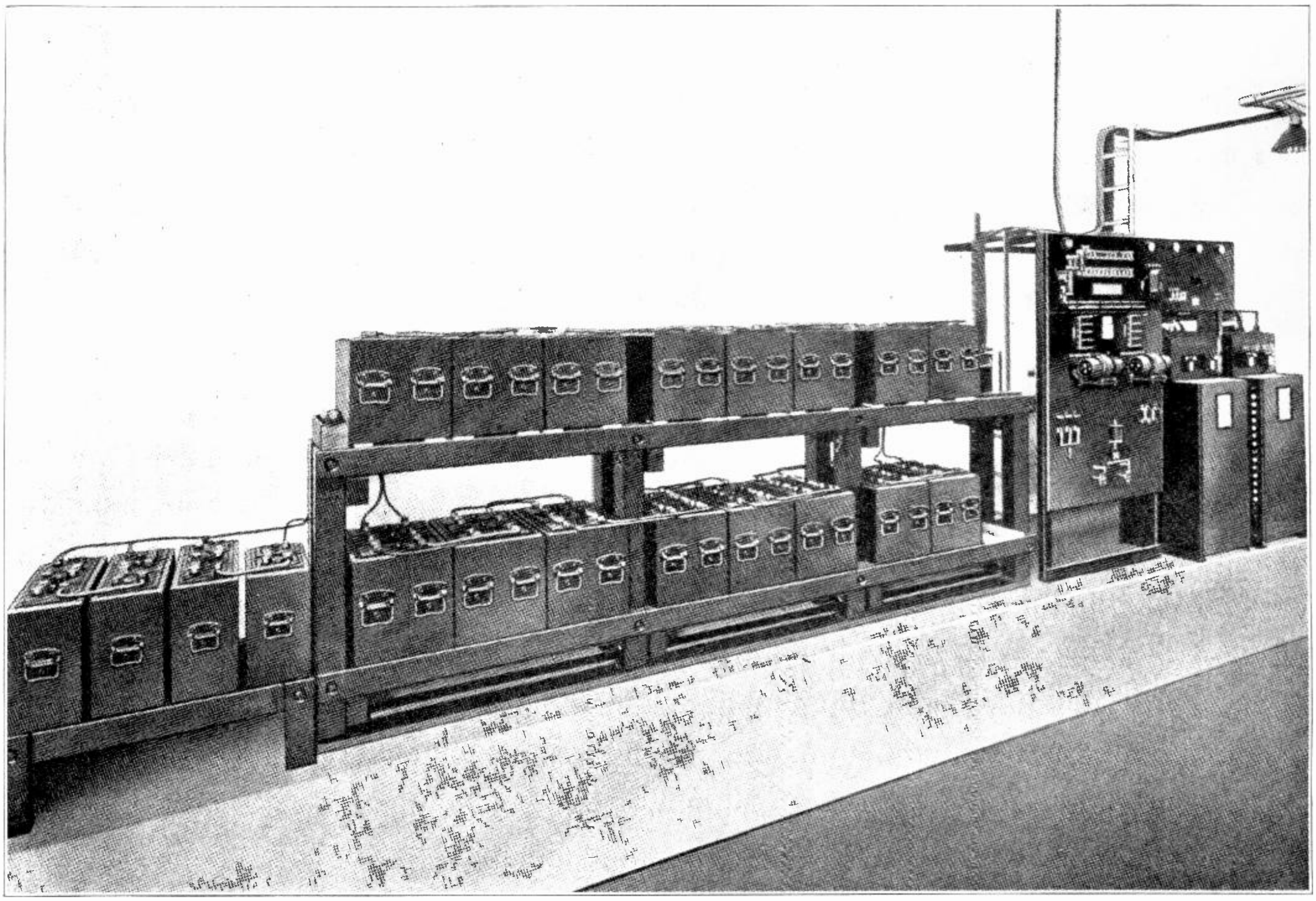

Fig. 1. Photo of group of storage batteries used for telephone work.

Cell is one that is made of such materials that it will supply electric pressure as soon as it is assembled, without first receiving any electrical charge. In these cells part of the unlike metal elements are consumed by the chemical action during their use and when the materials are used up or destroyed, they must be renewed before the cell can deliver current again.

A Secondary Cell is one that uses metal elements of similar nature when first constructed, and will not deliver current, until it has first been charged by passing electric current through it.

This charging or flow of current through the cell sets up one form of chemical action, and changes the nature of the material in the metal plates. Then when the cell is being used or discharged, a reverse chemical action is taking place.

When such a secondary cell is discharged the metal elements are not destroyed, and it can be again charged by passing current from a generator or other source, through it in the opposite direction to its flow during use. These cells can be charged and discharged many times before their metal elements need renewing. So they are often called **storage** cells or batteries. But remember they do not store electricity, instead they simply store a form of chemical energy, set up by the charging current flow.

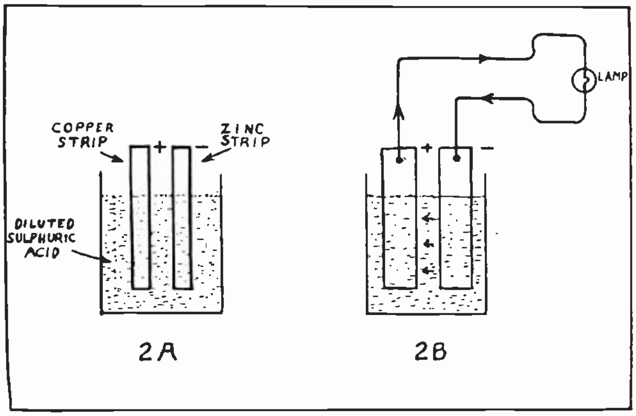

Fig. 2-A. Simple primary cell.
Fig. 2-B. Primary cell connected to a lamp. This cell has larger metal strips than the one in Fig. 2-A.

58. CONSTRUCTION OF PRIMARY CELLS

Primary cells are made of positive and negative elements of different kinds of material, immersed in the acid or chemical solution, and all in some suitable container.

The acid solution is called the **"Electrolyte."**

Cells which have the electrolyte in liquid form are called "Wet cells." Those having the electrolyte in a moist paste form are called "dry cells." These are not really dry, but because there is no loose liquid to spill, and the manner in which they are sealed, they can be placed in any position and treated as a dry cell.

A simple form of wet primary cell is shown in Fig. 2A. This is known as a "Voltaic cell."

Here we have a strip of copper and one of zinc, immersed in an electrolyte of sulphuric acid that has been diluted or weakened with water.

59. CELL VOLTAGE

The action of the acid on the zinc causes a difference of potential between it and the copper. So if we connect a voltmeter to the top ends of the copper and zinc elements, it will show a pressure of about one volt.

The amount of voltage we can obtain from a cell depends on the kind of materials used, and not on their size. Thus copper and zinc used with sulphuric acid electrolyte give about 1 volt, while carbon and zinc used with an electrolyte of ammonium chloride will give about 1.5 volts. Or carbon and zinc with sulphuric acid and a little bichromate of potassium will give about 2 volts.

If we connect a lamp to the terminals of this simple cell as in Fig. 2B, a current will flow from the positive terminal on the copper, through the lamp to the negative terminal on the zinc, and also inside the cell from the zinc through the electrolyte to the copper. This shows the complete circuit or path of current in both the external and internal parts of the circuit.

As long as the external circuit is closed and current allowed to flow, the chemical action decomposes and consumes the zinc plate. The copper, however, is not destroyed. When the zinc element is practically all destroyed, the cell will not furnish any more current and is said to be dead.

By replacing the zinc with a new piece it will again deliver the current.

In referring to the terminals and external circuit of a battery the element at which the current leaves the cell is commonly called the **positive element** or **pole,** and the one at which current enters the cell is called the **negative element** or **pole.**

Inside the cell however, the current flows from zinc to copper, so in the internal circuit the element at which current enters the electrolyte is the positive or **anode,** while the one at which current leaves the electrolyte is the negative or **cathode.**

60. CELL CURRENT AND LIFE

From the above we can see that the amount of current we can obtain from such a cell, as well as the life of the cell, will depend on the size of the elements.

The cell in Fig. 2B, having elements twice as large as in Fig, 2A, will furnish current twice as long at the same rate, or would deliver more current on a low resistance circuit than the smaller cell.

A cell such as in Fig. 2A, or 2B, is sometimes called a one fluid cell, as the electrolyte is just diluted sulphuric acid.

61. POLARIZATION

Such one fluid cells are not used much except for experimental purposes, because if we leave some device connected in the circuit to operate continuously, we find that the current flow will very rapidly decrease to almost nothing.

This is caused by what is called **Polarization.** As the acid attacks the zinc element hydrogen gas is created and has a tendency to collect on the copper plate in the form of little bubbles. If the current continues to flow at a very heavy rate, the copper plate soon becomes so coated with a layer of these bubbles that they shut off the current flow, as the gas is an insulator of very high resistance, and reduces the active area of copper in contact with the electrolyte.

When the copper is thus coated with bubbles, if it is taken out and wiped off or dried, then put back, the cell again delivers current a short time until it becomes polarized once more.

Such a cell can only be used for short periods, or on circuits that are normally open, and just closed intermittently. So they are called open circuit cells.

In primary cells we sometimes have **"Local Action"** at the zinc element, caused by impurities in its surface. The action of the acid on these particles of other metals is different than on zinc, and sets up a difference of potential, and little short circuited local currents at these spots. This consumes the zinc even when the cell is not in use. To prevent it, we sometimes amalgamate or coat the zinc with mercury.

62. CLOSED CIRCUIT CELLS, AND PREVENTION OF POLARIZATION

For many uses we need cells that will furnish current continually or at least for reasonable periods, without polarizing.

There are several ways of constructing such cells to prevent polarization. In Fig. 3, is shown a cell using two solutions for the electrolyte, copper sulphate in the bottom, and sulphuric acid and zinc sulphate in the top. These two liquids stay separate because the copper sulphate is heavier than sulphuric acid or zinc sulphate. The lighter liquid floats on the copper sulphate, as oil will float on water.

In the bottom of the jar, and immersed in the copper sulphate solution, we place the copper element which is usually several strips of thin copper fastened together in the center, and the ends spread out fanwise. From this a rubber insulated wire leads up through the solution to the top of the jar.

In the top of the jar and in the sulphuric acid solution we place a zinc element, that consists of several heavy bars cast together to a vertical stem, in the shape of a **"Crowfoot".**

The stem has a hook shaped extension at the top to hang it on the rim of the glass jar and hold it up in place, also a terminal nut for connecting wires to it.

When this cell is in operation, the acid acts on the zinc the same as in our first simple cell, and hydrogen gas is again set free. But before it can reach the copper element it must pass through the copper sulphate solution in the bottom of the jar.

When the gas reaches this solution it combines with part of the copper sulphate, forming sulphuric acid which stays in the top, and metallic copper collects on the copper element, instead of hydrogen bubbles.

Thus polarization is prevented. The copper deposited on the copper element of course does no harm as it is a conductor, instead of high resistance like the gas bubbles.

This type of cell is called a **Closed Circuit Cell** because it can be used to supply small currents continually, to closed circuit electrical systems.

They are also called **"Gravity Cells"** because of the manner in which the two solutions are kept separated by their different gravities. They are one form of **Daniel Cell** and often called by this name. Fig. 4 shows two such cells connected to telegraph instruments.

They are used for telegraph and telephone work, and in some types of signal and alarm systems.

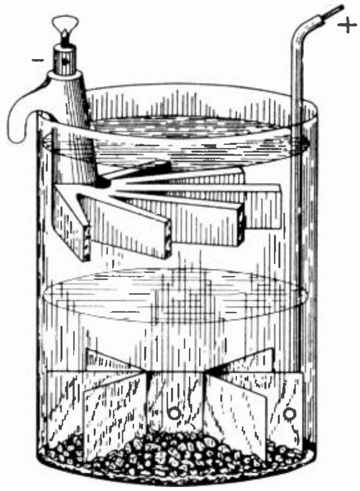

Fig. 3. "Two Fluid" Gravity Cell. These cells do not polarize as the one fluid type do.

63. ASSEMBLY AND PREPARATION OF GRAVITY CELLS

In preparing such a cell for use we place the copper element in the bottom of the jar, with its "lead in" wire brought to the top, then sprinkle the bottom of the glass jar evenly and about ½

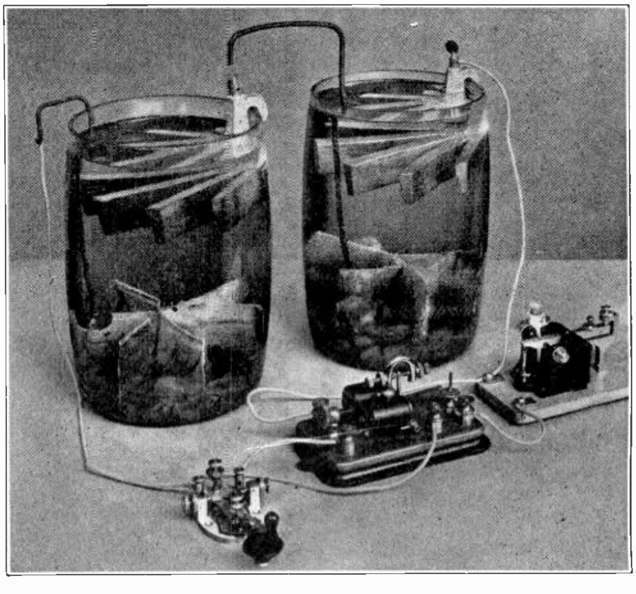

Fig.4. Photo of two gravity cells, showing their parts and construction.

inch thick with copper sulphate crystals. Then hang the zinc element in the top and fill the jar with water (preferably distilled) to within about 2 inches of the top, or well over the zinc.

If the cell is to be used at once it may be necessary to add about a tablespoon full of sulphuric acid. But if it can be allowed to stand a little while on short circuit, a chemical action takes place which soon forms enough zinc sulphate to start operation.

After quite a period of use the zinc element becomes practically destroyed and must be renewed. The electrolyte and copper sulphate crystals must also be renewed occasionally to keep the cell up to good strength.

The copper element becomes heavily coated with metallic copper from the solution, after long periods of operation.

It is well to cover the top of the electrolyte in these cells with a thin film of oil to prevent evaporation.

64. CARE OF CELLS

They should not be left on open circuit long, as they will deteriorate if no current is flowing. The acids tend to mix when the cell is idle. When standing idle and not in use in a regular circuit, it is best to connect a wire or coil of about 30 or 40 ohms resistance across them.

There is a noticeable difference in the color of the two solutions. The lower solution or copper sulphate should show a blue color when in good condition. When it shows a brown color it indicates that the zinc is deteriorating.

The line of separation of the two liquids should be about half way between the copper and zinc elements. If too low, it can be raised by adding a little copper sulphate crystals and water. If too high, a little can be siphoned out with a small rubber tube. Then short circuit the cell awhile to create more zinc sulphate.

65. PORUS CUP CELLS

Another form of primary cell, also one of the Daniel type, uses a **porous cup** or cylinder between the positive and negative elements to separate the solutions. (See Fig. 5).

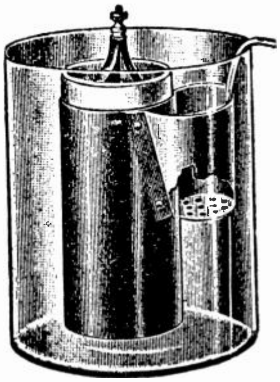

Fig. 5. Daniel Cell, in which the liquids are kept separated by a porous cup.

This cell has a porous cup to keep the two liquids separated. Inside this cup is placed a saturate solution of zinc sulphate, and the zinc electrode. Outside the cup the jar is filled with copper sulphate solution or dilute sulphuric acid, in which the copper electrode in the form of a cylinder is placed. The copper sulphate solution is kept renewed by the dissolving of copper sulphate crystals in a little perforated copper container shown in Fig. 5.

In this cell the porous cup keeps the liquids separate, and thereby prevents polarization, but does not prevent the proper chemical action, or prevent the current flow in the cell. They are better for portable use than the gravity type, as their solutions cannot mix so easily by motion or jarring.

66. EDISON PRIMARY CELL

The Edison cell is very extensively used in railway signal work, and many other places. These cells use an alkaline solution such as caustic soda or caustic potash, and a positive element of copper oxide, and negative of zinc. (See Fig. 6.) They supply a low voltage of about .7 volt, but their internal resistance is very low, and they will deliver from 1.5 to 7.5 amperes according to the size of the cell. If short circuited their current will range from 7 amperes with the small cells to 33 amperes for the largest, but this rate of course cannot be maintained long.

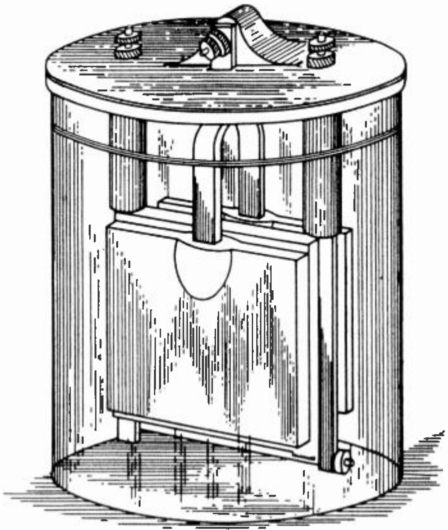

Fig. 6. Edison Primary Cell.

The negative zinc element is amalgamated throughout by adding mercury to it while it is being cast. The positive element consists of a mass of copper oxide mixed with metallic particles coated with copper, to decrease its resistance.

After considerable use the hydrogen bubbles reduce the copper oxide to metallic copper, and it must then be replaced like the zinc.

These cells are very rugged in construction and will stand quite cold weather without freezing, so they are often used for railway signal batteries, and other outdoor work.

The electrolyte should be covered with a thin layer of paraffin oil to prevent evaporation, and to stop the salts from "creeping" over the sides of the jar.

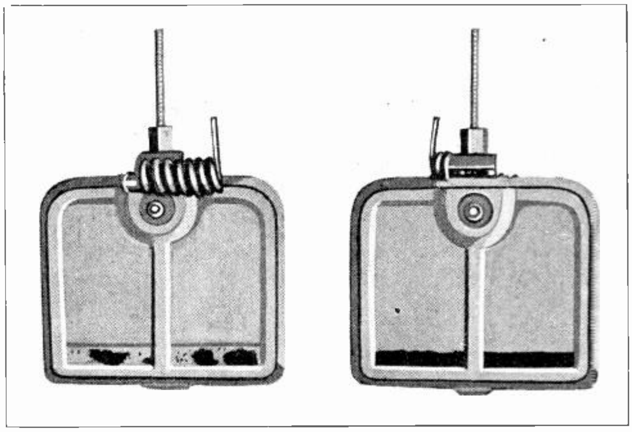

Fig. 7. Zinc elements of an Edison Primary cell, with "indicator panels" which show their condition.

The zinc plates of these cells are made with special sections or panels at the bottom edges, which become eaten away first, as the cell is used and exhausted.

This is called an **indicator panel,** and is very useful in determining when the cells should be renewed.

Fig. 7 shows two plates at different stages of exhaustion. The one at the left with the panel partly eaten away is about 85% exhausted, and the one at the right with the panels eaten out entirely is almost completely exhausted. They should be replaced at once when this condition is noted.

Fig. 8 shows the renewal parts for one of these cells. This consists of the new zinc element, a can of caustic soda, and the bottle of oil to cover the electrolyte surface. The soda and oil supplied are in just the right amounts for the one cell, and the entire contents should be used when renewing a cell.

In maintaining these cells and making renewals, clean water should be used, and the soda should be poured slowly into the water while it is being stirred constantly, with a clean wood stick or glass rod.

This caustic soda should be handled very carefully, as it will burn the flesh and destroy clothing if spilled on them.

The element should hang vertically when immersed in the solution. If the cell is to be used on open circuit work the element should be short circuited with a piece of wire before inserting it in the hot solution, and the "short" left on a couple of minutes after the element is immersed, and then remove the wire.

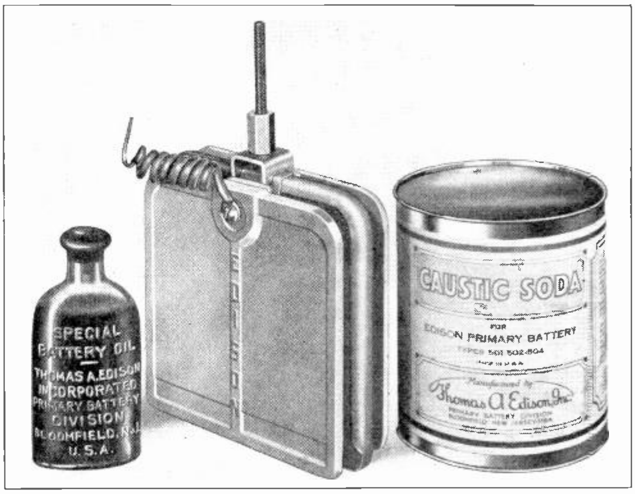

Fig. 8. Renewal parts for Edison Primary cell, consisting of zincs, caustic soda and oil.

The electrolyte should be kept up to within ¾" of the top of the jar at all times, and should always be stirred after adding water.

Fig. 9 shows a group of this type of primary cells in use in a railway signal tower.

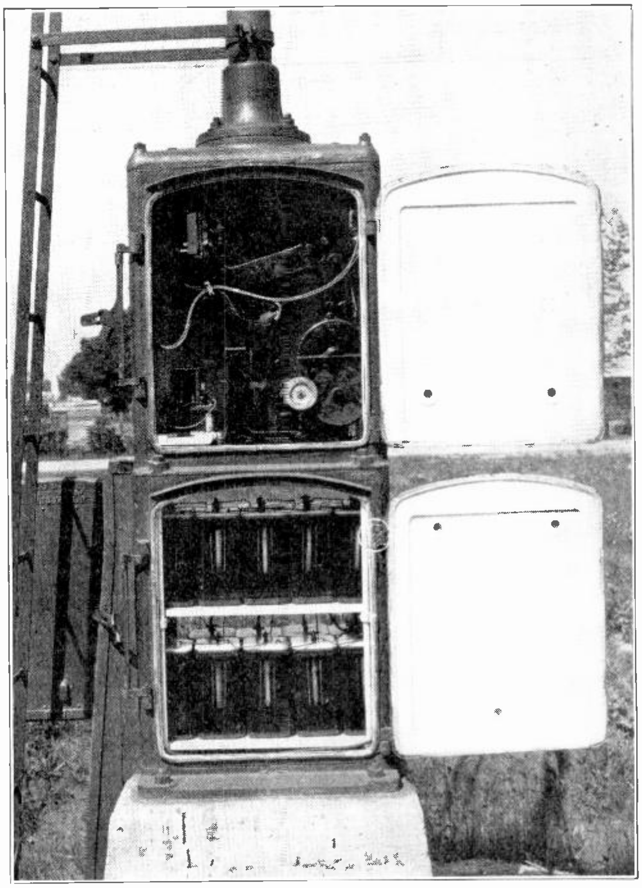

Fig. 9. Edison cells in railway signal tower.

They are located in a weather proof iron box in the lower section of the tower. Many times they are located in concrete pits or "battery wells" along the tracks.

67. DRY CELLS

Dry Cells are probably the most universally used of any type, because of their great convenience and portability.

Practically every one has seen and used them in some device or other, such as flashlights, lanterns, door bells, electric clocks, electric toys, gas engine ignition systems, rural telephones, radios, etc.

Their construction is shown in Fig. 10.

The zinc element is in the form of a cylinder and serves as the container for the rest. The other element is a carbon rod in the center, and around it is packed a pasty mass of granulated carbon and manganese dioxide, saturated with ammonium chloride (Salammoniac) as the electrolyte.

The manganese dioxide acts as a depolarizer and helps prevent the formation of hydrogen gas bubbles. Other ingredients are added by various manufacturers in their patented processes.

Between the wet mass and the zinc container there is a porous paper separator which allows the chemical action to take place, but prevents a short circuit between the carbon and zinc.

The tops of these cells are sealed with compound that makes it possible to handle or place them in any position. This compound will melt if the cell is over heated.

The whole cell is placed in a paper container to prevent the zinc from coming in contact with other metal objects, and to serve as a protector and insulator.

68. USE AND CARE OF DRY CELLS

Dry cells are designed to operate on open circuit systems, where current is only used occasionally for short periods. But they are sometimes used on closed circuit systems where only very small amounts of current are required.

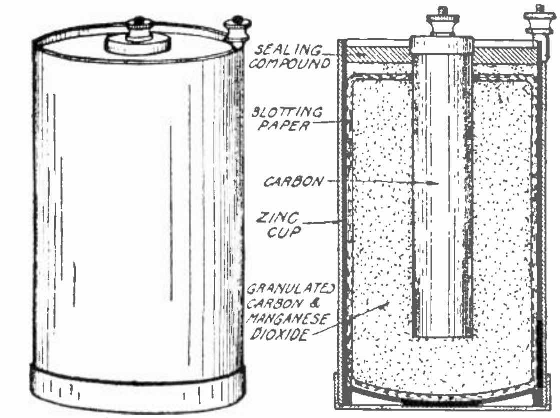

Fig. 10. Typical dry cell, with sectional view showing parts and construction.

If used on a circuit or device requiring heavy current, or if short circuited, the rate of current flow at first may be 30 amperes or more, but will fall off very rapidly. This is because their depolarizing material is not strong enough to prevent the formation of hydrogen gas at higher rates of current flow.

If a cell which has been shorted briefly or used on a heavy load, is allowed to stand a while, it will often recuperate or supply nearly normal current again, as it has been given time to break up the gas formation with its depolarizer chemical.

The life of a dry cell will be much greater if used as intended, to supply small currents for short periods with intervals of rest between.

Dry cells are made in different sizes, but perhaps the most commonly used is the number 6 size, about 2½ inches in diameter and 6 inches high. This cell when new should test 1½ volts with a battery voltameter, and 30 to 35 amperes on short circuit with a battery ammeter.

Then there are the very small sizes used in pocket flashlights, etc. As before mentioned, radio "B" batteries are a group of these little cells connected in series and sealed in a paper box.

Some dry batteries for radio and test work requiring high voltages, are built of little flat cells stacked together. These use flat plates, of zinc and carbon with a layer of the acid paste in between, for each cell. When a number of these are stacked they are more compact and eliminate a lot of connecting wires. See Fig. 11, which shows a comparison of the old type, and the new type "layer built" B batteries.

Dry cells should not be stored or located in damp places, or they will quickly deteriorate or lose their strength.

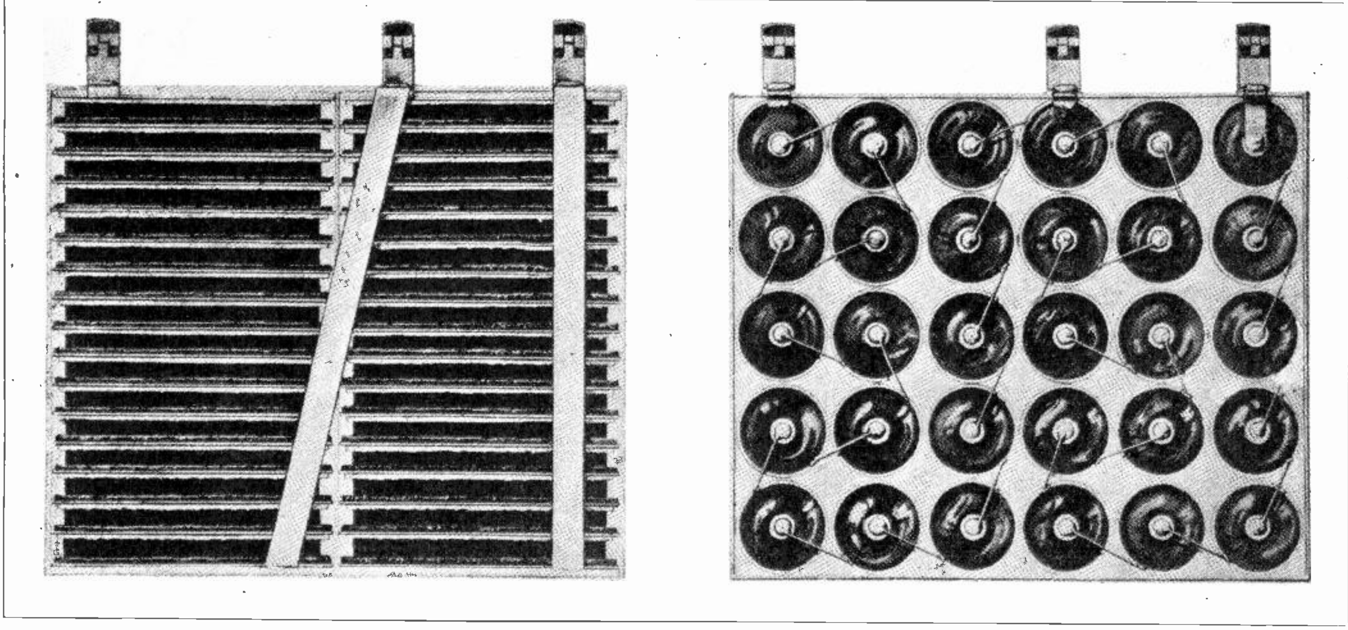

Fig. 11. Views showing inside construction of radio "B" batteries. Compare the new "layer built" type on the left, with the series grouped cells on the right.

Their tops and terminals should be kept clean of dirt and dampness, and terminals also kept tight.

The terminal nuts provided for easy connection of wires are very convenient, and are sometimes called binding posts.

69. POLARITY

The center terminal on the carbon electrode is always positive and the one on the zinc shell is negative. Current flows from positive to negative outside the cell, and from zinc or negative through the paste to carbon or positive, in the internal circuit.

These cells will often decrease in strength if stored too long in shelves before being sold, and therefore should be tested when buying.

When the paper covering of a dry cell shows damp or greasy appearing spots, or if when the paper is removed, the zinc shows bulges and holes eaten through it, this shows the cell is dead or used up, and should be replaced.

It is not practical to try to recharge dry cells, except in rare emergencies.

Dry cells can be adapted to many uses, and made to supply a wide variety of voltages or current capacity, by proper connection in series or parallel as covered in the previous section on series and parallel circuits. Fig. 12 shows a group of six dry cells connected parallel-series, and ready for use in a burglar alarm system.

In dealing with any cells it is well to remember that the copper or carbon electrode at which current leaves the cell is called the **Cathode**, and has the positive terminal attached to its top or pole. The zinc electrode at which current enters the cell from the external circuit, is called the **Anode**, and has the negative terminal attached to its top.

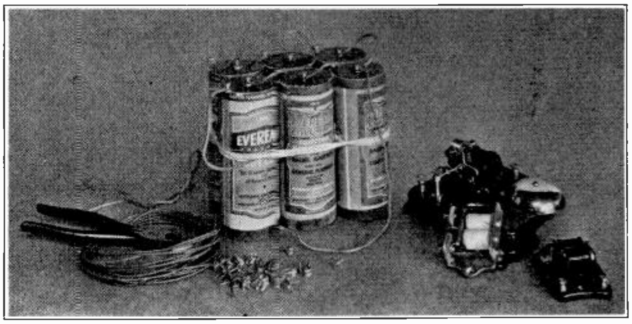

Fig. 12. Six dry cells connected parallel-series, for use in an alarm system.

The **Internal** circuit of a cell includes the electrodes and electrolyte. The **External** circuit refers to the wires and devices connected to its terminals.

The practical man will often have many uses for various types of batteries in his work, and this general knowledge of their operation and care should be of great value to him.

When you have carefully studied this material you should feel confident of your ability to install, care for, test and renew any of the common primary cells.

Remember you are not expected to memorize all of the material or data, but should use this set for reference any time necessary, when you have such problems or work ahead to do, and until practice fixes them in your mind.

This section has dealt only with various types of primary cells, as storage batteries of the lead plate and acid type, and also the nickle-iron alkaline type, will be covered thoroughly in a later section.

ELEMENTARY ELECTRICITY

SECTION SEVEN

MAGNETISM

70. **MAGNETS AND MAGNETISM** play such an important part in the operation of many electrical devices and machines, that every electrical man should have a good understanding of them.

Magnetism is also an extremely interesting subject, and you will really enjoy the following practical material.

You have probably seen magnets in use in some form or other, such as magnetic tack hammers or toy horseshoe magnets, with their mysterious power to attract tacks, nails, and other iron and steel objects.

Then there are the common magnetic compass, magnetized pocket knives and screw drivers, as well as magnets of another type in bells, buzzers, etc. But most people without electrical training do not realize that magnets form a large part of every electric motor and generator, and thousands of other devices such as telephone and radio receivers, telegraph instruments, power and telephone relays, magnetic tools, etc.

71. **NATURAL MAGNETS** were first found in Magnesia, a country in Asia Minor, about 600 B. C., and for this reason were called magnetite or magnets. (See Fig. 1.)

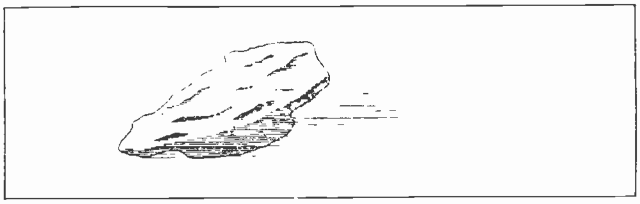

Fig. 1. Sketch of natural magnet or lodestone.

These first magnets were just lumps of iron ore or oxide, which were found to have the power of attracting small pieces of iron. Later it was also discovered that if an oblong piece of this material was suspended by a thread, it would always turn to a position with its length north and south. If moved or turned, the same end would always go back to point north. So its end which pointed north was called the North seeking or North end, and the other end the south seeking or south end. It was used in this manner as a crude compass and often called **"Lodestone,"** meaning leading stone.

Our compasses today are simply small steel needles that have been permanently and strongly magnetized, and mounted on jeweled pivots so they are free to turn easily. They are made by the thousands in many styles and sizes from the pocket variety used by hunters and explorers to keep their directions, to the big elaborate ones used to guide our steamships and airplanes.

72. EARTH'S MAGNETISM

The earth is also a natural magnet on a huge scale, with centers of magnetic force or attraction on its north and south sides. (See Fig. 2.)

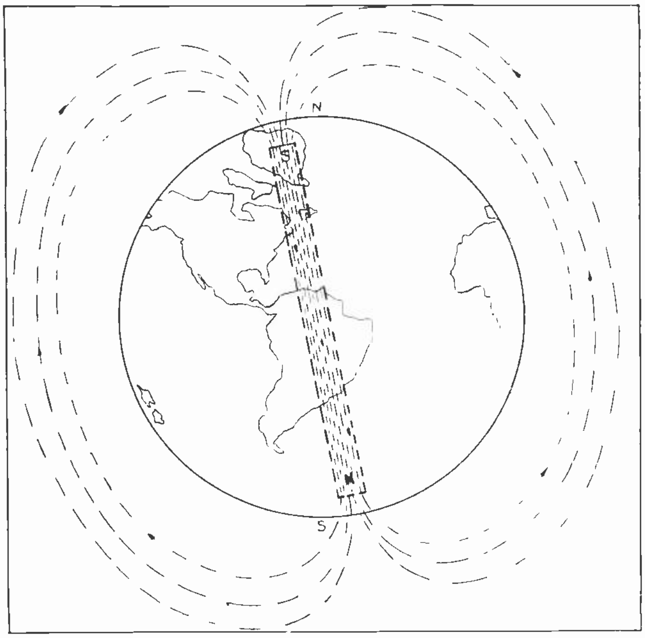

Fig. 2. Sketch showing earth's magnetic field and poles. Note that the magnetic poles do not exactly align with the geographical poles.

This is the reason for the attraction of the ends of the compass needle to a north and south position. But a compass does not point exactly true north, because the earth's magnetic centers are not exactly at its true north and south geographical poles, or ends of its axis.

In using a compass for accurate work, mariners, aviators, and surveyors allow a certain number of degrees for correction of this error, at various places on the earth.

You will note in Fig. 2, the earth's magnetic poles are opposite to its geographical poles. This will be explained later.

73. ARTIFICIAL MAGNETS are made of steel and iron, in various forms. Common types are the straight bar and horseshoe forms. (See Fig. 3A and 3B.) These are usually much more powerful than the natural magnets or lodestones.

Artificial magnets can be made by properly stroking a bar of steel with a lodestone or some other magnet, or by passing electric current through a coil around the bar. In fact we find that a piece of iron often becomes magnetized, just lying near a strong magnet. This last method is called **Induced Magnetism.**

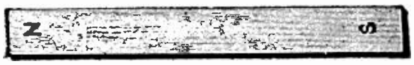

A

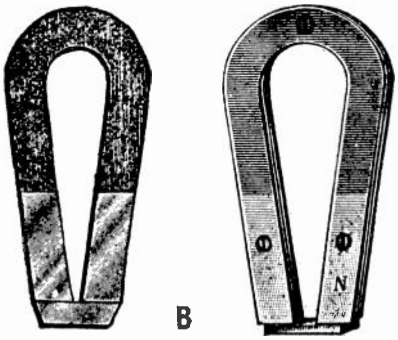

B

Fig. 3-A. Common bar magnet.
Fig. 3-B. Horseshoe magnets with "keepers" across poles.

If a small bar of soft iron is held near to, but not touching a strong magnet, as in Fig. 4, the small bar will be found to have magnetism also, and attract nails or other iron objects. But as soon as it is taken away from the permanent magnet, it will lose its charge. This is an example of induced magnetism.

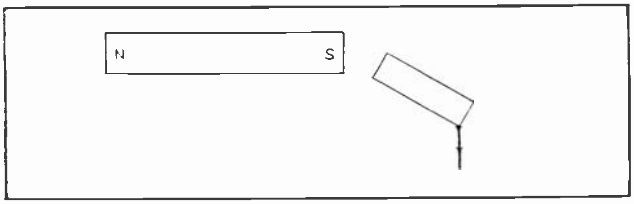

Fig. 4. The small bar of iron attracting the nails, obtains its magnetism by induction from being near the large magnet.

74. MAGNET POLES

All magnets whether natural or artificial, usually have their strongest pull or effects at their ends. These ends or points of stronger attraction are called **Poles.**

Ordinary magnets usually have at least two poles, called **north** and **south,** because of their attraction for the north and south poles of the earth.

If we dip a bar magnet in a pile of iron filings or tacks, we find it will attract them most at its ends, and not much in the middle. (See Fig. 5.)

75. ATTRACTION AND REPULSION

If we take two magnets and suspend them so they can turn freely until they come to rest with their north poles pointing north, and south poles pointing south, then we know that their ends which point north are alike, as well as the two which point south.

Now if we mark these magnets and bring the two north poles together, we find they will try to push apart, or repel each other. The two south poles will do the same if we bring them near each other. But if we bring a north pole of one magnet near the south pole of the other they will try to draw together or attract each other.

This proves one of the most important principles or rules of magnetism often called the first law of magnetism, as follows: **Like Poles Always Repel and Unlike Poles Attract Each Other.** This law should be remembered as it is the basis of operation of many electrical machines and devices.

Prove it for yourself with magnets, at your first opportunity, so you will remember it better.

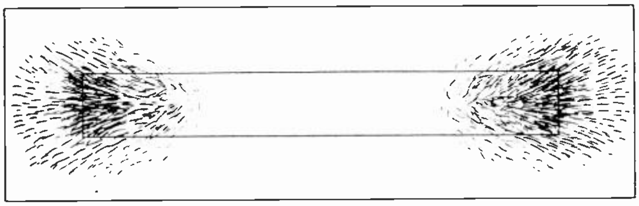

Fig. 5. Sketch of bar magnet showing how iron filings are attracted almost entirely at its ends or poles.

Refer back to Fig. 2, showing the earth's magnetic poles and you will now understand how we know that the magnetic pole in the north must be unlike the north pole of our compass, and why we assume that the earth's magnetic poles are opposite to its geographical poles.

76. LINES OF FORCE

Magnets do not have to be touching each other, but will exert their force of attraction or repulsion through a distance of several inches of air in many experiments.

If we place a magnet under a piece of glass or paper which is covered with iron filings, and tap or jar it, the filings will arrange themselves as shown in Fig. 6A and 6B.

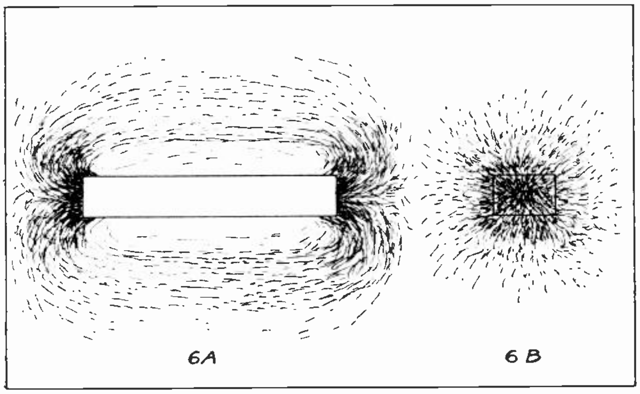

Fig. 6-A. Iron filings on a paper over a bar magnet, show shape of lines of force around the magnet.
Fig. 6-B. Filings over end of magnet.

This gives us some idea of the shape and direction of the lines of force acting around a magnet.

For practical purposes it is assumed that all magnets have what are called **Lines of Force** acting around and through them, and in the direction indicated in Fig. 7.

These magnetic lines are of course invisible to the eye, and cannot be felt, but we can easily prove that the force is there by its effect on a compass needle. By moving a small compass around a large magnet we can determine the direction of the lines of force at various points. **They always travel through the compass needle from its south to north pole, so it will always turn to such a position that its north pole indicates the direction the lines are traveling.** It is well to remember this, as a compass can often be used to determine the direction of magnetic lines of force in testing various electrical machines.

77. MAGNETIC FIELD AND CIRCUIT

The lines of force around a magnet are called **Magnetic Flux,** and the area they occupy is called the **Field** of the magnet.

The strong, useful field of an ordinary magnet may extend from a few inches to several feet around it, but with sensitive instruments we find this field extends great distances, almost indefinitely, but becomes rapidly weaker as we go farther from the magnet.

In Fig. 7, note that the lines of force through the bar or **Internal** path, are from the south to north pole, and outside the magnet through the **External** path, are from the north to south pole. This is a very important fact to remember.

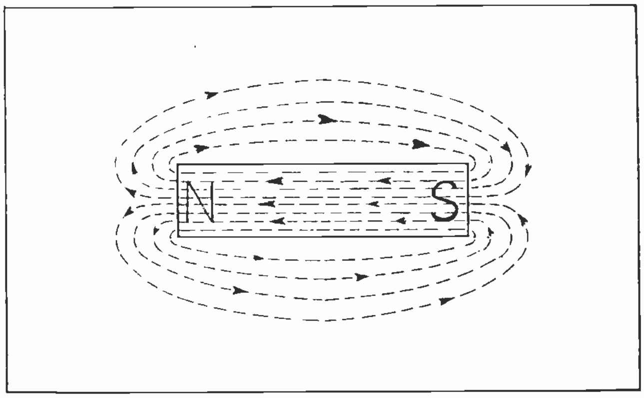

Fig. 7. Sketch of magnetic field, showing direction of lines, inside and outside the magnet.

We can also get further proof of the shape of this magnetic field by floating a magnetized needle in a cork, over a bar magnet as in Fig. 8.

If started at various points in the field the needle will travel the lines as indicated.

The path of lines of force around and through a magnet is often called the **Magnetic Circuit.**

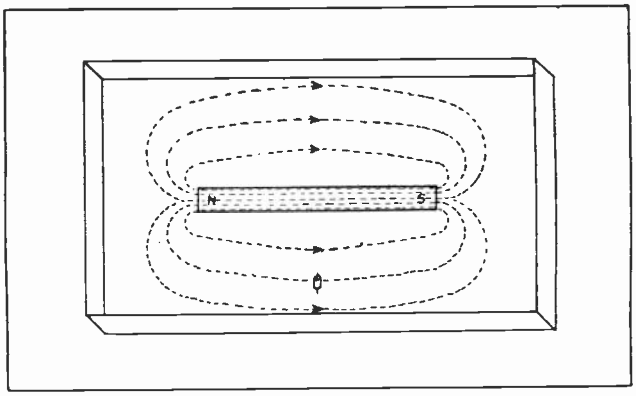

Fig. 8. Floating a needle in a cork, in water over a magnet, to show shape of lines of force.

78. ACTION OF MAGNETIC FIELDS

When two magnets are placed with unlike poles near each other as in Fig. 9, we find that their lines of force combine in one common path through them both as shown by the dotted lines.

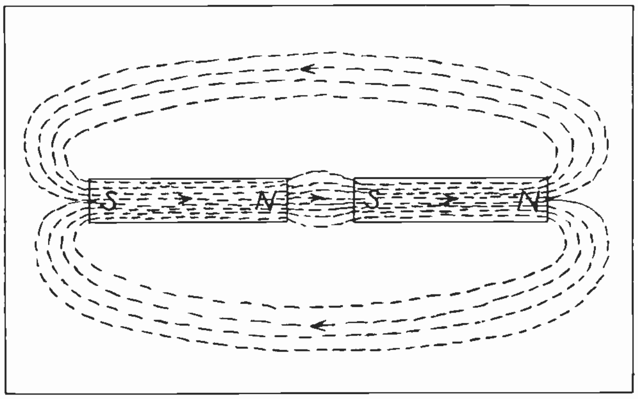

Fig. 9. Two bar magnets with unlike poles near each other, and attracting. Note how their fields join.

These lines then seem to try to shorten their path still more by drawing the magnets together, thus their attraction for each other.

It may be well to consider magnetic lines of force as similar in some ways to stretched rubber bands, revolving like endless belts, and continually trying to contract or shorten themselves.

This will help to get a practical understanding of many important effects and principles of magnetism, without going into lengthy and detailed theory.

If we place two magnets with their like poles near each other as in Fig. 10, we find their fields will not join, as the lines of force are coming in opposite directions. Therefore they crowd apart in separate paths between the ends of the poles, and the magnets push apart or repel each other to avoid this conflict or crowding of the opposing fields.

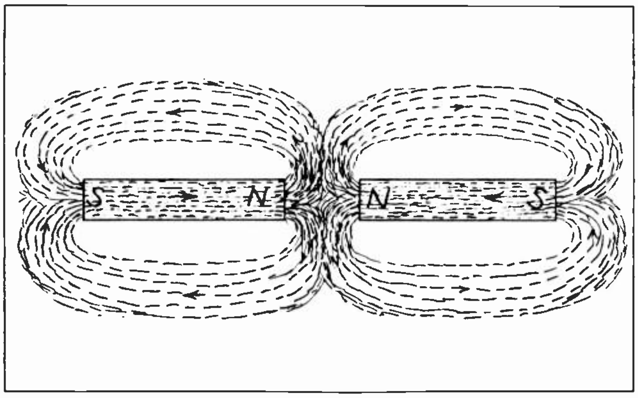

Fig. 10. Two bar magnets with like poles near each other and repelling. Note how their fields oppose.

79. MAGNETIC AND NON-MAGNETIC MATERIALS

In our experiments with magnets we find that only certain materials can be magnetized or attracted by magnets, while others cannot.

Those that can be magnetized we call **Magnetic Materials,** and those that cannot be magnetized we call **Non-Magnetic Materials.**

Iron and steel are good magnetic materials, and most magnets are made from them. Nickel and cobalt are somewhat magnetic. Brass, copper, gold, silver, lead, wood, glass, air, etc., are all non-magnetic materials.

80. PROPERTIES OF MAGNETIC MATERIALS

Soft iron is very easily magnetized, but does not hold its charge long. In fact it loses most of its magnetism as soon as the magnetizing force is removed.

Hard steel is much more difficult to magnetize, but when once charged it holds its magnetism much longer.

A good steel magnet may hold a strong charge for many years. Such magnets are called **Permanent Magnets.**

Materials that hold a charge well are said to have high **Retentivity,** meaning retaining power.

Therefore steel has high retentivity and soft iron is low in retentivity. In order to understand how magnets become charged, and why some will hold a charge better than others, let us briefly consider the molecular theory of magnetism. We know that all matter is made up of very small particles called molecules, and these molecules consist of atoms and electrons.

Each molecule has a polarity of its own, or might be considered as a tiny magnet. In a bar of iron or steel that is not magnetized, it seems that these molecules arrange themselves in little groups with their unlike poles together, forming little closed magnetic circuits as in Fig. 11.

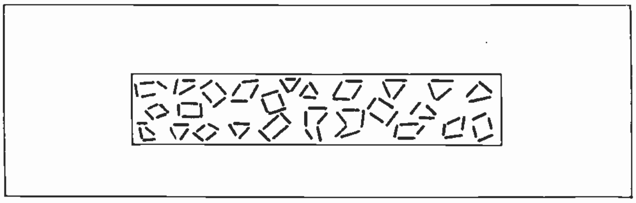

Fig. 11. Simple sketch showing the supposed arrangement of molecules in an unmagnetized bar of iron.

This view, of course, shows the molecules many times larger in proportion to the bar, than they really are.

Now when lines of force are passed through the bar, from some other strong magnet, causing it to become magnetized, the little molecules seem to line up with this flux, so their north poles all point one way and all south poles the other way. (See Fig. 12.)

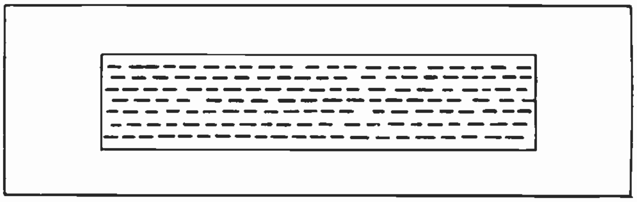

Fig. 12. Molecules lined up, in a fully magnetized bar.

In soft iron this change is effected very easily, and as we have already said it can be easily magnetized. But the molecules of iron also shift back to their natural position easily, so it quickly loses its magnetism.

With hard steel the molecules do not shift so easily, so it is harder to magnetize, but once charged the molecules do not shift back to their normal position so easily, and it holds its magnetism much better, as stated before.

When charging or making permanent steel magnets, tapping or vibrating the bar slightly seems to help speed the process. On the other hand if a permanent magnet that has been charged, is struck or bumped about roughly it will lose a lot of its strength, as the jarring seems to shift the molecules. Therefore, permanent magnets should be handled carefully.

The magnetism of a bar can also be destroyed by heating it to a cherry red. This is called **De-Magnetizing.**

If a magnet is placed in a reversing flux or field from some source, so its charge or polarity is rapidly reversed, the rapid shifting of the molecules sets up heat. This is called **Hysteresis** loss. Naturally this effect is much less noticeable in soft iron than in hard steel, as the molecules shift easier and with less friction and heat, in the soft iron.

81. PERMEABILITY AND RELUCTANCE

Experiments prove that magnetic lines of force will pass through iron and steel, or magnetic materials much easier than through air, wood and brass, or non-magnetic materials of any kind. So iron and steel form a good path for magnetic flux, and are said to have high **Permeability,** and low **Reluctance.** The term reluctance means the same to magnetic flux as resistance means to electric current.

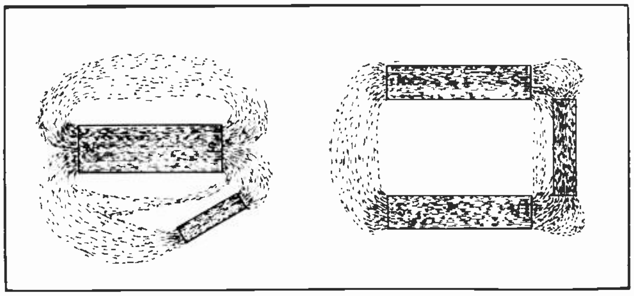

Fig. 13-A. & B. Sketches showing how lines of force can be distorted and made to follow the easier path through the small iron bars.

If we place a small bar of soft iron in the field of a larger magnet as in Fig. 13A or near the ends of two magnets as in Fig. 13B, in both cases the lines of force will largely choose the easier path through the iron as shown. This can be proven by sprinkling iron filings on a glass over such a group of magnets and iron. This not only proves that iron is of lower reluctance than air, but also that magnetic flux will choose the easiest path available.

Good soft iron is only about 1/2000th part as high reluctance as air. For this reason we construct many magnets in the form of a horseshoe, which brings the poles closer together, greatly reducing the air gap reluctance and increasing the strength and life of the magnet. (See Fig. 14A and 14B.)

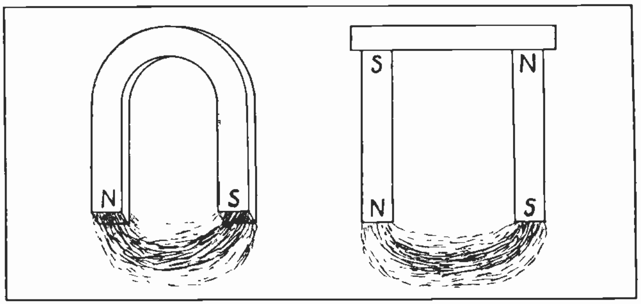

Fig. 14-A. Horseshoe magnets have a much shorter flux path through air from pole to pole.
Fig. 14-B. Double magnet constructed in horseshoe shape, also to shorten its air gap.

In Fig. 14B, the bar joining the two magnets together is called a **yoke.** We often place a soft iron "keeper" across the ends of horseshoe magnets as in Fig. 15, when they are not in use, to provide a complete closed circuit of magnetic material and eliminate the air gap reluctance. This will greatly increase the life of the magnet.

82. PULLING STRENGTH

Horse shoe shaped magnets having unlike poles near each other, have a much greater lifting power when in contact with an iron surface, than the one end of a bar magnet does. This is because the horseshoe type has so much better complete path of low reluctance for its lines of force, and the field will be much more dense, and stronger. (Compare Fig. 15 and 16.)

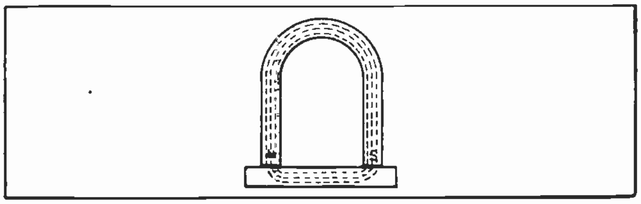

Fig. 15. Horseshoe magnet with keeper bar across its poles to decrease air gap when not in use.

In Fig. 16, the lines must pass a considerable distance through air, which greatly weakens them. In Fig. 15, the lines can travel entirely within a closed iron path or circuit of much lower reluctance, and give a much stronger pull.

A good horseshoe magnet weighing one pound, should lift about 25 pounds of soft iron.

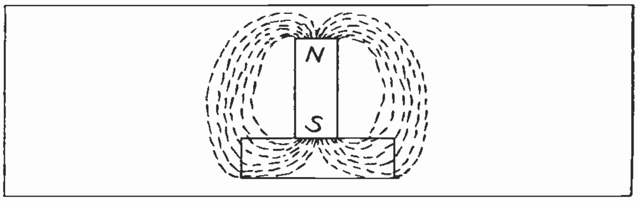

Fig. 16. Bar magnet attracting a piece of iron. Note the long path through air, which the lines of force must take.

83. EFFECT OF AIR GAPS

As air is of such high reluctance it is very important to reduce the air gaps as much as possible in all magnetic circuits where we wish to obtain the greatest possible strength of flux or pull.

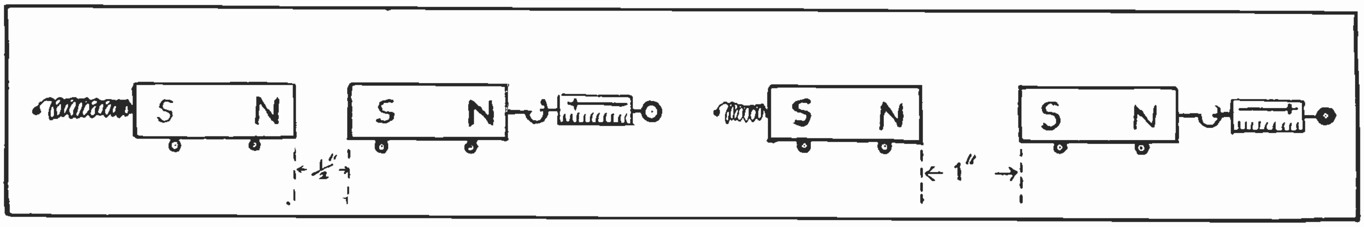

Fig. 17-A. & B. Doubling the distance between two magnets, decreases their pull to ¼ of what it was.

If two magnets are placed as in Fig. 17A, and their pull measured, and then they are moved farther apart as in Fig. 17B, we find that the small increase in the distance or air gap makes a great reduction in their pull. If the distance is doubled, the pull is decreased to about ¼ of what it was.

If the distance is tripled, the pull decreases to about 1/9 of what it was.

If on the other hand we reduce the distance to ½ its original amount, the pull will increase to 4 times the original pull.

So we get another very important law of magnetism as follows:

The force exerted between two magnets varies inversely with the square of the distance between them.

If we change the strength of the magnets we find their combined pull will vary with the **Product of Their Separate Strengths.**

84. MAGNETIC SHIELDS

While iron is a good conductor of magnetic flux, and air is a very poor one, we do not have any known material that will insulate or stop magnetic lines of force. They will pass through any material. But we can shield magnetic flux from certain spaces or objects, by leading it around through an easier path. As before mentioned the lines of force will largely choose the easiest path. So if we arrange a shield of iron around a device as in Fig. 18, we can distort the flux around, and prevent most of it from entering the shielded area.

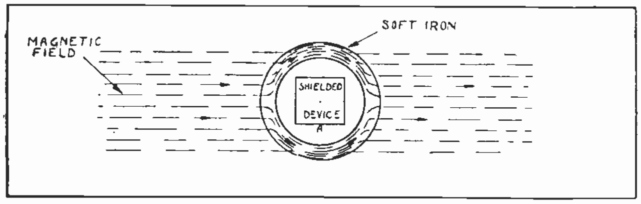

Fig. 18. Iron shield to deflect lines of force away from instrument or device (A).

Quite often the magnetic field of some large generator or electric machine may affect the operation of a meter or some delicate device located near it. So you should remember how to shield such instruments. Many meters are equipped with iron cases to shield their working parts in this manner.

Sometimes in our work with magnets we find evidence of more than two poles, or points of attraction at other places along the magnet besides at its main poles. Such poles are called **Consequent Poles,** and are formed by adjoining sections being oppositely magnetized so the fluxes oppose. Very weak magnets may sometimes develop consequent poles. (See Fig. 19.)

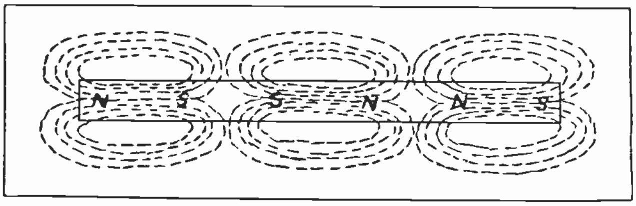

Fig. 19. Consequent poles in a bar magnet.

If a long magnetized bar is broken into several pieces, each piece will take on separate north and south poles. (See Fig. 20.)

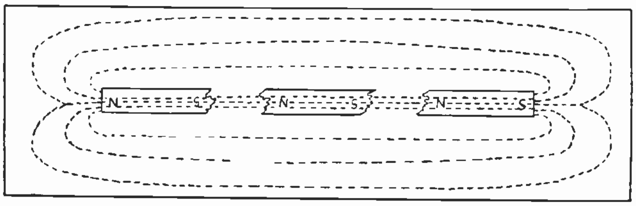

Fig. 20. Bar magnet broken into several pieces. Note each piece takes on separate poles in this case.

Two or more separate magnets with their like poles grouped together will in many cases give more strength than a single magnet the size of the group. Such a magnet is called a **Compound Magnet.** (See Fig. 21A and 21B.)

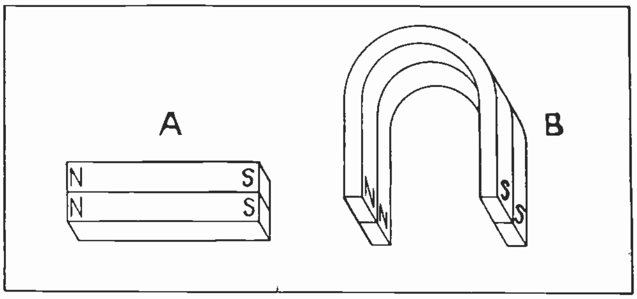

Fig.21-A. Compound bar magnet.
Fig. 21-B. Compound horseshoe magnet.

85. COMPASS TEST

When using a compass to test the polarity of magnets, or the direction of flux on motors or generators, it is well to first test the compass by letting it come to rest in the earth's magnetism, away from the device to be tested. Compass needles sometimes have their polarity reversed by the influence of strong magnets around which they are used. **But the end of the needle that points north is always the north pole, and the one which will point in the direction of flux travel.**

This may seem confusing because we know unlike poles attract, and might wonder how the north pole of the compass would point to the north pole of the earth. But remember that the magnetic pole of the earth which is near its north geographical pole, is in reality a south magnetic pole. This was illustrated in Fig. 2, and explained in Articles 72 and 75.

86. SPECIAL MAGNETIC ALLOYS

There are certain patented alloys of iron and steel mixed with other metals, which have very good magnetic properties. Some of these have higher permeability than soft iron, and others have higher retentivity than hard steel.

Cobalt Steel is one of these improved alloys, especially good for strong, permanent magnets.

Permalloy is another, of very low reluctance, used in thin ribbon form for wrapping telephone and telegraph cables.

We find a few materials that show slight properties of repulsion to either pole of a magnet. These are called **Diamagnetic.**

Some of the uses of permanent magnets were mentioned in the first part of this subject. They are also used for fields of magnetos, in electric meters, for surgical instruments, and many other things.

Before proceeding farther, be sure you have a good understanding of these important principles of magnets and magnetism, as it will be of great value to you in all electrical work. It will also make it easy for you to understand the very interesting section on **Electro-Magnetism** which follows.

ELEMENTARY ELECTRICITY

SECTION EIGHT

ELECTRO-MAGNETISM

You will recall that in an earlier section we found that one of the very important effects of dynamic electricity, was its magnetic effect.

We learned that whenever a current is passed through a wire, it sets up whirling lines of force around the wire. This is called **Electro-Magnetism.**

87. MAGNETIC FIELD AROUND WIRES CARRYING CURRENT

The **strength** of this magnetic field around a wire depends on the **amount** of current flowing, and can be varied at will by controlling the current flow.

The **direction of the line's rotation** depends on the **direction of current through the wire**; reversing if we reverse the current.

If we pass a stiff wire which is carrying current, vertically through a piece of paper, as in Fig. 1, and sprinkle iron filings on the paper, they will arrange themselves in a pattern as shown.

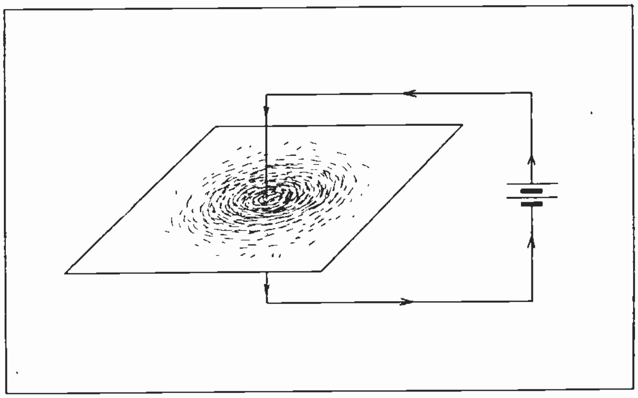

Fig. 1. Electro-magnetic lines shown by iron filings around a conductor.

If we remove the filings and place several small compass needles on a cardboard around the wire, they will point in a circle as shown in Fig. 2. These experiments prove the existence of this invisible magnetic force, and also show the circular shape of the field around the wire. The north poles (black ends) of the compass needles also show the direction the lines of force travel. If the current flow is stopped, the needles will all point north, but as soon as current is again started they will point in a circle once more.

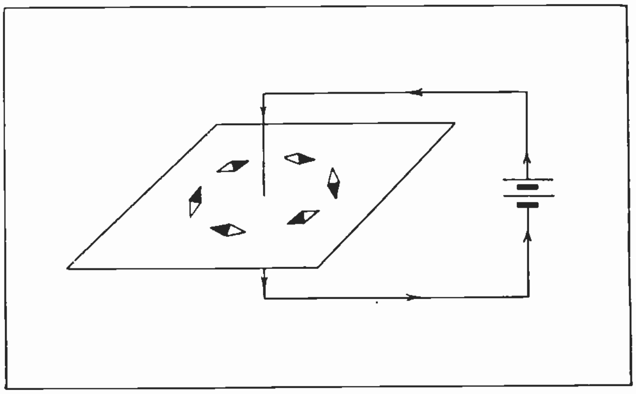

Fig. 2. Small compass needles showing shape and direction of lines around a conductor.

88. DIRECTION OF LINES AROUND CONDUCTORS

Note the direction of current in the wire in Fig. 2, and the direction the needles point. If we change the leads at the battery, and thereby reverse the direction of current through the wire, the needles will at once reverse their direction also. This proves that the field reverses with the current.

We can see from this that if we know the direction of current in any wire, we can determine the direction of the lines of force around it. Or if we know the direction of flux, we can find the direction of current.

A single compass needle is all that is required to tell the direction of flux. See Fig. 3.

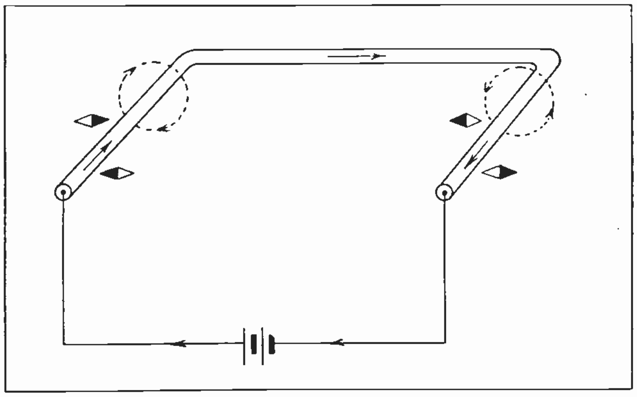

Fig. 3. Convenient compass test for direction of flux around conductors. Note carefully the direction of current and flux of each end of the wire.

Here we have a bent piece of stiff wire connected to a battery by other wires. The current in the left end is flowing away from us, and if we place a compass under the wire it points to the left. If we move the compass above the wire it points to the right.

This proves that **when current is flowing away from you** in a wire, the lines of force are revolving **Clockwise**, as the hands of a clock turn.

When we try the compass on the right end of the loop where the current flows toward us, we find it points opposite to what it did on the left end.

This proves that **when current flows toward you in a wire,** the lines of force revolve **counter clockwise.** See the lines of force indicated by the dotted lines. Study this **rule** over carefully and start practising it at every opportunity on actual electric circuits, because it will be very useful later in your work on power machines and circuits.

89. RIGHT HAND RULE FOR DIRECTION OF FLUX

Another simple rule by which you can determine the direction of current, or flux of wires, is called the **"Right hand rule". Grasp the wire with the right hand, with thumb pointing in the direction of current flow, and your fingers will point in direction of flux around the wire.** (See Fig. 4-A and 4-B.)

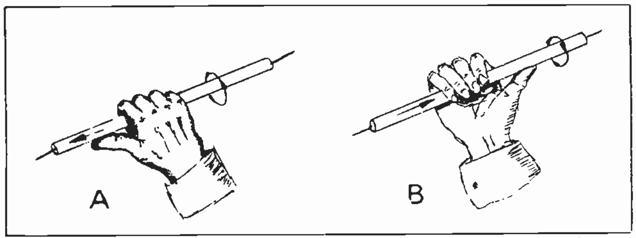

Fig. 4. "Right hand rule" for direction of flux around conductors.

This rule should be memorized by practice.

Of course in the case of a bare, uninsulated wire it is not necessary to touch or actually grasp it to use this rule. After a little practice you can use it very well by just holding your hand near the wire in a position to grasp it, and with thumb in direction of current, your finger tips will indicate the direction of flux.

90. MAGNETIC FORCES BETWEEN PARALLEL WIRES

If we run two wires parallel to each other, close together, and both carrying current in opposite directions, we find their lines of force being in opposite directions tend to crowd apart, and actually make the wires repel each other. See Fig. 5-A.

In Fig. 5-B, are shown two flexible wires suspended close together, yet loosely and free to move. When a rather heavy current is passed through them in the direction shown by the arrows, they will crowd apart quite noticeably. The dotted lines show where they would hang normally when no current is flowing.

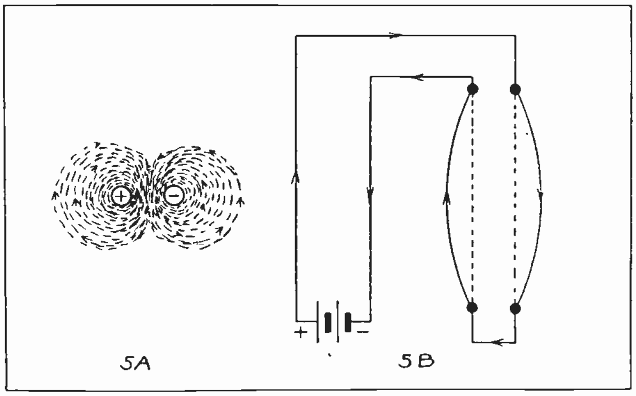

Fig. 5. This sketch shows the repulsion of parallel wires, carrying current in opposite directions.

If we run two wires parallel to each other, close together, and both carrying current in the same direction, we find that their lines of force tend to join together in one common field around both wires, as in Fig. 6-A and 6-B.

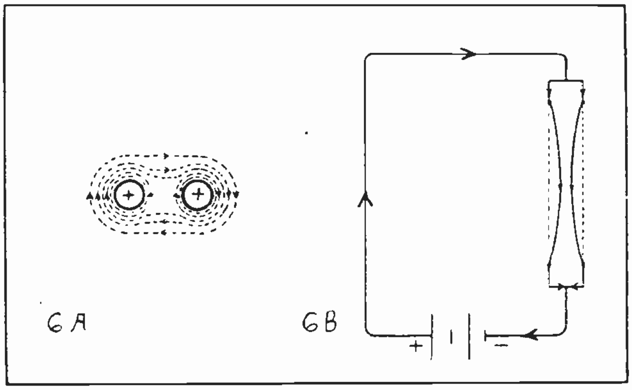

Fig. 6. When parallel wires carry current in the same direction, their flux tends to draw them together.

When wires are close together in this manner, the combined path around the two is shorter than the two separate paths around each. Then by joining each other, the lines avoid going in opposite directions in the small space between the wires. This flux around the two wires tends to pull them together, as the lines of force are always trying to shorten their path, as we learned before.

In Fig. 6-B, we again have the two suspended parallel wires, this time carrying current in the same direction, and we find they now draw toward each other.

This magnetic force exerted between wires often becomes very great in the heavy windings of large power machinery, especially in case of excessive currents during overloads or short circuits. So we find their coils are often specially braced to prevent them moving due to this stress.

91. STRONG FIELDS AROUND COILS

We can make excellent use of this tendency of magnetic flux, to join in a stronger common field around two or more wires, to create some very powerful electro-magnetic fields.

One of the best ways to do this is to wind a coil of insulated wire as shown in Fig. 7-A.

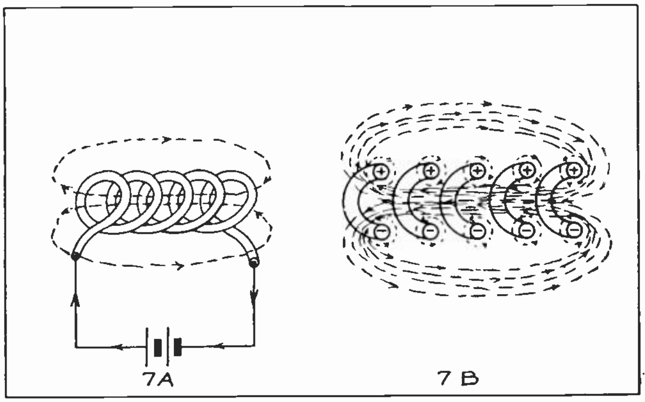

Fig. 7-A. The lines of force around the turns of a coil join together, in one very strong field.
Fig. 7-B. Sectional view, note how the lines join around all turns, and the dense flux set up in the center of the coil.

We can easily see that all turns of such a coil are carrying current in the same direction on all sides of the coil. If we split such a coil from end to end, as shown in Fig. 7-B, we can then see how the flux of all the turns will unite in a common field through the center of the coil and back around the outside.

92. SOLENOIDS

Such a coil of a single layer is called a **Helix.** Coils for creating strong electro-magnetic fields, are often wound with many layers of insulated wire on a spool of brass or fibre, or some other non-magnetic material. Such coils are called **Solenoids.** See Fig. 8.

By referring to both Figs. 7 and 8, we see that all the lines of force travel one way through the center of the coils in a very dense field, and back the other way outside the coil. Thus a solenoid has north and south poles just as a bar magnet does.

Now if we place an iron core inside of a solenoid the field will at once become much stronger, as the iron offers a much better path for the lines of force than air does. When we start to insert the core in a solenoid that has current flowing in it, we find it exerts a strong pull on the core, tending to draw it into the coil. This seems to be an effort of the lines of force to draw the iron into the most dense flux, which is inside the coil.

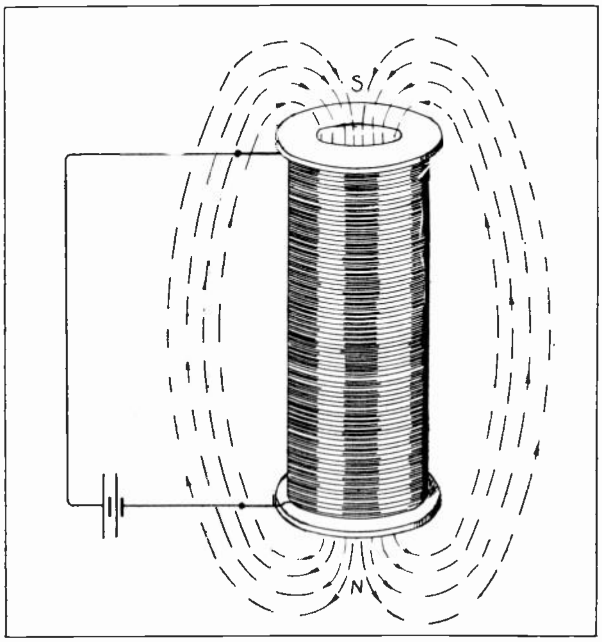

Fig. 8. Solenoid, or coil wound on a non-magnetic tube. Note the direction of the lines, and polarity of this solenoid.

A solenoid will give a strong and fairly uniform pull for about half its own length. This is the most effective distance. Solenoids with movable cores attached to levers, or handles of switches and controllers, are used considerably on electrical equipment.

93. ELECTRO-MAGNETS

While an iron core is inside a coil and current is flowing, we find the iron becomes strongly magnetized due to the very dense field in which it is located. But if the core is soft it loses practically all its magnetism as soon as the current is turned off.

Such a coil and core are called an **Electro-Magnet.** Or in other words an **Electro-Magnet** is a core of soft iron, wound with a coil of insulated wire.

Electro-magnets are the ones used in bells, buzzers, relays, lifting magnets, and electric motors and generators. They can be made extremely powerful, and have the advantage of being magnetized or demagnetized at will, by turning the coil current on or off.

The lifting magnet in Fig. 9, is an example of a huge electro-magnet. With the current turned on it is lowered to the iron it is to lift, often raising many tons at a time. Then when we want it to drop the iron the current is simply turned off.

94. CONSTRUCTION OF SIMPLE ELECTRO-MAGNETS. RESIDUAL MAGNETISM.

Electro-magnets for various tests or handy uses, can be easily made by winding a few turns of insulated wire around any soft iron core, and connecting the coil ends to a dry cell or storage battery. Even a nail or small bolt will do, and will prove quite a strong magnet when wound with 50 to 100 turns of No. 24 to 30 wire, and used with a dry cell. But you will note that as soon as the coil is disconnected, or the battery current turned off, the core will lose practically all its noticeable magnetic strength, as

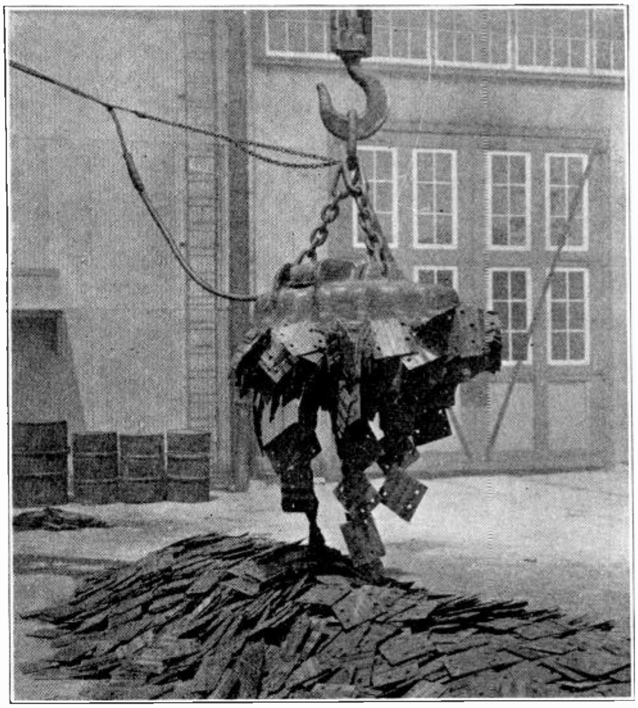

Fig. 9. Electro-magnet used for handling iron and steel. This magnet has a number of coils inside its frame or cover.

far as any attraction is concerned. However, in reality there is almost always a very feeble charge left in the core for a while after the current stops flowing. This charge remaining or residing in the core is called **Residual Magnetism.** The softer iron the core is made of, the less residual magnetism it will retain. Residual magnetism plays a very important part in the operation of many electric generators, as will be found later.

Permanent magnets can be made by placing a piece of hard steel in a coil for a time, with the current turned on. Then when the current is turned off, the hard steel being of higher retentivity than iron, retains considerable of its charge as residual magnetism.

Powerful electro-magnets are often used to charge permanent magnets, by holding or rubbing the magnet to be charged on the poles of the electro-magnet. See Fig. 10.

A good charging magnet of this type for charging magneto magnets, can be made of two round cores of soft iron about 3x6 inches, wound with 500 turns of No. 14 wire on each. They should have a soft iron bar 1x3x8 inches bolted to their bottom ends, and square pieces 1x3x3 inches on their top ends. Such a magnet can be used on a 6-volt storage battery, and is often very handy in a garage or electrical repair shop.

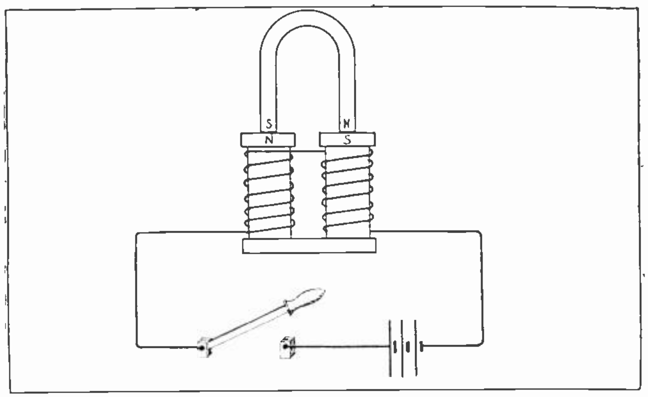

Fig. 10. Powerful electro-magnet for charging permanent magnets. The horseshoe magnet is in position to be charged and its poles will be as shown.

95. POLARITY OF ELECTRO-MAGNETS

It is very important to be able to determine the polarity of solenoids and electro-magnets. A compass will, of course, show the north pole by the attraction of its tail or south pole. But if we know the direction of winding of a coil, and the direction current passes through it, we can quickly find the correct polarity with a simple rule. This rule is called the **Right Hand Rule for Electro-Magnets.**

Grasp the coil with your right hand, with the fingers pointing around the coil in the same direction current is flowing in the wire, and your thumb will point to the north pole of the magnet. See Fig. 11.

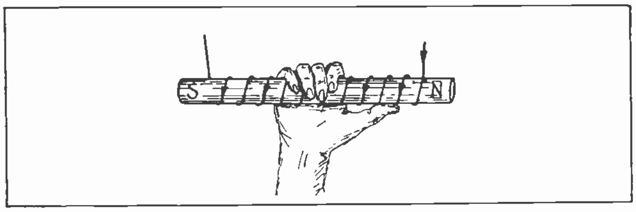

Fig. 11. Right hand rule for determining polarity of electro-magnet.

Every electrical man should know this rule, as there are many uses for it in practical work. Practice it until you can use it easily.

It can also be used to find the direction of current flow if you know the polarity of the magnet. In such a case we again grasp the coil with the right hand, thumb pointing to north pole, and the fingers will point in direction of current flow around the coil.

We already know that the flux around a wire will reverse if we reverse the current flow. This is equally true then of the flux around a coil or group of wires. So we can reverse the polarity of a solenoid or electro-magnet at will, merely by reversing the current supply wires to it.

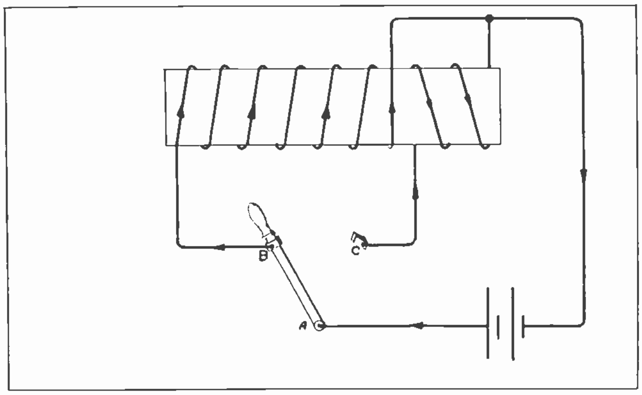

Fig. 12. Electro-magnet with demagnetizing coil for destroying residual magnetism.

Some special electro-magnets are wound with a separate demagnetizing coil, in addition to the main coil.

This may be a smaller coil, wound in the reverse direction to the main coil, so if connected just for an instant, after main coil is turned off, it will just destroy the residual magnetism that might otherwise remain. See Fig. 12.

If when switch (A) opens the main circuit at (B), it is momentarily closed to (C), it will create a reverse flux to more quickly demagnetize the core.

It is also possible to wind a coil on a core so it will create no magnetism in the core. See Fig. 13.

Here the coil has been wound with two wires, and their ends connected together. The current flows through an equal number of turns in each direction, so practically no magnetism will be set up in the core. Non-magnetic coils of this type are often used in meter construction.

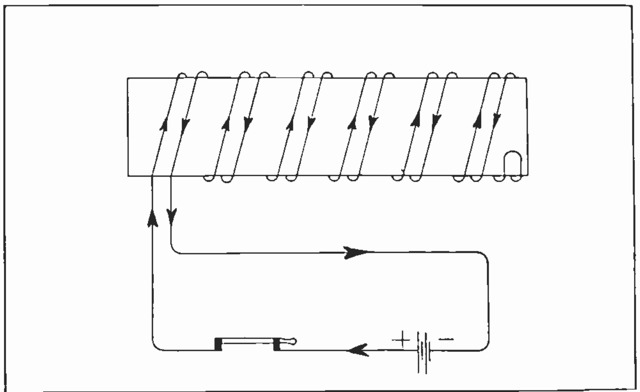

Fig. 13. Non-magnetic winding. One half of the turns oppose the other half, so the core does not become magnetized.

96. UNITS, SATURATION AND STRENGTH OF ELECTRO-MAGNETS

The strength of an electro-magnet depends on the number of turns in its coil, and the amperes or amount of current flowing through them, or as we say the **Ampere-Turns.**

The **Ampere-Turns** are the product obtained, when the amperes are multiplied by the number of turns.

A coil of 100 turns, carrying 2 amperes, has 200 ampere-turns. (Abbreviated I.N.)

Another coil of 400 turns carrying ½ ampere, has 200 ampere-turns.

We say therefore that the number of ampere turns, determines the **Magneto-Motive-Force.** (Abbreviated M.M.F.) and meaning magnetizing force.

The greater the M.M.F. or number of ampere-turns we apply to a given core, the stronger magnet it becomes, up to certain limits.

As we go on increasing the ampere-turns and strength of a magnet, the lines of force in its core become more and more dense and numerous. After we reach a certain point in flux density, we find a further considerable increase of ampere turns of the coil, does not cause much increase of flux in the core, as we have apparently reached its practical limit in the number of lines it can carry. This is called the **Saturation-Point.**

Good magnetic iron or steel can carry about 100,000 lines per square inch, before reaching the practical saturation point. Therefore, if we wish to make electro-magnets requiring more than 100,000 lines of force, we should use a core larger than 1 square inch cross sectional area. **Fifteen ampere-turns per inch of core length, on a closed core of 1 square inch area, will produce approximately 100,000 lines of force.**

The chart in Fig. 14, showing the lines of force per square inch, produced in soft iron by various numbers of ampere-turns, may often be very useful to you.

To read the chart select any number of ampere turns at the bottom line and run up the vertical lines to the curve, then to the left edge, and read number of lines. Thus 5 ampere turns gives about 67,000 lines per square inch. 10 ampere turns gives 90,000 lines. 12 ampere turns about 95,000 lines, etc.

It is interesting to note how the factors in a magnetic circuit can be closely compared to those of an electric circuit. In the electric circuit, we have pressure or **Electro-Motive-Force, Current and Resistance.** In the magnetic circuit we have **Magneto-Motive-Force, Flux and Reluctance.** And in the electric circuit we have the units volt, ampere and ohm, while in the magnetic circuit we have the **Ampere-Turn, Lines of Force, and Rel.**

The **Rel** is a name often used for the unit of reluctance. Its symbol is R.

One rel is the amount of reluctance offered by a prism of air or non-magnetic material, 1 inch square and 3.19 inches long. We know that iron is much lower reluctance than air, and it takes a bar of mild steel or wrought iron 1 inch square and 460 feet long to have a reluctance of 1 rel. Cast iron is somewhat higher reluctance, and a bar 1 inch square and 50.7 feet long has 1 rel reluctance.

One ampere turn can set up one line of force in a reluctance of 1 rel.

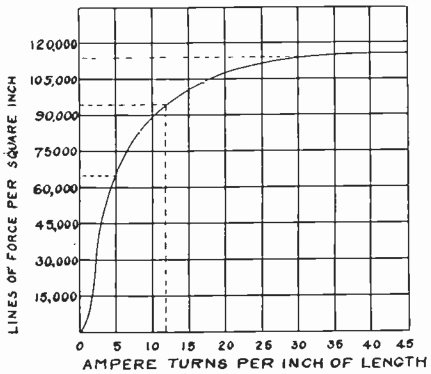

Fig. 14. Curve showing number of lines of force that can be set up in soft sheet iron, with various numbers of ampere turns.

97. PRACTICAL ELECTRO-MAGNET CALCULATIONS

To calculate the total flux or lines of force in a magnetic circuit we can use the following formulas:

$$\phi = \frac{M}{R}$$

In which:

ϕ equals flux in lines of force.
M equals MMF in ampere turns.
R equals reluctance in rels.

For example, if we have 1200 ampere turns M.M.F., on a magnetic circuit of .03 rel, what would be the total flux?

$$\phi = \frac{M}{R}, \text{ or Flux } = \frac{1200}{.03} \text{ or } 40{,}000 \text{ lines.}$$

In order to be able to calculate the reluctance of a magnetic circuit, we must know the **Reluctivities** of common magnetic and non-magnetic materials. **Non-magnetic materials all have a reluctivity of about .313 rel, per inch cube.**

Mild steel or wrought iron usually has a reluctivity of about .00018 rel, per inch cube, and cast iron .00164 rel per inch cube, under favorable conditions. But of course, the values vary somewhat with the density of the flux used in the metals.

Knowing these values, the reluctance of a core can be found as follows:—

$$R = \frac{\nu \times L}{A}$$

In which:

R equals rels.
ν equals reluctivity of core per inch cube.
L equals length of core in inches.
A equals cross sectional area of core in square inches.

If you wish to make a magnet using a wrought iron core 2x2x8 inches, what would the core reluctance be?

$$R = \frac{\nu \times L}{A}, \text{ or } R = \frac{.00018 \times 8}{4} \text{ or } .00036 \text{ rel.}$$

If the same magnet has an air gap of about 2x2x1 inches, what would the total reluctance of the circuit be, including the core and air?

$$R = \frac{\nu \times L}{A}, \text{ or } R = \frac{.313 \times 1''}{4} = .07825 \text{ rel.}$$

reluctance of air core.

Then .00036 plus .07825 = .07861 rel reluctance of total circuit.

If you wind 1000 turns of wire on this core, and pass 5 amperes of current through the coil, how much flux will be set up?

5 amps × 1000 turns equals 5000 ampere turns or I.N., and I.N. also equals M or MMF.

Then from our formula for determining flux:

$$\phi = \frac{M}{R}, \text{ or flux } = \frac{5000}{.07861} \text{ or } 63{,}605 \text{ lines.}$$

98. LIFTING POWER

The pulling or lifting power of a magnet depends on the flux density in lines per square inch, and the area of the poles in square inches. Then to determine the actual lift in pounds we use the figure 72,134,000, which is a "constant," determined by test of the ratio of lines to lbs.

From this we get the very useful formula:

$$\text{Pounds Pull} = \frac{\text{Area} \times (\text{Flux Density})^2}{72{,}134{,}000}$$

(Note the flux density is to be squared or multiplied by itself.)

If a magnet has a pole area of 4 square inches and a flux density of 100,000 lines per square inch, what would be its lifting power?

$$\text{Lbs.} = \frac{4 \text{ X } 100{,}000^2}{72{,}134{,}000} \text{ or } 554.5 + \text{ pounds.}$$

So we find that a good magnet should lift over 138 pounds per square inch of pole surface.

We can usually depend on a lift of over 100 pounds per square inch even though the magnet is only working at a density of 90,000 lines per square inch. This, of course, means the lift obtainable when both poles of the magnet are actually in good contact with the iron to be lifted.

You have now learned how to use the units Ampere-turn, lines of force, and rel, to calculate flux and pull of magnets by simplified formulas.

99. C. G. S. UNITS

It may be well to mention here another set of units used in some cases instead of those above mentioned.

These are the **Gilbert, Maxwell, and Oersted.**

The **Gilbert** is a unit of M.M.F., similar to the ampere-turn, but one ampere-turn is larger, and equal to 1.257 Gilbert.

The **Maxwell** is a unit of flux, or the same as one line of force.

The **Oersted** is a unit of reluctance, and is the reluctance of 1 cubic centimeter of air or non-magnetic material.

This second set of magnetic units are from the C.G.S. (Centimeter, gram, second) system of units, and can be used for practically the same purpose as the ampere-turn, line of force, and rel. They merely differ slightly in size, the same as the centimeter and the inch are both units of measurement, only of different sizes.

The practical man will probably find the ampere-turn, lines of force, and rel, much easier units to use, because they deal with square inches instead of centimeters, and the ampere-turn is so easily understood, as a unit of M.M.F. The other units are merely mentioned and explained here, so if you see or hear them used from time to time you will understand their meaning.

Direct current is best for operation of Electro-magnets, as its steady flow gives a much stronger pull per ampere-turn, than alternating current.

However, many A. C. magnets are used on motor controllers, relays, circuit breakers, etc.

100. MAGNET WINDING AND REPAIRS

In making electro-magnets the core should be of good soft iron, and covered with one or more layers of oiled paper or varnished cloth insulation.

This will prevent the wires of the first layer of winding from becoming grounded or shorted to the core, if their insulation should become damaged.

Some sort of end rings should be provided to hold the ends of the winding layers in place. Hard fibre is commonly used for this purpose. See Fig. 15, which shows a sectional view of an electro-magnet.

Some magnet coils are wound with thin insulation between each layer of wire, and some are wound without it. It is not absolutely necessary to have the turns of each layer perfectly flat and even, as they are in machine wound coils, to make a good magnet. But they should be wound as smooth and compact as possible.

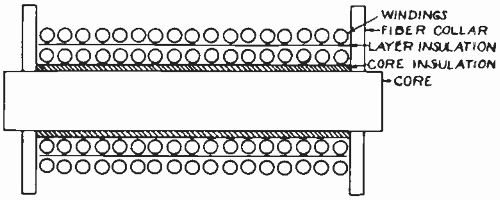

Fig. 15. Sectional view of electro-magnet, showing core, insulation and winding.

Magnet wires, with insulation of cotton, silk, enamel, or combinations of cotton-enamel or silk-enamel, are used for winding electro-magnets. Enamel is excellent electrical insulation, takes up the least space in the coil, and carries heat to the outside of coil very well. Therefore it is ideal for many forms of compact coils, of fine wires. But the cotton or silk covered wires are easier to handle and wind, as they stand the mechanical abuse better.

When winding a magnet coil with very fine wires which are easily broken, it is well to splice a piece of heavy flexible wire to the fine wire, for both starting and finishing leads of the coil. The piece of heavier wire used in starting the coil should be long enough to make several turns around the core, to take all strain off the fine wire in case of a pull on this end wire. Then wind the fine wire over the "lead in" wire, and when the coil is finished attach another piece of heavy wire, and wrap it several times around the coil, to take any possible strain on this outer "lead" wire. Any splices made in the coil should be carefully done, well cleaned, and soldered, so they will not heat up, arc or burn open, after the coil is finished and in service. A layer of tape or varnished cloth should be put over the outside of the coil to protect the wires from damage.

When repairing and rewinding magnet coils from motors, controllers, relays, or any electrical equipment, be careful to replace the same number of turns and same size of wire as you remove. Otherwise the repaired coil may overheat or not have the proper strength.

If the wire removed is coarse, the turns can usually be carefully counted. If it is very fine and perhaps many thousands of turns, it can be accurately weighed, and the same amount by weight, replaced.

The size of the wire used for the repair should be carefully compared with that removed, by use of a wire gauge or micrometer.

The same grade of insulation should be used also, because if thicker insulation is used it may be difficult to get the full number of turns back on the coil, or it may overheat, due to the different heat carrying ability of the changed insulation.

101. TESTING COILS FOR FAULTS

It is very simple to test any ordinary magnet coil for "open circuits," "grounded circuits" or "short circuits," commonly referred to as opens, shorts, and grounds.

A test lamp or battery and buzzer can be used for most of these tests.

See Figs. 16-A, B and C.

In Fig. 16-A, the coil has a break or "open," and a battery and test lamp or buzzer connected to its ends, will not operate, as current cannot pass through. If the coil was good and not of too high resistance, the lamp or buzzer should operate. In testing coils of very high resistance, a high voltage magneto and bell are often used instead of the battery and lamp.

In Fig. 16-B, the insulation of one turn of the coil has become damaged, and allows the wire to touch the core. This is called a "ground."

With one wire of the lamp and battery circuit connected to the core, and the other connected to either coil wire, the lamp will light, showing that some part of the coil touches the core and completes the circuit. If there were no grounds and the insulation of the entire coil was good, no light could be obtained with this connection, to one coil lead and the core.

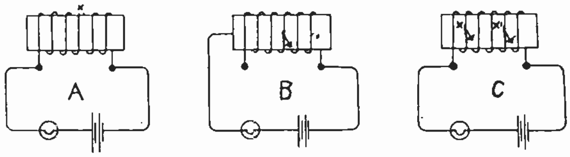

Fig. 16. Methods of testing coils for faults.

In Fig. 16-C, the coil has developed two grounds at different places, thus "shorting" out part of the turns, as the current will flow from X to X1 through the core, instead of around the turns of wire. With the battery and lamp connected as shown this would usually cause the lamp to burn a little brighter than when connected to a good coil. If a good coil of the same type and size is available, a comparative test should be made.

Some of the turns being cut out by the "short" reduces the coils resistance, and more current will flow through the lamp. In some cases a low reading ammeter is used instead of the lamp, to make a more accurate test.

Short circuits may also occur by defective insulation between two or more layers of winding, allowing the turns to come together and possibly shorting out two or more layers, thus greatly weakening the coil and causing overheating.

Figs. 17, 18, 19 and 20, show several types of electro-magnets.

Note carefully the windings and direction of current flow in each of these magnets, and check the polarity of each with your right hand rule. This will be excellent practice and help you to remember this valuable rule.

The two coils on the double magnet in Fig. 17, are wound in opposite directions to create unlike poles together at the lifting ends. This is very important and necessary, or otherwise the magnet would have like poles, and not nearly as strong attraction or pull. The coils of the telephone receiver and bell, in Fig. 19, are also wound oppositely for the same reason.

Those in the motors in Fig. 20 are wound opposite to create unlike poles adjacent, to allow a complete magnetic circuit from one to the other. Note carefully the path of the flux in each case.

If you have carefully studied this section on magnetism and electro-magnetism, you have gained some very valuable knowledge of one of the most important subjects of electricity.

You will undoubtedly find many definite uses for this knowledge from now on, and it will be a great help in understanding electrical machines of practically all kinds.

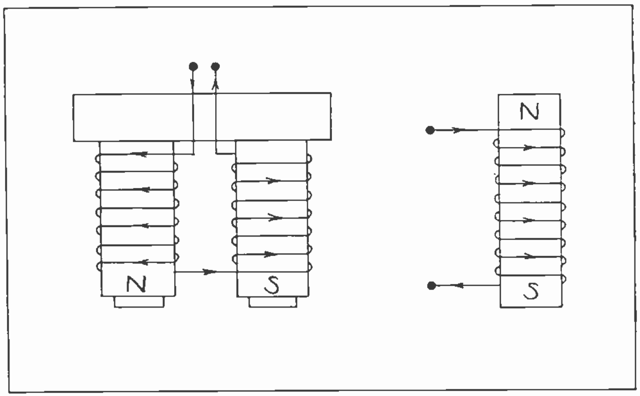

Fig.17. Double and single electro-magnets.

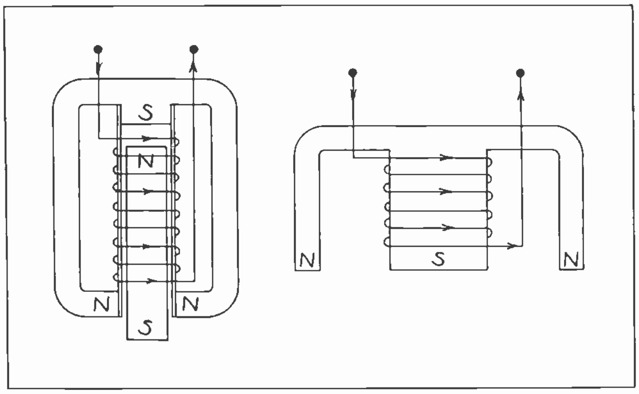

Fig. 18. Plunger type magnet at left. Shell type magnet at right.

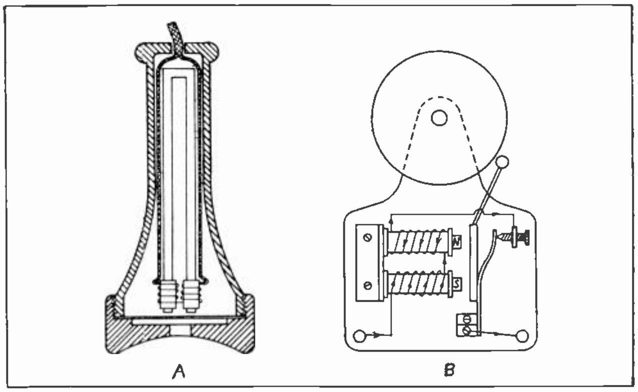

Fig. 19. Sketches showing use of electro-magnets in telephone receiver and door bell.

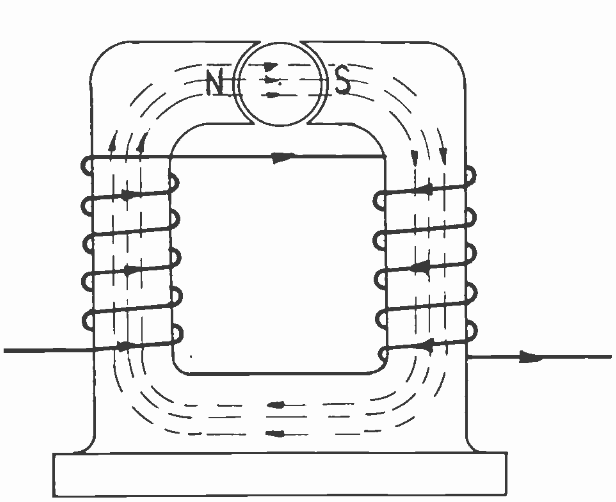

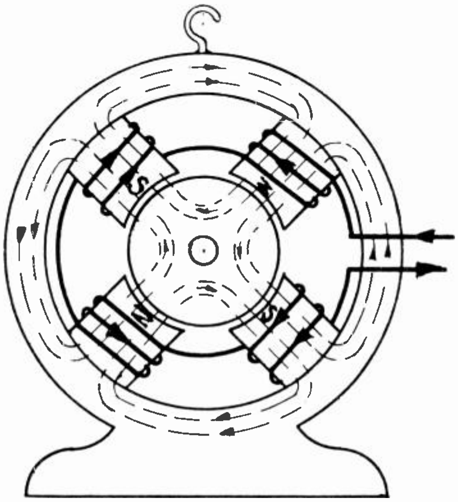

Fig. 20-A. Flux path in a simple early type of motor. Fig. 20-B. Note the several flux paths in this modern 4 pole motor frame and poles.

ELEMENTARY ELECTRICITY

SECTION NINE

ELECTRO-MAGNETIC INDUCTION

Electro-magnetic induction is another very interesting and important subject. This is the principle used in all of our power plant generators, motors, transformers and many other electrical machines.

102. GENERATING ELECTRIC PRESSURE BY INDUCTION

If we move a piece of wire through magnetic lines of force as in Fig. 1, so the wire cuts **across** the path of the flux, a voltage will be induced in this wire. Faraday first made this discovery in 1831.

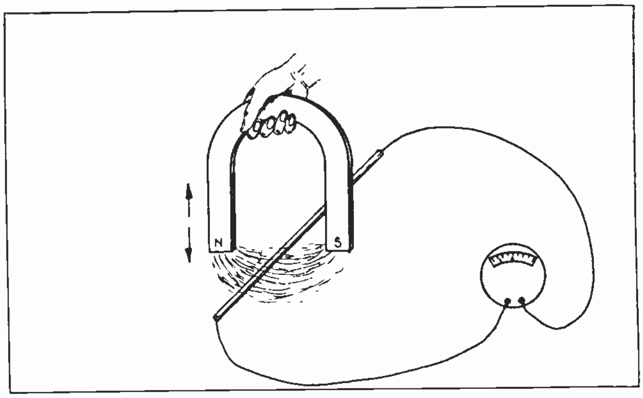

Fig. 1. When a wire is moved through magnetic flux, voltage is generated in the wire.

If we connect a sensitive voltmeter to this wire, thus completing the circuit, the needle will indicate a flow of current every time the wire is moved across the lines of force. This induction, of course, only generates electrical pressure or voltage in the wire, and no current will flow unless the circuit is complete as shown in Fig. 1. So it is possible to generate voltage in a wire, without producing any current, if the circuit is open.

In fact we never do generate current, but instead we generate or set up the pressure, and the pressure causes current flow if the circuit is completed. But it is quite common to use either the term induced voltage, or induced current. This is all right and sometimes simpler to state, if we simply remember that current always results from the production of pressure first, and only when the circuit is closed.

103. DIRECTION OF INDUCED PRESSURE AND CURRENT

Referring again to our experiment in Fig. 1, if we move the wire up through the flux the meter needle reads to the left of zero, which is in the center of the scale. If we move the wire down through the flux, the needle reads to the right. If we move the wire rapidly up and down, the needle will swing back and forth, to left and right of the zero mark. This proves that the direction of the induced pressure and resulting current flow, depends on the direction of movement through the magnetic field, and that we can reverse the voltage and current, merely by reversing the direction of movement of the wire.

A simple rule to determine the direction of the voltage induced, when the direction of the lines of force and movement of the conductor are known, is as follows:

Consider the lines of force as similar to moving rubber belts, and the wire as a pulley free to revolve when it is pushed against the belts. (See Fig. 2.)

Assume (A) and (B) to be the ends of wires to be moved. (A) is moving upwards against lines of force traveling to the right. Then its imaginary rotation would be clockwise as indicated by the arrows around it, and this will be the direction the lines of force will revolve around the conductor from its own induced current. Then remembering our rule from the section on electro-magnetism, we know that clockwise flux indicates current flowing away from us.

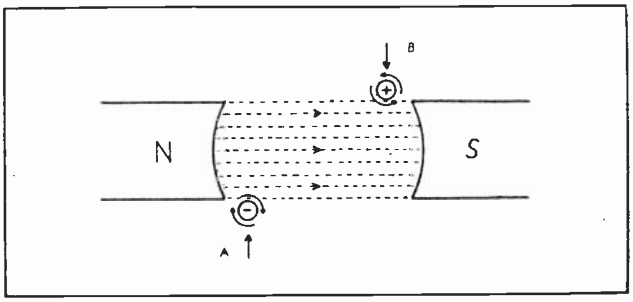

Fig. 2. Sketch of conductors moving through flux, as in a simple generator. Note direction of induced pressure.

Wire (B) is moving down against the lines of force, so if it were to be revolved by them it would turn counter clockwise. As this would be the direction of flux around the wire from its induced current, it indicates current would flow toward us.

Another rule that is very convenient, is the **right hand rule for induced voltage,** as follows:

Hold the thumb, forefinger and remaining fingers of the right hand, at right angles to each other. Then let the forefinger point in the direction of flux travel, the thumb in direction of movement of the wire, and remaining fingers will point in the direction of the induced pressure. (See Fig. 3.)

In the illustration the flux moves to the left, the wire moves up, and the current in the wire would be flowing toward you, as indicated by the three remaining fingers.

Practice this rule, as you will find a great deal of use for it on the job, in working with motors, generators, etc.

104. AMOUNT OF PRESSURE GENERATED DEPENDS ON SPEED AT WHICH LINES ARE CUT

Referring back again to Fig. 1, if we hold the

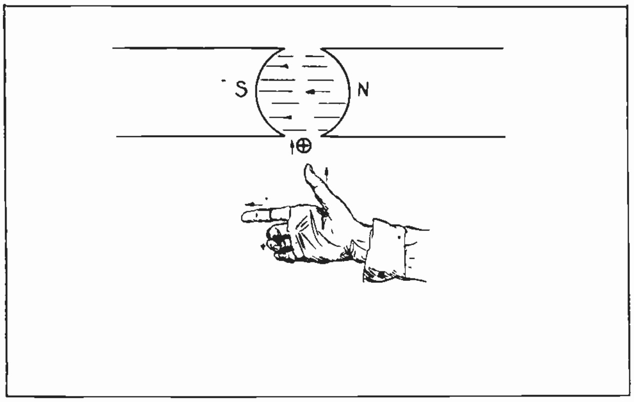

Fig. 3. Right hand rule for direction of induced voltage. Compare position of fingers with direction of flux and wire movement.

wire still, even though in the magnetic field, no pressure will be generated. Or if we move the wire to right or left, parallel to the path of the flux, no pressure will be produced. So we find that the wire must cut **across** the flux path to generate voltage, or as we often say it must be "Cutting" the lines of force.

The faster we move the wire through the magnetic field, or the stronger the field and greater the number of lines of force, the farther the meter needle moves.

So the **amount of pressure or voltage produced** by electro-magnetic induction, **depends on the speed with which lines of force are cut,** or the number of lines cut per second.

A very important rule to remember is that **one conductor cutting 100,000,000 lines of force per second will produce 1 volt pressure.**

This probably seems to be an enormous number of lines to cut to produce one volt, but we do not actually have to use one magnet with that many lines of force, as we can speed up the movement of the conductor in an actual generator, so fast that it will pass many magnet poles per second.

We can also add the voltage of several wires together by connecting them in series in the form of coils. (See Fig. 4A and 4B.)

Here we have three separate wires all of which are moved upwards through the flux at once, and we find an equal amount of pressure is induced in each, all in the same direction. Then when we connect them all in series as shown, so their voltages will all add up in the same direction in the circuit, our meter reads three times as much voltage as it did with one wire. Generator coils are often made with many hundreds of turns so connected, thus obtaining very high voltage.

105. SIMPLE GENERATOR PRINCIPLES

In Fig. 5A and Fig. 5B, are shown single turn coils A, B, C, D, arranged to be revolved in the field of permanent magnets. The ends of the coils are attached to metal **slip rings** which are fastened to the shaft, and revolving with it. This gives a connection from the moving coils to the lamp circuits by means of metal or carbon brushes rubbing on the slip rings.

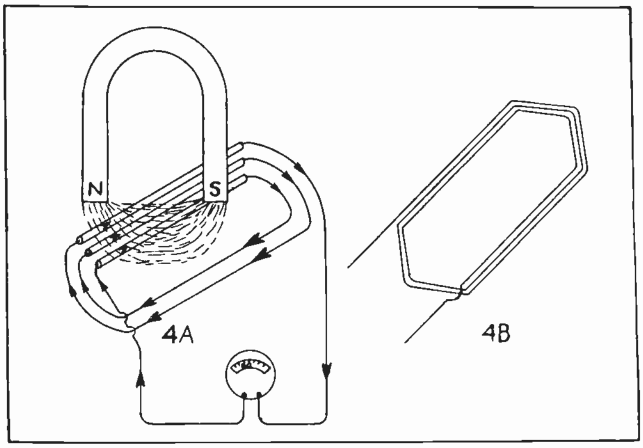

Fig. 4-A. Using several wires connected in series to obtain higher induced voltage.
Fig. 4-B. Coil of several turns, as used in generators.

Assume that the coil A, B, C, D in Fig. 5A, revolves to the right, or clockwise. The wire A. B, will be moving upward through the flux, and the induced pressure will be in the direction indicated by the arrow on it.

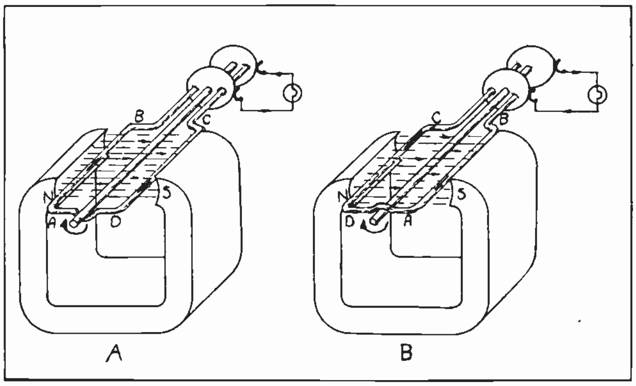

Fig. 5-A. Simple electric generator of one single wire loop, in the flux of a strong permanent magnet.
Fig. 5-B. Here the coil has revolved one-half turn farther than in (A).

Wire C, D, is moving downward, and its induced pressure will be in the reverse direction, but will join with, and add to that of wire A, B, as they are connected in series in the loop. Note that the current flows to the nearest collector ring, and out along the lower wire to the lamp, returning on the upper wire to the farthest collector ring and the coil.

In Fig. 5B, is shown the same coil after it has turned one-half revolution farther, and now wire A, B, is moving downward instead of up as before. Therefore, its pressure and current are reversed. The wire C, D, is now in position where A, B was before, and its pressure is also reversed. This time we find that the current flows out to the farthest collector ring, and over the top wire to the lamp, returning on the lower wire.

106. ALTERNATING CURRENT AND DIRECT CURRENT

So we see that as the conductors of such a simple generator revolve, passing first a north pole and then a south, their current is rapidly reversed. Therefore we call the current it produces **alternating current**, abbreviated A. C.

If we wish to obtain **direct current** (D. C.), we must use a **commutator** or sort of rotary switch, to reverse the coil leads to the brushes as the coil moves around. All common generators produce A. C. in their windings, so we must convert it in this manner if we wish to have D. C. in the external circuit. (See Fig. 6A and 6B.)

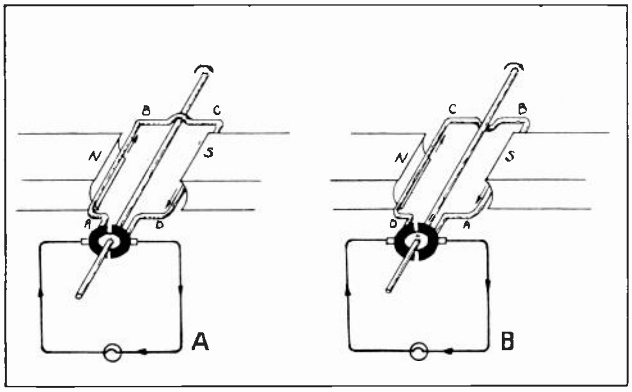

Fig. 6-A and B. Single loop generators with simple commutators, for producing direct current. Note how current continues in same direction through the lamp, at both positions of the coil.

Here again we have a revolving loop. In Fig. 6A, the wire A, B is moving up, and its current is flowing away from us, and that of C. D. toward us. The coil ends are connected to two bars or segments of a simple commutator, each wire to its own separate bar. With the coil in this position, the current flows out at the right hand brush, through the lamp to the left, and re-enters the coil at the left brush.

In Fig. 6B, the coil has moved one-half turn to the right, and wire A, B is now moving down, and its current is reversed. However, the commutator bar to which it is connected has also moved around with the wire, so we find the current still flows in the same direction in the external circuit through the lamp.

107. INDUCTION COILS

Now did you think of this?

If moving a wire through lines of force will induce pressure in the wire, why wouldn't it also generate pressure if the wire was stationary, and the flux moved back and forth across it?

That is exactly what will happen. (See Fig. 7.) Here we move the magnet up and down, causing the lines of force to cut across the wire which is stationary, and again we find that the meter needle swings back and forth. This proves that pressure is generated whenever lines of force are cut by a wire, no matter which one it is that moves.

You also know that every wire carrying current has flux around it.

Now if we place one wire which is carrying current, parallel and near to another wire, its flux will encircle the wire that has no current. (See Fig. 8A and 8B.)

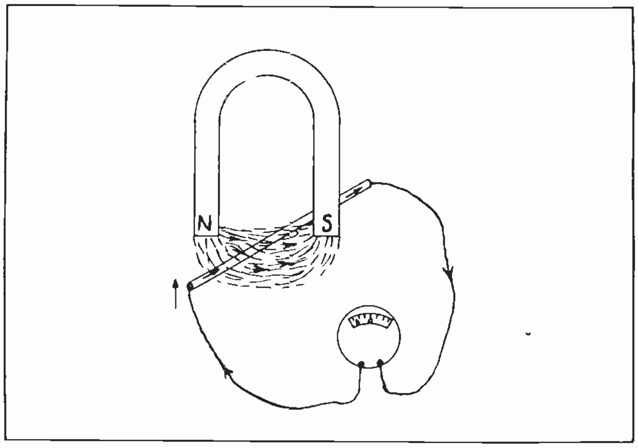

Fig. 7. Induction experiment, moving the magnet and its field instead of the wire.

When we close the switch the current starts to flow in wire "B," building up its magnetic field around it. In building up, these lines seem to expand outward from the wire, cutting across wire "C," and the meter will show a momentary deflection when the switch is closed.

After the flux has been established the meter needle drops back to zero, and remains there as long as the current in wire "B" does not change. This shows that no induction takes place unless the current is changing, causing the flux to expand or contract and cut across the wire.

When we open the switch interrupting the current flow, and allowing the flux to collapse around wire "B," the meter needle reads in the opposite direction to what it did before. Then it drops back to zero once more after the flux has died down.

If we open and close the switch rapidly, causing a continual variation in current and flux of wire "B," the meter needle will swing back and forth, showing that we are inducing alternating current in wire "C." This is the principle on which induction coils and power transformers operate.

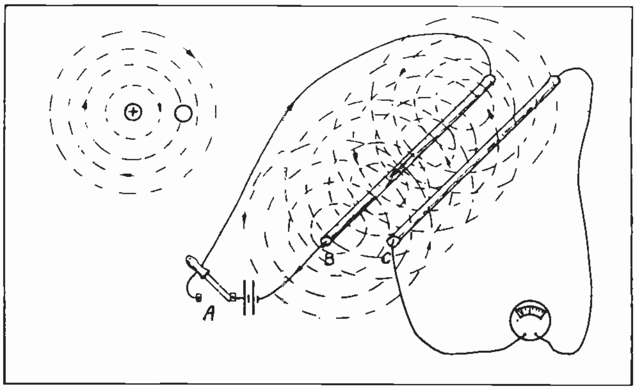

Fig. 8-A and B. Sketch showing how induction takes place between two wires, when current and flux are varied.

If we arrange two coils as in Fig. 9, we find the induction between them much greater than with the single straight wires, because of the stronger field set up around coil A, and the greater number of turns in coil "B" which are cut by the flux. The meter will now give a much stronger reading when the switch is opened and closed.

In Fig. 9, coil A, which is said to be excited or energized by the battery, is called the **"Primary."** Coil "B," in which the voltage is induced by the flux of the primary, is called the **"Secondary.**

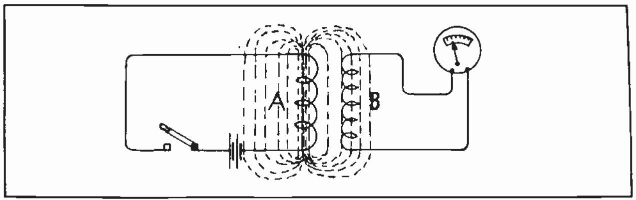

Fig. 9. Induction between two coils. A is the "primary coil" in which exciting current flows. B is the "secondary coil" in which current is being induced.

108. HIGH VOLTAGE SPARK COILS

The greater number of turns we use in the secondary coil, the higher will be the induced voltage. This is due to the fact that all the turns are affected by the flux, and all are in series, so the voltages induced in each turn are added, giving a pressure equal to their sum at the coil ends.

In this manner we can get very high voltages by winding the primaries and secondaries of induction coils or transformers with proper ratios, or numbers of turns. This is called stepping up the voltage. Of course when we increase the voltage in this manner, the current in the secondary decreases proportionately, or by the same proportion as the voltage is increased. Thus the watts remain the same except for slight losses in the coils.

In Fig. 10, is shown the construction of a simple type of spark coil. The iron core (A) is made of soft iron strips called **Laminations,** or sometimes of iron wires bundled tightly. The primary coil which is a few turns of rather heavy wire, is wound over the insulated core. Then after a layer of good insulation is placed over the primary, the secondary coil is wound over it all. This secondary usually consists of several thousand turns of very fine wire. and may have a pressure of several thousand volts induced in it.

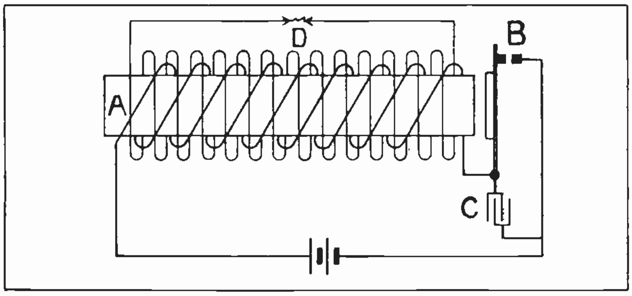

Fig. 10. Diagram of a spark coil, showing primary and secondary coils and make and break contacts.

Such high voltages will cause a hot spark through an air gap, as at "D."

An interrupter to make and break the circuit rapidly, is shown at "B." This interrupter is operated or kept vibrating by the magnetism set up in the iron core. It serves to keep the current and flux of the primary continually changing, to accomplish induction.

A condenser is shown at "C." Its purpose is to reduce sparking at the interrupter contacts, and cause a quicker collapse of primary flux when the current is interrupted. The action of such condensers will be more fully explained later.

109. TRANSFORMERS, also operate on this principle of electro-magnetic induction. Transformers are used to increase or decrease the pressure or voltage of electric circuits, for many purposes. They range in size from the little bell ringing type, to those of several kilowatts capacity, located on the poles and supplying power and light current to our homes; and on up to those of many thousands of kilowatts, for the high voltages of our great power transmission lines.

In Fig. 11, is shown a simple transformer illustrating in general the construction and principle of all common types. Here the primary and secondary coils are wound on opposite legs of a closed iron core. This core serves to carry the flux of the primary, over to the secondary coil. Such transformers operate on alternating current, so they do not need an interrupter, as alternating current is continually reversing in direction, and varying in amount. As the current in the primary coil reverses, and increases and decreases, its flux whips back and forth across the turns of the secondary, inducing alternating current in them.

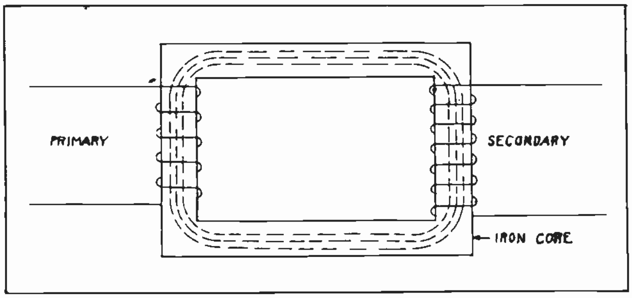

Fig. 11. Core and windings of a simple transformer.

Transformers of various types will be covered thoroughly in a later section, but be sure to obtain a good knowledge of this principle of electro-magnetic induction, as you will use it in many ways in your work from now on.

Now if you have studied carefully and thoroughly each part of this elementary section, you can feel that your time has been very well spent. Nothing is so essential to the practical man as a good general knowledge of the fundamental and important principles of electricity, covered in this section.

With a good understanding of these things you can proceed into the following sections and easily understand them. You will also find that some of these same simple principles will clear up many trouble shooting and operating problems in the field, that would otherwise be very mysterious and difficult. This is where the trained man has the advantage, and is well repaid for all his efforts and study, by being able to solve the problems that stick many an "old timer."

COYNE
Electrical School
CHICAGO ~ ~ ILLINOIS
ESTABLISHED 1899

ELECTRIC SIGNAL SYSTEMS AND CIRCUITS

Section One

SIGNAL SYSTEMS AND CIRCUIT WORK

Great Opportunities In Signal Field

The field of electric signalling is a very broad one, covering everything from simple door bells and call systems to elaborate burglar alarm, telephone and railway signal systems.

Every year many millions of dollars are spent in new installations and expansions in these branches, creating new jobs for several thousand more trained men yearly.

There are millions of homes with their door bell systems and some of them with burglar alarm equipment to be maintained, and hundreds of thousands more homes being built each year.

Hotels, office buildings, department stores, theatres and hospitals have elaborate signal systems. Banks, stores, and offices have their burglar alarm systems. Fire and police departments also have special signal networks.

Then there are the railroads with their block signals and crossing alarms, and the newer automatic train control equipment, to provide greater safety in the operation of trains.

The telephone and telegraph field is one of the largest branches of the electrical industry and employs many thousands of trained electrical men. So you see the general field of signal work is far greater than many people realize, and offers interesting work at good pay in all parts of the country, and also splendid opportunities for a business of your own.

Many men entering electrical work overlook this branch, thinking it is of small importance because of the small size of the equipment, and the low voltage it uses.

This however is a great mistake, and signal wiring and maintenance should not be overlooked just because one may be interested in wiring or power work.

You may plan or hope to have a business of your own some day, but feel that it takes a great amount of capital to start it.

This is one of the particular advantages of bell and alarm work.

It requires but very little capital to start a business in this line, and many of our graduates are making big money specializing in this work in a business of their own. Others, who are working at some other line of electricity, do alarm and bell wiring jobs as a side line, and make a nice bit of extra money. Often in this way they gradually build up a full time business of their own.

Signal work of any kind requires a good knowledge of blue print reading and circuit tracing and testing, and needs men who know definite methods of wiring equipment from a print, and how to systematically "shoot trouble."

Even though you may not specialize in signal work, and no matter what line of electrical work you follow, the principles of these signal systems and the knowledge of circuit tracing and testing this section gives you will be very necessary and valuable.

The general electrician or foreman often encounters a job of installation or repair on some signal system, even though his principal work is on power equipment.

So make a very careful study of every part of this section if you wish to qualify for a real success and the bigger jobs.

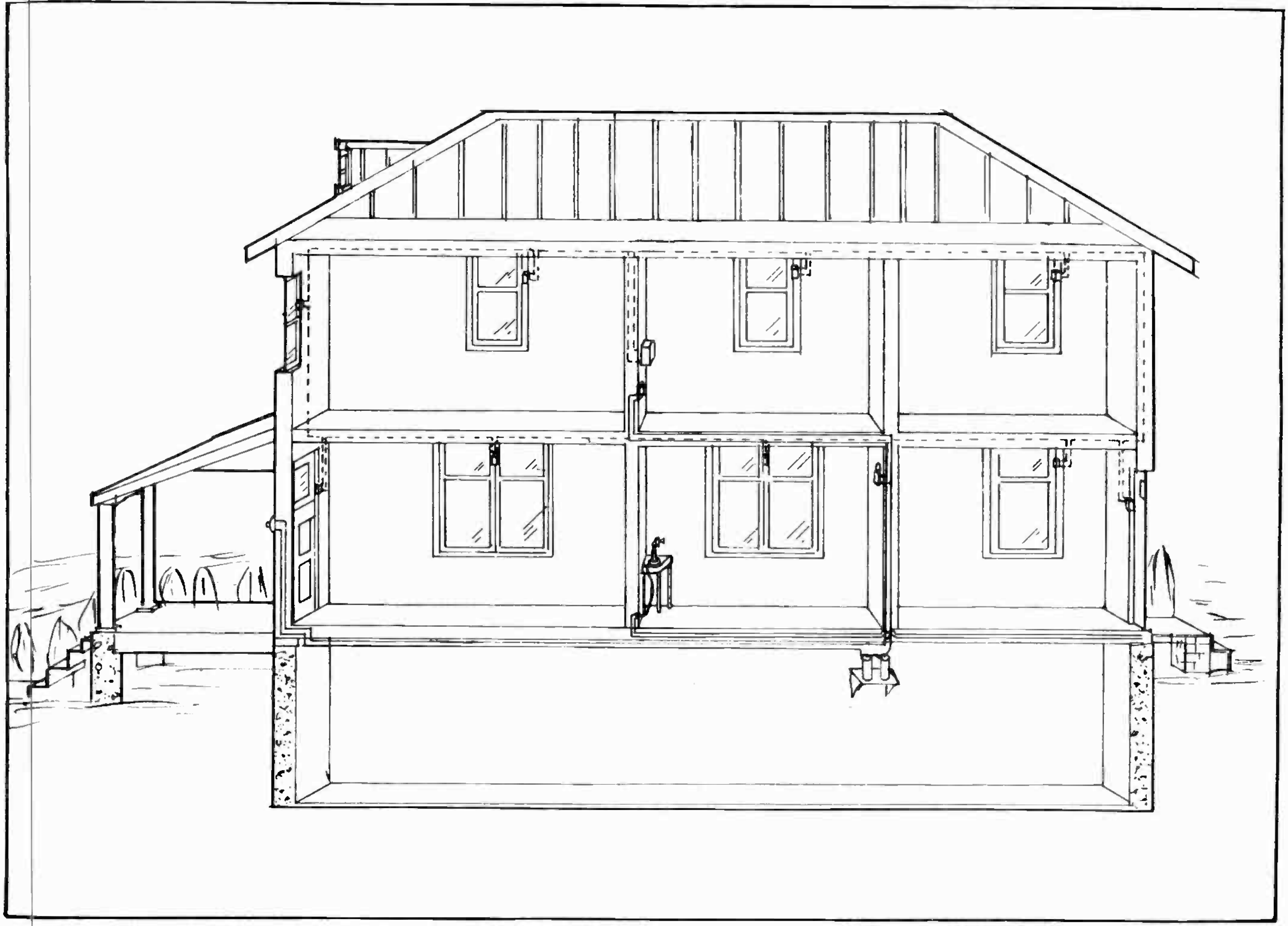

Sectional view of a house showing the wiring for doorbells, burglar alarm and telephone. These are three of the most common signal conveniences in the home.

CALL AND SIGNAL SYSTEMS

In obtaining a knowledge of signal systems, we have to deal with the equipment or devices used, and also the circuits or methods of connection.

There are a number of very interesting devices used in this work and we want to become thoroughly acquainted with the operation, care, and purpose of each. With this knowledge and a good understanding of fundamental circuits you can lay out and install most any common signal system.

The more common pieces of equipment are batteries or transformers, switches of various types, bells, buzzers, relays, drop relays, annunciators, etc.

The circuits are series or parallel, which you already know something about, and "closed" and "open" circuits, which will be explained later.

1. SIMPLE CALL BELL

One of the simplest of all signal systems, is the ordinary door bell or call bell.

Such an installation requires an ordinary bell, a dry cell, a switch, and a few pieces of wire as shown in Figure 1.

Note how the three devices are connected together in a simple series circuit. One wire leads from the positive terminal of the cell to the right-hand bell terminal, one from the left bell terminal to the switch, and one returning from the switch to the negative cell terminal, thus completing the electrical circuit when the switch is closed.

In an actual installation, of course, these wires would be much longer, as the button would be located at the door, and the dry cell and bell probably near together somewhere in a rear room of the house.

Or this same system can be used for an office call with the button located on a certain desk, and the bell at another desk or office where a party is to be called. The battery can be located at either end of the circuit, equally well.

This circuit can also be used for a shop call, or a burglar alarm or fire alarm, by replacing the push button switch with a special door or window switch, or thermal switch, all of which will be explained later.

So we find that this very simple system has a variety of valuable uses.

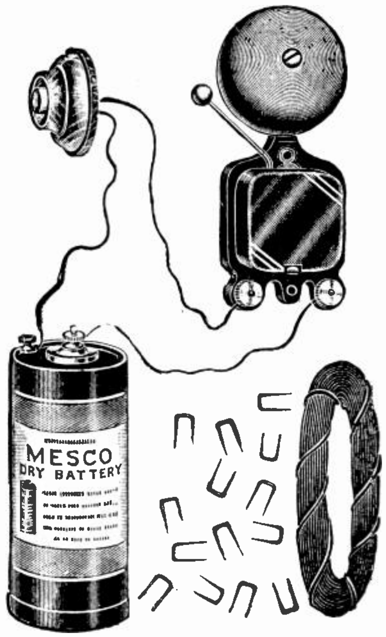

Fig. 1. Materials and parts for a simple doorbell or call system. Note how the dry cell, bell and button are connected.

2. USE OF PLANS AND SYMBOLS

When the equipment for any signal system is pictured as in Fig. 1, it is of course easy to recognize each part, and also to connect the wires as shown. But we must have some form of plan or sketch to do such work from, that can be made quicker and cheaper than photographs. So we have certain little marks or signs which we use to indicate the different pieces of equipment in blue prints or job plans and sketches. These marks are called **Symbols.**

As practically all new electrical installations now-a-days are made from prints or plans, the man who knows these symbols and can read prints has a great advantage over the untrained man who cannot.

In Figure 2 is shown a simple sketch of the same door bell system as in Figure 1.

This sketch uses the symbols for the various parts, and can be quickly and easily made, and also easily understood, with a little practice.

The part marked "A" is the symbol for a cell, the long line representing the positive terminal at which the current leaves, and the short line the negative terminal. "B" is the symbol for the bell, and "C" for the switch.

The heavy top line of the switch represents the movable contact. The arrow underneath represents the stationary contact. Note that the arrow does not touch the upper part, showing that the switch is open as it should be normally. Imagine that you were to press down on this top part causing it to touch the arrow and close the circuit. Current would immediately start to flow from the positive cell terminal to the bell, and back through the switch to the negative side of the cell. The arrows along the straight lines, representing wires, show the direction of current flow.

In **Reading** any electrical diagram from now on, practice **Tracing Out** the current flow in this manner. First locate and recognize all the parts by their symbols, and if there are any open switches, imagine that you close them. Then starting at the battery, trace the current flow along the wires and through the devices, always returning to the opposite side of the battery from the one at which you started. Remember that unless you have such a complete circuit no current will flow.

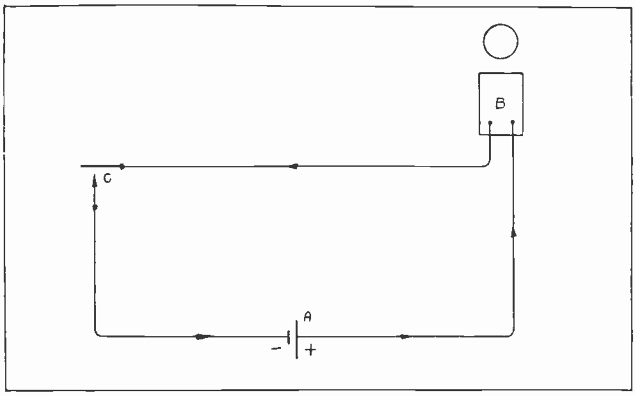

Fig. 2. Sketch showing the connections and circuit of simple doorbell system.

3. COMMON DEVICES IN SIGNAL CIRCUITS

Now let's find out more about each of the devices used in this simple system just covered, and also others.

We can readily see that the principal parts which we must have for any electric signal system are a source of current supply, a means of control, and a device to transform the electric energy into a signal.

4. BATTERIES FOR CURRENT SUPPLY

Dry cells are very commonly used to supply current to ordinary door bell and call systems of the "open circuit" type, where current is only required for occasional short intervals. Figure 3 shows two dry cells. You are already familiar with the care and operation of these cells from a previous section. (Elementary Section 6, Article 68.) When two or more cells are used they can be connected series or parallel according to the voltage and current requirements of the signal device. These connections were also covered in a previous section on Series and Parallel Circuits. Figure 4, however, shows two groups of three cells each, one group connected series, and the other parallel.

Dry cells should not be used in closed circuit systems, except where the current requirements are exceedingly small.

Primary cells of the "gravity" type or the "Edison" type are often used in closed circuit systems because they will stand the continuous current requirements much better than dry cells. The operation and care of these cells were also covered in a previous section. (Elementary Section 6.)

Fig. 3. Two common dry cells such as used extensively in signal systems. One is cut away to show terminal strip attached to the zinc.

Storage batteries are often used in signal systems where the current requirements are quite heavy. Their care and charging will be covered later.

5. MOTOR GENERATORS FOR SIGNAL SYSTEMS

In very large signal systems **Motor-Generator** sets are often used.

These consist of a motor operated from the usual 110 or 220 volt current supply in a building, and driving a generator which supplies the low voltage D.C. to operate the signals. (See Figure 5.)

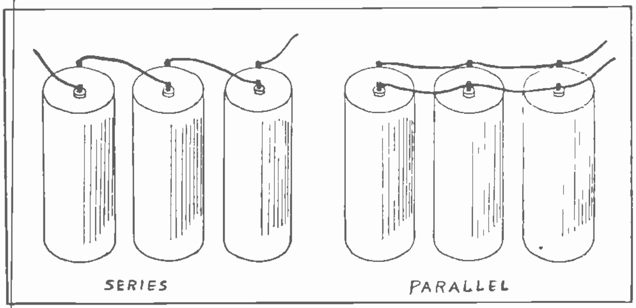

Fig. 4. Sketch showing method of connecting groups of dry cells in series or parallel, to obtain proper voltage or current for various signals.

Storage batteries are often used with motor generators, to supply current for short periods when the motor-generator might be shut down.

Figure 6 shows a storage battery connected in parallel with a D.C. generator so that the generator, while operating, will keep the battery fully charged. Then, when the generator is stopped for any reason, the battery supplies the current to the signals. The generator should be disconnected from the battery when it is stopped, so the battery will not discharge through the generator winding.

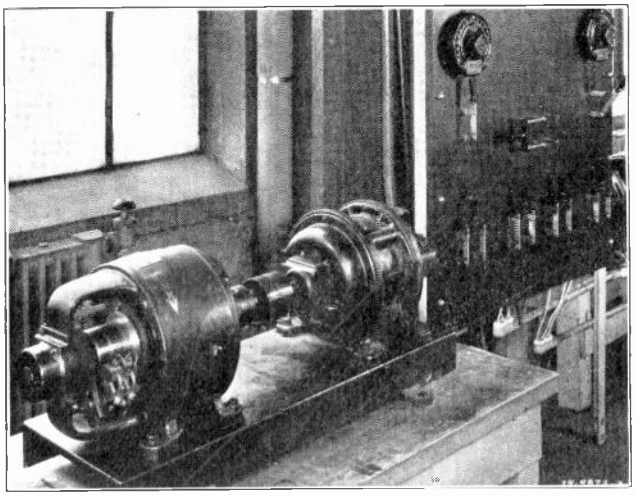

Fig. 5. Photo of low voltage motor generator set and switchboard, used for supplying energy to large signal systems.

6. BELL TRANSFORMERS

Bell Transformers are very commonly used to supply current to ordinary door bell and simple call systems. These transformers operate from the 110 volt A.C. lighting circuits and reduce the voltage to that required for the signal bells or lamps.

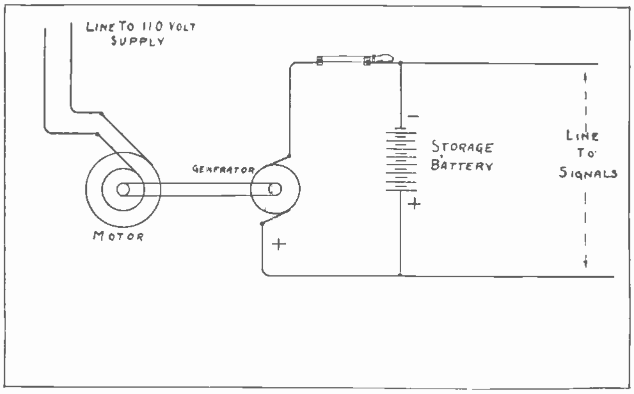

Fig. 6. Diagram of motor generator and storage battery connected together for dependable energy supply to large signal ystems.

Figure 7 shows two common types of door bell transformers.

A number of these transformers have three secondary wires, or "leads," giving 6, 8, or 14 volts with different connections. Others give still higher voltages. Where higher voltage bells or lamps are used, or where the line is long, the higher voltage "leads" on the transformer should be used.

In Figure 8 is shown a sketch of the windings and connections of a very common type of bell transformer. The primary winding "P" consists of about 1800 turns of No. 36 wire. The secondary winding consists of 235 turns of No. 26 wire, and has a "tap" or connection at the 100th turn. The core legs are about ½ in. x ¾ in. in size and 2¼ in. long.

Transformers can only be used where there is electric supply in the building, and only on A.C.

They will not operate on direct current supply, and in fact, will "burn out" quickly if connected to a D.C. line.

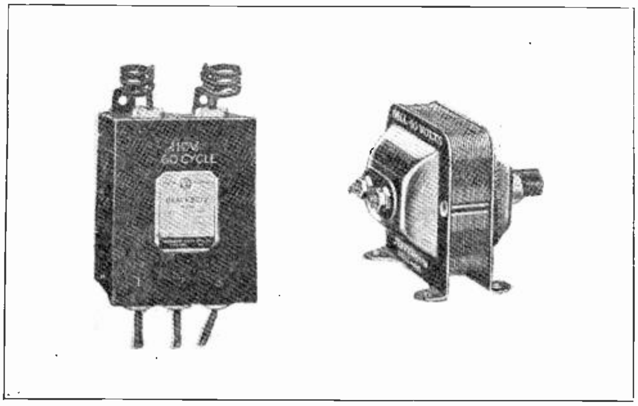

Fig. 7. Two different types of low voltage bell transformers. These reduce the voltage of an A. C. lighting circuit to 6, 8, and 14 volts for operation of bells.

For special uses transformers are obtainable with taps and a switch to vary the voltage in a number of steps. One of this type is shown in Figure 9.

Several other types are shown in Figure 10. Two of these, on the left, are mounted right on covers of "outlet boxes" for convenience in installing and attaching them to the lighting circuits, which are run in conduit, or protective iron piping. The other is built in a box with fuses.

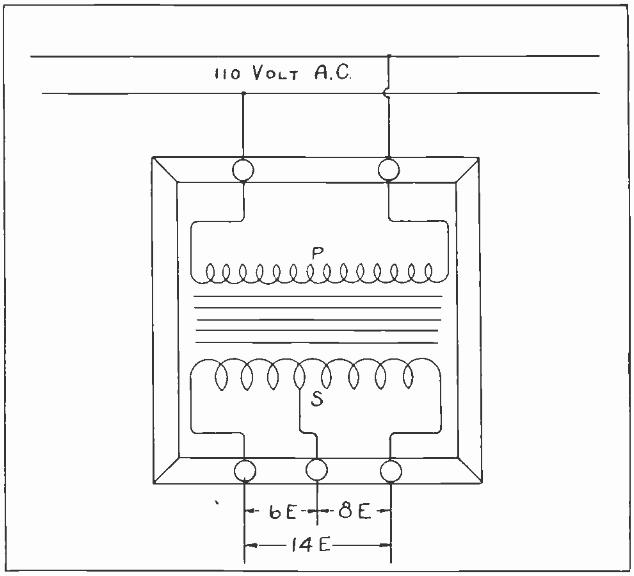

Fig. 8. Sketch showing windings and connections of a bell transformer.

All of the various sources of current supply above mentioned are low voltage devices, usually furnishing from 6 to 20 volts, as most bells and signal lamps are made to operate at these low voltages. Special bells are made, however, for 110 volt operation. But a low voltage bell should never be connected directly to a lighting circuit, as it will immediately burn out, and possibly blow the fuses or do other damage.

Certain types of signal systems using relays cannot be operated satisfactorily with transformers, as they require the continuous pull of D. C. on the relay magnets. Batteries or motor generators are required for such systems.

7. CURRENT SUPPLY TROUBLES

When signal systems fail to operate, the trouble can very often be traced to a weak or dead battery, burned out transformer, or blown fuse in the lighting circuit to which the transformer primary is connected. Cells and batteries can be quickly and easily tested right at their terminals with a bell or buzzer, low reading voltmeter, or battery ammeter.

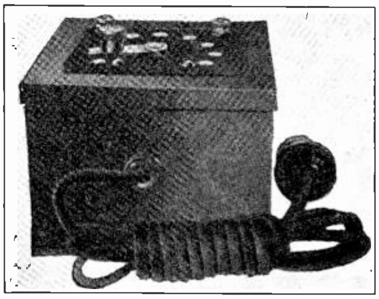

Fig. 9. Low voltage transformer with "taps" for obtaining various voltages.

A transformer can be tested with a bell, buzzer or low voltage test lamp for the secondary test, or a 110 volt test lamp for the primary test.

When "shooting" trouble on any defective signal system, you should never fail to check the source of current supply first of all.

8. SIGNAL SWITCHES

Now that we know something of the different sources of current supply for signal systems, let us consider the means of control or switches used.

Referring again to Figure 2, the purpose of the switch, as we have already mentioned, is to close and open the circuit, and start or stop the current flow, thus causing the bell to ring when desired.

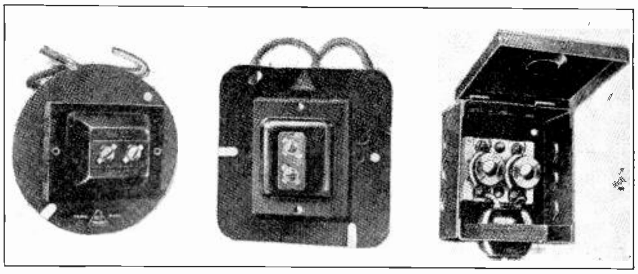

Fig. 10. Three types of bell transformers which are built in the covers of standard outlet boxes for conduit wiring.

This type of switch is called a **Push Button** switch. Figure 11 shows the operating parts of such a switch with the cover removed, and also the assembled switch. The upper left part shows the contact springs, mounted on an insulating base of hard fibre. The short lower contact is called the stationary one, and the longer upper spring is called the movable contact.

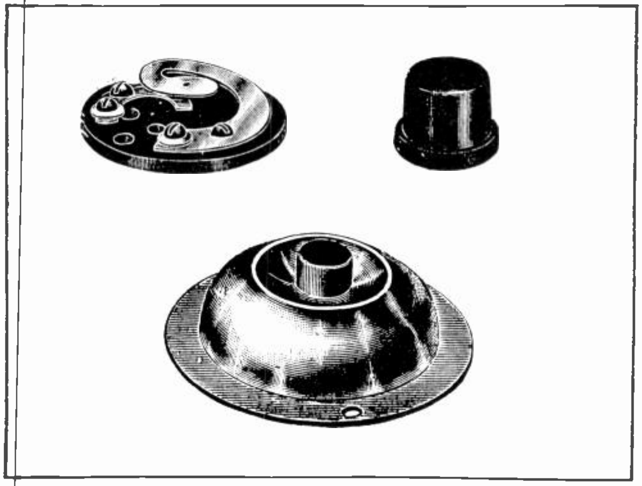

Fig. 11. View showing parts of a push button switch; also completely assembled button below.

When assembled, the button, which is also of insulating material, rests on the large spring and is held in place by the cover, as shown in the lower part of the figure. The springs are so shaped that they normally remain separated from ⅛ in. to ¼ in., thus keeping the circuit open. But when the button is pressed it forces the movable spring down onto the stationary one, closing the circuit and allowing current to flow through the switch.

This type of push button switch is called an **Open Circuit Switch,** because it is normally open.

These switches are made for low voltages only, and should never be used for high voltage lighting circuits, or heavy currents, as they may arc and overheat badly.

When connecting such a switch in a circuit, one wire is attached to each of the screws which have the washers under their heads. This fastens one wire to each switch contact.

The two holes in the fibre base are for the wires to pass through, and the switch is held in place by the cover. The button is slipped in the hole in the cover before placing the cover on the switch. Some switches have metal covers that snap on, while others have wood covers that screw on. In addition to this common open circuit switch, we have "closed circuit" and "double circuit" push button switches.

A **Closed Circuit** switch is one that has its contacts normally closed, and some current flowing through it all the time except when it is pressed.

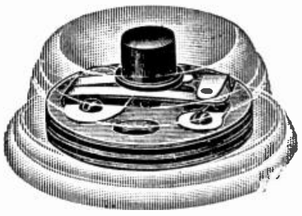

Fig. 12. Double circuit push button switch, showing clearly the arrangement of contacts and parts with respect to base and cover.

9. DOUBLE CIRCUIT SWITCHES

A **Double Circuit** switch is one that has both a closed contact and an open contact, and when pressed it breaks the closed circuit and closes the open circuit.

In Figure 12 is shown a double circuit switch. This switch is used in certain types of signal and alarm systems, where we wish to open one circuit and close another at the same time.

Referring to the figure, you will see that it has a large movable contact, and one open contact underneath, and also a closed contact above the movable spring.

The top spring is called the closed contact because it is normally touching the movable strip, keeping a circuit closed through them until the button is pressed. Then the movable spring leaves the top one and touches the bottom one, opening one circuit and closing the other.

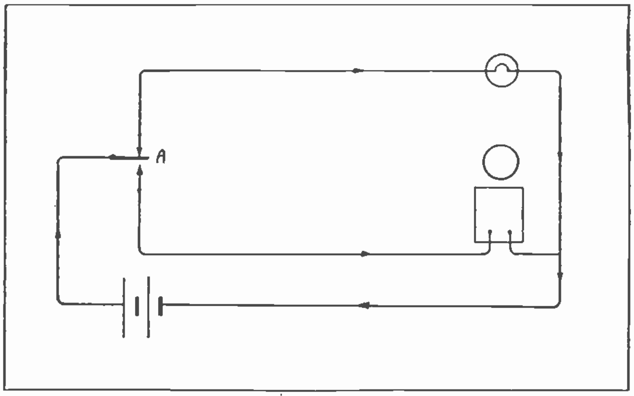

Fig. 13. Connections for a double circuit switch to operate a signal lamp and bell.

Figure 13 shows a double contact switch in use in a signal circuit. Normally the lamp burns continually and the bell is silent until the switch is pressed. Then the lamp goes out and the bell rings. Trace the circuit to note carefully this operation, and notice the symbol used to represent the double circuit switch at "A".

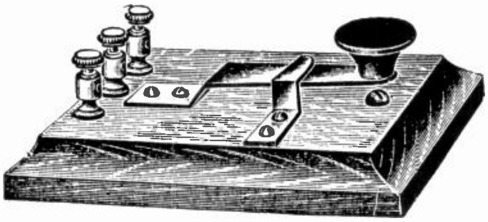

Fig. 14. Different type of double circuit switch, very convenient for code signalling because of its "key-like" construction.

It is quite important, in making a drawing of these switches, to have the top contact closed or touching the movable strip, and the bottom contact or arrow should not be touching, in normal position.

Also remember that in all these switches the movable part is a spring, so it goes back to normal as soon as released.

In Figure 14 is another type of double circuit switch, that has no cover, and is used for indoor work such as desk call systems.

Because of the shape of its spring and button, it is very convenient to use as a signalling key for certain code calls.

With either of the double contact buttons shown, we can remove the bottom contact or leave it unused, and then this switch will serve as a closed circuit switch.

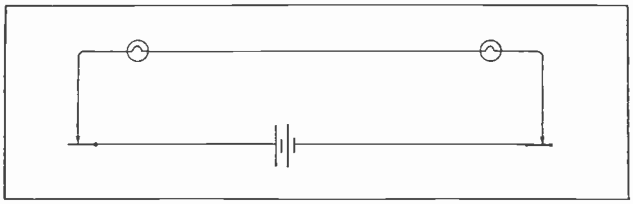

Fig. 15. Two closed circuit switches connected with lamps for a return call signal.

Figure 15 shows a sketch of two such switches used with two lamps, as a signal system for two parties to signal each other at a distance, by blinking the lamps.

Such a circuit should use a transformer, storage battery or gravity battery, because the continual current flow through the lamps would soon exhaust a dry cell.

One definite advantage of such a closed circuit signal system is the fact that any failure or defect, due to a dead battery or broken wire, is more likely to be noticed at once, than it is with an open circuit system. This is often of great enough importance to more than make up for the slight extra current cost.

Push button switches can be obtained with ornamental covers as shown in Figure 16.

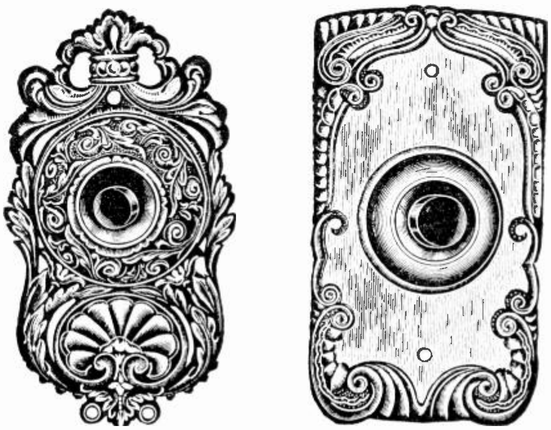

Fig. 16. Two types of ornamental covers for use with push button switches.

10. DESK BLOCKS AND SPECIAL PUSH BUTTON SWITCHES

For desk call systems a smaller push button switch is often required, so a number of them can be located in one small block or panel.

Figure 17-A shows a desk block with five of these small buttons, and marker plates to indicate which call each button operates. Figure 17-B shows a metal panel assembly of 10 switches, such as quite commonly used in office call systems.

In Figure 18 are shown several types of small push buttons that can be mounted in desk blocks, or in round holes drilled in a board or desk.

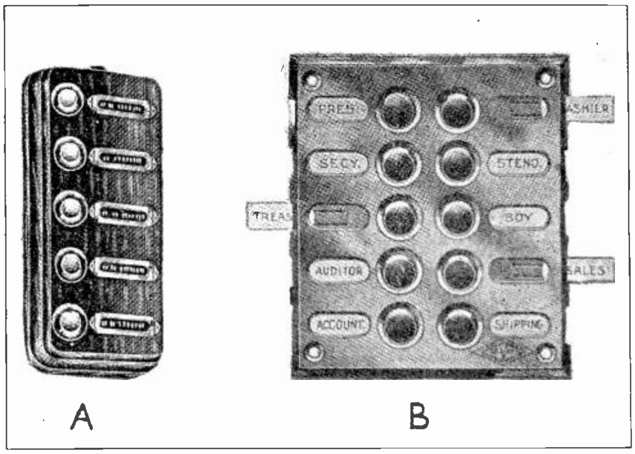

Fig. 17-A. Push buttons arranged in a desk block for office signal systems.

Fig. 17-B. Ten small push buttons with indicator tags, on a panel that can be used for wall or desk mounting.

For hospitals, and certain other uses, a very convenient push button can be arranged on the end of a flexible wire, so it can be laid on the pillow, or moved around somewhat. A button of this type, and also one to be clamped onto a bed or chair are shown in Figure 19.

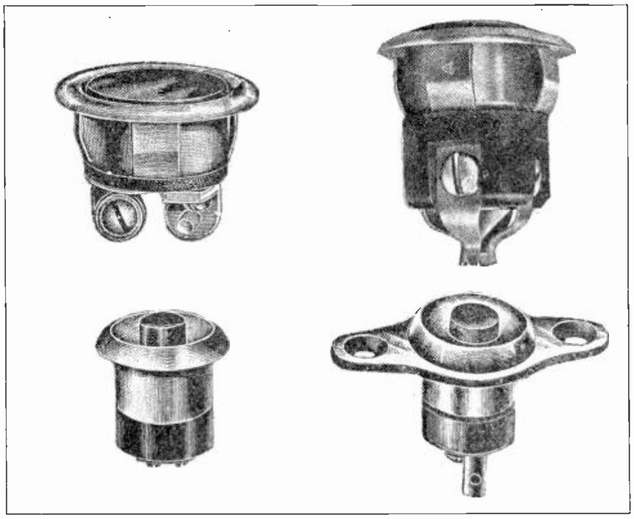

Fig. 18. Four different types of small push buttons for use in desk blocks or panels.

11. BURGLAR ALARM SWITCHES. DOOR AND WINDOW SPRINGS

In burglar alarm work we have special types of switches called **"Window Springs"** and **"Door Springs."** Figure 20 shows three views of common types of window springs which are made to fit in the window casing. These switches can be obtained in either open circuit or closed circuit types. They are mounted in the window casing in such a manner that when the window is closed, its frame rubs on the projecting slide of the switch and holds the switch open, so the bell does not operate. When the window is opened and its frame slides off the switch, the spring closes the circuit and causes the bell to operate. Or the

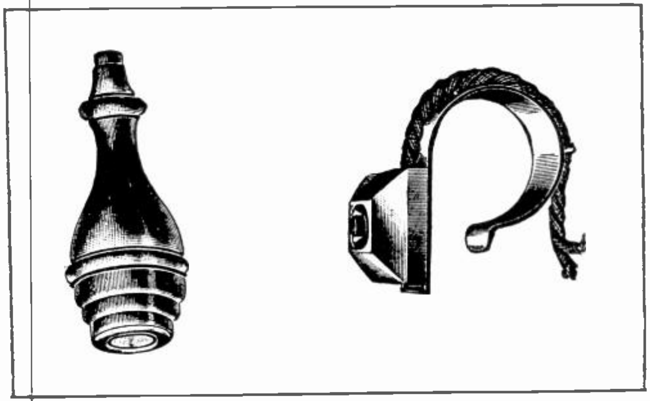

Fig. 19. Two types of push buttons commonly used in hospitals. The one on the left for attachment to pillow cord; the one on the right to be clamped to bed rail or chair arm.

reverse operation takes place where closed circuit switches are used.

Figure 21 shows two door spring switches. The one at the left is a closed circuit switch, and the one at the right is an open circuit type.

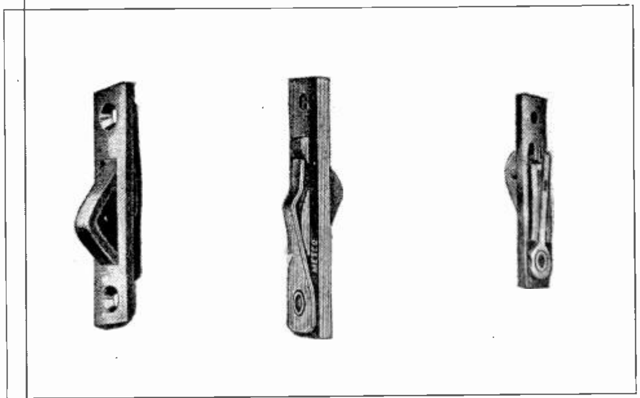

Fig. 20. Three different views of open and closed circuit window springs used in burglar alarm systems.

These switches are installed in the door casing, so that when the door is closed it holds the button compressed, and when the door is opened, the spring pushes the button out and closes or opens the circuit as desired, causing alarm to operate. Window and door springs can be obtained in both closed and open circuit types.

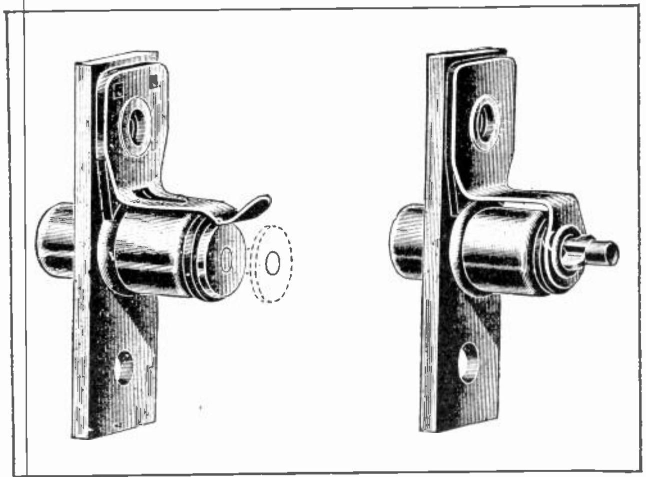

Fig. 21. Door springs of open circuit and closed circuit types to be mounted in door casings for burglar alarms.

Two types of **Door Trips** are shown in Figure 22. This type of switch is to be mounted above the door so that as it opens, the top of the door will strike the suspended lever, causing the bell to operate momentarily.

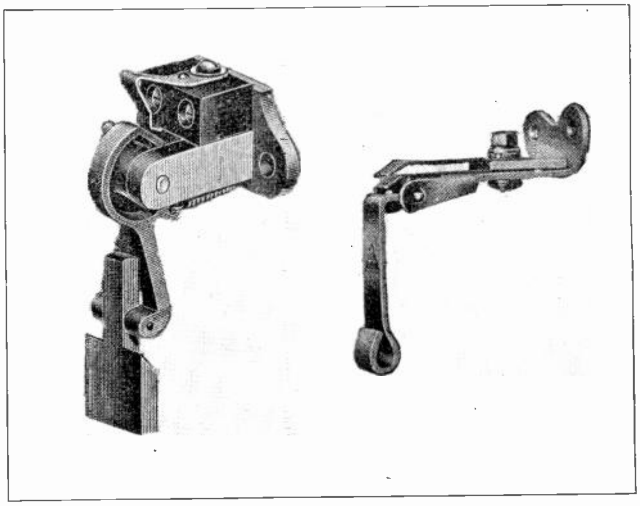

Fig. 22. Door trips to be mounted above a door, and ring a bell as the door is opened.

12. KEY OR LOCK SWITCHES

In burglar alarm systems a lock switch is often used so the owner can turn the system on at night and off during the day, or enter the building without tripping the alarm if he desires. These switches can only be operated with a special key. Figure 23 shows two switches of this type.

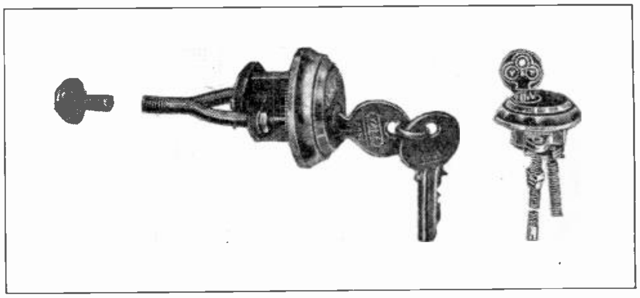

Fig. 23. Burglar alarm lock switches, used to turn the system off during the day, or when the owner wishes to enter the building without sounding alarm.

13. BURGLAR ALARM "TRAPS"

Another type of switch, often called a burglar alarm **"Trap"** is shown in Figure 24. This switch is arranged to be operated by a string attached to the door, window, or device to be protected.

Some of these "traps" will cause the alarm to operate if the lever is moved in either direction from the "set" position.

If the string is pulled it moves the lever in one direction, making contact on that side. If the string is cut, it releases the lever and a spring moves it in the opposite direction, making a contact on that side.

14. FLOOR SWITCHES

Often it is desired to have a signal system that can be operated from a concealed floor switch, under a carpet or rug. A switch of this type is shown in Figure 25-A. Pressure on any part of this switch will close a circuit through it, and operate a bell or other signal. Figure 25-B shows a special burglar alarm matting which is equipped with wires and contacts, to cause a bell to ring when the mat is stepped on.

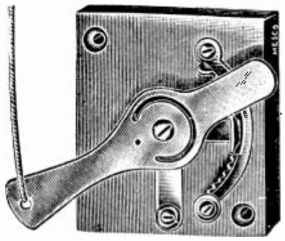

Fig. 24. Burglar alarm trap or switch to be operated by a string attached to door, window, or other object.

15. THERMAL OR HEAT SWITCHES

Another very interesting type of switch is the **Thermostat** type. One of these is shown in Figure 26. This switch is caused to operate by changes in temperature, and makes use of the different rates of expansion of different materials when they are heated. In the type shown here a strip of brass and one of hard rubber or composition are riveted together. When heated, the rubber or composition strip expands much faster than the brass, causing the whole strip to warp or bend downwards and close a circuit with the lower adjustable contact. When the strip is allowed to cool the contraction of the top strip causes the whole element to bend upwards again, and break the connection with the lower contact. If cooled beyond a certain point, it will bend upward still farther and close another circuit with the top adjustable contact.

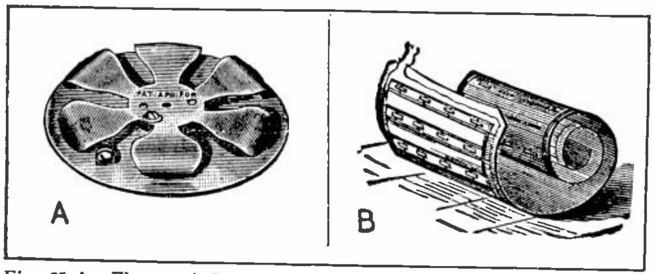

Fig. 25-A. Floor switch for use under carpets, near tables or desks.
Fig. 25-B. Burglar alarm mat to be placed under door mats or rugs, and close a circuit when stepped upon.

These thermostatic switches are made in several different styles, and are used in fire alarm systems, or to indicate high or low temperature in ovens, refrigerators, storage rooms and various places, by operating a bell or signal when certain temperatures are reached. Some of their applications will be more fully described later.

So you see there are switches for almost every need in signal work, but all are simply devices to open and close a circuit.

Switches for special alarm or signal needs can often be easily and quickly made from two or more strips of light spring brass mounted on a piece of wood or other insulation, and bent to the proper shapes.

A few other types of switches are shown in Figure 27. Snap switches of the type used in lighting circuits are sometimes used in signal circuits also.

16. SWITCH TROUBLES AND TESTS.

Some of the mysterious little troubles that cause failure of signal systems are often right at the switches, and nothing more than a loose connection, or dirty or burned contacts. Or possibly some small piece of insulating material such as a bit of string or fuzz from the wire insulation, or a bit of wood or sand, stuck to one of the contacts. A sure way to test any switch is to connect a dry cell and buzzer, or low voltage lamp, directly across its terminals; and then press the switch a number of times. If it does not operate the lamp or buzzer every time it is pressed, its contacts should be thoroughly cleaned with sandpaper, knife, or fine file, and its terminals carefully tightened. Remember a very small object or amount of dirt offers enough resistance to prevent current flow in low voltage circuits.

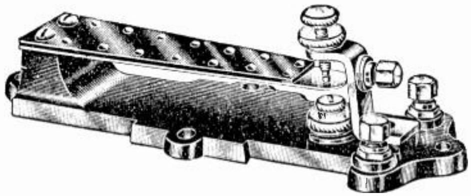

Fig. 26. Thermostatic switch which closes its contacts when heated, and is used in fire alarm systems.

We have seen many an "old timer" or electrician with considerable experience sweat and worry over something of this same nature. But with a knowledge of circuit principles, Ohms Law, and these simple definite tests, such troubles can be "cornered" and need not be so mysterious to the man with training.

Now that you understand the common types of switches or devices for controlling signal circuits, we will take up the bells and devices for producing the call or alarm.

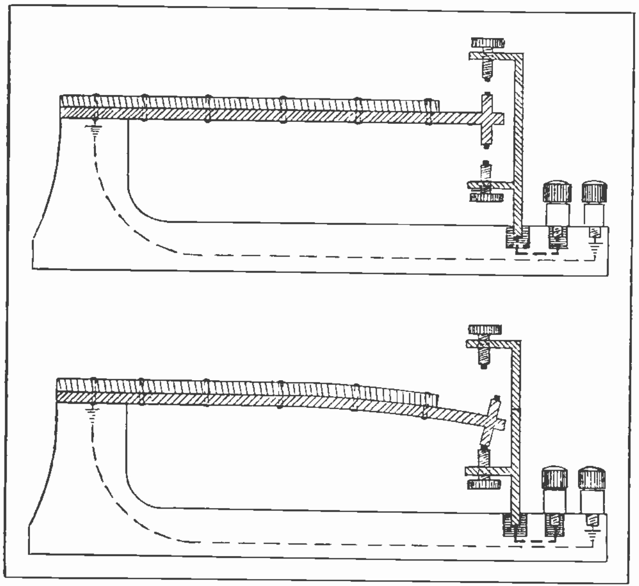

Fig. 26-B. Two sketches of thermostatic switch, showing the strip in normal position in the upper view, and warped to close the contacts in the lower view. Note how the circuit is completed through the metal frame of this device.

17. SIGNAL BELLS AND LAMPS

The purpose of any signal or alarm system, is to call the attention of someone. To do this we can use either an "audible" or "visible" signal, or quite often a combination of both. By an audible signal, we mean one that creates sound loud enough to be heard by those whose attention is desired. Bells, buzzers, and horns are used for this purpose. Visible signals are those that are to attract the eye, such as lamps, or semaphores. The term "semaphore" means a sort of moving flag or shutter.

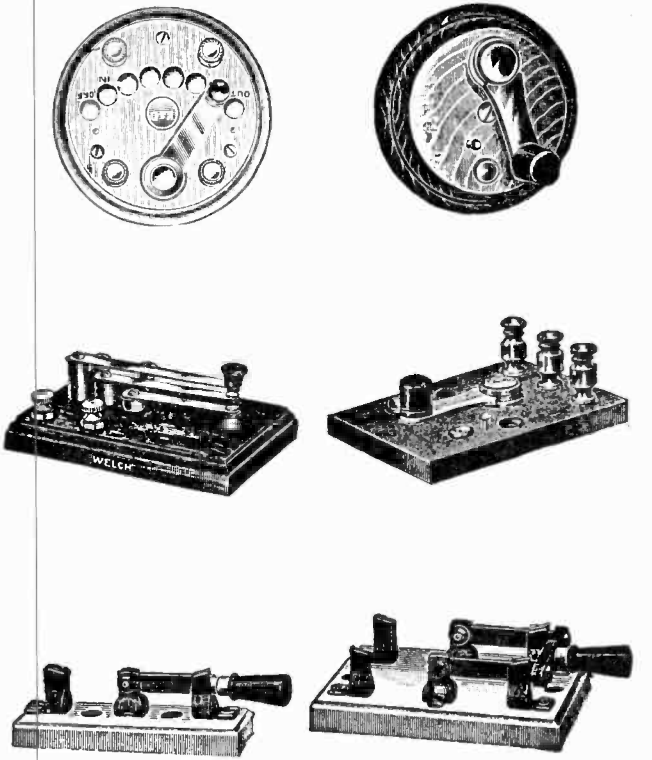

Fig. 27. Several different types of switches used in signal work. The two above are called Lever Switches. In the center on the left is a Multiple Key Switch; at the right double circuit Lever Switch. Below are two Knife Blade Switches.

Visible signals as a rule can only be used where they are in front of, or in line with the vision of those whose attention is desired, and are most commonly used where an operator or attendant is watching for them continually.

Electric bells are very commonly used in all types of signal systems.

Their construction and operation is quite simple and yet very interesting, and important to know.

18. VIBRATING BELLS.

There are several different types of bells, but the **Series Vibrating Bell** is the most commonly used of any. Figure 28 shows a good view of such a bell with the cover removed, showing the coils and parts.

Examine this carefully and compare it with Figure 29, which is a sketch of the same type of bell, and shows the electrical circuit and operating principle clearly. Note how easy it is to recognize each part in the photo, from the simple symbols in the sketch, and how the sketch really shows some things more clearly than the actual photograph. "A" and "A" are the bell terminals to which the wires are fastened. "B" "B" are the cores and coils or electro-magnets, which attract or operate the armature "C". "D" is a spring which supports the armature and also pulls it back every time the magnets release it. "E" is the end of the same spring, on which is mounted a piece of special alloy metal, which serves as a contact to close a circuit with the adjustable screw contact "F". These form the **Make and Break Contacts,** and are very necessary in the operation of the bell. "G" is the frame of the bell, "H" is the hammer which is attached to the armature, and strikes the gong "I", when the magnets attract the armature.

When a battery is connected to terminals "A", "A", current at once starts to flow through the bell. If the positive battery wire was attached to the left terminal, current would flow up through the armature, which, of course, is insulated from the frame, then through the "make and break" contacts, through the coils and back to the right hand terminal and the battery. As soon as current flows through the coils, the magnets attract the armature, causing the hammer to strike the gong, and also opening the "make and break" contacts. This stops the flow of current, demagnetizing the coils and releasing the armature. As soon as it falls back and closes the contacts, the magnets pull it away again. This is repeated rapidly as long as current is supplied to the bell; thus it is called a **Vibrating Bell.**

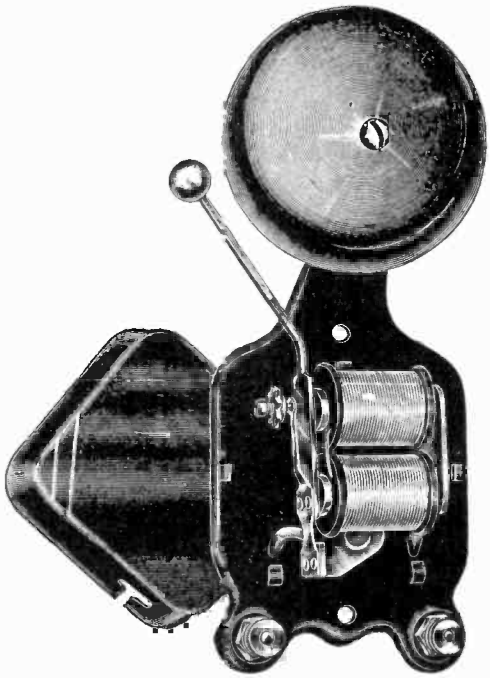

Fig. 28. View showing common vibrating bell with cover removed. Note carefully the construction and arrangement of coils, armature, and contacts.

19. BELL TROUBLES

Most of these bells have their coils wound for 6 to 10 volts, and should not be operated on much

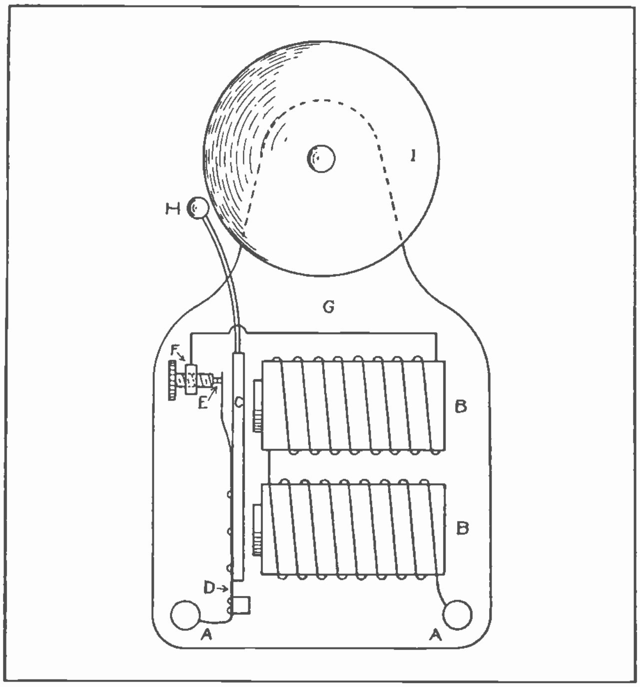

Fig. 29. **Sketch showing electrical circuit and connections of common vibrating bell. Observe very carefully the parts of this diagram, and the explanation given.**

higher voltage or the coils will overheat and burn their insulation off, which destroys them.

Most vibrating bells are made for short periods of operation only, and should not be allowed to operate continuously for long periods, or the arc at the contacts will heat and burn them. If these contacts become badly burned or dirty, they should be cleaned and brightened with a thin file. When a vibrating bell refuses to operate the trouble can usually be found at these contacts, or a loose terminal nut, or poorly adjusted armature spring.

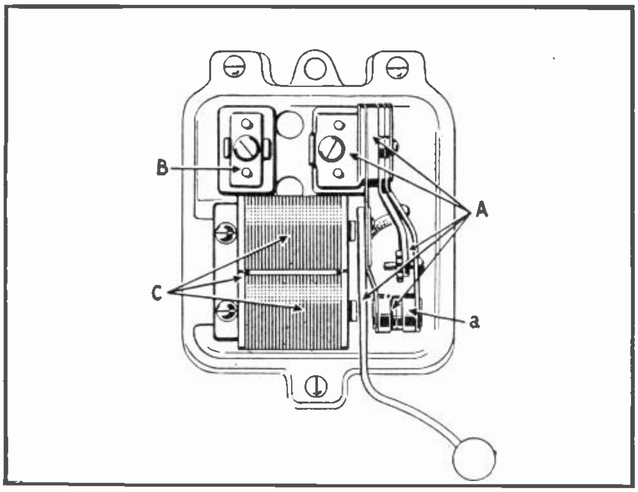

Fig. 30. **Heavy duty bell frame and parts. Note the extra heavy carbon contacts for making and breaking the circuit at "A."**

When the contacts are worn out, they can be replaced on the more expensive bells, but on the cheaper bells it is difficult to remove them and the bells can be discarded more economically, because of their very low cost.

In the more expensive bells, the contact points are faced with platinum, silver or special alloys that resist corrosion and burning, as even a very small amount of burned metal or dirt in these contacts will prevent the operation of the bell.

In some vibrating bells both terminals are insulated from the frame by little fibre sleeves and washers, and must be kept so.

If this insulation becomes defective the current is shorted through the frame and the bell will not operate. Other bells have only one terminal insulated, and the other is intentionally grounded to the frame, passing the current through the frame to the armature, which in this case is also grounded to the bell frame.

Sometimes the hammer of a bell becomes bent so it will not touch the gong, or rests too tight against it, stopping the proper operation of the bell.

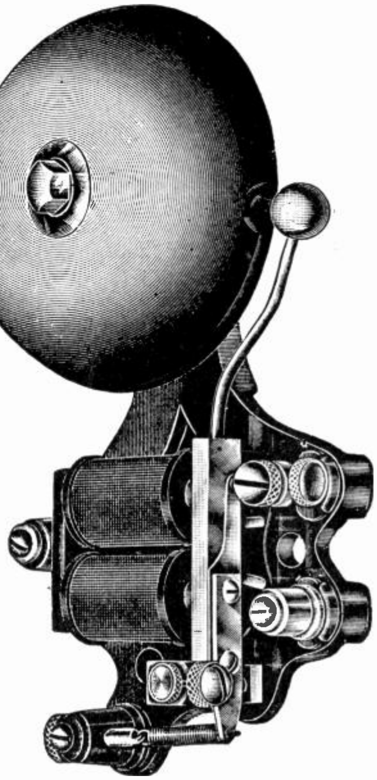

Fig. 31. **Ruggedly constructed heavy duty bell. Bells of this type are often wound for 110-volt operation, and used where a very loud signal is desired.**

A good undersanding of the parts and operation of these bells will enable anyone with a little mechanical ability, to easily locate and repair their most common troubles.

In Figure 31, is shown one of the larger types of vibrating bells which are often wound for 110 volt operation.

Series vibrating bells will operate on either D. C. or A. C. as it does not matter which way current flows through them; the magnets will attract the armature just the same. For this same reason, it makes no difference which way a battery is connected to these bells, as far as polarity is concerned.

20. SINGLE STROKE BELLS

Sometimes it is desired to have a bell that will give single taps each time the button is pressed, instead of the continuous vibration.

Such a bell is called a **Single Stroke Bell.** Figure 32 shows a sketch of a bell of this type. The only difference between this and a vibrating bell is that it has no make and break contacts, and therefore cannot vibrate. Each time the button is pressed and current supplied to this bell, its hammer strikes one tap on the gong. As long as the switch is kept closed the magnets hold the hammer quietly against the gong, after the first tap. When the switch is opened the hammer drops back ready for the next stroke.

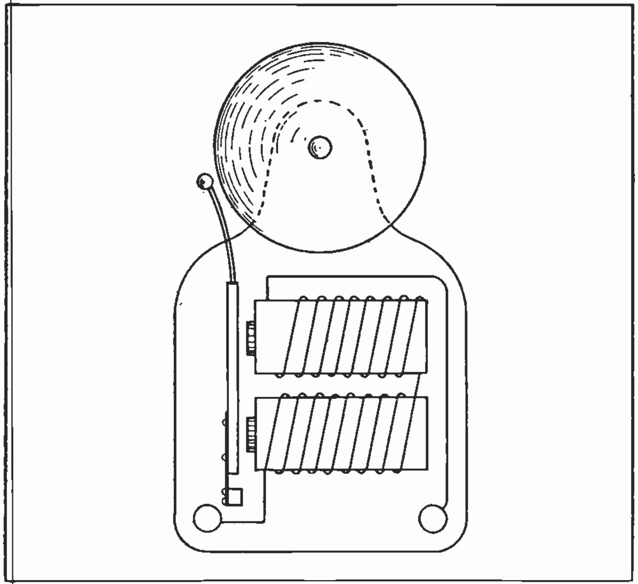

Fig. 32. Circuit diagram of a single stroke bell. Note that it does not have any "make and break" contacts.

These bells are very good for code calling, where a certain number of distinct strokes are used for each different call. They should be operated on D. C., as alternating current will cause the hammer to chatter slightly if held against the gong. This is due to the regular variations in value of alternating current.

21. COMBINATION BELLS

There are also combination bells which are arranged to be used either vibrating or single stroke.

Figure 33 shows a sketch of such a bell connected to a battery and two switches, to be operated either as a single stroke or vibrating bell as desired. If button "A" is pressed, the current will flow directly through the coils without having to pass through the make and break contacts at "C", and the bell will operate single stroke. The arrows show the path of current flow, during single stroke operation. If button "B" is pressed the current will flow through the armature and make and break contacts, and then to the coils, and the bell will vibrate because the magnets can now break the circuit rapidly as they pull the contacts apart at "C".

In emergencies or when a combination bell of this type cannot be obtained conveniently, you can easily convert an ordinary vibrating bell to single stroke or combination operation, by attaching an extra wire to the stationary contact of the breaker. See Figure 34, and the extra wire "A".

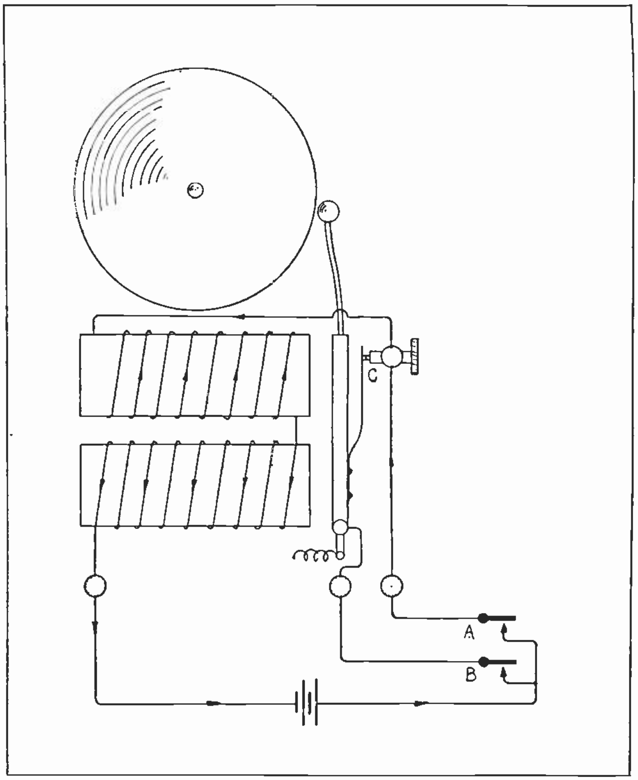

Fig. 33. Connections for a combination bell to be used either single stroke or vibrating. Trace this circuit carefully.

There are several other types of bells that are slightly different from the series vibrating type with principles very similar, but they are little used and can be easily understood with a little close observation and a knowledge of general principles covered here.

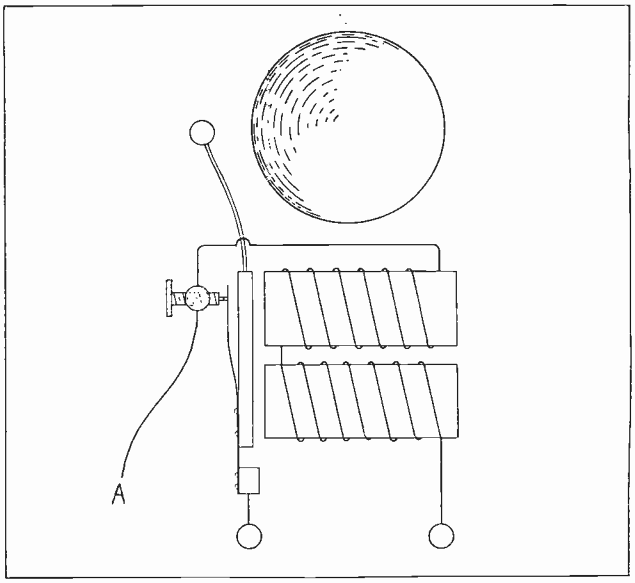

Fig. 34. Sketch showing method of attaching an extra wire to the stationary contact to convert an ordinary vibrating bell for single stroke or combination operation.

Another type of bell used extensively in telephone work, and operated on alternating current, will be taken up in a later section.

22. SIGNAL BUZZERS

In certain places such as hospitals and offices where noise is undesirable, a bell is too loud, and some device to give a softer note is needed.

For this purpose we have buzzers. These buzzers are almost exactly the same in construction and operation as the bells, except that the hammer and gong are left off entirely. The vibration of the smaller and lighter armature makes a sort of low buzzing sound which is sufficient to attract the attention of anyone near it. Figure 35 shows a common type of office buzzer enclosed in its metal case, and Figure 36 shows a sketch of the electrical circuit and parts of this buzzer. Buzzers can be obtained in different sizes, and some have an adjustment screw on them to change the tone and volume of sound. Figure 37 shows four buzzers of different sizes.

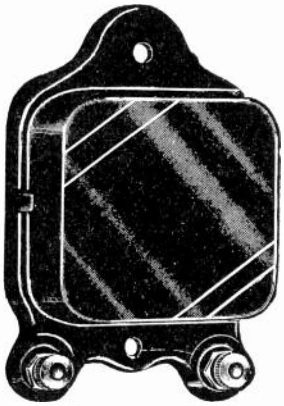

Fig. 35. Common office type buzzer, very similar to a vibrating bell, except that it has no hammer or gong.

23. "MUFFLING" OF BELLS

Sometimes when a buzzer is not available it is desirable to partly silence a bell, without putting it out of service entirely. This can be done by plugging the back of the gong with paper, or by removing the hammer ball, or bending it back so it does not strike the gong.

24. CARE AND TESTS OF BELLS AND BUZZERS

When any bell or buzzer fails to operate, a quick test to find out whether the trouble is in the bell or some other part of the circuit, can be made by connecting a cell or battery of proper voltage directly to the bell terminals.

If the bell does not operate then, be sure its terminals are tight, and its armature free to move. Clean the make and break contacts carefully with a thin file, or fine sand paper, and you will probably cure the trouble. If it still does not operate, examine the coils and the wires leading to them and, if necessary, test the coils as explained in previous sections. Usually the trouble will be found at the contacts, loose terminals, or armature adjustment.

25. SILENT SIGNALS

In some places an entirely silent signal is desired, and a visual indication is used instead of a bell or buzzer.

For this purpose we have low voltage signal lamps of various types. These can be obtained in voltages from two to twenty, and with colored bulbs, in white, red, blue, green, amber, etc. The different colors can be used to indicate different signals or to call different parties.

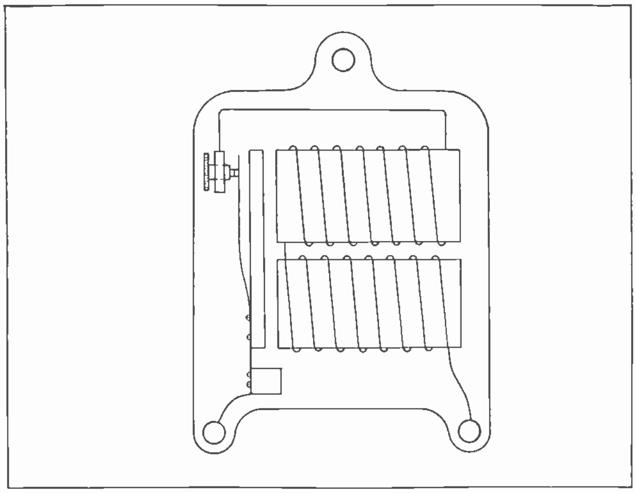

Fig. 36. Sketch showing coils and circuit of a buzzer of the type shown in Fig. 35.

Some of these lamps can be obtained with miniature threaded bases, to screw into small porcelain sockets, and can be conveniently located most anywhere desired. Others are made in special sizes and types, such as those used in telephone switchboards, etc.

When regular signal lamps are not available, automobile lamps and flashlight lamps can often be used to good advantage.

In many cases both a lamp and bell are used, or a lamp in the daytime, and a bell at night to arouse a sleeping person.

Danger signals often use both a red lamp and a bell. Railway crossing alarms are good examples of this.

Lamps of proper size and voltage rating can often be connected in parallel with a bell as in Figure 39-A, or in series as in Figure 39-B.

Figure 40 shows a circuit which enables the caller to use either the lamp or bell as desired.

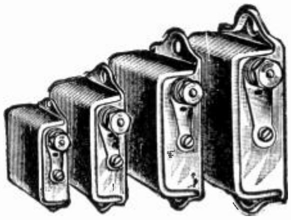

Fig. 37. Four office buzzers of different sizes. Each size gives a signal of a different tone and volume.

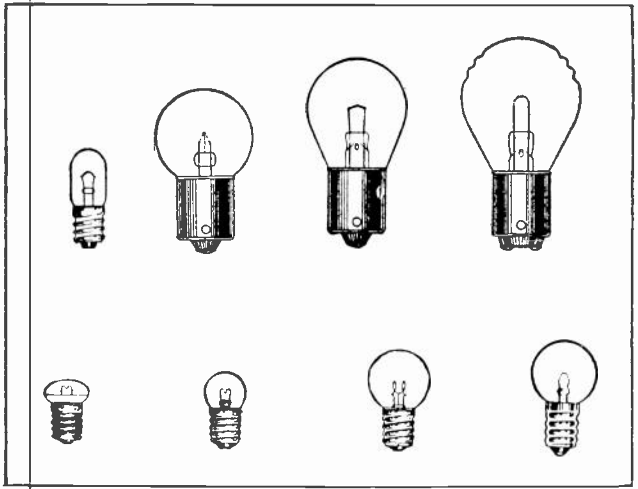

Fig. 38. Several types of low voltage lamps which can be used for signal circuits.

26. MAGNETIC DOOR OPENERS

A device quite commonly used in connection with door bells is a **Magnetic Door Opener,** shown in Figure 41. These devices will unlock the door by use of magnets, when a button inside is pressed. They are particularly popular and useful in apartment buildings where the door bell may call someone several floors above. Such buildings usually have speaking tubes or telephones in connection with the door bells, and after the bell is rung and the party in the house finds out who is calling, they can unlock the door if they wish to by merely pressing a button in their apartment. Thus they are a great convenience and time saver. Figure 42 shows a sketch of a magnetic door lock in connection with a door bell system. Note how the same battery and the center wire are used for both circuits. Many worth while economies can be effected in wiring signal systems, by such simple combinations of circuits. A number of these will be shown a little later in this section.

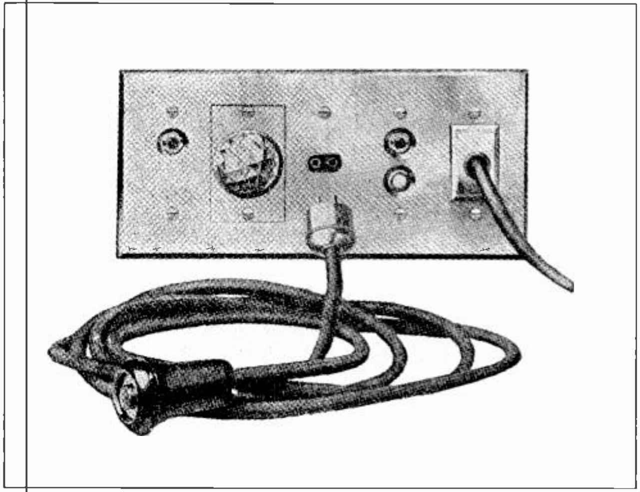

Fig. 38-A. Panel and cord for silent hospital signal. The lamp is located behind the glass "bulls-eye" at the left.

27. DROP RELAYS FOR CONSTANT RINGING SIGNALS

In certain alarm and signal systems it is often an advantage to have the bell continue to ring until it is shut off by the person it is to call. For example a burglar alarm in order to give a sure warning, should not stop ringing if the burglar stepped in through the window and then closed it quickly. To provide continuous ringing of a bell once the switch is closed, we use a device called a **drop relay.** Figure 43 shows one of these devices, and Figure 44 shows a sketch of the connections of a drop

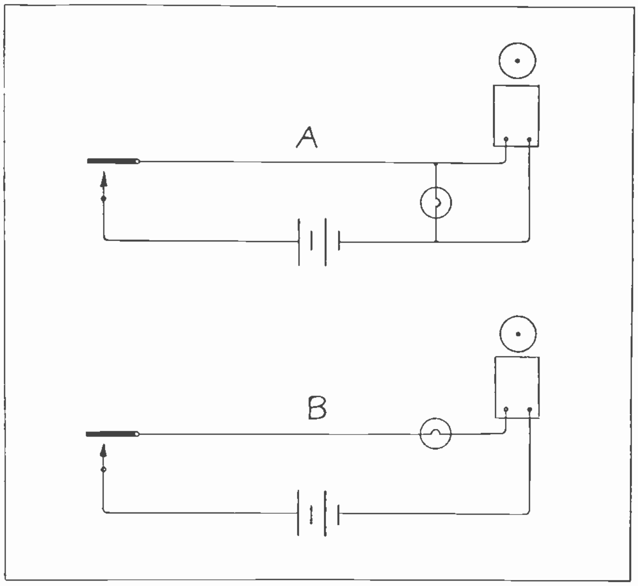

Fig. 39-A. Signal lamp connected in parallel with a bell so they both operate at once.

Fig. 39-B. Signal lamps can also be connected in series with bells if they are of the proper resistance.

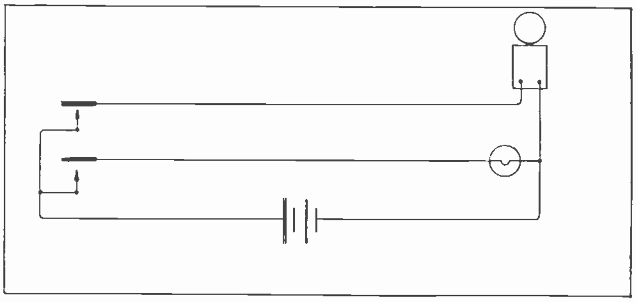

Fig. 40. Connections for operating either a bell call or silent lamp signal, as desired.

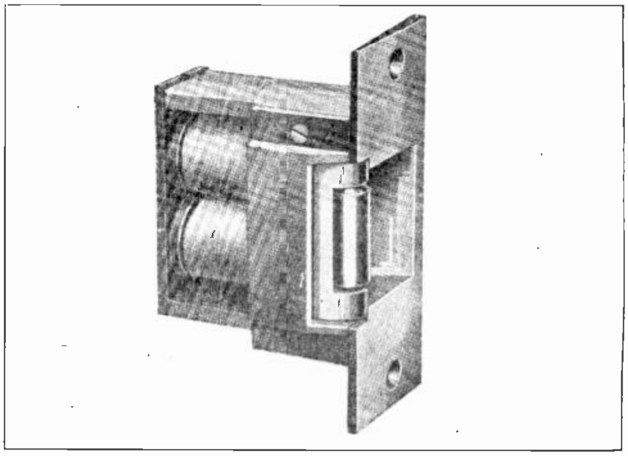

Fig. 41. Magnetic door opener, used to unlock doors in apartment houses or buildings from a distance, by the use of a push Button and low voltage circuit.

relay with a bell, battery, and switch, ready to operate. Trace each part of this circuit and examine the parts of the device carefully, and its operation will be easily understood.

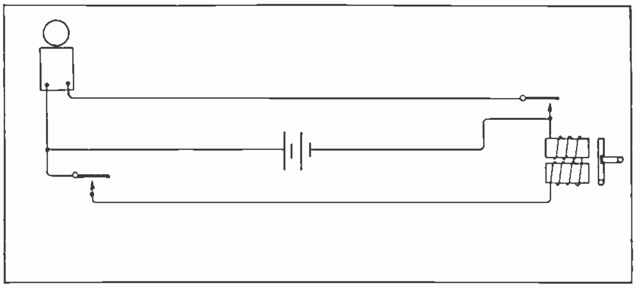

Fig. 42. Sketch showing connections for a door bell and magnetic door opener.

When the switch is closed, current first flows through the circuit as shown by the small arrows, causing the coils to become magnetized and attract the armature. This releases the contact spring which flies up and closes the circuit with the stationary contact to the bell. Before being tripped, the contact spring is held down by a hook on the armature, which projects through a slot in the spring. The button "B" extends through the cover of the relay, and is used to push the contact spring back in place, or reset it, and stop the bell ringing.

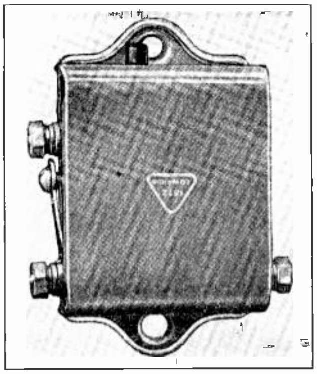

Fig. 43. Common type of drop-relay to provide constant ringing in alarm or signal circuits.

In tracing the bell operating circuit shown by the large black arrows, we find the current flows through the frame of the device from "C" to "D." The marks or little group of tapered lines at "C" and "D" are symbols for **Ground** connections. From this we see that a ground connection as used in electrical work does not always have to be to the earth. But instead a wire can be **Grounded** to the metal frame of any electrical device, allowing the current to flow through the frame, saving one or more pieces of wire and simplifying connections in many cases. It is a very common practice in low voltage systems, and extensively used in telephone and automobile wiring. So remember what that symbol means whenever you see it from now on. Another type of drop relay is shown in Figure 45, and its circuit and connections with a bell and battery are shown in Fig. 46.

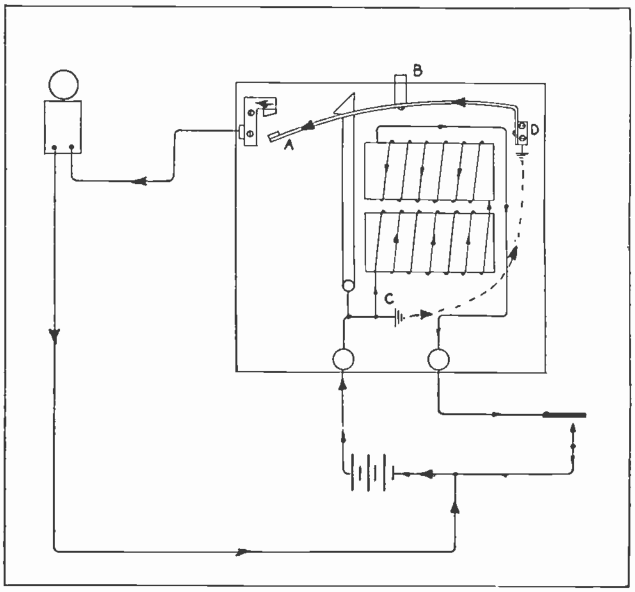

Fig. 44. Sketch showing complete circuit and connections of drop-relay of the type shown in Fig. 43. Examine this sketch and trace the circuit very carefully.

This relay is a little different in construction than the one in Figure 43, but it performs the same function of causing the bell to ring constantly when the relay is tripped. Trace this circuit carefully and compare the terminals "C," "D" and "E" with their position on the relay in Figure 45, and this will show you how to properly connect the device in a circuit.

Drop relays are used very extensively in burglar alarms, and also in other forms of signals. Some special bells are made with an extra release spring and switch to make them ring constantly until reset. This is a sort of drop relay built right into the bell.

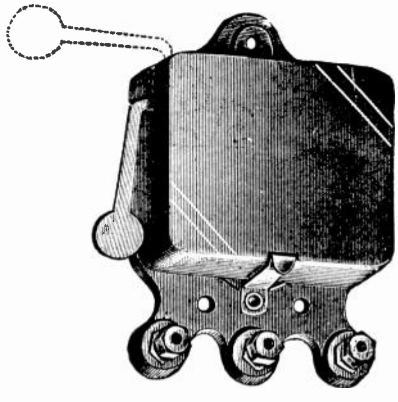

Fig. 45. Another type of drop-relay of slightly different construction, but also providing constant ringing.

28. RELAYS

Earlier in this section it was mentioned that a closed circuit system is much more reliable than an open circuit system, because any fault such as a broken wire or dead battery would make itself known at once by causing the signal to operate. So closed circuit systems are much better for burglar alarms, fire alarms, etc., where it is very important

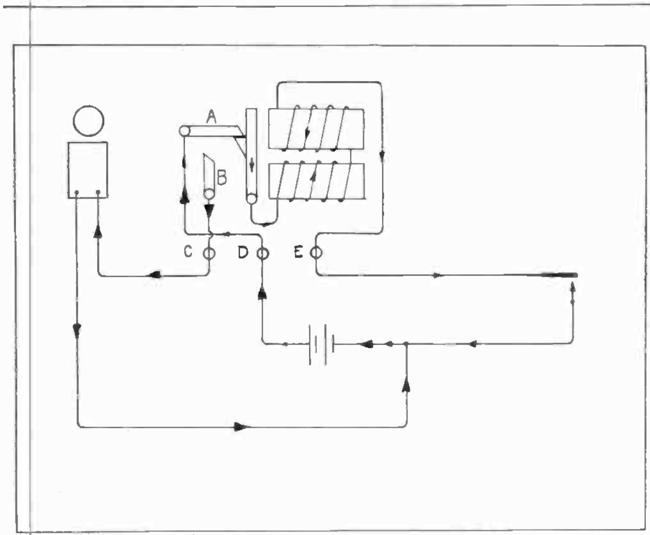

Fig. 46. This sketch shows the method of connecting a drop-relay such as shown in Fig. 45 to a bell battery and push button for constant ringing signals.

not to have a fault in the system go unnoticed until just when the signal is most needed.

We cannot, of course, connect a bell directly in a closed circuit, or it would ring continually. So we have an interesting device which can be connected in the closed circuit, using very little current, and making no noise until its circuit is disturbed. Then it immediately gets busy and closes a second circuit to the bell, causing it to ring.

This device is called a **Relay.** Its name gives a good idea of its function. When it receives an impulse or has its current interrupted, it passes on an impulse of current to a bell or other device, similar to the man in a relay race who passes his stick to the next man to carry on.

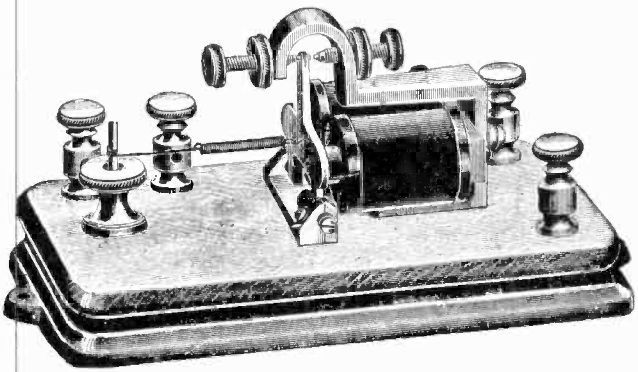

Fig. 47. Common Pony Relay such as used in burglar alarm and telegraph systems. Examine the construction and parts, and compare with description given.

A relay is in reality a **Magnetically Operated Switch.** Figure 47 shows a common type of Pony Relay, which is used extensively in alarm, signal, and telegraph work.

Examine this relay very closely. You will note the **Coils** or electro magnets, which are to attract the **Armature** or movable part of the switch. The armature is the vertical metal piece set in pivot hinges at the left end of the magnets. Then there is a coil spring attached to it and having its other end fastened to an adjusting screw to vary the spring tension on the armature. This spring is to pull the armature back each time the magnets release it. The large piece of brass with the curved arch above the armature is called the **Bridge,** and supports two adjustable bridge contacts. These screw contacts have hollow tips, in which we can place plugs of metal, hard rubber, or wood, according to which contact we wish to use in the circuit. Note that the armature tip also has small points of good contact metal on each side where it touches the bridge contacts.

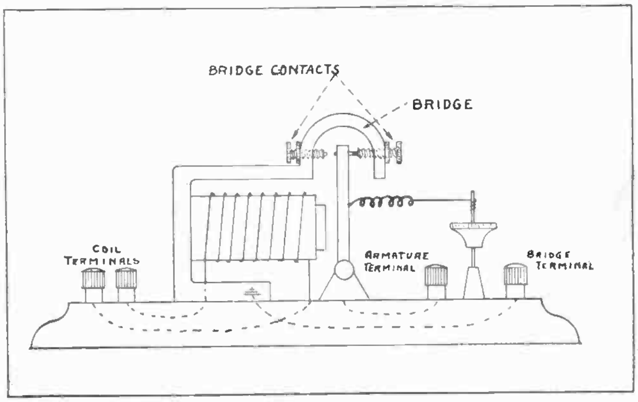

Fig. 48. Diagram showing the arrangement of the electrical circuits and terminals of a Pony Relay.

29. RELAY TERMINALS AND CONNECTIONS

The two connection posts or terminals on the right end of the base in Fig. 47 connect to the coils. And of the two on the upper left corner, the right-hand one nearest the armature is connected to the armature, and the left one connects to the bridge. These connections are made under the relay base. It is very important to remember which of these terminals are for the coils, armature, and bridge.

Figure 48 is a sketch of this relay showing its electrical parts and circuits from the opposite side to the one shown in Figure 47. Compare this very closely with the picture in Figure 47, and locate the coils, armature, bridge, contacts, and terminals, so you know the location of each and the operating principle of the relay. Figure 49 shows another relay of slightly different construction but same general principle as Figure 47.

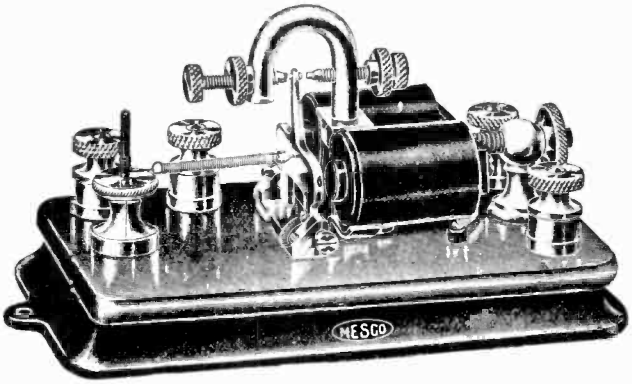

Fig. 49. Another type of Pony Relay similar to the one in Fig. 47, but of slightly different mechanical construction.

30. OPEN, CLOSED, AND DOUBLE CIRCUIT RELAYS

Relays can be used in several different ways in circuits, and according to their use they are called **Open Circuit, Closed Circuit, and Double Circuit Relays.**

To use a relay as an open circuit device, we place the metal tipped bridge contact screw on the left side of the bridge arch, and the insulated contact on the right, or the side away from the coils, as in Fig. 50-A.

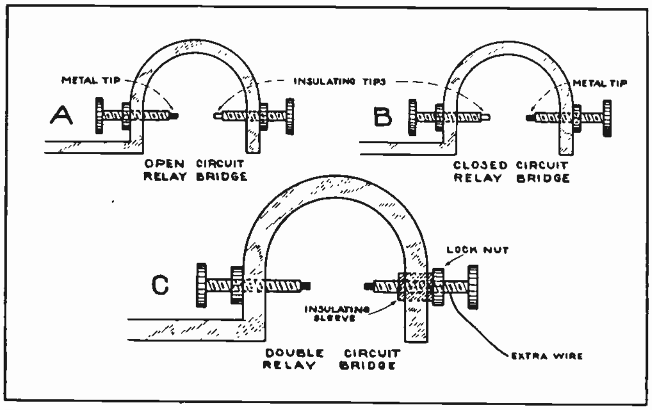

Fig. 50. This sketch shows in detail the manner of arranging and insulating relay bridges for open circuit, closed circuit, and double circuit operation.

For closed circuit operation we reverse them. For double circuit use we fit both bridge screws with metal tips, but remove one screw and insulate it from the bridge arch, by enlarging the hole and fitting it with an insulating sleeve, then replacing the screw in this sleeve. Then we attach an extra wire to this screw for the extra circuit. See Figs. 50-A, B, and C. With a drill to enlarge the hole in the bridge, and piece of fibre or hard rubber, or even hard wood, for the insulating sleeve, any ordinary pony relay can be easily changed to a double circuit relay in this manner in a few minutes. This is a very important thing to remember, because some time you may not be able to get a double circuit relay, and it may be very handy to know how to change over a single circuit relay in this manner.

31. RELAYS USED IN BURGLAR ALARMS

Figure 51 shows a closed circuit relay connected up for operating a simple closed circuit burglar alarm. Here we have used just the symbol for the relay instead of a complete sketch. Note what a time saver this symbol is, and practice making a sketch of it until you are sure you can make it any time, when laying out a plan for a system using relays.

Trace out the circuit in Figure 51 until you understand its operation thoroughly. Note that current will normally be flowing all the time in the closed circuit "A". For this reason most relays of this type have high resistance coils, wound with many turns of very fine wire, so they will not use much current from the battery. Many of these common relays have coils of 75 ohms, and they can be obtained with higher or lower resistance for various uses. Recalling the use of Ohms law formula, we find that if a 75 ohm relay is used in a circuit with a 3 volt battery, only .04 ampere will flow. Or as E÷R=I, then 3÷75=.04.

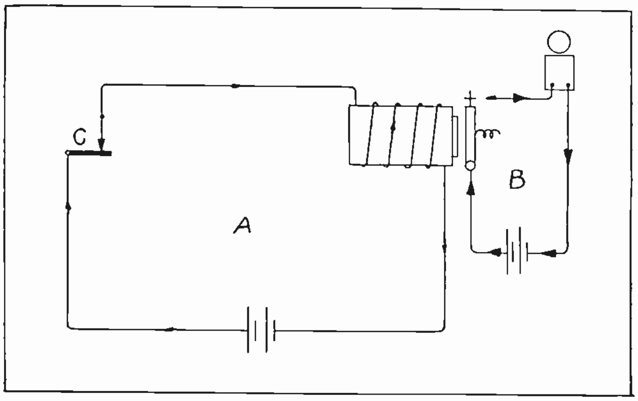

Fig. 51. Connections for a closed circuit relay used to operate a bell in a simple bulglar alarm system.

Many relays are made so sensitive and with such high resistance coils, that .001 ampere or less will operate them. But even with the small current flow of .04 ampere, it will be best to use a gravity cell, Edison cell, or storage battery, for the closed circuit "A", so the continuous current flow will not exhaust it quickly.

As long as this system is not disturbed, the current flowing in the closed circuit "A" and through the relay coils, will hold the armature away from the bridge contact, and the bell will remain silent.

But if a burglar disturbs the window or door to which the closed circuit switch "C" is attached, this will open the circuit and stop the current through the relay coils, and they will release the armature. Its spring will pull it against the bridge contact and close the circuit to the bell giving the alarm.

32. PROPER LOCATIONS OF PARTS FOR DEPENDABLE CLOSED CIRCUIT SYSTEMS

In installing such a system, the relay, bell, and batteries would usually all be grouped close together, possibly all on one shelf, so the wires between them and in circuit "B," would be short and have little chance of being damaged. The wires of circuit "A" would be the long ones running through the building to the part to be protected.

If these wires should be cut or damaged, or this battery go dead, the relay would immediately cause the bell to operate, calling attention to the fault. While with an open circuit system the wire could be cut, or the battery dead, and the system out of order, without any one knowing it, and thus fail to operate when needed the most.

The battery in circuit "B" is not likely to go dead so often, as there is very seldom any current required from it. But it should be tested occasionally to make sure it is in good condition. Any important alarm system should be tested daily, or every evening, before being switched on for the night.

In Figure 51, in the relay symbol, we only show the one bridge contact which is in use.

When we desire to operate a bell or signal sounder at a considerable distance, an open circuit relay can be used to good advantage to save sending the heavier current required by the bell over the long line.

If we were to send the heavy current over the long line, it would cause considerable voltage drop and we would have to use larger, more expensive wires, or higher voltage supply. But the relay current being very small can be sent over the line more economically, and the relay will act as a switch at the far end of the line, to close a **Local** circuit to the bell. See Figure 52.

This circuit uses an open circuit relay, and the bridge contact on the side opposite to the one used in Figure 51. This method of using a relay to operate on a feeble impulse of current, and close a circuit to a larger device requiring more current, is one of their most common applications.

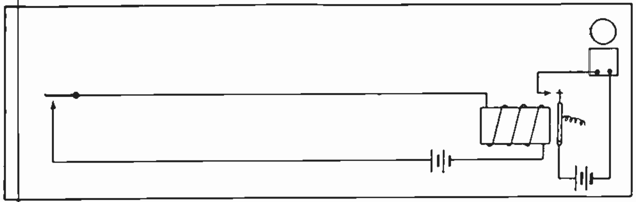

Fig. 52. Connection diagram for an open circuit relay used to operate a bell at a considerable distance from the push button.

33. USE OF RELAYS IN TELEGRAPH SYSTEMS. GROUND CIRCUITS

Figure 53 shows two relays at opposite ends of a line, and operating **Sounders** in local circuits, in a simple telegraph system. The primary circuit includes two line batteries, two key switches, and two high resistance relay coils. The secondary circuits each consist of a local battery and sounder, and include the relay armature and bridge contacts as their switches. You will note that only one line wire is used in the primary circuit, and the earth is used for the other side of the circuit, by grounding the batteries at each end as shown. This saves considerable expense in line wire, and is quite commonly done in telegraph, telephone, and certain classes of signal work.

If the ground connections are well made of buried metal plates, or rods driven deep into moist soil, the resistance of the earth is low enough so the losses are not very high with such small currents. Such ground circuits are not used to transmit electric power in large amounts, however.

Both of the telegraph keys in this system have extra switches that are normally kept closed when the keys are idle. This allows a very small amount of current to flow through the line and relay coils continually, when the system is not in use.

This keeps the relays energized, and the local sounder circuits closed also, through the relay armatures and bridges. This may seem like a waste of current, but the batteries, being of the closed circuit type, stand this current drain very well and do not cost much to renew when exhausted.

When an operator wishes to send a message, he opens the auxiliary switch on his key, thus opening all circuits. Then each tap of his key sends a feeble impulse or very small current over the line, causing the relays to operate and give similar impulses, but of much heavier current, to the sounders from their own local batteries.

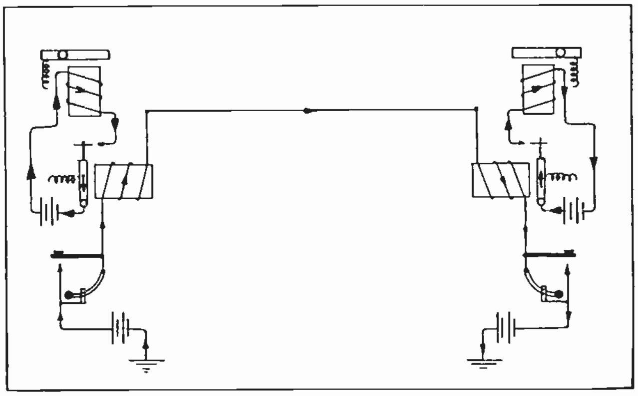

Fig. 53. Sketch of simple telegraph system showing line and ground circuit for the relays and keys, and local battery circuits for the sounders.

The operator at the other end of course hears the signals from his sounder. When the sending operator finishes, he closes his key switch, and waits for an answer. Then the other operator opens his switch and uses his key to signal back. Sometimes a number of such relays at various stations are all connected to one line, so they all operate at once, when any key is used.

Figure 54 shows a double circuit relay. In this system, as long as the switch "A" is closed the relay armature is attracted and closes a circuit through the lamp, showing that the circuit is in normal condition. But when switch "A" is opened the relay armature is released, allowing the lamp to go out and causing the bell to ring.

These double circuit relays have many uses, some of which will be shown a little later.

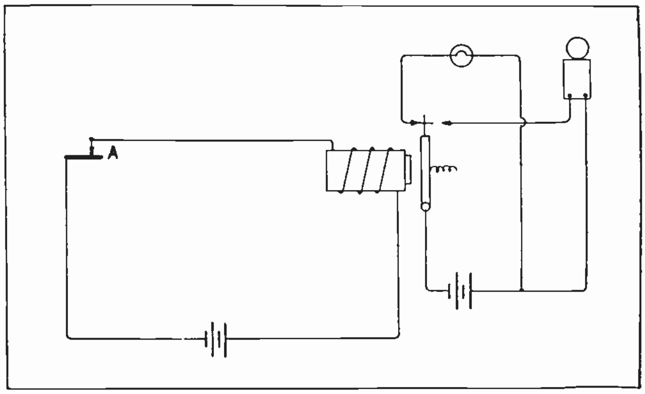

Fig. 54. Diagram and connections for a double circuit relay to operate a lamp when the system is undisturbed, and to ring a bell when the closed circuit is molested in any way.

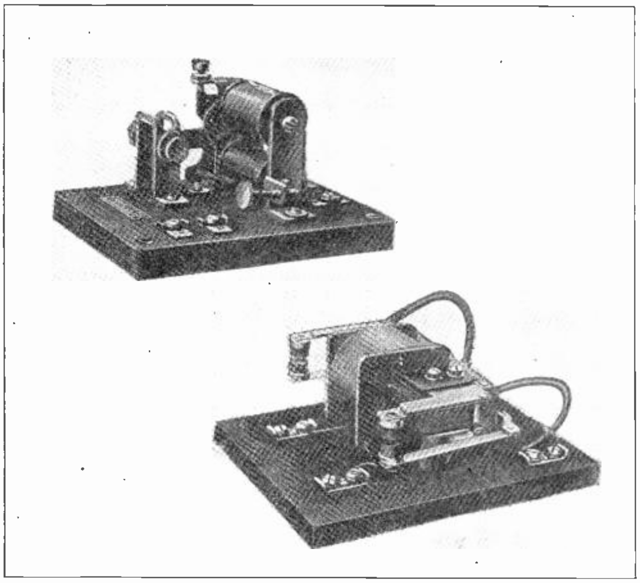

Fig. 54-B. Two additional types of relays used in various classes of signal circuits.

34. RELAY TERMINAL TESTS

If you are ever in doubt as to the correct terminals on a relay, a quick test with a dry cell and two test wires will soon locate the coil terminals. When the cell is connected to the coil wires the armature will snap over toward the magnets. Connecting a cell and buzzer or small low voltage test lamp, to the armature and bridge terminals, and then moving the armature back and forth by hand, will soon show which terminal connects to the closed bridge contact and which to the open one.

35. ADJUSTMENT AND CARE OF RELAYS

Relays require careful adjustment to secure good operation. The pivot screws supporting the armature and acting as its hinges, should be tight enough to prevent excessive side play of the armature, but not too tight or they will interfere with its free movement. By turning one of these screws in, and the other one out, the contact points on the armature can be properly lined up with the bridge contacts. The bridge contacts should be adjusted to act also as stops for the armature. The contact on the magnet side should be adjusted to allow the armature to come very close to the core ends, to reduce the air gap and strengthen the pull as much as possible. It should not, however, allow the armature to touch either core end, or it is likely to stick, due to slight residual magnetism, even after the coil current is turned off. Some relays have thin brass or copper caps over the iron core ends of the magnets, to prevent any possibility of this sticking. The contact on the side away from the magnets should be adjusted to allow the armature just enough swing to effectively break the circuit at the other contact; but not too far, or it will be very hard for the magnets to pull it back, due to the increased air gap between the armature and cores. This would require more current to operate the relay. Usually the gap or travel of the armature contacts should be from 1/32 in. for breaking circuits at very low voltage and small currents, to $\frac{1}{16}$ in. or ⅛ in. for slightly higher voltages and heavier currents; as these have a tendency to arc more, when the circuit is opened and the points must separate farther to extinguish the arc quickly.

The armature spring should be adjusted just tight enough to pull the armature away from the magnets quickly when it is released, but not too tight, or the magnet will not be able to pull up the armature.

The contacts on both the armature and bridge should be kept clean and occasionally polished with a thin file or fine sandpaper, as the slight arcing often burns and blackens them, greatly increasing their resistance.

When contacts become too badly burned or damaged to repair, they can easily be replaced with new ones, obtained from the relay manufacturers.

Dust and dirt should be kept off from all parts, and all terminal nuts should be kept tight. Cores of magnets should be kept tight on keeper bar support.

Occasionally, but not often, a relay coil may become open, grounded, or shorted, or completely burned out. Simple tests as given in the elementary section on electro-magnets will locate any such faults. (See Article 101.) In addition to these pony relays, there are numerous other types used in telephones, railway signals, power plants, etc. Some of these differ in mechanical construction and shape, from the ones just described, but their general purpose and principle are very much the same. So if you have a good understanding of the relays in this section and always remember that **any relay is simply a magnetically operated switch,** you should be able to easily understand most any type. Some of the others will be explained in later sections.

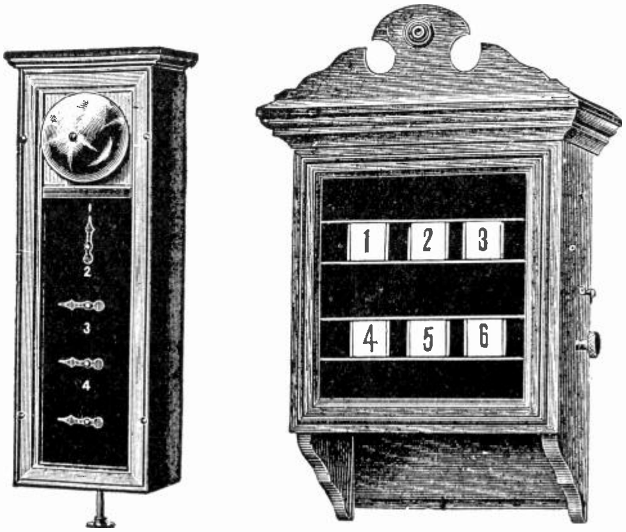

Fig. 55. Annunciators of these types are used to indicate where various calls on signal circuits come from.

36. ANNUNCIATORS

In alarm or signal systems where calls may come from several different points, it is often necessary to have some device to indicate which place the signal comes from. For this purpose we use an **Annunciator.** These devices indicate which circuit is operated, by arrows or numbers which are dropped into view by electro-magnets. Figure 55 shows two types of annunciators, and Figure 56 shows the electrical circuit of a 4 point annunciator.

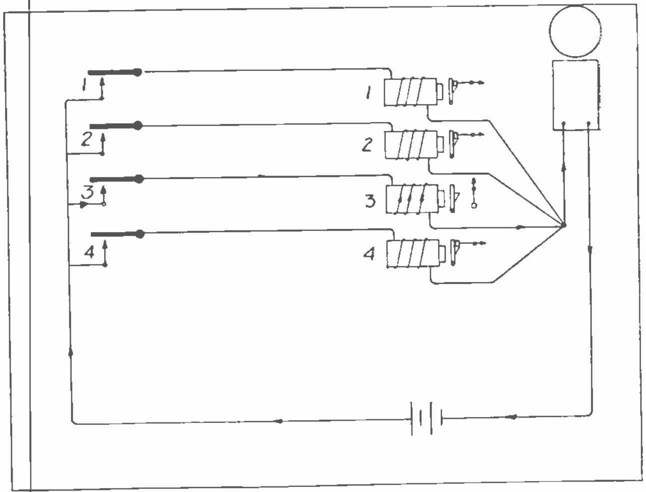

Fig. 56. Circuit diagram of the connections for a four-drop annunciator. Note that the drop number 3 has been operated.

Here we have four switches that may be used, for example, for office calls, burglar alarms, or hotel room calls. When any one of the switches is pressed it will send current through the respective annunciator magnet, and on through the bell. When a magnet is energized its armature is attracted, allowing the weighted end of the arrow to fall off the catch, and the arrow to fly up, as on magnet 3.

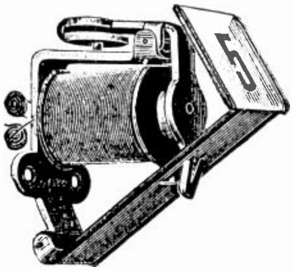

Fig. 57. This view shows the mechanical construction of one type of annunciator drop. Note how the drop is held up by a small hook on the end of the armature.

In Figure 57 are shown one of the magnets and "number drops" of an annunciator. When this magnet is energized, its armature is attracted and releases its catch from the slot in the drop arm. Gravity then causes the drop number to fall. Annunciators usually have a system of rods and hooks, all attached to one lever, to push the drops back in place after any of them are tripped. Some are equipped with a strong electro-magnet to operate this "reset" lever, from a switch on the annunciator case, or a short distance away.

Figure 58 shows a back view of an annunciator, and the magnets and reset mechanism.

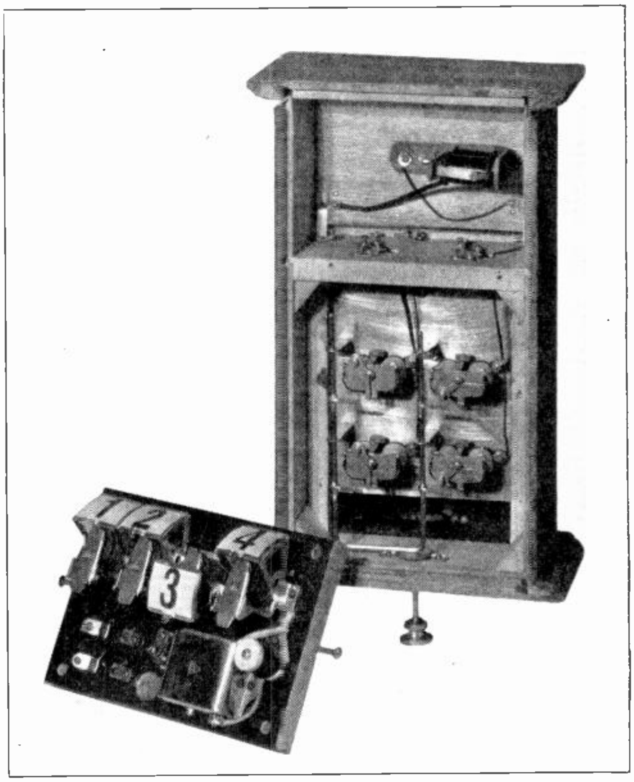

Fig. 58. Photographs showing the inside parts and construction of two common types of annunciators.

Referring to Figure 56 again, note how one wire from each magnet attaches to a common terminal or wire leading to the bell. This is called a **Common Return Wire,** as it makes a common path for current from any magnet to return to the battery. This is the wire that should go to the bell, so all coil circuits will operate the bell when they are tripped. Some annunciators have the bell built in them, and others do not.

37. ANNUNCIATOR CONNECTIONS AND TERMINAL TESTS

When installing annunciators it is very important to get the proper wires connected to the separate circuits, and to the bell. Sometimes they are marked with numbers on the box where they enter, but when they are not marked, they can be found by a simple test. Using a dry cell or source of supply, and two test wires, as in Figure 59-A, place one wire on one of the annunciator terminals at the end of the row or group, and hold it there while touching the other wire to the remaining terminals in rotation. If this causes the drops to operate in proper rotation then mark the wire to which your stationary test lead was connected, as the common lead, and the rest according to the numbers of the drops they each operate.

If touching the free test lead to certain ones of the terminals causes two or more drops to trip at once, the stationary lead is not on the common wire, and should be tried on the terminal at the opposite end of the row, because the common lead is usually at one end or the other. Sometimes, however, it may be somewhere else in the group.

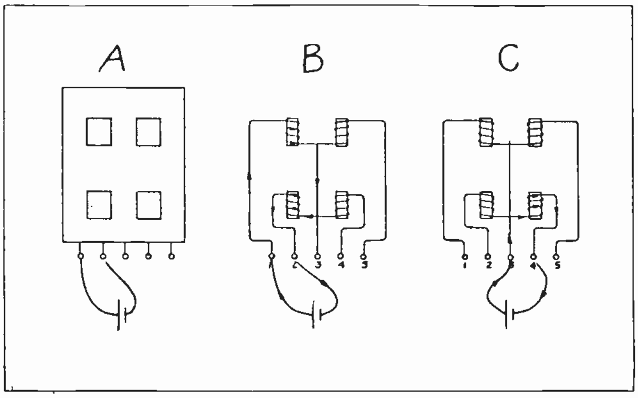

Fig. 59. Observe these test diagrams very carefully with the instructions given for locating annunciator terminals.

By touching the test wires to adjacent terminals two at a time, when two are found that cause only one drop to operate, one of these leads should be the common return. In Figure 59-B, with the stationary test lead on wire No. 1, touching the other test lead to wires No. 2, 4, and 5, should cause two drops to fall each time, if they are reset before each test. But when No. 3 is touched only one drop should fall, as No. 3 is the common terminal. Then when the stationary lead is placed on wire No. 3, and the free lead touched to the others, each one should cause one drop to operate.

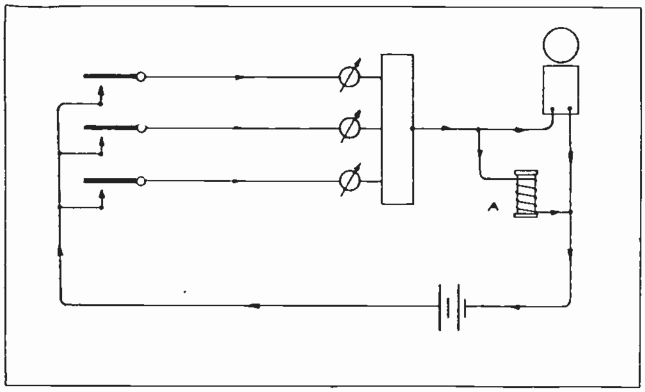

Fig. 60. Diagram showing connections of a three-drop annunciator in an opened circuit signal system. This annunciator uses a ballast coil shown at "A," and connected in parallel with the bell to allow the proper amount of current to flow to operate the drops.

With annunciators that are equipped with a bell or buzzer permanently connected, it is easier to locate the common wire, as it is the only one that will cause the bell to operate when the test battery is applied. For example, when the test wires touch two terminals and cause the bell to ring, one of these terminals must be the common return lead. Trying each one with another wire will quickly show which one operates the bell.

Some annunciators have a ballast coil connected in parallel with the bell, as at "A" in Figure 60. This coil carries part of the current when the bell is of high resistance and not able to carry quite all the current required to operate the drop magnets. Figure 60 also shows a different symbol which is often used for the annunciator in plans or diagrams.

Some large annunciators have a separate reset magnet for each drop magnet, as in Figure 61-A and B. In Figure "A" the reset coil has been operated, and has drawn the armature toward it, carrying the number on the disk out of view from the annunciator window. In Figure 61-B the trip coil has operated, drawing the armature toward it and bringing the number on the disk into view, in vertical position in the annunciator window. (Window and case not shown in this sketch.)

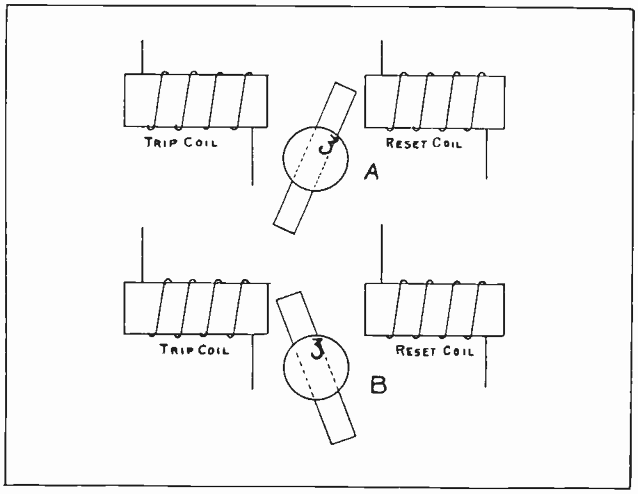

Fig. 61. Sketch illustrating arrangement of coils and number disks on an "electrical reset" annunciator.

Figure 62 shows both sets of coils for a four point annunciator and their connections. Each trip coil can of course be operated separately, but when the reset button is pressed all reset coils operate at once, resetting all numbers that have been tripped.

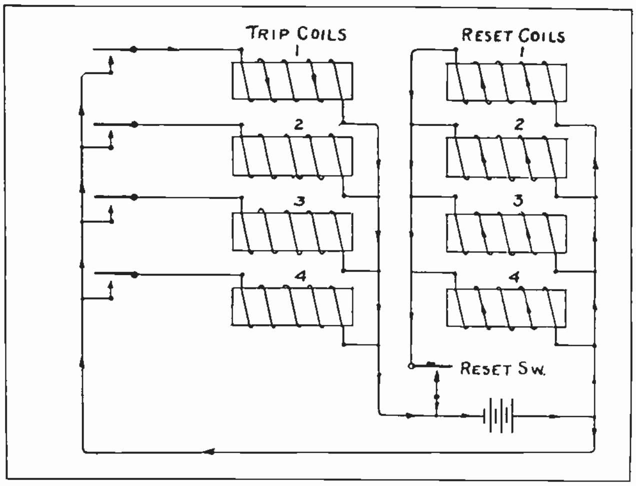

Fig. 62. Complete diagram of a four-drop annunciator using "electrical reset" magnets.

Hotels, hospitals, and steamships often have annunciators with several hundred numbers each. Elevators also use thousands of these devices.

38. LOCATING FAULTS IN ANNUNCIATORS

When annunciators fail to operate, careful checking and tightening of all terminals will usually locate the trouble. If none of the drops operate, and the supply battery to the system is tested and found O.K., and all circuits good up to the annunciator, then the trouble is almost sure to be in the common return wire, bell, or ballast coil, if one is used. If only one drop fails, then its own wire, coil, or mechanism is at fault, and careful checking and testing with a dry cell and buzzer should locate it. Here again the rules for testing electro-magnets, given in Section 1, Article 101, should be useful.

COYNE
Electrical School
CHICAGO ~~ ILLINOIS
ESTABLISHED 1899

ELECTRIC SIGNAL SYSTEMS

PLAN READING
AND
INSTALLATION

Section Two

PLAN READING
AND
VARIOUS TYPES OF SIGNAL CIRCUITS

Now that you understand some of the more common devices used in signal circuits, you will want to learn how they are arranged and connected in the larger and more complete systems.

But first, in order to be able to more easily understand and trace out these advanced circuits, we will cover some of the more definite methods of plan reading and circuit tracing.

Remember this is one of the most valuable things any electrical man can know, and nothing will give you any more confidence, or be of greater help to your success on the job, than a good knowledge of plan reading and circuit tracing. Once you have learned the real system or "trick" of this, it is really very enjoyable and satisfying to trace out almost every circuit or blue print you come across, and you will be surprised how much better understanding you can get of any device or system in this way.

39. SYMBOLS USED IN SIGNAL DIAGRAMS.

The chart in Fig. 62-A gives a review of all the most common symbols used in the following diagrams and signal systems, and you should study these carefully, so you will be able to recognize them quickly when tracing any circuit. You will also want to be able to quickly select and use the proper symbol for any device, when laying out a plan for a job yourself.

40. METHOD OF TRACING CIRCUITS, OR READING PRINTS.

In each of the following systems shown, make a practice of first examining the plan in general, locating and recognizing all of the devices by their symbols. Then get a general idea of the layout, number and arrangement of separate circuits which may be combined in the one system. Next start with the primary or first operating circuit, and trace it out carefully until you can imagine every step of its operation clearly, then the next circuit, or the one which is operated by the first, tracing its operation and so on until you are sure you thoroughly understand the entire system.

At first this may seem like quite a job, but after a little persistent practice you get the trick or method of it, and then you can read most any plan almost at a glance. The ability to do this will be worth more in the field than any beginner can realize, until he finds out what a great help it is on the job, in any kind of electrical construction work or "trouble shooting" and maintenance.

Don't forget that every principle and bit of practice you get in tracing signal circuits will apply to practically any other kind of work as well.

Also remember that most electrical wiring nowadays is done from plans, and not by guesswork. And when we have a difficult trouble shooting problem in a large machine or system, looking over the plan furnished, or making a sketch of the wiring, will often speed up the location of the trouble more than anything else. The man who can do this and save the most time is the man who gets the best jobs.

Then too, as you carefully trace out and study each of the following systems you will also be gaining a knowledge of the principles and operation of common signal, alarm, and call systems.

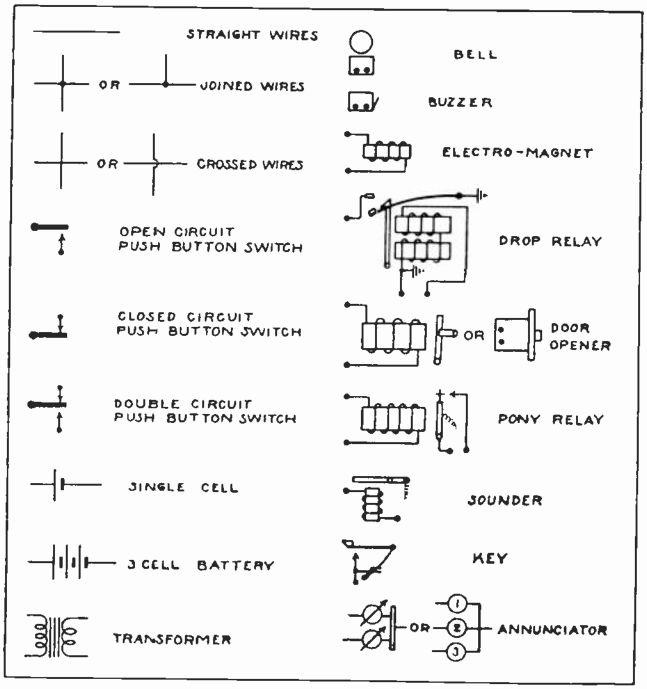

Fig. 62-A. These are some of the most important symbols used in signal diagrams and circuits. They should be memorized so you can easily recognize them when tracing any diagram in the future.

41. OPEN CIRCUIT SYSTEMS.

Fig. 63 shows an open circuit call or signal system, in which any one of three switches will operate the bell. Note that the switches are all connected in parallel. **Open Circuit Switches must always be connected in parallel, if each one is to be able to close the circuit.**

If they were connected in series then they would all have to be closed at once, in order to close the circuit. Make a sketch of this same circuit, but with the switches in series, and prove this out for yourself, because it is very important, and making a sketch will help you remember it.

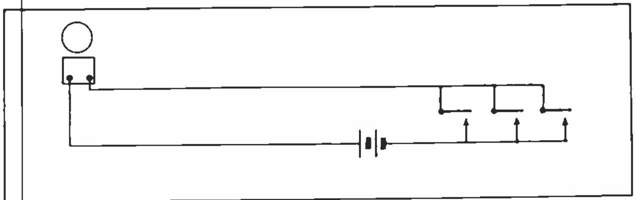

Fig. 63. Simple signal system using three buttons in parallel, any one of which will ring the bell.

Fig. 63 shows only three buttons in use, but any number can be connected in this manner to operate the same device. Such a circuit can be used for the signals on street cars or busses, for an office call where several different parties are to be able to call one person, or for a simple burglar alarm system, by connecting the window and door contacts of open circuit type, to the bell and battery as shown.

42. SELECTIVE CALL CIRCUIT.

Fig. 64 shows a selective call system, in which switch number 1 rings bells 1 and 2, and switches 2 and 3 both operate bell number 3.

Bells 1 and 2 are connected in parallel and both controlled by button 1. Buttons 2 and 3 are connected in parallel, and either one will operate bell number 3.

The lower wire leading from the positive terminal of the battery to the stationary contacts of the switches, can be called a **Common Feeder Wire,** as it carries current to any of the buttons as they are closed.

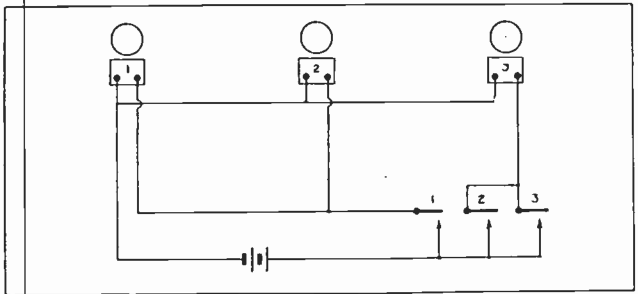

Fig. 64. Selective call system. Button No. 1 will ring bells 1 and 2; buttons Nos. 2 and 3 will ring bell No. 3.

Trace this circuit carefully. When switch number 1 is closed, current will flow from the battery through the switch, and then divide, part of it flowing through each bell. A good rule to remember in tracing such circuits is as follows: **Electric current will flow through all paths provided from positive to negative of the source of pressure. It also tends to follow the easiest path, or the greater amounts of current will flow over the lower resistance paths.**

In the case of Fig. 64, both bells being of equal resistance, and the circuits to them about the same length, the current will divide about equally.

The wire which leads from the left terminal of all three bells, back to the negative battery terminal, can be called a **common return wire,** as it serves to carry the current back to the battery, from any or all of the bells.

43. RETURN CALL SYSTEMS.

Fig. 65 shows a return call system using two bells and two single contact buttons. This is called a return call system because either party can signal the other, or can answer a call by a return signal if desired.

Button number 1 rings bell number 2, and button number 2 rings bell number 1. When button number 1 is closed current flows as shown by the small arrows, and the large arrows show the path of current when button number 2 is pressed.

Note that three main wires or long wires are used in this system.

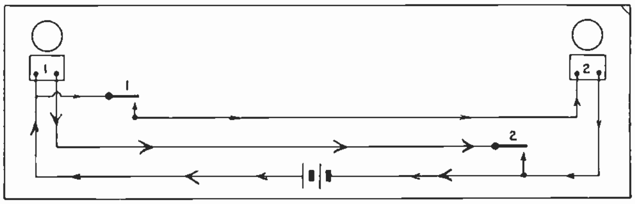

Fig. 65. Return call system. Button No. 1 will ring bell No. 2; button No. 2 rings bell No. 1.

In Fig. 66 is shown another method of connecting a return call system, which causes both bells to ring when either button is pressed.

This system uses two batteries, one at each end, but it saves one main wire, using only two instead of three, as in Fig. 65.

When button number 1 is pressed current flows from battery number 1 as shown by the small arrows, dividing through both bells. When button number 2 is pressed, the current flows from battery number 2 as shown by the large arrows, also operating both bells.

In this system, if the line is very long the bell nearest the button pressed, may ring a little the

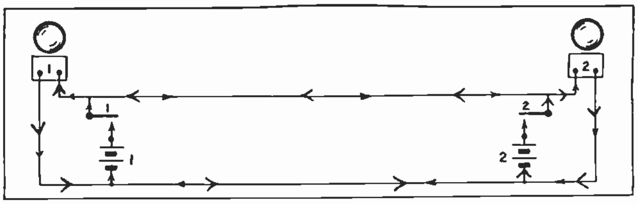

Fig. 66. Return call system using two batteries, thereby saving one wire.

loudest, because its circuit is shorter and lower resistance. Trace this carefully in the sketch.

If the far bell does not ring loud enough, then higher voltage batteries, or larger wires should be used.

Fig. 67 shows a return call system, using double circuit switches.

Here also, button number 1 rings bell number 2, and button number 2 rings bell number 1.

When button number 1 is pressed the current flow is shown by the small arrows, and the large arrows show the path of current when number 2 is pressed. If both buttons should be pressed at once neither bell would ring. Check this on the diagram.

This system also uses three main wires.

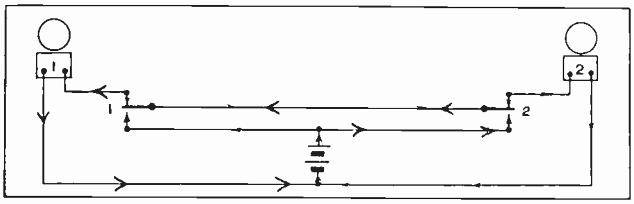

Fig. 67. Return call system using double circuit switches. Trace this circuit carefully.

44. SAVING WIRES BY USE OF DOUBLE CIRCUIT SWITCHES OR "GROUNDS".

Fig. 68 shows how double circuit switches can be used to save considerable wire in connecting a return call system.

By using two separate batteries and the double circuit switches, one main wire can be eliminated and the system operated with only two as shown.

When button number 1 is pressed, current (shown by small arrows) flows from battery number 1, and operates bell number 2. When button number 2 is pressed, current (shown by large arrows) flows from battery number 2, and operates bell number 1.

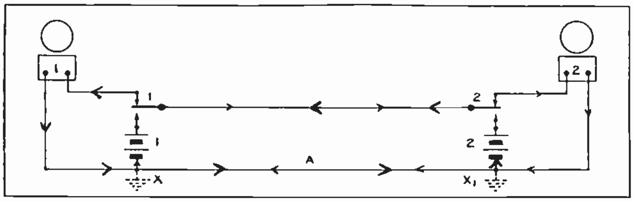

Fig. 68. Return call system showing how wires can be saved by the use of double circuit switches, two separate batteries, and a ground circuit.

When such a return call system is to be installed where the bells are a long distance apart and it is convenient to make good ground connections at each end, we can eliminate still another wire, by the use of ground connections as shown by dotted lines at "X" and "X^1," in Fig. 68. Then we do not need wire "A", current flowing through the ground instead. Sometimes a piping system can be used for these grounds, and no connection to earth is needed.

Trace this circuit over very carefully, and be sure you understand its operation, as it is often very important to be able to save these extra wires, where the line between bells is long.

45. CALL SYSTEM WITHOUT SWITCHES.

Fig. 69 shows a system of signaling that is often very convenient for use on temporary construction jobs, where workmen need to signal each other; or in mines or mine shafts.

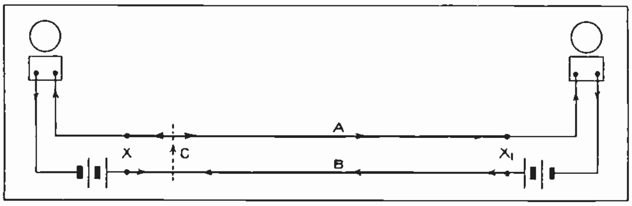

Fig. 69. Mine signal or alarm circuit which uses no switches. The bells are caused to ring by short circuiting wires "A" and "B".

No switches are used in this system, and instead wires "A" and "B" are bare or uninsulated, so any metal object can be used to "short" them or connect them together as shown by the dotted line at "C." Then if the wires "A" and "B" are strung tight and parallel to each other, a few inches apart and supported on insulators, a shovel, pick or piece of wire or metal touching both wires anywhere between points "X" and "X^1", will cause both bells to ring.

You may wonder at first why current does not flow all the time in this circuit, as it is always closed. Note how the batteries are connected positive to positive, or opposing each other, so if they are of equal voltage no current can flow normally. Of course if one battery was dead the other would cause both bells to ring continuously.

When a circuit is made between the two wires as at "C" the current starts to flow from both batteries as shown by the arrows, up through the connection "C" and then dividing through both bells, and returning to both battery negatives.

Such a system as this can also be operated from moving cars or elevators, by running the bare wires along close to the track or in the shaft.

46. SELECTIVE AND MASTER CALLS.

Fig. 70 shows a selective call system, with a master control, using one battery, three bells, and three single circuit switches.

Button number 1 operates bell number 1. Button number 2 operates bells number 2 and 3 in series. And button number 3, which is called the master button, operates all three bells in series. Trace each circuit carefully.

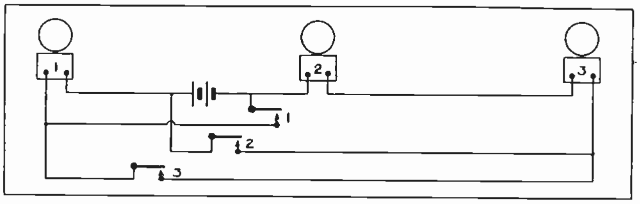

Fig. 70. Selective signal circuit. Check its operation carefully with the instructions.

Another method of arranging a selective call system with a **Master Switch,** is shown in Fig. 71. In this system any one of the double circuit switches 1, 2, 3 or 4, will operate its respective bell of the same number only, but the single circuit switch number 5, will operate all bells when all the other switches are in normal position.

When any one of the double switches is pressed, its movable contact is disconnected from the upper, or normally closed contact, so when the movable contact touches the lower one, current can only flow through them to its own bell, and not to any of the others.

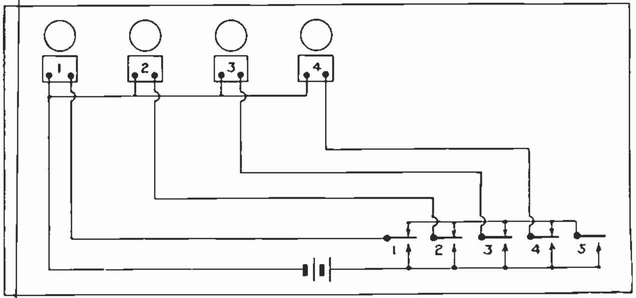

Fig. 71. Selective call system with Master Switch. This is a type of system very often used in executives' offices.

When button number 5 is pressed current flows from the positive of the battery through this button, then divides through the closed contacts of all the other switches and to all bells. Trace this on the sketch until you can clearly imagine this operation.

Note how the wire from the positive of the battery is again used as a **Common Feeder** for all switches, and also the common return wire used for all bells. Of course one separate wire is required feeding from each switch to its bell, if we are to operate them separately at times, but a great amount of wire can be saved by proper use of **Common Feeder** and **Common Return** wires.

This is where a sketch or plan laid out in advance helps to save materials.

47. CONNECTING VIBRATING BELLS FOR SERIES OPERATION.

When several bells are to be operated in series as in Fig. 70, or other systems for which they are connected this way, they will usually not operate very loudly or steadily without a special connection. This is because they do not all vibrate evenly or in synchronism, and the make and break contacts of one bell will open the circuit just as another goes to close for its power impulse. This results in rather irregular and weak operation, and the greater the number of bells in series, the worse it usually is.

This can be overcome by arranging one bell only as a vibrator, and all the rest as single stroke bells. This is done by shunting out the make and break contacts of all bells except the one, as in Fig. 72. Here the current will flow through the make and break contacts of bell number 1 only, and on the others it flows directly through the coils. Number 1 bell then acts as a **Master Vibrator,** making and breaking the circuit for all the others, robbing them of the power to interrupt the circuit, and forcing them to operate in synchronism.

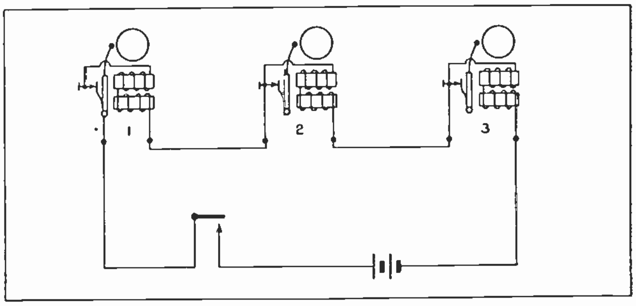

Fig. 72. This sketch shows the proper method of connecting vibrating bells in series, to secure best results.

A series connection of bells is often desirable where they are all to be rung at once and are located a long distance apart, as it saves considerable wire in many cases.

48. ECONOMICAL BARN OR GARAGE ALARM.

Fig. 73 shows a method of connecting a bell as a combination single stroke and vibrator, and obtaining a closed circuit call or alarm system.

When we recall that a closed circuit system usually requires a relay to operate the bell, we find that this trick or connection effects quite an economy by saving the cost of a relay.

Tracing the circuits we find that as long as the switches are all closed, the current will flow continuously as shown by the small arrows, through the bell coils, then through the switches and back to the battery. This keeps the coils energized and holds the hammer quietly against the gong, after the first single stroke when it is connected.

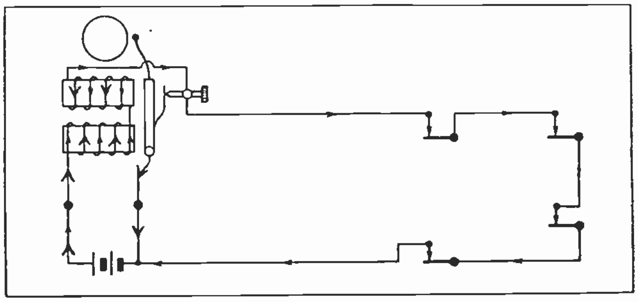

Fig. 73. Simple and economical barn or garage alarm of closed circuit type.

Then when any one of the switches is opened, the circuit is momentarily broken, allowing the hammer to fall back and close the circuit again at the make and break contacts of the bell.

The bell will then continue to vibrate, current flowing as shown by the large arrows, until the switch in the line is again closed. This is a very good circuit to keep in mind when the dependability of a closed circuit system is desired, but must be had at low cost.

A bell with high resistance coils should be used, to keep the amount of current flow small. A closed circuit battery should also be used, as dry cells would soon be exhausted by the constant current flow.

This system makes a very good barn or garage alarm, where long wires are to be run in the open, between the protected buildings and the house. Then if anyone attempts to cut these wires, the alarm will operate just as though the window or door switches of the building were disturbed and opened.

49. OFFICE OR SHOP CALL SYSTEM.

Fig. 74 shows a selective master control call system that would be very convenient for an office executive or shop or power plant superintendent, to signal their various foremen or workmen. Any one at a time can be called, by pressing the proper double circuit switch, or all can be called at once by pressing the single circuit master switch.

The small arrows show the path of current flow when one of the double switches is operated, and the large ones show the current flow to all bells when the master switch is operated.

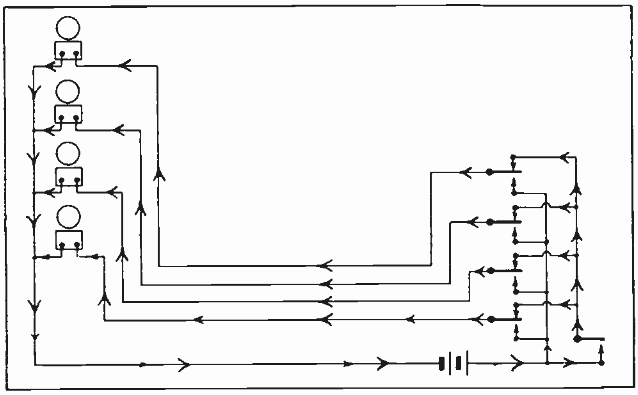

Fig. 74. Another type of selective call system with Master Control.

At first glance this circuit does not look much like the one in Fig. 71, does it? But look at it again and compare the two closely, and you will find they are exactly the same as far as parts and operation are concerned. The only difference is in the position or arrangement of these parts.

This comparison is made to show you that it does not matter how or where the bells or switches are to be located, as long as certain general principles of connection are followed.

Note that in each of these sketches a common feeder runs from the positive of the battery to all the lower or open contacts of the switches. Another common wire leads from the top of the master switch to the top or closed contacts of all double circuit switches. Then the individual bell wires are each attached to the movable contacts of the double switches in each case, and a common return from the bells back to the battery.

These are the principle points to note and follow in connecting up any such selective, master, call system.

50. APARTMENT DOOR BELL AND OPENER SYSTEMS.

Fig. 75 shows a door bell and magnetic door opener system for a three apartment building.

This sketch is arranged a little differently to show how the wires running up to the various floors can all be grouped together and run in one conduit or cable, and then branches taken off to each bell and switch.

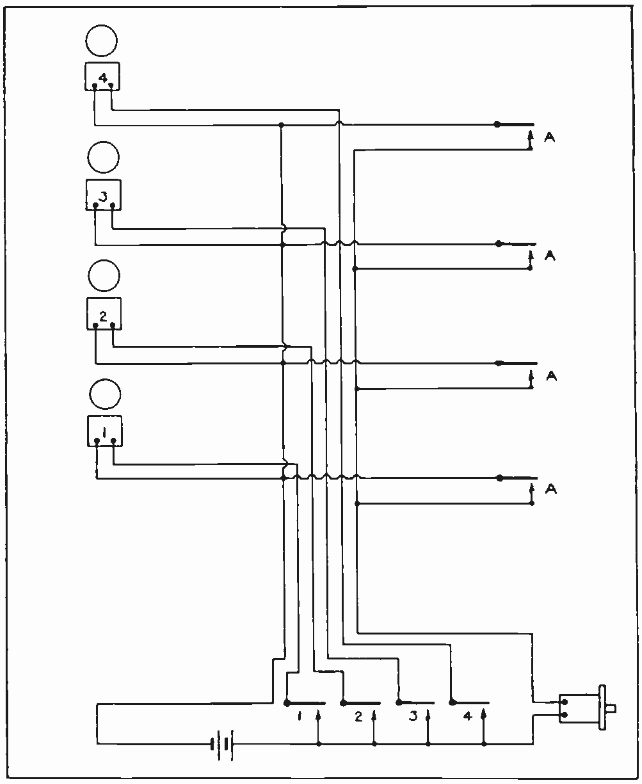

Fig. 75. Combination doorbell and magnetic door-opener system. Note the use of certain wires as common "Feeder" and "Return" wires.

Such a system is commonly used in connection with speaking tubes and telephones in apartment buildings, and could be extended to take in as many more floors or apartments as desired, just following the same scheme of connection as shown.

Any one of the buttons in the lower hall will ring its own bell of the same number. Then if the party is at home and wishes to admit the caller, any one of the apartment buttons marked "A" will operate the door lock.

Fig. 76 shows a similar system of apartment building calls and door opener, including also a buzzer at each apartment door, for parties within the building to use when calling at any other apartment, and without going down to the front door buttons. Trace the circuit and operation carefully.

51. HOTEL OR OFFICE CALL SYSTEM WITH ANNUNCIATOR.

Fig. 77 shows a selective, master call system that could be used very well in an office or hotel and many other places.

With this system a party at "A" can call any one of the parties "B", "C", or "D", by pressing

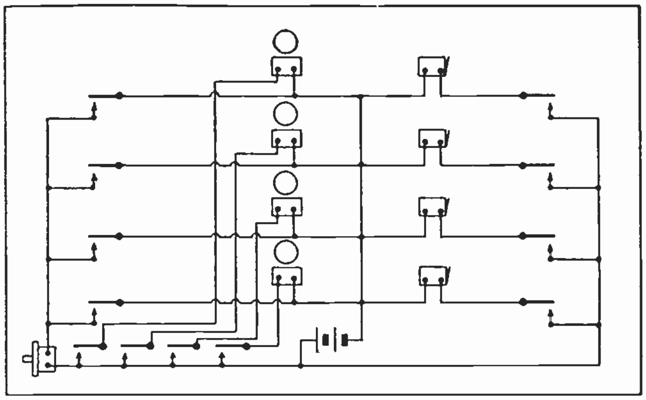

Fig. 76. Doorbell and door-opener system, including separate local buzzer circuits.

the proper buttons; or he can call them all at once by pressing the master button.

The party called can also answer back or acknowledge the call with their button, and the annunciator and buzzer show the response to party "A".

Or if "B", "C", or "D", wish to signal "A" at any time, the annunciator shows which one is calling.

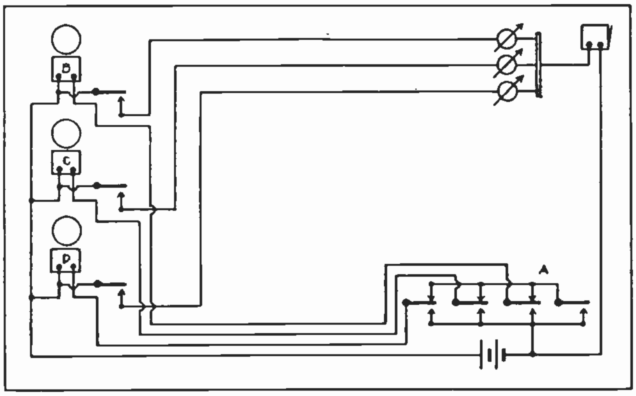

Fig. 77. Selective signal circuit with Master Control, return call and annunciator features. This is a very popular form of signal system.

52. SAVING WIRES BY SPECIAL GROUP CONNECTION, and SEPARATE BATTERIES.

Fig. 78 shows a method of connecting a large number of bells and switches in an extensive call system, and using separate batteries and a grouping system to reduce the number of main wires.

Any one of the buttons will ring its corresponding bell of the same letter, and by the use of the three separate batteries and **Cross Grouping** connection of the bells and switches, this can be done with seven vertical line wires, while with one battery it would require thirteen wires.

53. CLOSED CIRCUIT BURGLAR ALARM FOR TWO FLOORS OR APARTMENTS.

Fig. 79 shows a closed circuit burglar alarm system for two apartments or floors of a building, using an annunciator to indicate which floor the intruder has entered, and also a drop relay to keep the bell ringing constantly until some one is aroused and shuts it off.

Normally, when the system is in operation, current flows continually in the two relay circuits as shown by the small arrows. This keeps both relay armatures attracted, and no current flows in the annunciator, drop relay, or bell circuits.

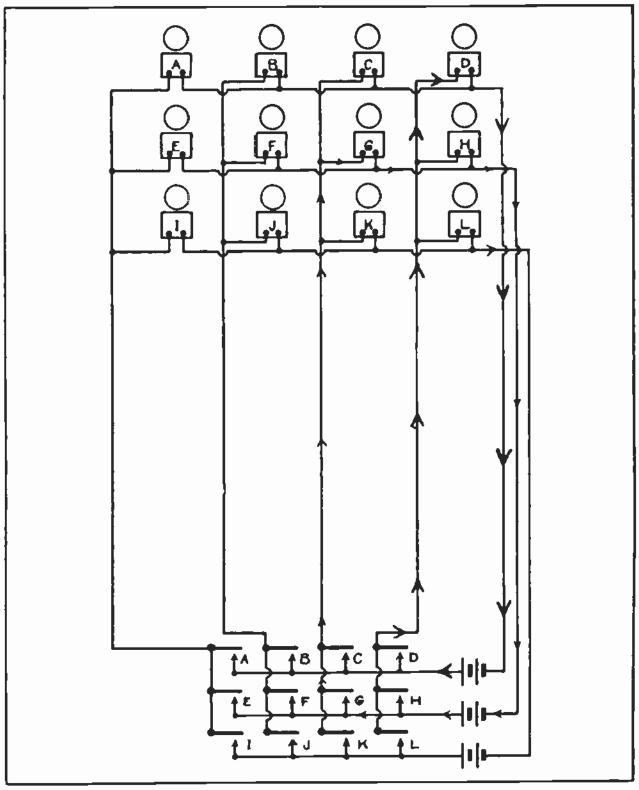

Fig. 78. "Group" method of connecting a large number of bells and switches to secure independent operation of each, with the least number of wires.

But as soon as any switch in either circuit "A" or "B", is disturbed, the relay current stops flowing, releasing the armature, and closing a circuit to the drop relay as shown by the dotted arrows. This trips the drop relay, starting the bell in operation. The bell circuit is shown with large arrows.

A system of this type using several separate circuits gives one an excellent chance to practice step by step tracing of each circuit, and the operation of all parts of the system.

54. SPECIAL ARRANGEMENT OF VIBRATING BELL FOR CONSTANT RINGING.

Fig. 80 shows a rather novel method of arranging a vibrating bell for a constant ringing alarm, without the use of a drop switch or relay. This is done by placing a piece of hard cardboard, fibre or hard rubber, between the make and break contacts of the bell. The spring tension of the armature should hold it there normally, but if cardboard is used it should not be too soft, or it may stick in place when it is released.

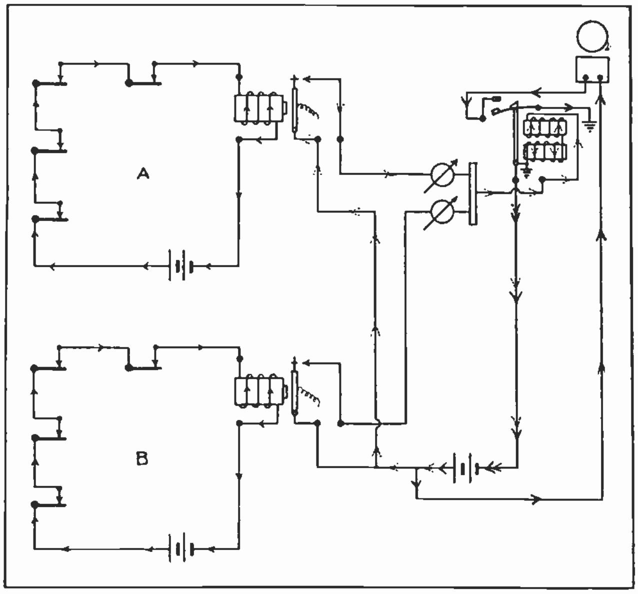

Fig. 79. Two section alarm system using a drop relay for constant ringing, also an annunciator to show which section of the building the alarm was disturbed in.

When one of the three open circuit alarm switches is closed, current will flow directly through the coils of the bell, attracting the armature and releasing the cardboard.

This starts the bell ringing until the switch "A" is opened. Swith "A" should be a lever switch or snap switch.

This system of course does not give the positive protection of a closed circuit system, or of one using a relay, but is very good for an emergency job, or one where the cost must be kept very low.

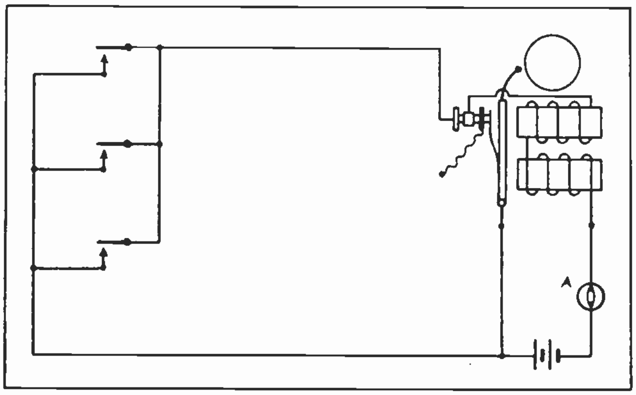

Fig. 80. Simple method of arranging an ordinary vibrating bell to secure constant ringing feature.

55. STICK RELAY CIRCUITS.

It is possible to connect an ordinary pony relay in an alarm circuit, so that it will provide constant ringing of the bell, without the use of a drop relay. This is done by connecting the relay to operate as a **Stick Relay.**

This term comes from the manner in which the relay armature closes a circuit to its own coil, and causes itself to stick and continue to feed the coil until it is forced away, or its circuit broken by another switch. (See Figure 81.)

This relay has its armature and bridge connected in series with its coil and the battery. Imagine you were to push the armature to the left with your finger, until it touched the bridge contact. What would happen? The armature would stick there, because as soon as it touches the bridge contact, it closes a circuit for current to flow through the coil to hold it.

Then to get the armature to go back to its normal position it would be necessary to force it away, in spite of the pull of the magnets, or to open the closed circuit switch at "A". This would stop the current flow through the coils, and allow the armature to release.

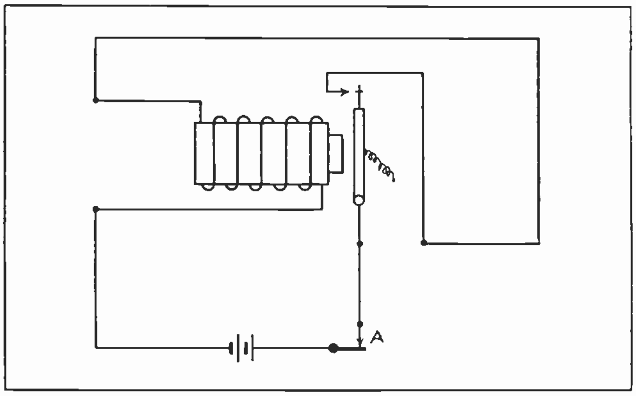

Fig. 81. Diagram illustrating the principle of a closed circuit stick relay.

Remember that to connect up a "stick relay," its armature and bridge must be connected so they will close and hold a circuit through the coils when the armature is attracted.

56. OPEN CIRCUIT STICK RELAYS.

Now let's see how we connect this stick relay in a simple open circuit, constant ringing alarm or call system, as in Fig. 82.

Here again we notice that the armature and bridge are in **Series** with the coils, and the bell is connected in **Parallel** with the coils. These are the

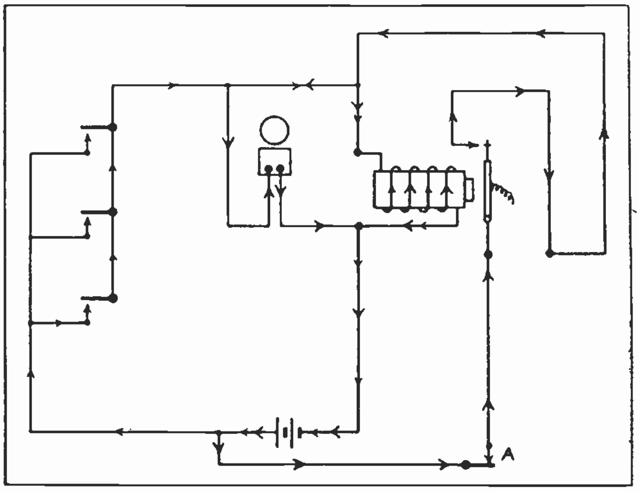

Fig. 82. Open circuit alarm system using a stick relay for constant ringing when alarm is tripped.

two principle rules to follow in arranging such a system.

The parallel group of open circuit switches is connected in series with the battery and relay coil.

Normally there is no current flowing in any part of this system, and the relay armature is not touching the bridge until the switches are disturbed. If any one of the open circuit switches is closed even for an instant, current will start to flow through the relay coils and bell in parallel, as shown by the small arrows.

This causes the armature to be attracted, and then it feeds current to both the coil and bell, even though the first switch is opened in case the burglar closes the window quickly.

The larger arrows show the path of current which keeps the relay coil energized and the bell ringing, after the system is tripped.

To stop the ringing of the bell and restore the system to normal "set" condition, we press the Reset Switch "A".

This stops the current flow through the coils long enough to release the armature; then we allow switch "A" to close again, and if the open circuit switches are again normal or open, the system remains quiet until again tripped.

57. DOUBLE CIRCUIT STICK RELAY.

In Fig. 83 is shown a double circuit "stick relay" system, which gives both the advantages of constant ringing and closed circuit reliability.

Here we have the relay armature, bridge, coils, closed circuit alarm switches and battery, all connected in series. An open circuit reset switch at "A" is used in this system. To set the system in order, this switch is pressed and current starts to flow at once, as shown by the dotted arrows. This energizes the relay coil and attracts the armature. Then the reset switch can be released, and the armature will stick in place, as it now feeds the coils, and a small current will flow continually as shown by the small solid arrows.

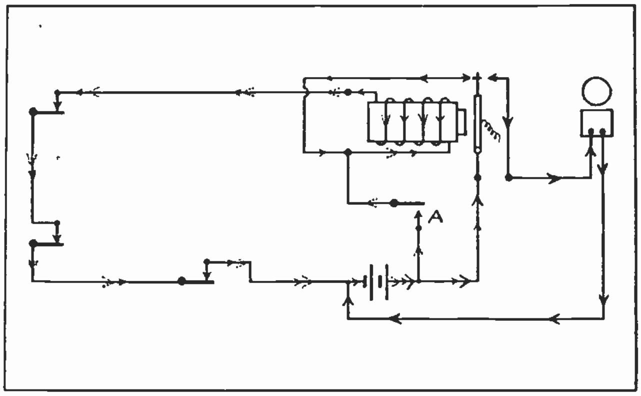

Fig. 83. Double circuit stick relay used in a closed circuit burglar alarm system. This is a very simple and efficient alarm circuit.

Now if any one of the closed circuit alarm switches is opened, the current stops flowing through the coil, releasing the armature, which closes a circuit to the bell, as shown by the large arrows.

This is a very simple and dependable alarm system, and one you may often have use for.

58. THREE SECTION ALARM SYSTEM.

Fig. 84 shows a system of this same type, with three separate sections for three different floors or apartments, and an annunciator to indicate which section is disturbed.

When an alarm switch in any one of the sections is opened, the relay sends current through the proper annunciator coil and keeps the bell ringing constantly until the reset button is pressed.

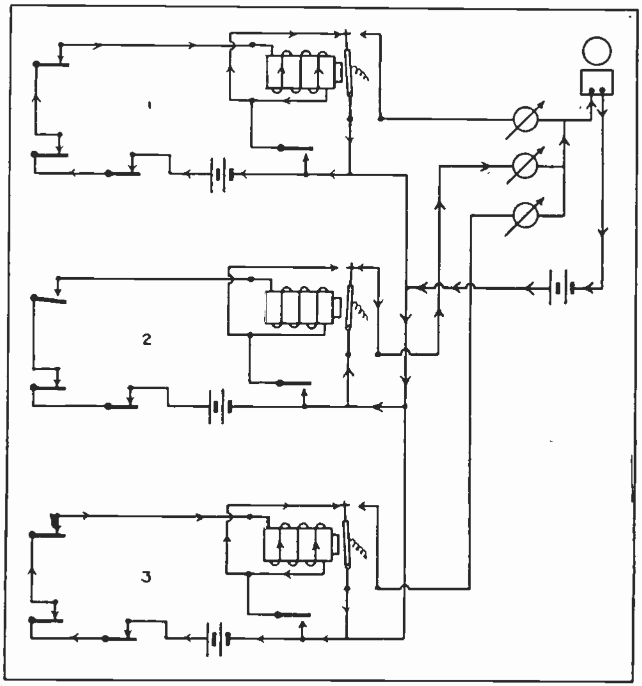

Fig. 84. Closed circuit burglar alarm system of three sections, each using stick relays for constant ringing; and an annunciator to indicate point of disturbance.

The relay armatures in this Figure and also the arrows, are shown as the system would be if sections 1 and 3 were normal, but section 2 has been disturbed causing the alarm to operate. Observe the armatures and arrows, and trace all circuits carefully to be sure you understand them.

At first glance such a diagram as Fig. 84 looks quite complicated and appears hard to understand, but you have probably found by now, that taking one section at a time, it can be traced out quite easily. This is true of even the largest circuit plans of telephone or power plant systems, and if you practice tracing each of these diagrams carefully, you will soon have confidence and ability to read any circuit plan.

59. COMBINATION CLOSED AND OPEN CIRCUIT ALARMS.

Fig. 85 shows a method of using double circuit switches to operate both the relay and annunciator in a closed circuit constant ringing system.

When any one of the alarm switches is pressed, it opens the relay coil circuit and closes the annunciator circuit at the same time.

In this system the annunciator shows exactly which window or door is disturbed.

A number of such circuits could be arranged to protect separate floors or apartments in a building, and then all connected together through one annunciator and alarm bell as in Fig. 84. The additional annunciator would then indicate to the watchman, janitor or owner, which floor or apartment the alarm came from.

The small arrows in Fig. 85 show where current will normally flow when the system is "set". The large arrows show where current would flow through both the annunciator and bell circuits, if switch number 2 was disturbed.

After this system is tripped and the bell is ringing what would you do to stop the bell and reset the alarm?

60. BURGLAR ALARM FOIL FOR WINDOW PROTECTION.

In addition to window and door contacts, switches and alarm traps, some alarm systems use tinfoil strips for the protection of glass windows or thin wood panels that could be easily broken.

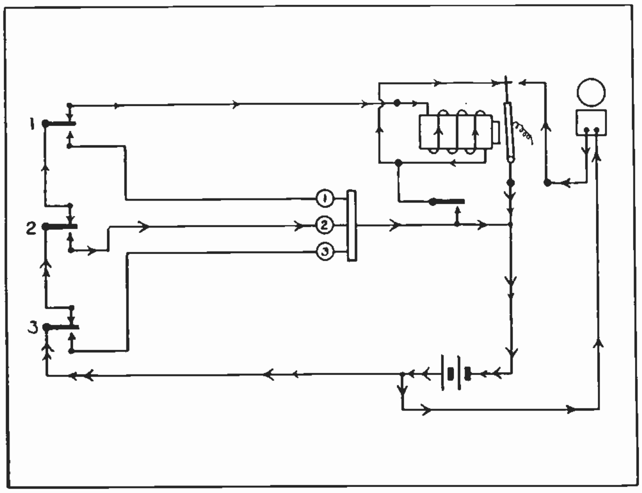

Fig. 85. Combination alarm system using double circuit switches to operate both the stick relay and the annunciator.

Tinfoil for this purpose can be bought in rolls, prepared for cementing to the inner surface of the glass or panel to be protected. It is then connected into the regular alarm circuit by attaching wires to its ends.

If the glass is broken it will crack the tinfoil and open the circuit, causing the alarm to operate.

Fig. 86 shows a large show window and small window above the door protected by burglar alarm foil, and the door and two small windows by door and window springs. All are connected in series to form the closed circuit for the relay coil.

Disturbance of any one will cause the bell to ring.

61. BALANCED ALARM SYSTEMS.

Burglar alarms can be arranged so that it is nearly impossible for even an expert to disturb or tamper with them without giving the alarm.

Fig. 87 shows a system using circuits of balanced resistance and a specially wound relay.

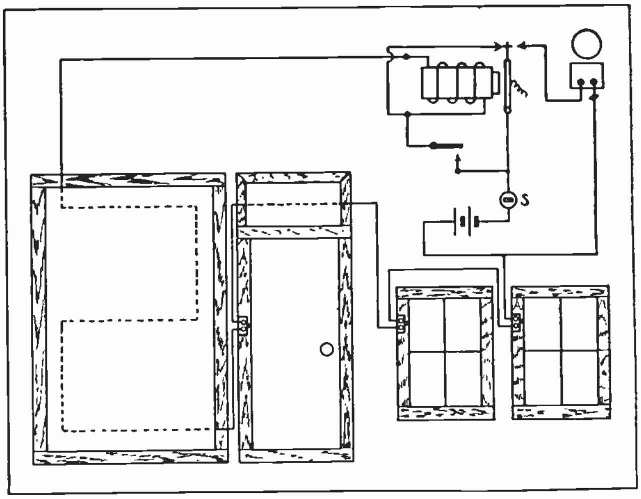

Fig. 86. This diagram shows the use and application of burglar alarm foil for the protection of glass windows and doors.

This relay has two coils wound in opposite directions on each core, so when current flows through them equally they create opposing magnetic flux and do not attract the armature.

The variable resistance at "A" is used to balance the current flow through coil "R", with that of coil "L", by being adjusted so that its resistance is equal to that of the entire alarm circuit. This circuit includes the wire, switches, and the resistance unit "B" which is in series with the closed circuit switches.

As long as the alarm circuit remains of equal resistance to that of the balancing circuit, the current from the battery divides evenly through coils "L" and "R". But if any switch is opened or closed, or the wires are changed, the resistance of the alarm circuit will be changed and more current will flow through one coil or the other, and magnetize the relay core.

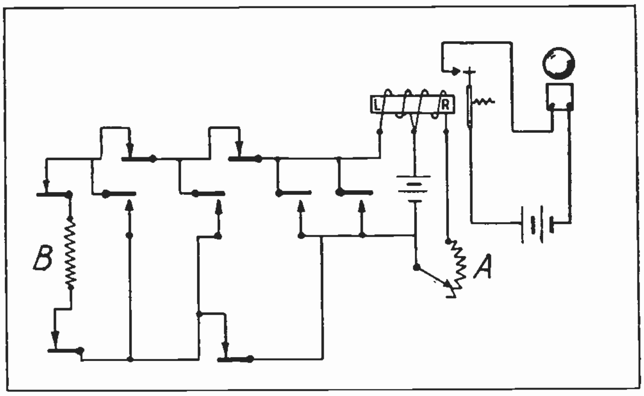

Fig. 87. Balanced resistance alarm circuit. This is a very dependable alarm system, as it is almost impossible to tamper with it without causing the alarm to sound.

For example, if any closed circuit switch is opened, the current through coil "L" stops flowing, leaving the flux of coil "R" unopposed and strong enough to attract the armature and cause the bell to ring. Or, if any open circuit switch is closed, it affords a much easier path than the normal one through resistance "B", and more current at once flows through coil "L", overcoming the opposing flux of coil "R", and again attracting the armature and ringing the bell.

Variations of this principle can be used in several ways in different types of alarm circuits, making them very dependable and safe from intentional or accidental damage.

62. LOCK SWITCH CONNECTIONS.

Fig. 88-A shows how a lock switch can be connected in a burglar alarm system, to allow the owner or watchman to enter the building without sounding the alarm, and also to turn off the system during the day.

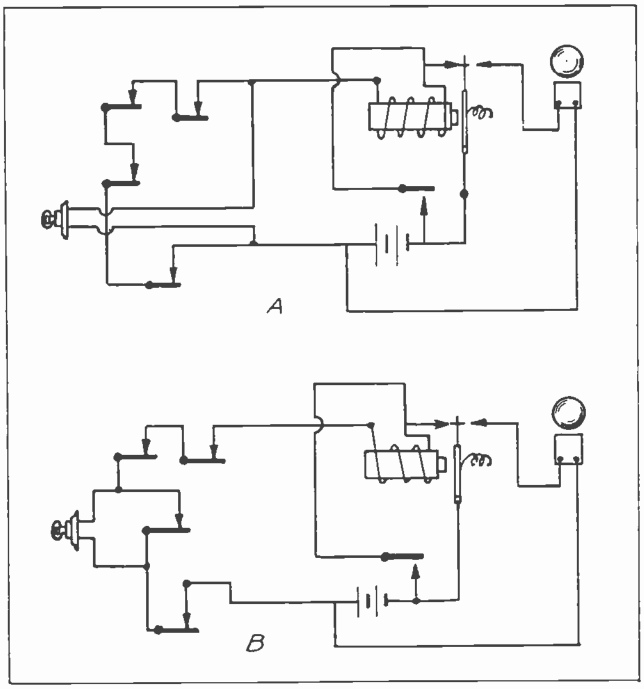

Fig. 88. These circuits "A" and "B" show two different methods of connecting a lock switch to a burglar alarm circuit.

This switch is connected in parallel with the entire line of switches here, and when it is locked closed, any of the others can be opened without tripping the alarm.

Or we can connect it to one switch only as in Fig. 88-B. In this case only the one door and switch can be opened. Then when the lock switch is again locked open, the alarm will operate if any other switch is opened.

63. FIRE ALARM DEVICES AND CIRCUITS.

Fire alarms are very similar in many ways to burglar alarms, using many of the same parts such as relays and bells; and also many of the same types of circuits.

The principle difference is in the types of switches used.

There are manually operated fire alarms and automatic ones; the manual alarms being merely a signal system by which someone sends a warning of fire when he sees it. The automatic alarms are those that are operated by the heat of the fire, and sends in the alarm without the aid of any person.

A very common type of manual fire alarm switch is the "break glass" type, in which the switch is held in a closed normal position by a small pane or window of glass. In case of fire the person sending the alarm merely breaks the glass, which allows the switch to open by spring action and give the alarm.

One of these devices is shown in Fig. 89. The illustration at the left, with the box closed, shows clearly how the glass holds the switch button compressed against a spring, and also the small iron hammer provided for convenience in breaking the glass. At the right the box is shown open and the switch button can be seen in the center.

Box Closed

Box Open

Fig. 89. Fire alarm box of the "break glass" type. Note the hammer used for breaking the glass, and the location of the push button in the box which has the cover open.

64. PULL BOXES AND CODE CALL DEVICES

Figs. 90 and 91 show two different types of fire alarm "pull boxes". To send an alarm from this type of box, the operator opens the door and pulls the hook or crank down as far as it will go and then releases it.

When it is pulled down it winds a spring inside, and when released the spring operates a wheel or notched cam that opens and closes a switch several times very rapidly. These notches or cams can be arranged to send a certain number of impulses in the form of dots and dashes, or numbered groups of dots, to indicate the location of any particular pull box.

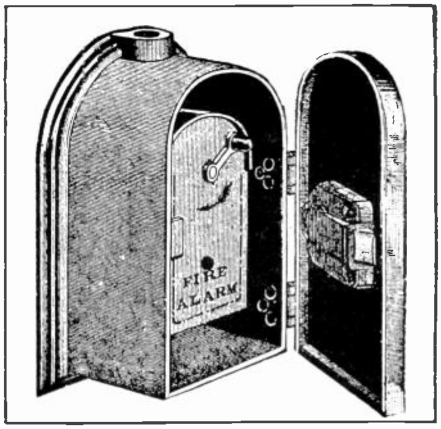

Fig. 90. This is a fire alarm "pull box" which sends in numerical or code signals to indicate its location.

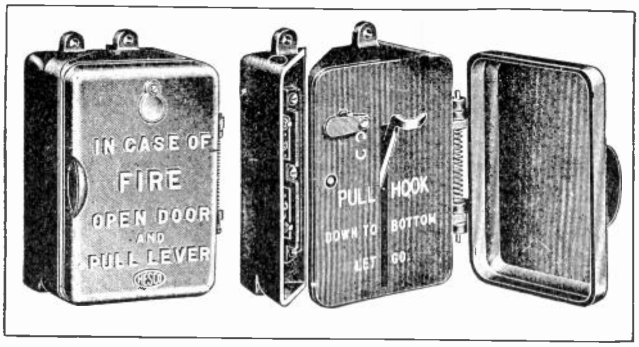

Fig. 91. Another type of fire alarm pull box which also sends code signals.

This enables the fire department crews to proceed direct to the location of the fire.

Fig. 92-A shows how a notched wheel can be arranged to open the contacts of a closed circuit fire alarm, giving a series of short signals and sounding the number 241. Fig. 92-B shows a cam wheel arranged to close the contacts of an open circuit system and send call number 123.

From this we see that such boxes are merely mechanically operated switches or sending keys.

Certain types of industrial or shop "code call" systems use a mechanism similar to these to send number calls for different parties in the plant. These will be explained later.

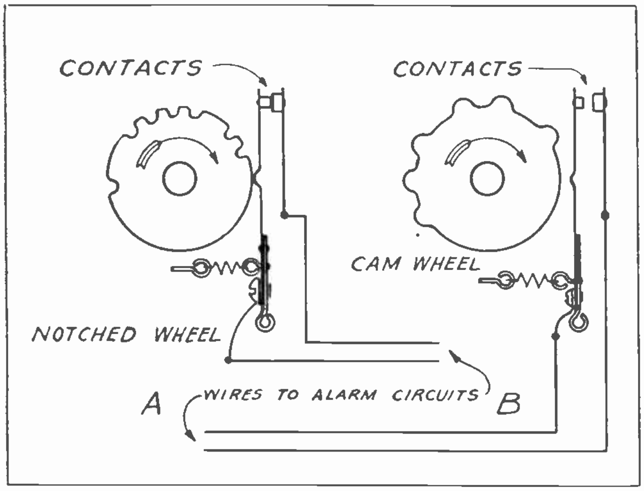

Fig. 92. This sketch shows the arrangement of the code wheel and contacts of closed and open circuit code call systems.

Fig. 93 shows a fire alarm control cabinet, which is used to control and check the condition of such systems. These cabinets are equipped with relays which receive the small impulses of current from the alarm box lines, and in turn close circuits sending heavier currents to the gongs or horns located near the cabinets.

Meters are also often provided for indicating the amount of current flow through closed circuit systems, and thereby show the condition of the circuits.

Note the diagram of connections which is in the cover of this cabinet, and is usually furnished by the manufacturer of such devices. So you can readily see what an advantage it is to know how to read these diagrams.

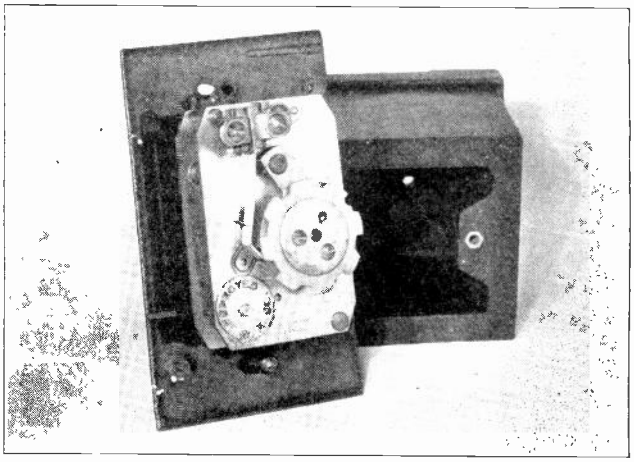

Fig. 92-C signal or alarm box of the code calling type, showing code wheel and contact springs.

65. SIGNAL RECORDERS

In fire alarm, bank burglar alarm, and police call systems, it is often desired to keep a record of the numerical code call sent in by the signal box, in addition to hearing the call sounded on the bell or horn. This helps to prevent mistakes in determining where the call comes from.

For this purpose we have recording machines which mark or punch the call on a moving paper tape as the signal comes in, thus giving an accurate and permanent record of it. Such a device is shown in Fig. 94.

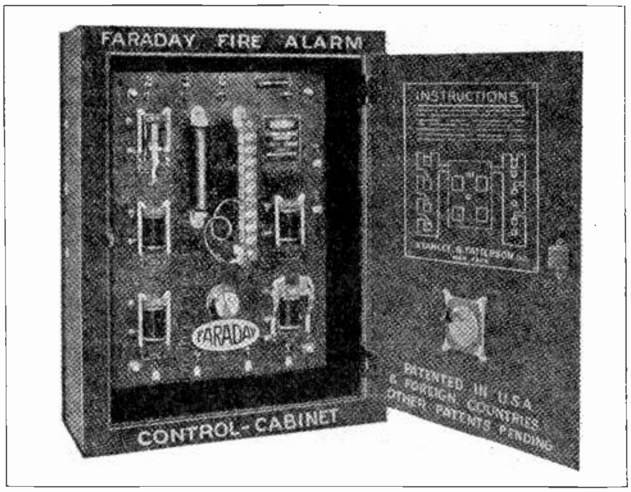

Fig. 93. Fire alarm control cabinet, showing relays, test meter, and connection diagram.

There is a spring and clockwork mechanism kept wound and ready to pull the tape through, at a definite speed. The first impulse of the signal operates a relay or magnetic trip that releases or starts the spring and tape.

Then another magnet operates a small pen arm, shown on the outside of the box in this case, and marks every impulse on the tape in the form of dots and dashes.

Automatic fire alarms use thermostatic switches or fusible links, to open or close circuits and send an alarm as soon as a certain temperature is reached. This type of system is very valuable in warehouses and buildings where no people or watchman are about to notice a fire immediately.

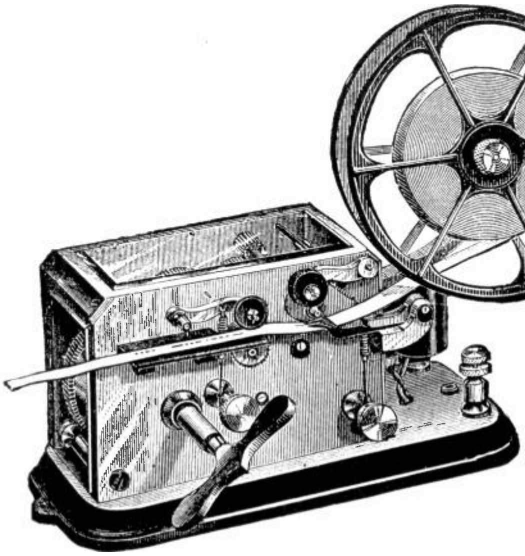

Fig. 94. Recording device for receiving code calls on paper tape. Fire and police departments use such recorders extensively.

Thermostatic switches can be set or adjusted so a rise of even a few degrees above normal temperature will cause them to close a circuit almost immediately.

One switch of this type was explained in Art. 15 of this section. Another type is shown in Fig. 95. There are various types in use but all are quite simple and merely use the expansion of metals when heated, to close or open the contacts.

Any number of such thermostats can be connected on a fire alarm circuit to operate one general alarm, through the proper relays.

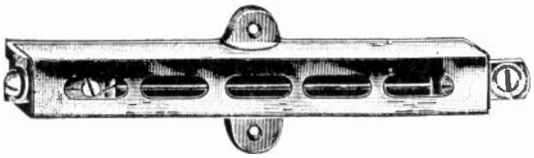

Fig. 95. One type of thermostatic fire alarm switch, that can be adjusted to open or close an alarm circuit by expansion at temperatures above normal.

66. FUSIBLE LINKS FOR FIRE ALARMS

The fusible link fire alarm is made of a soft metal alloy something like electrical fuse material. Some of these metals are made which will actually melt in warm water, or at temperatures of 125 degrees and up. Such fusible links can be located at various points where fire might occur, and all connected in series in the alarm circuit. If any one is melted by fire or excessive heat near it, the circuit will be broken and the alarm operated.

Fig. 96 shows a fire alarm system in which all three types of switches are used. The "break glass" switches can be located where they are easily accessible to persons who might observe the fire, and the thermostats and links installed in other places in the building where no one is likely to be.

In this sketch, "A" and "A-1" are fusible link switches. "B" and "B-1" are "break glass" switches, and "C" and "C-1" are thermostatic switches. All of these are of the closed circuit type. In addition to these, an open circuit thermostat switch is shown at "D" to operate the bell direct in case of fire near the relay and alarm equipment. Fig. 96-A shows a fire alarm fuse or link.

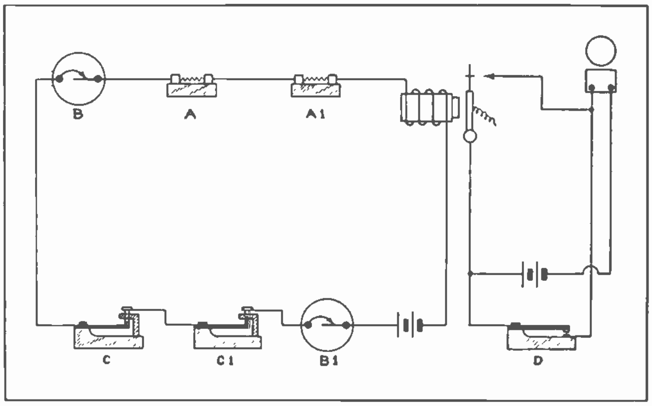

Fig. 96. This sketch shows the connection of several different types of fire alarm switches in one system.

67. INDUSTRIAL SIGNALS AND HEAVY DUTY BELLS

In factories, industrial plants and power plants, where signals are used to call department foremen and various employees, and the noise would make ordinary small bells difficult to hear, large heavy duty bells or horns are used.

The bells used for such work are very similar to the smaller ones, but are much larger and are usually wound to operate on 110 volts. Instead of using the vibrating armature pivoted on one end, they often use a rod for the hammer. This rod is operated by the magnets in the case. Two bells of this type are shown in Fig. 97, and the hammer rod can be seen under the gong of the larger bell.

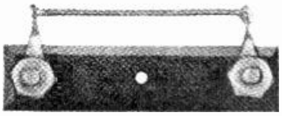

Fig. 96-A. Fire alarm fuse which melts when heated above normal temperature, opening the circuit and causing alarm to sound.

68. SIGNAL HORNS OR "HOWLERS"

Horns have a very penetrating note and for very noisy places are often preferred to bells. They are made to operate on either D. C. or A. C., and at

110 volts, or can be obtained for any voltage from 6 to 250.

Some such horns are made with a vibrator which strikes a thin metal diaphragm at the inner end of the horn. Others have small electric motors which rotate a notched wheel against a hard metal cam on the diaphragm, causing it to vibrate or "howl" loudly. Many of these horns are called "howlers".

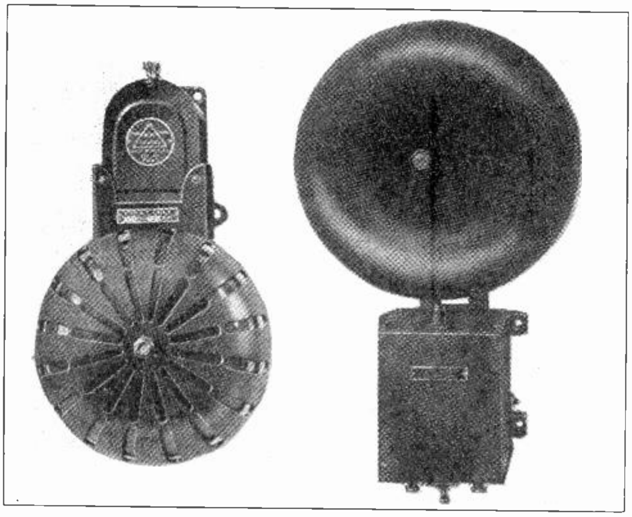

Fig. 97. Two types of large heavy duty bells for use in industrial plants or noisy places.

Fig. 98 shows two horns of the vibrator type, and Fig. 99 shows one of the motor operated type.

Fig. 100 is a sectional view of a motor horn, showing all its parts.

Heavy duty bells and horns require more current to operate them, than can be handled by the ordinary small push button, and these low voltage push buttons should not be used on 110 volts.

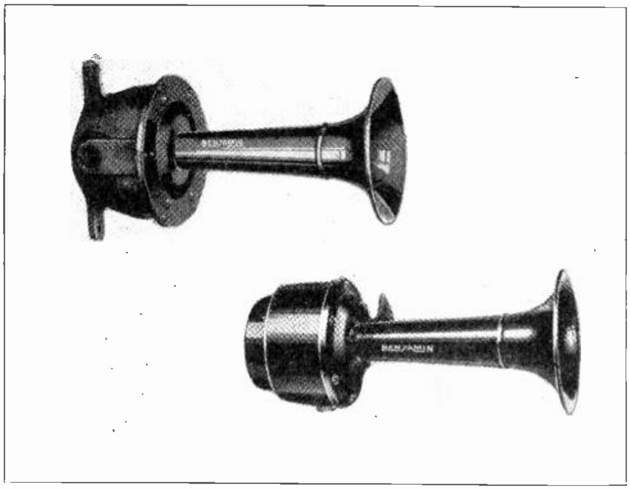

Fig. 98. Two styles of signal horns using magnetic vibrators to produce a loud note.

So we usually connect the switches to a special relay which has heavy carbon contacts, to close the high voltage and heavier current circuit to the bells or horns.

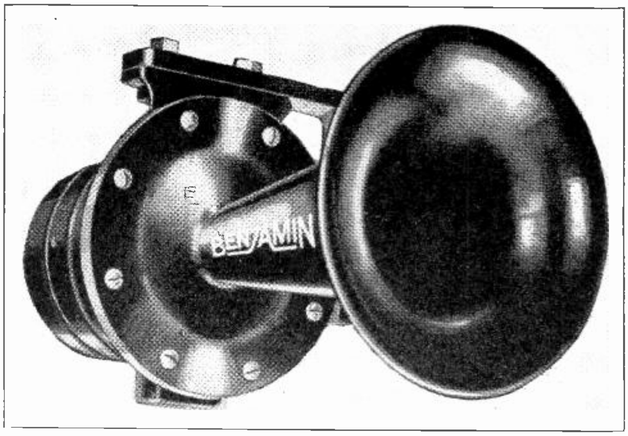

Fig. 99. Motor operated signal horn which produces a very penetrating note, and is excellent for industrial and power-plant use. *(Photo courtesy of Benjamin Electric Company.)*

Fig. 101 shows the connection diagram for a group of horns with such a relay.

69. AUTOMATIC SIGNALING MACHINES

In large plants where a great number of different numerical or code calls are used for signaling different parties, an automatic signaling machine is often used. With this device, the operator simply pushes a button for a certain call, and this releases or starts a spring or motor operated disk or code wheel, which sends the proper signal or number of impulses properly timed, in a manner similar to the fire alarm already explained.

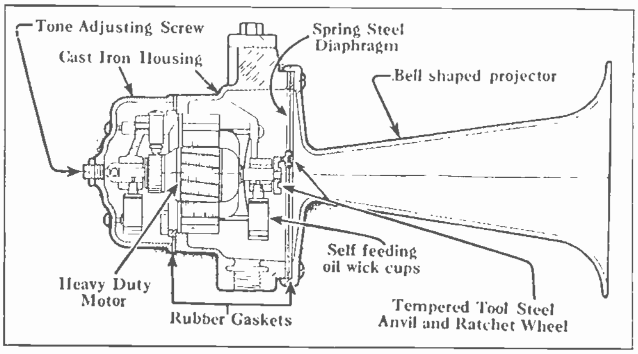

Fig. 100. Sectional view showing parts and construction of motor operated horn. *(Sketch courtesy of Benjamin Electric Company.)*

A box with a number of these buttons and wheels can be used to conveniently call any one of a number of parties, by just pressing the proper button once, and this does not require the operator to remember a number of code calls.

A diagram for connecting such a device to signal horns operated from a transformer is shown in Fig. 102.

Extra push buttons are also shown for sending special calls not included on the automatic signal box.

A time clock is also connected in this system to sound the horns at starting and quitting periods for the employees.

These clocks have two program wheels, one of which revolves with the hour hand, and one with

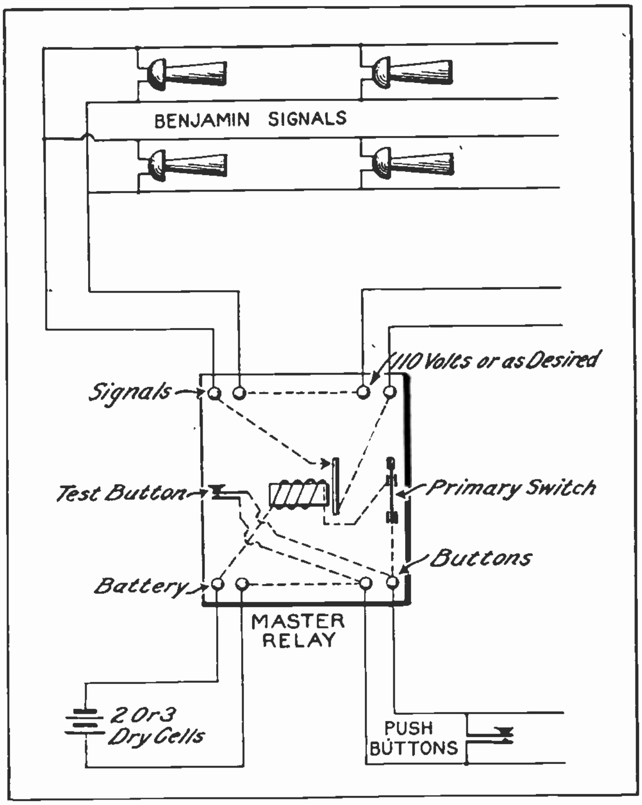

Fig. 101. Connection diagram for signal horns and Master relay. This relay operates on low voltage and very small current, and closes a high voltage, heavy current, circuit to the horns. *(Courtesy Benjamin Electric Company.)*

the minute hand. These wheels carry adjustable lugs or projections which open or close electrical contacts as they come around.

Schools often use these program clocks with signal systems, to start and dismiss various classes.

70. INSTALLATION OF CALL AND SIGNAL SYSTEMS

Now that you have learned the operating principles of these signal devices and circuits, and know how to trace and understand the diagrams and plans, you will want to know more about how to install them.

In making any electrical installation, the first thing should be the plan or layout, and circuit diagram. So as soon as we have decided upon the type of system desired and how it should operate to give best service, we should decide on the location of the various parts, and then lay out the circuits accordingly.

Of course in many cases a complete plan is furnished for new installations, by the architects in case of new buildings, or the engineering or construction departments of large power or industrial plants. But if such plans are not furnished, you should at least make up a rough layout before any work is started.

This can be drawn approximately to scale for the various distances between devices, or length of wire runs, and this will enable you to estimate and select the required materials with best economy.

Then, by following a circuit diagram, many mistakes and time losses can be avoided in making the final connections.

In drawing up plans, or in copying them from other prints, it is usually much easier to locate the parts and devices on the paper first, in about the same location and proportional spacing as in the original plan, or as they are to be installed in the building. Then draw in the wires and circuits one at a time, keeping them as straight and simple as possible. Make the wires and connections first to get the desired operation and results. Then go over the plan again, and possibly redraw it to simplify it and shorten wires, making use of "common wires" eliminating unnecessary crossed wires, etc.

71. LAYOUT OR LOCATION OF PARTS IN THE BUILDING

By going carefully over the building with these plans, and using good common sense in choosing the location for the various devices and wire runs, you can also help to make the most satisfactory job and save additional time and labor in the installation.

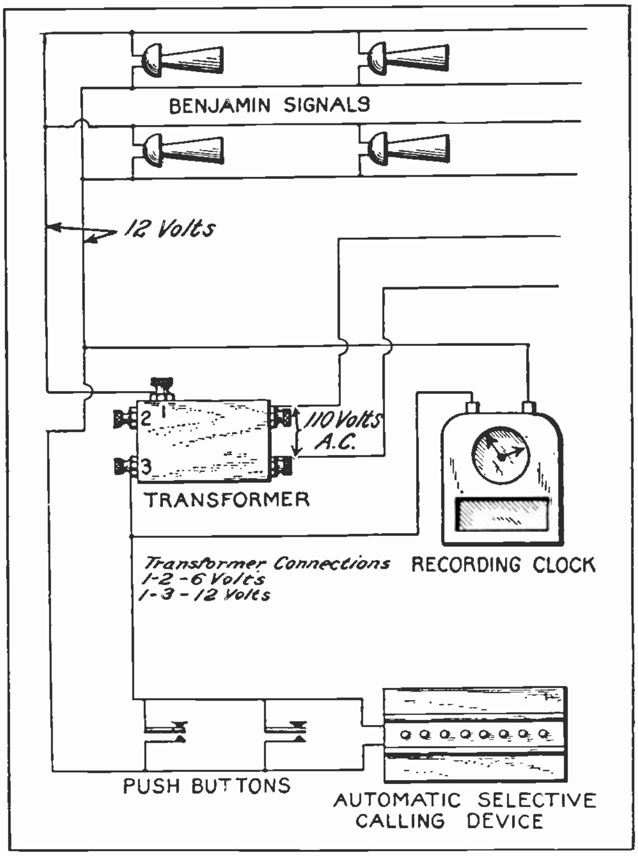

Fig. 102. This diagram shows the connections for signal horns operated from a transformer, and controlled either by a time clock or automatic signal device. *(Courtesy Benjamin Electric Company.)*

For example, when installing a simple door bell system in a home, the bell should be located in a rear room, probably the kitchen, because both its noise and appearance would likely be objectionable in the parlor or dining room. Usually some "out of the way" place can be found in a corner or hall or behind a door, and preferably quite high from the floor, so it is out of reach of children and safe from accidental damage. By considering where the wires can best enter the room and placing the bell on this side if possible, time and material may be saved.

The battery or transformer should usually be located in the basement or attic near to the bell or wires. However, the battery or transformer can sometimes be located on a small shelf or attached to the wall right with the bell, or in a small box.

The buttons of course must be located at the proper doors, and preferably on the door casing. Their height should be carefully chosen to be within convenient reach of grown-ups, but usually not low enough for small children to reach, unless by special request of the owner.

72. RUNNING THE WIRES

All wires should be run concealed whenever possible. Very often it is possible to drill two small holes in the door casing strip directly beneath the button and, by loosening the strip, run the wires under it to the basement or attic.

If it is not possible to get behind the strip, perhaps the holes can be drilled at an angle to get the wires into the edge of a hollow wall. Or, if necessary, they can be run in the corner at the edge of the door casing and covered with a strip of wood or metal moulding.

Where wires can be run through the basement or attic they can usually be stapled along the basement ceiling or attic floor. Care should be taken to run wires where they will be least likely to receive injury, and they should always be run as straight and neatly as possible.

Sometimes it is advisable to lay a narrow board to run the wires on across ceiling or floor joists in unfinished basements or attics, or even to cover the wires with a board.

When making long runs of wire always keep in mind the saving of time and material that can be made by using a common feeder wire to a number of switches, or a common return wire from bells to battery. This should also be carefully considered when laying out the diagram and plans.

Where it is desired to run wires vertically through walls, they can be **"Fished"** through by dropping a weight on a string from the upper opening to the lower one. This device is often called a **"Mouse"**. If the weight or "mouse" does not fall out of the lower hole, the string can be caught with a stiff wire hook and pulled out of the hole.

Then the wires can be pulled through with this string, or if necessary another heavier cord can be pulled through first, if the wires are too long and numerous to be drawn in by the light cord on the "mouse".

In horizontal runs through walls a steel **"Fish Tape"** can be pushed through first, and hooked or snared at the outlet opening, then drawn through with the signal wires attached.

A little "kink" that often comes in very handy in either signal or light wiring is as follows:

When you desire to locate the exact spot to drill up or make the hole in the basement ceiling, so that it will come directly under the center of the partition above, or some other certain spot, stick the point of a magnetized file in the floor above or ceiling below, and then use a pocket compass to locate this spot on the other side.

The compass needle will be attracted by the file tip. Moving the compass around will locate the center of attraction, which should be the point directly opposite the file tip. Then measure the distance between the spot located by the compass and to the edge of the partition, and add one-half the thickness of the partition. Measure off this distance in the same direction from the file and you should have a point about in the center of the partition.

In other cases measurements in two directions from certain outside walls may be accurate enough.

Sometimes an exact spot can be located best by drilling through the wall or floor with a long thin feeler drill, 1/8 or 3/16 in diameter.

If the hole does not come near the exact spot desired, it will serve as an accurate point to measure from, and can be easily plugged and concealed afterward.

Fig. 103-A shows how to use the magnetized file and compass and make the measurements to locate the center of partition. Fig. 103-B shows by the dotted lines how the small "feeler" holes can be drilled for the same purpose. The first hole should be drilled down at the proper angle and the second one drilled up, to try to strike the center of the

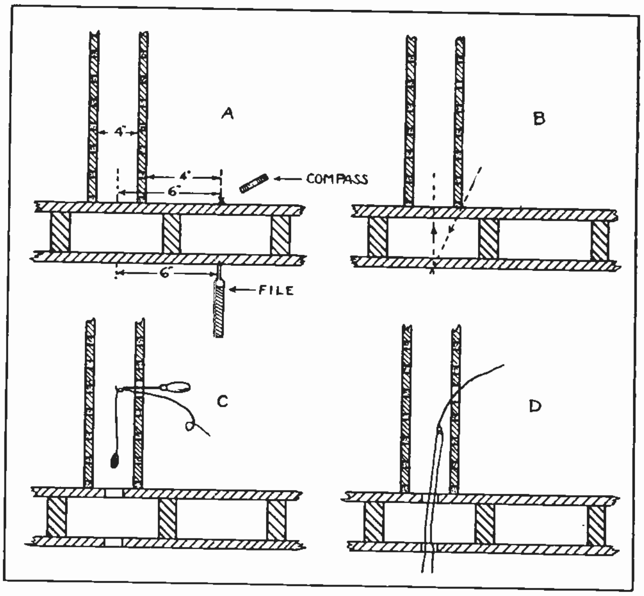

Fig. 103-A. Sketch showing uses of magnetized file and compass to locate spot to drill for wires. "B," dotted lines show how the "feeler drill" can be used. "C," dropping a "mouse" on a string, through holes in wall and floor. "D," pulling the wires in with the cord which was attached to the "mouse."

partition. Or, the first one can be drilled straight down and then the proper distance measured over to partition.

Figs. 103-C and 103-D show the method of dropping a "mouse" through the holes and pulling the wires in.

73. RUNNING SIGNAL WIRES IN CONDUIT

In some cases, especially in modern fireproof office or factory buildings, signal wires are run in conduit. Conduit, as previously mentioned, is iron pipe in which the wires are run for protection from injury and to provide greater safety.

Signal wires should always be run in separate conduits of their own, and never with wires of the higher voltage lighting system.

A fish tape is usually pushed through the conduit first, and used to pull the wires in.

74. TESTING TO LOCATE PROPER WIRES FOR CONNECTIONS

When a number of wires all alike and without color markings are run in one conduit, cable or group, it is easy to find the two ends of each wire by a simple test with a battery and bell, or test lamp.

Simply connect one wire to the conduit at one end, and then attach the bell and battery to the conduit at the other end, and try each of the wires on the bell, until the one that rings it is found. This is the same wire attached to the conduit at the other end. (See Fig. 104-A.) Mark or tag these ends both No. 1 or both "A", and proceed to locate and mark the others in the same manner.

When testing or "ringing out" wires in a cable or open group with no conduit in use, very often some other ground to earth or some piping system, can be obtained at each end, making it easy to test the wires. (See Fig. 104-B.)

75. TROUBLE TESTS

When troubles such as grounds, opens or shorts occur in wires in conduit, the fault can be located as follows:

Suppose one wire is suspected of being broken or "open." Connect all the wire ends to the conduit at one end of the line, as in Fig. 104-C. Then test with the bell and battery at the other end, from the conduit to each wire. The good wires will each cause the bell to ring, but No. 2, which is broken at "X" will not cause the bell to ring, unless its broken end happens to touch the conduit.

When testing for short-circuits between wires, disconnect all wires from the devices at each end of the line and test as in Fig. 104-D.

When the bell is connected to wires Nos. 1 and 2 it will ring, as they are shorted or touching each other at "X", through damaged insulation. Connecting the bell to any other pair will not cause it to ring.

Sometimes one wire becomes grounded to the conduit because of defective insulation as in Fig. 104-E.

For this test we again disconnect the devices from the wires, and connect the test bell and battery as shown.

With one test lead on the conduit, try the other lead on each wire. It will not ring on Nos. 1, 2, or 3, but will ring on No. 4 which is touching the pipe at "X", thus making a closed circuit for the test bell.

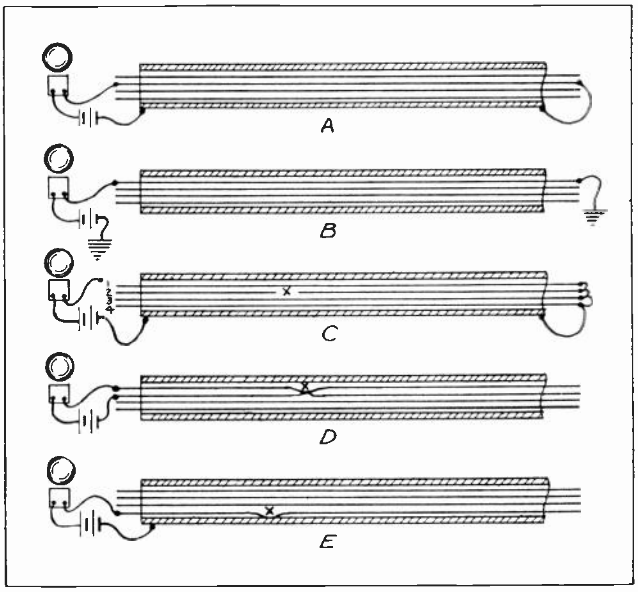

Fig. 104. Sketches showing methods of testing for various faults in wires run in conduit. Compare carefully with test instructions given.

76. EMERGENCY WIRES, AND PULLING-IN REPLACEMENTS

Where long runs of wires are installed in conduit or signal cables, it is common practice to include one or more extra wires for use in case any of the others become damaged.

This is especially good practice with cables, because it is difficult to remove or repair the broken wire. In a conduit system, where no extra wires are provided and a new wire must be run in to replace a broken or grounded one, it is sometimes easier to pull out all wires, and pull a new one back in with them.

Where this is not practical or possible, it sometimes saves time and money to pull out the broken or bad wire, and then attach two good wires to the end of one of the remaining wires, and pull it out, pulling in the two good ones with it. This replaces both the bad wire and the one good wire pulled out.

If the bad wire was not broken but only grounded, it can be used to pull in the new wire; but, of course, a broken wire cannot be used for this purpose. Therefore, it is often advisable to sacrifice one good wire, to pull in two new ones.

The several tests and methods just explained are very valuable and should be thoroughly understood, for they can be used on other wiring systems besides signal wiring.

While some of these tests were explained for wires in conduit, they can be also used on groups of open wires or cabled wires, by using in place of the conduit, some other ground or an extra wire, run temporarily for the tests.

77. SIGNAL WIRING MATERIALS

Now for the materials. In addition to the bell, battery or transformer, and push button switches, we will need the proper amount of wire, and in case of open wiring, staples to fasten it.

Ordinary bell or annunciator wire as it is called, is usually No. 16 or No. 18, B. & S. gauge, and is insulated with waxed cotton covering. It can be bought in small rolls of ½ lb. and up, or on spools of 1 lb., 5 lbs. or more. It can also be bought in single wires, or twisted pairs, and with various colored insulation.

Where several wires are to be run together, the use of different colors helps to easily locate the proper ends for final connection.

For damp locations, where the cotton insulation might not be sufficient, wire can be obtained with a light rubber insulation and cotton braid over it.

As ordinary door bells use only very low voltage, it is not necessary that the wires be so heavily insulated. In many cases they can be run with no other protection, such as conduit or mouldings.

To fasten the wires we use staples which have paper insulation to prevent them from cutting into insulation of the wire. However, these staples should not be driven too tightly down on the wires, and never over crossed wires, or they may cut through the insulation, causing a short circuit. Such a "short" under a staple is often hard to locate, and great care should always be used in placing and driving the staples.

Small cleats with grooves for each wire, and holes for screws to fasten them, are sometimes used. In other cases where twisted pairs of wires are run, a small nail with a broad insulating head is driven between the two wires, so the head holds them both. Fig. 105 shows several sizes of insulated staples, and Fig. 106 shows the nail and cleats mentioned.

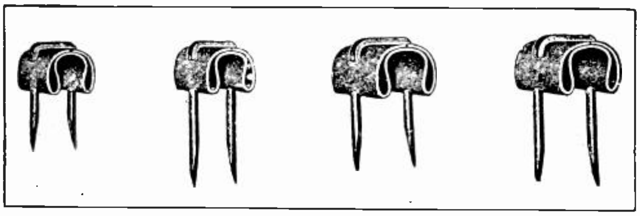

Fig. 105. Several different sizes and styles of insulated staples used in bell wiring.

On installations where a large number of wires are to be run in a group, cables with the desired number of wires can be obtained. These wires are usually marked by different colored insulation, so that the ends of any certain wire can be quickly and easily located at each end of the cable. Such cables simplify the running of the wires, save space and time, and make a much neater job in offices and places where numerous separate wires would be undesirable.

In large signal installations terminal blocks are used on some of the equipment, and all wires of the devices are brought to numbered terminals on these blocks. Then with the plans, on which the wires can also be numbered, it is very simple to make proper connections of cables with dozens or even hundreds of wires.

This is common practice with telephone installations and elevator signals, and also on modern radio sets, as well as for office and industrial call systems.

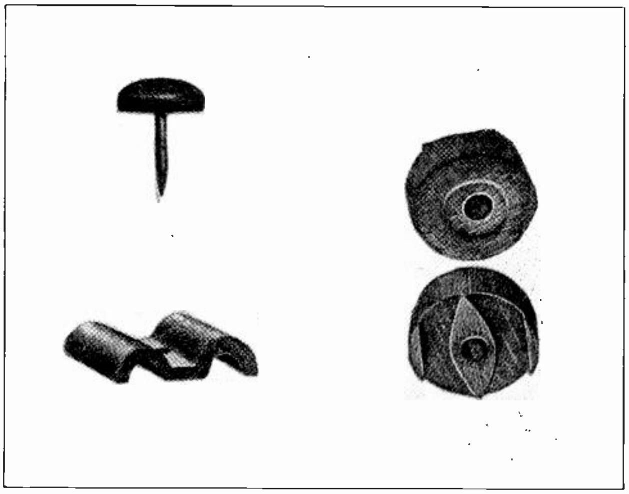

Fig. 106. Bell wires can also be fastened with the large headed nails and cleats shown here.

78. CAUTION NECESSARY FOR SAFE AND RELIABLE WIRING

Considerable care should be used when drawing bell wires through holes and openings, or the insulation may be damaged. Where the wires are left against the edge of a hole they should be protected from damage by vibration and wear, by means of a piece of hollow "loom" or insulating tubing slipped over the wires and taped in place. Also, where wires cross pipes or other wires, they should be well protected with such extra insulation.

Even though signal and bell wires carry low voltage and small current, they are capable of creating sparks and starting fires if carelessly installed.

So, for this reason and also that the finished system will give good service, all signal work should be done with proper care.

Low voltage signal wires must never be run in the same conduits with higher voltage lighting or power wires as it is very dangerous, and is also a violation of the National Electric Code, which will be explained in later sections.

If such wires were run with high voltage ones, and a defect should occur in the high voltage wires and allow them to touch the signal wires with their thinner insulation, it would create a serious fire and shock hazard.

When installing bell transformers, the wires from the lighting circuit to the transformer primary must be regular No. 14 rubber covered lighting wire, and must run in conduit, B X, or approved fashion for 110 volt wiring, according to the code of that particular town or territory they are in.

When making splices or connections to devices all wires should be well cleaned of insulation and all connections carefully made and well tightened. Splices in wires should be carefully soldered and well taped, to make secure and well insulated joints.

Any bell or signal system should be thoroughly tested before leaving it as a finished job. Pride in your work and neatness and thoroughness in every job should be your rule in all electrical work. That will be the surest way to make satisfied customers and success, in your job or business.

79. TROUBLE SHOOTING

In each section of this work on signal devices and circuits, common troubles and methods of locating them have been covered. In order to apply your knowledge of these things to solve any troubles in signal systems, your first step should be to get a good mental picture of the system, either from the plan or by looking over the system and making a rough sketch of the devices and connections.

Then go over it one part at a time **Coolly** and **Carefully,** and try to determine from the faulty action or symptoms of the system where the trouble may be.

80. KEEP COOL AND USE A PLAN AND A SYSTEM

A great mistake made by many untrained men in trouble shooting, is that they get rattled and worried as soon as they encounter a difficult problem of this nature. They forget that a plan or rough sketch of the wiring will usually be of the greatest help, and they make a few wild guesses as to what the trouble is. If these don't hit it, they often get still more rattled and indefinite in their efforts, and as a result sometimes mess up the system making it worse instead of improving it.

Remember that **Every Trouble Can Be Found,** and **Someone Is Going to Find It.** If you can do it, it will be to your credit and often put money in your pocket, or get you a promotion.

And you can find any fault, by thoughtful systematic testing of each circuit and device and applying the knowledge you have of this work.

In general, a good rule to follow is to first test the source of current supply. See that it is alive and at proper voltage. A test lamp or voltmeter will do this nicely.

Then test the devices that fail to operate, using a portable battery and test wires to make sure the device itself is not at fault, or has no loose terminals.

If both the supply and all bells, relays, and switches are tested and O. K., then start testing the main wires and circuits with the proper switches closed to energize them. Use a test lamp of the proper voltage, or a voltmeter, to make sure the current can get through the lines.

Any time you are not sure just how to test the wires, just refer back to Article 75 of this section and refresh your memory on the various steps.

No one can remember all these things perfectly the first time, but referring back to them and trying them out on the job at every opportunity is the quickest and surest way to fix them in your mind.

Never be ashamed to refer to a plan or notes when you have a problem of connection or other trouble. The most successful electricians and engineers do it daily.

When a system has several separate circuits, test them one at a time and mark them off on the plan or sketch as each is proven O. K. In this manner you know at all times how far you have gone, and where to look next, and can feel sure of cornering the trouble in one of the circuits or devices.

Remember a portable battery and bell, buzzer, or test lamp, and a few pieces of test wire, used with a knowledge of the purpose and principles of the circuits and devices, and plain common sense, will locate almost any signal trouble.

When any certain device is found to be out of order, you also have its troubles and repairs covered in the section on that device, in this Reference Set. Refer to it if you need to.

Welcome every "trouble shooting" job as a chance to get some excellent experience.

81. PUTTING YOUR TRAINING INTO PRACTICE

Now, if you have made a careful study of this section so far, and have properly completed your shop work in the department, you should be able to install almost any ordinary call or signal system.

You may doubt your ability to do this, but that is natural at first, as most of us have felt this way on our first jobs. But the thing to do is to get out and try it the first time you have an opportunity after graduation.

Start with a small job if you wish, and you will quickly find that you can apply every principle covered in this Set and in your shop work. After the first job or two, your confidence will grow and you will be ready to tackle any work of this nature.

Many hundreds of our graduates have started their present successful contracting businesses by a few bell wiring jobs at first.

Fig. 107 shows a floor plan of a house equipped with a modern bell call system, that affords great convenience in any home. Here are shown front and back door buttons, and buttons to call a maid from the parlor, bedroom, or dining room. An annunciator indicates which door or which room any call comes from. The switch in the dining room can be a floor switch under the table for foot operation, while those in the other rooms can be neat push buttons in convenient locations on the walls.

In homes where no maid is kept, several of these buttons may not be necessary, but practically every home should have a door bell.

They are becoming quite popular in many rural and farm homes. And in these homes a call bell from the house to the barn or garage is often a great convenience.

In Fig. 107 the wires are shown in a simple layout to be easily traced, but they should be run through the basement or attic, or through the walls where necessary.

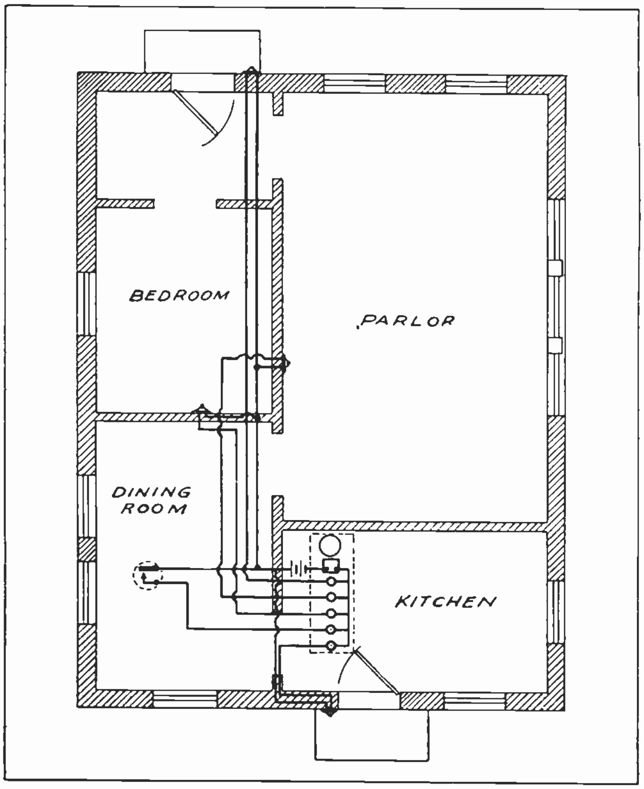

Fig. 107. Diagram showing layout of wiring for doorbell and convenience call system with annunciator. Such systems are commonly used in modern homes and are very well worth their cost of installation.

82. STARTING A BUSINESS OF YOUR OWN

To start a business of your own or side line jobs for extra money in bell and signal wiring, as mentioned before, very little capital or material is required.

Many men have started big businesses with only a few pounds of annunciator wire, a box of staples, a few push button switches, and a couple of bells and buzzers, along with a few tools, such as pliers, knife, screw driver, hammer, brace and bit, keyhole saw, star drill for brick walls, etc.

You may not even need to buy any materials, and only a few tools, until you get your first jobs lined up.

A little salesmanship will often convince the owner of a home, shop, or store that a door bell or signal system would be a great improvement and convenience, and well worth the very small expense, or that a burglar alarm system would be excellent protection for their property, or perhaps fire alarms from shops, garages, barns, etc., to the houses.

Both practice in salesmanship, and electrical practice are extremely valuable to every beginner.

83. GOOD WORKMANSHIP IMPORTANT

In every job you do, from the smallest door bell system to the most elaborate burglar or fire alarm system, make a practice of doing nothing but first class work—work that will be a credit to your profession, your school, and yourself.

Whether working for a customer or an employer, start building your reputation with your first job, and keep this thought in mind on all the rest.

84. ESTIMATING JOB COSTS

Try to do all work at a fair price to the customer, and a fair wage, plus a reasonable profit for yourself.

A good plan on the first job or two, is to do them on a "time and material" basis. After determining the type of system desired and parts and materials needed, let the customer buy them, and then charge for your time on installing them by the hour.

Keep a record of your time, wages, materials, and costs, and these will help you estimate future jobs quite accurately. Then you can buy your own materials, and charge 25 per cent or more for handling them and for overhead or miscellaneous expense; in addition to a good wage for your time, all in the estimate figure.

In many cases, time and money can be saved on alarm installations by arranging the relays, bells, batteries, and reset switch all on one panel or shelf board, in advance at your home or shop. Then when you go to the job, it is only necessary to mount this assembled unit and install the wires and proper switches.

And again let us emphasize the value of doing all work neatly and with good workmanship, both for the appearance of the job, and for its quality and dependability of operation.

A customer is usually better satisfied in the end, to have a first class job done at a fair price, than to have a poor job at a cheap price.

85. VALUE OF ADVERTISING

Don't hesitate to let the people in your neighborhood know of your training and ability. With just a little confidence and real ambition you can do these things you want to. Prove it to them and to yourself, and be proud of your training, and every job well done.

Very often the repair of bell and signal systems already installed, will bring you some extra money.

After completing your entire course you will be able to do repair and installation work, not only on signal and alarm systems, but also on radios, lighting systems, electric motors, appliances, etc.

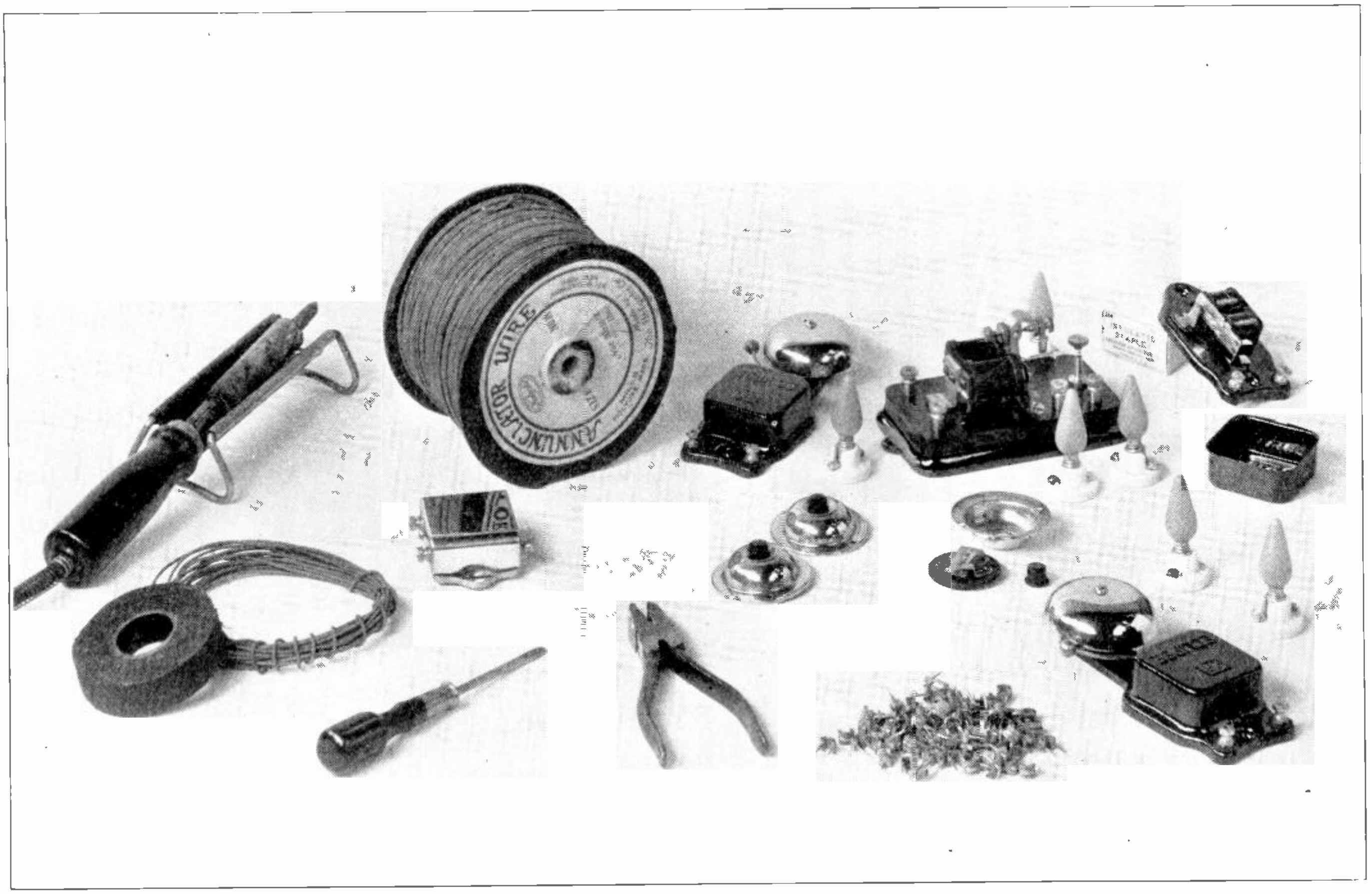

Fig. 107-B This photo shows a view of the more common parts and materials used in signal and alarm wiring.

If you have spare time evenings and week ends, and wish to do such work aside from your regular job, or to make a business and specialty of it, it will usually pay to do a little advertising. An advertisement in your local newspaper, and printed cards left at houses and shops will call attention of people to yourself, as a trained man available to install or service such equipment for them. In many cases this will bring all the work of this kind that you can handle, especially after you have done some work and have a few satisfied customers boosting for you.

Small advertisements and a few hundred cards of the type mentioned can often be gotten out at as low a cost as five to ten dollars.

If you should make a specialty of this line of work, and build up quite an active shop and business, then you can add to your tools and materials to make a more complete equipment for greatest time saving and convenience.

For a more complete list of tools and materials in case you want them later, see the following list.

Remember, however, that you can make a good start in this work with probably no more than one tenth of this amount.

1 2″ screw driver for bell adjustments.
1 4″ screw driver for small screws.
1 6″ screw driver for small screws.
1 ratchet for wood bits.
6 assorted wood bits.
3 long electrician's bits, 24″ to 36″, for long holes through walls and floors, and through mortar joints in brick walls.
1 pair side cutter pliers.
1 pair long nose pliers.
1 pair diagonal pliers.
1 claw hammer.
1 light machine hammer.
1 staple driver.
1 compass saw.
1 hack saw.
1 carpenter's saw.
1 small pipe wrench.
1 small set of socket wrenches.
2 small star drills.
1 Yankee drill.
2 ignition point files, for bell contacts.
20-ft. of steel fish tape.
1 wood chisel.
1 cold chisel.
1 doz. assorted push button switches.
3 to 6 vibrating bells.
3 to 6 vibrating buzzers.
3 drop relays.
3 bell transformers.
12 dry cells, No. 6.
5 lbs. No. 18 annunciator wire.
3 boxes insulated staples.
1 electric or gasoline soldering iron.
3 rolls friction tape.
1 lb. solder.

After getting a start in this work so you are buying considerable of materials and parts, you can get discounts or wholesale prices from your dealer, or by sending to some mail order house, and in this manner make still more profit on your jobs.

Now, whether you choose to follow bell and alarm wiring or not, every bit of the knowledge of these circuits and devices that you have gained in this section will be of great help to you in any line of electrical work, and particularly if you should enter any of the other great fields of a similar nature, such as railway signal, telephone, or radio work.

COYNE
Electrical School
CHICAGO ~ ~ ILLINOIS
ESTABLISHED 1899

ELECTRIC SIGNALLING SYSTEMS

TELEPHONES

Section Three

TELEPHONES

The telephone industry today is one of the greatest branches or fields of electrical work, and is expanding at the rate of several hundred millions of dollars per year.

Tens of thousands of trained electrical men are kept constantly employed in the fascinating work of this field, and its continual rapid development creates new jobs for several thousand more yearly.

The modern telephone is a form of electrical signalling device of the most refined type. It has become one of the greatest factors in our present civilization and is an absolute necessity to modern business.

Important business transactions are carried on over the vast telephone network of this country every minute of the day and night, saving vast amounts of time and making distances seem very small.

Today a farmer can talk to his neighbor a few miles away, or call the nearest town for groceries, machinery repairs, or the doctor—all for a few cents cost.

A resident of any large city can call any individual one of the thousands or millions of people who may live in that town, or in any other town in the country.

In a few minutes a connection can be established from New York to Los Angeles, or from New Orleans to Duluth, and a business or social conversation can be carried on for a few dollars.

We can also talk to people across the ocean, through undersea cables, or by means of the combination telephone and radio connections now in common use.

86. GREAT FIELD FOR SPECIALISTS WITH ELECTRICAL TRAINING

To keep all this vast and marvelous system of telephones functioning perfectly requires thousands of well trained electrical men who are specialists in circuit tracing, trouble shooting, and care and adjustment of the relays and parts of these devices. Many more men are required to install the thousands of new telephones constantly being added to this vast system.

87. TELEPHONE KNOWLEDGE VALUABLE IN ANY LINE OF ELECTRICAL WORK

The telephone field is one in which you can use every principle that has been covered so far in this signal section, and in the sections which follow there will be much information applying to telephones in particular. And even though you may never specialize in or follow telephone work, you should at least have an understanding of the fundamental principles of telephone equipment. Many power plants, factories, shops and offices have their own private telephone systems, and in any line of electrical maintenance work you are likely to find good use for this knowledge.

88. PRINCIPLES OF OPERATION

The telephone is a device to transmit sounds and voice from one point to another. Telephones do not actually carry the sound itself, but instead reproduce it by means of electric current impulses.

In order to understand how this is done, we should first know something of the nature of sound. Most everyone knows that any sound is transmitted by means of waves in the air. These air waves may be set up by one's voice, clapping of hands, firing a gun, or anything that causes a disturbance of the air.

Different sounds have waves of different volume and frequency. A loud sound has waves of greater volume or energy, and a low or feeble sound has waves of less volume or energy. A high pitched sound has waves of high frequency, and a low note has waves of lower frequency.

These little puffs or waves of air strike our ear drums and cause them to vibrate and transmit impressions of various sounds to our nerves and brain, thus enabling us to hear them. Figs. 108 and 109 show several different forms of sound waves, represented by curves showing their volume and frequency.

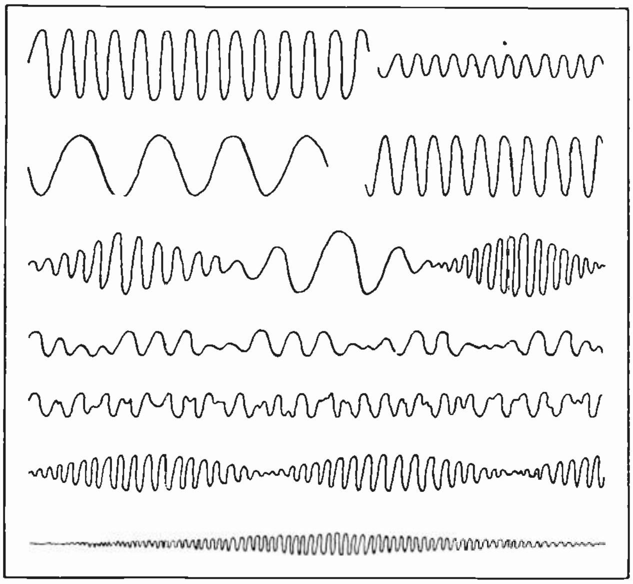

Fig. 108. This sketch shows a number of different forms of sound waves represented by curves. The upper line shows two groups of waves, both of about the same frequency, but the first group of considerably greater volume than the second. The second line shows two groups of about the same volume, but the first is of much lower frequency than the second. The third line shows waves of varying volume and varying frequency.

In order to be heard by the ordinary human ear, sound waves must be between 16 per second and 15,000 per second, in frequency. These are called **Audible** sounds. Many people cannot hear sounds of higher pitch or frequency than 8,000 to 9,000 waves per second, and it is only the highest of musical or whistling notes that reach a frequency of 10,000 or more per second.

Sound waves travel about 1,100 feet per second in air, and abount 4,700 feet per second in water.

Ordinary sounds can only be heard at distances from a few feet to a few hundred feet, and the loudest sounds only a few miles.

This is because the actual amount of energy in the sound waves is very small and is quickly lost in traveling through air.

Electricity travels at the rate of 186,000 miles per second, and can be transmitted over hundreds of miles of wire without much loss. So if we change sound wave energy into electrical impulses and then use these impulses to reproduce the sounds at a distance, we can greatly increase both the speed and the distance sounds can be transmitted.

This is exactly what the telephone does.

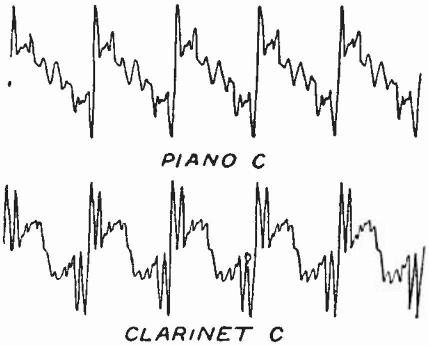

Fig. 109. These waves are typical of various musical notes, having the small variations in frequency and volume occurring at regular intervals, forming groups or large variations in the general note.

89. TRANSMITTING AND REPRODUCING SOUND WAVES ELECTRICALLY

In Fig. 110-A is shown a sketch of a simple form of telephone. Sound waves striking the **Transmitter** at the left, cause it to vary the amount of current flowing from the battery through the transmitter, and also through the **Receiver** at the right. These varying impulses of current through the receiver magnet vibrate a thin diaphragm or disk and set up new air waves with the same frequency and variations as those which operated the transmitter. Thus the original sound is reproduced quite faithfully.

This illustration of the telephone principle shows that the actual sound does not travel over the wires, but that the wires merely carry the electrical impulses.

Figs. 110-B and 110-C show the same circuit with different amounts of current flowing in each case, as they would be at the time different sound waves strike the transmitter.

This simple telephone would serve to transmit the sound only in one direction, but would not permit return conversation. For two-way conversation we can connect a transmitter and receiver at each end of the line, all in series with a battery, as shown in Fig. 111.

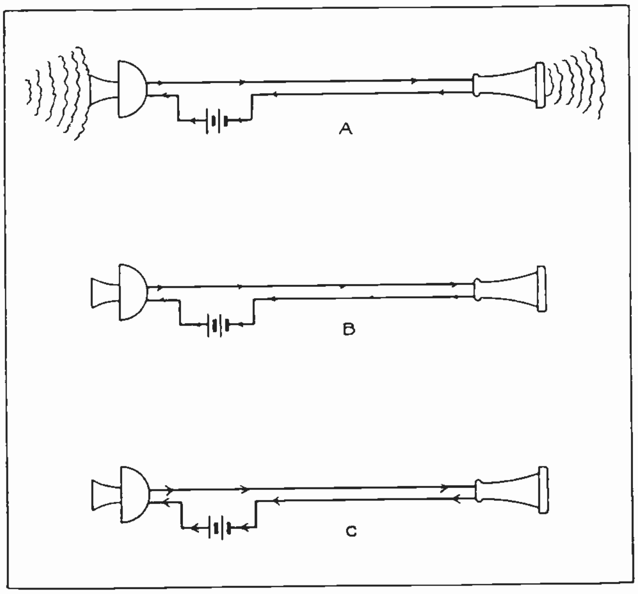

Fig. 110-A. Sound waves striking the transmitter are reproduced electrically by the magnets in the receiver.
B. When feeble waves strike the transmitter only small currents flow in the circuit.
C. When stronger waves strike it heavier currents flow.

With this circuit, when either transmitter is spoken to, both receivers are caused to operate, so this system can be used to carry on conversation both ways.

However, we still do not have any means to call the distant party to the telephone.

This can be arranged very easily, as in Fig. 112, by simply attaching a return call bell and push button system. In this circuit we have made use of one of the talking circuit wires, and a ground path for the bell circuit, but it still requires an extra wire for the signals. This wire can be eliminated by the use of a **Receiver Hook Switch,** to separate the talking and ringing circuits when the receiver is up or down.

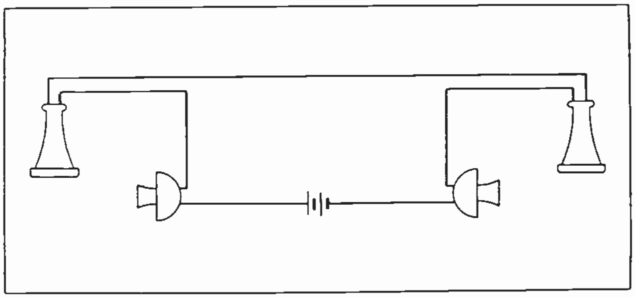

Fig. 111. Two transmitters and two receivers connected in series to form a simple two-way telephone circuit.

The circuit shown in Fig. 112 can be used for a very practical telephone for short distances, such as between a house and barn, or in a large shop or office building. But for longer distances we should also have the hook switch to save the extra wire, and an **Induction Coil** to increase the voltage for the long line. The bells should also be of a special high resistance type, so they will operate on less current and obtain further line economy.

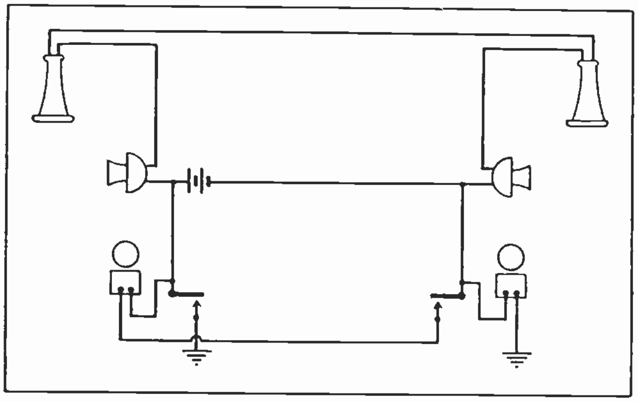

Fig. 112. Simple telephone system for two-way conversations, and including bells and buttons for calling the parties to the telephone.

90. IMPORTANT PARTS AND DEVICES

Now we have found that the more important parts of a telephone are the **Transmitter, Receiver, Bell, Hook Switch, Induction Coil,** and **Battery,** or source of current supply. Some types of telephones also require a special **Magneto** to operate the high resistance bells.

In order to more thoroughly understand the operation of various types of telephones, and also their care and repair, we should now find out more about each of these important parts mentioned.

Although there are many styles of telephones and various circuits and systems, they all use these same fundamental parts, and if you get a good general knowledge of them you will be able to understand almost any telephone installation you may encounter.

91. TRANSMITTER

The transmitter, as was mentioned before, acts as a valve to release from the battery, electric current impulses in synchronism with the sound waves which operate the transmitter. This is done by the use of a variable resistance in the form of carbon granules (particles) in a small cup-like container.

This cup has a loose cover or front end, which is attached to the thin disk or diaphragm directly in front of the mouthpiece.

The mouthpiece acts as a sort of funnel, to concentrate the sound waves on this disk. As the waves strike the disk, they cause it to vibrate slightly and this moves the loose end of the carbon container and compresses and releases the carbon grains or granules. See Fig. 113, which shows these parts in detail.

The transmitter circuit is arranged so the current from the battery must flow through the carbon granules from one end of the cup to the other. When the carbon particles are compressed tightly the contacts between them are better, their electrical resistance is lower, and they allow a strong current to flow. When they are released and their contacts loosened, the resistance increases and less current can flow.

So, as the various sounds strike the transmitter and cause the disk and button to vibrate rapidly, it controls or liberates from the battery corresponding impulses of current. Fig. 114 is a sketch showing the connections and electrical circuit through a transmitter.

Fig. 115 shows several different forms of electric current represented by curves. The straight lines are base or zero lines, and are considered as points of no current value. When the curve goes above the line it represents positive or current in one direction; and when it goes below it means negative or current in the opposite direction. Fig. 115-A shows a steady or continuous flow of direct

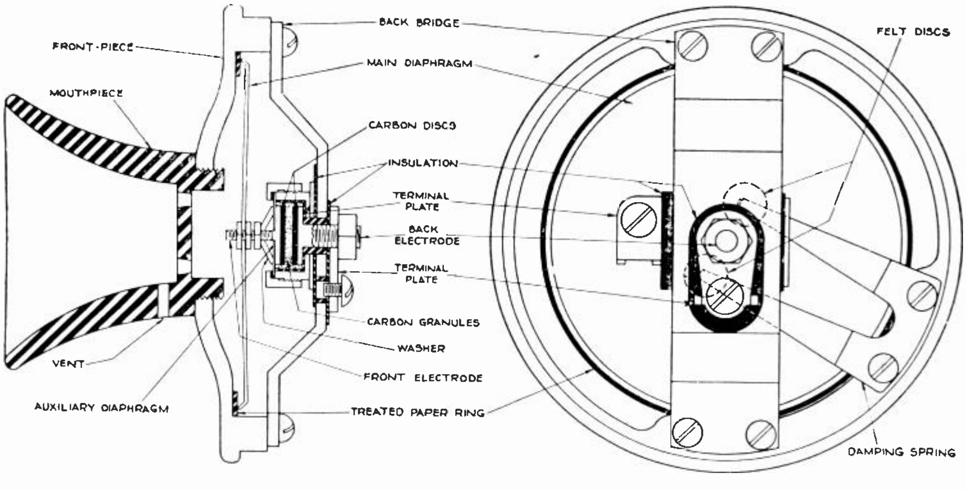

Fig. 113. This diagram shows two different views of a telephone transmitter and its parts. Examine each very closely, and note the names of each part.

current, such as the battery would ordinarily supply. Fig. 115-B shows pulsating direct current such as the transmitter would produce. The height of the curve above the line indicates the value of the various current impulses. While this current varies in amount, it is still flowing all in one direction.

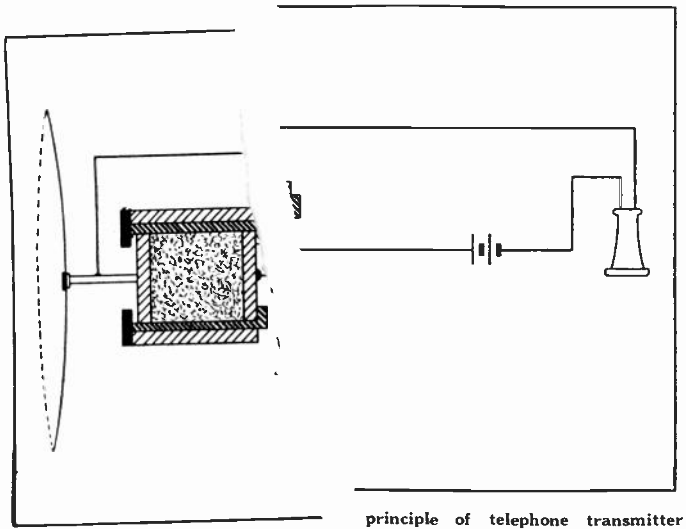

Fig. 114. Simple sketch showing principle of telephone transmitter button, and how the varying pressure on the carbon granules varies the resistance and current flow in the circuit.

Fig. 115-C shows ordinary alternating current, such as a magneto or A. C. generator would produce. This current continually varies in amount and regularly reverses in direction. Fig. 115-D shows alternating current of irregular frequency and varying volume, such as produced by a telephone induction coil, which will be explained a little later.

Fig. 116 shows another type of transmitter of slightly different construction, but similar in operating principle to the one in Fig. 113. This transmitter has the disk or diaphragm mounted in a soft rubber ring, to allow it free movement without rattling or chattering.

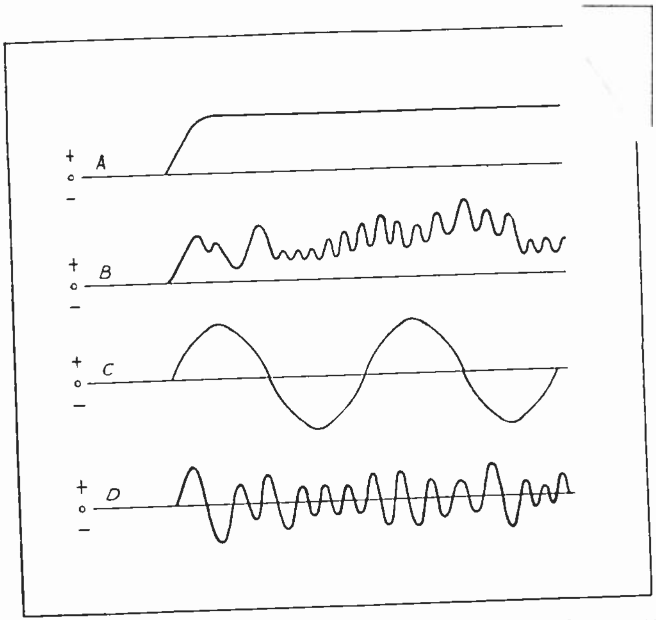

Fig. 115. Various kinds of electrical current represented by curves. Examine each curve very closely and compare with the explanations given.

Sometimes the carbon granules in a transmitter become packed or worn and need to be removed. In many transmitters the entire cup can be easily removed and exchanged. Loose terminals, broken connections, or dirt around the diaphragm also cause occasional trouble.

92. RECEIVER

The ordinary telephone receiver consists of a strong permanent magnet of horseshoe shape, a pair of electro-magnet coils at the ends of the permanent magnet poles, a thin disk or diaphragm, and the shell and cap in which these parts are enclosed.

See Fig. 117. The receiver at the left shows the parts named, while the one at the right shows a slightly different type which does not use the large permanent magnet, but just a strong electro-magnet instead.

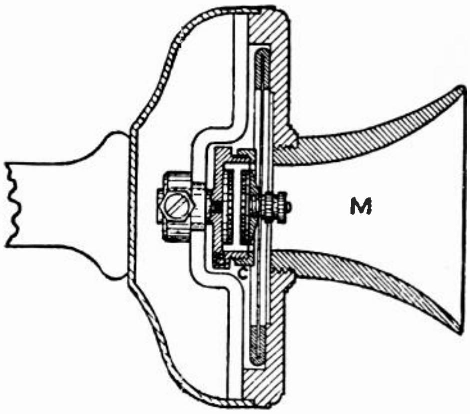

Fig. 116. Sectional view of a common type of telephone transmitter. The carbon cup is here shown empty or without any carbon granules in it.

The permanent magnet normally holds the iron disk attracted when the receiver is not in use. When "talking current," or current from the talking circuit, passes through the coils of the electro-magnets, its current variations strengthen and weaken the pull of the permanent magnet on the diaphragm, causing it to vibrate.

Telephones using induction coils have alternating current in the line and receiver circuits. This current reverses rapidly, and the reversals or alternations are of the same corresponding frequency and volume as the sound waves which caused them.

Some of these impulses were shown in Fig. 115-D. As these impulses pass through the receiver coils, they not only vary the magnetic strength of the coils, but also actually reverse their polarity. This causes the electro-magnets to strengthen the polarity and aid the pull of the permanent magnets on the diaphragm while the current flows in one

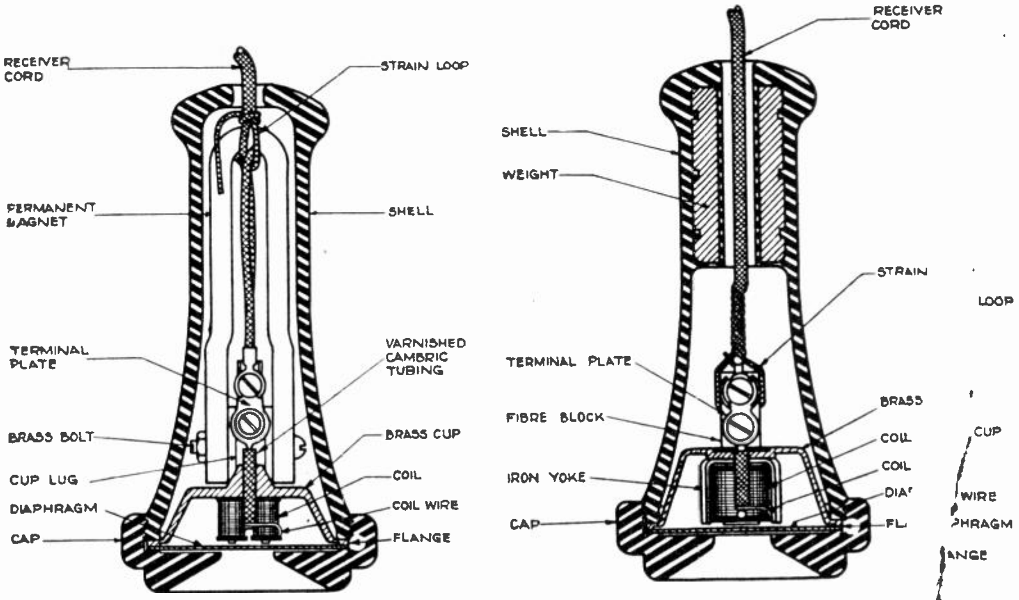

Fig. 117. Two sectional views showing the construction and parts of two types of telephone receivers. Examine all the parts carefully and note the names of each. The receiver on the right has a lead weight at the top of the shell to make it heavy enough to operate the hook switch, which will be explained later.

direction. But when it reverses, the magnetism of the coils opposes that of the permanent magnet and weakens it, thus making a considerable variation in pull on the diaphragm.

The coils of the receiver electro-magnets are usually wound with many turns of very fine wire, and if these coils are bruised or scratched it often breaks one or more turns of the wire and stops the operation of the receiver.

Some of the other more common receiver troubles are as follows: Loose end cap, allowing diaphragm to fall away from magnets; bent diaphragm, weak permanent magnet, loose cord connections, or broken receiver cord. The wires in these cords often become broken inside the insulation, from twisting and kinking, or from rough handling and dropping of receivers.

Testing with a dry cell, first at the cord tips, then at the receiver terminals, and listening for a click at the diaphragm as the circuit is made and broken, will easily disclose this trouble.

Another type of receiver, often called a "watch case" type, is shown in Fig. 118. These small receivers are used in head sets for telephone operators, and are very similar to those used by radio operators.

Their construction is much the same as the larger ones, except that they are much lighter in weight and have the permanent magnet in more of a circular shape.

93. HOOK SWITCH

The receiver is hung on a spring hook when not in use, and this hook operates a switch to disconnect the talking circuit and places the ringing circuit in readiness for the next call. This is called a **Hook Switch.**

By disconnecting the
wasting the battery cur talking circuit, it saves
not in use. It also di rent when the 'phone is
when the 'phone is in sconnects the bell circuit
bell from being rung use, and thus prevents the
Having this switch o g while parties are talking.
it automatic, as the perated by the receiver makes
replaces the recei party naturally removes and
the conversation ver when starting and finishing

Fig. 119 sho
While the re vs a very simple type of hook switch.
and the en ceiver is on the hook it is held down,
center co d of the hook lever presses against the
right ar ntact of the switch, keeping it held to the
closes nd in contact with the spring "C." This
the ringing circuit.

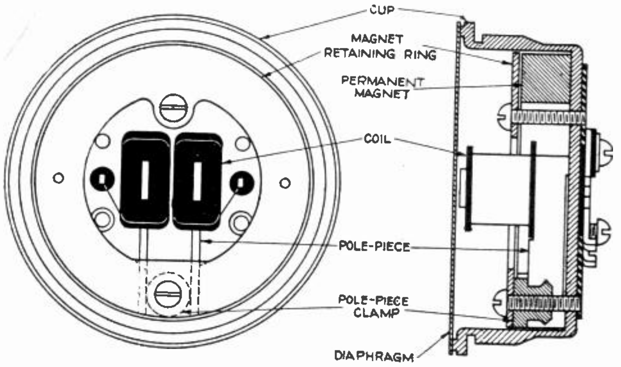

Fig. 118. Sectional view and front view of watch case receiver, such as used on telephone operators' head sets.

When the receiver is removed from the hook, the spring causes the hook to raise and the end of the hook lever to move to the left, allowing the center spring to make contact with "A" and close the talking circuit. It also opens the ringing circuit at the same time.

There are a number of different types of hook switches, but the principle of all of them is very similar and easy to understand.

If the contacts of a hook switch become burned or dirty, or if the contact springs become bent out of shape, it is likely to cause faulty operation of the talking and ringing circuits.

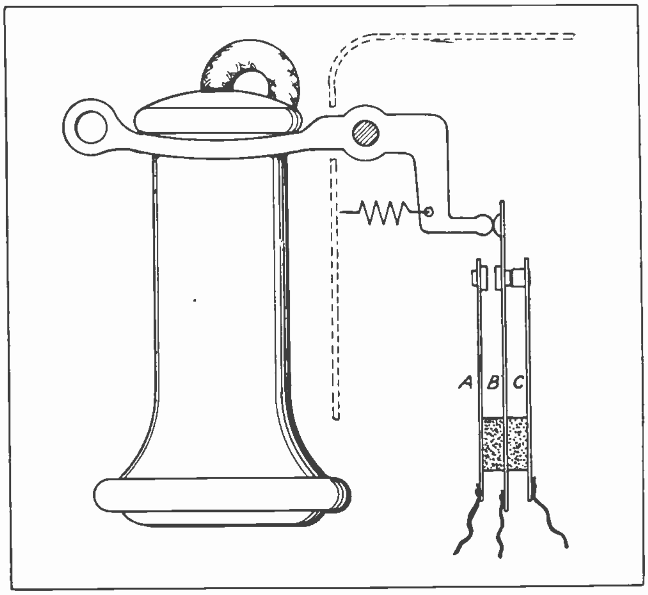

Fig. 119. Sketch showing the principle of a simple "receiver hook switch." Note what the operation of the spring contacts would be if the receiver was raised and lowered.

94. BATTERIES AND CURRENT SUPPLY

Telephones require, for the successful operation of their talking circuits, direct current supply of a very "smooth" or constant voltage value. This is because we do not want any variations in the current, except those made by the transmitter and sound waves.

In small private telephone systems and rural lines, dry cell batteries are often used, and in many cases each 'phone has its own battery.

Large telephone systems for city service use storage batteries or D. C. generators for talking current supply. Generators for this use have special windings and commutators for providing "smooth" D. C., as even the slight sparking and variations of voltage at the commutator of an ordinary power generator would produce a disturbing hum in the 'phone receivers.

Rural line telephones often use a hand-operated magneto to supply current to ring the bells, and some small exchanges do also. However, most exchanges use a generator to produce alternating current or pulsating direct current, for the operators to ring the various parties by merely closing a key switch.

95. INDUCTION COIL

As mentioned before, most telephones that are to be used on lines of any great length use an induction coil. The purpose of this device is to act like a transformer and increase the voltage of the impulses in the talking circuit, so they can be transmitted over long lines with less loss.

When a transformer "steps up" the voltage, it reduces the current in the same proportion, and the less current we have to send through the resistance of any line, the less loss we will have. By briefly recalling your study of Ohms Law and voltage drop principles, this should be quite easily understood.

Induction coils have a primary and secondary winding around a core of soft iron, and when the current impulses are sent through the primary, corresponding impulses of higher voltage are set up in the secondary by magnetic induction. Thus the name, "induction coil."

Fig. 120 shows a sketch of an induction coil. "C" and "C" show the ends of a core which is made of a bundle of soft iron wires. "H" and "H" are ends or "heads" to support the coil on the core. "P" and "P-1" are the terminals of the primary winding. "S" and "S-1" are those of the secondary winding.

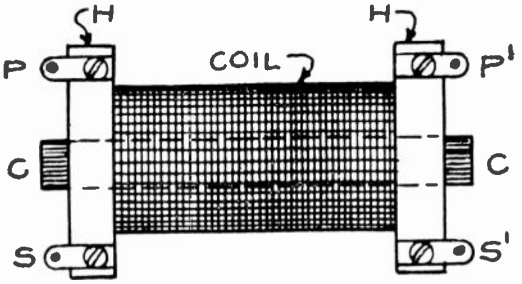

Fig. 120. This sketch shows the construction of the windings and core of a telephone induction coil.

The primary winding should be connected in the transmitter and battery circuit. The secondary winding connects to the receiver and line circuit. These connections will be shown a little later, in a diagram of a complete telephone circuit.

Fig. 121 shows a single, and also a double induction coil. Fig. 122 shows a sketch of the coils, core, and terminals of the induction coil as they are often shown in connection diagrams.

We recall from an earlier section on transformer principles, that transformers will not operate on ordinary direct current, but in the case of this telephone induction coil, the current from the battery is caused to pulsate or increase and decrease rapidly, by the action of the transmitter.

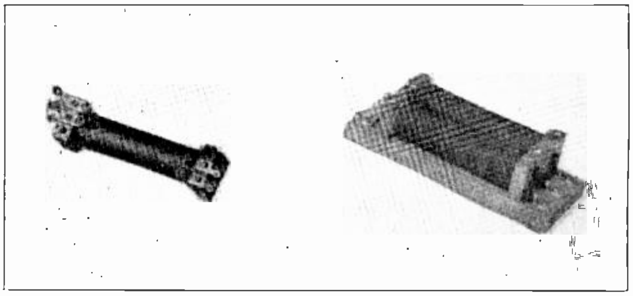

Fig. 121. On the left is shown a single induction coil with the terminal connections plainly visible. On the right is shown a pair of coils mounted on one base.

These variations in the talking current cause the flux of the primary coil to expand and contract, and induce the higher voltage impulses in the secondary.

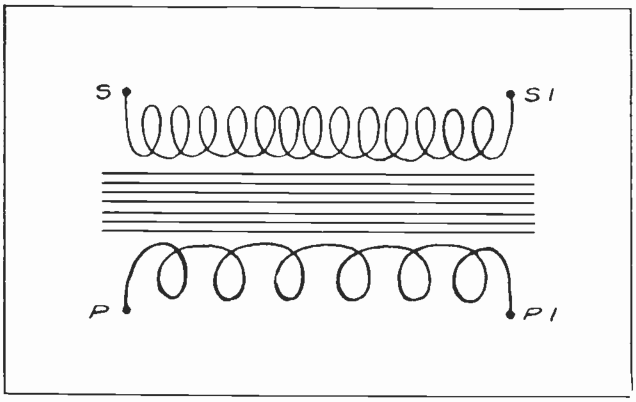

Fig. 122. The primary and secondary windings and core of an induction coil are often shown in the above manner in electrical diagrams.

96. TELEPHONE BELLS

While some telephones in small private systems use ordinary vibrating bells, the more common 'phones in general use in public systems use a **Polarized** bell, which operates on alternating current.

These bells have two electro-magnets and an armature, which is a permanent magnet; and two gongs instead of one, as in the case of the vibrating bell.

Fig. 122-B shows two views of this type of telephone bell.

In some cases, instead of the armature itself being a permanent magnet, a larger permanent magnet is mounted behind the bell coils and with one end close enough to the armature to maintain induced poles in it.

The coils of these bells are usually wound with many turns of very fine wire, and are designed to operate on very small amounts of current at rather high voltage, which makes them economical to operate on long lines.

The operating principle of the polarized bell can be easily understood by referring to Fig. 123. You will note that when current flows through the coils in one direction it sets up poles on the electro-magnets, which attract one end of the armature and repel the other, causing the hammer to strike the left gong as in Fig. 123-A.

Then, if we reverse the current as in "B," this reverses the poles of both electro-magnets, causing them to attract and repel opposite ends of the armature to what they did before. This makes the hammer strike the right-hand gong.

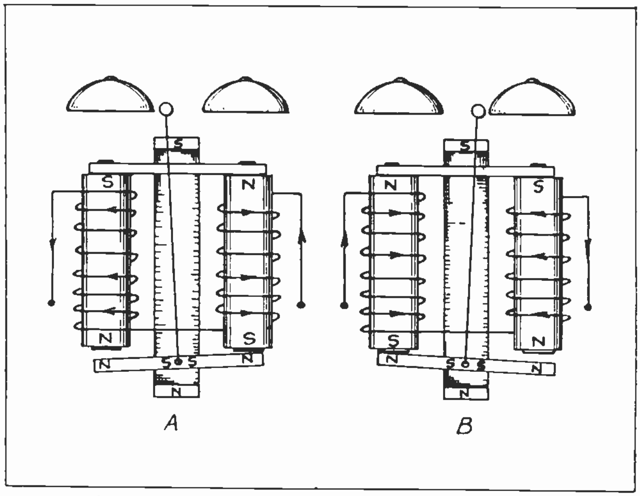

Fig. 123. These sketches show the electrical circuit of a polarized telephone bell. Note the polarity and position of the armature in "A," and again "B," after the current has been reversed.

Then, if we supply alternating current from a magneto or central generator, it will cause the coils to rapidly reverse and operate the hammer at the same frequency as that of the current supply.

Check carefully the polarity of the permanent magnet, the movable armature, and the electro-magnets in both bells in Fig. 123.

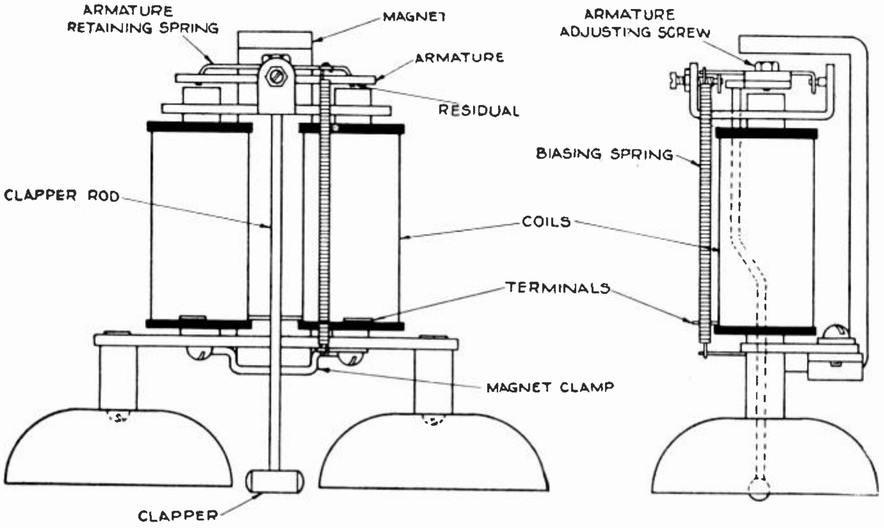

Fig. 122-B. Front and side views of a polarized telephone bell. Note the end of the permanent magnet, which is used to magnetize the armature by induction. Also note the biasing spring attached to one end of the armature.

97. BIASED POLARIZED BELLS FOR PULSATING D. C. OPERATION

Sometimes these polarized bells are equipped with a **Biasing** spring attached to their armature. This spring can be noted in Fig. 122-B. It enables the bell to be operated on pulsating direct current, which is sometimes used by the operators at central stations for ringing various parties on the line.

In such cases a rotary pulsating switch is used in the battery circuit to provide the interruptions in the current. The biasing spring normally holds the hammer against one of the gongs when the bell is idle. When current is sent through the coils in the proper direction, the electro-magnets will attract and repel the proper ends of the armature, to cause the hammer to strike the other gong.

When the current is interrupted, the spring draws the armature and hammer back again, striking the first gong once more. This will be repeated as long as the pulsating current flows. See Fig. 124. The pulsating wheel "W" has alternate sections of metal and insulation, so as it is rotated it rapidly makes and breaks the circuit of the battery and bell.

Fig. 125 shows a very good view of a telephone bell with the gongs removed.

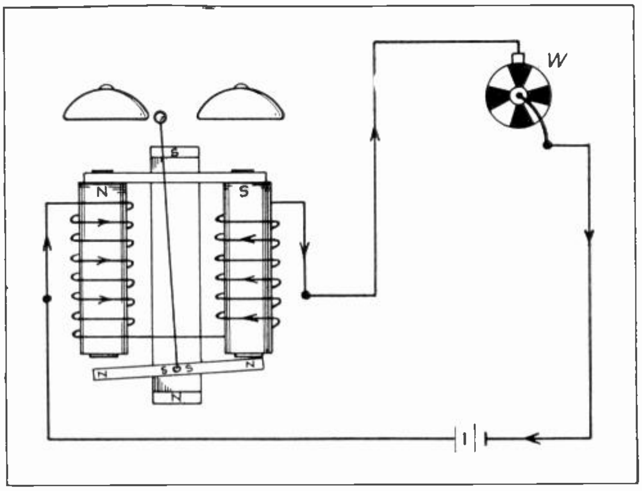

Fig. 124. This sketch shows how a "pulsator" or interruptor can be used to supply pulsating current from a battery and for the operation of telephone bells.

98. POLARIZED BELL WITH PERMANENT MAGNET ARMATURE

Another type of polarized bell used in some telephones, has both coils wound in the same direction and uses the permanent magnet for an armature. See Fig. 126.

In these bells the armature has unlike poles at each end, so in order for one of the electro-magnets to attract and the other to repel, they must have like poles. When alternating current is passed through this bell, the polarity of both electro-magnets changes at the same time. This causes attraction of first one end of the armature, and then the other.

Observe carefully the direction of current and polarities of the magnets in both bells "A" and "B" in this figure.

When telephone bells fail to operate, the trouble can usually be found in a loose connection, broken coil lead, weak permanent magnet, loose gongs, or magnet cores loose on keeper or frame.

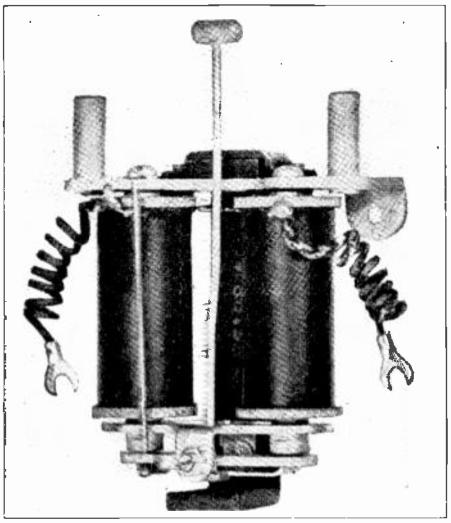

Fig. 125. Photograph of coils, armature, and hammer of a common telephone bell.

99. TELEPHONE MAGNETOS

As mentioned before, rural lines often use magnetos at each 'phone for the subscriber to ring any other party on that line, and also to call the central operator. These magnetos, when operated by the hand crank at normal speed, produce alternating current at fairly high voltage, usually from about 80 to 100 volts, and at a frequency of about 20 cycles.

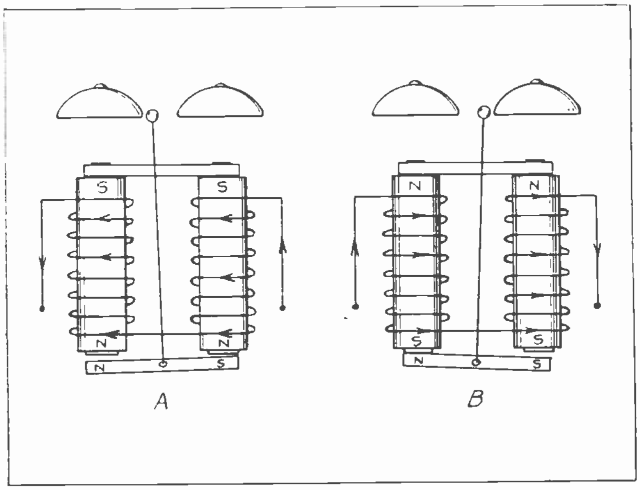

Fig. 126. This sketch shows the construction and windings of another type of polarized bell, which uses a permanent magnet for its armature. Note the polarity and position of armature at "A," and again at "B," after the current has been reversed.

Fig. 127 shows a sketch of a magneto of this type. The armature is usually of the shuttle type with just two large slots, in which are wound many turns of very fine wire. It is located in the base of the magneto between the poles of several large horseshoe magnets.

These supply the magnetic flux which is cut by the armature winding to generate the voltage. The armature is revolved quite rapidly by means of a large gear on the hand crank shaft, and small pinion on the armature shaft.

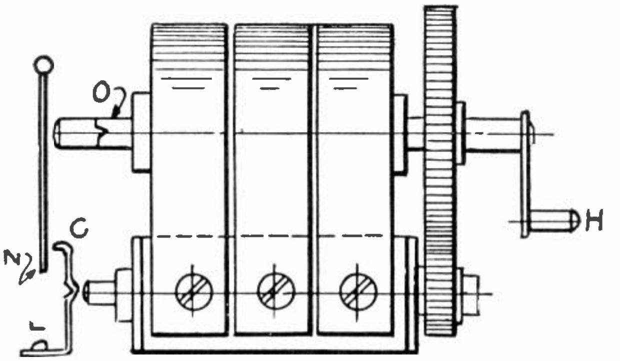

Fig. 127. Diagram of telephone magneto showing shaft extension which operates contact springs.

The crank shaft shown at "O" is equipped with a slotted extension and spring which pushes out against the contact spring "N" each time the crank is turned. This operates a sort of "shunt" switch.

When the magneto is idle this spring falls back, touching contact "C," and shunts out the magneto winding from the line circuit, so the talking current does not have to pass through this resistance.

When the crank is turned the shaft is forced out a small distance and opens these contacts, allowing the magneto current to flow to the line and bells. One end of the armature winding is usually grounded to the shaft, and the other end is insulated and carried out through the center of the shaft, which is hollow. This end or tip of the shaft is in contact with the small spring as the shaft rotates.

Fig. 128 shows two photos of telephone magnetos. The one at the right is equipped with a hand crank for use in a subscriber's telephone. The one at the left is equipped with an extension shaft such as used by central operators in some of the small exchanges.

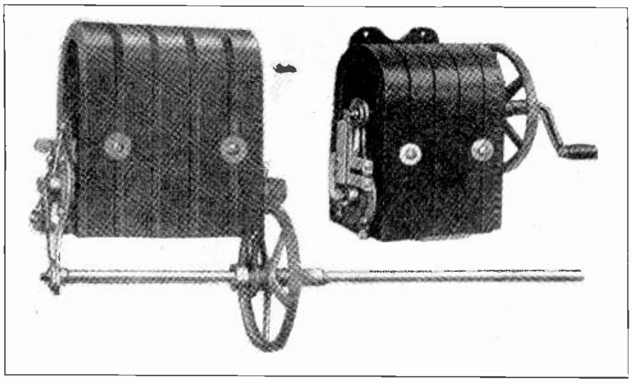

Fig. 128. These photos show two telephone magnetos. The one on the left for use in a small exchange, and the one on the right for a subscriber's telephone.

Some exchanges use a power-driven magneto, having it operated continuously by a small motor. In this case it is only necessary for the operator to close a key or switch to ring the party being called.

In Fig. 128 the spring contacts operated by the magneto shaft are quite clearly shown.

The permanent magnets in these magnetos often become weak after a certain age and need to be remagnetized or replaced. Sometimes a little oil and dirt collects on the contact springs, causing them to fail to make good connections; or they may become bent or worn so they do not make proper contact.

100. COMPLETE TELEPHONES AND CIRCUITS

Now that you understand the function and operation of the important parts of a telephone, let's see how they all work together in the complete 'phone.

Fig. 129 shows a common type of party line telephone used on rural lines and in small towns.

The view on the left shows the box closed, and the location of the receiver, transmitter, and bell gongs. On the right the box is opened up, showing the battery and magneto, hook switch in the upper left corner, and bell magnets on the door. The induction coil is not visible in this view.

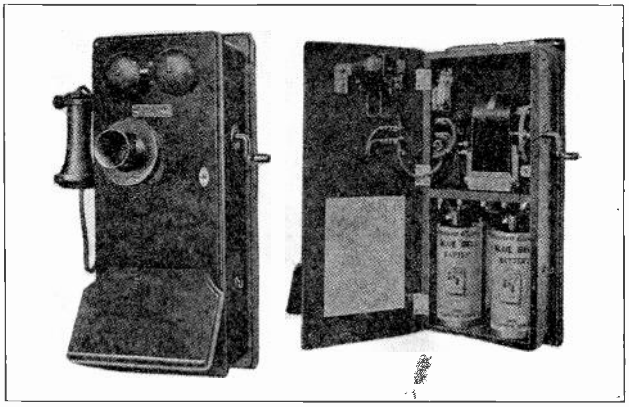

Fig. 129. Common type of party line telephone used on rural lines. This telephone is complete with its own batteries and magneto.

You will note that this 'phone is complete with all necessary parts, and has its own current supply for both the talking and ringing circuits.

Two or more telephones of this type can be connected in parallel on a line, and if desired can be operated without any central exchange or any other equipment.

Any party can ring any other party by a system of different calls, arranged in combination of short and long rings, similar to dots and dashes.

Party lines with a number of these 'phones can also be run to a central office, and from there they can be connected to any other line on the entire system. This is the purpose and function of a central office or telephone exchange. It is practical to have on one line only a certain limited number of 'phones, as otherwise the line would always be busy, and no other subscriber could use it while two parties were already talking over it. On rural lines the number of parties may be from ten to twenty per line. In cities, from two to four or six is more common.

When a subscriber on one line wishes to talk to someone on another line, he or she signals the central operator, who can, by means of switches and plugs, connect the **Calling Line** to the one called and then ring the party desired on the **Called Line.** The equipment and operation of exchanges is covered later.

Fig. 130 shows a complete diagram of the electrical circuit and connections of a telephone of the type shown in Fig. 129. Here we can see the relation of each part to the others and get a clearer idea of how they all operate together.

Trace out this circuit very carefully, until you are sure you clearly understand its entire operation.

The receiver is shown off the hook and the hook is raised, allowing the main contact spring to move to the left and close the two contacts on that side, completing the talking and line circuit. The large arrows show where the current flows from the local battery, through the transmitter, induction coil primary, hook switch contacts, and back to the battery.

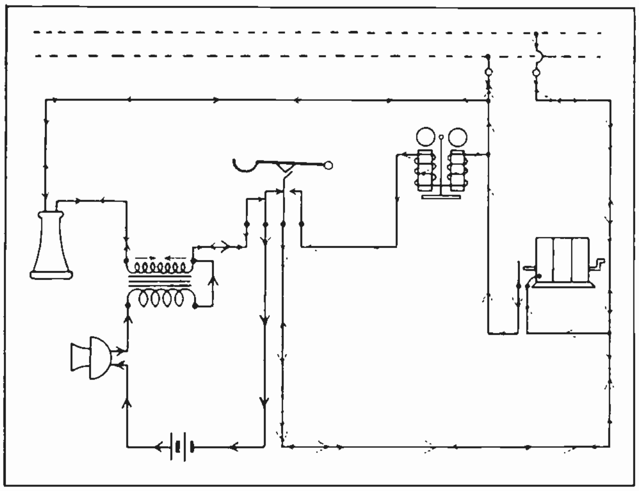

Fig. 130. Diagram showing connections and circuits of a telephone such as shown in Fig. 129.

When the party talks into the transmitter, this local current is caused to pulsate and sets up induced impulses of higher voltage but smaller current, in the secondary coil, receiver and line circuit. This is shown in the small arrows. You will remember that this current induced in the secondary coil and in the receiver circuit is alternating and rapidly reverses, so we show the arrows both ways. It also flows a short distance through one of the same wires with the battery current, but this does no harm.

The magneto is shown here in idle position, so its spring contact is open and keeps the magneto winding out of the ringing and line circuit at present. When the magneto is operated, the shaft pushes out and closes the circuit, and sends current through the bell and also out on the line to the other bells.

In order to ring anyone, the receiver must be on the hook, keeping the hook down and holding the main spring or line contact to the right and in contact with the spring on that side. The ringing current then flows as shown by the dotted arrows.

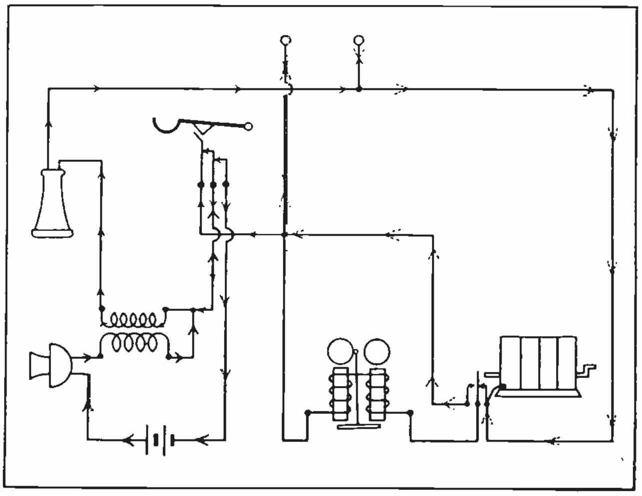

Fig. 131. Circuit diagram of another telephone using a different hook switch and set of magneto contacts. Trace the circuit and observe its operation very carefully.

Fig. 131 shows another telephone circuit, using a hook switch with only three spring contacts instead of four, and a magneto with three contacts instead of one or two. Compare this diagram carefully with Fig. 130. Here again the large arrows show the transmitter and local battery circuit; the small arrows, the receiver and line circuit; and the dotted arrows, the ringing circuit.

You will note that this hook switch does not make and break the ringing circuit as the one in Fig. 130 did. Here the ringing circuit is controlled by the magneto springs. When the magneto is idle, the long center spring presses to the right, keeping the bell connected to the line, ready to receive an incoming call. When the magneto crank is turned it forces the shaft outward and pushes the center spring to the left. This short-circuits the bell and makes a connection direct to the line to ring outside bells. In this type of 'phone the subscriber's own bell does not ring when his magneto is operated.

There are a number of different ways to arrange party line telephone circuits, hook switches, magneto contacts, etc.; but if you have a good understanding of these fundamental circuits and the operation and purpose of these important parts, you should have no difficulty understanding any 'phone circuit after tracing out its wiring or diagram.

101. CENTRAL ENERGY SYSTEMS AND 'PHONES

In large city telephone systems a central source of current supply is generally used for both the talking and ringing. In such systems the subscriber's 'phone does not need a battery or magneto.

The hook switch and circuit are so arranged that as soon as the receiver is removed from the hook, it closes a circuit and lights a small lamp on the exchange operator's switchboard.

The operator then plugs her 'phone onto this calling line and closes her key so the caller can give her the number desired. Then, if the called line is not busy, the operator connects the calling line to it and rings the party to be called.

A simple circuit for a telephone of this type is shown in Fig. 132. Keep in mind, when tracing this circuit, that the current supply comes in on the line from the exchange.

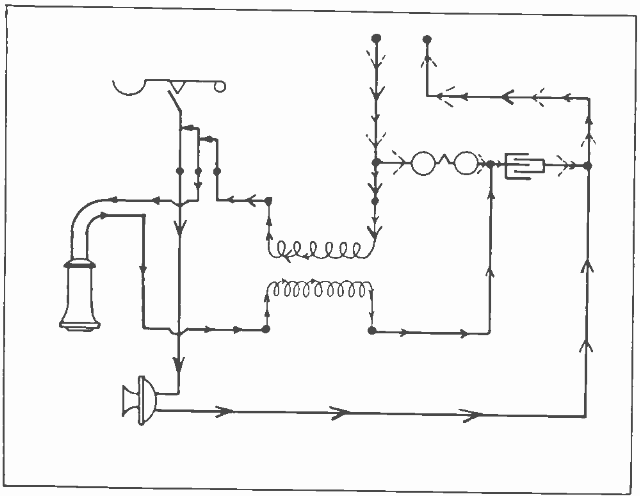

Fig. 132. Wiring diagram for a simple telephone to be used on a central energy system. This telephone gets all the energy from the line and central supply.

You will note that a condenser is used here to prevent the direct current for the transmitter circuit from passing through the bell or receiver circuits.

A condenser will pass or allow alternating current or pulsating direct current to flow through it, but blocks or stops ordinary direct current.

The "talking current," shown by the large arrows, comes in on the left line wire and passes through the induction coil primary, hook switch, transmitter, and back out on the right line wire. When the party is talking, the induced current in the secondary coil, shown by small arrows, flows out through the condenser and right line wire, to the receiver of the operator or called party; and back in the left line wire, through the primary coil, hook switch and subscriber's own receiver, and returns to the secondary coil. In tracing the receiver and line circuit, consider the secondary coil as the source of this energy.

A different symbol is used here for the bell, as it is simpler to draw in plans and easy to recognize once you are acquainted with it.

Fig. 133 shows a complete telephone of this type, for wall mounting. The bell, condenser and coil are mounted in the box, while the receiver is on the usual hook on the side, and the back of the transmitter can be seen in the front of the open cover.

Note the terminal blocks to which all connections are brought and numbered, making it easy to connect up or test the telephone.

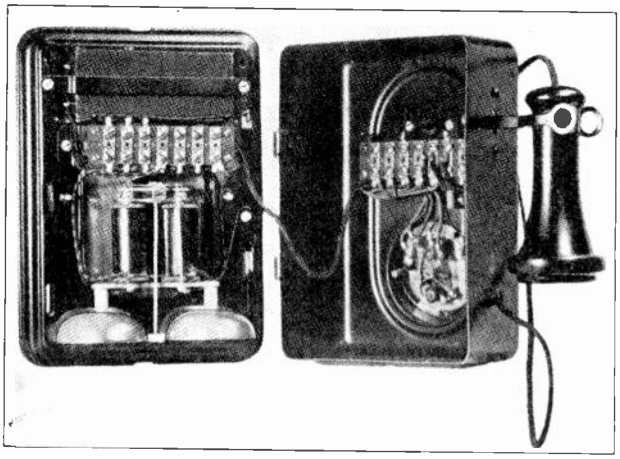

Fig. 133. Photograph of wall type telephone for central energy systems.

Fig. 134 shows another telephone of the central energy type, for use on a desk. This desk-type 'phone has the receiver and transmitter mounted on a separate stand for convenient use on the desk; while the bell, coil, and condenser are in a separate box to go on the side of the desk or under it.

The hook switch is inside the upright handle of the stand.

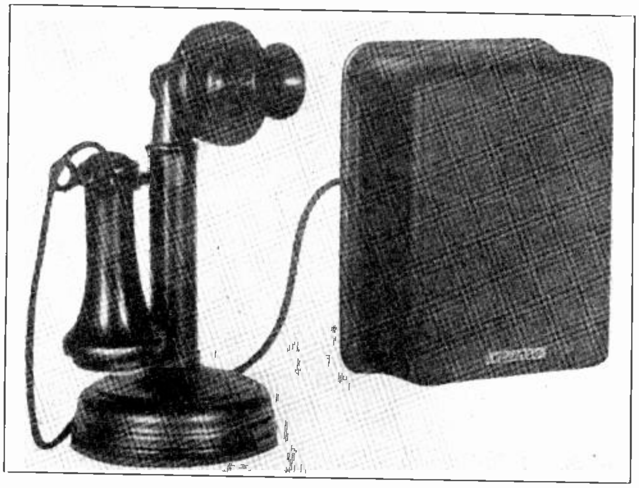

Fig. 134. Common desk type telephone with bell box to be mounted separately.

102. TELEPHONE EXCHANGES

As already mentioned, the telephone exchange serves to connect telephones of one line to those of other lines, and there are thousands of these central exchanges throughout this country, to handle the many millions of telephones in use.

The exchange in the small town handles the calls of the subscribers in the town, those of rural lines calling in to city 'phones, and those of one rural line calling through to another line, perhaps running out of town in the opposite direction. Thus this exchange serves the 'phones in that town and surrounding territory. Then it has its **Trunk Lines** connecting to exchanges of other cities, and can complete a circuit for one of its own subscribers, through the exchange of another town several hundred or even several thousand miles away.

This vast network requires many types of elaborate and complicated exchange circuits, which it is not our purpose to cover here, as they represent a very highly specialized type of work. They also require much more time than the ordinary electrician cares to spend on such circuits, unless he intends to specialize in telephone work. But, in order to give you a better understanding of the general operation of the exchange in connection with the 'phones we all use daily, and also to give you a good foundation to work from in case you should later specialize in such work, we will cover in the following material some of the fundamental parts and principles of exchanges.

Telephone exchanges are of two general types, namely, manual and automatic.

The general function of either type is to receive a signal from the calling subscriber, and get a connection and ring his party on any other line as quickly as possible.

With the manual exchange, the plugging, switching and ringing operations are performed by human operators, usually girls. With the automatic exchange these operations are performed by electrical and mechanical devices.

103. SWITCHBOARDS FOR MANUAL OPERATION

Fig. 135 shows a manual exchange or switchboard, for handling one hundred lines. These lines are brought up to **Jacks** on the upright front of the board.

On the flat, desk-like, part of the board is a set of **Plugs**, attached to **Cords** beneath, and also a set of **Key Switches.** Directly above each jack is a **Drop** similar to an annunciator drop.

When a subscriber on any line signals the operator, the little drop window or shutter for his line falls down, showing the operator that someone on that line is calling. There are two plugs in front of that line, one for talking and one for ringing.

The operator lifts the talking plug and inserts it in the line jack opening. Then, by pressing her key in one direction, she can answer the **Calling Party** and receive the number he wishes to call.

If the line of the party desired is not busy, the operator then lifts the other plug in line with the first one, and places it in the jack of the "called" line. Then, by pushing the key in the other direction, she can ring the party desired.

By pushing the key back to the listening position again, the operator can hear the party answer. When he does, she can release the key to vertical or neutral position. The parties then carry on their conversation through the wires in the cords.

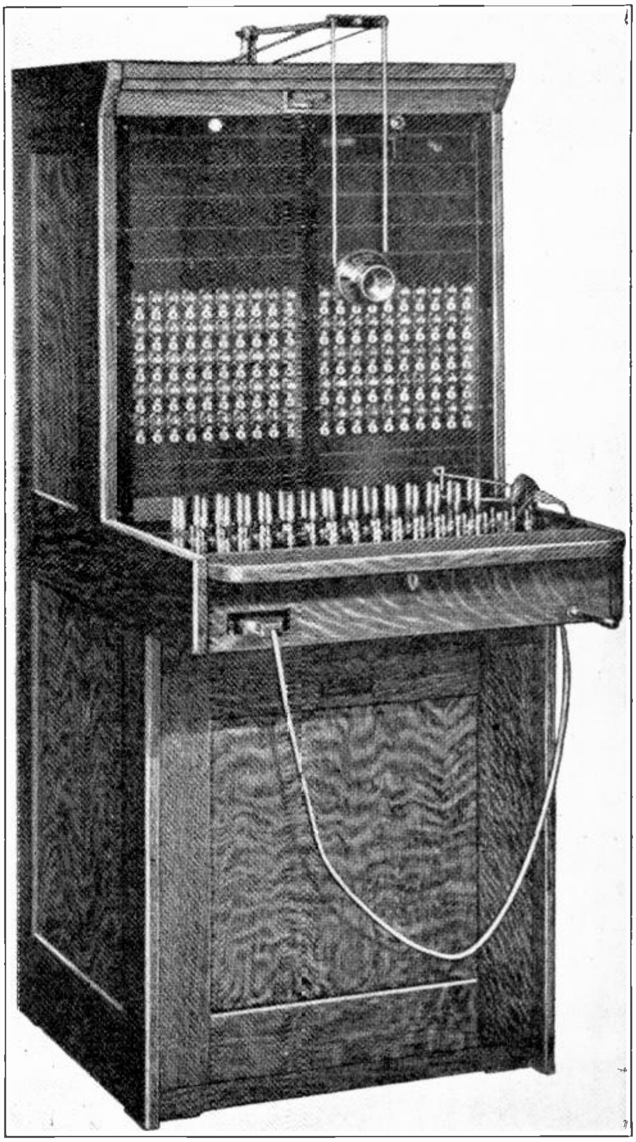

Fig. 135. A small exchange switchboard of the magneto type, showing plugs, jacks, and the operator's transmitter and receiver.

The cords are equipped with very flexible wires, and have weights on little pulleys as shown in the left view in Fig. 136. At the right is shown a large view of the pulley and weight. These weights keep the cords straight and pull them down again each time the plugs are dropped to idle position.

The operator's head-set is shown lying on the keyboard in Fig. 135, and the transmitter is shown on an adjustable arm and cord in front of the board.

Fig. 137 shows a closer view of the keys, plugs, and jacks of a board of this type. The key switches are shown in the foreground, and directly behind these and indicated by the arrow is a row of small lamps to show the condition of the circuit to the operator. Behind the lamps are the plugs, and above are the plug jacks and drops.

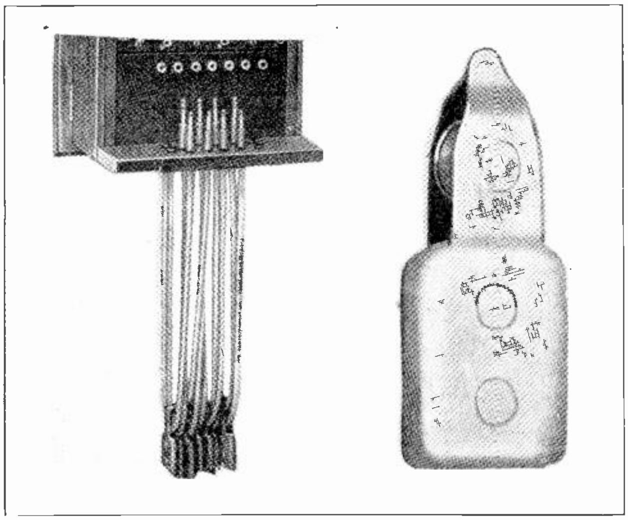

Fig. 136. The view on the left shows the manner in which the plug cords are held straight by the weighted pulleys. A larger view of one of these pulleys is shown on the right.

104. KEY SWITCHES

A very good view of two switchboard keys is shown in Fig. 138. The levers or key handles can be pushed in either direction, and their lower ends have rollers or cams that push and operate a set of spring contacts on either side, depending on which way they are pushed. Examine these switches and all their parts carefully.

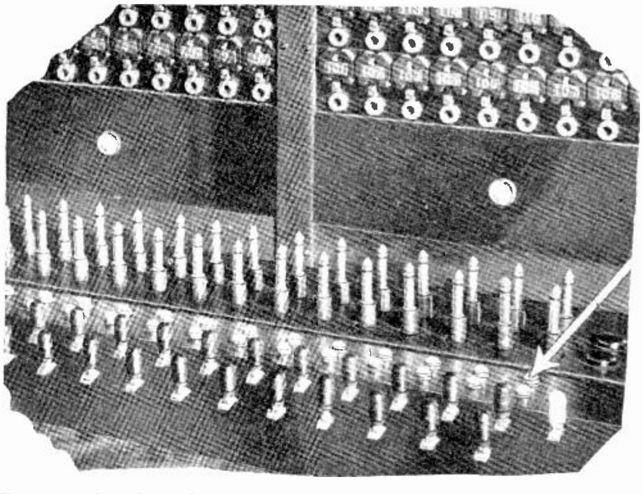

Fig. 137. This photo shows very clearly the arrangement of the operator's key switch, plugs, and jacks.

105. SWITCHBOARD LAMPS

Fig. 139 shows a special type of lamp used for switchboard signals, and also two of the glass caps or "bull's-eyes" that are used over the ends of the lamps.

These lamps are made very small in order to get them in the small spaces on the boards. The actual size is only about one-fourth that of the photo in this figure. The bulb is held in the two metal clips shown on the top and bottom, and these are separated at the base by a piece of hard insulation. The lamps are pushed into their sockets endwise, and these metal strips make the contacts to complete the lamp circuit. The forward end of the lamp is all that shows in the opening they are placed in.

The bull's-eyes are made in white and various other colors to indicate various circuit conditions.

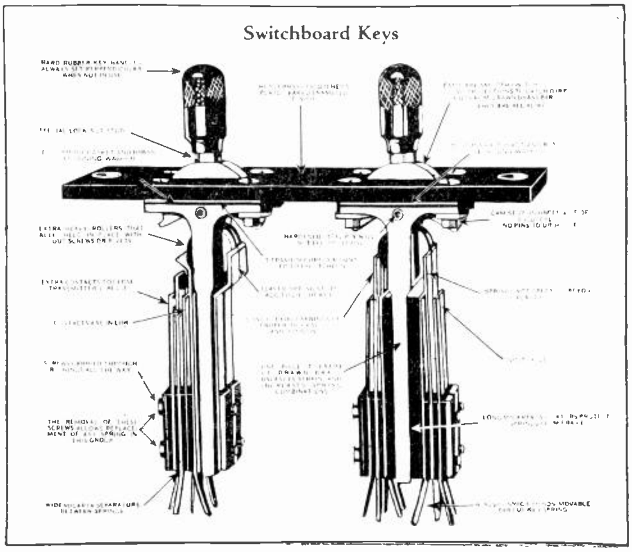

Fig. 138. Here we have an excellent view of two key switches, showing how the key levers and rollers operate the spring contacts, and open and close various circuits.

106. PLUGS

Fig. 140 shows a cord plug. These plugs can be made with two, three, or more separate metal elements for as many separate circuits through them. The plug tip at the extreme right end is part of a small metal rod which runs through the center of the plug to the left end, where the wires are attached. Around this is placed a tube of insulating material. Then another slightly larger, but shorter, metal sleeve is fitted over this. Still another tube of insulation, and a third metal element are often fitted over the first ones, and then an outer shell of insulation over the whole.

The several separate metal elements and ends of the black insulating sleeves can be seen in Fig. 140, which is an actual size view.

When these plugs are inserted in the jacks, the various jack springs make contact separately with each of the plug elements and circuits.

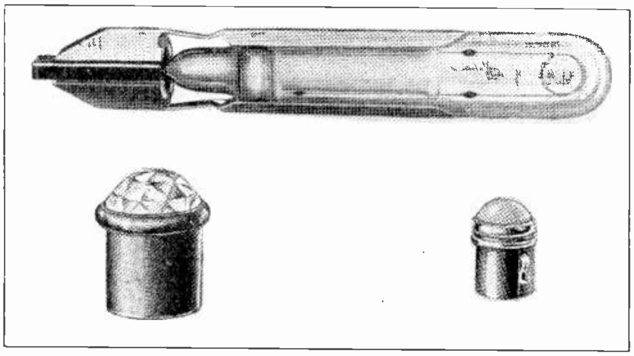

Fig. 139. The upper view shows one of the special telephone switchboard lamps, and below are shown two types of glass caps, or bull's-eyes used with such lamps.

107. JACKS AND DROPS

A complete jack, with the drop and drop magnet mounted above it, is shown in Fig. 141. This view clearly shows the jack thimble, contact springs, wire terminals, drop magnet, armature, and shutter. Examine the photo and printed description very carefully.

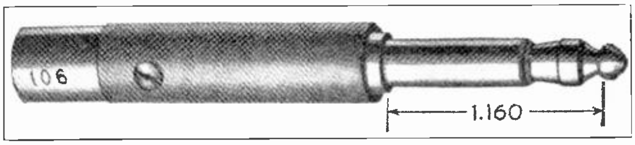

Fig. 140. Full-sized view of a switchboard plug showing how the several circuits are obtained through its tip and insulated sleeves.

Note that the armature to operate the drop is at the left end of the drop magnet, hinged at the top, and attached to a long lever arm which runs over the top of the magnet to the drop latch at the right end. This construction enables a very small movement of the armature to give a greater movement at the drop latch.

The plug would be inserted from the right in the thimble at the lower right-hand corner; and as it goes in, its tip and sleeve elements make contact with the spring shown. It forces some of the springs apart, opening certain circuits, and closes others from the springs to the cord wires.

Fig. 142 shows two diagrams of jack and drop circuits from opposite sides, one without the plug and one with the plug in.

In the upper diagram you will note that springs 3 and 4 are making contact, also springs 5 and 6. Springs 5 and 6 close a circuit from the line through the drop magnet.

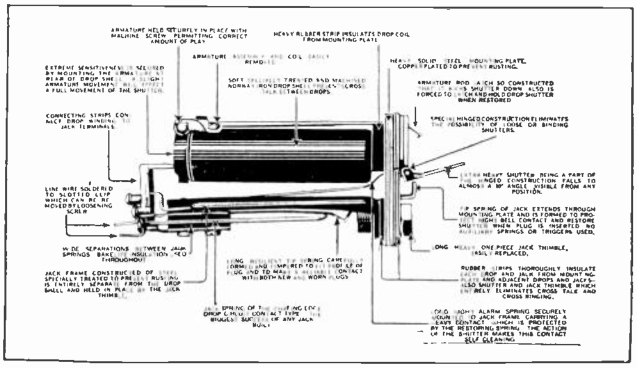

Fig. 141. This descriptive diagram shows the parts of a telephone jack and drop complete. Examine each part and its description very carefully.

In the lower view, showing the plug inserted, we find that springs 5 and 6 have been opened, breaking the circuit through the drop magnet, as it is not needed while the plug is in. Springs 3 and 4 are also opened. This is done by an insulating piece which is not shown here, but fastens 5 and 3 together mechanically, so the upward movement of 5 also forces 3 up. Springs 3 and 4 are not shown connected to any circuit in this illustration.

Referring again to the lower view, we find that the plug has a circuit to its tip and sleeve from spring 5 and thimble 7, thus making a circuit from the line to the cord wires.

108. SIMPLE SWITCHBOARD CONNECTIONS

A sectional view of part of a switchboard is shown in Fig 143. This shows the line connection to a simple jack and drop of the separated type; and also the plug, cord, and switch connections.

When an impulse comes in on the line, the drop magnet releases the shutter, the operator inserts one plug and closes her key to listening position. After receiving the number she inserts the other plug in the jack of the called line (not shown) and pushes key to ringing position, sending current from the board magneto to ring the called party. When this party answers, the talking current from the two lines flows through the jacks, plugs, cords, and key switch. When the conversation is finished, the plugs are pulled and dropped to their present positions in the diagram, the drop reset, and the key restored to normal position.

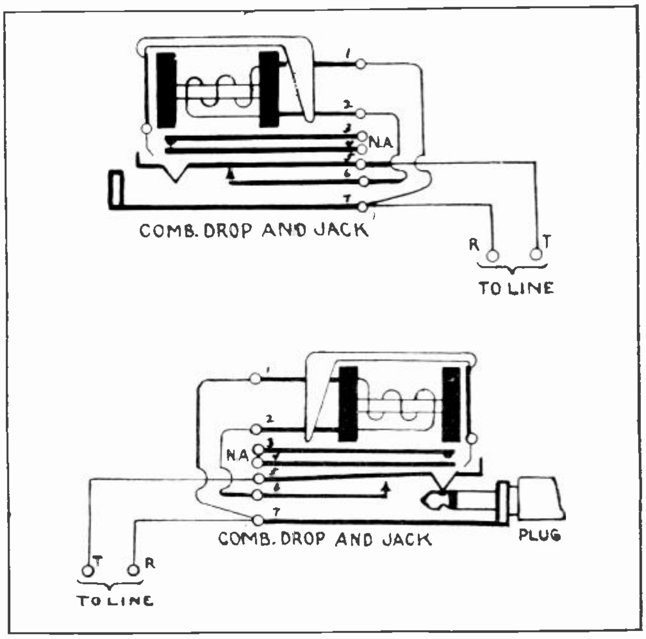

Fig. 142. The upper sketch shows the electrical connections and position of contact springs without the plug inserted. Below are shown the electrical circuit and position of springs with the plug in the jack.

Fig. 144 shows a switchboard with some of the cords in place in the jacks for conversations between various lines.

Many large switchboards use only the signal lamps to indicate an incoming call, and do not use the magnetic drops.

Fig. 145 shows two views of the inside and back of a manual switchboard. In the left view you can see the drop magnets in the upper section, a group of relays in the center, and the induction coils and part of the terminals below. At the extreme right of this view are shown the wires grouped or cabled along the side of the cabinet.

In the right-hand view the relay panel or "gate" is opened, showing the jacks and cords.

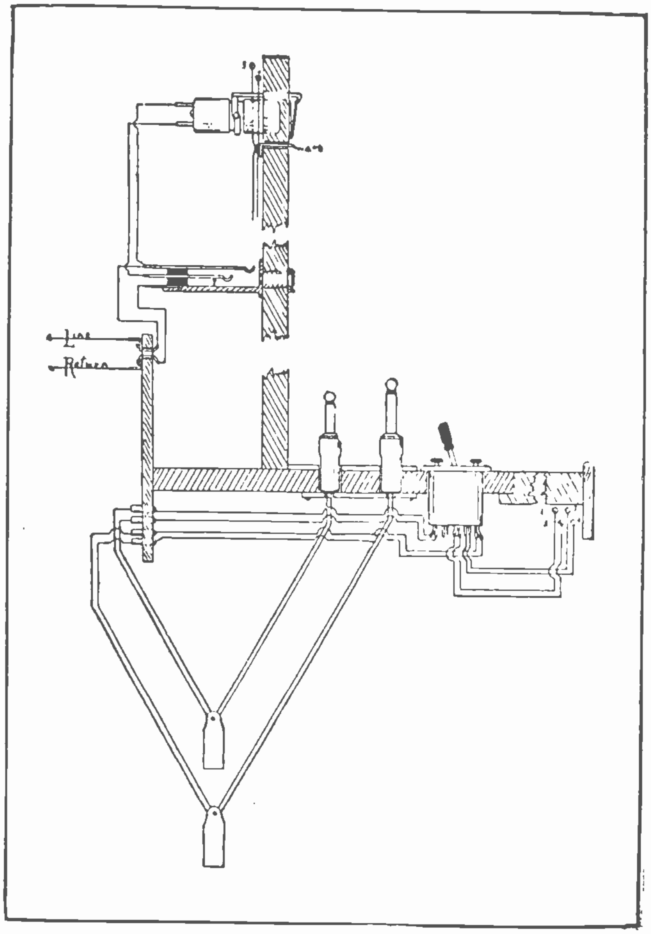

Fig. 143. This simple sketch shows the general operating principle of a manual switchboard.

Fig. 146 shows a small desk type switchboard for mounting on a table or desk in private offices, where an operator is to be able to call various people in the building.

Telephone wiring requires men who are expert in reading plans and making careful and accurate connections of the thousands of wires and devices used on the switchboards.

109. TELEPHONE RELAYS

The top photo in Fig. 147 shows a telephone relay. Its armature is at the right-hand end of the magnet, and is bent and hinged to the corner of the magnet frame. When the magnet attracts the lower end of the armature to the left, its upper horizontal portion moves upward at its left end, pushing the center contact springs upward. This causes them to break circuits with the lower contacts and make circuits with the upper ones. So you see that while these relays are constructed differently and are much smaller and more compact than the pony relays used in alarm and telegraph systems, still their operation and principles are much the same.

110. CABLES AND TERMINALS

The center photo in Fig. 147 shows a piece of lead-covered telephone cable with many paper-covered wires inside it, and covering of extra insulation between them and the lead sheath. Cables of this kind are very necessary to carry the vast numbers of wires in telephone systems.

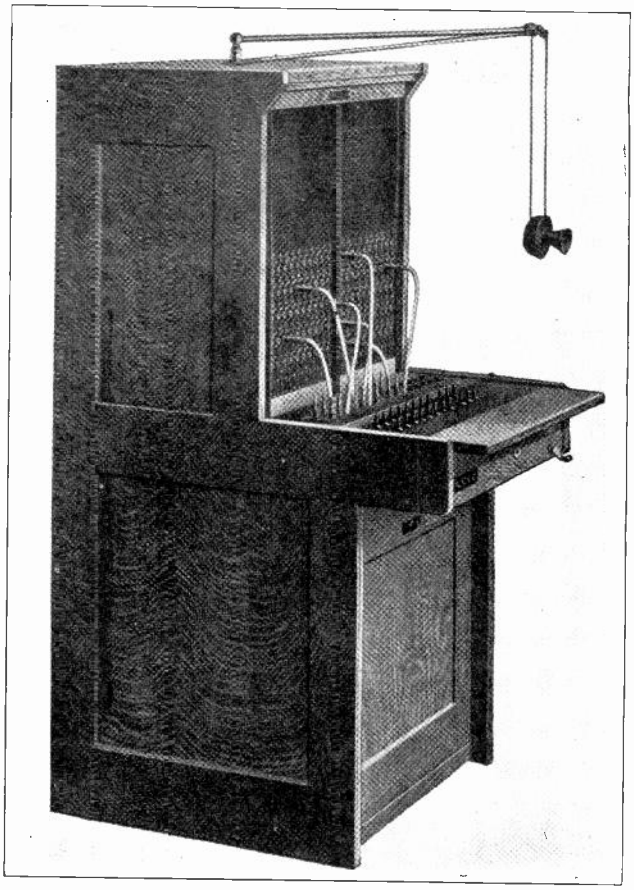

Fig. 144. Side view of a magneto type switchboard with some of the plugs in place in the various line jacks.

The lower view in the same figure shows a terminal block to which a number of wires can be neatly and conveniently connected. The wires from a cable can be soldered to the lower ends of the terminal strips, and the switchboard wires connected to the other ends by means of the small screws shown.

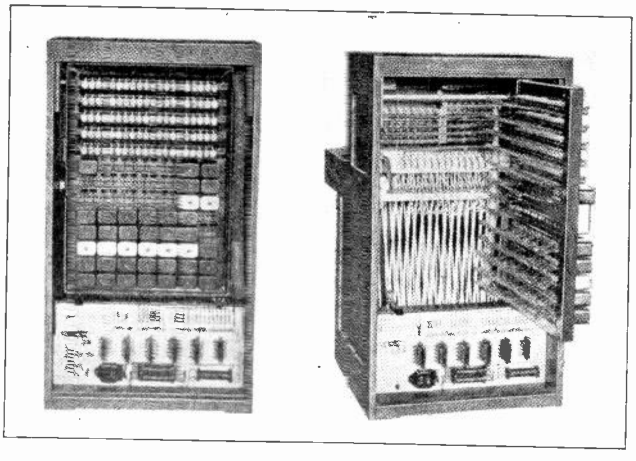

Fig. 145. These two views of the rear of a switchboard show the relays, drops, and cords very clearly. Note the neat and compact arrangement of all parts and wires.

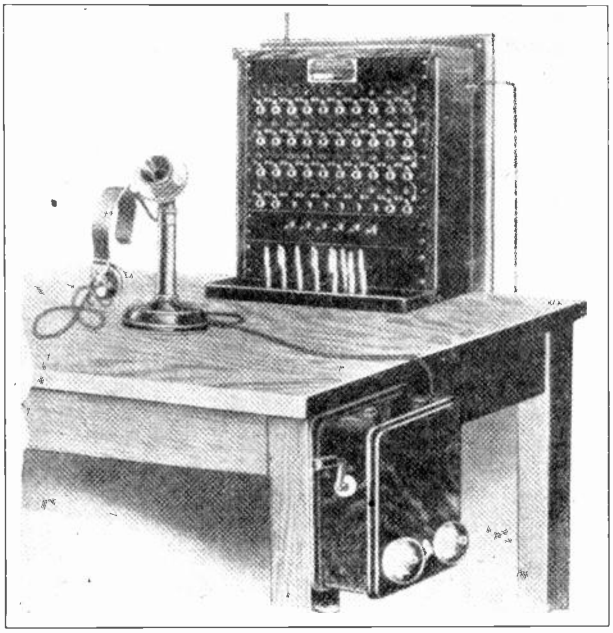

Fig. 146. Small desk type telephone exchange.

These terminal blocks greatly simplify the wiring and testing of telephone and switchboard circuits.

In wiring telephone switchboards, ground connections are also used to simplify much of the wiring. Metal strips and plates are used for common ground connections to the battery negative terminal. This eliminates a number of unnecessary wires.

Some exchanges also use a ground connection to earth for ringing their subscribers.

Fig. 147-D is a complete wiring diagram of a simple manual exchange showing just two subscribers' 'phones connected through the exchange. The different circuits are marked with different kinds of arrows and symbols.

Trace out carefully, one at a time, the transmitter and receiver circuits of the calling subscriber's

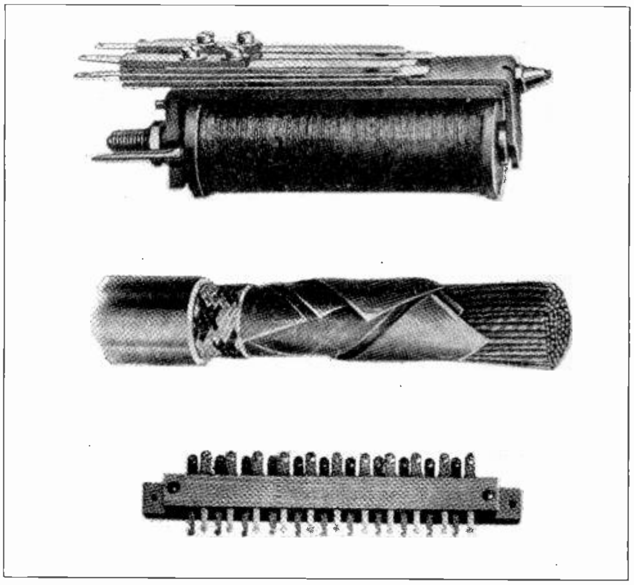

Fig. 147. The upper view shows a telephone relay. In the center is shown a section of telephone cable. Below is a group of terminal springs in a terminal block.

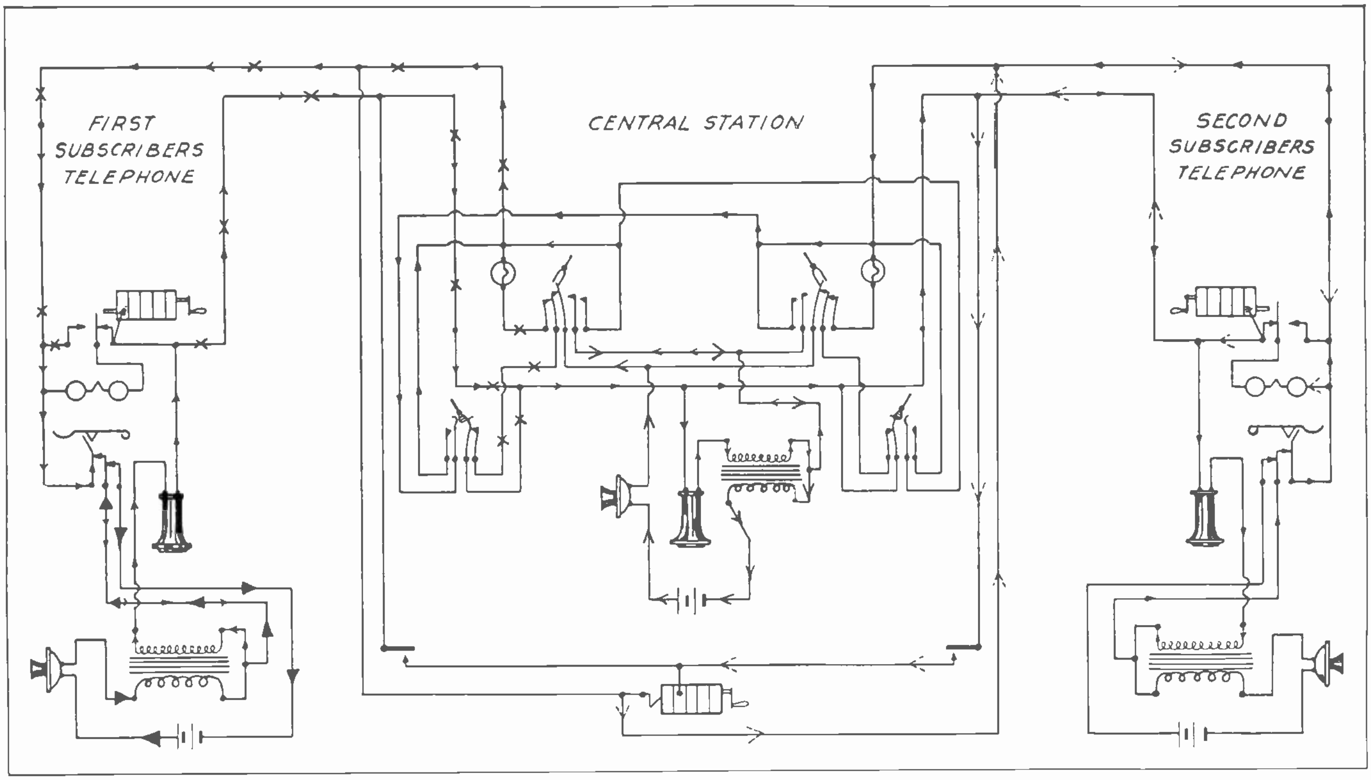

Fig. 147-D. Complete diagram of a simple telephone exchange with two subscribers' telephones connected. This will enable you to trace the talking and ringing circuits which are marked with different forms of arrows and symbols. Carefully tracing this diagram will help you to understand telephone exchange principles more fully.

'phone at the left, and through the exchange to the called subscriber's 'phone at the right. Also trace the operator's magneto and calling circuit to the called 'phone; and the operator's talking circuit. Note the positions the various keys must be in to get the different circuits closed, and in order to trace some of the circuits it will be necessary for you to imagine certain switches are closed to the opposite positions.

There are many other types of exchange circuits, and this simple one shown here is more typical of an army field telephone exchange, but is chosen because of its simplicity and just to give you a good idea of their general nature.

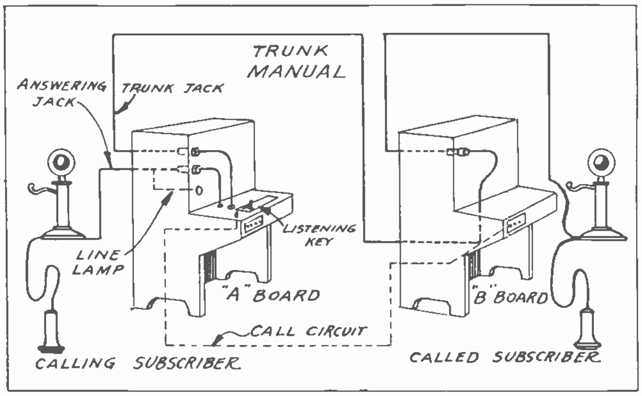

Fig. 147-E. Simple "one-line" diagram showing a telephone circuit through two exchanges and a trunk line.

Fig. 147-E is a simplified diagram showing how a call from one subscriber is routed through his local exchange over a trunk line to the distant exchange, and from there to the called subscriber.

This sketch is what is known as a one-line diagram, using only one line to trace the pairs of line wires actually used.

Fig. 147-F shows a photo of a large manual exchange switchboard in operation, and Fig. 147-G shows the rear of such board. Note the very neat and systematic arrangement of all parts and wires, which greatly simplifies the wiring and testing of such switchboards.

Fig. 147-F. This photograph shows a section of a large manual telephone exchange. Each operator controls a section of the board with its respective plugs and jacks.

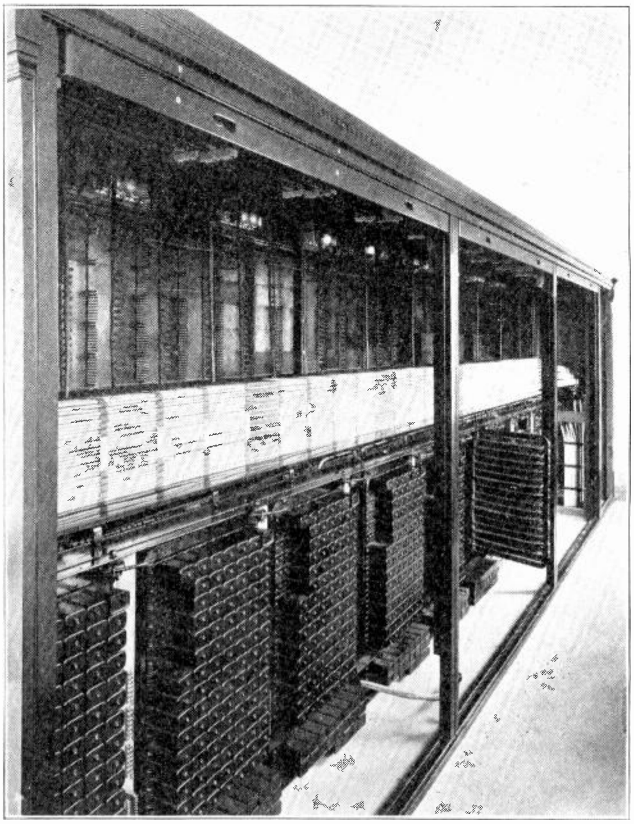

Fig. 147-G. Rear view of a central exchange switchboard of the type shown in Fig. 147-F. Note the very neat and compact manner in which all parts and wires are arranged to simplify connections and testing of such exchange units.

In apartment houses and offices, small telephone installations called inter-communicating systems are often used.

Any party of the group can call any other party by means of proper push buttons. There are separate push buttons and call circuits for each 'phone.

These systems are very useful and practical where the lines are not long and where the system is not large enough to pay to keep an operator.

Fig. 147-H shows the wiring diagram for three such 'phones. Trace out the talking and ringing circuits, and the operation of the system will be clearly understood. A, B, and C are groups of push buttons for calling the different 'phones. The numbers on each button contact indicate which 'phone it will call.

Fig. 147-I shows a photo diagram of five different styles of 'phones which can be obtained for such inter-communicating service.

Fig. 147-J shows two types of inter-communicating 'phones, one with the push buttons on a desk block, and the other having them on its base.

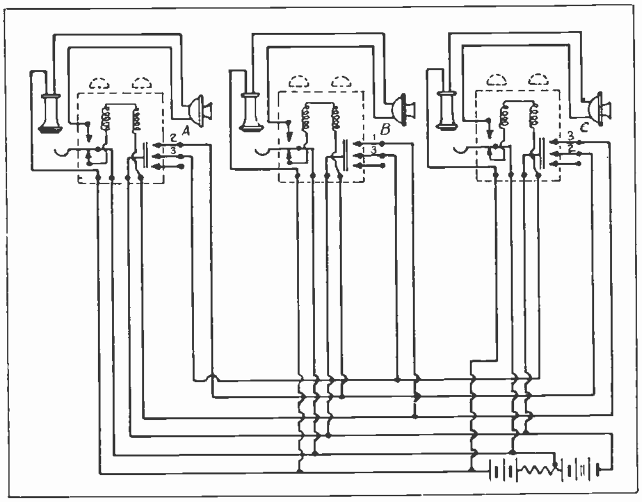

Fig. 147-H. Wiring diagram of three telephones on an inter-communicating system.

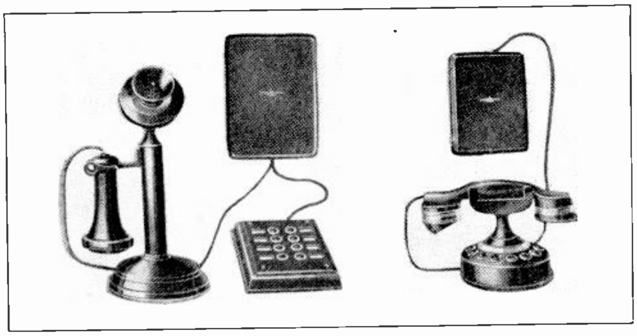

Fig. 147-J. Two types of inter-communicating telephones. The one on the right has the call buttons on the base of its stand.

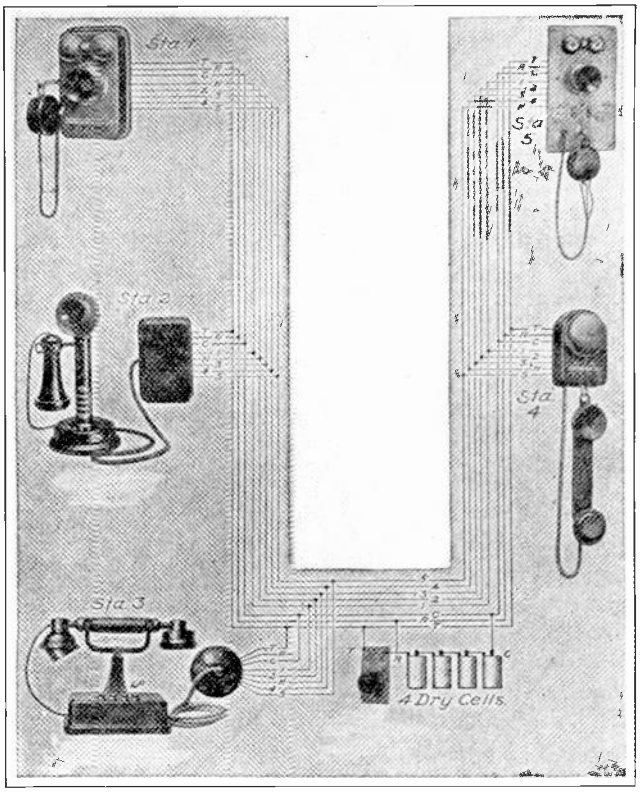

Fig. 147-I. Photo diagram of several types of inter-communicating telephones, showing their connections and batteries, and ringing and talking wires. Such telephone systems are commonly used to communicate with various offices in one building. No exchange or operator is needed, as each party is called by one of a number of push buttons.

AUTOMATIC TELEPHONES

Automatic exchanges do all switching, ringing, and signalling by means of electrical and mechanical devices, and eliminate the human operators. This not only saves the cost of labor of numerous employees, but accomplishes faster and more accurate operation. It provides much more complete privacy for telephone conversations, and, because it is purely electrical and mechanical, it doesn't make the errors caused by possible sleepiness or thoughtlessness of human operators.

The automatic telephone exchange is undoubtedly one of the greatest triumphs of telephone engineering, and they are rapidly replacing many of the largest manual exchanges in this country.

There are several different types of automatic telephone equipment, and most of them are still undergoing rapid changes in the processes of development and perfection. One of the most successful systems is called the "Strowger System", after the name of the man who developed it.

Complete automatic exchange circuits are very complicated, and would require a great deal more time and study than most students would care to spend on the subject, unless they were preparing to specialize in this work. The fundamental principles of this equipment, however, can be quite simply explained.

The following paragraphs are intended to give you a general understanding of them.

110. SIMPLE OPERATING PRINCIPLE

The Strowger System uses what is known as the "step by step" equipment. When the subscriber wishes to call a certain party, he dials the desired number with the dial on his own telephone. This dial in its rotation sends a number of impulses to magnets and relays at the exchange, causing them to move a selector element which picks out the desired line. Other parts of the mechanism then test the line to determine whether it is busy or not, and if it is clear an automatic switch starts ringing the called party.

111. DIALS, CONSTRUCTION, AND OPERATION.

The principle difference between a subscriber's 'phone to be used on an automatic exchange and those for manual systems is the dial. The transmitter, receiver, and other parts remaining fundamentally the same.

Fig. 148 shows an ordinary desk telephone, equipped with a dial for automatic operation. You will note that this dial has ten holes or finger openings, around the outer edge of the rotating part.

When this finger plate rests in the normal position, there is a number on a white stationary disk directly under each of these openings. Starting at the one on the right hand side, and reading counterclockwise, these numbers are 1, 2, 3, 4, 5, 6, 7, 8, 9 and 0.

When the subscriber wishes to dial or call party No. 246, he places his finger in the opening over No. 2, and pulls the dial around to the right until his finger strikes the **Stop Hook** shown at the bottom of the dial, and then releases it. He then places his finger in the opening over No. 4, and again pulls the dial around to the right until his finger is stopped by the hook. Once more the dial is released, and allowed to return to normal position. Then No. 6 is dialed in the same manner.

Each time the dial is rotated clockwise it catches and winds a helical spring inside the case, and a pawl secured to the rotating plate slides over the teeth of the ratchet on a combined ratchet and gear wheel. When the finger plate is released the spring causes it to return to normal position, and the pawl in this backward movement engages the ratchet and gear wheel, turning them back with it at a definite speed, a certain exact distance for each number dialed.

Fig. 148. Desk telephone equipped with dial for use on automatic exchange systems.

112. IMPULSE SPRINGS.

The rotating of this main gear drives a smaller gear or pinion at higher speed, and this pinion rotates an **Impulse Cam**, which rapidly opens and closes a set of contacts or **Impulse Springs.** By means of a worm wheel the pinion also rotates a small speed governor, which causes the gear and dial to turn at a definite speed. This, of course, is necessary to make the impulse springs open and close at regular intervals.

Fig. 149 is a sketch showing the various parts we have just mentioned. Examine this sketch closely, and observe how the main gear drives the pinion, impulse cam, and governor. In the lower right hand corner of the sketch another view of the cam and impulse springs is shown. The arrows indicate their position with respect to the other parts. This view of the governor shows quite clearly how it operates.

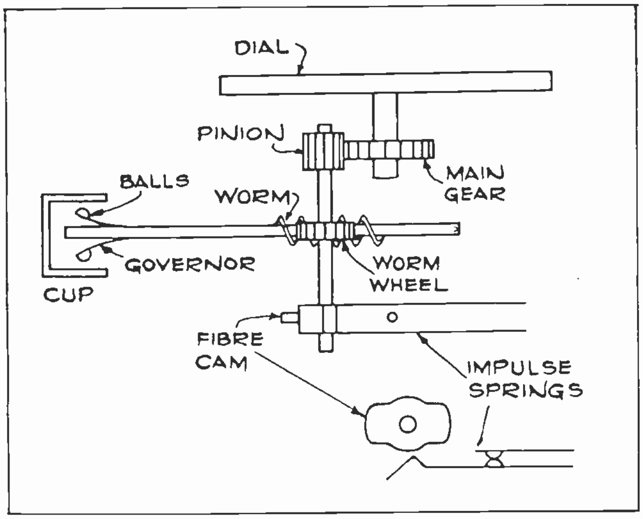

Fig. 149. This sketch shows the mechanism and operating principles of the dial and impulse springs.

If the governor shaft attempts to rotate too fast the small governor balls fly outward on their springs, due to centrifugal force, and rub the inside of the cup, thus retarding the speed of the mechanism.

Fig. 150 shows another view of this same mechanism, in which some parts can be seen a little more clearly than in Fig. 149.

Fig. 151 shows a photo of the complete dial mechanism. In this view you can get an excellent idea of the arrangement of the parts. In addition to the impulse springs at the left of the cam, you will also note an extra set of spring contacts called **"Shunt Springs"**. These are used to temporarily short circuit the other parts of the telephone, during ringing operation. This is necessary because it would be difficult to send the ringing impulses through the resistance of these other parts.

These springs are operated by a small additional cam as soon as the dial is turned from the "off-normal" position. But they are opened as soon as the dial returns to normal. In addition to cutting out the resistance of the other telephone parts, these springs also prevent the clicking that would otherwise occur in the receiver during the operation of the dial.

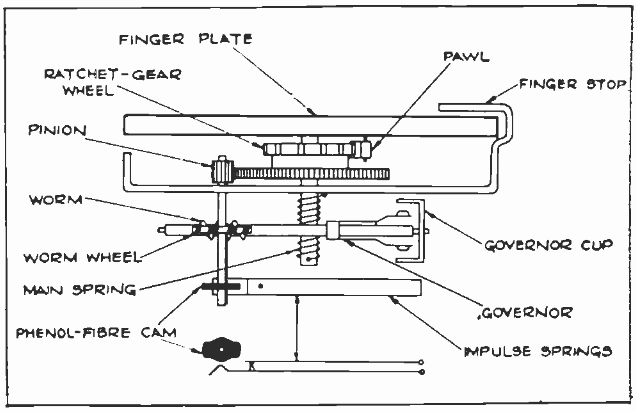

Fig. 150. Another view showing some parts of the dial mechanism more clearly.

The impulse cam revolves one-half revolution for each movement of one number on the dial, and as the cam has two projections it opens the impulse springs twice in each revolution. Thus, when we dial the number 8, the cam makes four revolutions, and opens the spring eight times. The dial is so set with a certain distance from the number 1 to the finger hook, that an extra one-half revolution is made each time any number is dialed. This will be explained later.

Fig. 152 shows a better view of the top of the dial, and its numbers.

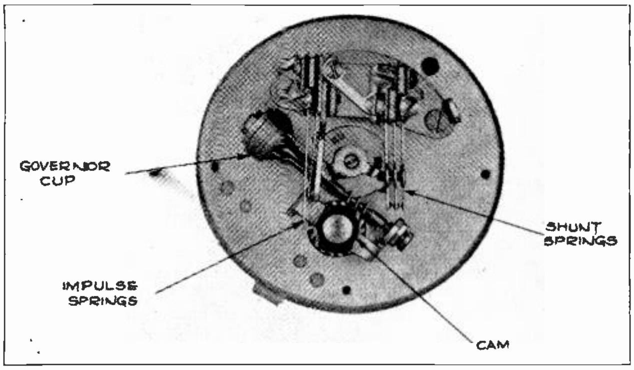

Fig. 151. This photograph shows an excellent view of the impulse springs and cam, shunt springs, and governor of a dial.

113. LINE BANKS AND "WIPER" CONTACTS.

The various groups of impulses, sent into the exchange by dialing different numbers, cause certain relays to energize as each impulse passes through them. These relays and magnets, as before stated, perform the switching and ringing operations.

In order to enable you to understand this equipment and these circuits more easily, let us first examine the arrangement of the various line terminals at the exchange.

For an exchange to handle 100 lines, the terminals of the lines would be arranged in a **Bank of Connectors** as shown in Fig. 153.

Fig. 152. Front view of dial, showing finger plate, holes, numbers and finger stop.

In order to eliminate unnecessary wires and simplify this figure only two telephones, Nos. 14 and 33, are shown connected to the bank at present. At first glance the arrangement of the line numbers in this connector bank may seem peculiar, but suppose some automatic device was to move the **Wipers** of the calling telephone step by step, up into this bank and select a certain line, say No. 14.

One step upward would bring the wipers in line with the lower row of connectors. Then four steps to the right would bring them in contact with No. 14. Dialing the numbers 1 and 4 would have accomplished this.

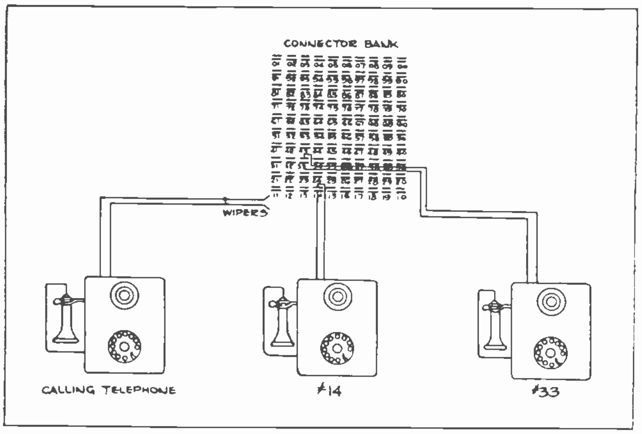

Fig. 153. Simple sketch showing the arrangement and principle of the connector bank of an automatic exchange.

Then suppose we dial the number 33. The first three impulses sent in by the dial would cause the switching magnet to lift the wiper three steps, bringing it in line with the third row of contacts from the bottom. The next three impulses received would cause the wipers to make three steps to the right, and engage line No. 33.

So we find that these numbers are arranged as they are, for convenience and simplicity in the operation of the mechanical selector.

This figure gives us some idea of the arrangement of the various lines and the connector bank at the exchange.

114. WIPER SHAFT AND SELECTOR MECHANISM.

Fig. 154 shows a sketch of the wipers attached to the shaft which raises and rotates them step by step. It also shows the **Vertical Magnets**—V. M., and the **Rotary Magnets**—R. M., which lift and rotate the shaft step by step.

By means of a special relay in the exchange circuit the first impulses which are sent in by the dial come to the lifting magnets, and the next group of impulses are switched to the rotary magnets.

Fig. 155 shows photos of both sides of one of these selector units.

Figs. 154 and 155 should be referred to while tracing out the circuit diagram in 156.

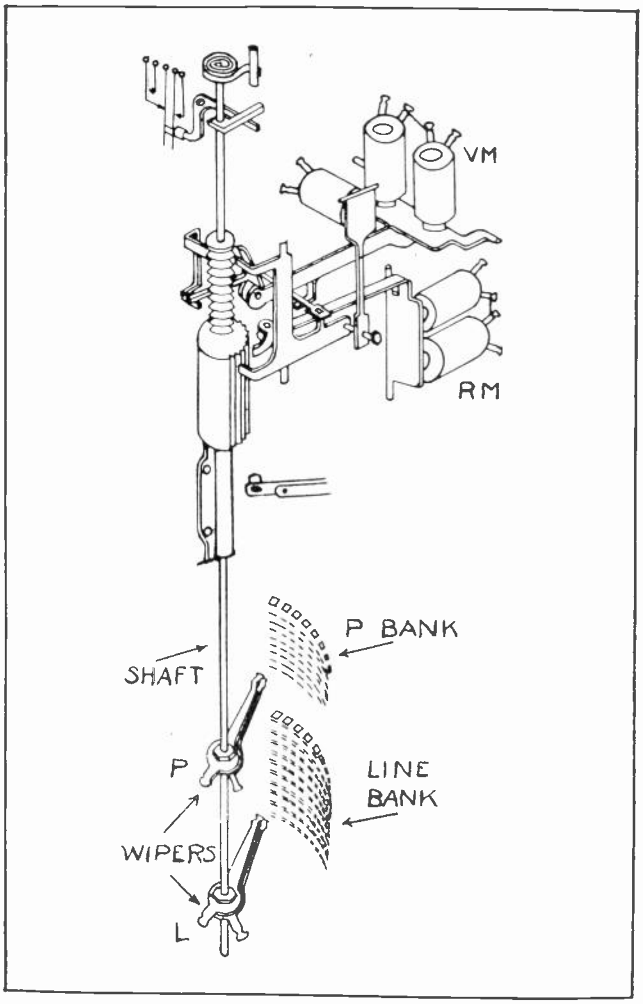

Fig. 154. This diagram shows the arrangement of the selector mechanism with its vertical magnets, rotary magnets, wipers, and wiper shaft.

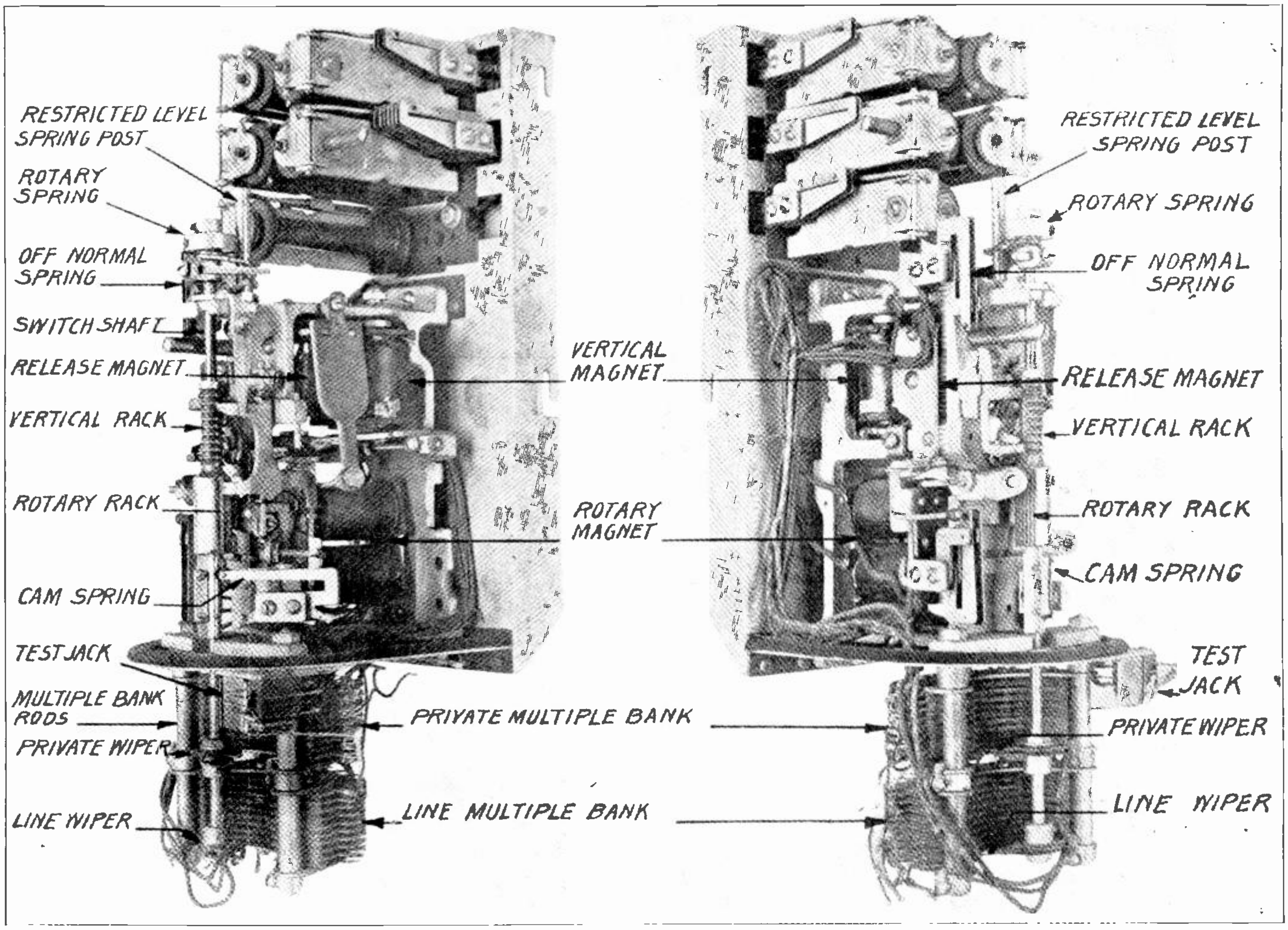

Fig. 155. Two photographs showing front and opposite sides of a complete selector unit. Note the relays above; vertical and rotary magnets, wiper shaft and rack in the center; and the connector banks below.

At the top of each unit in Fig. 155 are the relays which perform different switching operations in the exchange circuit. Underneath these are the vertical magnets or lifting magnets, and below are the rotary magnets.

On the shaft are two sets of notches called the **Vertical Rack** and **Rotary Rack** respectively. These are engaged by the hooks which are operated by the lifting and rotary magnets.

After the selector has completed a connection to a certain line, and the conversation is finished, then, when the subscriber hangs up his receiver, it closes a circuit to the **Release Magnet**, which trips the locking mechanism, allowing the wipers and shaft to return to normal position by the action of a spring and gravity.

115. SIMPLIFIED CIRCUIT OF IMPORTANT PARTS.

In Fig. 156 is shown quite a complete diagram of the more important circuits of the automatic exchange.

It is not at all necessary for every student to trace and understand this diagram at present, but it provides excellent circuit tracing practice, and if you are sufficiently interested in the principles of automatic telephones, or should later decide to prepare to specialize in this field, this simplified circuit should be of great help to you in obtaining an understanding of the most important parts.

In order to trace a circuit of this kind, it is necessary to do it step by step, and very carefully. If this method is followed, it will be found very interesting, and not nearly as difficult as it first appears.

This diagram shows a complete connection between a calling telephone, the automatic exchange, and the called telephone. Each circuit is traced with different types of arrows to make it easier to follow them.

The equipment in the calling phone consists of an ordinary transmitter, receiver, bell, condenser, and switch hook; and in addition to these, the impulse springs, and shunt springs used with the dial telephone.

As soon as the receiver is lifted from the hook, the hook switch will close the circuit, shown by the small solid arrows, from the positive terminal of battery No. 2, through the top winding of relay "L". Then through the shunt switch, impulse

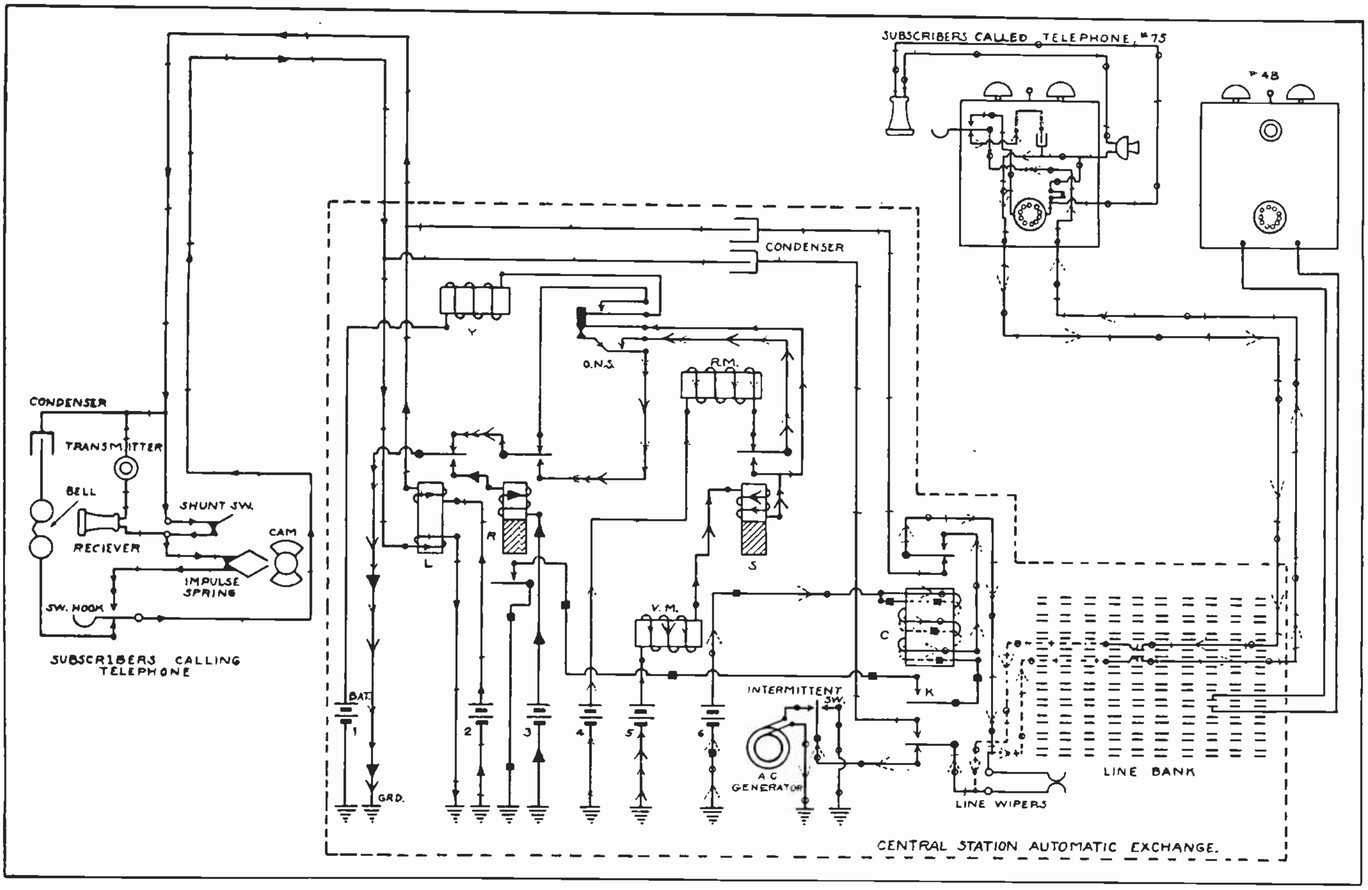

Fig. 156. Complete simplified diagram showing the wiring and operating principle of the fundamental parts of an automatic telephone exchange. Trace this circuit very carefully with the complete instructions given in these pages.

springs, and top contact of the hook switch at caller's 'phone, back through the lower winding of relay "L", and to ground.

You will note that the ground connections in this circuit are returned to negative of the batteries, so when starting to trace a circuit from any battery, as soon as this circuit is completed back to ground, you will know it has returned to negative of the battery.

To simplify this circuit a number of separate batteries are shown.

These current impulses in the circuit we have just traced, will cause relay "L" to become energized and attract its armature. When this armature is pulled down it closes a circuit shown by the large solid arrows from the positive of battery No. 3, through the coil of relay "R", "make" contact of relay "L", and to ground, which completes this circuit.

The term "make contact" is used here, meaning the contacts made when the relay is energized and the armature attracted. The term "break contact" when used, means the contacts that are closed when the relay is de-energized. In other words, the contacts made when the armature is attracted are referred to as "make contacts". Those made when the armature is released are called "break contacts".

When the circuit just traced through relay "R" is completed this relay becomes energized and attracts its armature. So we find that both relays "L" and "R" became energized merely by the subscriber removing his receiver from the hook.

Now, assume that he dials the figure 1. When the dial is released, and as it returns to normal, the cam is rotated one-half turn, and opens the impulse spring once. This momentarily opens the circuit of the line relay "L", which is de-energized for an instant, and its contacts open the circuit of release relay "R".

However, relay "R" remains energized through this short period even though its circuit was momentarily opened. This is because it is a **Slow Acting** relay, and does not release its armature the instant the current is interrupted, but holds it for about a second afterward. This will be explained later.

If the calling subscriber now dials the number 7, opening the impulse springs seven times, the circuit of relay "L" will be broken each time, and allow its armature to release momentarily seven times. Each time it releases, the circuit of relay "R" is broken for an instant, but relay "R" acts too slowly to de-energize and release its armature during these periods, so it remains closed throughout the seven short interruptions of its circuit. But something else did happen.

Keeping in mind that the armature of relay "R" is now attracted to the "make contact", we find that the first time the armature of relay "L" was released it closed a circuit shown by the small open arrows from the positive of battery No. 5 through the vertical magnet, V.M., through relay "S", "break contact" of O.N.S., "make contact" of relay "R", "break contact" of relay "L", and to ground.

The letters "O. N. S." stand for **Off Normal Switch,** which will be explained later.

This circuit we have just traced energizes both the vertical magnet and relay "S". Relay "S", being another slow acting relay, will retain its armature in an attracted position during current interruptions of a fraction of a second.

The second time the armature of relay "L" was released it allowed current to flow, as shown by the large open arrows, from positive of battery No. 5 through vertical magnet and relay "S" again, then through the "make contact" of relay "S," "make contact" of the off normal switch, "make contact" of Relay "R," "break contact" of relay "L," and to ground.

The off normal switch is operated by the line wiper shaft as soon as it moves from off normal position. So as soon as the dialing operation is started, the first movement of this shaft closes certain contacts and circuits, but when the shaft is dropped and allowed to fall back to normal, it again opens these circuits.

Shortly after the last impulse of current has passed through the relay "S" it will de-energize and cannot again become energized, because the circuit has been opened at the off normal springs. Each of the seven impulses passing through the vertical magnet causes it to raise the wiper shaft one step, so the line wiper will now rest in line with the seventh row of line bank contacts.

Now we are ready for the subscriber to dial the second number. Let's assume that he dials No. 5. This again rapidly opens the line circuit five times, causing the line relay "L" to release momentarily the same number of times. Each time relay "L" is de-energized, now since the off normal switch is opened, a circuit can be traced as shown by the small dotted arrows from the positive of battery No. 4, through the rotary magnet R. M., break springs of relay "S," "make contact" of off normal springs, "make contact" of relay "R," "break contact" of relay "L," and to ground.

These impulses in this circuit will cause the rotary magnet to become energized each time and rotate the wiper shaft, carrying the wipers five steps to the right. This brings them in contact with No. 75 of the line bank, as indicated in the diagram.

The dotted lines from the normal position of the line wipers show the upward movement of the shaft caused by the vertical magnet, and the rotating movement to the right caused by the rotary magnet; and they show the circuit which will now be completed to the called subscriber's telephone.

As soon as the line wipers are in contact with No. 75 in the bank a circuit is completed through the bell of the called telephone. This circuit can be traced (backwards) by the large dotted arrows from the top brush of the generator, through **Intermittent Ringing Switch,** "break contacts" of relay "C", lower switch spring and lower contact No. 75 on the bank, "make contact" of hook switch, bell and condenser, then back to the upper contact in the bank and upper wiper spring, on through the top "break contact" of relay "C", low resistance winding of relay "C", through battery No. 6, to ground.

This is a long circuit to trace and should be gone over again until you have it well in mind.

You will note that relay "C" has two windings, one of low resistance and the other a high resistance coil of many more turns. The low resistance coil is to receive a heavy current impulse to first attract the relay armature, then the high resistance locking coil will hold the armature attracted with less current.

The current from the generator is A. C. and will not energize the coil of relay "C." The intermittent switch at the generator keeps making and breaking the circuit at regular intervals, so the called subscriber's bell rings for short, repeated periods and not continuously.

This flow of alternating current through battery No. 6 to ground does no particular harm to the battery. We will remember from an earlier article that the alternating current will pass through the condenser at the bell, but this same condenser will not allow direct current to pass. As soon as the called subscriber lifts his receiver off the hook a flow of direct current from battery No. 6, and traced by the round dots, passes over the same circuit we have just traced to the bell, except that the bell is now cut out by the hook switch, and the transmitter is placed across the line.

Trace this carefully by following the round dots. This flow of direct current will now energize the low resistance winding of relay "C," closing contact "K," which acts quickly before 'any of the other contacts of this relay can move, thus closing a lock circuit in which current flows from the positive of battery No. 6 through the high resistance winding of "C," lower "make contact" of relay "C," "make contact" of relay "R," and to ground. This circuit is traced by the square dots.

With relay "C" fully operated, the talking circuit is now complete through both telephones. This circuit can be traced by the short dashes across the line.

Now, when the calling subscriber hangs up his receiver and breaks the circuit through the line relay "L," it in turn releases and breaks the circuit through relay "R," which, after an instant of delay because of its slow action, releases its upper armature and makes the circuit from battery No. 1 through the release magnet "Y," "make contact" of off normal spring, "break contact" of relay "R," "break contact" of relay "L," and to ground.

This circuit will energize the release magnet "Y," which trips the wiper shaft, allowing it to fall back to normal position. This action interrupts the circuit of release magnet "Y," because the dropping of the wiper shaft opens the "make contact" of the off normal spring.

When relay "R" was de-energized it also opened the high resistance locking circuit of relay "C," allowing its contact to move back to normal position.

Telephone No. 48 merely shows where another telephone of this number would be connected in the back. It is not expected that you will perfectly understand all of this diagram the first time you trace it through, as it is rather complicated and one which requires even an experienced man some time to absorb. But if you are interested enough in this branch of work to trace each step of the operation through this circuit several times it will not only be excellent practice, but will give you a good understanding of the fundamental principle and more important parts of this type of automatic telephone.

There are a number of other auxiliary relays and contacts used with this equipment in larger exchanges where it is necessary to have a number of line banks from which to select.

There is also an added mechanism which automatically tests out any line before completing the calling circuit. If that particular line is busy at that instant, this relay will close a circuit which gives an intermittent buzzing note to the calling subscriber, indicating that the line he desires is busy.

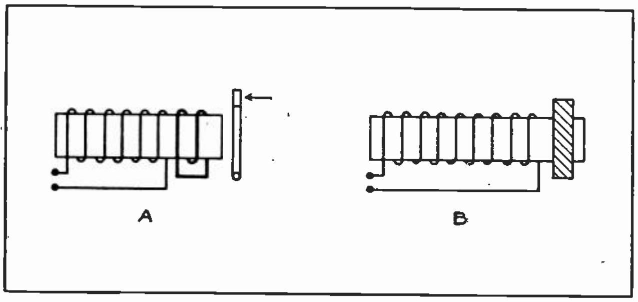

Fig. 157. Two types of slow acting relays. The one on the left has a short-circuited coil of a few turns, and the one on the right has a large copper ring around the end of the core.

116. SLOW ACTING RELAYS

The slow acting relays used with these automatic telephones are very interesting devices. In addition to the regular winding on the core there is also a heavy ring of solid copper placed around the core end. Or, in some cases, just a short-circuited winding of a few turns. This copper sleeve, as it is called, acts as a single turn secondary winding.

When the current is interrupted in the main coil of the relay its collapsing flux induces a rather heavy current in this copper ring. The extremely low resistance of this ring circuit allows the current flow to continue with infinitely small voltage, and as long as there is any flux left from the decreasing current, both in the main coil and in the ring itself.

This persisting flow of current in the ring develops enough magnetism in the core to cause it to retain its armature a little longer. Thus we get the terms "slow acting" relay.

By changing the size of these copper rings, or the number of turns when a shorted coil is used, we can vary the amount of time the relay will delay its action from a very small fraction of a second to one or more seconds.

Fig. 157 shows two sketches of relays of this type. The one at "A" uses a short-circuited coil. The one at "B" uses a copper ring.

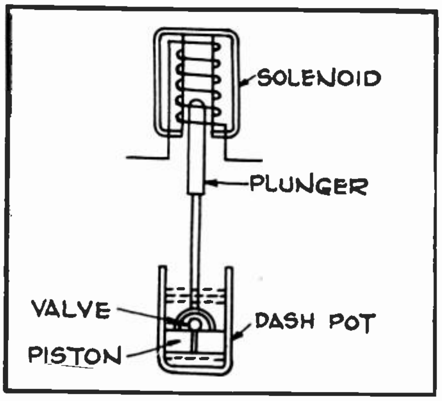

Fig. 158. This sketch shows the use of a dash-pot to slow the action of solenoids and electro-magnets.

Some relays have what is called a "dash-pot" attached to their armature to slow its action. These dash-pots may consist of a plunger in a cylinder filled with oil or air which only allows the plunger to move rather slowly as the oil or air escapes past the edges or through the small opening in the plunger.

Fig. 158 shows a relay equipped with such a dash-pot.

Various selective circuits can be arranged in automatic telephone systems by the use of condensers and choke coils of different sizes.

A condenser placed in the circuit of certain relays will only allow alternating current to pass through and stops all flow of direct current. A choke coil, however, will allow direct current to pass rather freely, but quite effectively blocks the flow of alternating current.

Many of the telephones being installed nowadays for use with manual exchanges are also equipped with a place to mount the dial, because in many localities it is expected that the automatic exchange will replace the manual in a short time.

Fig. 159 shows a very convenient, modern type of desk telephone. With this telephone the receiver and transmitter are both mounted on one handle, so the subscriber doesn't have to move a transmitter stand close to his mouth to carry on a conversation. This receiver and transmitter, when not in use, are laid in a "cradle" which has a small strip in the bottom that is attached to a spring in the stand. This operates a hook switch each time the receiver is removed from or replaced in the "cradle."

Fig. 159. Modern desk type telephone equipped with dial for automatic operation.

Fig. 160 shows a room in an automatic telephone exchange. At the right can be seen a long bank of selectors with white covers over their mechanisms.

Fig. 161 shows a view in another exchange with a switchboard at the left, selector banks in the rear, and a motor generator for supplying the talking and ringing current at the right.

117. TELEPHONE LINES

The operation of the millions of telephones in this country today requires a vast network of telephone lines. These lines can be divided into two general classes—the small individual or party lines which connect one telephone or a small group of telephones to the central exchange, and main lines, or **Trunk** lines, as they are called, which connect from one exchange to another.

The individual or party lines, of course, are only in use when the subscribers whose telephones are on them are talking.

The trunk lines, however, carry the main business between exchanges and large towns, and are kept busy the greater portion of the time. These trunk lines might be called the arteries of the telephone system and are fed by the smaller branch lines from each exchange.

118. GROUND CIRCUITS. CABLES

Some telephone lines are made up of two insulated wires for each circuit and known as metallic circuits. Other lines use one insulated wire on the poles, and the other side of the circuit is completed through earth by carefully made ground connections. Some lines which use a two-wire or metallic talking circuit use a ground circuit for ringing.

Telephone line wires are usually bare and without any insulation except the small glass insulators which support them on the poles. Under normal conditions this is sufficient insulation, because they do not operate at high voltages. Many telephone lines use galvanized steel wire and some use copper wires. Most all of us have seen trunk lines following highways or railroads from one town to another and with their hundreds of wires on numerous cross arms on the poles. This type of line is being replaced in many localities by the more compact telephone cables.

The large masses of open wires on the older lines offer a great deal of wind resistance and accumulate enormous loads of sleet at certain times of the year. This has a tendency to break down poles and disable the lines, making them very costly to keep in repair. Where cables are used, one lead sheath about 2 to 3 inches in diameter may carry from 500 to 1,200 pairs of small wires. These individual wires are all insulated from each other with proper wrappings and the entire cable insulated from the lead with an additional wrapping. Such cables are very heavy and not strong enough to support their own weight between long spans. Therefore, they are usually supported by what is called a **"Messenger"** cable made of stranded steel wires, and to which the lead cable is attached at frequent intervals by means of hooks or wire supports.

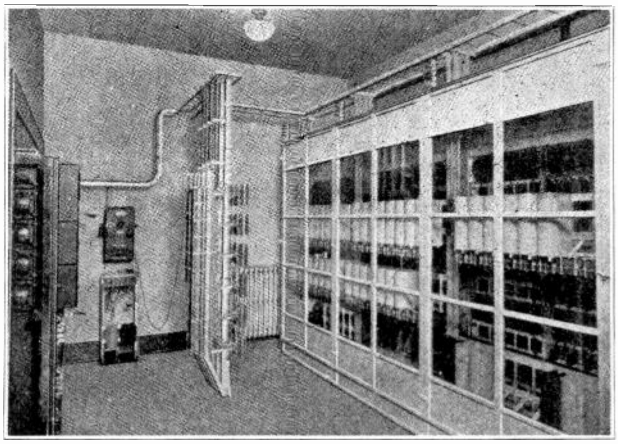

Fig. 160. This photograph shows a view of the selector units in an automatic telephone exchange.

The lead sheath protects the wires from moisture and injury, and cables of this type can be run underground in cities, as well as overhead on poles across the country. In connecting or repairing such cables the small wires are spliced separately, soldered, and carefully reinsulated with sleeves of paper or other insulation over the splice. The numerous splices are often staggered or made a few inches apart to prevent too large a bulge in the cable at the joints.

When the wires are all spliced, a large lead sleeve, which has been previously slipped over the cable, is then slid over the splice and sealed in place with hot lead, similar to a "wiped" joint in lead piping.

The entire splice is then dried out by pouring hot parafin through it and finally filled with parafin or other insulating compound, and the small filler hole in the lead sleeve is then sealed tightly.

All moisture must be kept from the inside of such cables and splices.

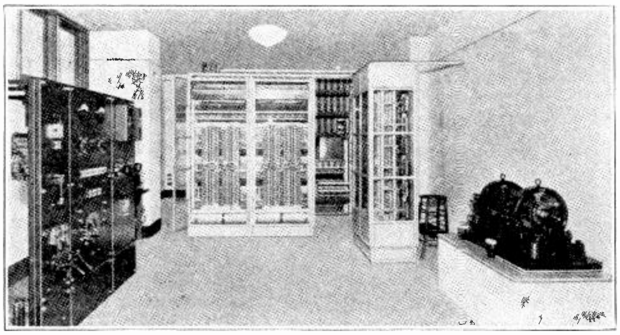

Fig. 161. Here we have another view of an automatic exchange showing the switching units in the background, power switchboard on the left, and motor generator on the right.

119. LIGHTNING PROTECTION AND TRANSPOSITION

Where open wire lines are used, it is customary to run lightning ground wires from the top of certain poles along the line down to an earth ground at the bottom of the pole. These wires serve as small lightning rods to drain severe static charges and lightning from the telephone line. Small lightning arresters are often used at the 'phones on rural party lines to ground any lightning charges and prevent damage to telephones and property.

Where telephone lines run parallel to power lines they often pick up, by magnetic induction, an interfering hum. To avoid this, the pairs of wires should occasionally be crossed into opposite positions on the poles or cross arms, so that one wire will not be closest to the transmission line throughout its entire length.

This crossing of wires to prevent induced interference is known as transposition. Sometimes it is also done to avoid "cross-talk" or induction from other telephone wires.

Transposing the wires frequently and evenly will balance out most of this induction. Telephone lines should never be left close enough to high voltage power lines so that there would be danger of them coming in contact with each other, for in case they did people using the telephone lines might be injured.

Satisfactory telephone operation depends to quite an extent on proper line construction. Therefore, all telephone lines should be made with the proper materials and the wires properly spliced with low resistance joints, ground connections kept in good condition, etc.

120. PHANTOM CIRCUITS

Considerable economy and saving of wire can be effected in telephone line construction by the use of what are known as **"Phantom"** circuits. By this method one additional circuit can be obtained for each pair of lines already in existence. This can be done without the addition of any other wires, merely by using two existing lines, one to form each side of the new line or phantom circuit.

By the use of proper induction coils, or **Repeater Coils,** as they are called, a conversation can be carried on over this phantom line without interfering with either of the two actual lines. A repeater coil is simply a transformer with primary and secondary windings of an equal number of turns.

Fig. 162 shows the manner in which a phantom circuit is obtained from two metallic circuits. Lines No. 1 and 2 are ordinary metallic lines or physical circuits using repeater coils to transfer the current impulses from the transmitter circuits to the lines. Line No. 3 is a phantom circuit obtained by connection of its coil to the exact center of each of the others on lines 1 and 2. With this connection the current in line 3 can divide equally through each of the other lines or pairs of wires and, therefore, does not interfere with their talking currents at all.

With four metallic circuits we can obtain two phantom circuits directly, and then a third phantom circuit between the first two, so we find that where a considerable number of trunk lines are run from point to point a large number of phantom circuits can be arranged to use the same lines.

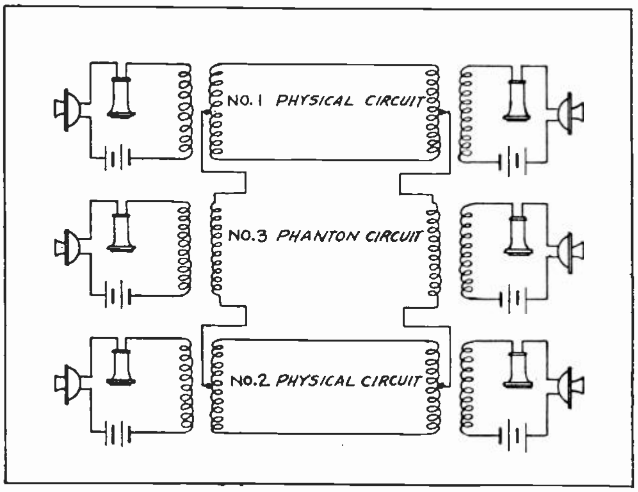

Fig. 162. Elementary sketch showing how a phantom circuit is obtained from two metallic or physical circuits.

This practice is also followed in telegraph work.

Telephone lines, if used on trunk circuits and special radio station wires, are constructed with a carefully determined amount of resistance. Special resistance and impedance coils are placed in the circuit of such lines to make them most efficient in the handling of certain frequencies set up by voices or musical notes. This principle will be more fully explained in a later section on radio.

Operators of radio broadcasting stations frequently lease wires from the telephone companies to use in picking up and transmitting certain news or entertainment features at quite a distance from a broadcasting station. Telephone systems are becoming more and more linked up with radio stations, not only for amusement programs, but for the trans-oceanic and commercial conversations as well.

121. TELEPHONE TROUBLES

Faults and troubles arising in telephones or telephone exchanges can usually be located by the same general methods of systematic testing that have been covered in connection with other signal circuits. A diagram of the wiring and connections is always of the greatest help in testing any telephone circuit.

Some of the more common telephone troubles which occur in the separate parts, such as transmitter, receiver, hook switch, etc., have already been mentioned. Other likely places to look for faults are at the spring contacts of key switches and relays, which may have become burned, dirty, or bent out of shape; wire terminals, which may have become corroded or loose on the binding screws; weak batteries, weak magneto magnets, weak receiver magnets, etc.

Telephone circuits and devices can often be tested very conveniently with a telephone receiver, as well as with test lamps and buzzers. The receiver can be used to determine if the talking current is coming through to certain circuits, and also to determine whether high resistance circuits are completed or not, by the clicks which should be heard in the receiver when its terminals are touched to any line circuit.

Careful application of your knowledge of the principles of fundamental telephone parts and circuits and methods of systematic trouble shooting should enable you to locate most any of the ordinary troubles in telephone equipment.

Don't forget that a thorough understanding of the material covered in this section on telephones will be of great help to you in any line of electrical work, and particularly in radio, if you should follow this branch at any time.

COYNE
Electrical School
CHICAGO ~ ~ ILLINOIS
ESTABLISHED 1899

ELECTRICAL CONSTRUCTION
AND
WIRING FOR LIGHT AND POWER

Section One

Code, Conductors, Splicing and Soldering
Types of Wiring Systems

ELECTRICAL CONSTRUCTION

Wiring for Light and Power

Electrical construction and wiring offers a tremendous field of opportunity for practical trained men, both in interesting jobs at good salaries with various companies and employers, and also to enter a business of their own.

Naturally, every piece of electrical equipment manufactured and sold each year, must have wiring and circuits to carry the current to it, when it is installed. This includes the billions of dollars worth of electrical machinery and devices made each year, and also the millions of electric lights and lighting fixtures.

Think of it, in old buildings and existing plants, new wires and extensions to the circuits must be run each time additional equipment is installed; and in the new buildings erected, complete new wiring systems must be installed.

Today almost every new home erected in any city or small town, is wired for electric lights and appliances when it is built. Tens of thousands of old houses are being wired, and thousands of others rewired or having improvements and additions made to their wiring, to provide better lighting and more complete use of electrical convenience devices.

Plans are being made to rapidly electrify the last few small towns, which have not yet had electricity, and even the farms are now rapidly electrifying. Nearly one million farms already have their buildings wired, and electric supply from their local power companies' lines, or their own private light plants. Many of our graduates who came from farms, have returned to their own home territories, and made big money wiring houses and farm buildings, installing and servicing farm light plants, radios, refrigerators, lights, and motors.

1. GOOD KNOWLEDGE OF WIRING NEEDED IN MAINTENANCE WORK

Factories and industrial plants throughout this country are over three-fourths electrified at present, and thousands of them employ from one to a dozen or more electrical wiremen, just to take care of their electrical construction and continual expansion.

The few old plants which have been operated by steam or other power, are rapidly changing over to electric power and machines, and modern electric lighting.

Practically every new factory or industrial plant built nowadays, is completely wired and electrified.

These plants keep thousands of trained electrical men constantly employed in interesting and good paying work, maintaining and repairing their electrical machines, lights, and wiring circuits; and installing the new motors, lights and wiring as it is required.

This field of **Electrical Maintenance** work requires men who know the principles and methods of modern wiring thoroughly, so every electrical man should obtain a thorough knowledge of the material covered in this section, whether he intends to specialize in wiring and electrical construction or not.

The electrical maintenance man in any plant will usually have a great variety of interesting work to do, and an opportunity to use every bit of general knowledge he can obtain.

2. VALUE OF GENERAL KNOWLEDGE OF WIRING

The electrician in the small town will also usually be called upon to wire door bells, lights, and power motors; and to shoot trouble and make repairs on everything from a burned out fuse or dead dry cell, to shorts in wiring or faults in power machinery. And even the man who specializes in one line of electrical work, can always use a good general knowledge of electricity, and particularly of methods of wiring.

Many of our graduates make big money in a business of their own in this field, contracting general wiring or specializing in either the wiring of new buildings or old houses.

In addition to wiring contracting, many of them do electrical merchandising, selling lighting fixtures, electrical appliances for the home, radios, etc. The profits from such a business, often started in a very small shop or the basement of their own home, frequently build up a splendid business, paying from $5,000.00 to $20,000.00 per year clear profit.

3. IMPORTANT POINTS IN WIRING

The important things to be considered in any electrical wiring job are: First, the selection of wires of the proper size to carry the amount of current required by the devices, and with the proper insulation according to the voltage of these wires; Second, proper mechanical support and protection for the runs of wire; Third, secure and permanent splices and connections; Fourth, protection and precautions to eliminate all danger of fire or shock.

Each of these features will be covered thoroughly in the following sections. When installing any wiring system these points should be constantly kept in mind, and all work done accordingly.

In years passed a lot of electrical wiring was installed rather carelessly, mainly with the idea of supplying current to the devices requiring it, but without proper consideration for permanence, and safety from fire and shock hazard. As a result many fires originated from defective wiring, causing short circuits, sparks, and flashes, or just overheated wires. In other cases, people received electric shocks or injuries by coming in contact with wires that were not properly insulated.

4. INSPECTION—AN ADVANTAGE TO THE TRAINED MAN

Nowadays there is a general tendency in all electrical construction to follow certain very high standards in the selection of materials, quality of workmanship, and precautions for safety. A great deal of the old wiring is being entirely replaced, and new wiring in most towns and localities must be done according to very strict inspection requirements. This is not at all a handicap, but rather it is a decided advantage for the trained electrical man who knows how to do this work as it should be done, and according to these rules. It makes his services much to be preferred to those of the man who does not know modern methods, or will not recognize the value and importance of safety-first rules in electrical wiring.

5. NATIONAL ELECTRIC CODE

To standardize and simplify these rules and provide some reliable guide for electrical construction men the **National Electric Code** has been provided. This Code was originally prepared in 1897, and is kept frequently revised to meet changing conditions, and improved equipment and materials. It is a result of the best efforts of electrical engineers, manufacturers of electrical equipment, insurance experts, and architects.

This Code book is now published by the National Board of Fire Underwriters, and contains simple specific rules and instructions which, if followed, all tend to make electrical wiring and construction as safe and reliable as possible. Every electrician should have an up-to-date copy of the National Code at all times, and should familiarize himself with the more important rules pertaining to his work, and if he does he will find them of great help in making certain decisions on the job, and performing his work in a manner that will always be a credit to himself and his profession.

6. STATE AND LOCAL CODE RULES

Most states now require that all electrical work be done in accordance with the National Code, and even in the few states where this may not be required throughout, most of the towns and cities do require that all wiring within their limits follow the Code.

Throughout the following pages we shall quote occasionally some rules of the National Code.

The Underwriter's laboratory also tests various electrical materials and supplies, such as wire, switches, fuses, insulations, etc. If these are deemed safe and reliable, and meet the laboratory standards for quality, they carry the underwriters stamp of approval.

This is a good indication for the conscientious electrical man to follow in selecting the best of materials.

Some states have prepared special codes and rules of their own, usually applying to wiring in schools, auditoriums, theatres, and other public buildings, and also to transmission lines, and outdoor construction where the public is involved. These rules, however, all agree with those of the National Code.

A number of towns and cities have their own local code or rules, which in general may be based upon or similar to the National Code, but will have a few specific rules on certain classes of work, which are more rigid than the National Code.

In addition to the National Code and local codes of certain cities, the power companies to whose lines the wiring system may be connected may have some certain rules regarding service wires, meter connections, size and type of devices, and class of equipment connected to their system. So, in starting to do wiring in any town, it is well to familiarize yourself with these local rules if there are any.

In addition to these important rules, if you will also follow the instructions given in the following pages, and apply your knowledge of general principles of electricity, along with good common sense and careful workmanship, you should be able to do most any kind of electrical wiring quite successfully.

Certain things in electrical wiring are done according to what might be termed "standard practice". That is, while there are no set rules for them, experienced electrical men have found that certain ways or methods are generally best, and these have been more or less generally adopted by men on the job.

For example, when installing single pole push button switches, the white button is always placed at the top. Following general rules of this kind simplifies the work a great deal and avoids confusion, both in the wiring, and to the owners of the buildings in which it is installed.

Every electrician should always be on the alert to notice and remember these little details or "wrinkles" of the trade. A number of them will be mentioned in this section.

7. CLASSES OF WIRING SYSTEMS

Wiring systems can be separated into the following classes:

D. C. or A. C. systems, and two wire or three wire systems.

Whether direct or alternating current is to be used depends entirely on which is available from the power companies' lines; or, in the case of a private plant, which type of plant is used.

Direct current is generally used only where it is not to be transmitted over distances greater than one-half mile. It has certain advantages for the operation of special types of variable speed motors, and motors requiring extra heavy starting power for frequent starting and stopping; also where storage batteries are to be charged from the lines, or where arc lamps, and other special D. C. equipment are in use.

Alternating current is equally as good for lighting with incandescent lamps, and much more desirable and economical where the energy has to be transmitted considerable distances. In such cases, it can be transmitted at high voltage for line economy, and then the voltage reduced at the customer's premises by use of step-down transformers.

For power purposes, recently developed alternating current motors will also meet almost every condition that direct current motors formerly were needed for. By far the greater number of wiring jobs which you will encounter will probably be on alternating current systems.

The materials and methods used are just about the same for either D. C. or A. C. systems, except for a few precautions on A. C. circuits which will be covered later.

The simple two wire system is in common use for wiring small homes and buildings where only one voltage and small amounts of power are required. The circuits and connections for such a system are extremely simple, and consist merely of running the two wires to each lamp or device to be used, and of course with the proper fuses and switches. Fig. 1 shows the important parts of a two wire lighting system.

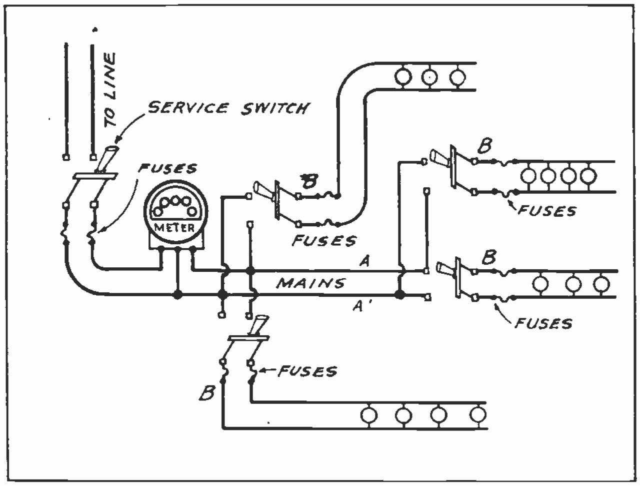

Fig. 1. This sketch shows a simple two-wire system with the service wires, mains and branch circuits.

This system consists of the **Service Wires** which lead to the power supply, **Service Switch** and **Fuses, Meter, Main Wires** or **Feeders,** and **Branch Circuits.** Each branch circuit has its own switch and fuses. The separate light switches are not shown in this diagram. All of the circuits marked "B" are branch circuits, while "A" and "A1" are the main wires which feed the branch circuits. The Watthour meter is connected in the mains, near the service switch, to measure all the energy used in the entire system.

The **Edison Three Wire System** can be applied to either A. C. or D. C. installations. It provides two different voltages, one for lights and one for motors, and also effects a considerable saving in wire size, where used for lighting only. This system will be explained in detail later.

8. WIRING MATERIALS—CONDUCTORS

Before going farther into the methods of wiring it will be well to consider some of the materials used.

Conductors used in wiring for light and power must be somewhat different from those used for low voltage signal wiring, as they usually carry much heavier currents and at higher voltages. They are of course made of copper, as this we know is one of the very best conductors of electric current, and its softness and flexibility make it very desirable for use in inside wiring.

The very low resistance of copper enables it to carry the current with much less loss by voltage drop and heat. So copper wires and cables are used almost entirely for wiring for light and power. Copper wires for interior wiring are usually "annealed" or softened by a heating process as this makes the copper much more flexible and improves its conductivity.

We found that No. 18 or 16 B. & S. (Brown & Sharpe) gauge wires were used for bell wiring, but No. 14 is the smallest sized wire allowed in wiring for light and power. Sizes 14, 12, 10 and 8 are used in solid wires, but when used in conduit the larger sizes are stranded to obtain greater flexibility.

9. INSULATION

Bare conductors can be used in a few places such as on switchboards and distribution panels where they can be rigidly supported and held apart on proper insulators, or insulating panels. For general wiring, however, the wires must be properly insulated to prevent persons from coming in contact with them, and also to prevent short circuits and grounds which would not only interfere with operation of the attached equipment, but also cause fire hazards.

Rubber and braid coverings are the most common forms of insulation. The rubber being of extremely high resistance to electricity provides the best insulation to confine the current to the wires and prevent leakage to the other wires or metal objects. The cotton braid covering is used over the rubber to protect it from mechanical injury. This is called ordinary rubber covered (R.C.) wire, sometimes designated by the letter "R" only.

It is made with both single and double braid coverings, and is very generally used in interior wiring. Fig. 2 shows three forms of rubber and braid insulation on solid wires, and Fig. 3 shows both a solid and a stranded wire with their insulation.

For outdoor use, we have wires with weather proof (W. P.) insulation, consisting of three or

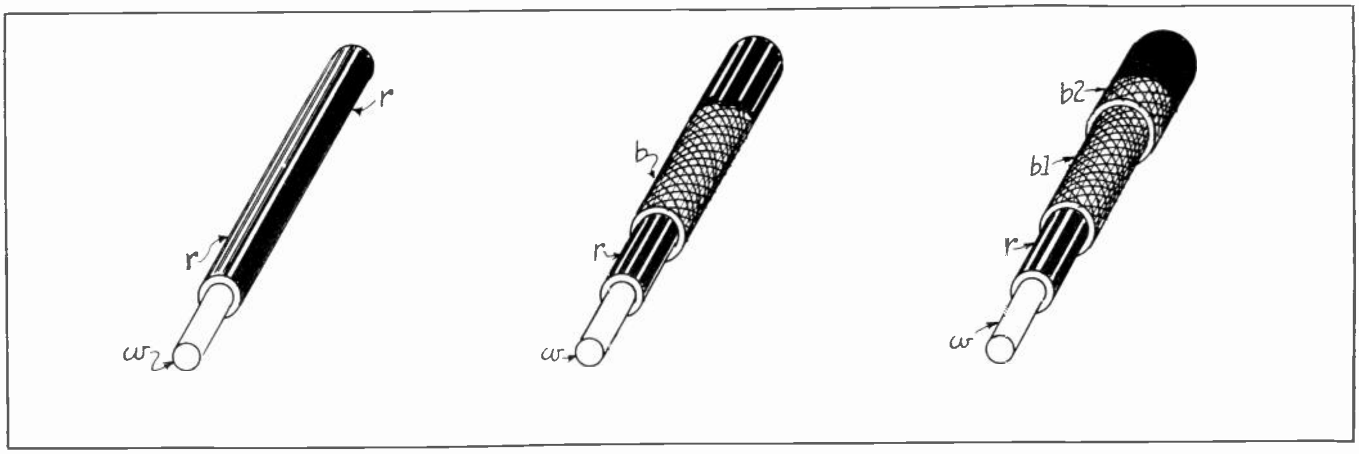

Fig. 2. Three samples of insulated conductors. The wire at the left is covered with rubber only. The one in the center has a layer of rubber and one of cotton braid. The one on the right has one layer of rubber, and two layers of braid. These would be called respectively: Rubber covered (R. C.), Rubber and braid covered, and Rubber and double braid covered.

more layers of braid, soaked or impregnated with moisture resisting compound of a tarry nature.

This kind of insulation is much cheaper than rubber, and is required for outdoor use in many cases, and in some damp locations inside buildings. It should not be used where it is subject to heat or fire, as it is inflammable.

Fig. 4 shows three pieces of wire with weather proof insulation.

For places where the wire is subjected to heat but not moisture, **Slow Burning** (S. B.) insulation with fire resisting braids is used.

Some wires for use in very dry hot places, or for heater cords, are covered with a layer of asbestos fibres for maximum heat and fire resisting insulation.

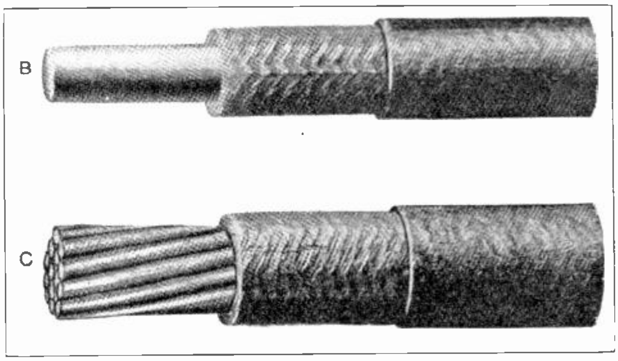

Fig. 3. Examples of solid and stranded conductors with their insulation. The stranded conductors are used in the large sizes because they are more flexible.

Some wires are also prepared with a combination of slow burning and weather proof insulation (S. B. W.). Two such wires are shown in Fig. 5.

Insulated wires are often made up in twisted pairs as shown in Fig. 6, for lamp cords and leads to portable devices. Such wires are usually made of many strands of very fine wires for good flexibility.

The copper wires are usually "tinned" or coated with a thin layer of lead and tin alloy, to prevent corrosion from contact with the chemicals in the rubber, and to make it easier to solder them when splicing.

The outer braid coverings on wires are sometimes made in different colors, particularly black and white, or light gray; or with a colored thread woven into them in order to easily mark or identify certain wires. Reasons for this will be explained later.

For extremely damp places or where wires are to be run under ground, we have wires and cables with a lead sheath over the insulation.

10. WIRE SIZE VERY IMPORTANT

Copper wires can be obtained in almost any desired size and with a variety of insulations for various uses.

It is very important to use wires of the proper size for any wiring job, because if they are too small for the current load they have to carry, they will

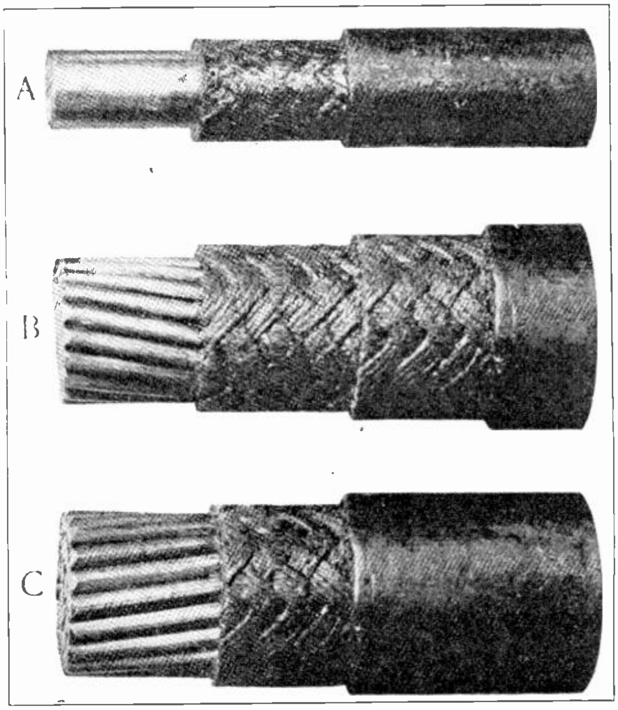

Fig. 4. These wires have what is called "water-proof" insulation, or braid filled with tarry water-proof compound. They are for use outdoors or in damp locations.

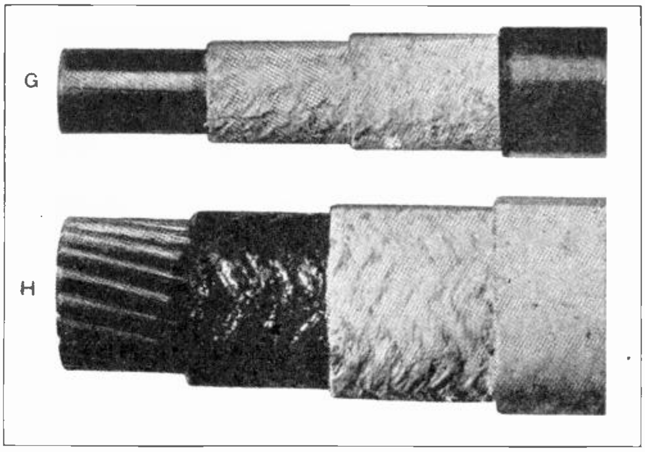

Fig. 5. In this view the upper conductor has a special fire resisting covering known as "slow burning" insulation. The lower conductor has a combination covering of both water-proof and slow burning insulation.

overheat. Excessive heat not only increases the resistance of the wire and creates a greater voltage drop and energy loss, but it also damages the insulation and in some cases results in completely burned out wiring or causes fires.

If wires that are too small are used, the excessive voltage drop causes the lights or equipment to receive less than their rated voltage, which usually results in their unsatisfactory operation. This is particularly true of lighting systems, as a very few volts drop will cause an incandescent lamp to deliver much less than its rated light.

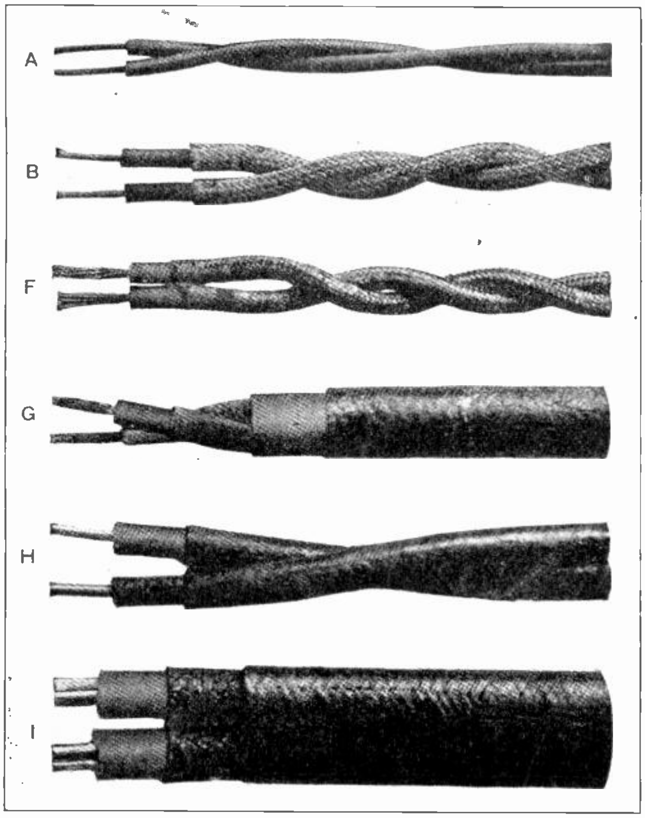

Fig. 6. Conductors are often arranged in pairs for convenience in running two-wire cicuits. Several types of these are shown above.

The National Code specifies the maximum amount of current that shall be allowed on the common sized wires, and this should be followed closely for safe and satisfactory results in any wiring system.

Fig. 7 shows a convenient table which gives the maximum curent capacity of each size of wire from No. 18 up, and for rubber insulation.

If wires are allowed to carry more than these amounts of current for any length of time, they will heat up and the rubber will rapidly lose its insulating quality at these higher temperatures.

B. & S. Gage	Diam. of Solid Wires in Mils.	Area in Circular Mils.	Table A Rubber insulation Amperes
18	40.3	1,624	3
16	50.8	2,583	6
14	64.1	4,107	15
12	80 8	6,530	20
10	101.9	10,380	25
8	128.5	16,510	35
6	162.0	26,250	50
5	181.9	33,100	55
4	204.3	41,740	70
3	229.4	52,630	80
2	257.6	66,370	90
1	289.3	83,690	100
0	325.	105,500	125
00	364.8	133,100	150
000	409.6	167,800	175
		200,000	200
0000	460.	211,600	225
		250,000	250
		300,000	275
		350,000	300
		400,000	325
		500,000	400
		600,000	450
		700,000	500
		800,000	550
		900,000	600
		1,000,000	650
		1,100,000	690
		1,200,000	730
		1,300,000	770
		1,400,000	810
		1,500,000	850
		1,600,000	890
		1,700,000	930
		1,800,000	970
		1,900,000	1,010
		2,000,000	1,050

Fig. 7. This very convenient table gives the current carrying capacity for the various sizes of wire, and also their diameter, and area in circular mils.

For wires with other insulation such as slow burning or weather proof coverings, you can allow from 25 to 50 per cent more current, as these insulations will stand slightly higher temperatures without damage.

Examine the table in Fig. 7 very carefully, and become familiar with its use, as it will be very convenient to you many times from now on.

The first column gives the wire sizes in B. & S. gauge numbers, from 18 to 0000 or "four ought" as it is called. From this size up the larger cables have their sizes given in circular mil area, and can be followed on down the third column to 2,000,000 circular mils.

The second column gives the diameter of the bare wires in mils (thousandths of an inch), and the third column, as before stated, gives the cross sectional area of each size in circular mils. Then in the last column can be found the proper maximum current allowed for any wire.

The term **Circular Mil** means the area of a round wire one thousandth (1/1000) of an inch in diameter. This is the common term for rating and calculating sizes of electrical conductors, and will be covered more fully in a later section on wire calculations.

The longer a wire, the greater is its resistance, and the **Voltage Drop is proportional to both the Resistance and the Current carried.** Therefore, where the wire runs are quite long, we may not wish to allow even the amount of current that the code table does, because the voltage drop would be too great.

In such cases we can determine the exact size of wire to use for any given current load and any desired voltage drop, by use of a simple formula which will also be given and explained in the section on wire calculations.

Referring again to the table in Fig. 7, you will note that the larger the gauge number the smaller the wire. This is a good point to keep in mind so you will not become confused on the sizes and numbers.

Fig. 8 shows a wire gauge often used to determine the exact size of a wire by slipping the bare end of the wire in the slots until one is found that it just fits snugly. The gauge number is marked on the disk at that slot. Be sure to fit the wire to the straight slot and not in the circle at the end of the slot.

Fig. 8. A wire gauge of this type is commonly used to determine the size of wires for various uses.

It often comes in very handy to remember that when you have a wire of any certain size, another wire three sizes larger will have just about double the area; or one three sizes smaller, about one-half the area. For example, a number 3 wire is just about double the area of a number 6; or a number 2 wire just half the area of a number 00.

Another very handy fact to remember is that a number 10 wire has approximately one Ohm resistance per thousand feet, and a number 14 wire has about 2.5 Ohms per thousand feet.

11. SPLICING

In running wires for any electrical system, it is necessary to make numerous splices of various kinds, and a good knowledge of proper methods of splicing and soldering is of the greatest importance for any electrician to have, whether he follows new wiring or merely maintenance and repairs.

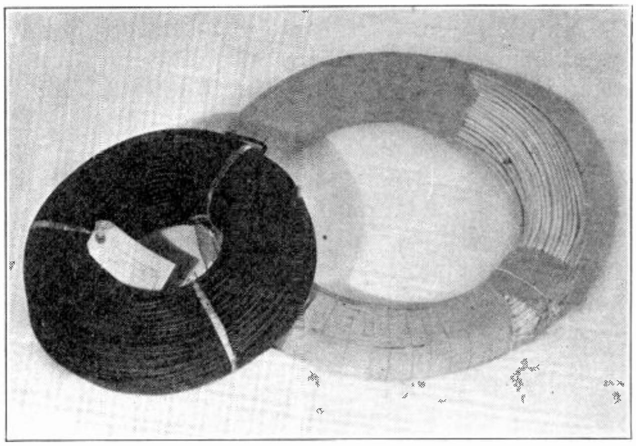

Fig. 9. Two coils of ordinary rubber and braid covered No. 14 wire, such as commonly used in house wiring jobs. The advantage of having the insulation in black and white colors will be explained later.

The old saying that a chain is no stronger than its weakest link, applies in slightly different words; almost as well to a wiring system or, the circuit or system is no better than its splices.

Splices properly made and soldered will last almost as long as the wire or its insulation, but poorly made splices will always be a source of trouble and will overheat, burn off their taping, and cause high resistance circuits and sometimes fires.

A good test of an electrician is in the kind of splices he makes.

The requirements for a good splice are, that it should be **Mechanically and Electrically Secure** before the solder is applied. Solder is then applied, not to strengthen the splice or improve its conductivity, although it does do both to some extent, but for the real purpose of preventing corrosion and oxidization of the copper.

12. COMMON TYPES OF SPLICES

Several of the more commonly used splices are the **Pigtail, Western Union, Tee** or **Tap, Knotted Tap, Fixture Splice,** and **Stranded Cable Splice.** Each of these will be explained in detail.

13. STRIPPING AND CLEANING WIRES

The first very important step in making any splice is to properly strip and prepare the ends of the wire. Stripping means removing the insulation from the wire a proper distance back for the splice to be made. This may range from 1½ inches to 3 or 4 inches for various splices.

The rubber and braid should be removed with a knife, as shown in the upper view in Fig. 10. The knife and wire should be held in a position similar to that used when sharpening a pencil, and the braid and rubber cut through at an angle as shown. Be very careful not to cut or nick the wire, as it reduces the conducting area, and makes it very easy to break at that point.

Never cut the insulation as in the lower view in Fig. 10, as one is almost certain to nick the wire in cutting in this manner, and it makes a more difficult splice to properly tape.

After cutting through the insulation and down to the wire, let the blade slide along the wire, stripping the insulation to the end; keeping the blade almost flat against the wire, so it does not cut into the copper.

After removing the insulation with the knife the wire should be scraped with the back of the blade, to remove all traces of rubber and until the wire is thoroughly clean and bright. If the wire is tinned do not scrape deep enough to remove the tinning, but leave on as much as possible, as it makes soldering easier.

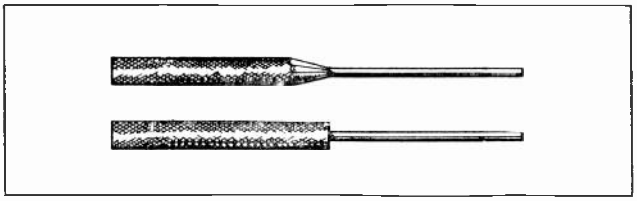

Fig. 10. This sketch shows the proper method of stripping the insulation from a wire in the upper view. The lower view shows the wrong way.

It is impossible to do a good job of soldering if the wires have bits of rubber, dirt, or grease left on them, and as they are very difficult to clean after they are spliced, be sure to do it properly before starting the splice.

A number of wire stripping tools are made and on the market, and some of them are quite fast in operation, but for rubber covered wire and for doing the work right on the job, nothing is much handier than a good sized electricians' knife with a sturdy blade of good steel. A piece of sandpaper can be used to clean the wire if desired.

14. "PIG TAIL" SPLICE

To start a **Pig Tail** splice, strip and clean about two inches on the end of each wire, then hold the wires as in Fig. 11-A, and twist them together a few turns with your fingers; then finish the ends with a pair of pliers. Be sure that both wires twist around each other, and that one does not remain straight while the other wraps around it. They should appear as in Fig. 11-B.

This splice should have at least five good tight turns, and then its end should be bent back as in Fig. 11-C to prevent it from puncturing the tape.

Three or more wires can be connected together by a pig tail splice, and it is commonly used in making splices of wire ends in outlet boxes, and at places where there is no strain on the wires.

In making any splice, always be sure to wrap or twist the turns tightly around each other, as they should not be able to slip or shift upon each other when the splice is complete but not yet soldered. Make the splice itself tight and strong, and don't depend on the solder to do this.

15. WESTERN UNION SPLICE

For splicing straight runs of wire the **Western Union** splice is one of the oldest and most commonly used. It is a very strong splice and will stand considerable pull and strain on the wires. It can be used for splicing large solid conductors and line wires as well as the smaller wires.

In starting a Western Union splice, strip and clean about four inches of the end of each wire.

Hold the ends together tightly with your hand or pliers as in Fig. 12-A, gripping them at the point where they cross. Twist them together a couple of gradual or spiral turns as in Fig. 12-B. These are often called "neck" turns. Then wrap the end of each wire around the other wire in five or six neat, tight turns as in Fig. 12-C. A little practice will be required to get the knack of wrapping these ends tightly and smoothly by hand. If one or two turns do not grip the straight wire tightly, pinch them down carefully with the pliers.

To finish this splice, trim the ends off and pinch them down tight with the pliers, so they will not project and damage the tape later. The splice should then appear as in Fig. 12-D.

Practice making this splice a number of times, as it is one of the most common and important ones used, and every practical man should be able to make it well. Each time you make it examine it carefully and try to improve until it is perfect.

Be careful not to nick or mar wires any more than necessary with the "bite" of your pliers, when gripping them during splicing.

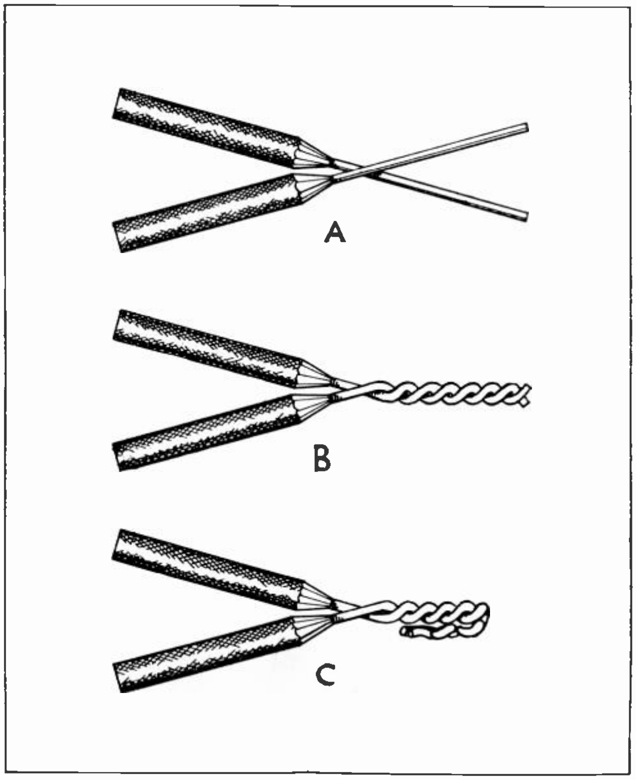

Fig. 11. This diagram shows very clearly the several steps in making a "Pigtail" splice. Examine it very carefully.

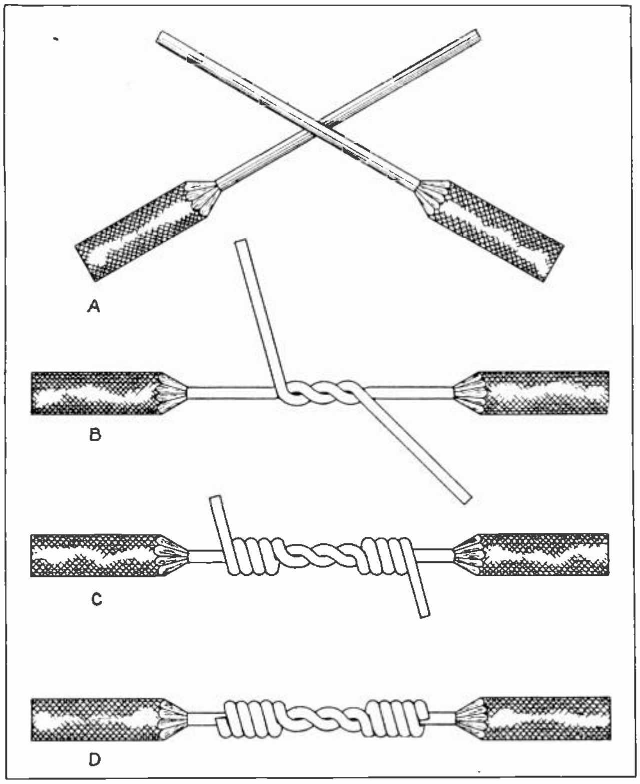

Fig. 12. The above four sketches show the steps and procedure in making a "Western Union" splice.

When making a double Western Union splice in a pair of wires together, always stagger them as shown in Fig. 13, so each splice lies near to undisturbed insulation of the other wire, and so they do not make a large bulge when taped.

Fig. 13-A shows how the ends of the wires should be cut in uneven lengths for such a splice. In 13-B is shown the method of spreading them apart to make the splices, and in 13-C the appearance of the finished splice, before soldering and taping.

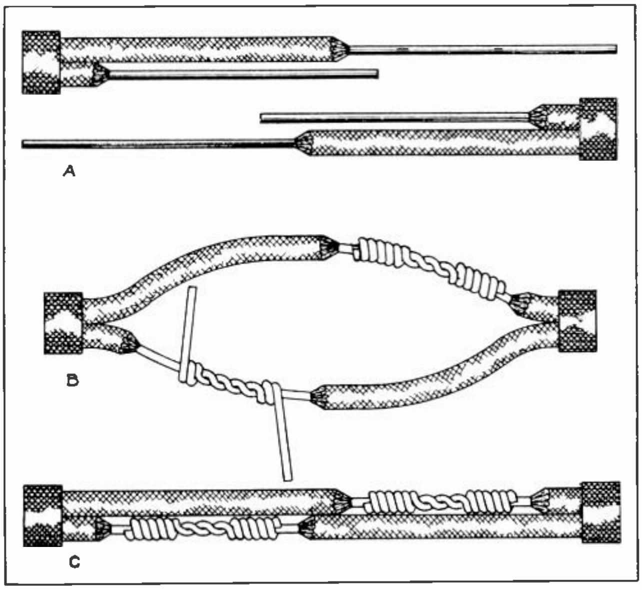

Fig. 13. When making splices in pairs of conductors they should be staggered as shown above so each splice will be near to good insulation on the other wire.

16. TAP OR TEE SPLICE

When a tap or branch is to be connected to a main or "running" wire, we use the **Tap** splice shown in Fig. 14. For this splice, bare about 1 inch on the main wire, and about 3 inches on the end of the tap wire. Then wrap the tap wire tightly about the main wire from five to eight turns, as shown in the figure. The turns should be tight enough so they cannot be slid along the straight wire.

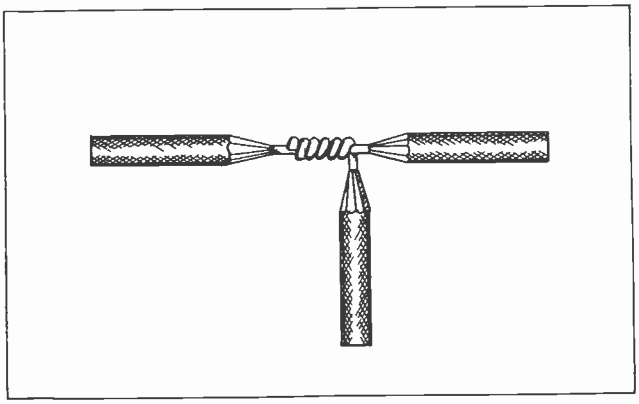

Fig. 14. Simple "Tap" splice used for tapping a "branch" wire to "main" or "running" wires.

17. KNOTTED TAP SPLICE

Where there is a possibility of some pull or strain on the tap wire, we can use the **Knotted Tap** splice which cannot be pulled loose as easily. This splice is shown in Fig. 15, and is very easily made, by simply giving the wire one turn on the side of the tap wire opposite to the side on which the main group is to be, and then doubling back around the tap wire, and winding the balance of the turns in the opposite direction around the main wire. This locks the first turn so it is very secure and hard to pull loose.

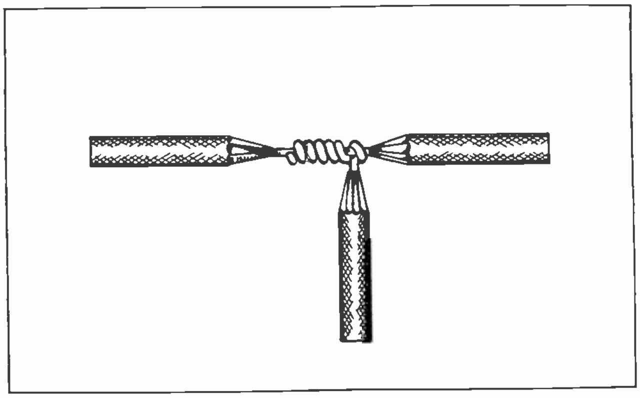

Fig. 15. "Knotted Tap" splice. Note carefully the manner in which the wire is first looped around the branch conductor to lock it securely in place.

18. FIXTURE SPLICE

The **Fixture Splice** which is often used to fasten together two wires of different sizes, is shown in Fig. 16. The various steps in making this splice are as follows: First bare about 5 inches of the end of one wire, and 3 inches on the other wire; then

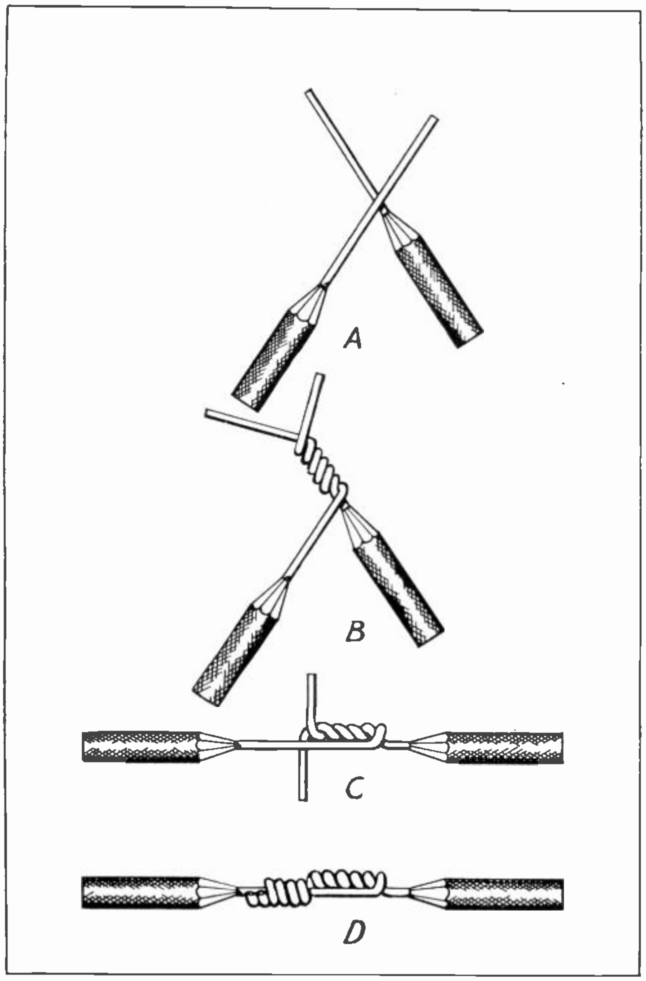

Fig. 16. The above views show the method of making a "Fixture" splice, which is used for connecting together two wires of different sizes.

place them together as shown in Fig. 16-A, with about half the length of the longer bared end crossing the other end, near the insulation. Then twist them both together, as in "B", being sure that they both twist about each other evenly. Then spread the wires apart and bend the twisted ends down tight to the longer remaining bare strip as at "C", and wrap both ends tightly around the wire at this point. The finished splice is shown at "D".

19. CONVENIENT SPLICE FOR LARGE SOLID WIRES

Another splice that is very handy for connecting large solid wires together is the one shown in Fig. 17. This splice is made by simply laying the ends of the two large wires together, overlapping from 2 to 4 inches according to their size, and then wrapping them both with a smaller wire. The smaller wire is much easier to bend, and can be quickly and tightly wound around the large ones. In addition to winding the small wire around both the large ones where they overlap, also wind it a few turns around each one at the end of the splice, as shown in the figure. The ends of the large wire should be slightly bent outward to hold the smaller wire wrapping in place, and prevent the large ones from being pulled out; but be careful not to bend them out far enough to puncture the tape. This splice when well soldered makes one of good conductivity, because of the great area of contact between the small wire turns and the two large ones.

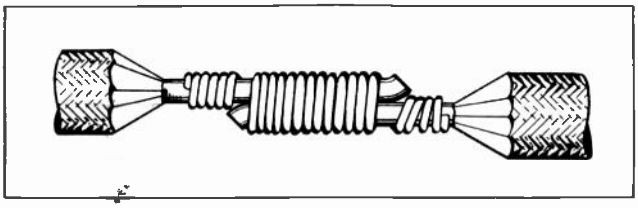

Fig. 17. A very convenient splice to use on large solid conductors. By wrapping them in this manner with the smaller wire we don't have to bend or twist the stiff heavy wires.

20. STRANDED CABLE SPLICE

There are a number of methods used in splicing stranded cables, but the most important points to keep in mind are to be sure to secure enough good contact area between the two groups of wires to carry without overheating the same load of current that the cable will, and to keep the diameter of the splice down as much as possible.

The wires should be stripped back about ten or twelve times the cable diameter, and each strand separately cleaned. Then spread the strands of each cable out fan-wise, as in Fig. 18-A, and butt the cable ends together. Sometimes it is well to cut off

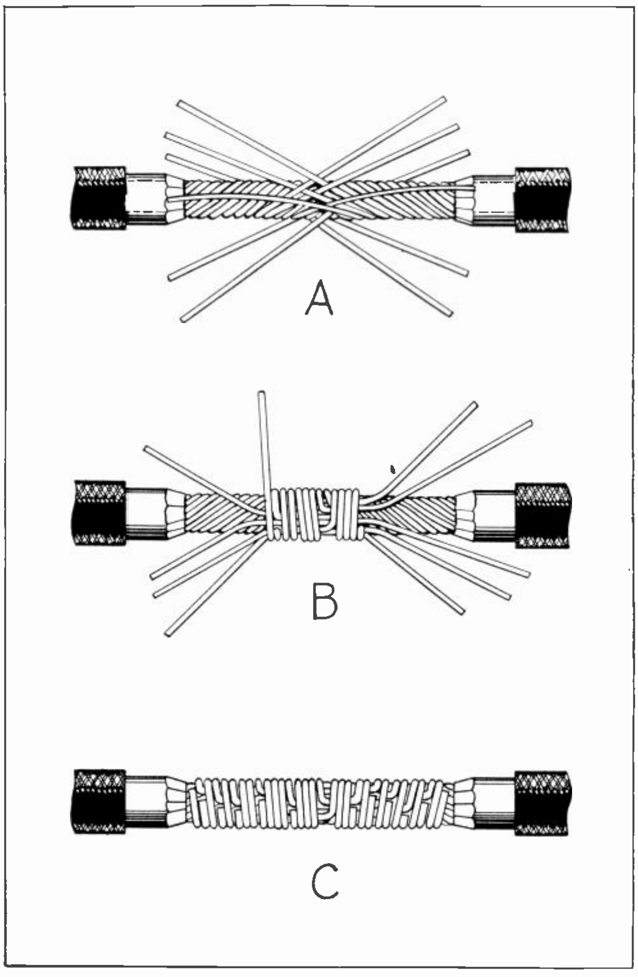

Fig. 18. Examine this diagram very closely and it will be a great help to you in making neat and efficient cable splices.

the ends of a few of the center strands at the point where they butt together, in order to reduce the diameter of the finished splice. A few less than half of the strands can be removed without reducing the current carrying capacity of the joint below that of the cable. This is because the wires of each cable overlap each other, maintaining an area equal to that of the cable anyway.

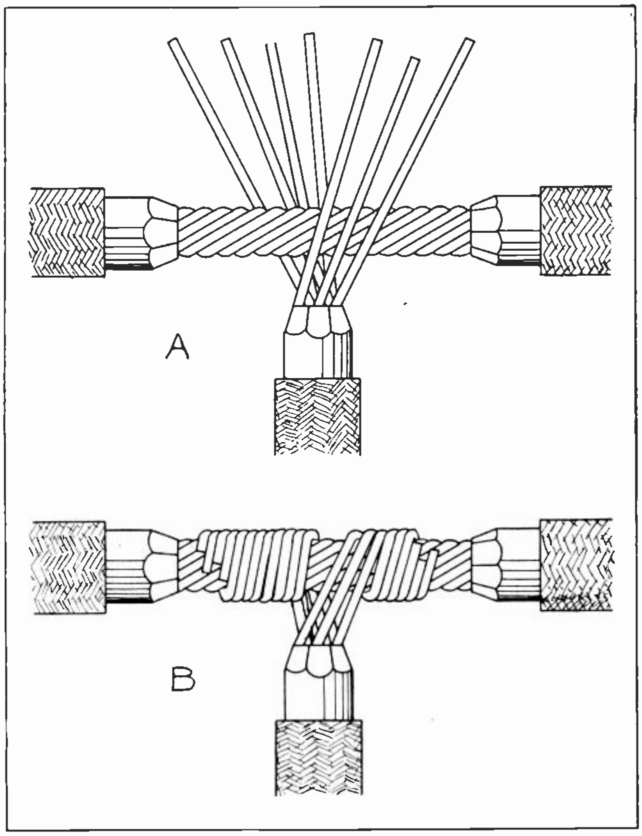

Fig. 19. Method of making a "tap" splice with stranded cables. Note how the wires of the "tap" cable are divided and each group wrapped in opposite directions around the "running" cable.

Next wrap one strand at a time around the cable, starting with strands from the outer surface of the cable, and wind these over the others which are laid tight along the cable. See Fig. 18-B. When one strand is all wound up, start with the next tight to the finish of the first, but continuing to wrap them all in one layer if possible.

The finished splice should appear neat and compact as in Fig. 18-C.

In making a tap splice with cables, bare several inches of the main cable and thoroughly clean all the outer strands, removing all rubber from the grooves with a wire brush or pointed tool or knife. Then spread the cleaned strands of the tap cable, dividing them in half and butt them against the main cable in the center of the bare spot as in Fig. 19-A. Then wrap them in opposite directions around the main cable in one layer or as few layers as possible, as in Fig. 19-B, which shows the completed splice.

21. SOLDERING SPLICES

All splices made in permanent wiring should be carefully soldered, to **Preserve** the quality and conductivity of the splice.

We have already mentioned that the main reason for soldering is not for the purpose of improving the strength or conductivity of the splice, but to prevent corrosion or oxidization from spoiling the good contact of the wires.

22. COPPER OXIDE AND ITS EFFECT ON JOINT RESISTANCE

Copper rapidly oxidizes or "rusts" when exposed to air or moisture, and also corrodes very quickly if any chemicals or chemical vapors come in contact with it.

A bright copper wire soon forms a thin brownish film of oxide on its surface if it is not tinned or covered in an air tight and moisture-proof manner. This film will even form between the wires where they are in contact with each other. Copper oxide is of a very high resistance to electric current flow, and a very small amount of it which may be almost unnoticeable, greatly increases the resistance of a splice. This would be likely to cause serious heating of the joint, after a period of possibly a few weeks or months from the time it was made, even though the splice was practically perfect when new.

A very thin layer of solder, properly applied so that it actually unites or alloys with the clean copper surface, will prevent this oxidization or corrosion, and maintain almost indefinitely, the original low resistance of the splice.

In order to obtain this proper bond between the solder and the copper, the copper must be absolutely clean, then treated with a **Flux** which makes the solder flow freely; and the solder and copper must both be well heated.

If these rules are all kept in mind and carefully followed, you can easily do a good job of soldering that will be a credit and source of pride to you on every job.

23. SOLDERING COPPERS

To heat the splice and melt the solder we use a **Soldering Copper** of the proper size, and which must be kept well cleaned, tinned, and heated. These tools are often called "soldering irons", but they are made of good copper because copper can be readily tinned so the solder will adhere to it and also flow over its surface or point; and also because copper will quickly absorb heat from a torch or flame, and easily give up its heat to the splice and solder. **Copper is an Excellent Conductor of Heat,** as well as electricity, and if you keep in mind that the function of the soldering copper is to impart its heat to the splice, as well as to melt the solder, you will find it much easier to understand soldering and will make a much better job of it. Fig. 20 shows a common soldering copper of the type that is heated in the flame of a blow torch or gas soldering furnace. Such coppers must be reheated frequently, and where much soldering is to

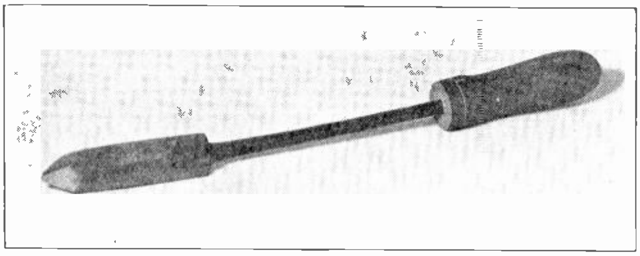

Fig. 20. An ordinary soldering copper of the type commonly used in electrical work.

be done, it is often well to use two of them so one can be heating while the other is in use. Fig. 21 shows a blow torch in use for heating an "iron".

Soldering coppers can be obtained in various sizes, the smaller ones being more convenient for some classes of work, and the large ones holding the heat longer. A half pound copper and a one pound size are generally very good for ordinary wiring.

Wherever electricity is available an electric soldering "iron" can be used very conveniently, as they remain hot while in continual use. They are made in different sizes and with various sized and shaped tips for use on different sized splices and various types of work. Two of these electric "irons" are shown in Fig. 22.

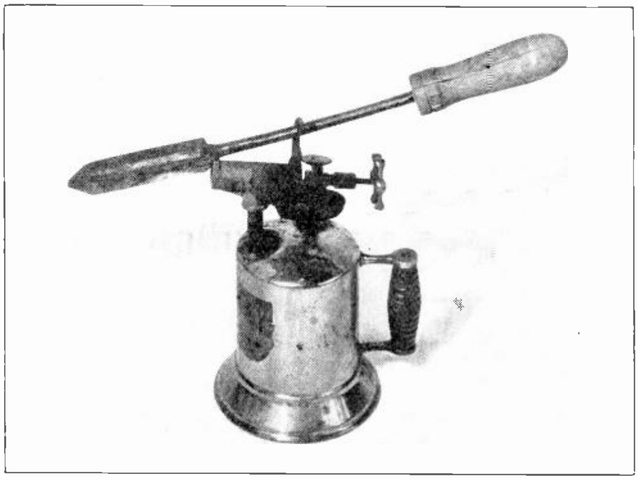

Fig. 21. This photo shows a gasoline blow torch such as commonly used for heating soldering coppers, and splices in electrical conductors.

24. CLEANING AND TINNING

The point of any soldering "iron" must be kept bright and clean and well **tinned,** or it will not "flow" the solder properly or convey its heat readily to the splice.

When very dirty or covered with a heavy scale, or pitted, they should be smoothed and cleaned with a file. When in use on the job they require occasional "brightening up". It can be done by rubbing the point on a block of salammoniac which is obtainable from electric shops and hardware stores in small cakes for this purpose. See Fig. 23.

Rub the heated point on the block and immediately apply a little solder to it in an even thin coating. This is called "tinning" the "iron". Or when a small hole is worn in the block, place a little solder in this hole or pocket and melt it with the "iron", while rubbing it in the solder and against the salammoniac at the same time.

Dipping the point of the hot soldering copper into the flux occasionally, helps to keep the tinning bright.

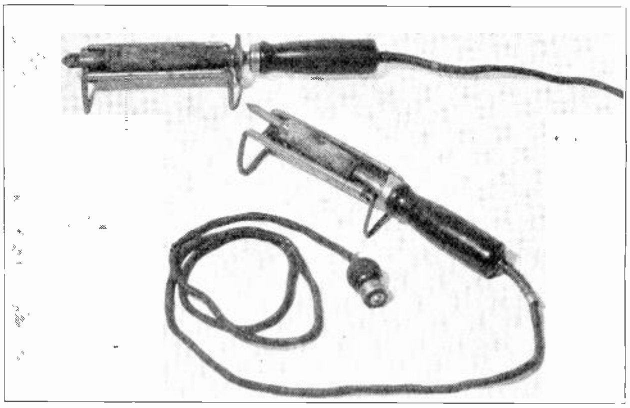

Fig. 22. Electric soldering irons are very convenient where electric current is already available.

25 SUFFICIENT HEAT IS IMPORTANT

Never try to solder a splice without a well tinned, well heated "iron" as it will only waste time and result in a poor job.

If the iron is not hot enough the solder will melt very slowly and become pasty, instead of flowing freely as it should. The iron should be hot enough so the solder will melt almost instantly when touched to its point.

When heating an iron with a blow torch or gas furnace, be sure the flame is blue and clean, otherwise it will blacken and dirty the iron.

26. SOLDER FOR ELECTRICAL USE

Solder as used for electrical work is usually made of about half lead and half tin. It can be bought in the form of long bars, solid wire solder, and "resin core" wire solder.

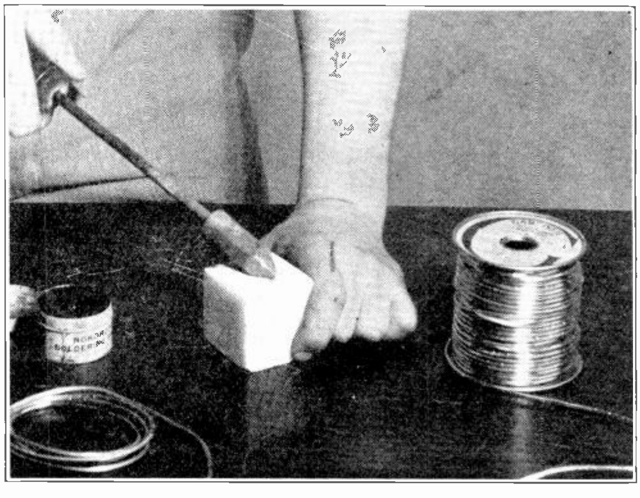

Fig. 23. This photo shows the method of cleaning and tinning a soldering copper with a block of salammoniac.

The wire solder is most commonly used for applying to small splices, and the bar solder for large cable splices and for melting in a solder pot.

The resin core solder is very convenient as the resin carried in the hollow wire acts as a flux, automatically applied as the solder is melted.

27. SOLDERING FLUX

Flux should always be used on any splice before applying the solder, as it dissolves the oxide on the metal and causes the solder to flow and unite with the metal much more readily.

Resin is a very good flux and can be used in bar form or powder, and melted on the hot splice. Muriatic acid was formerly used, and while it is a very active and effective flux, it should not be used on electrical work, as it causes corrosion of the wires later. No acid flux should be used on electrical splices.

Several kinds of good flux are prepared in paste form which is very convenient to apply.

These fluxes should be applied to the splice and melted on it with a good hot iron. Excessive flux should not be used, and none should be allowed to remain in the splice, as resin and some of the other fluxes act as insulators if they are not well melted out or "boiled out" of the solder with plenty of heat.

28. PROPER METHOD OF APPLYING SOLDER TO SPLICE

When the splice is "fluxed" the solder should be evenly applied and well melted so it runs into the crevices between the wires. It should not be dripped on the splice by melting it above with the iron. Instead the splice should be hot enough to melt the solder when it is rubbed on top of the turns.

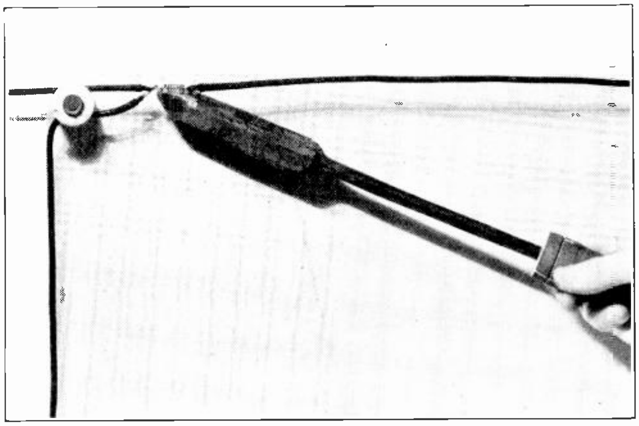

Fig. 24. Soldering copper should always be applied to the under side of the splice, as the splice can be heated much quicker in this manner. A drop of solder should be placed on the tip of the iron and pushed against the under side of the splice. This helps to conduct the heat into the splice very rapidly.

The proper place for the soldering copper is **underneath the splice,** as heat naturally goes up, and this will heat the splice much quicker. See Fig. 24.

Many beginners have a great deal of difficulty heating a medium sized splice before the copper becomes cold, because they do not understand the principle of **heat transfer** from the copper to the splice.

29. CONDUCTING THE HEAT TO THE SPLICE

Always remember that heat will travel or flow through metals much easier than through air, and while copper is an excellent conductor of heat, there is very little actual contact area between the soldering copper and the rounded turns of the splice.

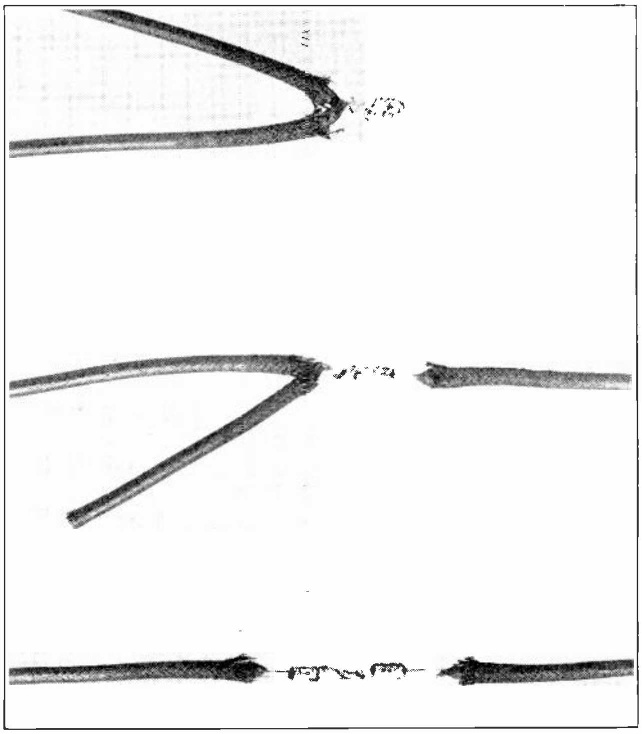

Fig. 24-B. The above three views show soldered splices of the Pigtail type and Western Union type. Note how the solder thoroughly covers and adheres to the entire splice.

Here is a simple little trick of the trade which, once you have tried it, you will never forget, and you will be surprised to see how much it speeds up any soldering job on a splice. Place the heated copper under the splice with one of the flat faces of the tip held fairly level and in contact with the turns of the splice. Then melt or "puddle" a little drop of solder on the copper, by pushing the solder wire in between the copper and the splice. This drop should melt almost instantly, and will provide a much greater area of metal-to-metal contact between the copper and the splice, and **the heat will flow into the splice many times faster,** heating it well in a very few seconds.

Then, while still keeping the good contact of the soldering copper on the bottom of the splice, run the solder on the top, allowing it to run down through the turns. Examine Fig. 24 again, and you will note the drop or puddle of solder on the iron, and the correct method of applying the solder to the splice.

Do not leave a large bulge of solder on any splice, but melt it off so that just a good coating remains on all turns.

Pigtail splices can be quickly and easily soldered by dipping them in a small ladle of molten solder.

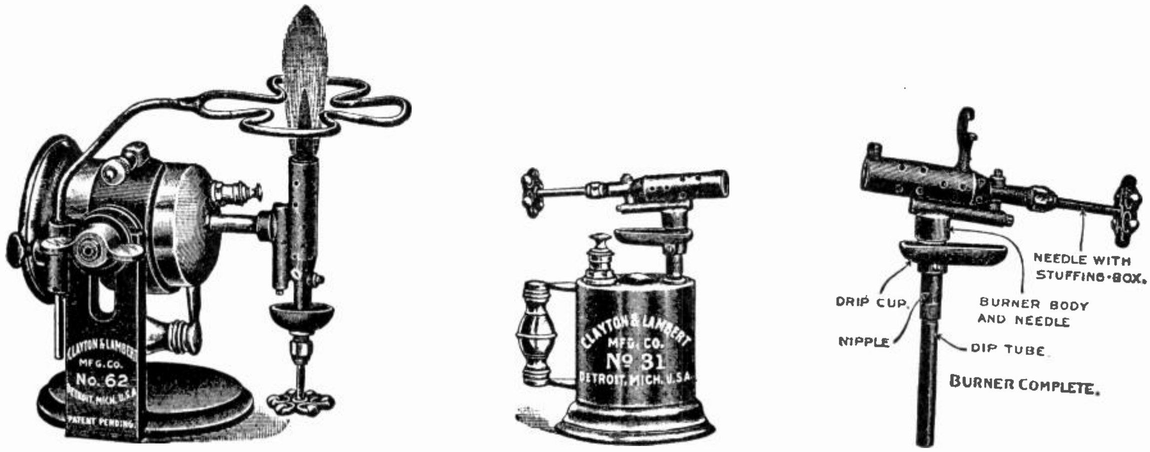

Fig. 25. This view shows the important parts of a blow torch on the right, and at the left the method of using a blow torch in a special stand for heating a lead melting pot.

Convenient small ladles or pots with long handles are made for this use.

30. SOLDERING LARGE SPLICES

When soldering cable splices, it is often difficult to get the entire splice hot enough before the soldering copper gets cold. The copper of the splice, also being a good conductor of heat, carries it away along the cable nearly as fast as the soldering copper can supply it.

For soldering the larger cable splices, a blow torch is used to heat them, or they are dipped in hot solder, or have the molten solder poured over them and the excess caught in a pan below the splice.

If the insulation near the splice gets too hot, it should be kept cool by wrapping a wet rag around it while soldering.

In using a blow torch care should be taken not to overheat or burn the copper strands, as it weakens them greatly, and also makes a poorer job of soldering.

31. BLOW TORCHES

Fig. 25 shows a common gasoline blow torch in the center view, and its burner and valve in a larger view at the right.

To start such a torch, a small amount of gasoline should be run into the drip cup and lighted with a match. This flame heats the burner nozzle directly above, and as soon as it is hot the valve can be opened allowing a fine jet of gasoline to spray into the nozzle, where it immediately vaporizes and burns with a clean blue flame of very high temperature.

If the flame is white and unsteady, the burner is not yet heated enough.

These torches have a small air pump built in the gasoline can, and the air pressure thus supplied forces the liquid up to the burner in a spray.

The valve is of the needle type and should not be closed too tightly or it will damage the needle and valve seat. After extinguishing the torch it is well to loosen the valve just a little so it will not stick when the metals become cold.

The left view in Fig. 25 shows a torch mounted in a bracket and stand for heating a lead pot.

Fig. 26 shows a regular gasoline lead pot, used for melting larger quantities of lead for large cable work.

32. CABLE LUGS

For attaching stranded cables to the terminals of machines or switchboards, and also for splicing where the splice may need to be disconnected occasionally, we use copper cable lugs as shown in Fig. 27.

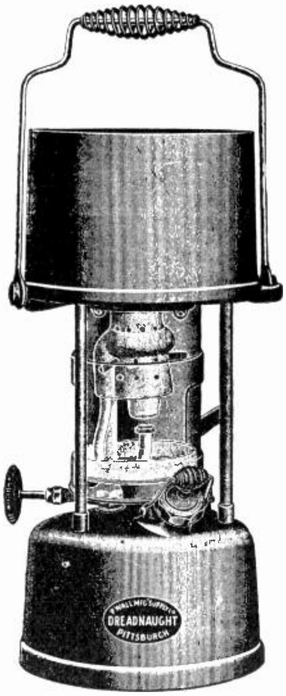

Fig. 26. Gasoline lead melting pot for use in soldering large cables, and cable sheaths.

These lugs are made in different shapes, and for single cables or a number of cables as shown. They have a hollow cup on one end for attaching to the cable, and the other end is flattened and has a hole through it, so it can be securely bolted to a terminal or another lug.

33. ATTACHING AND SOLDERING LUGS TO CABLE

To attach a lug to a cable, first strip just enough of the insulation from the end of the cable to allow the bare end to go fully down into the cup. Do not remove too much insulation, as it should cover the cable close to the end of the lug when it is attached.

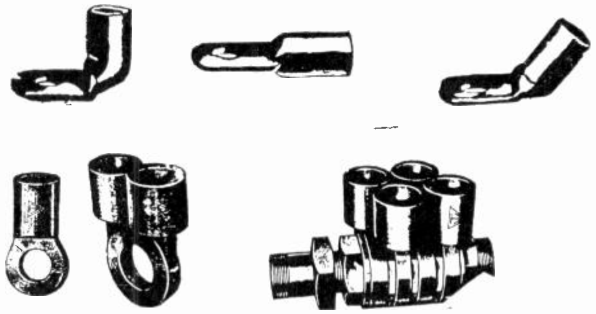

Fig. 27. Several types of soldering lugs used for connecting cable ends together or to the terminal of electrical equipment.

Clean the bared end well, and also **make sure the lug cup is clean.** Then **flux and tin** the cable tip and inside of the cup, and melt enough solder in the cup to half fill it. The lug can be held in the flame of a torch until hot and then melt the solder in it. Be careful not to burn your pliers when heating lugs, as it destroys the temper of the steel if the pliers are held in the edge of the flame. The lug can easily be held in the flame with a wire hook, and then taken in the pliers when heated and ready to melt the solder in it.

When the cup is heated and half full of molten solder, push the cable tip down in it, and hold it there while the lug can be cooled with a wet rag, causing the solder to harden quickly. Do not move the cable while the solder is hardening.

34. SOLDERLESS CONNECTORS

Solderless connectors such as shown in Figs. 28 and 29 are sometimes used for connecting cables. These devices have a sort of sleeve or clamp that is squeezed by the threaded nuts causing them to grip the cable very securely. These are much quicker to use and very good for temporary connections, but are not allowed for permanent connections in some places.

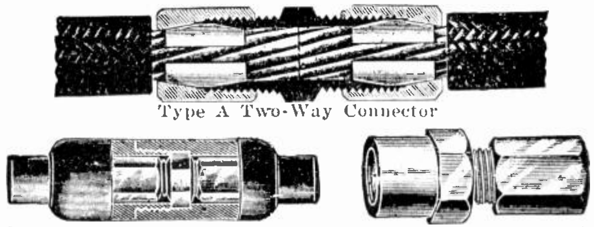

Type A Two-Way Connector

Insulated Two-Way Connector

Stud Connector Style F

Fig. 29. Several other types of solderless connectors, showing a sectional view of the upper one which illustrates the method in which it grips the cable.

Solderless connectors can also be obtained in several very good forms for smaller wires, and are great time savers on jobs where they can be used.

Another method of splicing solid wires is by the use of the tubes shown in Fig. 30. The wires are slipped into these tubes and then the whole thing twisted into a splice.

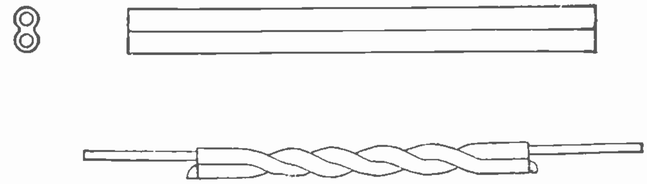

Fig. 30. Twin metal tubes of the above type are often used for splicing large solid conductors.

35. LEAD COVERED CABLE SPLICING

When splicing large lead sheath cables, the lead is split back from 10 to 36 inches according to the cable size, and a large lead sleeve slipped over one of the cable ends for use in covering the splice when it is finished. The one or more conductors in the cable are then spliced and taped.

If paper insulation is used on the conductors the moisture is boiled out of them by pouring hot molten paraffin over them. See Fig. 31.

When the splice in the conductors is finished the lead sleeve is slid over it, and its ends are joined to the cable sheath by pouring hot lead over them and "wiping" it on with a pad as it cools. This

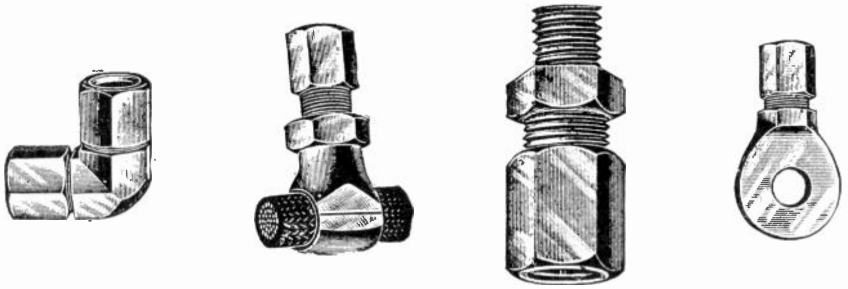

Fig. 28. Several styles of solderless connectors usde for splicing cables. These connectors grip the cable very securely when their nuts are tightened with a wrench.

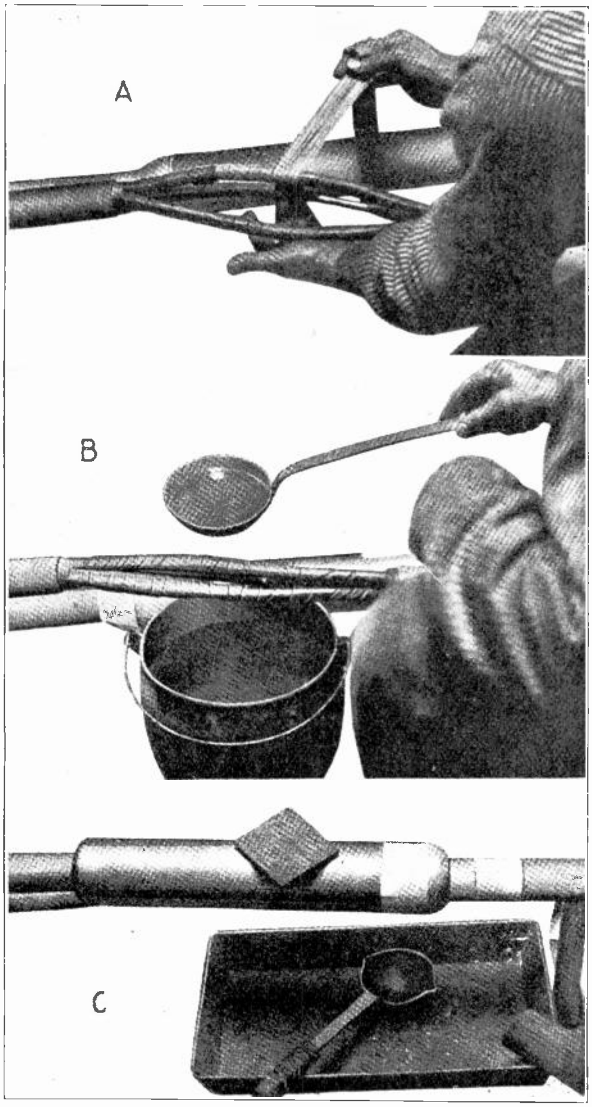

Fig. 31. This view shows several of the important steps in splicing lead covered cables.

is a very critical job and one that requires a lot of practice to get the lead on smoothly and obtain a tight junction, without melting the sheath. The whole joint is then poured full of hot paraffin or insulating compound, through a small drilled hole in the sleeve. Then this hole is plugged tight to exclude all air and moisture.

Fig. 32 shows some of the steps in making such a splice.

36. TAPING OF SPLICES

All splices on wires with ordinary rubber and braid insulation should be taped carefully to provide the same quality of insulation over the splice as over the rest of the wires.

Two kinds of tape are used for this, one a soft gum **Rubber Tape,** and the other known as **Friction Tape,** which consists of cloth filled with sticky insulating compound.

The rubber tape is applied to the splice first to provide air and moisture tight insulation of high dielectric strength, and equal to the rubber which was removed. The friction tape is then wrapped over the rubber tape to provide mechanical protection similar to that of the braid which was removed.

In applying rubber tape, cut from 2 to 4 inches from the roll and peel off the cloth or paper strip which separates it in the roll. Then start the end of this strip at one end of the splice, tight to, or slightly overlapping, the rubber on the wires. Stretch it slightly while winding it on spirally. Press or pinch the end down tightly onto the last turn to make it stick in place. See Fig. 33.

A short time after this tape is applied, it becomes very tightly stuck together in almost a continuous mass, so it cannot be unwound, but would need to be cut or torn off. This is ideal for proper insulation.

The friction tape is "peeled" from the roll and applied in a spiral winding of two or more layers.

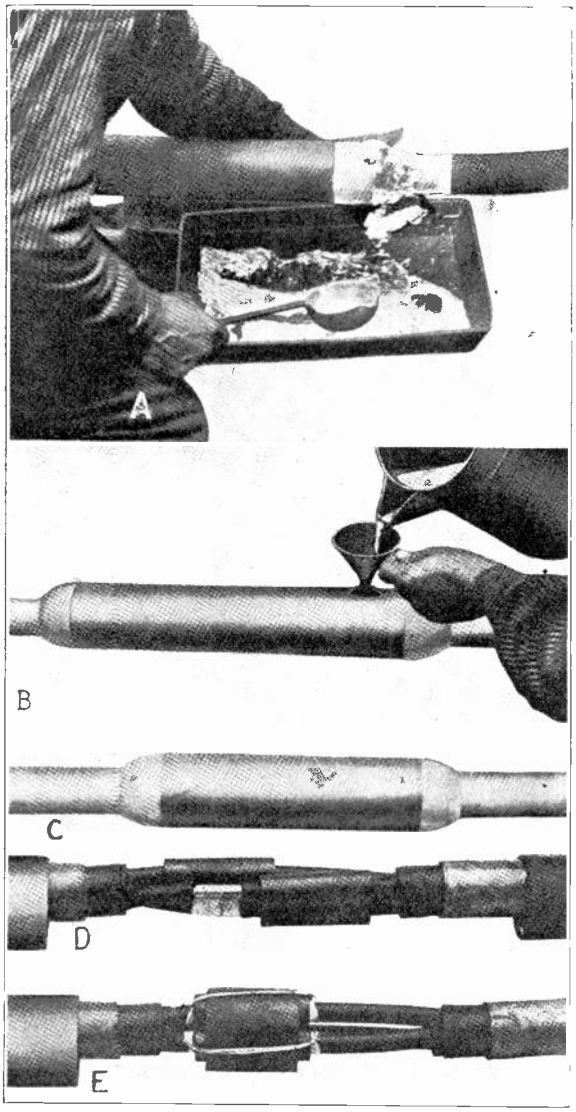

Fig. 32. "A" shows method of "wiping" the joint between the sleeve and sheath of a lead covered cable. "B", Pouring the finished splice full of hot insulating compound. "C", Finished splice with sleeve in place. "D" and "E", Small inner sleeves of insulating material are often used to separately insulate the several conductors.

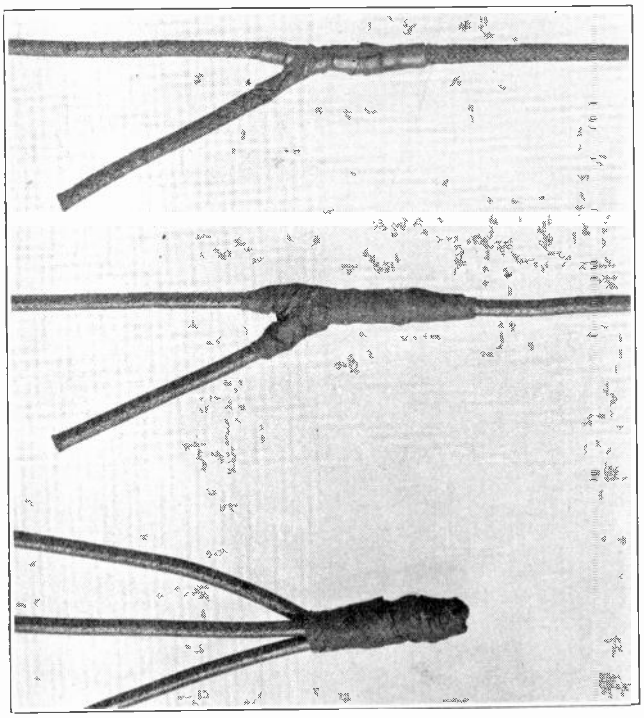

Fig. 33. The upper view shows a "tap" splice covered with rubber tape. The center and lower views show "tap" and "pigtail" splices completely taped with both rubber and friction tape.

Each turn should lap well over the preceding one. Sometimes where one has working room to allow it, the friction tape can be started on the splice without tearing it from the roll, and the roll then passed around the wire, allowing the tape needed to unwind as it is wrapped on the splice.

Friction tape can be torn off the roll, or it can be split in narrower strips by simply tearing it.

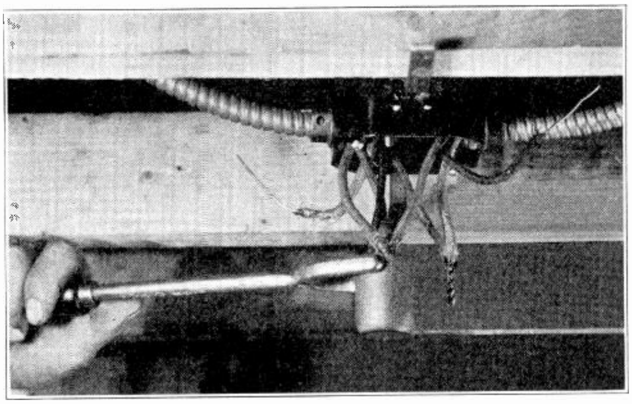

Fig. 34. Pigtail splices can be quickly and conveniently soldered by dipping in molten solder as shown.

TYPES OF WIRING SYSTEMS

While we have found that the conductors for light and power wiring have good insulation on them, we can also see that this insulation is not sufficient to protect the wires from the mechanical injury and damage they would receive if they were just run loosely and carelessly about the buildings.

For this reason and also for the sake of appearance, all wiring must be run on proper supports, and with proper additional protection to its insulation where necessary. It should be located where it cannot be bumped with moving objects, and out of the way as much as possible.

In addition to the several general classes of wiring systems we have already mentioned, this work is also divided into several types of systems according to the method of installation, and kind of materials used.

Two general divisions are: **Open or Exposed Wiring**, and **Concealed Wiring.**

In open wiring systems the wires are run on the surfaces of the walls, ceilings, columns and partitions, where they are in view and readily accessible.

Concealed wiring systems have all wires run inside of walls and partitions, and within the ceilings and floors, where they are out of view and not easily reached.

Open wiring is often used in mills, factories, warehouses, and old buildings, where appearance is not important, and where it may often be desirable to make changes in the wiring. One of its advantages is that it is always easy to inspect or repair.

Concealed wiring is generally used in all new buildings for homes, offices, stores, etc.; and also for many modern factories. It is much to be preferred where good appearance is important.

Another way of dividing wiring systems is based on whether the wires are run in metal or not.

NON-METAL SYSTEMS

1. **Knob and Tube Work**, where the wires are supported by porcelain knobs and tubes. This system may be either open or concealed, and is a very low cost system.

2. **Cleat Work**, where wires are supported by cleats and knobs. This system is also very low in cost but cannot be concealed.

3. **Non-Metallic Sheathed Cable.** This is one of the latest systems to be permitted by the Code, is reasonable in cost, very convenient to install, and can be run concealed or open.

4. **Wood Moulding**, where wires are run in grooves in wood strips. This is a very old system and is rapidly becoming obsolete.

METAL SYSTEMS

5. **Rigid Conduit.** Wires are run in iron pipes. This system is somewhat higher in cost, but is considered the best of all systems, and can be either open or concealed.

6. **Flexible Conduit.** Wires are run in flexible steel tubes. A very reliable system and very convenient to install in certain places. Can be either concealed or open work.

Both of the above are considered as one system by the National Code.

7. **Electrical Metallic Tubing.** Wires run in steel tubes, lighter in weight than regular conduit, and equipped with special threadless fittings. A very good system, and very convenient to install, but has certain code restrictions. Can be used only for open work.

8. **Armored Cable (B. X.).** Wires are encased permanently in a flexible steel casing at the factory, and bought this way. A very reliable system and very convenient to install. May be run either open or concealed.

9. **Surface Metal Raceways.** (Often called metal moulding.) Wires are run in thin flat or oval metal tubes, or split casings. Low in cost, but can only be used for open work.

10. **Underfloor Raceways.** Wires run in metal casings or ducts under floors. Used in factories and offices, but under certain Code restrictions.

This list of the various types of wiring systems will also give you a good general idea of their applications and the materials used. We will now cover each system in detail, with its materials, advantages, and methods of installation.

37. KNOB AND TUBE WIRING

The Knob and Tube system is one of the oldest and simplest forms of wiring, and while not as reliable as conduit, it is allowed by the National Code, and is still used to some extent in small towns and rural homes. If carefully installed it will give very good service and at very low cost of installation.

The principal materials required for a wiring job of this type, are the **Porcelain Knobs, Porcelain Tubes**, and flexible non-metallic tubing known as **"Loom"**.

The knobs are used to support the wires along surfaces or joists of the building. The tubes are to protect the wires where they run through holes in joists or walls, and the loom to protect the wires through holes, or where they enter outlet boxes or run close together.

38. KNOBS

Fig. 35 shows an excellent view of a split knob of the type commonly used, and also a porcelain tube in the lower view.

You will note that the knob has grooves on each side, with ridges in them to grip the insulation on the wire. The wire can be run in either groove, but do not run two wires of opposite polarity on one knob.

The nail has a leather washer under its head to prevent splitting the knob caps when driving it tight. Care should be used, however, as it is possible to split the knob cap if it is tightened too much.

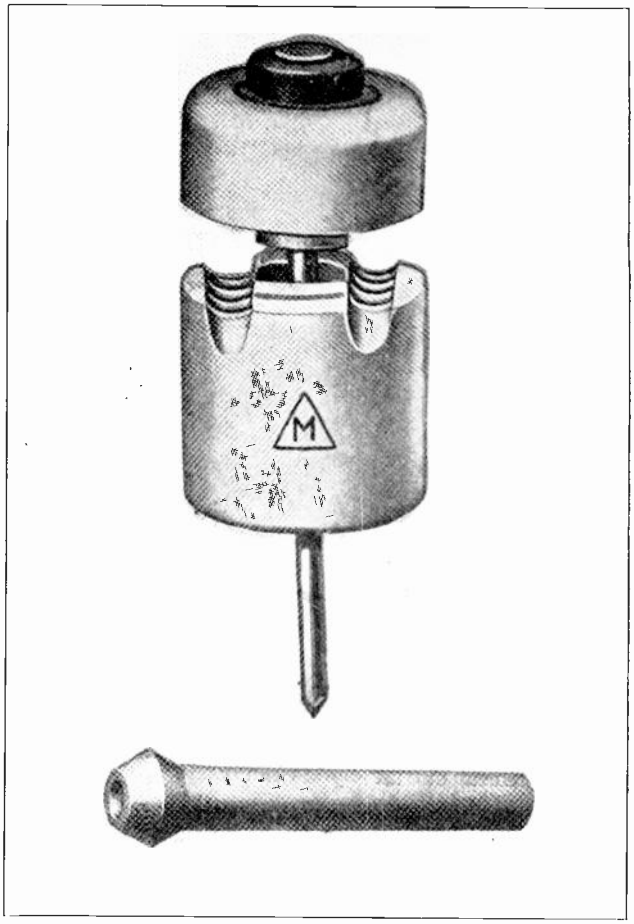

Fig. 35. The upper view shows a common type of split knob with the nail and leather washers which are used with them. Below is a porcelain tube of the type used in Knob and Tube wiring.

Knobs should be placed along the wire not farther than 4½ feet apart, and in some cases should be more frequent to provide proper support.

Before tightening the knobs, the wires should be drawn up tight so they will not sag and touch the wood, or present a bad apearance.

Wires of opposite polarity supported on knobs, must be spaced five inches or more apart.

Knobs can be used to support either horizontal or vertical wires, as long as the wires are drawn up tight.

Fig. 36 shows several styles and sizes of knobs, and also some porcelain cleats, and both a solid and a split porcelain tube.

The one piece knobs with the grooves around them must have the wires tied to them with a short piece of wire of the same size and insulation as the running wire.

Knobs must hold the wires at least an inch away from the surface wired over.

Sometimes knobs are fastened with screws instead of nails, and the ordinary split knob, such as shown in Fig. 35. would require 2½" or 3" No. 10 flat head wood screws.

39. TUBES

Wherever the wires are to run through holes in joists or walls, the porcelain tubes must be used to prevent damage to the insulation by rubbing or vibration.

The standard tube is 3″ in length and about ⅝″ in diameter and has a bulge or head on one end. Where the tube must run at a slant, the head should always be placed upwards to prevent the tube from dropping out of the hole. An exception to this is where wires enter an outlet box and the tube is held in place by the wire being bent back toward the nearest knob. The head should then be on the end which will prevent the angle of the wire from pushing it out of the hole.

Either a ⅝″ or 11/16″ wood bit can be used for boring the holes for standard porcelain tubes, and it is well to bore them with a little slant so the tubes will not tend to work out of the holes.

Other tubes can be obtained, both longer and larger than the common 3″ size.

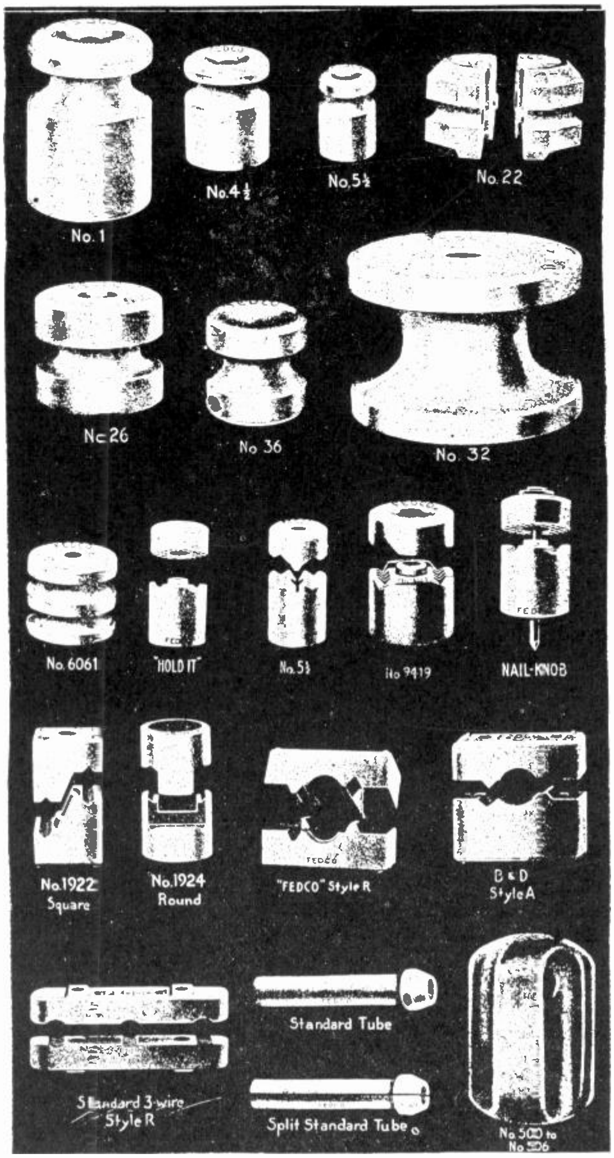

Fig. 36. Several different types of solid and split knobs, cleats and tubes.

40. LOOM

Fig. 37 shows a piece of the flexible "loom", and Fig. 38 shows a larger view of a small piece, in which you can see the inside construction of this woven insulation.

Fig. 37. A piece of "loom" or flexible insulation used to protect wires in certain places in Knob and Tube wiring.

Wherever wires enter an outlet box for a switch or lamp, a piece of loom must cover the wires from within the outlet box to the nearest knob outside the box. Fig. 39 shows a metal clamp used for fastening the end of the loom into the box. This clamp grips the loom with small teeth and wedges it tightly in the hole to prevent it from ever slipping out.

Where wires must be closer than 5 inches apart or where they must be run inside a wall, ceiling, or floor, for more than four and a half feet without knobs, they must be completely covered with loom. By protecting the wires in this manner they can be fished through difficult places in old house wiring, where knobs cannot be placed.

Fig. 38. Enlarged view showing the fabric and construction of a piece of "loom".

Some electricians occasionally try to cheat the Code and the customer by placing short pieces of loom only at each end of such a wire run, and not clear through. But when caught by a careful inspector, or when it causes a fire, such work as this costs the electrician far more than the extra loom for a good job would have cost.

In some places even in new house wiring it may be desired to run five or six wires or more between the same two joists. This cannot be done with knobs and still keep them all five inches apart. It can be done, however, by covering the wires with loom and running them all between two joists, or by grouping them all on one joist under loom straps if desired.

Where one wire crosses another, or crosses a pipe of any kind, if it cannot be supported well away by a knob, a porcelain tube or piece of loom five or six inches long can be slid on the wire and taped in place at its ends, to hold it directly over the wire or pipe to be crossed.

Wherever wires are attached to switches or enter outlet boxes, or where a tap is taken from a wire, a knob should be located close to this point to take all possible strain off from the splice or switch, or edge of the outlet box. See Fig. 40-A, which shows how a knob can be used both to support the running wire and to secure the tap wire and keep any strain off the splice.

Fig. 40-B shows how an extra knob should be placed near the point where a splice is made to a running wire which is not supported at this point by a knob.

Fig. 41 shows a section of a knob and tube wiring system in which you can observe a number of the parts and methods which we have mentioned for this type of work.

Examine this photo closely and note the important points shown.

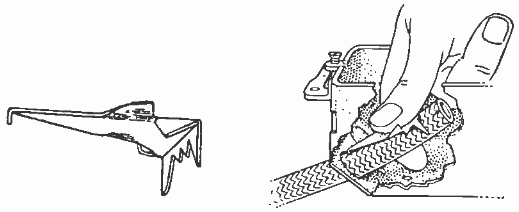

The Clip

Placing Clip in Box

Fig. 39. "Loom" can be fastened securely in the outlet box with clips as shown above.

41. RUNNING THE WIRES

When wiring a new building with a knob and tube system, it is quite easy to install the wiring between the joists in walls and ceilings before the lath and plaster are put on.

The wires should be run for the mains and branch circuits, and the outlet boxes for switches and lights should be installed. The boxes should be set so their edges will be about flush with the plaster surface, or a little beneath it. They should not be "recessed" or set in, more than ¼ inch at the most. These outlet boxes will be explained later.

When running wires in old buildings, advantage can usually be taken of unused attics or basement ceilings, making it quite simple to run the wires in these places. Where the wires are likely to be disturbed or injured, if run on protruding knobs, it is well to protect them by running a board along them, or by running the wires through the joists in tubes.

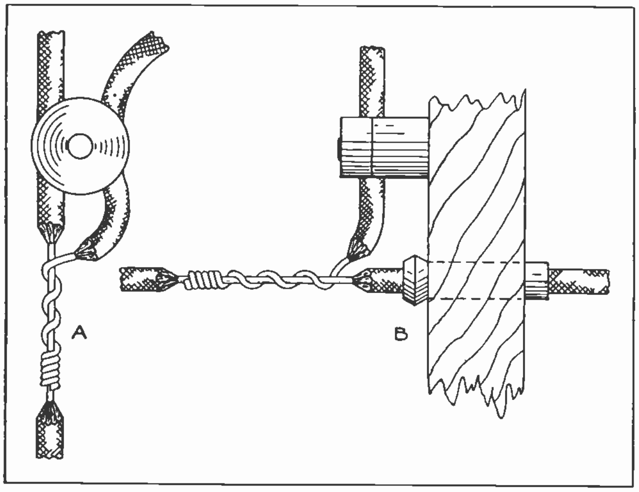

Fig. 40-A. Sketch showing a Knob used both to support the "running" wire and to keep the "tap" wire from putting any strain on the splice.

Fig. 40-B. When no Knob is near on the "running" wire an extra one should be placed on the "tap" wire close to the splice in the manner here shown.

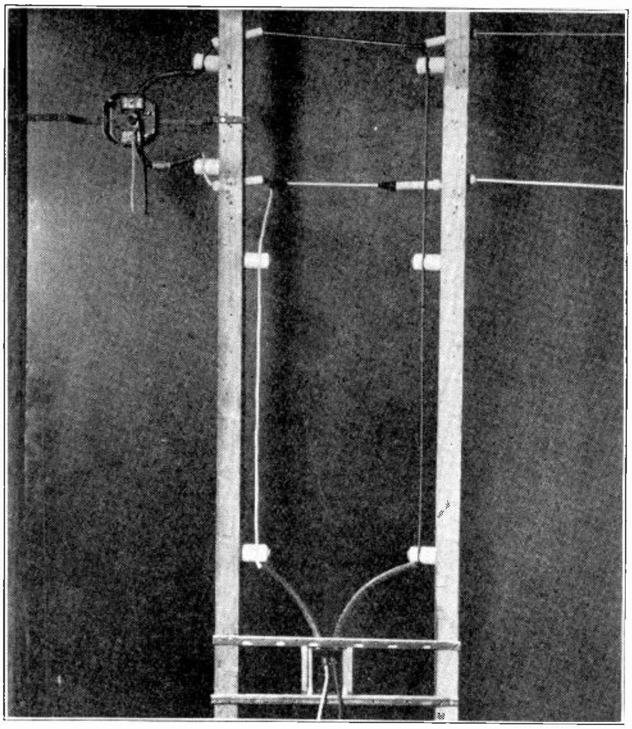

Fig. 41. This photo shows several of the most important features in a Knob and Tube wiring system. Note particularly the manner in which the "loom" extends from the outlet box, the use of the porcelain tube where the wires cross, and position of tubes in the joists when they are near to knobs as shown.

Where the wires are run through walls to switch boxes or wall light outlets, they can usually be pushed up or dropped down between the vertical joists and pulled out through the outlet opening.

A "mouse" and string, as formerly described in the section on signal wiring, can be used to good advantage to pull the wires through vertical walls.

Where they must be run horizontally through hollow floors or ceilings, a steel fish tape can be pushed through first, and used to pull in the wires. These fish tapes are long, thin, flat pieces of springy steel and obtainable in different sizes and lengths. They can be pushed and wiggled quite a distance through spaces between joists, and even around corners and obstructions to quite an extent. They are also used for pulling wires in conduit, as will be explained later.

Fig. 42 shows a piece of fish tape rolled in a coil for convenient carrying.

An ordinary jointed steel fishing rod, or a long thin stick with an eye in the end, can often be used very well to push wires into difficult places, or to push a string through and use it to pull the wires in with.

42. OUTLET BOXES

Where wires are attached to switches or fixtures, proper outlet boxes should be used. Fig. 43 shows a common type of outlet box for use with switches or convenience outlet receptacles. This box is made of thin steel and in sections, so it can be made wider to hold several switches or receptacles if desired.

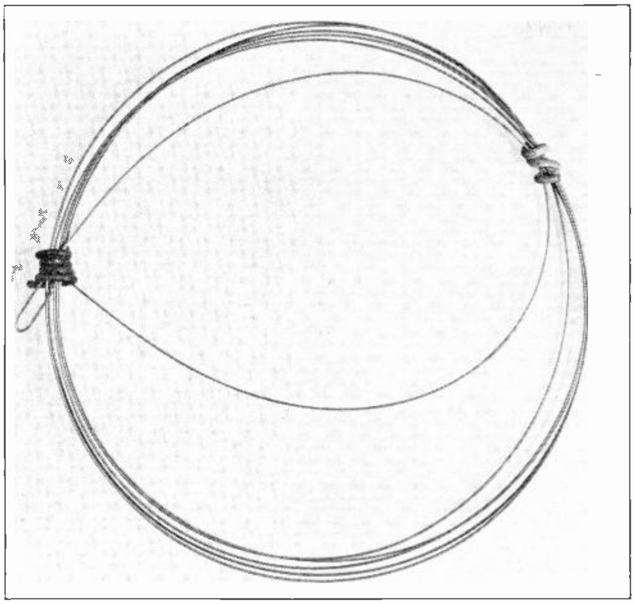

Fig. 42. A coil of steel fish tape, such as used for pulling wires into difficult places in a building, or through conduit.

The small detachable "ears" on each outer end are to fasten the box to the lath or wall, and they are adjustable so the box can be set out farther by merely loosening the screws in the "ear". These boxes have "knockout" pieces or round sections cut nearly through the metal, so they can be punched or knocked out with a hammer. These openings are for the loom and wires to enter the box for connecting the switch.

Such outlet boxes provide a rigid support for the switches or receptacles, and a protection around the back of the devices where the wires are connected.

The center and lower views in Fig. 43 show a clamping plate and screw inside the box with special shaped notches for gripping the loom or flexible conductor sheath where it enters. Note that the notches in this plate come directly over two knockout slugs.

Outlet or knockout boxes of this type can be obtained with the small knockouts to fit loom, or with larger ones for conduit, but the boxes are standard size to fit all push button or lever switches.

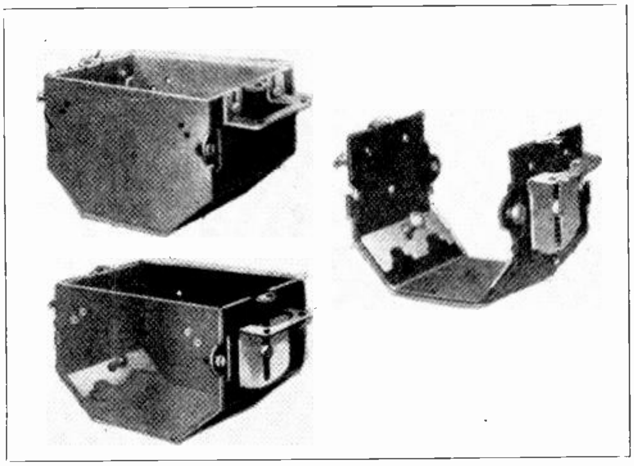

Fig. 43. Several views of a sectional outlet box of the type used for mounting switches and receptacles.

Fig. 44 shows a double outlet box for two switches or receptacles. The screws in the small "lips" at the center of each end are for fastening the switches or receptacles in the box.

Fig. 45 shows a type of ceiling outlet box, used to attach wires to lighting fixtures, and also to support the fixture. Deeper boxes of this type are often used for ceiling outlets.

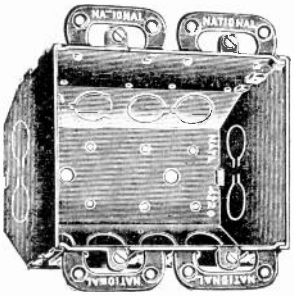

Fig. 44. Double outlet box for mounting two switches, two receptacles, or a switch and receptacle.

Fig. 46 shows some of the various types of outlet boxes and covers available. You will note that some of these have both small and large knockouts, so they can be used either with loom and knob and tube wiring, or with conduit.

Fig. 47 shows an outlet box with bar hanger used to support it between joists, and you can also note the fixture stud in the center of the box for attaching a lighting fixture. This box also contains two new style loom clamps.

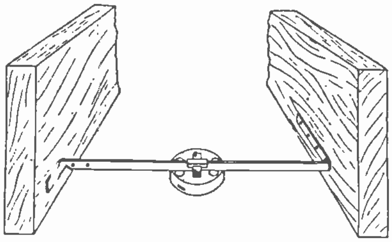

Fig. 45. A metal bar or hanger is used to support outlet boxes between the joists.

Fig. 48 shows how large solid knobs are often mounted on racks to support various numbers of power cables.

43. CLEAT WORK

In cleat wiring systems the wires are run in pairs and supported in grooves in the ends of porcelain cleats such as shown in Fig. 49. This view shows a two-wire cleat, but they are also made for three wires.

These cleats are fastened to the walls or ceilings with two screws through the holes shown. They must support the wires at least ½" from the surface wired over, and keep them at least 2½" apart.

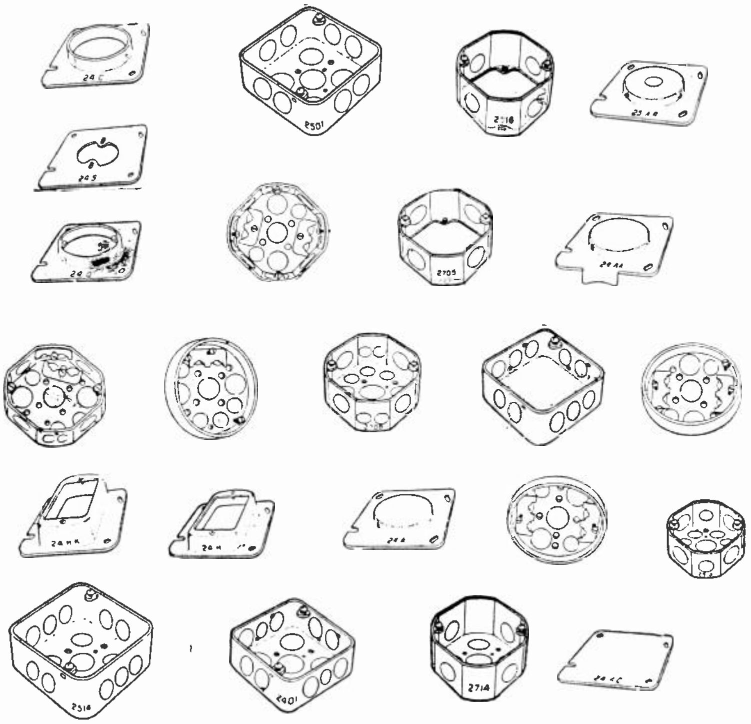

Fig. 46. Several types of outlet boxes and covers. Note the arrangement and size of the "knock-out" openings.

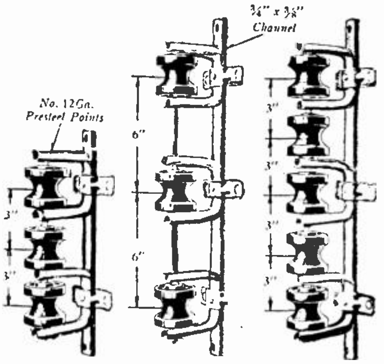

Fig. 48. Large solid knobs on special brackets of the type shown above are often used to support runs of several large wires or cables. Open wiring systems in factories and industrial plants often make use of knobs or cable racks of this type. They are very convenient to install, and the knobs can be removed by withdrawing the rod which runs through them, thus making it easy to place the wires on the inside of the knobs if desired, or in other cases they are tied to the outside of the groove with a tie wire.

Cleats should not be placed farther apart than 4½ feet along the wires, and in many places should be closer.

Cleat wiring may be used as part of a knob and tube or other system, but must always be run exposed.

Tubes or loom must also be used where the wires pass through walls or partitions.

44. CLEAT FITTINGS

To attach fixtures to a cleat wiring system we can use an outlet box that fastens to the ceiling or wall with screws and is covered by the canopy of the fixture. Loom must be used where the wires enter the box.

For installing plain lamps with reflectors only, cleat receptacles or rosettes, such as shown in Fig. 49-B. are used. The two in the upper row are to be mounted on the same surface the cleats are on, and the wires should be attached directly to the terminals of the receptacles. Lamp bulbs can be screwed into the openings shown. The two in the center row are called "rosettes" and are used to suspend lamps on drop cords. The two below are other types of drop cord rosettes, and the one at the left can be used either with cleat or moulding work.

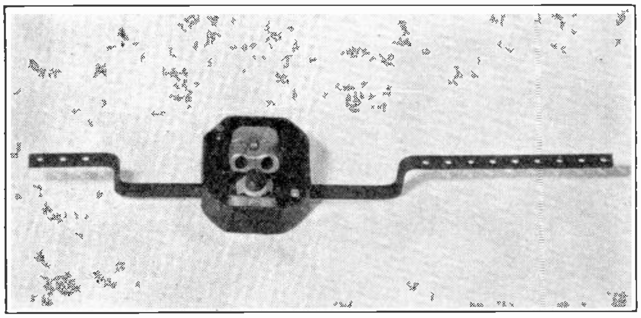

Fig. 47. This photo shows the inside of a common outlet box with fixture stud and "loom" clamps in place, and also the bar used for mounting the box.

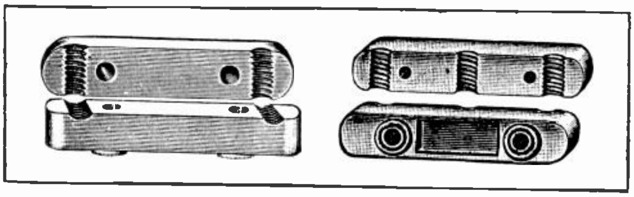

Fig. 49. Porcelain cleats of the type used for holding two or three wires in cleat wiring systems.

Surface type snap switches are generally used in cleat work, and a porcelain **Switch Back** is used to hold the switch base and wires ½ inch away from the mounting surface.

The same general rules are followed in cleat work, as were given in knob and tube work, for protecting wires where they may cross pipes or each other. We should also use cleats near splices or connections to devices, as we do with knobs, to remove any possible strain from the splices.

45. NON-METALLIC SHEATHED CABLE

This is one of the newer systems of wiring, and consists of wires encased in a covering of protective fabric. Fig. 50 is a sketch of a piece of this cable of the two-wire type, and shows the extra insulation

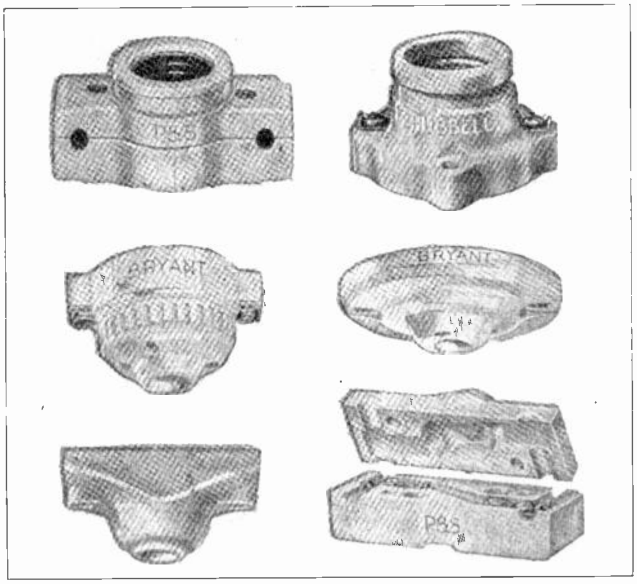

Fig. 49-B. Several types of porcelain receptacles used for attaching lamps or drop cords to a cleat wiring system.

on the wires as well as the outer covering, which is somewhat similar to loom.

This material is very commonly known as "Romex", and can be obtained in either two-wire or three-wire cables. Fig. 51 shows a piece of each kind, and the method of fastening them to the walls or partitions with metal straps.

This type of cable is very flexible and very easy to install and, as before mentioned, it can be run either exposed or concealed. In concealed wiring it can be run between joists or through holes without any additional protection, and simply fastened in place by the small metal straps, such as shown in Fig. 51.

46. INSTALLING ROMEX

These straps must not be spaced farther apart than three feet, and the cable should always be run tight to some supporting surface such as along a joist, wall, or ceiling. When run across joists or open spaces it should be supported by a board. When it is being run concealed in new buildings the straps can be placed 4½ feet apart, and in old buildings, where it is impractical to support the cable with straps, it can be fished from one outlet to another, similarly to wires covered with loom.

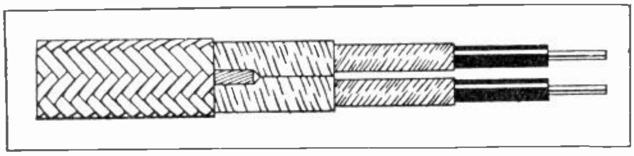

Fig. 50. This sketch shows the construction of a piece of non-metallic sheathed cable or "RomeX". Note the heavy layers of extra insulation on the wires, and also the strong outer braid covering.

Even though the original cost of this material is somewhat higher than that of the same number of feet of wire with knobs and tubes, the ease with which it can be installed makes the finished system very reasonable in cost.

In making bends in such cable runs it should be carefully done so as not to injure the covering and insulation of the cable, and the bends should have a radius of not less than five times the diameter of the cable.

Regular outlet boxes of the type already covered are used where switches and fixtures are to be installed. All cable runs must be continuous and without splices from one outlet box to the next.

Where the cable comes through the floor, or is run along a partition within six inches of a floor, it should be protected by running it through rigid conduit or pipe.

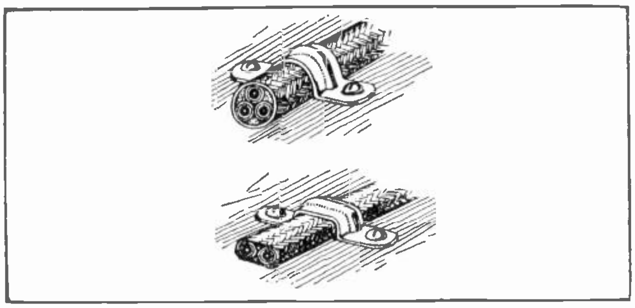

Fig. 51. This view shows a piece of three-wire and one of two-wire non-metallic sheathed cable, and also the method of attaching this cable to a surface with metal straps and screws.

47. GROUND WIRES AND FITTINGS

The newest form of this sheathed cable has a bare copper wire run under the outer covering, parallel to the insulated wires. This wire is used for grounding the various outlet boxes and fixtures, and it should be securely grounded at the service switch, or entrance to the building.

Fig. 52 shows several methods of attaching the

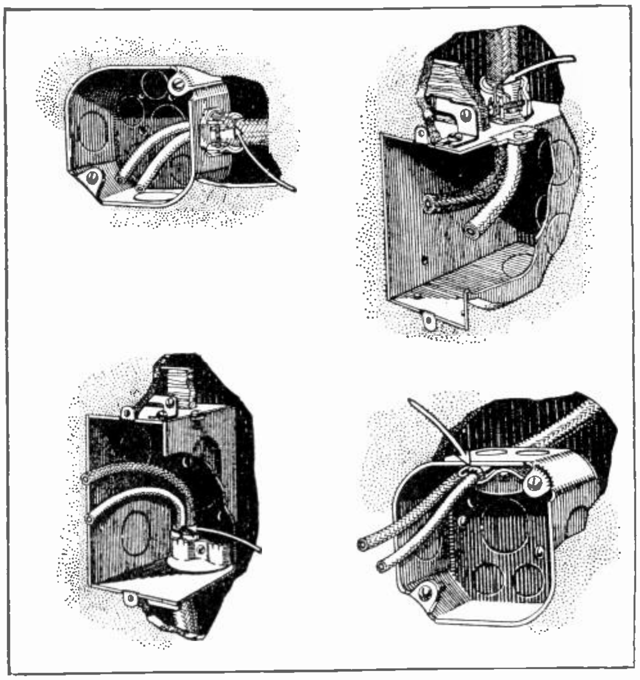

Fig. 52. The four views above show methods of attaching RomeX to outlet boxes with special clamps for this purpose. Note the ends of the wires, which are stripped back to allow the splicing or connection.

cable to common outlet boxes. The two upper views show the use of a "squeeze" clamp, which is attached to the outlet box with a lock-nut, and into which the cable is inserted and then gripped by tightening the screw of this clamp. The two lower views show another type of clamp similar to those used for fastening loom.

The ground wires should be stripped back six or eight inches through the outer covering of the cable to allow the wires to be stripped for connections in the box, and then this ground wire is attached to the cable clamp, as in Fig. 53, thus effectively grounding the outlet box. The ground wire must not in any case be left inside the box.

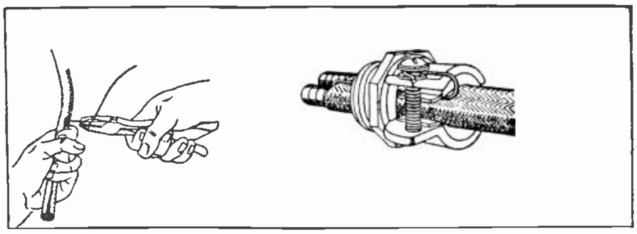

Fig. 53. This sketch shows the method of stripping back the extra ground wire in non-metallic sheathed cable, and also the manner in which it is attached to the outlet box clamp.

Fig. 54 shows a method of installing non-metallic cable in the joists of a new house, and Fig. 55 shows how it can be installed in the attic of either a new or old building.

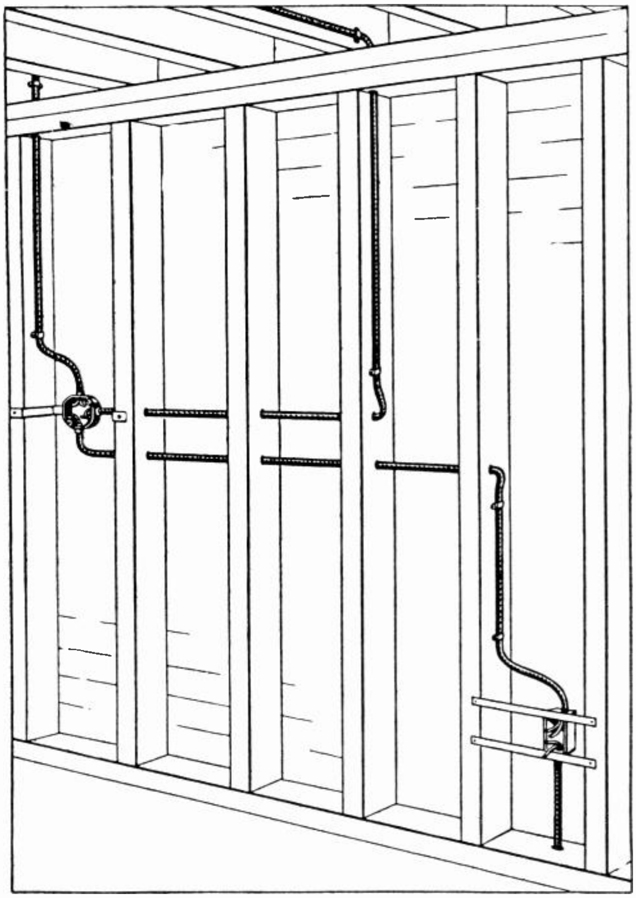

Fig. 54. A section of an installation of RomeX, showing how it is run through and along joists of a building.

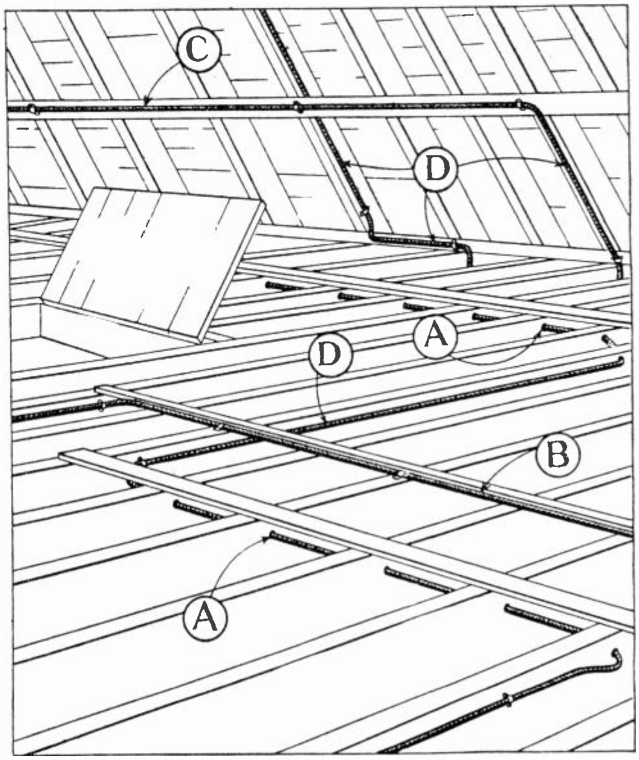

Fig. 55. RomeX is a very convenient type of wiring to install in the attics and walls of finished buildings.

In general, the installation of non-metallic cable is very similar to that of armored cable, or B.X., which is covered in a later section.

48. WOOD MOULDING

As previously mentioned, this system of wiring is not used much any more, but you will probably still find some installations of it, where an extension in the same type of wiring might be desired. Even then, it would probably be better to install metal moulding or raceway, unless the other system had to be matched exactly.

Fig. 56 shows a sketch of a piece of this moulding, and the manner in which the wires are run in the grooves, and the wood cap placed over them.

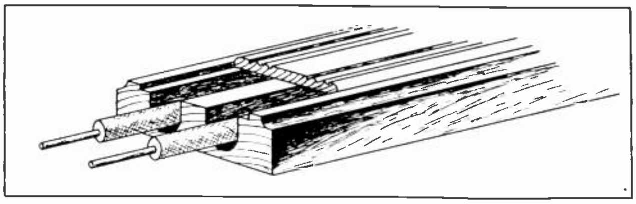

Fig. 56. A piece of wood moulding of the type sometimes used in making additions to old systems of this type.

Where switches or fixtures are installed with this type of system, the moulding is either cut to allow the mounting of a special porcelain block or fitting to which the wires are attached, or in some cases direct to the switches, which can be mounted flush with the surface of the moulding. A special fitting is also required where tap splices are made to running wires.

We would not advise using this type of wiring in any case, except where absolutely necessary to match some existing system. So it is not advisable to spend very much space or time on it here. In many old systems of this type the wiring can be made a great deal safer and more dependable if it is entirely removed and replaced with a more modern system.

RIGID CONDUIT WIRING

While this system is a little more expensive to install, it is usually by far the safest and most satisfactory type of wiring, and in this system the wiring is enclosed throughout in rigid steel pipe, which can be run either exposed or concealed in wood building partitions, or even embedded in the concrete or masonry of modern fire-proof buildings.

Concealed conduit must, of course, be installed in either frame or masonry buildings while they are being erected, although short runs may be worked in, in certain places in a finished building. When it is installed in finished buildings the system is usually exposed, however.

49. ADVANTAGES OF CONDUIT WIRING.

With the conduit system grounded as required by Code rules, there is practically no chance of fire or personal injury, due to any defects in the wire or insulation, because in such cases the wire becomes grounded to the pipe, and will immediately blow the fuse and open the circuit as soon as the fault occurs. In case of any momentary grounds or short circuits in such systems, the fact that the wires are enclosed in metal pipe makes it almost impossible to start any fires.

Some of the general advantages of conduit wiring are as follows:

1. The wiring is much more compact, and takes up less space than when strung out on knobs.
2. The grounded metal conduit shields the conductors magnetically, and prevents them from setting up external magnetic and electro-static fields that would otherwise interfere with telephones or radio equipment.
3. Conduit forms an absolutely rigid support for the wires without placing any strain on them, and also affords excellent protection from any mechanical damage or injury to the conductors.
4. It provides a very convenient method of grounding the circuit at any desired point.
5. It is suitable for both low voltage and high voltage wiring, depending upon the insulation of the wires or cable used; while the other systems mentioned can be used only for voltages under 600, and several of them under 300.

In addition to the above advantages, rigid conduit can be made absolutely water-proof, and is, therefore, suitable for wiring in damp locations.

In wiring new homes the slight extra cost is well worth while, because a conduit system will certainly be the most dependable and permanently satisfactory one obtainable. Many of the larger cities require that all new homes have conduit wiring installed. Practically all modern apartment buildings, offices, hotels, and department stores use conduit wiring exclusively, and industrial plants and buildings of fire-proof construction use it very generally. Many towns require the use of conduit for the entrance of service wires to the buildings, even though the building itself may use some other form of wiring.

Conduit pipe is very much like ordinary gas or water pipe in general appearance, except that it is somewhat softer, so it can be more easily bent for making turns and offsets in the runs.

Fig. 57 shows a piece of rigid conduit, and a sectional view of the end, as well as the threads on the right hand end.

Fig. 57. Piece of rigid conduit or pipe, in which wires are run in conduit systems.

Conduit is made in standard sizes from ½-inch to 6-inch inside diameter. These standard sizes are ½-inch, ¾-inch, 1-inch, 1¼-inch, 1½-inch, 2-inch, 2½-inch, 3-inch, 4-inch, 4½-inch, 5-inch, and 6-inch. These dimensions are approximately the actual inside diameter, usually being a little larger in each case. The ½-inch size is the one most commonly used for ordinary house wiring, and ¾-inch is used on some of the main runs.

The inside surface of conduit piping is smoothed by the manufacturers, so it will have no rough spots that might cut or damage the insulation on the wires. It is also enameled to prevent rusting. The outside surface is usually coated with waterproof enamel, or galvanized. One process for treating both inside and outside is called "Sherardizing", and is a process whereby zinc is applied to the surface while hot, in such a manner that it actually alloys with the pipe.

50. CONDUIT FITTINGS AND METHODS OF INSTALLING

Conduit is made in ten-foot lengths for convenient handling and installation. Where longer runs are required between outlets, it is necessary to couple the ends of the pipe together by threading them with a die, and using a pipe coupling. Such joints should be thoroughly tightened to make them water-tight and to provide a good electrical circuit, as the Code requires that the entire conduit system be continuous, for the purpose of having a complete ground circuit.

Fig. 58 shows the method of using a die to thread the end of a piece of conduit, and the proper position to hold the die stock handles.

Fig. 59 shows a sketch of a pipe coupling at the left as it would be used to attach two straight lengths of conduit together. The view at the right shows a coupling used with a nipple to attach runs of conduit to an outlet box.

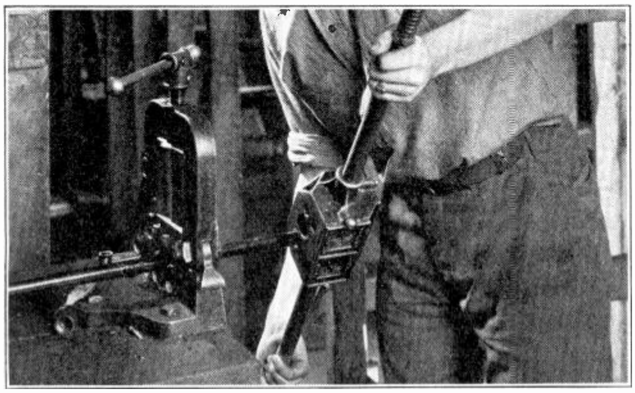

Fig. 58. Threading the ends of rigid conduit. Note the method of holding and operating the die.

Standard outlet boxes of the type already shown and described, and with knockouts of the proper size, are used with conduit systems.

The common method of attaching the conduit to the outlet box is to thread the pipe end and screw a lock-nut well back on the threads. Then insert the threaded end in the box and screw on the end bushing. By tightening the lock-nut on the outside, the conduit is then securely fastened to the box. The box also becomes a part of the complete grounded circuit, and for this reason the lock-nuts should be well tightened with a wrench, to insure good connections.

Fig. 60 shows a conduit bushing on the left, and a lock-nut in the center view.

The bushing not only helps to secure the pipe to the box, but also has a smooth rounded end to protect the wires from damage against the edges of the conduit.

Never attach a small conduit to a hole that is too large in the outlet box, without using proper reducers or washers to get a secure connection.

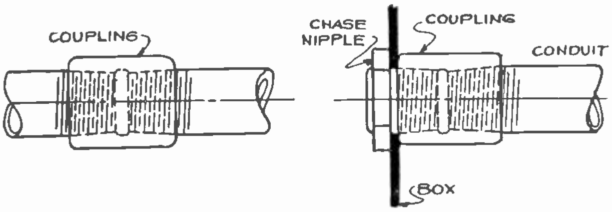

Fig. 59. Threaded couplings are used to connect lengths of conduit together, and in some cases to connect them to outlet boxes with a special nipple.

51. REAMING, CUTTING AND BENDING OF CONDUIT

The ends of all lengths of conduit are reamed at the factory to eliminate sharp corners that might otherwise damage the insulation on the wires. When you cut shorter lengths they should be reamed, as shown in Fig. 61, before coupling them together, or attaching them to outlet boxes. This removes any possible sharp edges on the inner corners, and protects the insulation of the wires from damage when drawing them in.

When a piece of conduit shorter than ten feet is required, it can easily be cut to the desired length with a hack-saw, as shown in Fig. 62. Considerable care should be taken in measuring the length of conduit runs, so that the piece will be cut the proper length to fit the location of the outlet box, and avoid mistakes that will spoil lengths of conduit.

Where a conduit run must turn a corner or go around some obstruction, the smaller sizes can be easily bent with a device called a "hickey".

Fig. 63 shows the method of bending a piece of ½-inch conduit with one of these hickeys. The conduit can either be laid on the floor, as shown in this view, or fastened in a pipe vise securely mounted on a bench or truck. Special stands with pipe legs for attaching to floor are also obtainable for conduit bending and cutting. Fig. 63-B shows two types of hickeys or grips without the pipe handles in them.

Fig. 60. A bushing and lock nut of the type most commonly used in attaching conduit to outlet boxes.

52. SIZES AND TYPES OF BENDS, AND NUMBER ALLOWED

In making conduit bends care should be used not to bend them too sharply and cause the pipe to flatten, as this will reduce the inside opening, and make it difficult or impossible to draw the wires through it. The inside radius of any bend should not be less than six times the rated diameter of the conduit. This means that the bend would form part of a circle with a radius six times the conduit diameter.

Thus, if we were bending ½-inch conduit, the inner radius of any bend should not be less than three inches, which would mean that the curve of the pipe should conform to, or fit the outer edge of a circle six inches in diameter.

Fig. 64 shows several of the more common bends made in conduit, and the names by which they are called. Not more than four right angle bends are allowed in any single run of conduit between outlet boxes. This is because the greater the number of

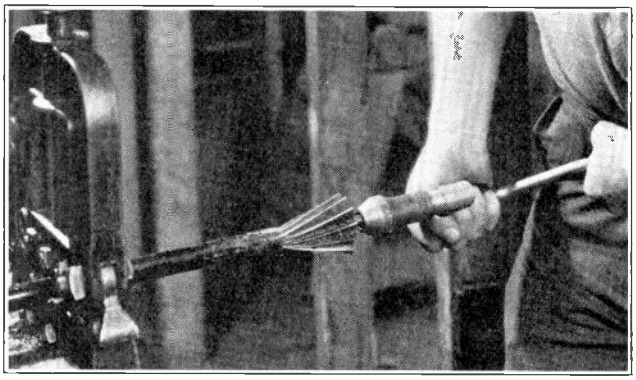

Fig. 61. Reaming the end of a piece of conduit after cutting to remove sharp edges, which might damage the insulation on the wire.

bends the harder it is to pull the wires through the pipe.

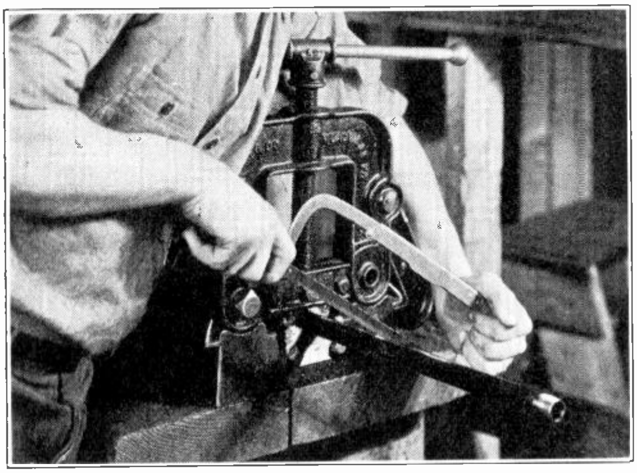

Fig. 62. Cutting a piece of rigid conduit with a hack saw. It should always be cut squarely as otherwise it is difficult to properly ream and thread it.

53. CONDUIT FITTINGS

While the sizes from ½-inch to 1-inch can be quite easily bent, on the larger sizes it is quite customary to buy manufactured elbows. However, the larger conduits can be bent on the job with power bending equipment, or by use of block and tackle, and some secure anchorage for the pipe. Sharp turns in conduit can be made by the use of fittings commonly known as **condulets** and **unilets.** These fittings are also made for attaching one length of conduit into another, and for crossing conduits, and for practically every need that can arise in a conduit installation.

Fig. 63. Smaller sizes of conduit can be easily bent into the required curves and shapes with a bending "hickey", in the manner shown here.

Fig. 65 shows a number of these fittings with their proper letters, by which they are marked and called when buying. Examine these fittings and note their various applications carefully. The letter L denotes an elbow or fitting used to make a right angle turn. An L.R. fitting is one that is used to make a turn to the right, while an L.L. fitting is one used to make a turn to the left.

These directions are determined by holding the condulets up with the opening toward you, and the short L. on the lower end. Then, if this short extension points to the right, it is an L.R., or if it points to the left it is an L.L. fitting.

An L.B. is one with an opening in the back. An L.F., one that opens to the front.

There are also **Tee** fittings with a tap opening on the back or either side desired, and cross fittings with openings on both sides, as well as the ends. The fittings here mentioned are the ones more commonly used and, along with the special fittings made, will fill almost every need that can arise.

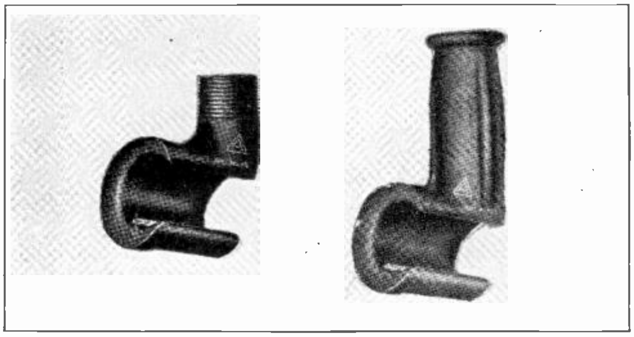

Fig. 63-B. These views show two types of grips or "hickeys" used with a pipe handle for bending conduit.

54. PULL BOXES AND JUNCTION BOXES.

In addition to these fittings, and the regular outlet boxes used for mounting switches and fixtures, there are also pull boxes, which are used at various points in long runs of conduit to make it easier to pull in the wires in shorter sections at a time.

Sometimes the run of conduit is so long, or has so great a number of bends, that it is impossible to pull the wires through the whole distance at once without running the risk of breaking them or damaging the insulation. In such cases the wires can be pulled through as far as the first pull box along the run, and then looped back, and pulled through the following section.

In other cases boxes are used where there are junctions in the wiring system and a number of splices must be made. These are called "Junction"

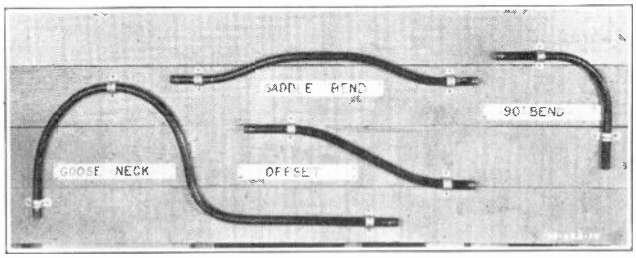

Fig. 64. This photo shows several of the more common bends frequently made in conduit. Note the names given to each. The saddle bend can, of course, be made much deeper in the form of a "U" when required.

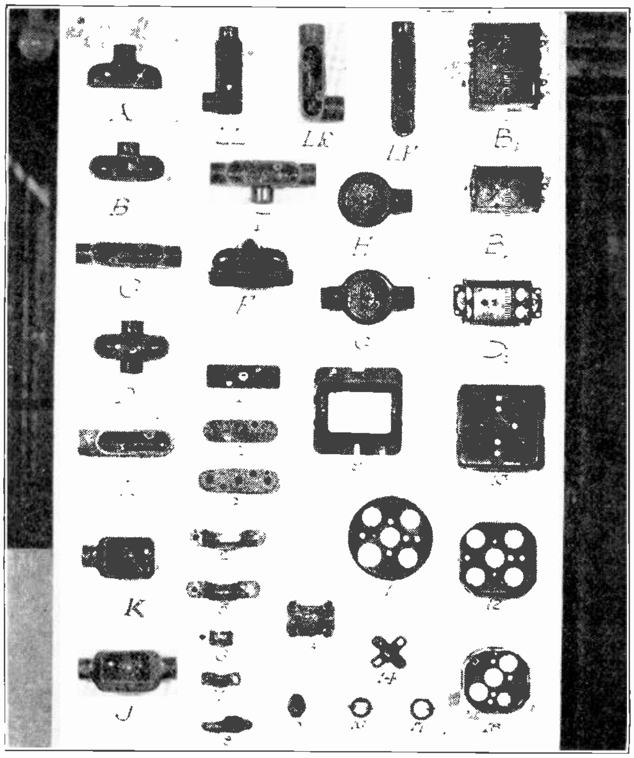

Fig. 65. This photo shows a number of the more common types of conduit fittings and outlet boxes, also porcelain covers for the fittings, conduit straps, fixture stud and lock nuts.

boxes. Several of the more common types of outlet boxes are shown in Fig. 65. There are many types of special boxes for almost every possible requirement, but those shown and mentioned here will fill the need in 95 per cent or more of the cases in ordinary wiring jobs. Fig. 65-B shows a number of the covers used on these boxes. Some are blank for merely closing the boxes, and others have openings and screws for attaching switches or receptacles, or for leading out wires to terminals of devices or other systems.

55. SUPPORTS FOR CONDUIT

Conduit is supported and fastened with pipe straps, which may have either two holes for nails or screws, or a single hole. Fig. 65 shows several different types and sizes.

When these straps must be attached to brick or masonry it is necessary to first drill holes in the masonry with a star drill, such as shown in Fig. 66. These drills can be obtained in different sizes, and are used to make holes of any desired depth by simply tapping them with a hammer and gradually rotating them in the hole. Those of the larger size can be used to make openings clear through a wall for the conduit to pass through.

When holes are made for conduit fasteners a wooden plug can be driven tightly into these holes to receive wood screws or nails; or a more desirable method is to use expansion bolts, similar to those shown in Fig. 67. For expansion bolts the star drill holes must be made the proper size to fit the bolt, and when the expansion shell is inserted, and the bolt screwed into it, it causes the shell to spread and grip the sides of the hole very tightly.

For fastening conduit or wiring materials to tile, a toggle bolt such as shown in Fig. 68 is used. These bolts have a hinge bar or cross-piece, which can be folded against the side of the bolt so they can be pushed into a small hole in the tile. Then, by turning the bar crosswise, the ends of this bar catch on the inner side of the hole, making a very secure anchorage.

In buildings of concrete or masonry construction the pipe is embedded in the cement, brick, or tile and requires no supports, except to hold it in place temporarily while the concrete is being poured, or the masonry erected around it.

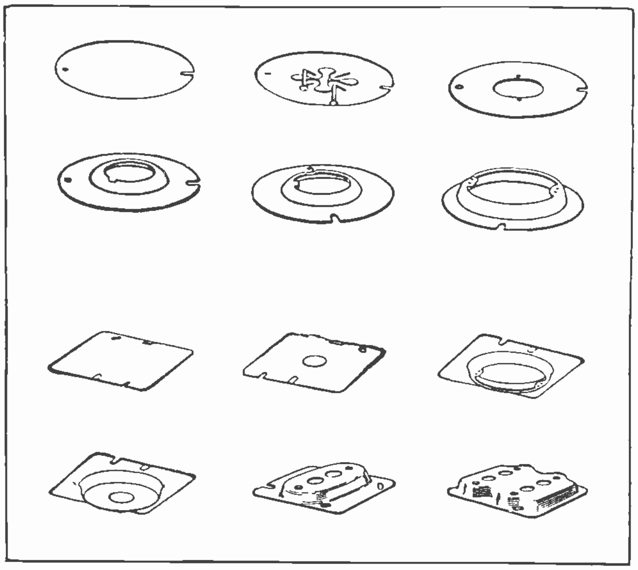

Fig. 65-B. Various types of covers can be obtained for outlet boxes and for mounting switches, lamp receptacles, etc.

The Code requires that in all conduit installations the pipe and fittings must be installed complete before any wiring is put in, and the wires should not be run until all mechanical construction work around the building is finished. This rule is made to avoid the possibility of the wires being damaged.

Ordinary rubber covered wire, with either single or double braid, can be used in conduit systems; but double braid must be used on wires larger than No. 8. In special locations where it is particularly dry and hot, wire with slowburning insulation can be used.

For use in conduit, wires No. 6 and larger must be stranded for better flexibility and ease in pulling them in.

Fig. 66. This view shows the cutting nose of a star drill, such as used for drilling holes in masonry for attaching or running conduit in buildings of masonry construction.

56. PULLING WIRES INTO CONDUIT

To pull wires into a conduit system we first push a steel "fish tape" through the pipe. This can be forced through the allowed number of bends quite easily, as a rule. The wires are then attached to the end of the fish tape and pulled in the conduit. All the wires in any one run should be pulled in at one time. It is very difficult and impractical to draw wires into pipe that already has several in it, because of the friction of the sticky insulation of the moving wires rubbing against the stationary ones.

This same rule applies when repairing or replacing wires in conduit. You may wish to replace only one or two wires, but it will be better to remove the entire group, and then pull the new ones in with the old wires.

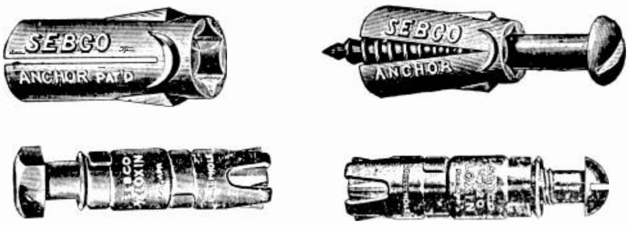

Fig. 67. Several types of expansion bolts and shells used for fastening conduit strips to holes and masonry.

No splices are allowed in wires in the conduit, or at any place except in the proper fittings or outlet boxes.

If we were to attempt to pull wires with splices into a run of conduit, the taping might be pulled off at some bend or corner, leaving the bare splice to cause a ground or short circuit.

As each section of the wiring is pulled into the runs of conduit, the ends can be cut off at the outlet box, always allowing enough to make the necessary splices and connections. It is much better to allow a couple of inches extra and cut these off when installing the switches and fixtures, than to have the wires too short, and have to replace them or draw them up in a manner that places a strain on them.

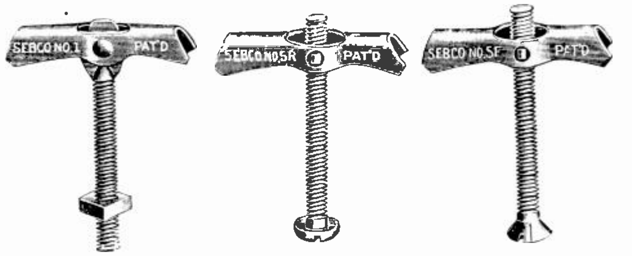

Fig. 68. Toggle bolts of the type used to attach conduit to tile walls or ceilings.

WIRES IN CONDUIT

Size of Wire	Number of Wires in One Conduit								
	1	2	3	4	5	6	7	8	9
	Minimum Size of Conduit in Inches								
14	½	½	½	*¾	¾	1	*1	1	1
12	½	½	*¾	¾	¾	1	1	1	1¼
10	½	¾	¾	*1	1	1	1¼	1¼	1¼
8	½	¾	*1	1	1	1¼	1¼	1¼	1¼
6	½	1	1¼	1¼	1½	1½	2	2	2
5	¾	1¼	1¼	1¼	1½	2	2	2	2
4	¾	1¼	1¼	1½	2	2	2	2	2½
3	¾	1¼	1¼	1½	2	2	2	2½	2½
2	¾	1¼	1½	1½	2	2	2½	2½	2½
1	¾	1½	1½	2	2	2½	2½	3	3
0	1	1½	2	2	2½	2½	3	3	3
00	1	2	2	2½	2½	3	3	3	3½
000	1	2	2	2½	3	3	3	3½	3½
0000	1¼	2	2½	2½	3	3	3½	3½	4
200000C.M	1¼	2	2½	2½	3	3	3½	3½	4
225000	1¼	2½	2½	3	3	3½			
250000	1¼	2½	2½	3	3	3½			
300000	1¼	2½	3	3	3½	3½			
350000	1¼	2½	3	3½	3½	4			
400000	1¼	3	3	3½	4	4			
450000	1½	3	3	3½	4	4½			
500000	1½	3	3	3½	4	4½			
550000	1½	3	3½	4	4½	5			
600000	2	3	3½	4	4½	5			
650000	2	3½	3½	4					
700000	2	3½	3½	4½					
750000	2	3½	3½	4½					
800000	2	3½	4	4½					
850000	2	3½	4	4½					
900000	2	3½	4	4½					
950000	2	4	4	5					
1000000	2	4	4	5					
1100000	2½	4	4½	6					
1200000	2½	4½	4½	6					
1250000	2½	4½	4½	6					
1300000	2½	4½	5	6					
1400000	2½	4½	5	6					
1500000	2½	4½	5	6					
1600000	2½	5	5	6					
1700000	3	5	5	6					
1750000	3	5	5	6					
1800000	3	5	6	6					
1900000	3	5	6						
2000000	3	5	6						

*Where single conductor, single braid, solid wires only, are used, four No. 14 wires may be installed in a ½ inch conduit and up to seven No. 14 wires in a ¾ inch conduit. Three No. 12 wires may be installed in a ½ inch conduit, four No. 10 wires in ¾ inch conduit and three No. 8 wires in a ¾ inch conduit.

Fig. 69. This table gives the proper number of wires of different sizes which can be allowed in various conduits. It is very convenient to use in selecting the proper size of conduit for certain number of wires of any desired size.

Sometimes considerable difficulty is experienced in pulling wires into long runs with a number of bends, but a great deal of this can be eliminated by the proper care. If a large number of wires are to be pulled into any conduit, or if they have been started and don't come through easily, it is well to withdraw them and blow some powdered soap stone, or even powdered soap, into the conduit. This lubricates the wires, and eliminates a great deal of the friction, without doing any damage to their insulation. This is particularly useful when pulling in large cables.

Never use oil or grease of any kind on the wires, as it is very injurious to the insulation.

While pulling on the wires from one end, it is a very good idea to have someone feed them carefully in to the point where they are drawn in. Keeping the wires straight and free from kinks and twists will help considerably to make them pull in with the least possible friction.

Sometimes in vertical runs of conduit, instead of using a steel fish tape, a "mouse" consisting of a small steel ball or piece of steel chain, is dropped through the pipe with a string attached, and this cord can then be used to pull in the wires; or a large rope which in turn can be attached to the wires.

Wires in long vertical runs of conduit in high buildings should be supported at various intervals, either by driving wood wedges into the pipes at outlet boxes, or by looping the wires around strain insulators in special boxes. This is done to remove from the wires near the top the strain of the weight of a long vertical run.

57. NUMBER OF CIRCUITS AND WIRES ALLOWED IN ONE CONDUIT

Wires of different voltages, such as bell wires and wires for light or power, must never be run in the same conduits.

When running wires for alternating current systems, the two wires of a single phase, or three wires of the three phase system, must all be run in the same conduit; otherwise, they will set up magnetically induced currents in the iron pipe, which will cause it to overheat.

Running all the wires of the same circuit through the one pipe causes their magnetic flux to be neutralized, because the currents flow in different directions through the different wires.

Fig. 69 shows a table which gives the proper number of wires that can be allowed in conduit of any given size; or, in other words, this table can be used to determine the sizes of conduit required for any number of wires of a certain size.

For example, from 1 to 3 No. 14 wires will require ½-inch conduit, while 4 or 5 can be run in ¾-inch conduit, and from 6 to 9 in 1-inch conduit. To run 4 number 10 wires requires 1-inch conduit, or to run 3 number 6 wires requires 1¼-inch conduit.

These figures are for double braid insulation. For single braid, see note under table in Fig. 69.

RUBBER-COVERED WIRE.—OUTSIDE DIAMETERS.

Size Wire	Diam. of Bare Copper, Inches	Diameter Outside Insulation		Circumference, Inches	Size Wire	Diam. of Bare Copper, Inches	Diameter Outside Insulation		Circumference, Inches
		Inches	Nearest 64th				Inches	Near-est 64th	
14*	.064	.19	12/64	.....	250,000	.575	.89	57/64	2 51/64
12*	.080	.21	14/64	.....	300,000	.630	.94	60/64	2 62/64
10*	.102	.24	15/64	.....	350,000	.681	.99	1	3 8/64
8*	.128	.27	17/64	.....	400,000	.728	1.03	1 2/64	3 15/64
6	.184	.40	26/64	1 17/64	450,000	.772	1.08	1 5/64	3 24/64
5	.206	.42	27/64	1 21/64	500,000	.814	1.12	1 8/64	3 33/64
4	.232	.45	29/64	1 27/64	550,000	.855	1.18	1 12/64	3 46/64
3	.260	.48	31/64	1 33/64	600,000	.893	1.23	1 15/64	3 55/64
2	.292	.51	33/64	1 39/64	650,000	.929	1.27	1 17/64	3 63/64
1	.332	.58	37/64	1 53/64	700,000	.964	1.30	1 19/64	4 5/64
0	.373	.62	40/64	1 61/64	750,000	.998	1.33	1 21/64	4 12/64
00	.418	.67	43/64	2 7/64	800,000	1.031	1.36	1 23/64	4 17/64
000	.470	.72	46/64	2 17/64	850,000	1.062	1.40	1 26/64	4 26/64
0000	.528	.78	50/64	2 29/64	900,000	1.093	1.44	1 28/64	4 33/64
					950,000	1.123	1.47	1 30/64	4 40/64
					1,000,000	1.152	1.50	1 32/64	4 46/64
					1,250,000	1.322	1.68	1 44/64	5 18/64
					1,500,000	1.412	1.78	1 50/64	5 37/64
					1,750,000	1.552	1.92	1 59/64	6 3/64
					2,000,000	1.631	2.00	2	6 18/64

Fig. 70. This table gives the diameter of various sized wires in inches and fractions. These diameters are given both for bare and insulated wires.

This table is very easy to read and use, by simply noting the sizes of the wire in the left-hand column and the number of wires desired in the row across the top, and then reading down under this number to the line for that size of wire, where the proper size of conduit will be found.

Examine this table carefully and become familiar with its use because it will prove very convenient.

For wire groups and combinations not shown in the table, it is recommended that the sum of the cross sectional areas of the wires to be run in any conduit should not be more than 40 per cent of the area of the opening or bore in the conduit.

Under such conditions, however, it is usually well to consult the Inspection Department before going ahead with the work.

Dimensions of Rubber-Covered Wire.

Wire	Area	Wire	Area	Wire	Area
14	.028	225,000 C.M.	.55	1,000,000 C.M.	1.74
12	.035	250,000 C.M.	.58	1,100,000 C.M.	2.04
10	.045	300,000 C.M.	.69	1,200,000 C.M.	2.16
8	057	350,000 C.M.	.77	1,250,000 C.M.	2.22
6	13	400,000 C.M.	83	1,300,000 C.M.	2.27
5	15	450,000 C.M.	.92	1,400,000 C.M.	2.40
4	17	500,000 C.M.	99	1,500,000 C.M.	2.52
3	19	550,000 C.M.	1.11	1,600,000 C.M.	2.63
2	.21	600,000 C.M.	1.19	1,700,000 C.M.	2.78
1	.27	650,000 C.M.	1.27	1,750,000 C.M.	2.85
0	.31	700,000 C.M.	1.33	1,800,000 C.M.	2.89
00	.36	750,000 C.M.	1.39	1,900,000 C.M.	3.05
000	.42	800,000 C.M.	1.45	2,000,000 C.M.	3.14
0000	.49	850,000 C.M.	1.54		
		900,000 C.M.	1.60		
		950,000 C.M.	1.68		

Fig. 71. Table of areas of various wires and cables in square inches. These figures are very convenient when calculating the area of a number of conductors to go in conduit. Areas given include insulation.

The table in Fig. 70 gives the diameter in fractions of an inch for the different sized wires, both bare and with insulation, while table 71 gives the area in thousandths of a sq. inch of the more common sized wires. These tables will make it easy to determine the total area of a number of wires of any size that you might desire to run in conduit. Then it will be easy to tell whether this is more than 40 per cent of the size of the conduit, by referring to table 72, which gives the area in sq. inches of the different standard sizes of conduit.

DIMENSIONS OF CONDUIT

Conduit	Area	40% of Area	Conduit	Area	40% of Area
½	.306	.122	3	7.34	2.93
¾	.516	.206	3½	9.94	3.97
1	.848	.339	4	12.7	5.08
1¼	1.49	.596	4½	15.9	6.36
1½	2.03	.812	5	19.9	7.96
2	3.32	1.328	6	28.8	11.52
2½	4.75	1.9			

Fig. 72. This table gives both the total area of the inside opening in conduit, and 40% of the area of the different sizes, which is the amount that can be occupied by the conductors.

This latter table also shows in two of the columns, 40 per cent of the area of each size conduit, which makes it a very handy table. As an example of its use, if we were required to run six number 6 wires and four number 2 wires all rubber covered, we would multiply the area of a number 6 wire, which is .13, by 6; or .13 × 6 = .78. Then also multiply the area of a number 2 wire which is .21, by 4; or .21 × 4 = .84. Then .78 plus .84 equals 1.62 square inches, total area for all the wires.

Now in the column headed "40 per cent of the area" it will be found that a 2½-inch conduit will be required, as it is the next larger, and 40 per cent of its area will be 1.90 square inches.

Ordinarily the Code doesn't permit more than nine wires of any size in one conduit. Sometimes it is not advisable to allow even this many, not only because of the difficulty in pulling them in but also because if one wire breaks down or develops a short or ground, the arc is likely to damage the insulation of all the others and cause trouble in other circuits as well.

Where lead covered conductors are to be run in conduit, the table in Fig. 73 will be very convenient for determining the proper size of conduit for any number of lead covered wires of a given size.

SIZE OF CONDUIT FOR THE INSTALLATION OF WIRES AND CABLES

Lead Covered Wires (0-600 Volts) (Single Conductors)

Size of Wire	Outside Diam. 64th	Diam. Dec. Equiv.	Number of Conductors in One Conduit			
			1	2	3	4
			Minimum Size of Conduit in Inches			
14	16	.25	½	½	¾	¾
12	18	.27	½	¾	¾	1
10	21	.32	½	¾	1	1
8	23	.35	½	1	1	1¼
6	30	.47	¾	1¼	1¼	1½
5	32	.50	¾	1¼	1¼	1½
4	33	.51	¾	1¼	1½	2
3	35	.55	¾	1½	1½	2
2	37	.58	1	1½	2	2
1	41	.64	1	2	2	2½
1/0	44	.68	1	2	2	2½
2/0	47	.73	1	2	2	2½
3/0	50	.78	1¼	2	2½	3
4/0	54	.84	1¼	2½	2½	3
250,000	62	.97	1¼	3	3	3½
300,000	65	1.01	1½	3	3	3½
350,000	68	1.06	1½	3	3	3½
400,000	71	1.11	1½	3	3½	4
450,000	74	1.15	1½	3	3½	4
500,000	78	1.21	2	3½	3½	4
550,000	86	1.34	2	3½	4	4½
600,000	88	1.37	2	3½	4	4½
650,000	90	1.40	2	4	4	5
700,000	92	1.43	2	4	4	5
750,000	94	1.47	2	4	4	5
800,000	96	1.50	2½	4	4½	5
850,000	99	1.55	2½	4	4½	5
900,000	100	1.56	2½	4	4½	5
950,000	102	1.59	2½	4½	4½	6
1,000,000	105	1.64	2½	4½	4½	6
1,250,000	116	1.81	3	5	5	6
1,500,000	126	1.97	3	5	6	
1,750,000	136	2.12	3	6	6	
2,000,000	142	2.21	3	6	6	

Note.—Nos. 14 to 8, solid wires, all other stranded. Outside diameters are given as wires of different makes vary in the outside diameters of similar sizes. This table is based on runs of fifty feet and not more than two standard right angle elbows. Where there are no elbows, or where manufactured bends of a radius greater than the standard elbow are used, special permission in writing may be granted for a deviation from the above table.

Fig. 73. This table gives the number of lead covered wires of different sizes that can be contained in various sized conduits.

58. GROUNDING CONDUIT SYSTEMS

When the entire conduit system is installed complete from the service switch and meter throughout the entire building, it must be thoroughly grounded as near to the source of current supply as possible. This ground connection should be made at a waterpipe whenever available. If no piping systems are in the building which can be depended upon for a good ground connection, then a good ground rod or piece of pipe can be driven into the ground eight feet deep to make sure that it is always in contact with moist earth, or a large plate of metal can be buried several feet in the earth, and covered with charcoal and salt as well as earth.

All conduit systems are required to be grounded, whether any part of the wiring within them is grounded or not. These ground connections from the conduit to the waterpipe or ground rod should be as short as possible, and always accessible for inspection, as they must be maintained in good, unbroken condition at all times.

Where the wiring system is not polarized and none of its wires are required to be grounded, the conduit can be grounded by use of copper ground strips, as shown in Fig. 74, or by extending a piece of conduit from the regular conduit system to the waterpipe and attaching its ends to both of them by special clamps.

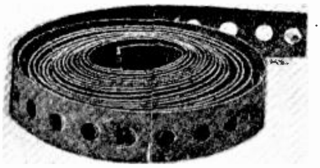

Fig. 74. Copper grounding strip of the type shown above is often used to ground conduit systems to the waterpipes or earth grounds.

Where wires are used for grounding, the wire should not be smaller than a No. 8, and should be attached to the waterpipe with a special grounding clamp, two styles of which are shown in Fig. 75.

Fig. 76 shows three styles of grounding clamps, the upper one of which is equipped with a cable lug, into which the heavy ground wire or cable should be securely soldered. The lower view shows two clamps that are used to attach both the ground wire and a piece of conduit to the waterpipe.

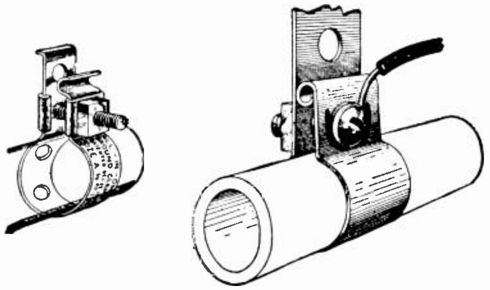

Fig. 75. Two types of grounding clamps used to securely attach ground wires to waterpipes.

These are used for polarized wiring systems, which will be explained later, and in which it is required to ground the neutral wire of the system with a ground wire, which is run through a short piece of conduit that is also connected to the waterpipe. This conduit not only acts as a ground for the conduit system, but also as protection for the ground

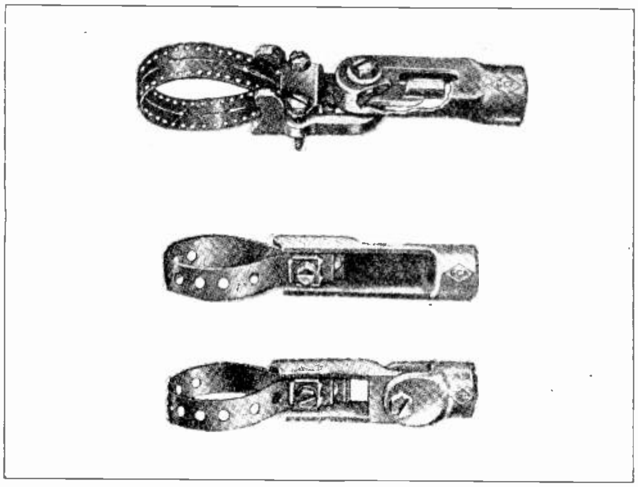

Fig. 76. Several approved type ground clamps used to attach both the conduit and ground wire to waterpipes.

wire of the electrical system. Always scrape all paint or rust from any pipe before attaching the ground clamp.

This thorough grounding, as previously mentioned, is an essential requirement for maximum safety from fire and shock hazard in a wiring system, and should be done with the greatest of care by the electrician when installing such systems.

Fig. 77 shows what is called an isometric view or phantom view of a house in which a conduit system has been installed. This view shows the service and meter box in the basement, and the various runs of conduit to baseboard, convenience outlets and wall switches, wall and ceiling light fixture outlets on both the above floors, as well as a light in the attic.

59. ELECTRICAL METALLIC TUBING

This is a lightweight pipe, much like rigid conduit, which has recently been approved by the Fire Underwriters. It is made with very thin walls, so thin in fact that we are not permitted to thread it. This means that threadless fittings are used, which saves considerable labor.

Fig. 78 shows one of the fittings in a sectional view which shows the manner in which the tapered split sleeves are drawn in by the threads to grip the pipe.

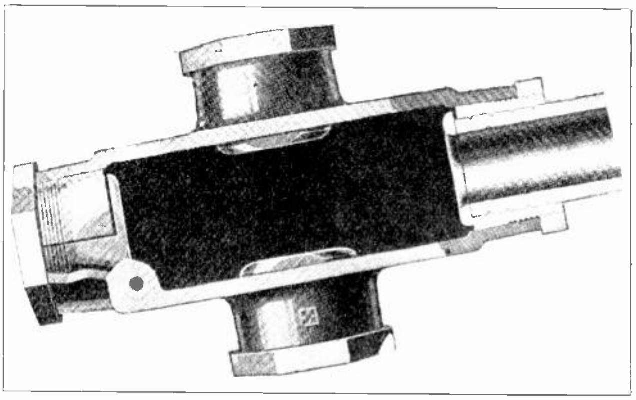

Fig. 78. Sectional view of a fitting for threadless conduit, showing the special gripping sleeves inside its ends.

Fig. 79 shows how easily the fittings can be placed on or removed from the pipe, by slipping the lock-nuts on the pipe and the grip-nuts inside

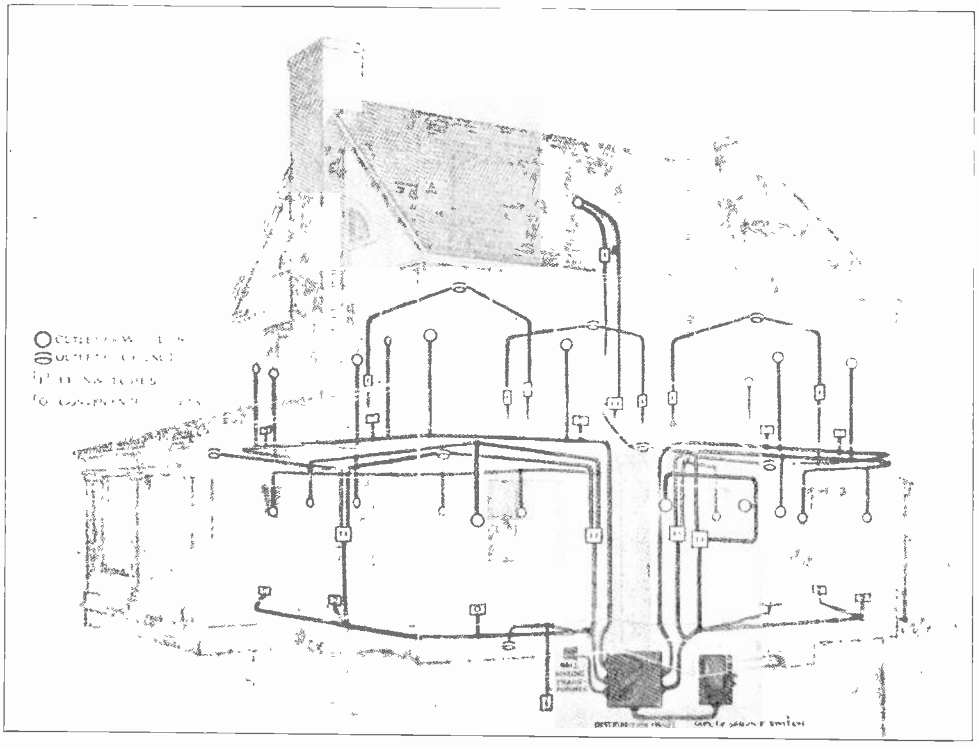

Fig. 77. Isometric or phantom view of a house in which conduit is installed. Note the arrangement of conduit in walls and ceilings, and the locations of various outlets.

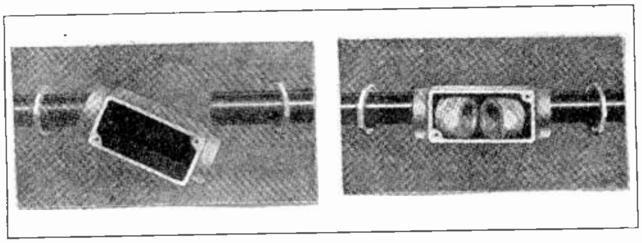

Fig. 79. This view shows the convenient manner in which threadless fittings can be installed with conduit.

the fitting. This tubing is lighter and easier to handle than regular conduit and is lower in price. It can be bent with less effort, and the cost of installation, due to the saving of time, is also less. Special couplings and fittings of all types are supplied for this tubing, similar to conduit fittings but with the grips for threadless pipe. Fig. 80 shows a coupling used for threadless tubing.

Split bushings are also made for use of standard conduit fittings with metallic tubing.

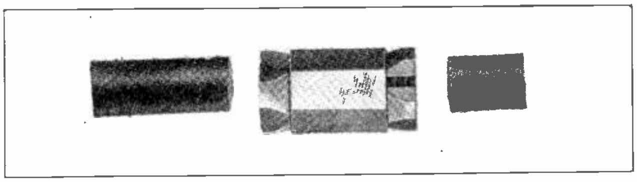

Fig. 80. Special coupling used for connecting together lengths of threadless conduit or electric metallic tubing.

With a few exceptions, the same rules apply to this metallic tubing as to the standard conduit, but it cannot be run concealed. This tubing and its special fittings must be so finished that it will never be mistaken for rigid conduit. It may be finished in either enamel or zinc and in standard sizes is approved in only ½" or ¾" and 1". Its use is restricted to voltages of 300 volts or less, to No. 8 wire or smaller, and no circuit therein shall be fused for over 30 amperes. Furthermore, it can only be used in exposed dry places where it cannot be subjected to mechanical injury or corrosive vapors.

Even with all these restrictions, its advantages, as noted above, make it a desirable system when put to its intended use. Fig. 81 shows a section of an installation of threadless tubing.

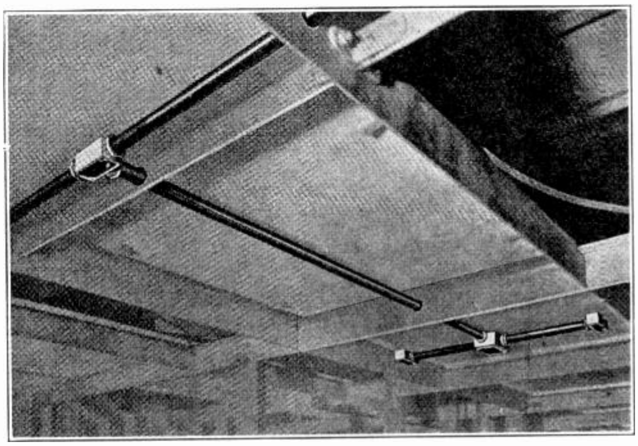

Fig. 81. Section of an installation of electric metallic tubing with threadless fittings.

60. FLEXIBLE CONDUIT

Flexible conduit is used very much the same as rigid conduit, except that its flexibility permits it to be fished into walls and partitions in old buildings, where rigid conduit cannot be conveniently installed.

As mentioned before, flexible conduit consists of tubing made of spirally wound steel strips, the turns of which are securely locked together to form a continuous metal casing in which the wires are run. Figs. 82 and 83 show pieces of flexible conduit of different types, which will give you a general idea of its construction.

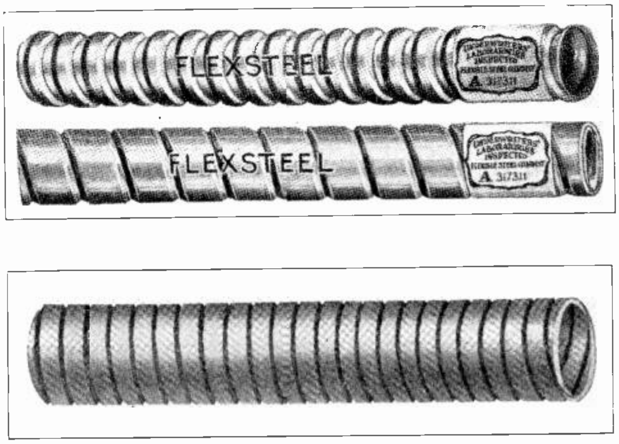

Fig. 82 & Fig. 83. Pieces of several types of flexible conduit, showing how it is constructed of narrow steel strips wound spirally.

Like rigid conduit, this system must be run continuously from one outlet to the next, and the entire system grounded.

Fig. 84 shows several types of couplings used in connecting lengths of flexible conduit together, and also to attach it to outlet boxes. The upper left view shows an ordinary straight coupling and the grooves which enable it to grip the turns of the conduit when it is bolted on. The lower left view shows a fitting for making sharp turns with flexible conduit, where it attaches to an outlet box. The upper right hand view shows a coupling that can be used for attaching flexible to rigid conduit, or for attaching flexible conduit to an outlet box, with an added nipple. The lower right view shows a very common connector used for attaching either flexible conduit or armored cable to outlet boxes.

Flexible conduit is not as waterproof as rigid conduit is, and should not be used in very damp places, unless rubber covered wires with lead sheaths are used, and it should not be imbedded in concrete.

Its particular advantages are for wiring old buildings, getting through difficult places with a number of bends, and for running flexible leads from rigid conduit to motors or other electrical machines.

Fig. 85 shows a photograph of a motor connected up with flexible conduit. This is one of its very definite advantages as it allows a motor to be moved slightly to tighten belts, etc.

The same type of outlet boxes, conduit straps, and many of the same general rules for rigid conduit are also used for flexible conduit.

The more important points of conduit wiring systems have been carefully covered in this section, and it will be well for you to get a good general understanding of this system, as it is one of the most important of all and is in very extensive use.

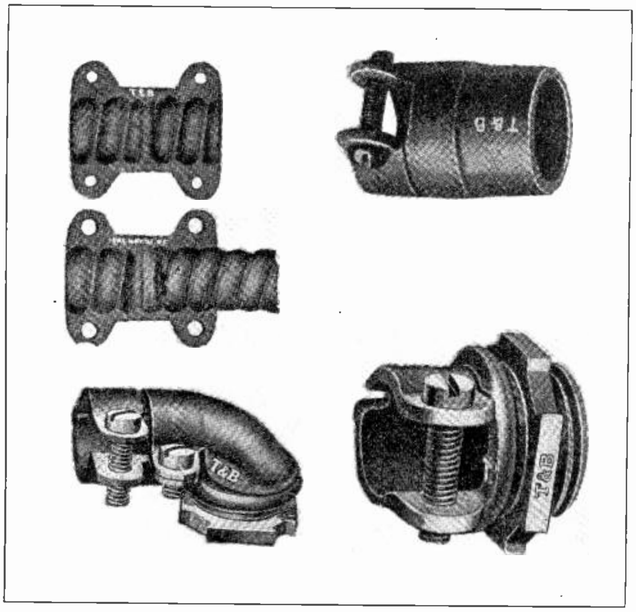

Fig. 84. Several types of couplings used for connecting flexible conduit together or to outlet boxes.

61. ARMORED CABLE

On the outside, armored cable looks much like flexible conduit. But there is this difference; while the latter has the wire pulled in after it has been installed, armored cable has the wires already in when purchased. It is made in two types and is frequently known as BX or BXL. The former consists of one, two, three or four conductors with rubber insulation and heavy waxed braid, and then an addition of an armor of steel ribbon.

Fig. 86 shows a piece of 3-wire BX and one with two wires. Note the color markings of the wires and the extra twin braid over each group.

BXL is made in a similar way but has the addition of a lead sheath just under the steel armor. This makes it waterproof and permits it to be used where there is moisture, or where it is exposed to the weather. BX may be obtained with wires from No. 4 to No. 14.

62. ADVANTAGES OF ARMORED CABLE WIRING

Armored cable wiring is a very popular system for all wood construction buildings. While rigid conduit is usually used for concrete work, and sometimes used for other types of buildings, it is occasionally found too expensive for certain jobs. The use of armored cable or BX gives us a first class job at low cost, can be installed almost as cheaply, and is much better than Knob and Tube work. It makes a good job on all new work, and is absolutely the best system for old house wiring. It is very convenient and economical to install because its flexibility makes it easy to run in difficult places and because, when BX is installed, the wires are in also and do not have to be pulled in later.

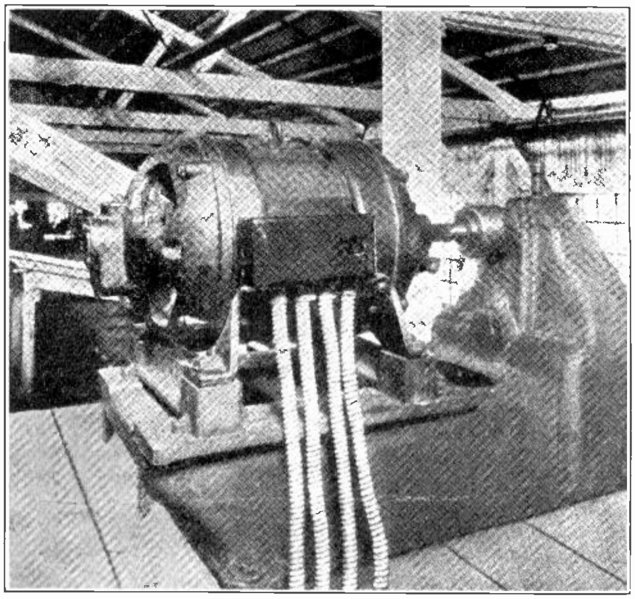

Fig. 85. Flexible conduit is very convenient for motor connections, as it allows some movement of the motor for belt tightening, etc.

The same outlet and switch boxes are used for BX as for conduit, and are installed with BX fittings made for the purpose and clamped securely to the BX armor, and then fastened to the boxes with a lock-nut. Fittings are also made so that BX can be used in conjunction with the other systems of wiring. Several of these fittings are shown in Fig. 87.

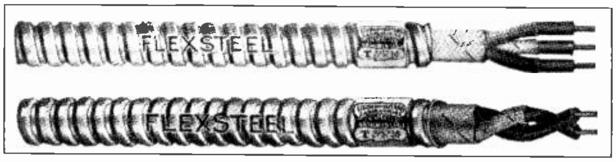

Fig. 86. Pieces of two different types of two-wire and three-wire armored cable. This material is supplied with the wires already in the armor.

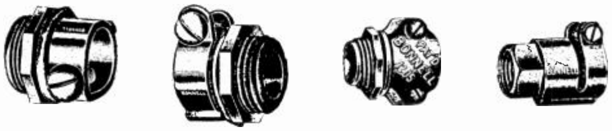

Fig. 87. Several types of fittings used for attaching armored cable to outlet boxes or rigid conduit.

Where possible BX should be fastened to the surface wired over with the proper size pipe straps. BX must be continuous from outlet to outlet. A violation of this would mean that you would have splices outside the outlet boxes, which is against the rule for metal systems, and then besides, you would increase the chance of not having a perfect ground throughout the system. The braids over the insulation of the different wires have different colors so the wireman can trace the "hot" or grounded wires, as will be explained later.

BX can be bought in rolls of 250 ft. or less, and then cut into the desired lengths with a hack saw. Fig. 88 shows a coil of BX as it would be bought.

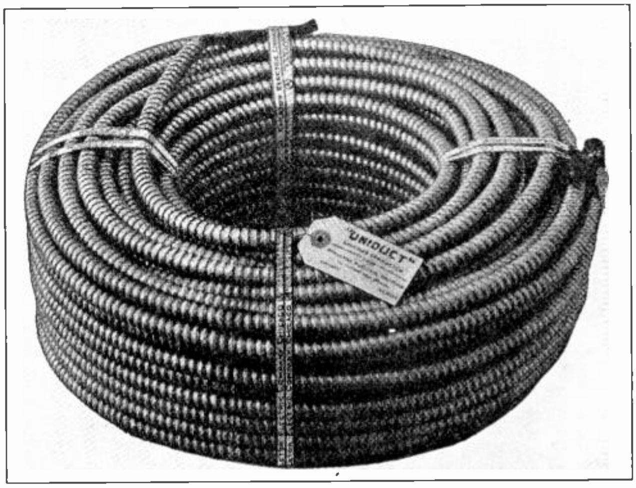

Fig. 88. A coil of armored cable or "BX" showing its convenient flexibility, which is one of the decided advantages of this material for wiring systems.

63. CUTTING AND STRIPPING BX

To cut BX, simply hold it firmly in a vise or against your knee or a piece of wood, and cut across one turn of the spiral steel wrapping, being sure to cut clear through one turn or strip of this steel, but do not cut into the insulation of the wire underneath.

To cut clear through the one turn it is necessary to cut into the turn next to it a little. Practice this cutting and you will soon find just the proper angle to hold the hack saw, and it will become very easy to make a neat cut. See Fig. 88-B.

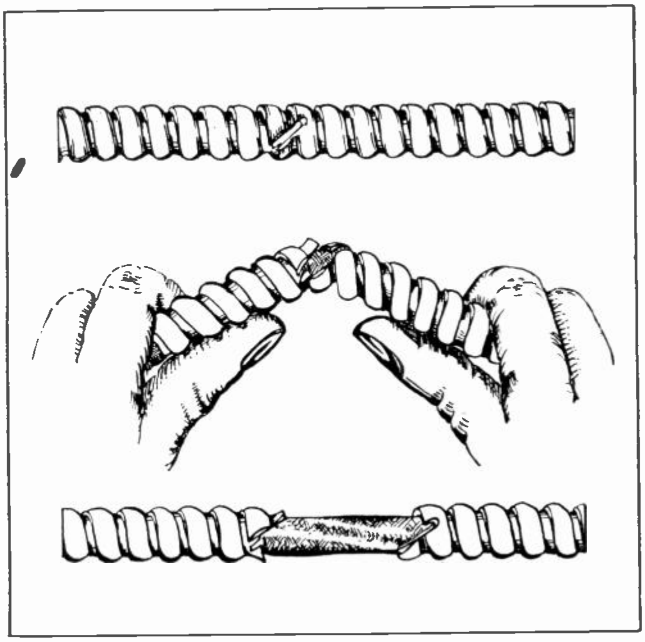

Fig. 88-B. The top view shows the proper method of cutting BX armor with a hack saw. The center view shows how it can then be broken apart without damaging the conductors or insulation inside. A short section of the armor can then be pulled off the end of the cable as shown in the lower view.

When the armor strip is cut through, bend the BX to open the cut and the armor will separate, and then the wires can be cut through squarely and easily with the hack saw.

To attach BX to an outlet box make the cut as described about 6 inches from the end, but only through the metal. Then bend the BX at the cut and separate the armor, and the short length can be easily pulled off from the ends of the wires. This leaves them ready to split the outer braid and strip the insulation for splicing. Fig 89 shows a piece prepared in this manner.

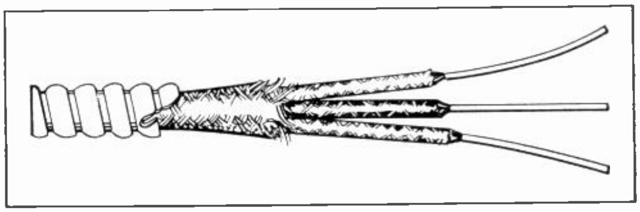

Fig. 89. This sketch shows how the ends of conductors in armored cable can be stripped for connections and splicing.

64. USE OF BXL

BXL or lead sheath BX is a very good system to use in underground work, running from one building to another, such as from a residence to a garage in the back end of the house-lot. A ditch of the proper depth, say 2 ft., can be dug. As the cable is flexible, this ditch does not necessarily have to be absolutely straight, but may be around any obstacle that might be in the way. Where galvanized rigid conduit is used more care has to be taken, and the joints where the lengths of conduit are coupled together must be leaded to keep out moisture. Great care should be taken in handling BXL, so as not to crack the lead. This precaution, of course, should be taken with all lead covered cables, but it is very necessary with BXL, as damage to the lead cannot be detected by inspection, and will only show up possibly weeks afterwards when moisture has time to leak through and cause a short.

65. METAL RACEWAYS OR MOLDING

Metal Raceways or metal molding is one of the exposed wiring systems that is quite extensively used. Although it does not afford such rugged and safe protection for the wires as conduit and armored cable do, it is a very economical and quite dependable system, and is very convenient to install in finished buildings where new wiring or extensions to the old are to be installed. One of the advantages of metal molding is its neat appearance where wiring must be run on the surface of walls or ceilings in offices, stores, etc.

It must never be run concealed or in damp places.

Two of the leading manufacturers of metal raceway materials call their products respectively, **wire mold** and **metal molding,** and they are quite commonly known by these names.

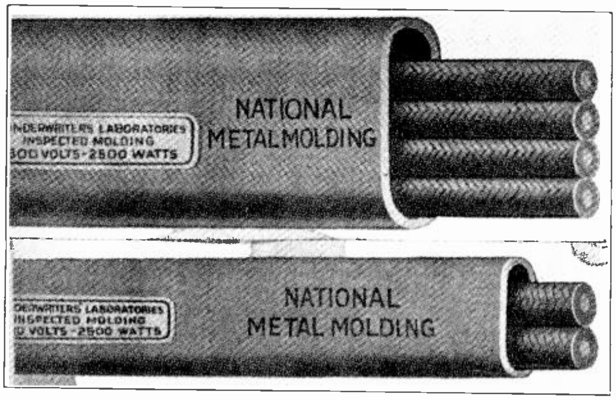

Fig. 90. Two pieces of metal molding of a very neat appearing type for exposed wiring systems.

Fig. 90 shows two pieces of one style of molding called "Ovalduct", and in which the wires are drawn after it is installed, similarly to conduit.

Fig. 91 shows another style that comes in two strips. The back strip is installed and then the wires are laid in it and the cap snapped in place over them.

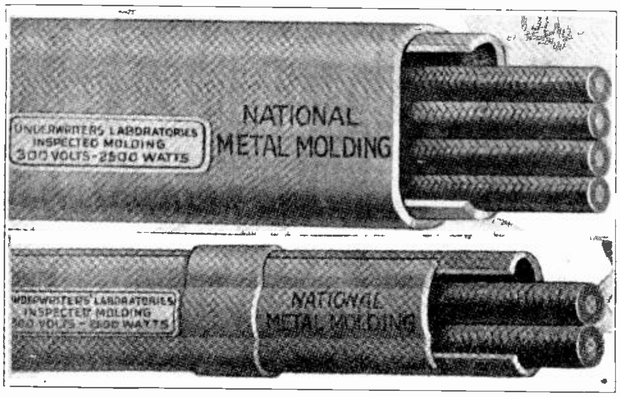

Fig. 91. Another type of metal molding with a removable cap or cover strip, which can be placed on after the wires are insulated.

Various types of fittings for couplings, corner turns, elbows, outlets, etc., are provided to fit these moldings. Fig. 92 shows a number of these fittings, and Fig. 93 shows a closer view of a common elbow fitting.

Many of the rules for BX systems apply also to metal raceways, such as: it must be continuous from outlet to outlet, must be grounded, and all wires of an A.C. circuit must be in one raceway, etc.

You will note from the Figures 90 and 91 that metal raceways are made in two sizes for either two or four wires. Another size is available now for 10 wires, but is to be used only in certain places as allowed by the Code or local authorities. Wires sizes No. 14 to No. 8 can be used with these moldings, and the wire must be rubber and braid covered, and installed with no splices except at proper boxes or fittings.

Fig. 94 shows a fitting that can be used as a junction box and for splices, or for an outlet box when a cover is used with an opening as shown.

Fig. 95 shows several sizes of boxes to be used with metal raceways, for mounting switches and receptacles. Note the wall plates which are to be attached to the surface wired over, and have slots in their edges for the molding to be slipped under

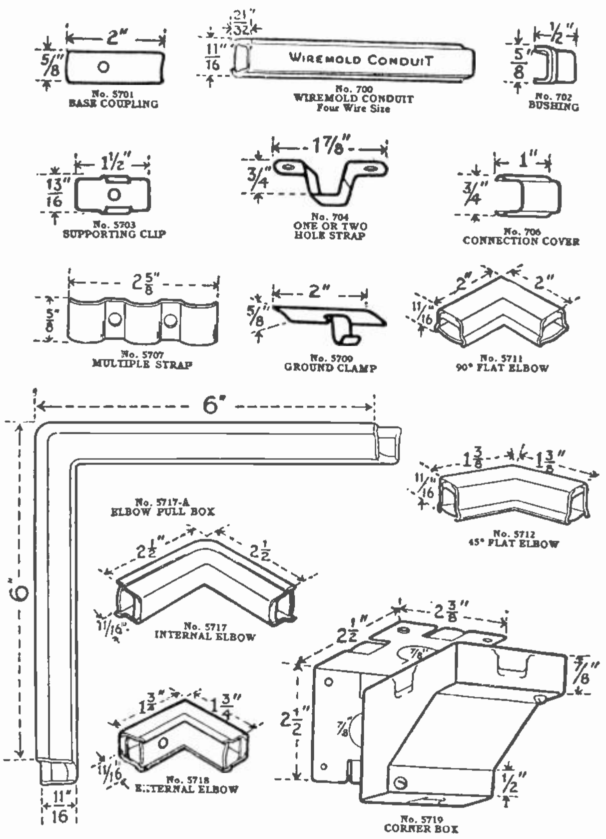

Fig. 92. A number of various types of fittings are provided for use with metal molding in making turns in the corners of walls and ceilings.

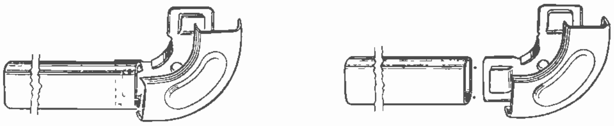

Fig. 93. A common form of elbow used with metal raceways or moldings.

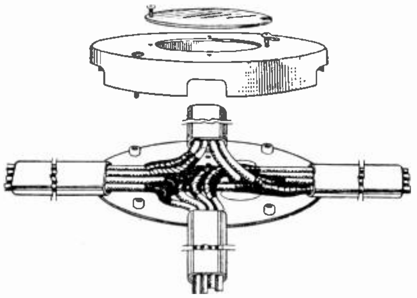

Fig. 94. This view illustrates the use of a junction box in which splices can be made, and various runs of metal raceway attached together. We can also attach lights or receptacles to the smaller opening in the cover of this box.

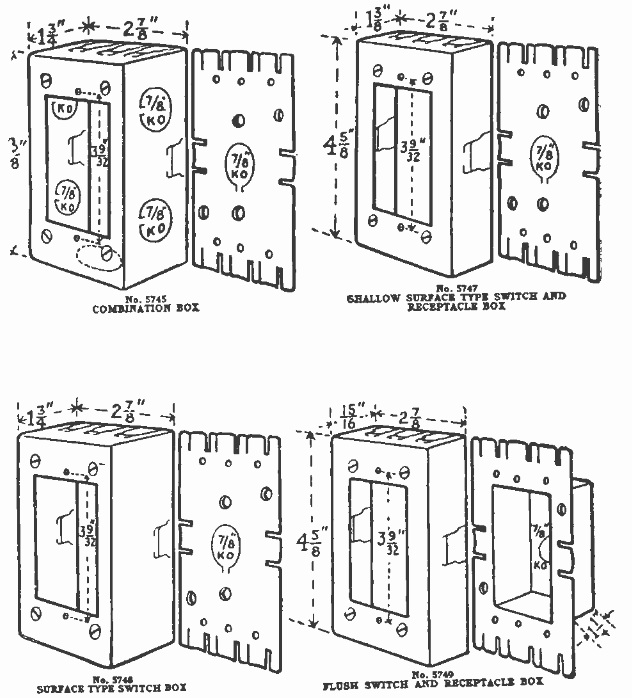

Fig. 95. Several styles and sizes of outlet box for use with metal molding and in which switches or receptacles can be installed.

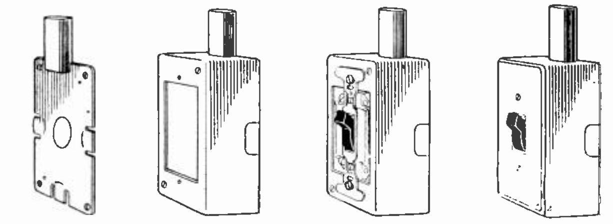

Back plate and Molding Installed on Surface.

Box mounted.

Toggle Switch Installed in Box.

Installation Completed with Flush Device Plate No. 491.

Fig. 96. These views show the various steps in installing a switch in the outlet box of a metal raceway system.

to anchor it to them. Fig. 96 shows how these boxes are installed and the switches mounted in them.

Fig. 97 shows a number of other fittings for various uses as their descriptions indicate.

Metal molding can also be bent to fit or go around various corners or obstructions. For this purpose a bending tool, such as shown in Fig. 98, is used. This device has a rounded fitting on its handle, to make the molding bend in a neat curve of the proper size and without flattening. Molding is easy to bend because of its thin walls.

66. NEAT APPEARANCE

Fig. 99 shows the neat appearance of a run of metal molding to two ceiling light fixtures. This view shows that it is one of the best appearing of all exposed systems of wiring.

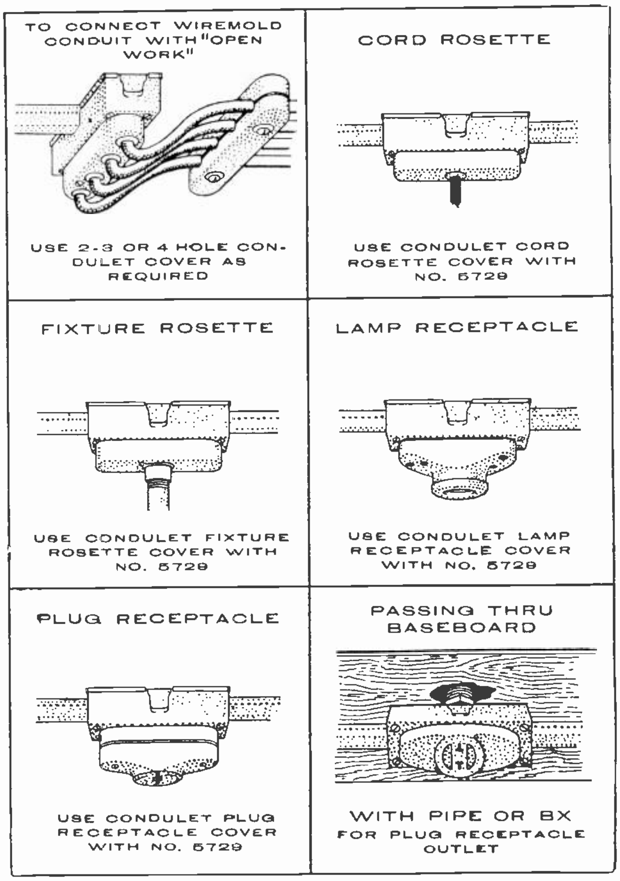

TO CONNECT WIREMOLD CONDUIT WITH "OPEN WORK"

USE 2-3 OR 4 HOLE CONDULET COVER AS REQUIRED

CORD ROSETTE

USE CONDULET CORD ROSETTE COVER WITH NO. 5729

FIXTURE ROSETTE

USE CONDULET FIXTURE ROSETTE COVER WITH NO. 5729

LAMP RECEPTACLE

USE CONDULET LAMP RECEPTACLE COVER WITH NO. 5729

PLUG RECEPTACLE

USE CONDULET PLUG RECEPTACLE COVER WITH NO. 5729

PASSING THRU BASEBOARD

WITH PIPE OR BX FOR PLUG RECEPTACLE OUTLET

Fig. 97. Above are shown a number of fittings used with metal molding and an explanation of the use of each.

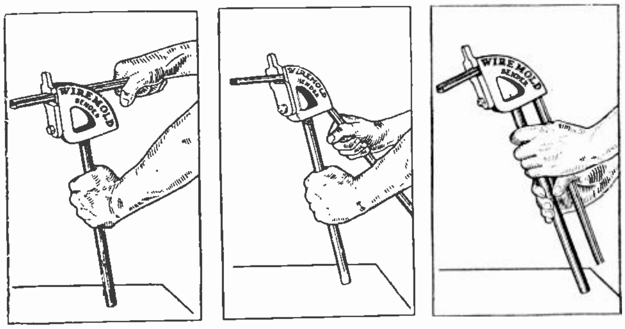

Fig. 98. This view shows a bending tool, and the method in which metal molding can be bent into different shapes for turns and corners.

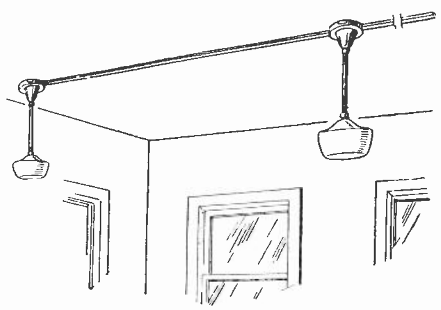

Fig. 99. Section of a metal raceway wiring system with two light fixtures attached. Note the neat appearance of this type of wiring for exposed work.

The method of attaching a fixture canopy to the ceiling plate and fixture stud, is shown in Fig. 100, and Fig. 101 shows how connections are made to the running wires, for drop cords and light fixtures. Note the porcelain connector block used to attach the fixture wires to the running wires by terminal screws instead of splices.

Fig. 102 shows the installation of a convenience outlet and the method of attaching a piece of BX to the same box, to run to a wall light fixture.

67. UNDERFLOOR RACEWAYS

These are runways considerably larger than metallic tubing, and are restricted about the same way, including the voltage, size of wire, and fuse limits. In addition, not more than 10 wires can be placed in any one raceway and the combined cross-sectional area of all conductors must not exceed 30% of the interior cross-sectional area of the raceway. These raceways may be either rounded or rectangular, and may be run exposed or embedded in concrete floors, provided the structure is not weakened by their use. The upper surface of flat top ducts cannot be over 4" wide. They may be either open-bottom or closed-bottom types, and all joints and edges must be filled with a water-proof cement. The usual requirements of other metal systems, that there be an electrical continuity of the raceway throughout and that it be grounded, must be strictly observed.

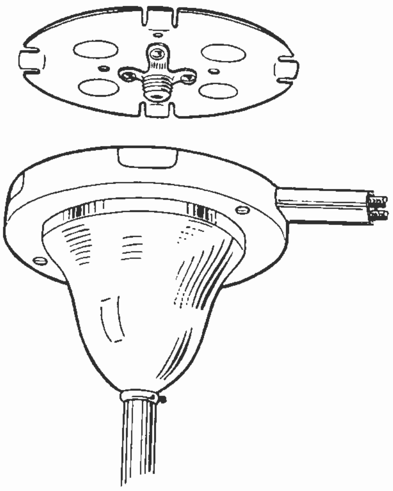

Fig. 100. This sketch shows the ceiling plate and fixture stud to which the light fixture and canopy are attached, and also the slots for attaching the molding to this plate.

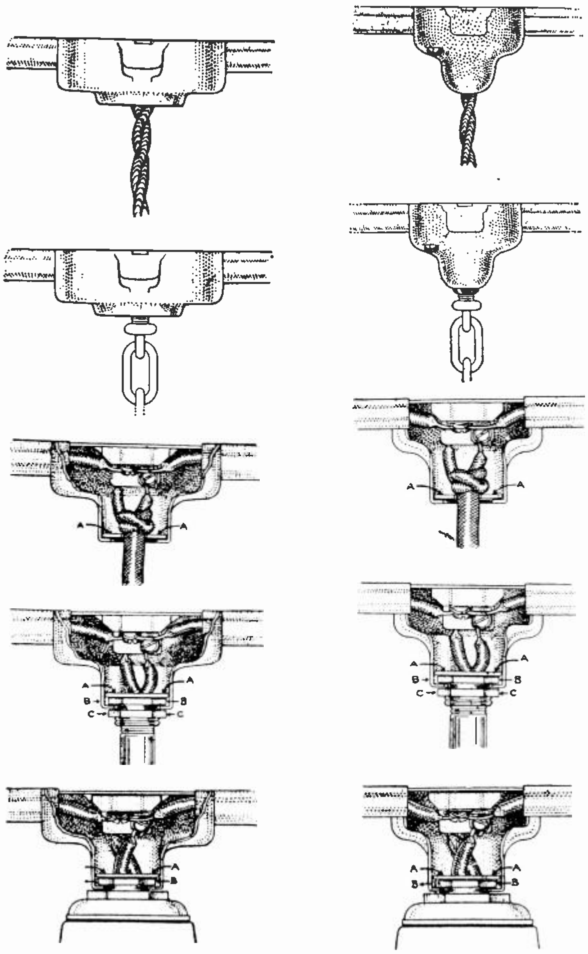

Fig. 101. The above views show a number of styles of fittings used with metal molding and the method of making connections for fixtures. Note the connector blocks used for attaching fixture wires to the running wires.

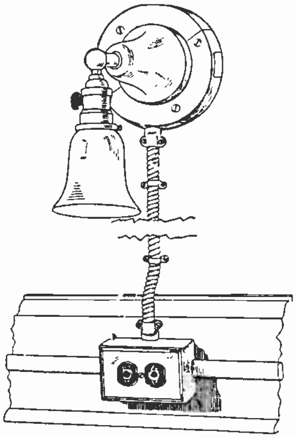

Fig. 102. Convenience receptacle and box on a metal molding system, showing BX attached for a branch circuit to a light.

COYNE
Electrical School
CHICAGO ~~ ILLINOIS

ESTABLISHED 1899

ELECTRICAL CONSTRUCTION
AND
WIRING FOR LIGHT AND POWER

Section Two

Fuses and Switches
Three-Wire Systems, Polarized Wiring
Wire Calculations, Installation Methods
Business Methods and Estimating
Trouble Shooting

FUSES AND SWITCHES

68. FUSES

Every wiring system, no matter what type it may be, must be properly fused. This is a strict requirement of the National Code, and an absolute necessity, both to protect the wiring and equipment on the circuits as well as persons who might handle them.

Fuses in electrical circuits are similar in purpose to safety valves on steam boilers. With a boiler, whenever the steam pressure rises so high that it is unsafe and more than the strength of the boiler should stand, the safety valve opens and relieves this pressure. In electrical circuits, whenever the current load becomes more than the wires can stand without overheating and burning their insulation, the fuse blows and disconnects the circuit. So we can readily see the great importance of having in every electrical system fuses of the proper size and type.

Fuses are made in many different styles and sizes for different voltages and current loads, but they all operate on the same general principle, that is, opening the circuit by melting a piece of soft metal which becomes overheated when excessive current flows through it.

The temperature rise which melts a fuse depends upon the amount of excess current, the duration of excess current, and the ease with which heat escapes from the fuse.

69. LEAD LINK FUSES

Early types of fuses were simply a piece of lead wire connected in the circuit, through which current flowed to the lines and devices to be protected. This lead wire, being soft and easy to melt, would blow out as soon as the current load in amperes went above a certain amount. These pieces of wire were kept short and fastened securely under terminal screws, so that their resistance would not be high enough to cause much voltage drop in the circuit. By selecting the proper size of lead wire they could be made to open the circuit at almost any desired current load. This type of **Link** or lead wire fuse is not very safe or dependable. Such fuses have a tendency to oxidize and corrode, and become quite inaccurate after being in service a while. In addition to this, when they do blow out, the molten metal spatters over equipment, and is likely to injure persons if they are nearby.

70. CARTRIDGE FUSES

You will still find lead link fuses in use in some places, but in general they have been replaced by the modern **Cartridge Fuses** on all circuits of over 30 amperes capacity, and some of less; and by the **Plug Fuse** on circuits with under 30 amperes load.

Fig. 103 shows two types of cartridge fuses and the renewable fuse link used with them. This type of fuse consists of a hard fibre cylinder in which the fuse strip of soft metal is contained. This strip is gripped tightly by the brass ferrules on the end of the fuse chamber, so the entire cartridge can be conveniently mounted in a **Fuse Block.** Several types of these are shown in Fig. 104.

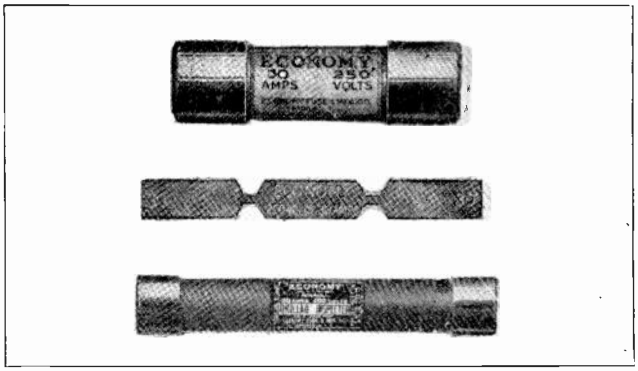

Fig. 103 The above view shows two types of cartridge fuses and one of the fusible lead links which are used inside these cartridges.

The fuses are held in the blocks by spring clips which grip the metal ferrule at the end of the cartridge. This makes them very easy and quick to renew when one blows out. The cartridge fuse is much more reliable and accurate because the fuse link is enclosed in the cartridge, and its temperature is not affected by air currents as is the open fuse link.

With a cartridge fuse, when the link blows out the arc or flame and molten metal are all confined within the cartridge, except in very rare cases when a heavy short circuit may cause the cartridge to explode.

Most cartridge fuses are of the renewable type in which the burned out link can be quickly replaced by unscrewing the ferrules or caps at the ends. The burned piece can then be removed and a new link inserted, the ends being folded over and securely gripped by the caps when they are screwed back on, or held under bolts on the knife blade type. The cost of this renewal link is very small, and as the cartridge very seldom needs to be replaced, the proper fusing of circuits is of very small expense compared with its protection value.

Fig. 104. These porcelain fuse blocks are equipped with spring clips in which the cartridge fuses are held.

71. "CUT-OUT" BLOCKS AND KNIFE BLADE FUSES

The porcelain blocks for holding the fuses are often called **Cut-Out Blocks.** The smaller fuses are used in circuits up to 60 amperes and are made in the ferrule type, or with the round end caps. Large sizes for from 65 to 600 amperes are made in the knife-blade type, with short flat blades attached to the end caps. These blades fit into clips on the fuse block, which are similar to regular knife switch clips. This type of construction is used on the heavier sizes because it gives a greater area of contact surface at the clips for heavy currents to flow through. Fig. 105 shows two knife-blade type cartridge fuses.

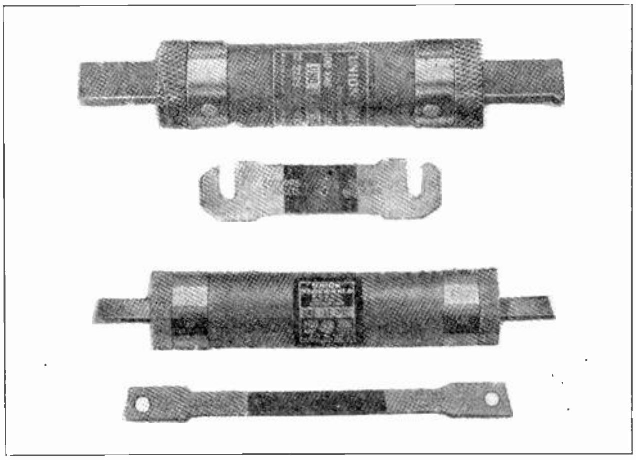

Fig. 105. For the heavier loads of current, knife blade type cartridge fuses of the above type are used.

Ferrule type fuses for voltages from 250 to 600 are commonly made in the following ampere ratings: 3, 5, 6, 10, 20, 25, 30, 35, 40, 50, and 60.

Knife-blade type fuses for the same voltages are made with current ratings of 65, 70, 75, 80, 90, 100, 130, 125, 150, 175, 200, 225, 250, 300, 350, 400, 450, 500, 550, and 600.

72. PLUG FUSES

Plug fuses are made with ampere ratings as follows: 3, 6, 10, 12, 15, 20, 25, 30. These plug fuses are the type most commonly used for fusing branch circuits in house wiring systems. They are made with a threaded base to screw into a socket in the cut-out block, similar to lamp sockets. Several types of plug fuses are shown in Fig. 106. Those in the top row are ordinary fuses with a small mica window, so it is easy to see when they have been blown. The fuse shown below with an extra element is of the renewable plug type. These fuses when blown can be taken apart and the small link replaced similarly to the renewal of the cartridge fuses.

Fig. 107 shows several types of cut-out blocks for plug fuses.

When any circuit is overloaded a small amount beyond the capacity of its wires and fuses, the fuses gradually become warmer and warmer, until the link melts out and opens the circuit. When a circuit becomes severely overloaded or a short circuit occurs, the fuse blows instantly, and sometimes with considerable flash. This is as it should be because, if fuses didn't blow at once, a short circuit would very quickly ruin the insulation of the wires with the intense heat of the great rush of current.

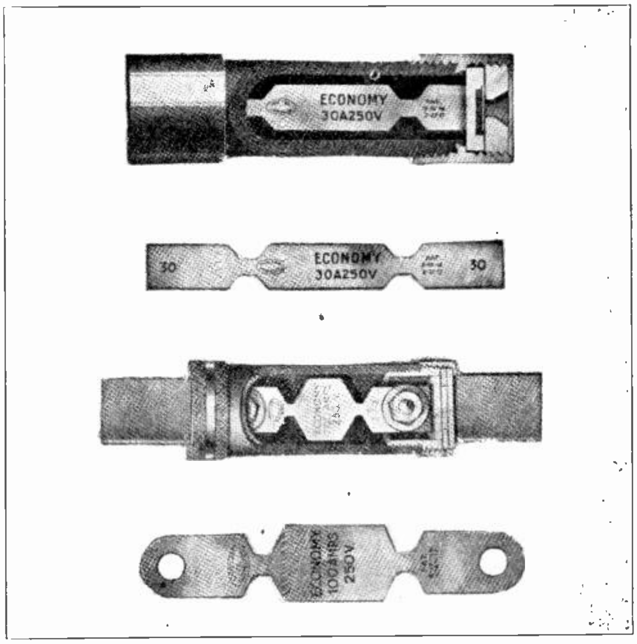

Fig. 105-B. These sectional views show the construction and arrangement of cartridge fuses and the manner in which the fuse strips are fastened in them. Note the difference in the mounting of this strip in the upper and lower cartridges.

73. NATIONAL CODE RULES ON FUSES

In general, every electrical circuit and system should be protected by fuses of the proper size connected in series with its lines, and care should be used never to allow fuses to be replaced with others that are too large. The National Code is very strict in the matter of fusing circuits and a few of the most important rules are as follows:

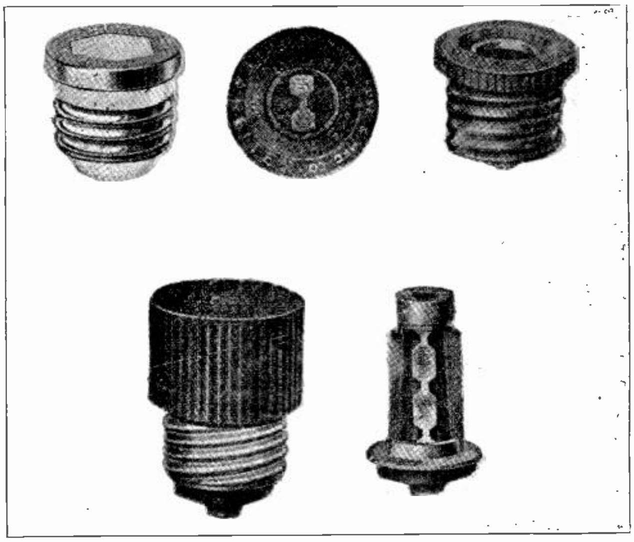

Fig. 106. The three fuses in the upper row are of the ordinary plug type with fusible windows to show when the link is blown out. The lower view shows a refillable plug fuse and one of its refill elements.

1. Fuses must be provided at every point where the wires of a system change in size, except when fuses closer to the service are small enough to protect these wires.
2. Fuses on fused switches must be placed on the dead side of the switch when it is open.
3. Every ungrounded service conductor should be provided with a fuse, except the neutral wire of a three-wire system, which must never be fused at any point.
4. All ungrounded wires of branch circuits should be protected by fuses.
5. Two-wire branch circuits on ungrounded systems must have both wires protected by a fuse in each wire.
6. Ordinary branch circuits must be protected by fuses not larger than 15 amperes at 125 volts, or 10 amperes at 250 volts.

Sometimes, when a fuse blows, some person who doesn't understand the function and safety value of a fuse may replace it with a piece of copper wire or in some cases even put pennies behind plug fuses. This is exceedingly dangerous practice and should never be used under any circumstances, as it is practically treating the wires of an electrical system, as if the safety valve of a boiler were locked.

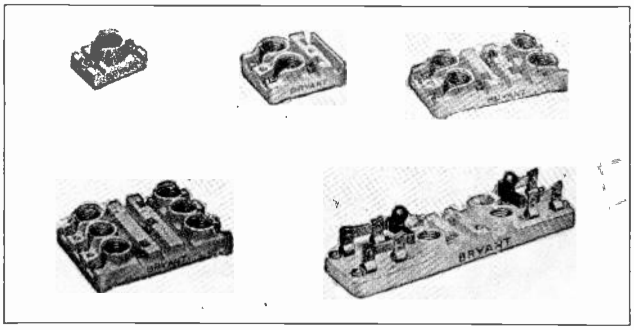

Fig. 107. Several types of "cut-out" blocks or fuse blocks for plug fuses are shown above.

When the size of fuses for any certain circuit is not specified by the Code, it can easily be determined by the use of your Watts law formula. If we know the voltage of any circuit and the load rating in watts of the equipment on this circuit, we can easily find the current in amperes by dividing the watts by the volts. This will indicate the proper size of fuses, providing we are also sure that the size of the wires is large enough to carry this load.

The table previously given, showing the current capacity of rubber covered wires, will also be a convenient guide to the selection of proper fuses. More about fuse troubles and maintenance will be covered in a later section on trouble shooting, and in the advanced sections on motors and power machinery, additional information will be given on the proper sizes of fuses for machines of different horse-power ratings.

74. PANEL BOARDS AND FUSE CABINETS

In small house-wiring systems, the fuses are usually placed at the place where the supply wires enter the house and near the service switch and meter.

In some small homes there may be only one circuit and one pair of fuses, and in larger homes or those better equipped with complete electric wiring there may be from 2 to 6 or more branch circuits and fuses. Fig. 108 shows two types of fuse blocks and safety switches in metal boxes. This is the modern and approved way to install them.

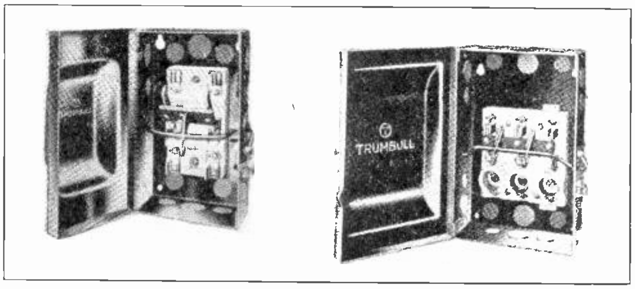

Fig. 108. Fuse blocks of either the cartridge or plug fuse type are commonly mounted with a safety switch in metal boxes.

In larger buildings—such as apartment houses, stores, and offices—there may be from a dozen to a hundred or more branch circuits, all requiring separate fusing.

In such cases it is common practice to install in one central cabinet all the fuses for a large group of circuits. Fig. 109 shows two such cabinets, one for a two-wire system and one for three wires. Both have main service switches which disconnect the entire cabinet and all circuits from the supply wires, and also separate switches and fuses for each circuit. The branch circuit switches in these cabinets are enclosed under safety panels through which only the handles protrude.

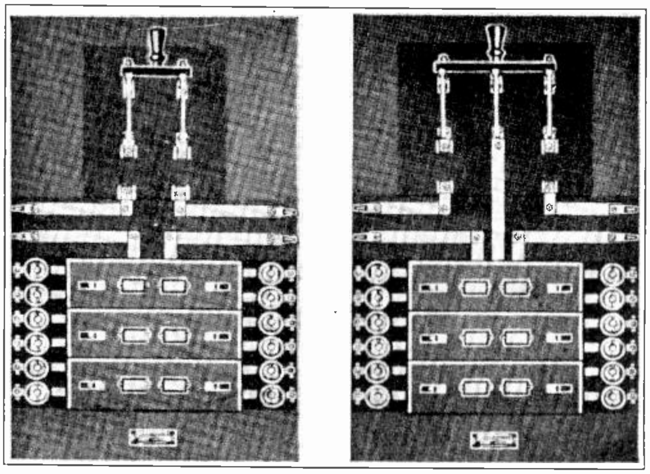

Fig. 109. On the left is shown a two-wire "cut-out" panel, and on the right one for three-wire circuits. Note the arrangement of the safety switch, plug fuses, and branch circuit switches.

Fig. 110 shows a modern fuse cabinet and metal panel of the type used in many large apartment buildings and offices, and Fig 111 shows a connection diagram for an entire cabinet of this type, including the meters.

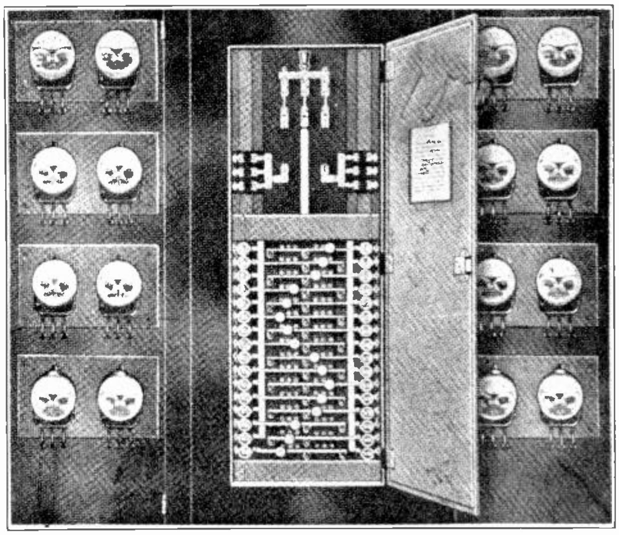

Fig. 110. This is a modern fuse and meter panel for large buildings which have a great number of branch circuits.

75. SWITCHES.

There are numerous types of switches used in electrical wiring. It is very important to select the proper types for various applications and to properly understand their use, operation and care.

The purpose of any switch is to conveniently and safely make and break an electrical circuit and start or stop the flow of current, thereby controlling the operation of the devices on that circuit.

76. KNIFE SWITCHES

Knife Switches are one of the most common types and are used for opening and closing the heavier circuits, such as main service wires in light and power wiring systems, and also branch circuits to motors and equipment using large amounts of current.

Knife switches consist simply of one or more copper blades hinged at one end and with clips at the other, and proper terminals for connecting the wires to them. Fig. 112 shows three common types of knife switches. One is called a **Single Pole,** one a **Double Pole,** and one a **Three Pole** switch. The number of poles indicates the number of blades, or the number of wires the switch can open. They are also made with 4 poles or more, and **Single** or **Double Throw.** Those shown in the figure are all single throw. Double throw switches have two sets of clips, one at each end, so the blades can be thrown either way into either set of clips, thus shifting from one circuit to another.

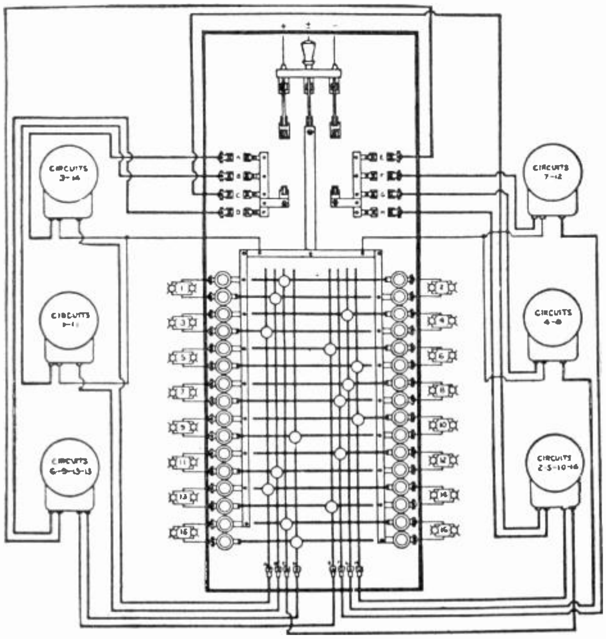

Fig. 111. Wiring diagram for modern fuse and meter cabinet.

Knife switches are made with or without fuse clips as desired. The three pole switch in Fig. 112 is of the fusible type, while the other two switches are not.

When installing knife switches, they should be mounted so that the blades when opened cannot fall closed by gravity, and they should be connected so that when opened the blades as well as any fuse that may be on them will be dead. The blades of knife switches should always be enclosed, except when the switches are mounted on approved switch boards or panel boards.

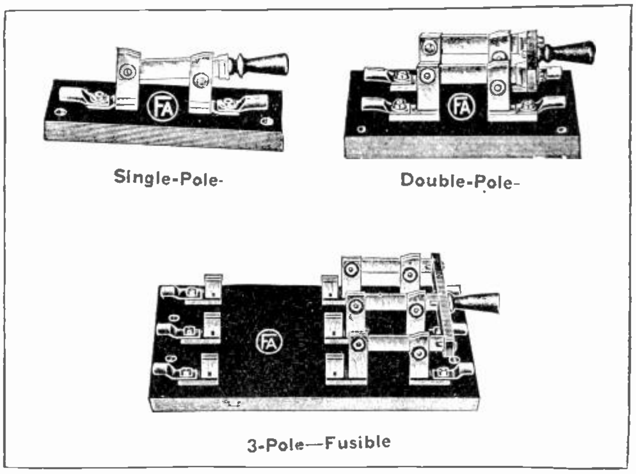

Fig. 112. Three common types of knife switches. The lower one is equipped for knife blade type fuses. Note the lugs which are used for attaching large wires or cables to these switch terminals.

Knife switches that are enclosed in a safety box and used for service switches in wiring systems should have a handle on the outside of the box, so the switches can be opened or closed without opening the door, and some indication or marks should be on the box to show when the handle is in the open or closed position.

Switches used for motor circuits should have a current capacity or continuous duty rating of 125% of the motor blade current rating.

It is very important that the clips of knife switches be kept properly fitted to the blades, so as to secure proper contact and prevent overheating of the switch due to high resistance.

77. SNAP SWITCHES

For the control of lights and branch circuits the **Snap Switch** is commonly used. There are several types of snap switches made, and their name comes from the quick snapping action with which they break the circuit. This action is obtained by a small spring and is a very important feature of such small switches, as the speed and suddenness with which it opens the circuit extinguishes the arc much more rapidly and effectively, thus to a great extent eliminating fire hazard and preventing burning of the switch contact.

Snap switches are made in **Single Pole, Double Pole, Three Way, Four Way,** and **Electrolier** types. Each of these types will be explained.

78. SURFACE TYPE SNAP SWITCHES

One of the very common and simple types of these switches is the **Surface Type Snap Switch.** Fig. 113 shows two switches of this type, one of them having the cover removed to show the working parts.

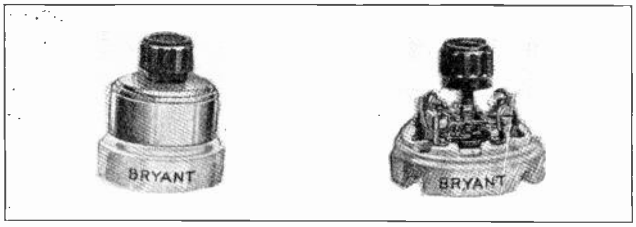

Fig. 113. Above is shown an ordinary surface type snap switch. The view on the right shows the cover removed.

These switches have a small rotating blade that is snapped in or out of stationary clips set on the porcelain base. When the button is turned it first winds a small coil spring on its shaft, and as it is turned farther this spring snaps the rotating blade in or out of the stationary clips.

For convenient connection of the wires, terminal screws are provided. These screws are of soft brass. While they should be tightened enough to hold the wires securely, they should not be forced too tight or their threads are likely to be stripped.

Fig. 114 shows several types of surface type snap-switches.

Surface type **Toggle** or **Tumbler** switches are being installed in preference to rotary button snap switches in many places today. Fig. 115 shows a surface type toggle switch on the left and two of the tumbler type on the right. These switches are more convenient to operate, as it is only necessary to push their levers up or down, instead of twisting a button as on the rotary snap switch.

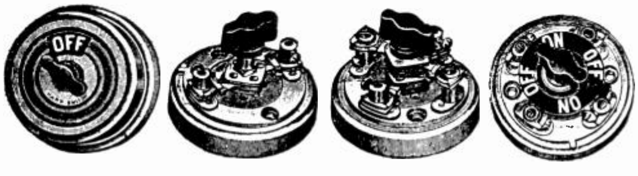

Fig. 114. Several types of snap switches. Note the "off" and "on" markings used on indicating switches.

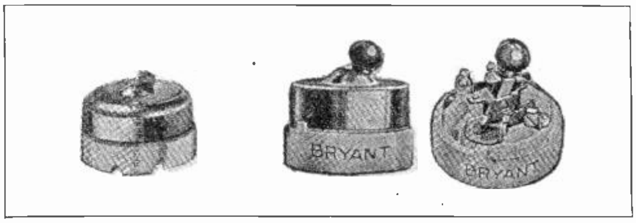

Fig. 115. Toggle and tumbler switches of the above type are very commonly used for surface mounting.

79. FLUSH TYPE SWITCHES

The snap switches mentioned so far are called "surface" type, because they are made to mount right on the surface of the wall. This is often not as desirable in appearance as the **Flush Type** switch, which mounts in an opening cut in the wall, has a neat flush cover plate, and is a very popular type. Fig. 116 shows two views of a **Push Button** type switch. The left view shows an open side view and the manner in which the two buttons are used to rock a small blade back and forth. The right view shows the top of a switch of this type.

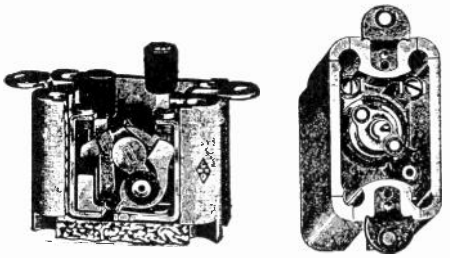

Fig. 116. These two views show the construction and mechanism of push button type snap switches.

Fig. 117 shows another type of push button switch on the left, and a toggle switch on the right. The metal extensions or "lips" on these switches are used to fasten them in the switch box, which is mounted in a hole cut in the lath and plaster. Then the switch plates, or covers, are placed over them and fastened in place with small screws, presenting a finished appearance as in Fig. 118.

Where it is desired to control a separate light by means of a switch on the ceiling near that light, a ceiling pull-cord switch, such as shown in the left view in Fig. 119, is used. The one on the left

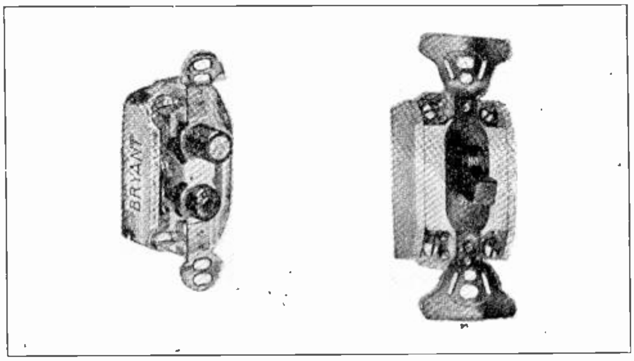

Fig. 117. Above are shown a push button switch on the left and a toggle switch on the right. Both are for flush mounting in switch outlet boxes.

is made to mount right on the surface of the ceiling, while the one on the right is made to mount in the side of the outlet box or fixture canopy and is called a Levolier switch.

There are also small snap switches which are enclosed in lamp sockets called **Key Sockets** or **Pull Chain Sockets.** Fig. 120 shows a key socket on the left and a pull chain socket in the center.

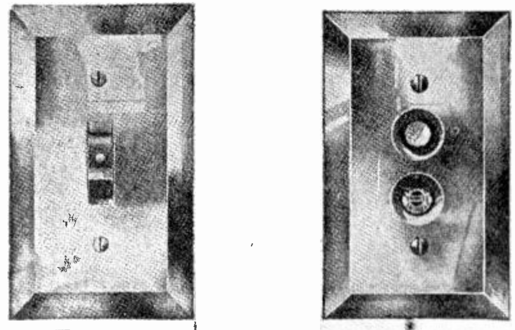
Toggle Push Button

Fig. 118. This shows the finished appearance of properly mounted flush type switches with the covers placed over the outlet boxes.

80. SINGLE POLE SWITCHES

Single Pole Snap Switches are used to break only one wire of a circuit, and **must always be connected in the ungrounded wire.** They are used to control a light from one place only, and are the most commonly used of all switches in residence lighting systems. Single pole switches can always be easily distinguished from the others because they have only two terminals for the wires, and only one blade.

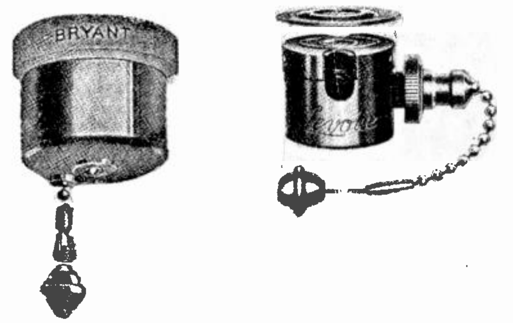

Fig. 119. Two types of pull cord switches for ceiling mounting and used to control individual lights.

81. DOUBLE POLE SWITCHES

Double Pole Switches are used to open both wires to a light or device, and thus break all connections from it to the line. Opening both sides of the circuit at once also more quickly extinguishes the arcs at the switch points. A double-pole surface-type switch always has four terminals and two blades. These blades are mounted one above the other on the shaft, and are insulated from each other. On this type of switch, never connect the line wires to opposite terminals, but always to terminals on the same side of the switch.

Fig. 120. On the left is a key socket or switch for controlling lights on drop cords. The center view shows a pull-chain socket, and on the right is a push button switch that can be mounted on the end of a suspended pair of wires.

Fig. 121 shows some of the symbols used for common surface-type snap switches, so you will be able to recognize them in the following connection diagrams.

Fig. 122 shows the connections of a single pole switch and a double pole switch for controlling the lamps, "L" and "L".

82. THREE-WAY SWITCHES

Three-Way Switches are used to control a light or group of lights from two different places, so they can be turned on or off at either switch. This is a connection very commonly used in all modern homes for lights in halls, on stairways, and other places. It is also very convenient for controlling garage, barn, or yard lights, as the lights outside can be turned on at the house and off again at the garage or barn. Or the lights can be turned on at the outer buildings and turned off at the house.

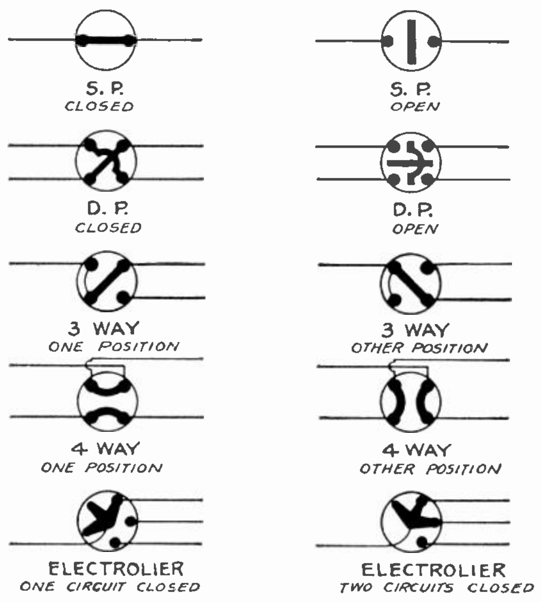

Fig. 121. The above symbols will be used to represent various types of switches in the following connection diagrams. Close examination of these symbols will also help you obtain a better understanding of each of these switches.

Three-way surface-type switches have four terminals and usually one blade. Sometimes there are two blades in one line. Two of the terminals are permanently connected together in the switch with

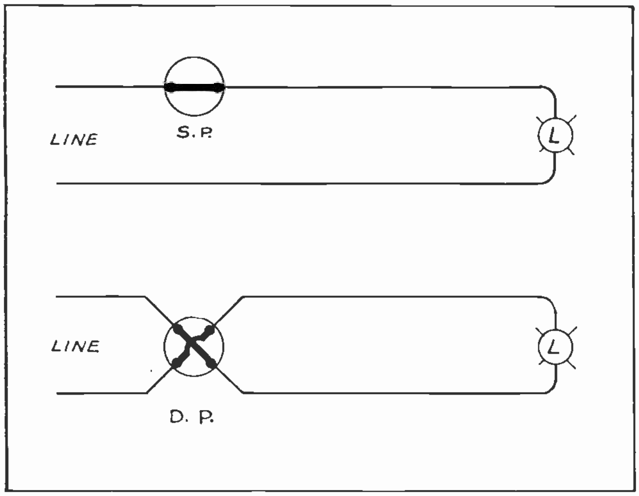

Fig. 122. The top diagram shows a simple single-pole switch connected to control one light. The lower diagram shows a double-pole switch connected to break both sides of the circuit to a light.

a shunt wire. Usually these terminals can be located by a strip of sealing wax in a groove between them on the base of the switch. This wax covers the shunt wire. This construction is one means of telling a three-way switch from other types of surface snap switches. On flush type switches, the three-way is the only one which has just three terminals.

Fig. 123 shows the connection diagram for two three-way switches used to control a light from two different points. Note that the **line always connects to the shunt terminal of one switch and the lamp to the shunt of the other switch.** The other two terminals of each switch are connected together as shown. This is a good rule to remember in connecting up three-way switches. Trace this diagram carefully and you will find the circuit to the lamp is closed. Shifting either switch blade will open it, and again shifting either one will close it once more.

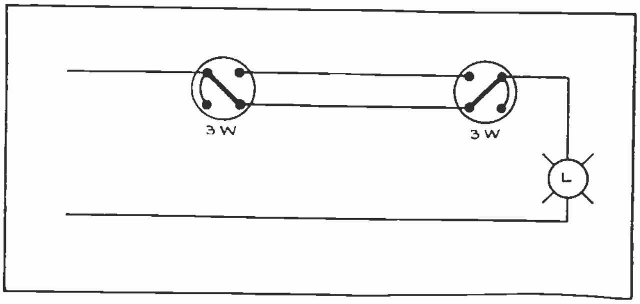

Fig. 123. Two three-way switches used for controlling a light fron two different places. Note carefully the manner of connection.

Fig. 124 shows another method of connecting three-way switches, known as the Cartweis system. This method is not approved by the Code as it places line wires of opposite polarity on adjacent terminals of the switch. This is in contradiction to the rule given for the common approved connection and is not considered as safe.

However, this method is sometimes used on 32 volt systems and saves one wire where both switches are to be located near the line wires, as in a case where a live line is run from a house to the garage or barn to operate other devices there in addition to the light.

The first system should always be followed in interior wiring in houses with 110 volt circuits.

83. FOUR-WAY SWITCHES

Four-way switches are used where it is desired to control a light or group of lights from more than two places. By their use in combination with three-way switches, we can control a light from as many places as desired.

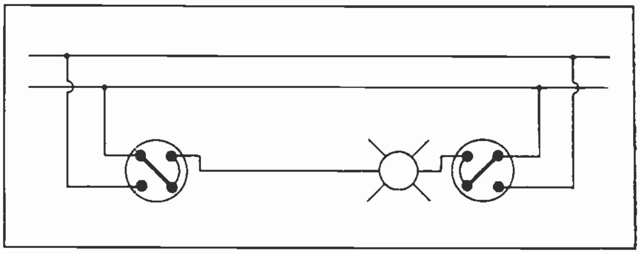

Fig. 124. This sketch shows the Cartweis system of connecting three-way switches. This method should not be used on 110-volt circuits in interior wiring.

The four-way surface-type switch has four terminals and two blades, and can be quite easily distinguished from the other switches because its blades always connect to adjacent terminals on the sides of the switch. No matter which position the switch is in, the blades always connect together one or the other set of adjacent terminals.

Fig. 125 shows a method of connecting two three-way switches and two four-ways to control a light from four different places.

The important points to note in this connection are as follows: The two three-way switches are always connected at the ends of the control group, with their shunts to the line and lamp, as before mentioned. Any number of four-way switches can then be connected in between them as shown. With surface-type snap switches, the one wire connecting the three-way and four-way switches together should **always be crossed at each switch** as shown, but the other one just connected straight through from terminal to terminal on the same side of the switches as shown. With some flush-type switches it is not necessary to cross the wires on one side of the four-ways, as they are already crossed inside the switches.

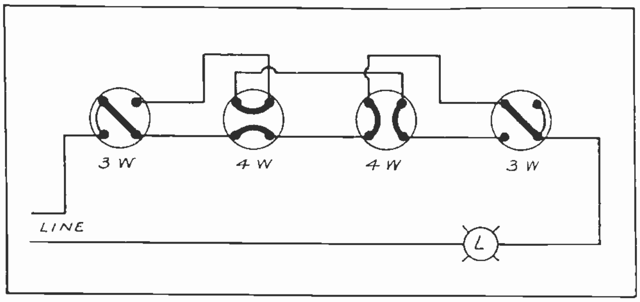

Fig. 125. This diagram shows two three-way and two four-way switches connected to control a light from four different places. Note carefully the connection and arrangement of the three-way switches at the ends, and the manner in which the wires to one side of the four-way switches are crossed.

Trace the diagram in Fig. 125 very carefully and you will find that, with the switch blades in their present position, the circuit to the lamp is closed. Moving any one of the switch blades into its other position will open the circuit, and moving any other one will close it again.

This type of connection is a very valuable one to know, and you will find it much easier to understand and remember the rules for its connection if you try drawing several combinations with different numbers of switches and tracing them out to see if they give the desired results.

A very important rule to remember in installing three-way and four-way switches is that they **must all be connected to the ungrounded wire** of the line, and never to the grounded wire. This is a Code rule, as it is with single pole switches, to make sure that the "hot" or ungrounded wire to the light is always open when the switch is turned off.

84. SUBSTITUTING VARIOUS SWITCHES

Sometimes in emergencies you may not have the proper switches on hand and certain others can be substituted temporarily if desired. For example, you can use either a three-way or four-way switch in place of a single pole switch. To use a three-way in place of a single pole, connect the line wire to the shunt terminal and the lamp wire to either of the separate terminals, as in the upper view in Fig. 126.

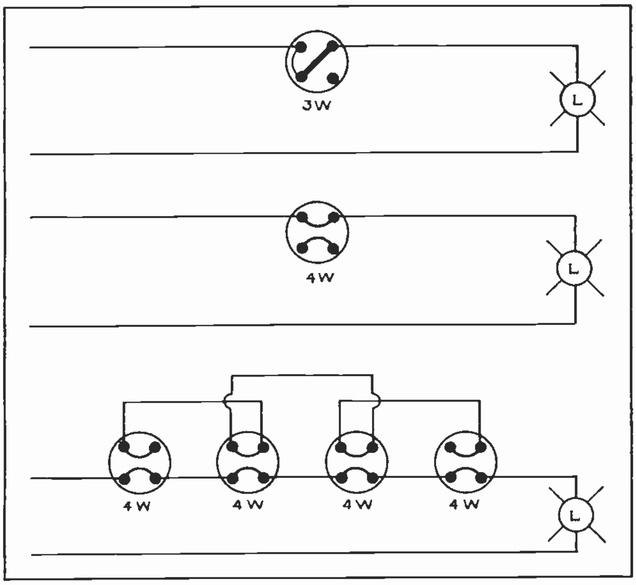

Fig. 126. The above three diagrams show methods of substituting various switches when the proper ones are not available. The top and center connections show the use of three-way and four-way switches in place of single-pole switches. The lower connection shows four-way switches used in place of three-way switches at the ends of the group.

To use a four-way switch in place of a single pole, connect the line and lamp wires to any two adjacent terminals, as in the center view in Fig. 126.

To use four-way switches in place of the usual three-ways at the ends of a group for controlling a light from several places, connect them as shown in the lower view in Fig. 126.

Some of these switches will cost more than the proper ones for which they are substituted—for example, three-way and four-way switches cost much more than single pole switches—so these substitutions should only be made in emergencies.

85. ELECTROLIER SWITCHES

Electrolier Switches are used to control one or more circuits, such as several lights on a chandelier, or the several sections of a heater element in an electric range, etc. These switches are obtainable with two or three circuits. Fig. 127 shows a method of connecting a three-circuit electrolier switch to turn on one, two, or all three of the lamps; or turn them all off if desired. In the upper view all lamps are out, in the center view only one lamp is on, and in the lower view two lamps are on. If the rotating element of the switch were turned one more point to the right all three lamps would be on.

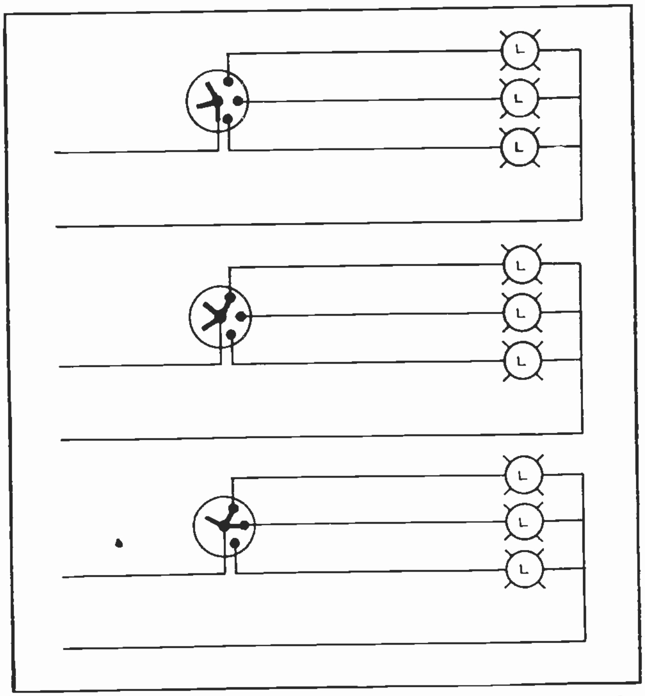

Fig. 127. These three diagrams show the manner in which an electrolier switch can be used to turn on one or more lights at a time.

These switches are very commonly used on electric ranges and heaters, to get low, medium, or high heat.

Fig. 128 shows several of the connections for push button and toggle-type flush switches. The sketch at "A" shows the terminal location and connections of a single-pole push button switch connected to control one lamp. "B" shows the terminals and connections of another type of flush single-pole switch. "C" shows a double-pole switch connected to control one lamp. "D" shows two flush-type, three-way switches connected so that either one can turn the light on or off. "E" shows two three-way switches and one four-way switch connected to control a light from three places. The wires are crossed at the four-way switch, as is necessary with some types of flush four-ways. "F" shows the connection of two three-ways and one four-way, using the type of four-way switch that has its terminal connections crossed inside, so the wires are run straight through. "G" shows a flush-type two-circuit electrolier switch with connections made to its marked terminals for turning on first one light, then both lights, then both off. "H" shows a two-circuit electrolier switch connected to first turn on one light, then turn it off; next turn on the second light, and then turn it off. "I" shows a three-circuit electrolier switch connected to first turn on one light, next turn on two lights, next all three lights on; then all off.

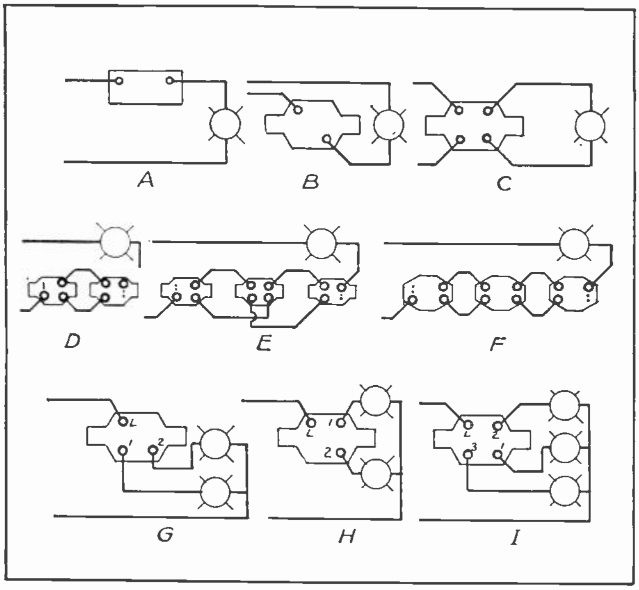

Fig. 128. The above sketches show methods of connecting flush type switches as represented by manufacturers' symbols. Check each connection with its explanation in the accompanying paragraphs.

A great many types of special switches are made for different applications. However, with a good understanding of these more common types, and a careful examination of the blades, terminals, and parts of any switches you may encounter, you should be able to understand them quite easily.

Sometimes the small copper blades and clips of snap switches become badly burned from the arcing when the circuit is interrupted or flamed, because they don't fit properly and make good contact with each other.

Snap switches are made in different current ratings according to the load they are supposed to control, and they should never be placed in circuits where they have to carry more current than they are rated for, because this will overheat them, burning and softening the blades and clips until they are useless. Any snap switch that arcs badly or sticks frequently is usually an indication of a defect in the switch or an overload on it.

86. CONVENIENCE OUTLETS AND RECEPTACLES

In the preceding pages we have occasionally mentioned outlet boxes for convenience receptacles. A modern house-wiring system is not merely to supply proper lights and convenient control for them, but should also include in all rooms a sufficient number of convenience outlets for the attachment of portable household electrical devices, such as fans, heaters, curling irons, dusters, sewing machines, vacuum cleaner, and the many other electrical devices used in the home today. These convenience outlets are usually installed in the baseboard, although sometimes they are mounted higher up in the walls, or even in the box with the switches.

The same outlet boxes can be used as are used for flush-type switches, and either a single or double plug receptacle can be installed. Fig. 129 shows both a single and a double receptacle of this type, with the cover plates which fit over the outlet boxes.

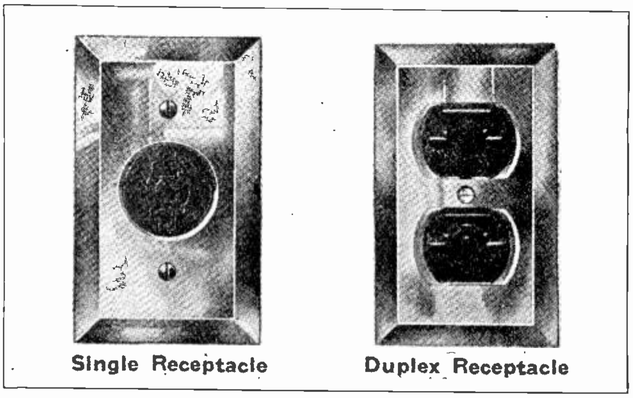
Single Receptacle **Duplex Receptacle**

Fig. 129. Every home that is wired for electricity should have a sufficient number of convenience outlets or receptacles of the types shown above.

Fig. 130 shows the receptacles without covers and ready to be installed in the outlet boxes. The metal "lips" on the ends of each one are for attaching them to the outlet boxes with screws. These receptacles are connected to wires that are always live and are not controlled by switches. All that is necessary to obtain from them current for portable devices is to push the prongs of the plug, which is on the end of the cord, into the slots in the receptacle, where they are gripped by spring contacts inside.

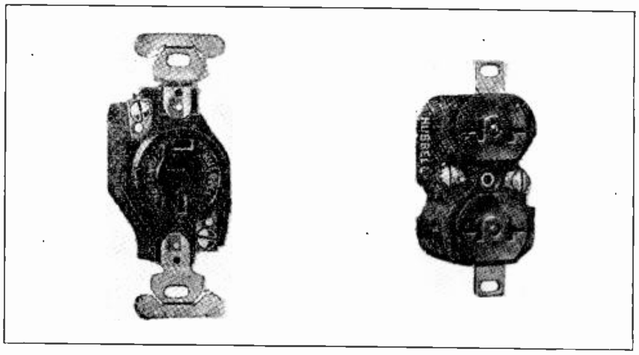

Fig. 130. These receptacle units are mounted in ordinary outlet boxes similar to those used for flush type switches. Note the terminal screws for connection of the wires to the receptacle, and also the metal "ears" for attaching the receptacle to the outlet box.

86-A. ATTACHMENT PLUGS

Small receptacle plugs can be obtained for screwing into threaded lamp sockets, and to them we can then attach the regular cord plug. These are commonly known as attachment plugs. Fig. 131 shows both sections of an attachment plug; close together in the left view, and separated at the right. The upper or male cap section in the right-hand view has two connection screws on its prongs, and can be quickly and easily attached to the cord of a portable device.

For certain portable tools requiring three and more wires, special plugs can be obtained. Some of them also have an extra wire for grounding the portable tool to the conduit system for safety to the operator.

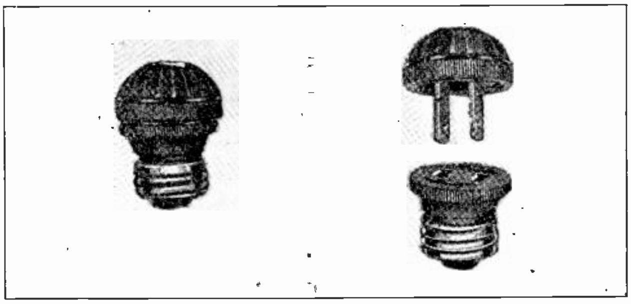

Fig. 131. Two views of an attachment plug of the type which can be screwed into a socket. The male element with the two brass prongs is attached to the cords of portable devices, and can then be plugged into any receptacle of this type

THREE-WIRE SYSTEMS

86-B. TWO-WIRE AND THREE-WIRE SYSTEMS

We have already mentioned that wiring systems can be either two-wire or three-wire systems.

The two-wire system does not need very much explanation as its connections and principles are very simple. They are the ones commonly used in small homes, and consist of the two main wires brought into the building from the power company's lines, and properly equipped with service switch, fuses, and meter.

From this point several branch circuits with two wires each can be run to the various groups of lights or outlets about the house. Two-wire lighting circuits are usually of 110 volts or about that, and two-wire D. C. or A. C. power circuits are usually of 220 volts.

It is a very simple matter to connect lights or motors to these circuits, with the proper switches and fuses where needed. The load devices are all connected in parallel, and while usually we need pay no attention to positive or negative polarity, we do need to know which wire is the grounded one and which the ungrounded. This will be explained a little later.

87. EDISON THREE-WIRE SYSTEM

The three-wire system is used extensively by power companies on their lines to the customers' buildings, and in most all of the larger homes and modern office buildings, hotels, stores, and factories.

This system is often thought to be somewhat complicated but in reality it is very simple to understand for anyone with a knowledge of the principles of electric circuits, such as you have already obtained.

The Edison three-wire system gets its name from the fact that it was originally used by Thomas Edison, who connected two 110 volt D. C. generators in series to obtain 220 volts between two outside wires, and 110 volts between each outside wire and the center or **neutral** wire. See Fig. 132.

You will recall that when any two generators or sources of current supply are connected in series, it adds their voltages; so it is easy to see how the two different voltages are obtained in this syster

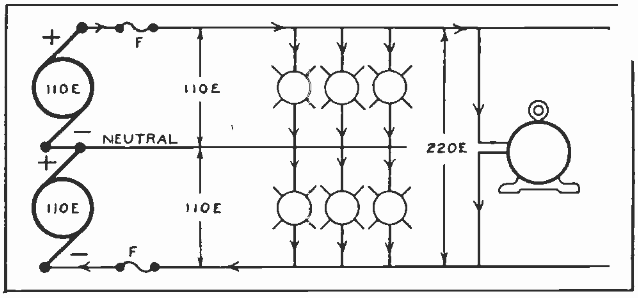

Fig. 132. This diagram shows the arrangement of two generators in series to supply an Edison three-wire system. Note that this arrangement provides both 110 volts for lamp circuits and 220 volts for motor circuits.

The advantages of the three-wire system are that it provides 110 volts for lights and 220 volts for motors, with only three wires, and it effects a great saving in the size of conductors and copper costs even when used for lighting alone. This is because when there is an equal number of lights on each side of the system, they all really operate on 220 volts, with two groups of lamps in series across the outside wires.

The current tends to flow through both generators in series and through both groups of lamps in series, and no current will flow in the neutral wire, as long as the number and size of lamps is equal on each side of the system.

88. SAVING IN COPPER BY USE OF THREE-WIRE SYSTEM

With the lamps operating at 220 volts and two in series, they require only one-half as much current in amperes to supply their rated voltage, as they would if they were operated on 110 volts. Therefore, smaller wires can be used and we find that this system saves over 50 per cent of the wire cost, except on certain small circuits where the Code requires a certain minimum size of wire.

The simple sketch and problem in Fig. 133 will illustrate how this reduction of current is obtained. We will use even figures of 100 volts and 200 volts to make them easy to follow. In "A" we have six 100 volt lamps of 200 watts each. The total wattage of the six lamps will be 6 x 200 or 1200 watts. The current required for this wattage will be W ÷ E or 1200 ÷ 100 = 12 amperes, which will be the load on the wires. In "B" the lamps are connected two in series and each of these pairs connected across the 200 volt wires.

The total wattage of the lamps remains the same, or 1200 watts, and now the current will be W ÷ E again or 1200 ÷ 200 = 6 amperes. So with this connection the wires only need to carry one-half as much current.

This can also be checked in another way as follows: We know that the current required by each 100 volt, 200 watt lamp will be 200 ÷ 100 or 2 aperes. So when they are all connected in parallel will require 12 amperes to operate them. But ien they are connected as at "B", the same two nperes which lights the upper lamps must pass a through the lower one as well, so it now requires only 3 × 2 or 6 amperes, at 200 volts.

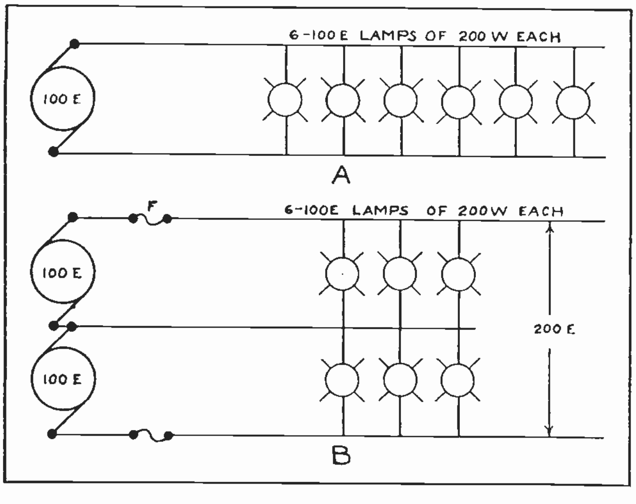

Fig. 133. By the use of Watts law determine the current required for the six lamps on 100 volts in the upper circuit; then determine the current required on the three-wire system below with the lamps apart on 200 volts and in groups of two in series. This will show the reason for considerable saving in the size of the wires on three-wire systems.

89. UNBALANCED SYSTEMS

So far we have considered only a balanced load condition where no current flows in the neutral wire. Now let's see what will happen if the load is unbalanced or if one of the lamps is turned out on the upper side of the system in Fig. 133-B. We will illustrate this separately. In this case the lower side will require 6 amperes and the upper side only 4 amperes. Two amperes will now flow out along the neutral wire from the lower generator, to make up this shortage. The upper generator supplies 4 amperes which flow through both groups of lamps and through the lower generator as well; and the lower generator supplies 6 amperes, four of which still flow through the outer wires and both groups of lamps, and two of which flow through the neutral and lower wires and lower groups of lamps only. The generators automatically assume their proper share of load whenever the load balance changes. Note the size of the current arrows which show this division of current. This is due to the fact that the resistance and the voltage drop of each group of lamps vary with their number.

For example, if the lamps in Fig. 134 are all 100 volt, 200 watt lamps their resistance will be 50 Ohms each. Then, according to our rule for finding the total resistance of a parallel group, that of the two upper lamps will be 50 ÷ 2 = 25 Ohms resistance between wires "A" and "B". The total resistance of the three lower lamps in parallel will be 50 ÷ 3 or 16⅔ Ohms between wires "B" and "C".

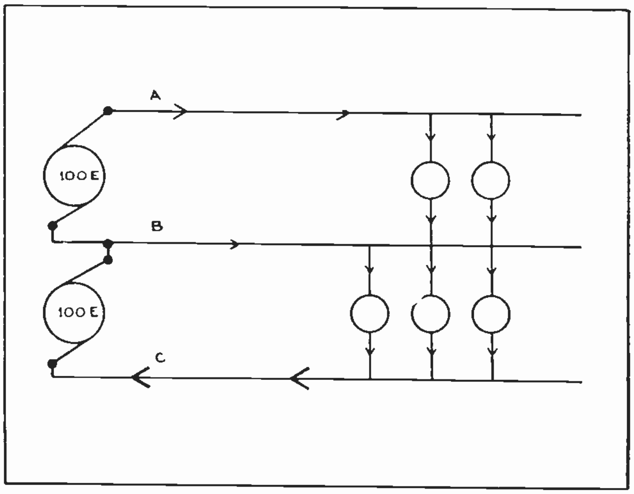

Fig. 134. This sketch shows an unbalanced three-wire system. Note carefully the division of current between the two generators and circuits and the direction of current flow in the neutral wire.

Each generator delivers 100 volts, so that is the voltage applied to each group of lamps. The current through the upper group will be E ÷ R or 100 ÷ 25 = 4 amperes. The current through the lower group will be 100 ÷ 16⅔ = 6 amperes. So we find that a simple application of Ohms law explains why the generators will each automatically supply their proper share of the current load.

The amount of current flowing in the neutral wire will always be in proportion to the amount of unbalanced load, and it may be in either direction according to which side of the system is the more heavily loaded.

90. "SOLID NEUTRAL" FOR THREE-WIRE SYSTEMS

The ideal condition for a three-wire system is to have no current flowing through the neutral, so we should always try to keep the load as evenly balanced as possible when connecting up the two-wire branch circuits to the three-wire mains.

Of course, it is impossible to keep such a system perfectly balanced at all times, because of lights and devices on the different circuits being turned on and off. This is the reason we need the neutral wire, and also one of the reasons the Code requires that on the modern polarized system the neutral must **not have in it any fuse**, which might open it at any time. This is the reason it is often termed a **Solid Neutral.** Many of the older non-polarized systems, however, have fuses and switches in the neutral.

91. EFFECTS OF OPEN NEUTRAL AND UNBALANCED LOAD

Now let's see what will happen in such a system if the neutral were fused and this fuse blew out while the load was unbalanced. In Fig. 135 we normally have a balanced load of eight lamps when all are turned on, but at present two in the upper group are turned off and the fuse in the neutral is blown.

Assume that the lamps are each of 100 Ohms resistance, and let's find out how much current will be flowing through the six lamps with 200 volts applied by the two generators in series, and their neutral open.

The resistance of the upper and lower groups of lamps being unequal, we must first figure that of each group separately and then, as the two groups are in series, we will add them to obtain the total resistance of all the operating lamps.

The resistance of the upper two lamps in parallel will be 100 ÷ 2 or 50 Ohms. That of the lower four in parallel will be 100 ÷ 4 or 25 Ohms. Then 50 + 25 = 75 Ohms, total resistance.

Now, according to Ohms law, we find that with 200 volts applied the current will be 200 ÷ 75 or 2⅔ amperes. This current will all flow through the upper two lamps, and then divide out through the lower four, so the upper lamps will burn much brighter than the lower ones.

The reason for this can also be checked by our knowledge of Ohms law and voltage drop principles. We know that the voltage drop across any device or group of devices in parallel is proportional to the resistance of the devices and the current flowing through them, or E d = I × R. Then, with a current of 2⅔ amperes flowing through the upper two lamps, which have a combined resistance of 50 Ohms, we find we have 2⅔ × 50, or 133⅓ volts drop across them, which accounts for their burning much too bright. On the lower group with the same current flowing through a resistance of 25 Ohms, we will have 2⅔ × 25, or 66⅔ volts drop across the lamps, which accounts for their burning very dim.

This over voltage applied to the upper group will cause their filaments to be severely overheated, and possibly burned out if they are left long in this condition.

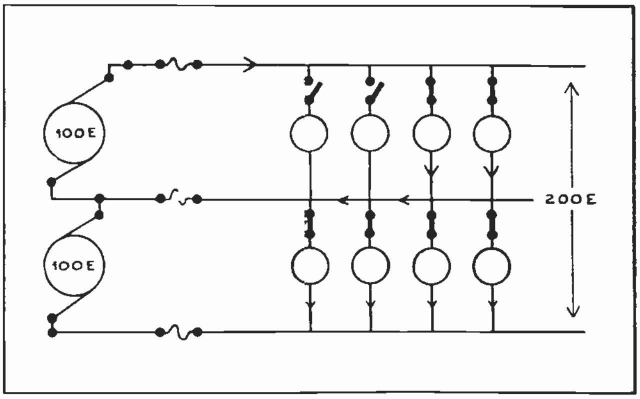

Fig. 135. This diagram illustrates what would happen if the neutral wire was to become opened on an unbalanced three-wire system. The upper two lamps would then burn excessively bright, and the lower four would burn very dimly.

From this we see what a common indication of a blown neutral fuse or a non-polarized three-wire system would be when part of the lamps burn excessively bright and others burn very dim.

This cannot happen on the modern polarized system where the neutral has no fuse and is always closed, allowing the generators to balance up the load by applying 100 volts at all times to each side of the circuit. If this had been the case in Fig. 135, the lamps would have remained at normal briliancy, as 100 E ÷ 50 R of the upper group would cause just two amperes, or one ampere for each lamp, to flow through them; while 100 E ÷ 25 R of the lower group would cause four amperes, or one ampere for each lamp, to flow through them. The neutral wire would carry the difference.

While it is not likely that the neutral will often have to carry as much current as the outer wires, on a properly balanced three-wire system, it is possible for it to happen occasionally, so the Code requires that the neutral wire be the same size as the others, except on loads over 200 amperes, where we can reduce the size of the neutral 30%. This reduction is allowed either from the maximum connected load, or by applying what is known as a **Maximum Demand Factor,** which will be explained later.

We have illustrated the principles of the three-wire system with two D. C. generators as the source of the two different voltages, because it is easy to understand and was the first method of obtaining this system. In a number of places this method is still in use, where 110 and 220 volts D. C. are used. In other cases a special three-wire generator is used, having a connection to a center point in its armature winding to obtain the neutral or half voltage wire.

This system can also be used just as readily on A. C., by using two transformers connected in series, or merely a center tap from the 220 volt secondary winding of one transformer, as shown in Fig. 136. This is by far the most common type of three-wire system in use today, and is applied to power systems at 220 or 440 volts A. C., as well as to house wiring systems.

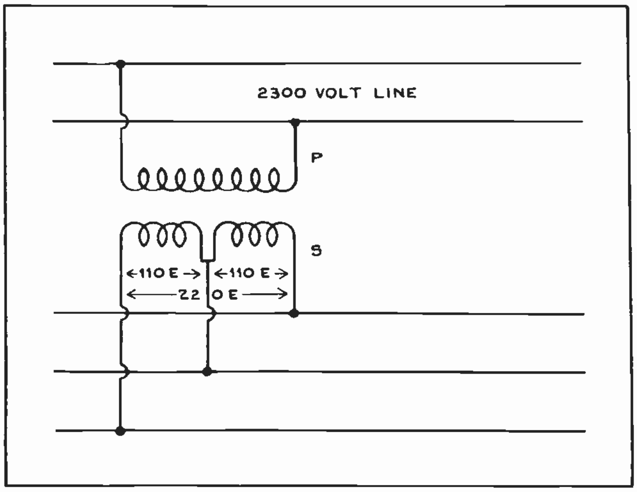

Fig. 136. Three-wire A.C. systems can be conveniently obtained by the use of a center connection to transformer windings as shown above.

92. POLARIZED WIRING SYSTEMS

This system has been mentioned several times so far, particularly with reference to the grounding of various circuits and devices. The term polarized in this case refers to the grounding and marking or identification of the neutral wire.

The modern polarized wiring system is one that has the neutral wire thoroughly grounded at the service switch, and this grounded wire distinguished throughout the entire system by a different color from the "hot" or ungrounded wire.

Generally, we use a wire with black or red insulation for the ungrounded wire, and one with white or light gray insulating braid for the grounded wire. This applies to wires from 14 to 6 in size. On larger wires and cables, other methods of marking the grounded wire are used. Its ends can be coated with white paint or tagged, or at the service entrance the ends left for the power company's man to connect his wires to, can have the insulation stripped off the grounded wire for a short distance. The identification of the grounded wire should be carried on through every branch circuit, fixture wire, etc., right up to the device using the current.

The other very important rule for a polarized system, as previously mentioned, is that the neutral or grounded wire must not have any fuse in it at any point, but must always be complete and unbroken from the service box to the very tip of light sockets or devices to which it is attached. Or, in other words, it must be what is called a **Solid Neutral.**

93. SAFETY FEATURES AND ADVANTAGES OF POLARIZED WIRING

The principle advantage of maintaining this unbroken grounded wire, and having it plainly marked, is so that it can always be connected to the threaded or outer element of lamp sockets and receptacles; while the "hot" or ungrounded wire must always be connected to the inner or center terminal of such sockets. This eliminates practically all danger of anyone getting a shock by touching this device, even if the insulation of the outer element failed, allowing it to touch the shell or casing.

You will find the terminal screws of the latter type sockets, receptacles, and switches are also identified by one screw having a yellow or brass color, and the other a white or silvery color.

The grounded wire should, of course, attach to the lighter colored screw, and the "hot" wire to the brass colored screw.

When using BX we must make an exception to the rule on connection of the black and white wires together.

This is because we must have one black wire and one white one coming out of the outlet for connection to the light fixture, as in Fig. 136-B. In order to do this, we must connect the white wire of the BX, which runs to the switch, to the black wire in the ceiling outlet.

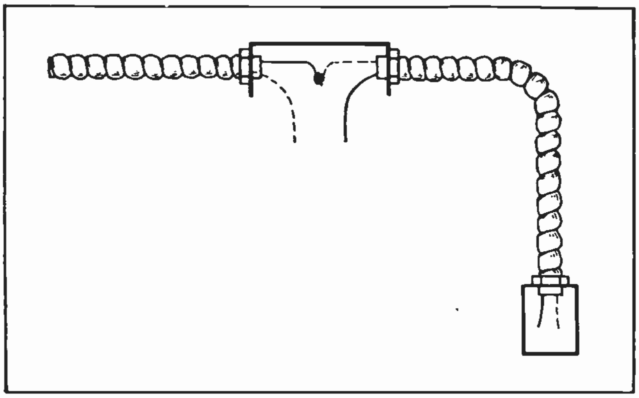

Fig. 136-B. This sketch shows the manner in which the white and black wires in a polarized system are connected at the outlet boxes for ceiling lights and wall switches.

We should then remember that the white wire at the switch is the "hot" one, and the black wire at the ceiling outlet is the return wire from the switch, and it should be connected as usual to the yellow screw on the fixture.

In order to make this protection positive and dependable, you can readily see that the grounded wire must always be complete clear back to the transformer, and we should never place any switch in this side of the circuit, unless it also opens the ungrounded wire at the same time it opens the grounded one. Double pole snap switches, for example, open both wires at the same time. Single pole switches must always be placed in the ungrounded wire.

Having this neutral wire grounded, as well as the conduit, gives us added protection against fire or shock hazard from the conduit system.

In case the insulation of the "hot" wire becomes defective, and allows it to touch the conduit, this causes a short circuit and immediately blows the fuse, indicating a defect on the circuit, which can be repaired at once. Using this system with a solid neutral also eliminates the possibility of having an open neutral and burned out lamps or devices on one side of the system from an unbalanced load.

94. GROUNDING NEUTRAL WIRE OF POLARIZED SYSTEMS

At the transformers you will always find three wires coming from the secondary winding. The center one of these is the neutral, and is grounded by the power company. The ground inside the building at the service switch should be heavy copper wire not smaller than No. 8, as previously mentioned, and this wire should be protected from possible breakage by being run inside the piece of conduit to the waterpipe, where it is attached by use of a ground clamp, previously described.

The end of this ground wire at the service box is usually connected to the "neutral strap" in the switch box, and also to a brass grounding screw that will be found in the modern steel switch cabinet.

We do not ground the service switch or any part of an interior D. C. wiring system, but one wire of the D. C. line is grounded at the power plant.

On all alternating current systems, however, this additional grounding of the neutral wire as well as the conduit, and the identification of this wire throughout the system are great safety features and advantages, and make the Edison three-wire system a very desirable one to use.

95. PARTS OF WIRING SYSTEMS

Every wiring job consists of at least two, and sometimes three, important parts. They are the **Service, Feeders,** and **Branch Circuits.** All jobs must have the service and branch circuits, and on the larger installations the main circuits feeding from the service to the branch circuit panels are called feeders.

The service can be divided into two parts also. One part is the running of the wires from the transformer or line to the building service entrance, which would be the **Drip Loops** or weather cap on the building. The other part is the running of the wires from the drip loop into the service switch.

96. SERVICE WIRES

The service wires from the pole are usually run by the power company from whom the power is to be purchased. These wires should have weatherproof insulation, and be attached to insulators at the house in a manner to keep all strain off from the drip loop and weather cap.

See Fig. 137, which shows how these wires would be attached to the building, and also a method of bracing a porch, or part of a building, to stand the strain that long heavy service wires might place upon it.

The **Drip Loop,** or slack loops of wire from the insulators to the weather cap, are used to prevent water from running down the wires into the conduit.

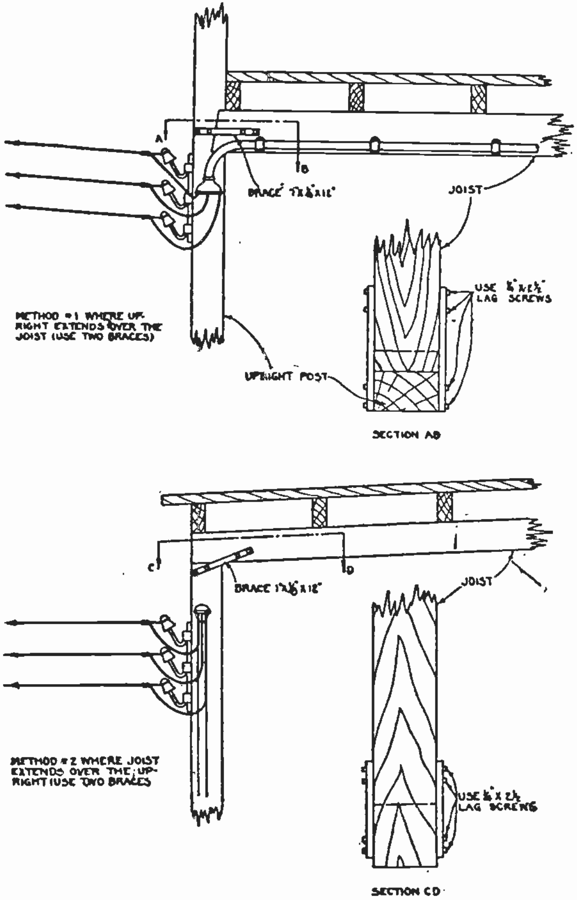

Fig. 137. The above two sketches show the method of arranging the connections of service wires to a building with strain insulators, drip loops, and weather heads. Also note the method of bracing a porch or corner of a building to stand the strain of a long run of service wires.

The electrician wiring the house can use either conduit or knob and tube work for running the service on in to the service switch. The Code recommends the use of conduit, and it is much the best.

The service wires must be at least No. 8 and rubber covered. This requires ¾" conduit, which can be run from a point near the outside insulators, either up or down the outside wall, or along horizontally, to a convenient place for entrance to the service switch inside. The wires and conduit should be larger if the load requires.

This conduit should always be equipped with a **Weather Cap,** such as one of the types shown in Fig. 138, so the wires enter from the under side and no water can enter the conduit.

In some cases a "B" condulet fitting can be used, or the upper end of the conduit bent in an inverted "U", and an "A" condulet used to form the weather protection. The strain insulators and weather cap should be located 15 to 18 feet from the ground if possible.

If knob and tube work is used for the service, the wires should also enter the building high up, to be out of reach from the ground outside. They should also pass through properly sloped tubes where they enter the wall.

Service wires should enter the building at a point as near as possible to the service switch, and this switch should be located near a door or window if possible. This location of the switch is to make it more easily accessible in case of fire.

Fig. 138. Weather head fittings of the types shown above are used on the end of conduit at the service entrance to prevent water from entering the conduit.

97. FEEDERS

On larger jobs, such as apartment buildings, stores, and offices, cut-out blocks, or fuse cabinets are often located on the various floors or in various sections or apartments. The **feeders** are run from the service switch to these branch circuit panels, and the wires must be of the proper size according to the load in amperes which they are to carry.

Sometimes several buildings are connected together by feeders, in which case there must be a suitable **Feeder Control** switch at one end or the other, to separate the systems in each building when necessary.

Service or feeder wires when passing over any buildings must clear the roofs 8 ft. at their nearest point.

98. BRANCH CIRCUITS

Practically all wiring systems have **Branch Circuits,** which may be referred to as the **wires beyond the last set of fuses.**

Most branch circuits are two-wire circuits, although some are three-wire. On all ordinary two-wire branch circuits of under 125 volts, we must use at least No. 14 wire, and fuses of not over 15 ampere size as a rule.

In addition to lamps, we may connect appliances of not over 660 watts or 6 amperes each to these branch circuits.

99. TYPES OF BRANCH CIRCUITS

Branch circuits are sub-divided into:

Lighting Branch Circuits, which are intended to supply energy to lighting outlets only, and are governed by the rules just given.

Combination Lighting and Appliance Branch Circuit, which as its name implies is a combination of lighting and power outlets with limits as shown above.

Appliance Branch Circuits, which supply energy to permanently wired appliances or to attachment plug receptacles.

Appliance Branch circuits are further sub-divided into:

Ordinary Appliance Branch Circuits, using as a rule receptacles and plugs rated at not over 15 amperes at 125 volts, using at least No. 14 wire and fused for not to exceed 15 amperes. On these circuits we may use appliances rated at not over 1320 watts.

Medium Duty Appliance Branch Circuits, wired with No. 10 wire, and fused for 25 amperes, where we may use appliances rated not to exceed 15 amperes or 1650 watts each.

Heavy-Duty Appliance Branch Circuits, wired and fused as above, for appliances between 15 and 20 amperes.

Appliances using over 20 amperes should be supplied by individual circuits.

100. LOADS ON WIRING SYSTEMS, AND SIZE OF SERVICE WIRES

The total connected load on any wiring system can easily be calculated by adding up the rating in watts of all the lamps and devices connected to the system.

Then, by dividing this wattage by the voltage of the system, we can determine the current in amperes which would flow if all the devices were ever operated at once. This would be called the maximum load.

In the ordinary building there is almost never a time when all lights or devices are turned on at once. However, careful tests and measurements on various classes of buildings show certain average loads which represent the usual case. In various types of buildings these loads vary from 25 per cent to 85 per cent of the connected load.

Until 1928 the National Code required the installation of service wires and feeders large enough to take care of the **Maximum Connected Load.** If there was a total connected load of 500 amperes in the building, the service wires had to be large enough for this load, even though there was practically no chance of 500 amperes ever being used at any one time.

101. DEMAND FACTOR

The Code now permits us, under certain conditions, to consider the **Maximum Demand** instead of the **Maximum Connected Load,** when figuring the size of service and feeder wires. To do this we use what is called the **Demand Factor.** This figure is obtained from the ratio of the maximum demand to the connected load of the type of system we are considering. It is based on the area, as determined by the outside dimensions of the building and the number of floors; and it may be applied to interior wiring systems supplying both lights and appliances. This demand factor also varies with the use to which the building is put.

Let us consider an example for an ordinary single-family dwelling. If the house is 40′ x 70′ and two stories high (not counting unoccupied basements or unfinished attics or porches) then its area will be 40′ × 70′ × 2 = 5600 sq. ft .

For the first 2000 sq. ft. of such buildings, we allow one watt per sq. ft. or 2000 watts; and for the balance .60 watts per sq. ft. The balance in this case is 5600 — 2000, or 3600 sq. ft.

With this balance we can use the demand factor, which is .60 for this type of building. Then .60 × 3600 = 2160. We must always add an extra 1000 watts for appliances.

The total load, or maximum demand, will then be 2000 + 2160 + 1000 or 5160 watts. If this is to be on a balanced three-wire system we can divide the watts by 220 volts, or 5160 ÷ 220 = 23.4+ amperes, to allow for on the service wires. If it is to be a 110 volt system then 5160 ÷ 110 = 46.9+ amperes. (Note—Wherever the + sign is used after an answer figure, it indicates this figure is approximate and not carried out to long decimal fractions.)

In residence buildings of the apartment type, for from two to ten families, we use .70 as the demand factor, and add 1000 watts for each apartment for appliances. The demand factor can also be applied to the total allowance for appliances.

In stores, including department stores, we allow two watts per sq. ft., except for display cases and show windows. For counter display cases, allow 25 watts per linear ft. (per ft. of length); for wall and standing cases, 50 watts per linear foot; and for show windows, 200 watts per linear ft. In such buildings 1.00 is used as a demand factor.

In garages, allow ½ watt per sq. ft., and use 1.00 as the demand factor.

In industrial plants and commercial buildings, the service wires are calculated for the specified load of the equipment. This takes into consideration the average load factor, which will be covered in a later section on motors.

Other kinds of installations are covered in the Code and can easily be referred to when required.

Keep in mind that the demand factor applies only to services and feeders, and not to branch circuits.

WIRE CALCULATIONS

102. WIRE CALCULATIONS

A great deal of valuable information on the size of copper wires, their resistance, and current carrying capacity can be obtained from convenient tables; and they should be used whenever possible as they are great time savers.

There are certain cases, however, when tables are not available or do not give just the needed information, and a knowledge of simple wire calculations is then very important.

For example, the table in the National Code which gives the allowable current carrying capacities is based on the heating of the wires and does not consider voltage drop due to resistance of long runs or lines. Both of these considerations are very important and should always be kept in mind when planning any electrical wiring system.

The wires must not be allowed to heat enough to damage their insulation, or to a point where there will be any chance of igniting nearby materials. If wires are allowed to heat excessively, it may cause the solder at joints to soften and destroy the quality of the splices; and in other cases it may result in expansion of the wires and resulting damage. Heat is also objectionable because it increases the resistance of the wires, thereby increasing the voltage drop for any given load.

103. VOLTAGE DROP

Whether or not the wires heat noticeably, the resistance and voltage drop on long runs may be great enough to seriously interfere with the efficient operation of the connected equipment. Incandescent lamps are particularly critical in this respect and a drop of just a very few volts below the voltage for which they are rated, greatly reduces their light and efficiency. In the case of lighting circuits, the current reduces when the voltage at the lamps is below normal.

Motors are not affected by small voltage variations quite as much as lamps are, but they will not give their rated horsepower if the voltage is below that at which they are rated. When loaded motors are operated at reduced voltage, the current flow actually increases, as it requires more amperes to produce a given wattage and horsepower at low voltage than at the normal voltage. This current increase is also caused by the fact that the opposition of the motor windings to current flow reduces as their speed reduces. The reason for this will be explained later.

From the foregoing we can see that it is very important to have all wires of the proper size, to avoid excessive heating and voltage drop; and that, in the case of long runs, it is necessary to determine the wire size by consideration of resistance and voltage drop, rather than by the heating effect or tables alone.

To solve the ordinary problems requires only a knowledge of a few simple facts about the areas and resistance of copper conductors and the application of the simplest of arithmetic.

104. GAUGE NUMBERS BASED ON RESISTANCE

You have already learned that wire sizes are commonly specified in B. & S. gauge numbers. This system was originated by the Brown & Sharpe Company, well known manufacturers of machine tools. The B. & S. gauge is commonly called the American Wire Gauge, and is standard in the United States for all round solid electrical wires.

These gauge numbers are arranged according to the resistance of the wires, the larger numbers being for the wires of greatest resistance and smallest area. This is a great convenience, and a very handy rule to remember is that **increasing the gauge by three numbers gives a wire of approximately twice the area and half the resistance.** As an example—if we increase the gauge from No. 3, which has .1931 Ohms per 1000 ft., to No. 6, we find it has .3872 Ohms per 1000 ft., or almost double.

Brown & Sharpe gauge numbers range from 0000 (four ought), down in size to number 60. The 0000 wire is nearly ½ inch in diameter and the number 60 is as fine as a small hair.

The most common sizes used for light and power wiring are from the 0000 down to No. 14; and also, of course, the Nos. 16 and 18, which are used only for fixture wiring.

105. CIRCULAR MIL, UNIT OF CONDUCTOR AREA

In addition to the gauge numbers, we have a very convenient unit called the **Mil,** for measuring the diameter and area of the wires. The mil is equal to 1/1000 of an inch, so it is small enough to measure and express these sizes very accurately. It is much more convenient to use the mil than thousandths or decimal fractions of an inch. For example, instead of saying a wire has a diameter of .055", or fifty-five thousandths of an inch, we can simply say or write 55 Mils. So a wire of 250 Mils diameter is also .250", or ¼ inch, in diameter.

As the resistance and current-carrying capacity of conductors both depend on their cross-sectional area, we must also have convenient small units for expressing this area. For square conductors such as bus bars we use the **Square Mil,** which is simply a square 1/1000 of an inch on each side. For round conductors we use the **Circular Mil,** which is the area of a circle with a diameter of 1/1000 of an inch. The abbreviation commonly used for circular mil is C.M.

These units simplify our calculations considerably, as all we need to do to get the area of a square conductor in **Square Mils,** is to multiply one side by the other, measuring them in mils or thousandths of an inch.

To get the area of a round conductor in **Circular Mils,** we only need to square its diameter in mils or thousandths of an inch.

106. CONVERSION OF SQUARE MILS TO CIRCULAR MILS

In comparing round and square conductors, however, we must remember that the square mil and circular mil are not quite the same size units of area. For a comparison see Fig. 139. At "B" we have shown a circle within a square. While the circle has the same diameter as the square, the corners of the square make it the larger in area. So just remember this little illustration, and it will be easy to recall that the area of one **Circular Mil** is less than that of one **Square Mil.** The actual ratio

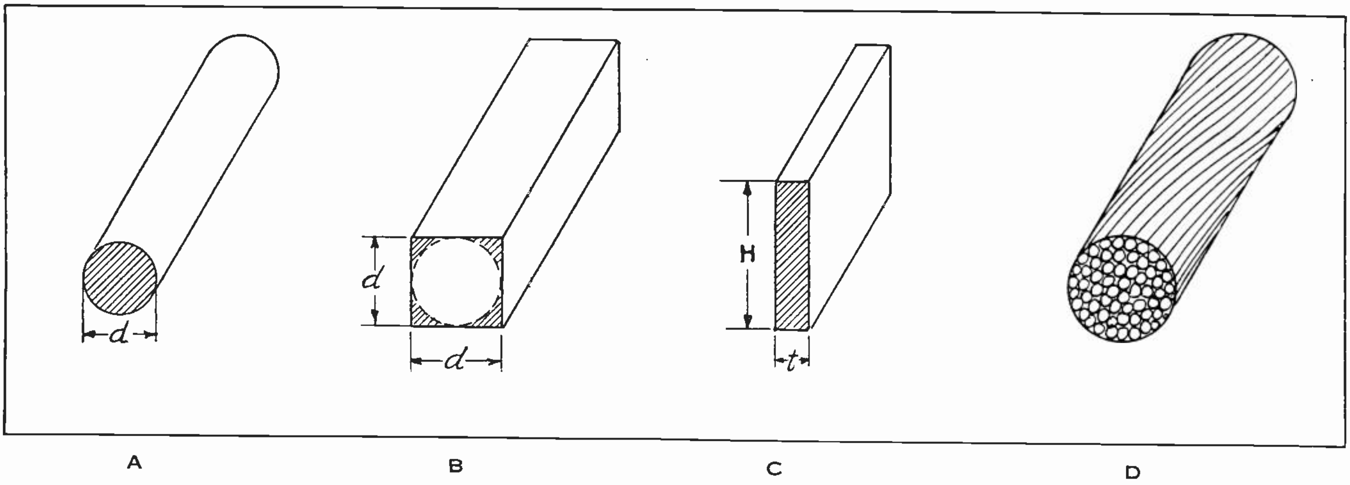

Fig. 139. Electrical conductors are commonly made in the several shapes shown above. Note particularly the comparative areas of round and square conductors as shown at "B", and refer to these illustrations when making the calculations explained in the accompanying paragraphs.

between them is .7854, or the circle has only .7854 of the area of a square of the same diameter.

Then if we wish to **find the Circular Mil Area from the number of Square Mils, we divide the Square Mils by .7854.** If we wish to **find the Square Mil Area from Circular Mils, multiply the Circular Mils by .7854.**

For example, if the conductor at "A" in Fig. 139 is a No. 0000 and has a diameter of 460 mils, what is its area both in circular mils and in square mils? The C.M. area is 460 × 460 = 211,600 C.M. Then the sq. mil area is 211,600 × .7854 = 166,190.64 sq. mils.

If the bus bar at "C", in Fig. 139, is 1½ inches high and ¼ inch thick, what is its area in square mils, and what size of round conductor would be necessary to carry the same current that this bus bar would? First, the dimensions of a ¼" x 1½" bus bar, stated in mils, are 250 mils × 1500 mils. Then the area in sq. mils is 250 × 1500 = 375,000 sq. mils.

To find what this area would be in circular mils we divide 375,000 by .7854, and find it would be 477,463.7 C.M. The nearest size to this in a round conductor is the 500,000 C.M. size, which we would use in this case.

Bus bars of the shape shown at "C" in Fig. 139 are commonly used in wiring power plant or large distribution switchboards. These bars ordinarily range in thickness from .250" to .375"; and in height, from 1" to 12". On voltages under 600 they can be used bare, when properly mounted on switchboard panels. On higher voltages they are usually taped to avoid shock hazard.

It is quite common practice to allow about 1000 amperes per sq. inch on such busses when they are located in well ventilated places. This is a very convenient figure and should be remembered.

When heavier currents than one of the thin bars can carry, are to be handled on a switchboard, several bars are usually mounted in parallel with small spaces between them for air circulation and cooling.

Stranded conductors, such as shown in Fig. 139-D, are used on all sizes larger than 0000. As stranded conductors are not solid throughout, we cannot determine their area accurately by squaring their diameter. This diameter also varies somewhat with the twist or "lay" of the strands.

To determine the cross-sectional area of such conductors, we get the area of each strand, either from a wire table or by calculation from its diameter, and then multiply this by the number of strands, to get the total area of the cable in C.M.

The following wire table gives some very convenient data and information on the common sizes of conductors, and will be very convenient for future reference as well as during your study of this section.

WIRE TABLE. (Bare Solid Copper)
B & S Gauge

Size B&S Gauge	Diameter in Mils	Area in Circular Mils	Lbs. per 1000 feet Bare Wire	Resistance (Ohms) per 1000 feet at 60° F.
		Solid Wire		
26	15.94	254.1	.77	40.75
25	17.90	320.4	.97	32.21
24	20.10	404.01	1.22	25.60
23	22.57	509.5	1.54	20.30
22	25.35	642.4	1.95	16.12
21	28.46	810.1	2.45	12.78
20	31.96	1022.	3.10	10.14
19	35.89	1288.	3.90	8.04
		Solid Strand		
18	40.30	1624.	4.917	6.374
16	50.82	2583.	7.818	3.936
14	64.08	4107.	12.43	2.475
12	80.81	6530.	19.77	1.557
10	101.9	10380.	31.43	.9792
9	114.4	13090.	39.63	.7765
8	128.5	16510.	49.98	.6158
7	144.3	20820.	63.02	.4883
6	162.	26250.	79.46	.3872
5	181.9	33100.	100.2	.3071
4	204.3	41740.	126.4	.2436
3	229.4	52630.	159.3	.1931
2	257.6	66370.	200.9	.1532
1	289.3	83690.	253.3	.1215
0	324.9	105500.	319.5	.09633
00	364.8	133100.	402.8	.07639
000	409.6	167800.	508.	.06058
0000	460.	211600.	640.5	.04804
	Stranded Cable—Circular Mil Sizes			
Approximate Diameters	500.	250000.	756.8	.04147
	547.7	300000.	908.1	.03457
	591.6	350000.	1059.	.02963
	632.5	400000.	1211.	.02592
	707.1	500000.	1514.	.02074
	774.6	600000.	1816.	.01729
	836.7	700000.	2119.	.01481
	866.	750000.	2270.	.01382
	894.4	800000.	2422.	.01296
	948.7	900000.	2724.	.01153
	1000.	1000000.	3027.	.01036
	1118.	1250000.	3784.	.00839
	1225.	1500000.	4540.	.00692
	1323.	1750000.	5297.	.00593
	1414.	2000000.	6054.	.00518

The above table of diameters, areas, weights, and resistance of copper wires will be very convenient whenever you have a problem of wire sizes or calculations.

107. RESISTANCE OF CONDUCTORS

As previously mentioned, it is often necessary to determine the exact resistance of a conductor of a certain length, in order to calculate the voltage drop it will have at a certain current load.

The resistance per 1000 ft. of various wires can be obtained from the accompanying wire table, and from these figures it is easy to calculate the resistance of smaller or greater lengths.

Suppose you wish to find the total resistance of a two-wire run of No. 10 conductors 150 ft. long. First multiply by 2, to get the entire length of both wires; or 2 × 150 = 300 ft. Then, from the table, we find that the resistance of No. 10 wire is .9792 Ohms per 1000 ft. Our circuit is less than 1000 ft.; or 300/1000 × .9742 = .29226 Ohms; or approximately .29, which would be accurate enough for the ordinary job.

In another case, we wish to run a short outdoor line between two buildings, a distance of 1650 ft., and using No. 1 wire. What would its total resistance be? The total length of both wires will be 2 × 1650 = 3300 ft. From the table, we find the resistance of No. 1 wire is .1215 Ohms per 1000 ft. Then as 3300 ft. is 3.3 times 1000, we multiply 3.3 × .1215 = .40095 or approximately .4 Ohms.

The National Code table for carrying capacities of wires, allows 100 amperes for No. 1 R.C. wire. We find, however, that if we have this much current flowing through our line, the voltage drop (Ed) will be I × R or 100 × .4 = 40 volts. This is too much to be practical, because even if we applied 120 volts to one end of the line, the lamps or devices at the other end would receive only 120 — 40, or 80 volts. The watts loss in the line would be I × Ed, or 100 × 40 = 4000 watts, or 4 KW.

So we find that the practical load for such a line would be about 25 amperes, which would give a voltage drop of 25 × .4 or 10 volts. If we now apply 120 volts to the line, the equipment at the far end will receive 110 volts, and the loss will only be 25 × 10 or 250 watts.

108. RESISTANCE OF COPPER PER MIL FOOT

In many cases we may need to calculate the resistance of a certain length of wire or bus bar of a given size.

This can be done very easily if we know the unit resistance of copper. For this we use the very convenient unit called the **Mil Foot:** This represents a piece of round wire 1 mil in diameter and 1 ft. in length, and is a small enough unit to be very accurate for all practical calculations. A round wire of 1 mil diameter has an area of just 1 circular mil, as the diameter multiplied by itself or "squared", is 1 × 1 = 1 circular mil area.

The resistance of ordinary copper is 10.79 Ohms per Mil Foot, but we usually use the figure 10.8 as sufficiently accurate. This figure or "constant" is important and should be remembered.

Suppose we wish to determine the resistance of a piece of No. 12 wire, 50 ft. long. We know that the resistance of any conductor increases as its length increases, and decreases as its area increases. So, for a wire 50 ft. long, we first multiply, and get 50 × 10.8 = 540, which would be the resistance of a wire 1 C.M. in area and 50 ft. long. Then we find in the table that the area of a No. 12 wire is 6530 C.M., which will reduce the resistance in proportion. So we now divide: 540 ÷ 6530 = .0826+ Ohms.

In another case we wish to find the resistance of 3000 ft. of No. 20 wire, for a coil winding perhaps. Then, 3000 × 10.8 = 32,400; and, as the area of No. 20 wire is 1022 C.M., we divide: 32,400 ÷ 1022 = 31.7+ Ohms.

Checking this with the table, we find the table gives for No. 20 wire a resistance of 10.14 Ohms per 1000 ft. Then for 3000 ft. we get 3 × 10.14 = 30.42 Ohms. The small difference in this figure and the one obtained by the first calculation, is caused by using approximate figures instead of lengthy complete fractions.

We can use the mil ft. unit and its resistance of 10.8 to calculate the resistance of square bus bars, by simply using the figure .7854 to change from sq. mils to C.M.

Suppose we wish to find the resistance of a square bus bar ¼" x 2", and 100 ft. long. The dimensions in mils will be 250 × 2000, or 500,000 sq. mils area. Then, to find the circular mil area, we divide 500,000 by .7854 and get 636,618+ C.M. area. Then, 100 ft. × 10.8 = 1080 Ohms, or the resistance of 100 ft. of copper 1 mil in area. As the area of this bar is 636,618 C.M., we divide: 1080 ÷ 636,618 = .001,696+ Ohm, total resistance. According to the allowance of 1000 amperes per sq. inch, such a bus bar could carry 500 amperes, as it is ¼" × 2" = ½ sq. inch area. With a 500 ampere load, the voltage drop would be I × R, or 500 × .001696 = .848, or approximately .85 volts drop.

The following table gives the allowable current carrying capacities of wires with rubber insulation; also those with varnished cloth and other insulations, such as slow burning, etc. This table gives the current allowed by the National Code.

ALLOWABLE CURRENT CARRYING CAPACITY OF WIRES

B. & S. Gauge Number	Area in Circular Mils	Allowable Current in Amperes Rubber Insulation	Varn. Cloth Insulation	Other Types Insulation
18	1,624	3	....	5
16	2,583	6	....	10
14	4,107	15	18	20
12	6,530	20	25	25
10	10,380	25	30	30
8	16,510	35	40	50
6	26,250	50	60	70
5	33,100	55	65	80
4	41,740	70	85	90
3	52,630	80	95	100
2	66,370	90	110	125
1	83,690	100	120	150
0	105,500	125	150	200
00	133,100	150	180	225
000	167,800	175	210	275
	200,000	200	240	300
0000	211,600	225	270	325
	250,000	250	300	350
	300,000	275	330	400
	350,000	300	360	450
	400,000	325	390	500
	500,000	400	480	600
	600,000	450	540	680
	800,000	550	660	840
	1,000,000	650	780	1,000
	1,500,000	850	1,020	1,360

The capacities above are based on copper having 98 per cent of the conductivity of pure copper wire. For insulated aluminum wire the capacity will be taken as 84 per cent of the values given in the table. Wires can be connected in parallel for greater capacity only by the consent of the inspection department of the National Board of Fire Underwriters.

109. ALLOWABLE VOLTAGE DROP

We must remember, however, that this table does not take into consideration the length of the wires or voltage drop. For this reason we may often wish to use larger wires than the table requires.

In lighting installations, we should never use wires so small that there will be over 2 per cent drop on branch circuits, or 3 per cent drop on feeder circuits. Generally the voltage drop should not be more than 1 to 2 per cent. On power wiring installations, there should usually not be over 5 per cent drop. This means that on a 110 volt branch circuit we should not have over .02 × 110 or about 2.2 volts drop; on 220 volt feeder circuits, not over .03 × 220 or 6.6 volts drop; and on 440 volt power circuits, not over .05 × 440 or 22 volts drop, etc.

110. SIMPLE FORMULA FOR CONDUCTOR AREA

For selecting the proper size of conductor for any known load in amperes, and to keep the voltage drop within the desired practical limit, we have a very simple formula that will tell us the circular mil area of the conductor to use.

This formula must, of course, consider the resistance of copper, the total length of the line, and the current load in amperes. It is as follows:

$$C.M. = \frac{10.8 \times L \times 2 \times I}{Ed}$$

In which:

C.M. = Circular mil area of conductor.
10.8 = Resistance of copper per mil ft.
L = Length of line in feet.
2 = Is to multiply by to obtain total length of both wires.
I = Load in amperes.
Ed = Allowable voltage drop in volts. (Not in per cent.)

(Note: The figure 2 is also used for Edison three-wire systems, as the current never has to flow through more than the resistance of two wires.)

Now let's see how we would use this handy formula for choosing the size of wire on a certain job. Suppose we wish to run a feeder 200 ft. long to a branch panel on which the load consists of: Twenty-six 60 watt, 110 volt lamps; ten 200 watt, 110 volt lamps; and one 10 h.p., 220 volt motor.

First, we will find the total load in watts. Twenty-six 60 watt lamps will use 26 × 60, or 1560 watts. Ten 200 watt lamps will use 10 × 200, or 2000 watts. As there are 746 watts in 1 h. p., the 10 h. p. motor will use 10 × 746 or 7460 watts. (Assuming 100% efficiency.)

Then 1560 + 2000 + 7460 = 11,020 watts. Assuming this load to be balanced, the current will all flow over the two outside feeder wires at 220 volts. So to find the current we use the formula W ÷ E = I, or 11,020 ÷ 220 = 50+ amperes.

We will allow 6 volts drop on the feeders, and, using the wire size formula, we will substitute the values we have found, as follows:

$$C.M. = \frac{10.8 \times 200 \times 2 \times 50}{6}$$

Working this out, we find we get 36,000 C.M. area for the wire. Looking this up in the table we find that the next size larger is No. 4 wire, which has 41,740 C.M. area. As the Code table allows 70 amperes for this wire with rubber insulation, we find we are quite safe in using it from this standpoint.

Try out the foregoing formula on some imaginary problems of your own, until you can use it easily because it is very commonly used in electrical layouts and estimating.

111. VOLTAGE DROP FORMULA

If we wish to determine what the voltage drop will be on a certain installation already made, or on the wires proposed for a job, we can simply transpose the formula we have just used, interchanging voltage drop for C.M. area, as follows:

$$Ed = \frac{10.8 \times L \times 2 \times I}{C.M.}$$

Suppose we have a two-wire, 110 volt installation where the load is 25 amperes and the feeder is 120 feet long, and only supplied with 110 volts.

The Code allows us to use a No. 10 wire for 25 amperes, and the area of No. 10 wire is 10,380 C.M. Then, substituting these values in the formula, we have

$$Ed = \frac{10.8 \times 120 \times 2 \times 25,}{10,380} \text{ or 6.05 volts,}$$

whereas we should not have more than 3% of 110, or about 3.3 volts drop.

In another case, suppose an electrician used No. 14 wire for a 110 volt branch circuit in a factory and this circuit had twelve 100 watt lamps and two 60 watt lamps connected to it, and was 90 ft. long. The total watts in this case would be 1320 and at 110 volts, this would be a load of 12 amperes. It would be quite natural to use No. 14 wire, as the Code allows 15 amperes for this size, and it is the size so commonly used. But checking it with our formula we find that No. 14 wire has an area of 4107 C.M., and that

$$Ed = \frac{10.8 \times 90 \times 2 \times 12,}{4.107} \text{ or 5.6+ volts drop,}$$

which would certainly not be satisfactory.

Using the other formula again, we can easily determine the size of wire that should have been used on this job to keep within the normal 2 volts drop.

$$\text{C.M.} = \frac{10.8 \times 90 \times 2 \times 12,}{2} \text{ or } 11{,}664 \text{ C.M. Area}$$

As the next larger wire is No. 8, this should have been used; or as a No. 10 wire has 10,380 C.M. area, it could be used, with slightly over 2 volts drop.

So we find that it is very important to be able to do these simple wire calculations on certain jobs, and you will find this material of great value, both in learning how to use the formulas, and in using them and the tables for future reference.

The following table of voltage drop per 1000 ft., per ampere, with various sized conductors is also very convenient, and the wire table on the next page gives a lot of very valuable data on copper conductors, that will often prove very useful.

TABLE OF VOLTAGE DROP

Size B. & S. Gauge	Volts drop per 1000 feet per ampere
18	6.374
16	3.936
14	2.475
12	1.557
10	.9792
9	.7765
8	.6158
7	.4883
6	.3872
5	.3071
4	.2436
3	.1931
2	.1532
1	.1215
0	.09633
00	.07639
000	.06058
0000	.04804
250,000.	.04147
300,000.	.03457
350,000.	.02963
400,000.	.02592
500,000.	.02074
600,000.	.01729
700,000.	.01481
750,000.	.01382
800,000.	.01296
900,000.	.01153
1,000,000.	.01036
1,250,000.	.00829
1,500,000.	.00692
1,750,000.	.00593
2,000,000.	.00518

Volts Lost Per 1000 Feet per Ampere.

Gauge Equivalents with Weights and Resistances of Standard Annealed Copper Wire

B. & S. American Wire Gauge No.	Diameter In Inches	Area Circular Mils	Ohms at 68 deg. Fah.			Feet		Pounds			B. & S. American Wire Gauge No.
			Per 1,000 Ft.	Per Mile	Per Pound	Per Pound	Per Ohm	Per 1,000 Ft.	Per Ohm	Per Mile	
0000	0.460	211600.	0.04906	0.25903	0.000077	1.56122	20497.7	640.51	12987.	3380.	0000
000	0.40964	167805.	0.06186	0.32664	0.00012	1.9687	16255.27	507.95	8333.	2680.	000
00	0.3648	133079.	0.07801	0.41187	0.00019	2.4824	12891.37	402.83	5263.	2130.	00
0	0.32486	105534.	0.09831	0.51909	0.00031	3.1303	10223.08	319.45	3225.	1680.	0
1	0.2893	83694.	0.12404	0.65490	0.00049	3.94714	8107.49	253.34	2041.	1340.	1
2	0.25763	66373.	0.1563	0.8258	0.00078	4.97722	6429.58	200.91	1282.	1060.	2
3	0.22942	52634.	0.19723	1.0414	0.00125	6.2765	5098.61	159.32	800.	840.	3
4	0.20431	41743.	0.24869	1.313	0.00198	7.9141	4043.6	126.35	505.	665.	4
5	0.18194	33102.	0.31361	1.655	0.00314	9.97983	3206.61	100.20	318.	528.	5
6	0.16202	26251.	0.39546	2.088	0.00499	12.5847	2542.89	79.462	200.	420.	6
7	0.14428	20817.	0.49871	2.633	0.00797	15.8696	2015.51	63.013	126.	333.	7
8	0.12849	16510.	0.6529	3.3	0.0125	20.0097	1599.3	49.976	80.	264.	8
9	0.11443	13094.	0.7892	4.1	0.0197	25.229	1268.44	39.636	50.	209.	9
10	0.10189	10382.	0.8441	4.4	0.0270	31.8212	1055.66	31.426	37.	166.	10
11	0.090742	8234.	1.254	6.4	0.0501	40.1202	797.649	24.924	20.	132.	11
12	0.080808	6530.	1.580	8.3	0.079	50.5906	632.555	19.766	12.65	105.	12
13	0.071961	5178.	1.995	10.4	0.127	63.7948	501.63	15.574	7.87	82.9	13
14	0.064084	4107.	2.504	13.2	0.200	80.4415	397.822	12.435	5.00	65.5	14
15	0.057068	3257.	3.172	16.7	0.320	101.4365	315.482	9.859	3.12	52.1	15
16	0.05082	2583.	4.001	23.	0.512	127.12	250.184	7.819	1.95	41.3	16
17	0.045257	2048.	5.04	26.	0.811	161.22	198.409	6.199	1.23	32.7	17
18	0.040303	1624.	6.36	33.	1.29	203.374	157.35	4.916	0.775	26.0	18
19	0.03589	1288.	8.25	43.	2.11	256.468	124.777	3.899	0.473	20.6	19
20	0.031961	1021.	10.12	53.	3.27	323.399	98.9533	3.094	0.305	16.3	20
21	0.028462	810.	12.76	68.	5.20	407.815	78.473	2.452	0.192	12.9	21
22	0.025347	642.	16.25	85.	8.35	514.193	62.236	1.945	0.119	10.24	22
23	0.022571	509.	20.30	108.	13.3	648.452	49.3504	1.542	0.075	8.13	23
24	0.0201	404.	25.60	135.	20.9	817.688	39.1365	1.223	0.047	6.44	24
25	0.0179	326.	32.2	170.	33.2	1031.038	31.0381	0.9699	0.030	5.12	25
26	0.01594	254.	40.7	214.	52.9	1300.180	24.6131	0.7692	0.0187	4.06	26
27	0.014195	201.	51.3	270.	84.2	1639.49	19.5191	0.6099	0.0118	3.22	27
28	0.012641	159.8	64.8	343.	134.	2067.364	15.4793	0.4837	0.0074	2.56	28
29	0.011257	126.7	81.6	432.	213.	2606.959	12.2854	0.3835	0.0047	2.03	29
30	0.010025	100.5	103.	538.	338.	3287.084	9.7355	0.3002	0.0029	1.61	30
31	0.008928	79.7	130.	685.	539.	4414.49	7.72143	0.2413	0.0018	1.27	31
32	0.00795	63.	164.	865.	856.	5226.915	6.12243	0.1913	0.0011	1.01	32
33	0.00708	50.1	206.	1033.	1357.	6590.41	4.85575	0.1517	0.00076	0.803	33
34	0.006304	39.74	260.	1389.	2166.	8312.8	3.84966	0.1204	0.00046	0.634	34
35	0.005614	31.5	328.	1820.	3521.	10481.77	3.05305	0.0956	0.00028	0.504	35
36	0.005	25.	414.	2200.	5469.	13214.16	2.4217	0.0757	0.00018	0.400	36
37	0.004453	19.8	523.	2765.	8742.	16659.97	1.92086	0.06003	0.00011	0.317	37
38	0.003965	15.72	660.	3486.	13772.	21013.25	1.52292	0.04758	0.00007	0.251	38
39	0.003531	12.47	832.	4395.	21896.	26496.237	1.20777	0.03755	0.00004	0.199	39
40	0.003144	9.88	1049.	5542.	34823.	33420.63	0.97984	0.02992	0.000029	0.158	40

No. 140. This very complete table of data for copper conductors will often save you a great amount of time if you become familiar with its use, and refer to it for the information it contains. It will be a good plan to compare the sizes, areas and resistance of a number of the more common sized wires given in this table. This will help you to understand the gauge numbers and in making selections of proper conductors for various jobs in the future.

INSTALLATION METHODS

112. LAYOUTS AND PLANS

In starting any wiring job, whether you are working for a contractor or in business for yourself, there are certain general steps to be followed. Regarding simple knob and tube installations, it is not necessary to say much more about the details of this work than has been previously covered. However, remember that before running any wires, one should have the location of all outlets well in mind, and preferably sketched on a plan; and then marked on the frame work of the new building, if it is such; or upon the walls and ceilings of an old building in which the wiring is being installed after the house has been built.

113. LOCATION OF LIGHT AND SWITCH OUTLETS

Ceiling outlets for lighting fixtures should be carefully located and centered to give a balanced appearance in the room, and to afford the best distribution of light.

Wall light outlets should be placed about the walls with proper regard for locations of doors, windows, and large permanent pieces of furniture. Outlets for wall bracket lights should be approximately 66 inches from the floor, if the fixture turns upward from the outlet. If it is of the type that hangs downward, the outlet should be about 72 to 74 inches from the floor. These heights, of course, will depend somewhat upon the ceiling height in various rooms, and the scheme of decoration used. Outlets for wall switches should be about 52 inches from the floor to the bottom of the outlet box, and their locations should be carefully chosen to give the greatest convenience in control of the lights. For example—it is common practice to have the control switches for one or more lights near the front door or entrance to the house, so they can be turned on as soon as the person comes inside at night. In other rooms of the house, switches can be placed either near doors, or in the most convenient locations, to save as many steps as possible. The owner of the building should of course be consulted on such matters, in order to give the best possible satisfaction in the finished job.

After the outlets have all been located, the shortest and most direct runs should be chosen for the various wires to fixtures and switches. Then if there is no blue print already provided for the job, a complete wiring diagram of each floor should be laid out on paper to be sure to get the proper circuits and control of lights and equipment with the fewest possible wires.

114. KNOB AND TUBE INSTALLATION

If knob and tube wiring is being installed in a new building, the holes for the porcelain tubes can be drilled through the center of the joists, as these holes are not large enough to materially weaken the woodwork. Knobs can be placed along the joists for circuits to be run in the walls, and also along the joists in unfinished attics and basements. Before determining the location of the meter and service switch, we should locate the probable point at which the power company will bring the wires from their pole line into the building, and the service switch and meter should be located near this point if possible.

In knob and tube installation in new buildings, the wiring should, of course, all be installed before the lath and plaster are put on the walls. The thickness of lath and plaster that are to be used should be carefully considered, so that the edges of the outlet boxes will be about flush with or about an eighth of an inch under this surface.

115. MAKING CONNECTIONS TO SWITCHES AND FIXTURES

When the wires are attached, and the ends brought out in the box, it is well to plug the outlet box with a wad of newspaper to keep the wire ends from becoming damaged or the box clogged with plaster. After the plaster is on and has hardened, the fixtures can be hung and connections made to them and the switches.

In making all such connections, be sure to strip enough of the end of the wires to make a good hook, or one complete turn under the terminal screws, but don't strip an excessive amount so there would be more bare wire than necessary around the switch terminals for fixture connections. See that these wires are bright and clean before placing them under the screws, and always bend the hook in the end of the wire to the right, that is, clockwise or in the same direction the screw head turns. This causes the screw to wrap the wire hook tight around it; while if the hook is made in the opposite direction it often opens up and works out from under the screw head when it is tightened. Don't twist these screws too tight, because they are usually of soft brass and the threads can be easily stripped.

116. BX AND NON-METALLIC CABLE INSTALLATION

The same general rules apply to wiring a new building with BX or non-metallic sheathed cable. Either of these materials can be run along the joists and through holes in the framework as required. Before cutting the various lengths of wire, BX, or cable for any run, be sure to measure them accurately and allow a few inches extra for stripping the ends and making splices and connections. It is always much better to allow a few inches over and trim this off when making the final connections, rather than to find the wires or cable too short and then have to replace them. Always tighten BX and cable clamps securely in the outlet box openings.

When wiring old buildings, great care should be used not to damage the plaster or decorations, and not to make any unnecessary dirt or mess around the building. When cutting holes in the plaster on walls or ceilings to locate outlet boxes, a cloth or paper should be spread underneath to catch all plaster dust. Sometimes an old umbrella can be opened and hung or held up side down under the place in the ceiling where the hole is being made, so it will catch all of this dirt and keep it off from rugs and furniture.

117. LOCATING AND CUTTING OUTLET BOX OPENINGS

Be careful not to cut any of these holes so large that the fixture canopies or switch plates will not cover them neatly. In case the plaster cracks or a mistake is made so that the hole cannot be completely covered, it should be filled with plaster of paris, or some such material, to make a neat appearance again.

Outlet box holes can be cut through the plaster with a chisel. The size of the holes should be carefully marked by drawing a pencil around the outlet box, held against the plaster. In locating the exact spot to cut these openings in the plaster, it is well to first cut a very small hole in the center of the spot where the larger one is to be made, using this to locate the cracks between the lath. Then it is possible to shift the mark for the larger hole up or down a little so the lath can be cut properly, to leave a place in the wood for the screws which fasten the box to the wall. If this method is not followed, sometimes two complete laths are cut away, and the metal ears on the box, which have the screw holes in them, will not reach from one remaining lath to the other.

On wall outlet openings we should always try to cut clear through one lath and a short distance into two adjacent ones. Fig. 141-A shows the wrong way that laths are sometimes cut, and "B" shows the proper way in which they should be cut.

For cutting round holes a regular plaster cutter can be obtained, which fits into an ordinary brace and can be rotated the same as a drill.

For ceiling outlets never cut the lath any more than necessary to bring the wires or BX through.

118. RUNNING WIRES AND BX INTO DIFFICULT PLACES

A number of methods have already been described for pulling and fishing wires, cable, and BX into walls and openings in finished buildings; so that, with a little ingenuity and careful thought, you will be able to solve almost any problem of this kind that you may encounter.

In pulling wires into spaces between the joists in walls, a flashlight placed in the outlet box hole is often a great help in feeding the wires in, or in catching them with a hook to draw them out of the outlet opening.

Where it is necessary to remove floor boards, it should be done with the greatest of care, so as not to split the edges and make a bad appearing job when the boards are replaced. A special saw can be obtained for cutting into floors without drilling holes to start the saw. Then, if the beading or tongue is split off with a thin sharp chisel driven down in the crack between the boards, the board from which the tongue has been removed can be pried up carefully without damaging the rest of the floor.

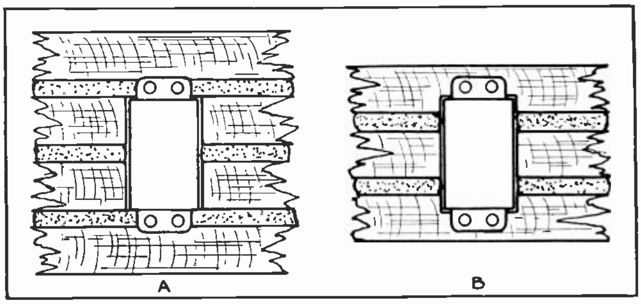

Fig. 141. The view at "A" shows the wrong method of cutting lath to install an outlet box for switches. Note that the metal "ears" do not reach over the lath to provide any anchorage for the screws. At "B" is shown the correct method of cutting the lath to make a secure mounting for boxes of this type.

If it is necessary to run wires or BX crosswise through a number of floor or ceiling joists, it can usually be done by boring the holes through them at a slight angle, and then working the wires or cable through. Where tubes are used, be sure to place the heads up in these slanting holes, so the tubes cannot work out.

Sometimes it is necessary to remove baseboards and cut holes behind these, to aid in fishing the wires or cable up or down through floors and into the walls at this point. In other cases, a channel can be cut in the plaster behind the baseboard, and BX or non-metallic sheathed cable run in this channel, and the baseboard replaced to cover it.

Whenever removing baseboards in this manner, be very careful not to split the "quarter-round" wood strips or trimming that is often fastened along the edges of the baseboard. A broad putty knife is a very good tool to use in removing these strips.

A key-hole saw is very useful in cutting through laths to make outlet openings. Let's emphasize once again that in installing old house wiring, thoughtfulness, care, and neatness are the greatest essentials in leaving the customer satisfied.

119. CONDUIT INSTALLATION

When installing conduit wiring systems in new buildings, the entire plan should be carefully gone over first, to make sure that proper number of wires for each circuit and the proper sizes of conduit have been selected. A great deal of time and money can be saved by planning these things in advance and thereby avoiding costly mistakes.

After the outlets have been located and the boxes carefully installed on their proper supports and hangers, the lengths of conduit can be cut, bent, and fitted in place.

In running conduit in wood frame buildings, care must be taken not to damage or weaken the building structure. In some cases a conduit run cannot be made in the shortest and most direct line, because it would necessitate the notching of joists at some distance from any support. This should not be done, as it is likely to weaken them too much. Instead, it is better to run the conduit along between the joists for some distance and then make the cross run near a wall or partition support, so the notches in the joists can be near their ends where the strain is not so great.

Fig. 142 is a view looking down on a group of ceiling joists, and which illustrates the proper method of running conduit in such cases.

In certain types of frame-building construction, finished floors are laid on strips an inch or more thick over the soft-wood floors. In such cases, with the permission of the contractor or architect, the conduit can often be run between these floors, thus saving considerable labor and materials.

All lengths of conduit should be screwed into their couplings as tightly as possible, to make the conduit ground circuit complete and the entire system secure and tight.

In attaching the conduit to outlet boxes, screw the lock-nut well back on the threads, insert the threaded end of the pipe in the knock-out opening, and screw the bushing on this end as far as it will go. Then tighten the lock-nut securely with a wrench.

120. SPECIAL PRECAUTIONS FOR CONDUIT IN CONCRETE BUILDINGS

When installing conduit in concrete buildings, there are sometimes fewer problems than with wood construction, but there are a number of different details which must be observed. In this type of building, conduit generally runs directly by the shortest path from one box to the next; and when the concrete is poured around it, the conduit, instead of weakening the structure, has a tendency to strengthen it.

Just as soon as the wood forms for a certain section of the building are set up, the electrician must be on the job to install the conduit and outlet boxes. In some cases he must be on hand practically all the time these forms are going up, as there are certain places where it is necessary to install the boxes or conduit as the carpenters are placing the wood forms.

The locations of outlet boxes, particularly those for ceiling lights, should be lined up carefully and straight, so the fixtures will present a neat appearance when they are installed. If these boxes are carelessly located, it is almost impossible, and certainly a mighty costly job, to correct them after the concrete is poured.

After the locations for the outlets have been carefully marked on the boards, the conduit can be cut to the proper lengths, reamed, threaded, and fitted to the outlet boxes.

Before the boxes are nailed in place, the ends of all conduits should be tightly plugged, either with wood plugs or with special disks which are held in place by the bushings. These plugs are to keep soft concrete from running into the pipes. Then the outlet boxes themselves should be packed tightly with newspaper, so that there is no possibility of their filling up with wet concrete. Then the boxes should be nailed securely in place so that there is no chance of their being moved before or during the time the concrete is being poured. If these precautions of plugging conduit and outlet boxes are not observed, you will often encounter a very difficult and expensive job of drilling hard concrete out of the boxes or pipes.

The installation of the complete conduit system is what we term "roughing in." None of the wires should be pulled in until all mechanical work on the building is completed. Sometimes on big buildings this requires weeks or months after the conduit has been installed, so you can see how important it is to have complete and accurate sketches and plans of the whole electrical system.

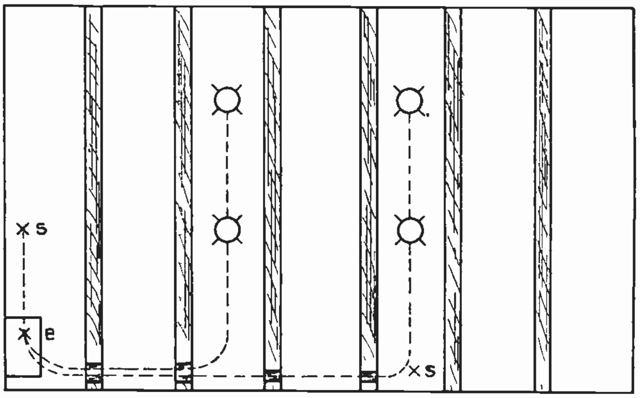

Fig. 142. Ceiling joists should not be notched in their centers in order to run conduit by the shortest path to outlets. Instead the joists should be notched near walls or supports, and the conduit bent to run through these notches, and then back between the joists to the outlets as shown in this diagram.

121. PULLING IN THE WIRES

When we are ready to pull the wires into the conduit, the outlet boxes should be cleaned out and all plugs removed from the ends of the pipe.

On very short runs, the ends of the wires can sometimes be twisted together and the group simply pushed through from one outlet to the next. More often, however, we will need to push the steel fish tape through first, and then pull the wires through with it, as previously described. This is usually a job for two men, one to feed the wires into the conduit straight and even, without allowing them to cross or kink, and the other man to pull on the fish tape.

We should not forget to use powdered soap stone to lubricate the wires when necessary on long runs.

On short runs where the wires pull in rather easily, it may only be necessary to hook them through the loop in the fish tape and twist them together a few times. On more difficult runs, it is sometimes necessary to solder these twisted loops so there will be no chance of their pulling loose from the fish tape.

122. FINAL TESTS

When the wires are all pulled in and the ends cut off at the outlet box, allowing the extra length for splices and connections, these ends can then be stripped and cleaned. Before any connections are made, all wires should be thoroughly tested with a dry cell and buzzer or magneto and bell, to make sure there are no shorts or grounds which might have occurred through damaging the insulation when the wires were pulled in.

After the splices are made, it is a good idea to make another thorough test before they are soldered, to see that all connections are proper and that no faults have developed.

The soldering should then be done immediately, before the bare copper has time to oxidize or corrode. Then all splices should be thoroughly and carefully taped, both with rubber and friction tape. Never slight this part of the job because, if you do, shorts or grounds are likely to develop when the poorly taped splices are pressed back into the outlet boxes.

In hanging fixtures care should be taken to make a neat job of it, and not to dirty the light-colored ceiling by rubbing hands or black materials against it. In some cases the fixture splices are soldered, while in others solderless connectors can be used. These connectors are especially desirable in buildings where no smoke or soot from the soldering operation can be allowed.

After all wiring is complete and all devices connected up, make a final test at the fuse box to be sure there are no shorts or grounds on the "hot" wire. If the system tests clear, then insert the fuses if the service has been connected to the power line, close the switch and test all switches and lights for satisfactory operation.

BUSINESS METHODS AND ESTIMATING

123. SALESMANSHIP

For the man who may plan to enter a business of his own sooner or later, the following common sense principles of salesmanship and business methods, as well as the simple practical tips on estimating, should be very useful.

In most towns, whether they are small villages or medium-sized or larger cities, there are opportunities for a wide-awake electrical contractor who knows his business and gives first-class, up-to-date service.

Even in the small towns or localities, where there seems to be considerable competition already existing, an aggressive man can often build up a splendid business with certain classes of work that are overlooked by the present organizations; and in some cases, where the existing prices charged for this work are high, the man starting in on a small scale with low overhead expense can often do first-class work at a more reasonable price, and thereby build up a good business and reputation for himself.

This, of course, cannot be done by merely locating in a place, and waiting for the business to come to you. It requires active salesmanship and some advertising to get established and build up a business of this nature.

A great many men have the ability and qualifications necessary, and with training of the kind covered in the course, should be able to make a real success, and certainly should not overlook these opportunities.

124. NOT MUCH CAPITAL REQUIRED TO START

As mentioned in an earlier section, a great number of our graduates have started splendid businesses of their own with a few small jobs to begin with, doing the work in their own basements or homes, on such repair jobs as were taken in. Of course, the smaller wiring jobs for various customers are done on their premises, and do not require at the beginning an elaborate outlay of tools and materials. As the business grows, one can acquire more tools and materials, some of which should be kept on hand. Later he may rent a shop or building for a store and place to repair electrical equipment.

The very fact that you have had training at an institution of this kind often makes a prospective customer more inclined to try your work and ability, and if you uphold your reputation from the start by putting your knowledge into practice and doing first-class work on every job, your success will be quite certain.

125. PERSONAL CONTACT WITH CUSTOMERS VERY IMPORTANT

Very often the easiest way to secure the first jobs is by personal contact and salesmanship. Wherever new buildings are being erected there are possible customers for wiring jobs, whether these buildings are small private garages, complete homes, stores, factories, or office buildings.

Even where there is very little construction taking place, there are usually homes or buildings with old style and very incomplete wiring systems. Their owners can often be easily convinced that the addition of convenience outlets, more lights, and better lighting fixtures would be a convenience or actual saving of time in the home that would well repay the small cost of installation.

In approaching a customer with a suggestion of this kind, it is often a great help in interesting them, to carry along a few good-looking pictures of homes properly wired, illustrating the great improvement in appearance and the many conveniences thus obtained. A Foot Candle Meter to test the light and fixtures in a home will often interest a customer a great deal from the very moment you call. Their interest at first may be almost entirely in the instrument, but if you can get them to go about the house with you, and see the actual readings, and the evidence which the meter gives of poor lighting, then they can usually be interested in the greater comfort and reduced eye-strain, as well as the much better appearance of the home where proper lighting is installed.

It may be necessary to make even twenty or thirty calls of this kind to secure one job, but this should not be allowed to discourage one, because it doesn't take so much time to make these calls, and even if a great number are made without results at that particular time, many of them will result in business in the near future.

If you can succeed in leaving a good impression of yourself, your knowledge of the subject, and your sincerity and desire to be of service, many of these persons will call you back later, perhaps to do some small job; or will recommend you to their friends who may have wiring or repairs to do. Of course, you should always leave some small card or folder with your name, address, and telephone number, so they can conveniently get in touch with you later.

126. MODERN METHODS AND INSTRUMENTS TO SECURE INTEREST AND CONFIDENCE OF CUSTOMER

Some instrument, such as the Foot Candle Meter mentioned, or perhaps a volt meter for testing the voltage at the outlets and lamp sockets, will tend to leave the impression that you are up-to-date and well qualified to do good work whenever they may need you.

A free inspection of the wiring and electrical appliances in a home is often a very good method of approach. If conditions are found in the wiring which are likely to be hazardous from the fire or shock standpoint, this can be called to the attention of the owner in a diplomatic and pleasant manner, and a recommendation made that they be fixed or changed at the first opportunity.

Minor repairs on plugs or cords of appliances, defective light switches or sockets, and things of this kind can often be made in a few minutes time, and with almost no cost to the electrician. They will, however, usually create a great amount of good will, and be the cause of securing future business.

A few weeks of "missionary work" of this nature will usually be required to get things started and begin to bring in the jobs, but remember that any business organization or experienced business-man expects to do these things when starting out in any locality.

It is well to keep in mind that one's personal appearance is important in making calls on home owners or prospective customers. A neat, business-like appearance tends to create confidence and respect.

127. ESTIMATING—TIME AND MATERIAL BASIS

When it comes to giving a price on a job, there are several ways in which this can be handled. The time and material basis is ideal for the electrician, and can usually be made satisfactory to the customer. When a job is done in this manner, the customer pays you by the hour for the work of installing the system, and also pays you for the material, which you may buy wholesale and sell to him at retail prices, thus making a reasonable profit in addition to your wages.

If you merely make fair wages on the first several jobs this should be quite satisfactory, for you will be obtaining experience, not only in doing the actual work and gaining confidence in your knowledge and ability, but also in the time required for each type of work, and the costs of various items. You should keep a very careful record of these things, as they will be of great assistance in making accurate estimates on future jobs.

128. COST PER OUTLET

Totaling the entire expense of any job of a certain class of wiring and then dividing this by the number of outlets, will give you a basis on which to estimate jobs of this type in the future. After experience on several installations, you can quote prices at so much per outlet on jobs of any type, such as knob and tube, BX, or conduit wiring. These different classes of wiring are, of course, to be done at different prices per outlet.

Before giving such an estimate, however, you should always look over the building or plans very carefully, to make sure that you are not running into certain difficulties in the installation that will run the expense considerably higher than you expected. In certain types of construction, or where certain special requirements have to be met to please the customer or to satisfy the local inspector, it will be necessary in making your estimate to add a certain amount to the usual price per outlet.

It is well to emphasize here that you should not discuss with your customers the basis or method by which these figures are obtained, because in some cases they may use this as a wedge to force a competitor to cut his prices below yours.

129. OVERHEAD EXPENSE AND PROFIT

After you obtain a start and are doing larger jobs, a certain percentage should be added to the cost of materials and labor for overhead expense and profit. These things may sometimes need to be explained to customers, so they do not get the impression that you are overcharging them for certain items.

There is always certain to be some **overhead expense** or **cost of doing business**, regardless of whether you have a shop or merely operate your business from your home. This overhead consists of certain small items of expense which you cannot charge directly to the customer, but should properly proportion over the charges for each job.

Some of these items are as follows:

Telephone Bills
Electric Light and Water Bills
Rent; or Taxes, if you own a building
Insurance, both Fire and Liability
Non-Productive Labor
Advertising
Truck and hauling expenses
Depreciation of stock and materials you may carry on hand
Bad or uncollectable bills
Bookkeeper, or any office help
General office and shop expense

The item of profit on medium and large sized jobs is one that you are justly entitled to. If you buy your supplies and materials from a large dealer at wholesale prices and charge the customer the regular retail price, this is one source of profit, and a certain reasonable percentage can be added to your wage allowance on any job to complete your per cent of profit.

In other words, there is no use of operating a business if you cannot show at the end of each year a substantial profit or gain. The cost of any job, then, should be divided into at least four items:

1. Net Cost of Material
2. Net Cost of Labor
3. Overhead Expense
4. Profit

Experience has shown that on a small business of under $20,000.00 gross per year, the overhead will frequently run as high as 30 to 35 per cent. The larger the volume of business, the less the percentage of overhead should be; and with a gross business of $60,000.00 per year we would usually figure about 20 to 25 per cent. Your profit should certainly be at least 10 per cent above all expenses, and this should be in addition to a fair salary for your time.

If you do a total of $40,000.00 worth of business in a year, at the end of the year, your income tax report should show that, after paying all bills and your salary and considering all debits and credits, there remains a clear profit of 10 per cent, or $4,000.00.

By adding all your overhead items together you should get about 25 per cent, or $10,000.00. If your overhead is more than that amount it shows that there is something wrong in your methods, and you should try to reduce it during the next year, by looking over each item to see where economy can be effected.

130. METHOD OF FIGURING OVERHEAD AND PROFIT IN AN ESTIMATE

When figuring on any certain job we don't know, of course, what the gross price is going to be, and, therefore, have to make allowances for these extra items. For example, suppose we consider a job where we find the material will cost $32.00. The next item to consider will be the labor. While this varies a great deal in different sections of the country, we might estimate it to be about equal to the cost of the material, or slightly more, and we will say it is $33.00. This makes a net cost, so far, of $65.00 for material and labor. If we are going to allow 25% for overhead and 10% for profit to make the total cost, or 100%, this leaves 65% for the net cost. If $65.00 is 65% of the cost, then 100%, or the total cost, would be $100.00, which should be the price quoted for this job. **If you multiply the net cost for labor and materials by .54 it will give the approximate total cost, including the extra 35% for profit and overhead.**

In some cases, of course, a job can be quoted at a figure which doesn't cover these extras. For example, where you have a chance to sell equipment which you buy direct from a dealer for a certain job and do not have to carry in stock yourself, this reduces your overhead. In fact the more of this class of business you can do and the less idle stock you carry, the greater your profit will always be. However, in an active business of any size some standard items must always be kept on hand.

131. ALWAYS DO FIRST-CLASS WORK

Never make a practice of trying to get a job by cutting your price so low that you have to install poor materials, or do a poor job of the installation.

Always do first-class work at a fair price, and explain to your customers that you are certain they will remain better satisfied with this kind of work than if you cut the price and give them a poor job.

132. GETTING NEW CONTRACTS

Very often a number of new jobs can be secured by keeping in close touch and on friendly terms with building contractors and architects, and those in your community who are in a position to know first of new buildings being erected and who may perhaps recommend you for the electrical work.

133. PRACTICAL ESTIMATING PROBLEMS

As an example of laying out a job and materials for the estimate, let's consider the installation shown in Fig. 143.

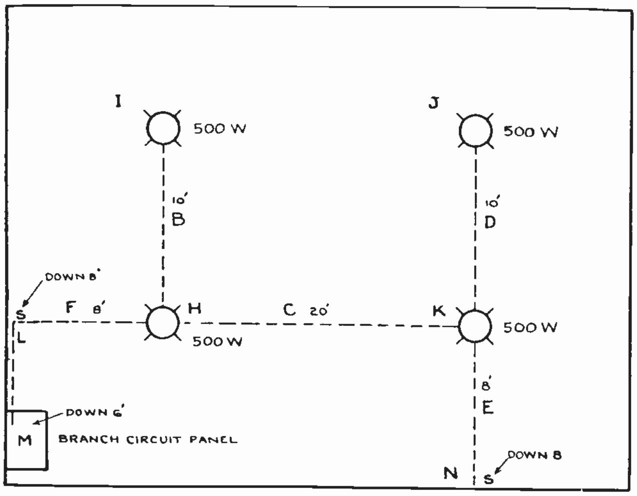

Fig. 143. Layout of a wiring system for four large lights, showing the measurements to be taken in preparing a list of the materials for such a job. Note the explanation and list given in the accompanying paragraphs.

This diagram shows a room in a finished building, such as a store or shop, where the customer desires an installation of exposed conduit. As this is not a new building and there are no blue prints, you should make a rough sketch of the proposed wiring system; and, after locating the outlets and switches, measure the room carefully for the necessary lengths of material. We have four outlets, each for a 500-watt lamp, which means we will need two branch circuits. We will assume that the layout is such that outlets "H" and "I" can be on one circuit, and "J" and "K" on the other. With the distance shown No. 14 wire and ½-inch conduit can be used. The wires for both circuits from the cut-out box to the outlet "H" can be run in one conduit. At the point marked "L" one circuit will have a wire looped down for a switch connection to control lights "H" and "I". Where the conduit changes direction to run down the walls to the cut-out boxes and switches, condulets can be used.

From this lay-out we find the approximate list of materials will consist of the following (not including the cut-out box or fuses):

85 feet ½-inch conduit
4 4-inch Octagon outlet boxes
4 Fixture studs
2 Type L ½-inch condulets
1 Type LBR ½-inch condulets
3 ½-inch blank condulet covers
2 Flush switch condulets
2 Flush switch condulet covers
2 Single-pole flush switches
9 ½-inch conduit bushings
9 ½-inch lock-nuts
20 ½-inch pipe straps
225 feet of No. 14 R.C. wire
Also the necessary solder, tape, and screws.

After making up an estimate from the above, it is generally a good plan to add 5% to cover small items that cannot be foreseen in advance.

In another case, suppose we consider a house-wiring job where our records show that we can figure by the outlet. Assume this to be a knob and tube installation in a new building under construction, and that there are to be 50 outlets, half of which are lighting outlets and half are flush switches or flush receptacles. If our records show that on this sized job we should get $2.75 per lighting outlet and $3.25 per switch or convenience outlet, then the estimate should be $150.00, plus the service price, which the records may show will average $15.00; thus we make the total estimated price $165.00. In such cases as this your records of previous jobs of similar type will be of great assistance in making an accurate and intelligent bid.

133-A. WIRING PLANS AND LAYOUTS

Figures 144 and 145 show the basement and first floor plans of a one-story bungalow, with a layout of the wiring system. This is a very simple system with just the ordinary number of lights and convenience outlets, and could quite easily be installed in an old house, using BX or non-metallic sheathed cable.

The heavy dotted lines show the circuits feeding to the lights and outlets, while the light dotted lines show the wires from the lamps to the switches which control them. The wiring does not need to run exactly as the lines are shown here, but could, of course, be altered somewhat to suit the building.

In the basement, which in this case is wired with conduit, the equipment is as follows:

"A" is the service switch and branch circuit fuse box.

"B" and "C" are lights controlled by a switch at the head of the stairs.

"D" is the laundry light, controlled by a switch at the door to the laundry room.

"E" is a convenience outlet for washing machine, flat iron, etc.

"F" and "G" are lights on drop cords, controlled by switches on the light sockets.

"H" is a bell transformer which is connected to the junction box "J".

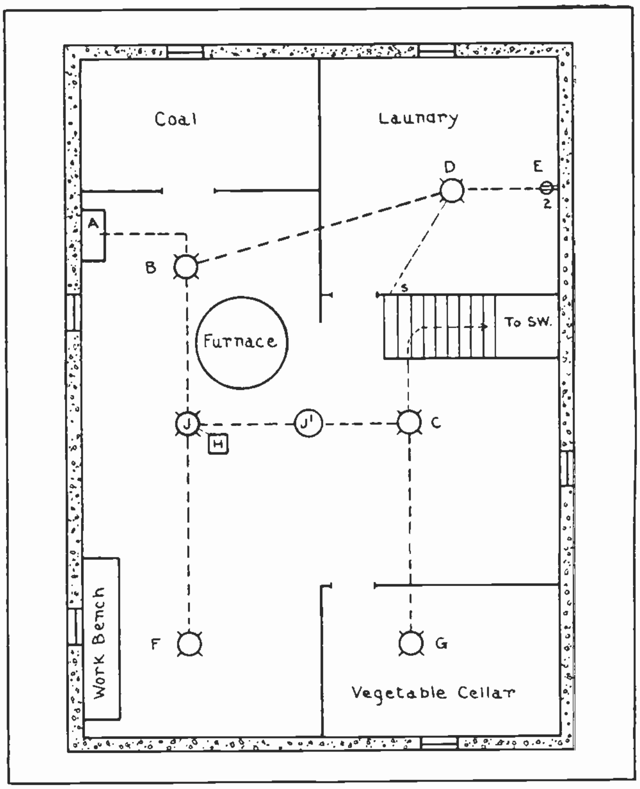

Fig. 144. This diagram shows the basement wiring plan for a one-story building. Check carefully each of the circuits and outlets shown with the explanations given.

"J-1" is a junction box from which BX will be run up through the partition to feed the branch circuits on the floors above.

The number of wires which we will have in each of these runs will be as follows:

"A" to "B"—six wires, three black and three white.

(One two-wire circuit for the basement, and two circuits for upstairs)

"B" to "J-1"—seven wires, four black and three white.

"J" to "F"—two wires, one black and one white.

"C" to "G"—two wires, one black and one white.

"B" to "D"—two wires, one black and one white.

"D" to "E"—two wires, one black and one white.

"J-1" to "C"—three wires, two black and one white.

"D" to switch outlet—two black wires.

"C" to switch outlet—two black wires.

Here again, we can see one of the advantages of polarized wiring, as all of the white wires can be connected together, leaving much less chance for mistakes and wrong connections than if we use all black wires.

In the floor above we have one ceiling light in the center of each room except the living room, which has two; and one in the hall near the bathroom. There is also a light at the head of the stairway. The living room and kitchen lights are each controlled from two different places, by three-way switches. This provides the convenience of being able to turn them on or off at either door at which one might enter these rooms.

The six double convenience-outlets shown represent just a minimum for an installation of this type; so it might be desirable to install several more of these while wiring the house. The convenience-outlets are located near each other on opposite sides of the walls in the different rooms. This greatly simplifies the wiring as one run can be made to take care of each pair of these outlets.

The dotted lines in this view show only the runs from the lights to the switches which control them. The branch circuits to the lights are not shown; as their position would be a matter of choice and convenience, according to the construction of the house and the points at which they could be best carried through partitions, floors, and ceilings.

Fig. 146 shows a sample form for listing the outlets used on a job, such as shown in Figures 144 and 145. The lighting, switch, and convenience-outlets for this particular job are shown listed on this form. Forms of this type are a great help in getting an accurate list of all the parts and fittings needed for the various rooms of any house-wiring job.

In wiring a new home we would undoubtedly put in a greater number of lights and convenience outlets, as well as three-way switches for selective

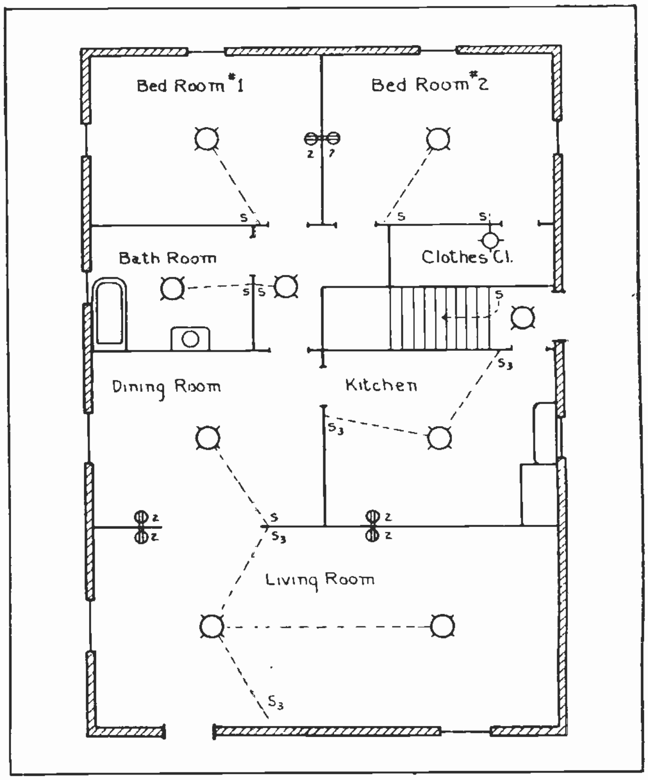

Fig. 145. Wiring diagram for a bungalow residence. Note the location of lights, switches, convenience outlets, etc.

ROOMS	CEILING OUTLETS	WALL BRACKETS	CONVENIENCE OUTLETS	SWITCH OUTLETS	REMARKS
BASEMENT	2			1	AT HEAD OF STAIRS
LAUNDRY	1		1	1	
VEG. CELLAR	1				
WORK BENCH	1				
BELL TRANSF.	1				
LIVING RM.	2		2	2	3 WAYS
DINING RM.	1		1	1	
KITCHEN	1		1	2	3 WAYS
BATH	1			1	
BED RM.#1	1		1	1	
BED RM.#2	1		1	1	
HALL	1			1	
CLOSET		1		1	
ALL CONVENIENCE OUTLETS ARE DOUBLE					

Fig. 146. Simple forms of this type are a great help in totaling the number of outlets for any job. Other forms are used for listing the materials for each room and the total wiring job.

control. Fig. 147 shows a cut-away view of the first floor in a modern home, which gives some idea of the arrangement of wall bracket lights, convenience outlets, and switches. In addition to those shown, there would probably also be a ceiling light in the living room, dining room, and kitchen.

134. WIRING SYMBOLS

Fig. 148 shows a number of the more common symbols used in marking various electrical outlets on the building plans. Examine each of these carefully and become familiar with them, as they will be a great help to you in reading any blue prints supplied either by contractors or architects where the electrical wiring of any building is laid out in advance. A knowledge of their use will also be very handy to you in drawing up a sketch or plan for a building in which you may be laying out the wiring system yourself.

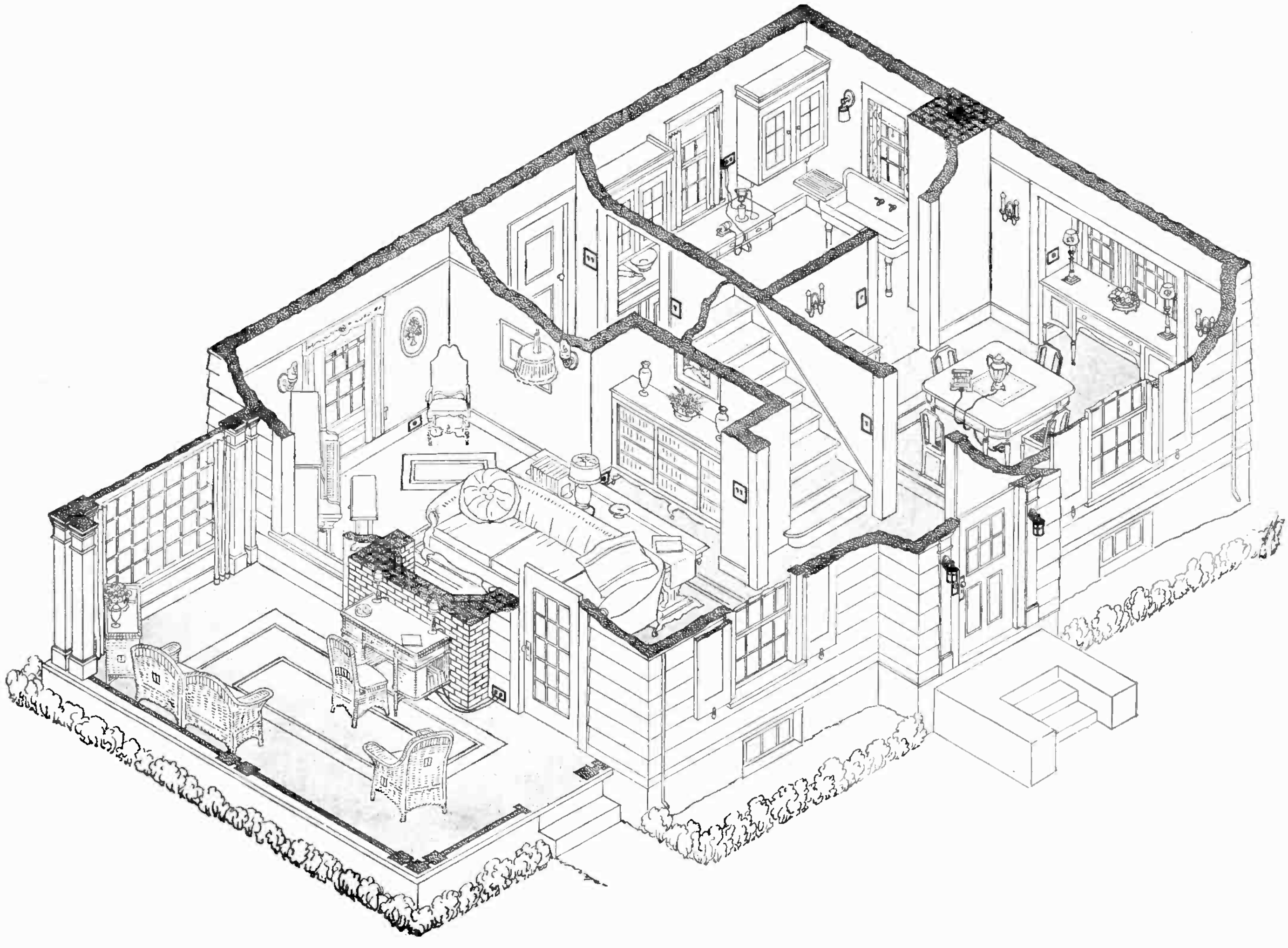

Fig. 147. Sectional view of ground floor of a house, showing the location and arrangement of lights, switches, and convenience outlets.

STANDARD SYMBOLS FOR ELECTRICAL EQUIPMENT OF BUILDINGS

Ceiling Outlet		Automatic Door Switch	S^D	Feeder Run Exposed	-----
Ceiling Fan Outlet		Key Push Button Switch	S^K	Feeder, Run concealed under Floor	— —
Floor Outlet		Electrolier Switch	S^E	Pole Line	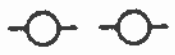
Drop Cord	Ⓓ	Push Button Switch and Pilot	S^P	Push Button	
Wall Bracket	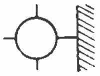	Remote Control Push Button	S^R	Annunciator	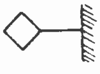
Wall Fan Outlet	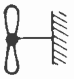	Motor		Interior Telephone	
Single Convenience Outlet	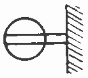	Motor Controller		Public Telephone	
Double Convenience Outlet		Lighting Panel	▬	Local Fire Alarm Gong	
Junction Box	Ⓙ	Power Panel	▨	Local Fire Alarm Station	
Special Purpose Outlet-Lighting, Heating and Power as Described in Specification		Heating Panel		Fire Alarm Central Station	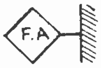
Special Purpose Outlet-Lighting, Heating and Power as Described in Specification		Pull Box	▩	Speaking Tube	
Special Purpose Outlet-Lighting, Heating and Power as Described in Specification		Cable Supporting Box	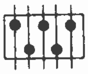	Nurses Signal Plug	
Exit light	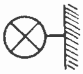	Meter		Maid's Plug	
Pull Switch		Transformer		Horn Outlet	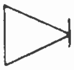
Local Switch- Single Pole	S^1	Branch Circuit, Run concealed under Floor Above	——	Clock (Secondary	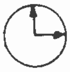
Local Switch- Double Pole	S^2	Branch Circuit, Run Exposed	------	Electric Door Opener	
Local Switch-3 Way	S^3	Branch Circuit, Run concealed under Floor	— —	Watchman Station	
Local Switch-4 Way	S^4	Feeder, Run concealed under Floor Above	——	4 No.14 Conductors in 3/4 in. Conduit Unless Marked 1/2 in.	||||
This Character Marked on Tap Circuits Indicates 2 No 14 Conductors in 1/2-in. Conduit.	||	3 No.14 Conductors in 1/2 in. Conduit.	|||		

Fig. 148. The above wiring symbols with their explanations should be very carefully studied so you will be able to recognize the more common of these symbols readily and easily when working with wiring diagrams or plans. Make a practice of referring to these symbols every time you find one you cannot recognize in a diagram.

135. NEW HOUSE WIRING PLAN

Figures 149 and 150 show the wiring plans for the first and second floors of a modern home. These plans show a very complete system of lights, convenience outlets, three-way switches, etc., such as we would be most likely to install in a new building. Some home-owners might not care to go to the expense of quite as complete an installation as these plans show, but whenever possible the customer should be sold on the idea of wiring the house complete for every possible need when it is erected, as it is so much cheaper to install these things when the house is being built than to put them in afterward. With the ever-increasing use of electrical appliances and light in the home, the owner is likely to regret it later if the home is not quite completely wired. However, it is very easy to leave out a few of the items in a suggested plan of this type, if desired.

By referring to the chart of wiring symbols in Fig. 148, you will be able to recognize each of the outlets in this wiring plan. Check each of them carefully until you have a thorough understanding of the location of each outlet and what they are for.

The dotted lines in these diagrams only show which outlets are connected together, and the runs from the switches to the lamps which they control. The plans do not show where the conduit or BX runs come up from the basement or from one floor to the other.

Several different organizations, such as the General Electric Company and the National Contractors' Association, have some very valuable printed forms, which can be obtained to aid you in listing materials for an estimate; and also sample forms for contracts with the customer. The Society for Electrical Development furnishes valuable material and information, such as the Franklin Specifications and Red Seal Plan for good lighting, which should be of great value to anyone in business for himself.

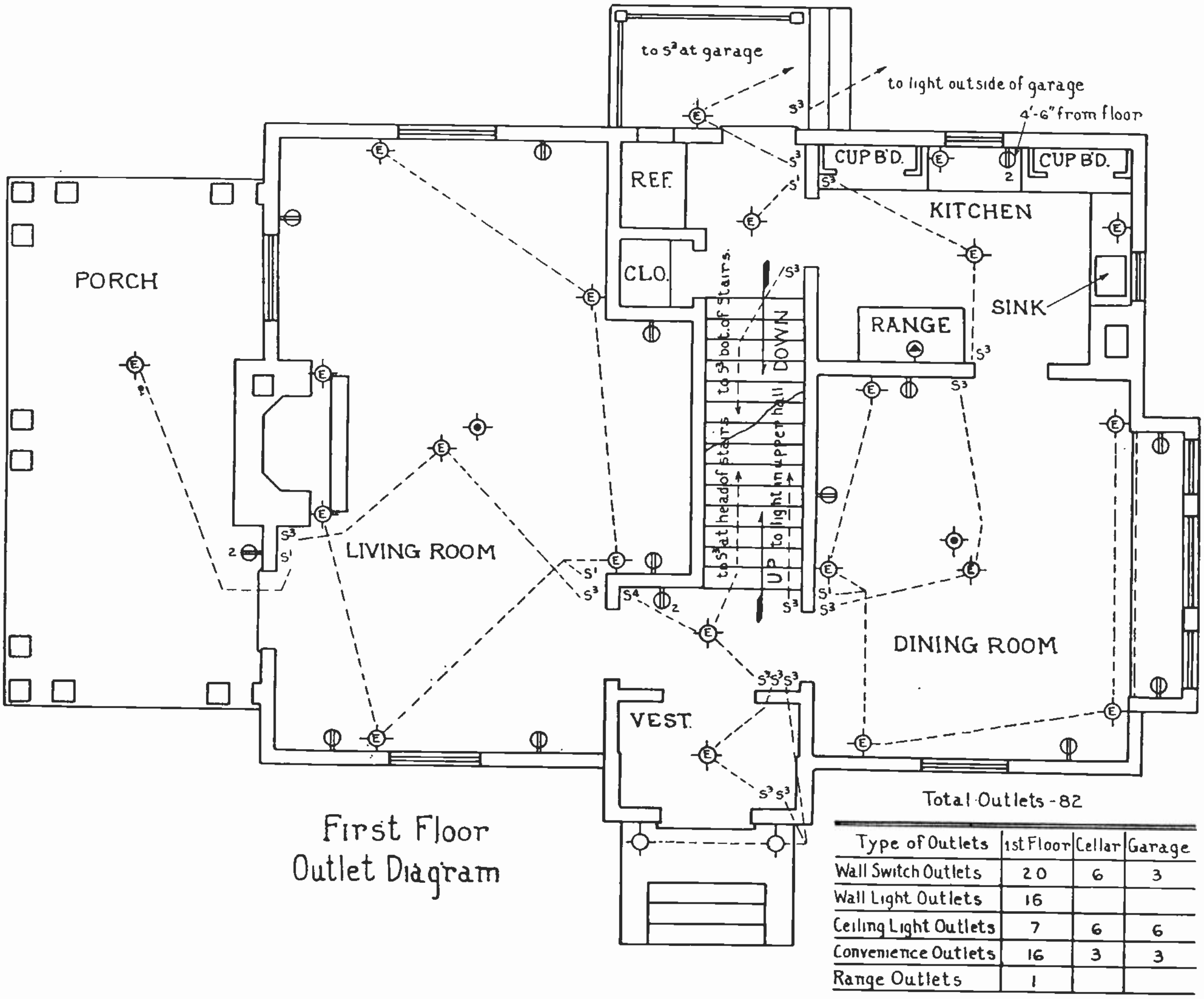

Total Outlets - 82

Type of Outlets	1st Floor	Cellar	Garage
Wall Switch Outlets	20	6	3
Wall Light Outlets	16		
Ceiling Light Outlets	7	6	6
Convenience Outlets	16	3	3
Range Outlets	1		

Fig. 149. This wiring diagram gives a more complete layout of the proper lights, switches and convenience outlets for a modern wiring job in a new building. Compare each of the different outlet symbols with those in Fig. 148.

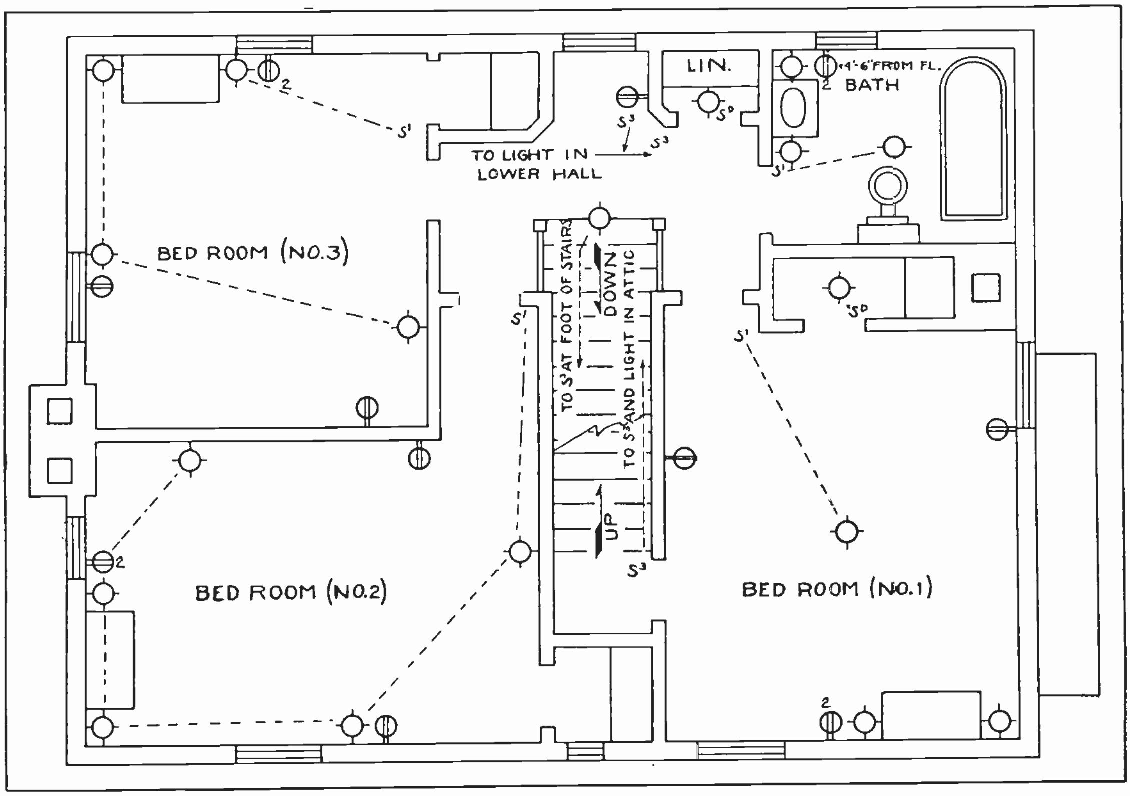

Fig. 150. Second-floor plan and wiring diagram. Note the location of the switches to control the various lights, and particularly the three-way switches for controlling lights from more than one place. Compare this diagram to the one in Fig. 149, to get a complete understanding of the arrangement of switches at the stairway.

136. TOOLS

Perhaps you will wonder how many and what type of tools will be required to start in electrical wiring. It is not necessary to have such a complete or elaborate layout on tools to start your first jobs with. A list of the more common and necessary ones for this type of work are as follows:

Several screw drivers of various sizes
Side-cutting pliers.
7 or 8-inch diagonal cutting pliers.
Long-nosed pliers.
6-inch combination pliers.
8-inch gas pliers.
Claw hammer.
Ballpein hammer.
Wood chisels, one narrow and one wide.
Cold chisel.
Hack-saw frame and blades.
Hand saw.
Key-hole saw.
Corner brace and wood bits.
Hand drill or push drill.
Stillson pipe wrench.
Five-foot rule.
Blow torch and soldering iron.
Two or three putty knives, for prying off wood strips.
100 ft. steel fish tape.

In addition to this list, an electrician who owns his own shop should acquire as soon as possible a boring machine, step ladders, conduit bender, vise, pipe cutter, pipe reamer, stock and dies for threading pipe, and set of star drills. A number of other items will be found convenient as the shop or business grows, and these can be purchased as the profits of the business will pay for them.

TROUBLE SHOOTING

137. TROUBLE SHOOTING

Whether you are employed as an electrical wireman or maintenance man, or in the business for yourself, a great deal of your work may often be what is commonly known as **"Trouble Shooting."**

This covers a wide range, from such small jobs as finding a short circuit in a domestic flat iron to tracing out troubles in a power circuit of some large shop of factory. In any case, it usually requires merely a thoughtful application of your knowledge of circuit tracing and testing. We have previously recommended and will emphasize here again the necessity of **keeping cool** when emergencies of this sort arises, and going about the location of the trouble in a systematic and methodical manner, testing one part of the circuit or system at a time, until the trouble is cornered.

Keep in mind that every trouble shooting problem can be solved, and someone is certainly going to solve it. If you succeed in locating and remedying the trouble, it will always be to your credit, and it may be the source of new business for you or a promotion on the job.

In general, the same methods can be followed for trouble shooting and testing in light and power circuits as have previously been explained in the section on signal wiring. A dry cell and buzzer, taped together and equipped with a pair of flexible leads five or six feet long, is always a handy and use device for this work.

Where part of the system is still "alive", or supplied with current, a pair of test lamps are very handy. These can be connected together in series for 220-volt tests or one can be used separately for testing 110-volt circuits. They are particularly handy when testing for blown fuses, and this test will often locate the whole source of trouble.

138. FUSE TROUBLES

In testing wiring circuits we should first start at the service switch or fuse box. Test to see if the line is alive from the outside service wires, and if it is, then test the fuses. If cartridge fuses are used, testing across diagonally from the service end to the house end, will quickly show which fuse is blown. If the contact springs or clips which hold cartridge fuses are blackened or burned, this is likely to be the cause of the trouble. Sometimes these springs become bent and do not make a good contact to the ferrule on the fuse. This results in a high-resistance connection and heating, which softens and destroys the spring tension of the clips. When clips or springs are found in this condition they should be renewed.

Fig. 151 shows several conditions that will often be found with cartridge fuse clips. When fuses of the cartridge type are found to be blown, it is well to examine them a little before replacing. If the fuse link is found to be blown in the manner shown at "A" in Fig. 152, it is probably caused by a light overload, which gradually heated the fuse to a point where one end melted out. Occasionally you may find the fuse burned in two at the middle and not at the narrow points where it is supposed to blow. This condition is shown at "B", and is sometimes caused by the slow heating of the fuse, and from the heat being conducted away from the ends by the fuse clips, thus causing the center to melt first. When a fuse has been blown from a severe overload or short circuit, it will often be found melted in two at both of the narrow spots, allowing a whole center section to drop out, as in Fig. 152-C. In such cases there will be a tremendous rush of current that may melt the first point open in a fraction of a second, but the extremely heavy current flow may maintain an arc across this gap, long enough to melt out the other weak point also.

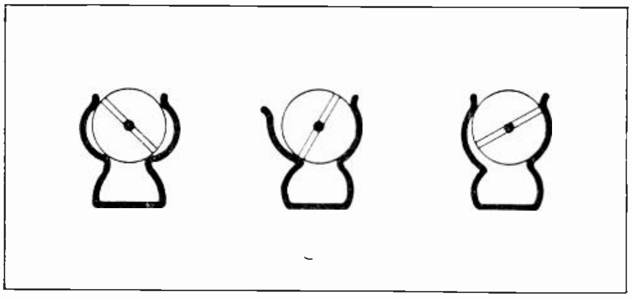

Fig. 151. Fuse clips that are bent out of shape in the manner shown above very often cause heating of the ferrules which results in blown fuses, and other fuse troubles. Burned or weakened fuse clips should be replaced and new ones adjusted to fit the ferrule of the fuse outlet.

With plug fuses, we can also very often tell something of the nature of the trouble by the appearance of the window in the blown fuses. If the window is clear and shows the strip melted in two, it was probably a light overload which blew the fuse. But if the window is badly blackened by a violent blowing out of the fuse, it is usually an indication of a severe overload or short circuit.

139. COMMON CAUSES OF SHORT CIRCUITS

Wherever blown fuses are encountered it is well to check up on possible causes and conditions in the circuits before replacing the fuses. Sometimes we may find that someone had just connected up and tried out some new electrical appliance which may have been defective or of too great a load for the circuit and fuses. Frequently these devices will be found connected up wrong. Sometimes by inquiring of the people on the premises we can find the probable cause of the trouble.

For example, the lady of the house may have been ironing when suddenly there was a flash at the iron, the lights went out, and the iron cooled off. This would probably indicate a defective cord on the iron or a short circuit on the plug or element. In another case one of the children may have stumbled over a cord to a floor lamp causing all the lights to go out, which would indicate that wires were probably jerked loose and shorted at the lamp or plug; or that the insulation of the cord may have been broken through, causing the wires to short within the cord.

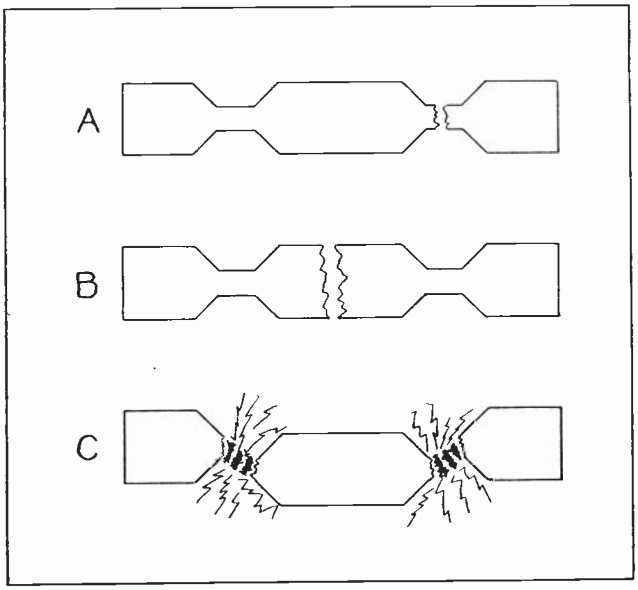

Fig. 152. The above views show several ways in which fuse links may blow. Note particularly the lower view which is the manner in which fuses are often blown by short circuits or severe overloads.

If fuses are blown frequently, it is usually an indication of an overloaded circuit, and in such cases another circuit and set of fuses should be installed. If the circuits are already fused for 15 amperes and are ordinary ones with No. 14 wire, they should certainly not be equipped with larger fuses, as it is in violation of the Code, and the wires might be overheated.

A very handy test for "shorts" is to remove the fuse from the socket and screw a lamp bulb in its place. Then, if the lamp still burns when all the equipment on this circuit is turned off, it indicates a short circuit on the wires.

140. LOCATING SHORT CIRCUITS AND GROUNDS

In locating a short circuit, it is well to see that each light on the circuit is turned off, and each plug removed from any convenience outlets which may be on the circuit. If this does not clear the trouble it indicates that one of these devices is at fault. By having someone watch the test lamp in the fuse socket as these devices are plugged in and switched on again, the one causing the trouble can be found by watching for the instant the lamp lights once more. A great majority of fuse troubles in homes can be traced to defective cords of portable devices.

If removing these devices from the circuit doesn't clear the trouble, then it must be in the wiring. Then we should go along the circuit and open up the outlet boxes, pulling out the splices and even disconnecting them, if necessary, to locate the trouble within one section. In a great majority of cases shorts in the wiring system will be found at poorly taped splices in the outlet boxes. It is very seldom that any defects occur in the wires themselves, especially if they are installed in BX or conduit. Sometimes, however, if repair or construction work has been going on around the building, the trouble may be caused by someone having driven a nail into a piece of non-metallic sheathed cable, metal molding, or even through the light-walled electric metallic tubing, or they may have cut the wires in two with a saw or drill.

Here is another place where inquiry as to what has been happening just before the trouble occurred may help you to locate it.

In shops or factories, blown fuses may be caused by installing additional equipment on certain circuits until they are overloaded, or by the addition of a motor that is too large for the circuit on which it is installed. In other cases a belt may be tightened too much, or the bearings of some machine not properly lubricated, causing a rather severe overload on the driving motor. If the voltage at the service box is too low this will cause motors to draw more than the normal load of current and will blow the fuse.

Whenever some of the lights on any system are found to be burning excessively bright and some of the others very dimly, remember that the cause is likely to be a blown-out neutral fuse on one of the older installations of non-polarized wiring.

The troubles which have been mentioned are some of the most common and are the most frequently encountered. A number of others will come up in your experience, but if you always follow the general methods given in this material and apply your knowledge of circuits and principles of electricity you should have no great trouble in locating them. Every time you find and correct some source of trouble which you have not met before, it should be a source of pleasure and satisfaction to you, because of the added experience it gives and the greater ease with which you will probably be able to locate a similar trouble the next time. So, let us once more recommend that you **always welcome any trouble shooting problem** as a test of your ability and a chance to get good experience.

COYNE
Electrical School

CHICAGO ~ ~ ILLINOIS

ESTABLISHED 1899

ILLUMINATION

Incandescent Lamps, Nature of Light
Illumination Principles, Light Measurement
Reflectors, Light Distribution
Factory Lighting, Office Lighting
Store Lighting
Show Windows, Electric Signs
Flood Lighting, Street Lighting
Aviation Lighting
Mercury Vapor Lamps
Home Lighting

ILLUMINATION

The history of artificial light is a very interesting one, and is almost romantic in many ways.

In a practical Reference Set of this kind we have not much time or space for detailed history, but a few of the high spots in the development of artificial lighting will probably make the study of our present lighting equipment much more interesting, and enable us to more fully appreciate the equipment itself.

Mankind has been trying to create better forms of artificial light for many hundreds of years. Not being satisfied with the daylight hours given them by the sun, men have tried by a number of means to create light, in order to be able to see during the hours of darkness and to make better use of some of this time.

Probably the first artificial lights were burning wood fagots carried about in the hands. Then came the first oil lamps for burning vegetable oils and whale oil from a vessel; and later the lamps with cloth wicks for burning kerosene.

These kerosene lamps are still used by the thousands where electricity is not yet available. But even on farms and in small villages kerosene lamps are rapidly giving way to electric lighting.

Wax and tallow candles were also a popular form of light for many years. Chandeliers, or candle holders, with large numbers of candles in them were used to get a greater source of light for large rooms and auditoriums.

However, all of these sources of light were inclined to flicker and give off smoke and fumes, and were very inconvenient.

141. EARLY ELECTRIC LIGHTS

Up to the time of the development of electric batteries and generators, and less than one hundred years ago, there were no very powerful or steady sources of artificial light.

Electric arcs or flames drawn between two carbon electrodes were one of the first types of electric light, and while they were not entirely steady or free from smoke, they were able to produce great amounts of very bright light.

The first arc lamp to be used commercially was one installed in the Dungeness light house in England in 1862, and from this time on arc lights came into quite general use for lighting interiors of large buildings and for street lighting.

Powerful arc lights of a highly improved type are used today for search lights, flood lights, and in motion picture work; while many of the older types are still in use in street-lighting systems.

142. EDISON'S INCANDESCENT LAMP

From 1840 on a number of experiments were made with incandescent lamps, or the heating of high resistance metal or carbon strips to a glowing temperature by passing electric current through them. But none of these were successful or practical until Thomas A. Edison invented the carbon filament incandescent lamp in 1879, or just a little over fifty years ago.

Edison's first lamps consisted of very thin filaments of carbonized thread, then paper, and later bamboo; all sealed in glass bulbs from which the air was removed by vacuum pumps, to eliminate oxygen and prevent the filament from burning up.

Later lamps of this type were developed with thin metal wire filaments, and the modern incandescent lamp has a tungsten filament, which can be heated to temperatures of 2800 to 3000 degrees centigrade before it will melt. This enables it to operate at glowing white or incandescent heat and give

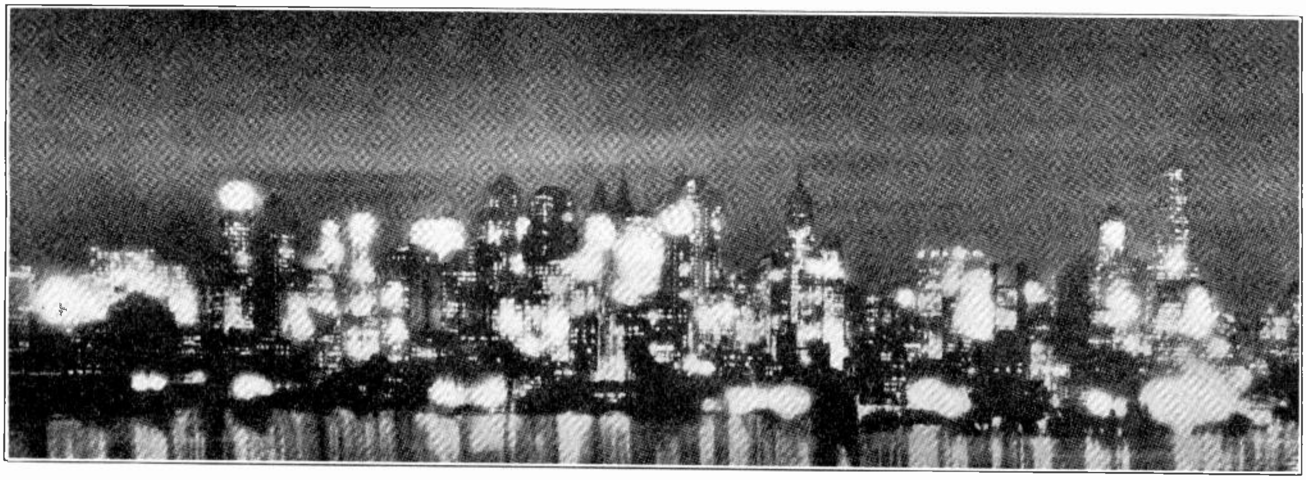

Fig. 152-B This night photograph of the business section of one of our large cities is a good illustration of the extensive use of electric light. A single one of these large buildings will use many thousands of electric lamps.

off great amounts of clean steady light of a nearly white color.

Edison also developed the first efficient electric generators to supply current for his lamps, and in 1882 built in New York City the first central station generating plant for supplying electricity for light and power. From that time on the development of electric lighting has been rapid, and today modern electric illumination is one of the greatest advantages of our civilization, and one of the greatest fields for the trained electrical man to enter.

143. USES AND ADVANTAGES OF ELECTRIC LIGHT

Electric light in the home greatly improves the appearance, increases comfort, speeds the work of the houswife, and reduces eye strain and makes it a pleasure for members of the family to read or study during evening hours. And the cost of electric light is low enough to be within the means of almost every family today. It is cleaner, safer and more convenient than any other form of artificial light we have.

In shops and factories, electric light speeds up production and improves its quality, increases safety and generally improves the morale of employees.

In stores, hotels, and office buildings electric illumination is used on a vast scale and makes the rooms as bright at night as at noon, and whether they have outside windows or not.

The outsides of buildings in cities are beautifully flood lighted and streets are lighted brightly with electric lamps; and now great airplane landing fields have their special lighting equipment which makes them nearly as bright at night as during the day.

Practically every new building erected in any town or city is wired for electric lights, and many older buildings which have not had lights are rapidly being wired for them today.

Thousands of homes, offices, and industrial plants with the older wiring systems are being rewired for modern and efficient electric illumination.

Almost everyone today realizes the value of better lighting; and its advantages and economics are so apparent, when properly presented, that this is one of the greatest fields of opportunity for the trained electrical man who knows the principles of modern illumination.

This field also provides some of the most fascinating and enjoyable work for any branch of the electrical profession.

144. NATURE OF LIGHT

In commencing our study of practical illumination, it will be well to get a general understanding of the nature of light.

Light is energy in wave form, and can be transmitted through space and through certain transparent objects. When these waves strike our eyes, they register through our eye nerves and upon our brain cells an impression which we call light. We are familiar with sound waves and how they are set up by disturbance or motion of air and transmitted by vibration through air, water, and some solids. We also know that electro magnetic waves are set up around conductors carrying electricity. In the case of radio energy, these waves are of very high frequency and short wave length. Light waves are considered to be of an electro-magnetic nature, and are known to be of extremely high frequency and much shorter wave length than the shortest radio waves.

Light is generally the result of intense heat, and the sun is, of course, our greatest source of light.

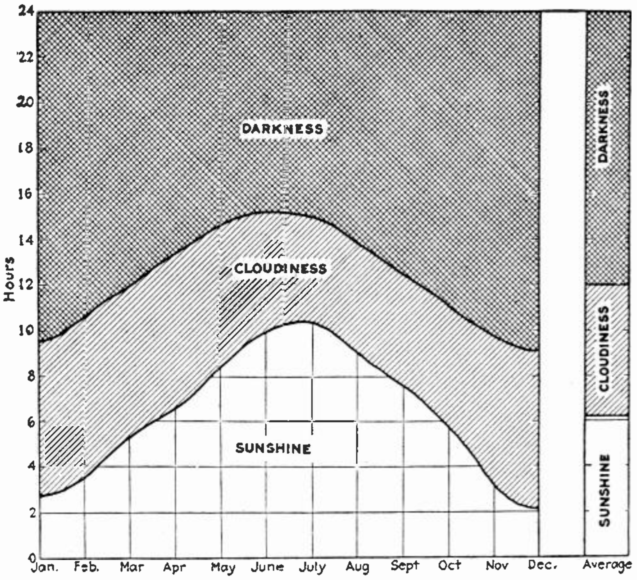

This chart shows how little actual daylight we have over a considerable period of the year

Fig. 152-C. Examine this chart carefully and note the number of hours per day that daylight is available, and you will see how necessary some form of efficient illumination becomes, in order to make good use of the hours of darkness.

145. LIGHT COLORS, WAVE FREQUENCIES

The different colors of light are due to the different wave frequencies. Ordinary sunlight, while it appears white, is really made up of a number of colors. In fact, it is composed of all the colors of the rainbow, and a rainbow is caused by the breaking up or separation of the various frequency waves of sunlight by the mist or drops of water in the air at such times.

White light or daylight is generally the most desirable form for illumination purposes, but it must contain certain of the colors which compose sunlight, as it is the reflection of these various colors from the things they strike to our eyes that enables us to see objects and get impressions of their color. Certain surfaces and materials absorb light of one color and frequency, and reflect that of another color; and this gives us our color distinction in seeing different things.

White and light colored surfaces reflect more light than dark surfaces do.

The ordinary incandescent lamp supplies a good form of nearly white light that is excellent for most classes of work, but for color matching and certain other jobs requiring close separation of colors, a light of more nearly daylight color is needed. For this work lamps are made with blue glass bulbs to supply more of the blue and white light rays, and less of the yellow and red rays of the ordinary electric light bulb. More on the units and measurement of light will be covered later.

146. PRINCIPLES OF GOOD LIGHTING

To secure good lighting, or effective illumination, we must not only **have sufficient light of the proper color, but must also avoid glare and shadows.**

No matter how much light we may have, if there are sources of bright glare in range of the eyes, or definite black shadows from standing or moving objects, it is still not good illumination.

Glare is very tiring to the human eye and we all know that if we look directly at the sun or a bright unshaded light bulb, it is painful to the eyes.

The pupils of our eyes must change their openings or adjust themselves to different intensities of light, and as they do not do this instantly, we cannot see things well when we first look away from a bright light to objects or spaces less brightly lighted.

The same thing applies with shadows which cause dark areas intermixed with the light ones. The eyes cannot change rapidly enough to see well or be comfortable when they must be continually moving from light to shadow, etc.

Glare and shadow are both caused by the same thing in general, or very bright sources of light concentrated in small spots, or a "point source" of light, as we say.

The more the light from a source is concentrated at one point, the brighter will be the glare if we look at this point, and the more distinct will be the shadows of objects illuminated by this source.

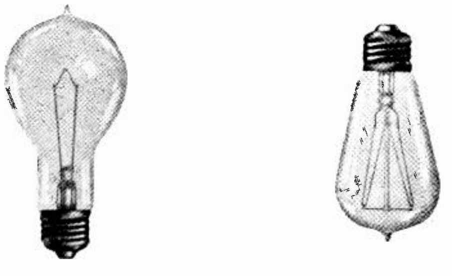

Fig. 153. Two common types of incandescent lamps of which there are many millions in use today.

147. REFLECTORS

While the incandescent lamp is a wonderful, clean, efficient, and convenient source of light, those of the larger sizes are bad sources of glare if they are down within the normal range of vision. This can be avoided by the use of proper shades and reflectors.

Because these lamps have their light produced at one small source, the filament, they are also producers of very definite shadows, unless they are covered with diffusing globes to soften and spread out their light over a greater area.

Reflectors, shades, and diffusing globes for the various classes of lighting installations will be covered a little later.

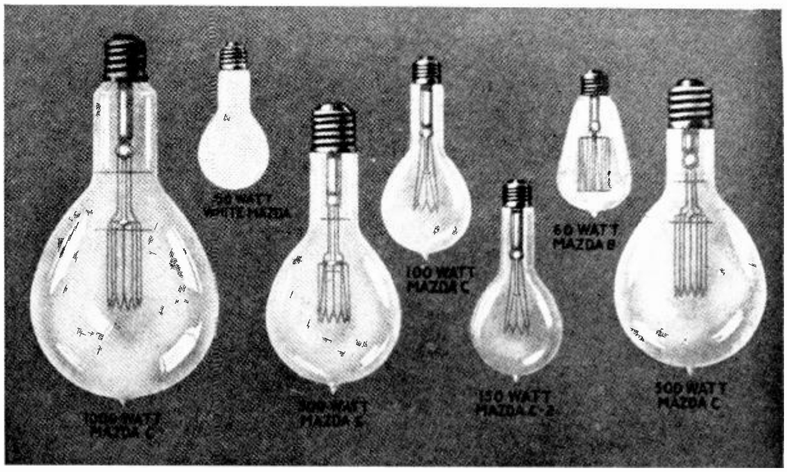

Fig. 154. This view shows various types and sizes of Mazda lamps, ranging from 50 to 1000 watts each.

148. TYPES OF INCANDESCENT LAMPS

Now that we know something of the nature of light and the most important fundamentals of good illumination, let us return to our common source of electric light, the incandescent lamp.

These lamps are now made in sizes from 10 watts to 50,000 watts each, and will fit practically every conceivable lighting need. Lamps smaller than 10 watts are also made, for automobiles, flashlights, etc.

Carbon filament lamps are not used much any more, although they can still be obtained for certain uses where they are desired.

The tungsten filament lamp, which is commonly known as the **Mazda Lamp,** is the one most generally used.

Two of these lamps are shown in Fig. 153. The one on the right is one of the smaller size, which are still used and have the same shaped bulb as the carbon lamps, and are known as type "B". The one on the left is one of the larger sized lamps with the newer shaped bulb, called the type "C".

Fig. 154 shows a number of bulbs of different shapes and sizes, such as are commonly used in general lighting today.

One of the newest styles of lamps is the type "A", which are made in sizes from 15 to 100 watts and are frosted on the inside of the bulb. This is a very great improvement as it softens the light and reduces glare without materially reducing their efficiency. These new bulbs have stronger filaments, and present a beautiful pearl-colored appearance. They are ideal for use where reflectors or bowls are not used over them. Fig. 155 shows four of these type "A" lamps of the more common sizes for home and general lighting use.

The larger Mazda lamps of 150 watts and over are usually made with clear glass bulbs and known as the type "C". As these larger lamps are generally enclosed in diffusing bowls or mounted high up and out of range of ordinary vision, their clear glass bulbs are not objectionable. Fig. 156 shows two of these type "C" lamps, and you will note that they have long necks to keep the heat of the filament farther away from the base and sockets. Some of the larger ones even have a mica heat barrier in the neck, as shown in the right-hand lamp in Fig. 156.

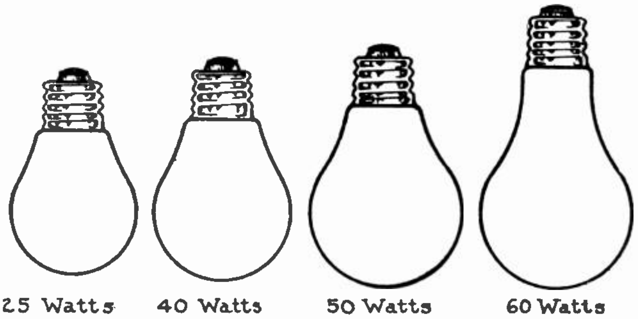

Fig. 155. These four lamps are the sizes most commonly used in general lighting, and show the shape of the newer type bulbs.

The smaller sized lamps have the air withdrawn from the bulbs before they are sealed, so the filaments operate in a vacuum to prevent their burning up, as before mentioned. The larger sizes are filled with an inert gas, such as nitrogen, to keep the filaments from burning up and also to keep the intense heat away from the glass bulb and permit the lamps to be operated at higher temperatures.

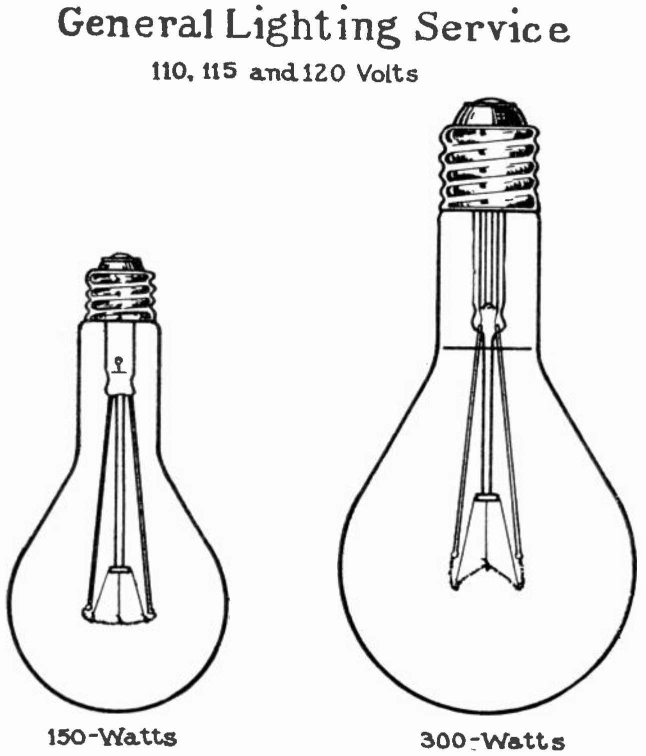

Fig. 156. Two of the larger Mazda lamps, such as used for office and factory lighting. Note the shape of the filament wires and the manner in which they are attached to the heavy "lead-in" wires, and supported by small brace wires.

Fig. 157 shows several types of special bulbs for decorative lights in homes, hotels, theatres, etc. The bulb on the left is an ordinary type "A" in shape, but can be obtained with orange or other colored glass, to give a soft colored light. The others are known as "flame tip" bulbs for candle type fixtures.

The blue glass lamps for producing the "daylight color" for color matching etc., are called the "C-2" type. While this color is very desirable in department stores, art studios, dye plants, etc., the yellower light of a clear bulb would be more desirable in foundries or forging shops, as rays of this color will penetrate a dusty, smoky atmosphere better.

Lamps of 500 watts, 1000 watts, and up are generally used for street lights, flood-lights, motion picture photography, lighting airplane landing fields, etc.

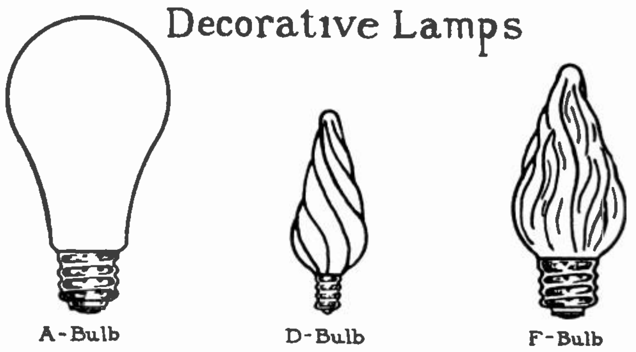

Fig. 157. Lamps of the above type are used for decorative lighting in homes, offices, theaters, etc. The type "A" lamp on the left has the ordinary shaped bulb but can be obtained in various colors.

149. LAMP LIFE AND RATED VOLTAGES

The life of the average Mazda lamp is about 1000 hours of burning time. Many of them will last much longer, as shown by the test data in Fig. 158, but others burn less time and, therefore, make about 1000 hours the average. After lamps have been operated a long time, their light output becomes less until in some cases it is better to discard them than to wait for them to burn out.

Hours Burned	0	200	400	600	800	1000	1200	1400	1600	1800
Number lamps remaining.	100	97	94	89	77	60	39	17	3	0

Fig. 158. These figures, taken from an actual test on 100 lamps, show the life in hours, or the number of hours which the various lamps burned.

These lamps are commonly made for voltages of 110, 115, and 120; and some are made for 220, 240, and various other voltages. The 110 volt lamp is, however, the most common type. These various voltage ratings are obtained by slight changes in the filament resistance of the lamps.

150. EFFECT OF VOLTAGE ON LIFE AND EFFICIENCY OF LAMPS

Incandescent lamps should always be operated at their rated voltage. If they are operated on lower voltages they will not give nearly as much light or be as efficient in the amount of light produced per watt of energy consumed. If they are operated at voltages above their rating, they will burn very bright and operate at higher efficiency, but the life of the filament will be materially shortened. So the best balance between efficiency and lamp life is obtained by operating lamps at their rated voltages. A small change in voltage will make a considerable change in the lamp's efficiency and life, as shown by the table in Fig. 159 for lamps operated 5% below rated voltage. The term "Lumen" is the name of the unit used to measure light delivered by the lamp, and will be explained later.

For Lamps operated at 5% below normal voltage

Lumens will be	17% below normal
Watts " "	8% " "
Efficiency " "	10% " "
Lamp Life " "	Double

Fig. 159. This little table shows how important it is to have incandescent lamps operated at their proper rated voltage.

Fig. 160 shows another illustration of the changes that take place in the watts used and the light produced at different voltages below normal. This test data also shows the amount of electric energy in watts which is wasted when the lamp is operated at lower voltage and lower efficiency.

151. UNITS OF LIGHT MEASUREMENT

Now, before we undertake to plan illumination layouts or select equipment for certain applications, let us find out a little more about actual quantities of light, units of measurement, etc. An understanding of these units and principles is just as important in illumination as Ohms Law is in general electrical work; and you will find them very interesting, as they show us still more about the nature of light.

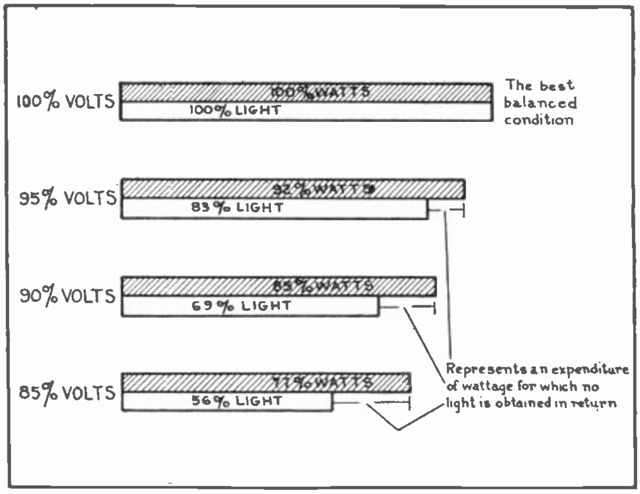

Fig. 160. This chart shows the actual amount of light lost and energy wasted when lamps are operated at less than their rated voltage.

We have been speaking of incandescent lamp sizes and their rating in watts, which is a very convenient term for general use and for buying lamps, etc. While the rating in watts will give us a general idea of the sizes of the lamps, it does not tell us just how much light a certain lamp can be expected to produce.

152. CANDLE POWER AND LIGHT MEASURING DEVICES

Lamps were formerly rated in **Candle Power,** using a standard candle as a basis of comparison.

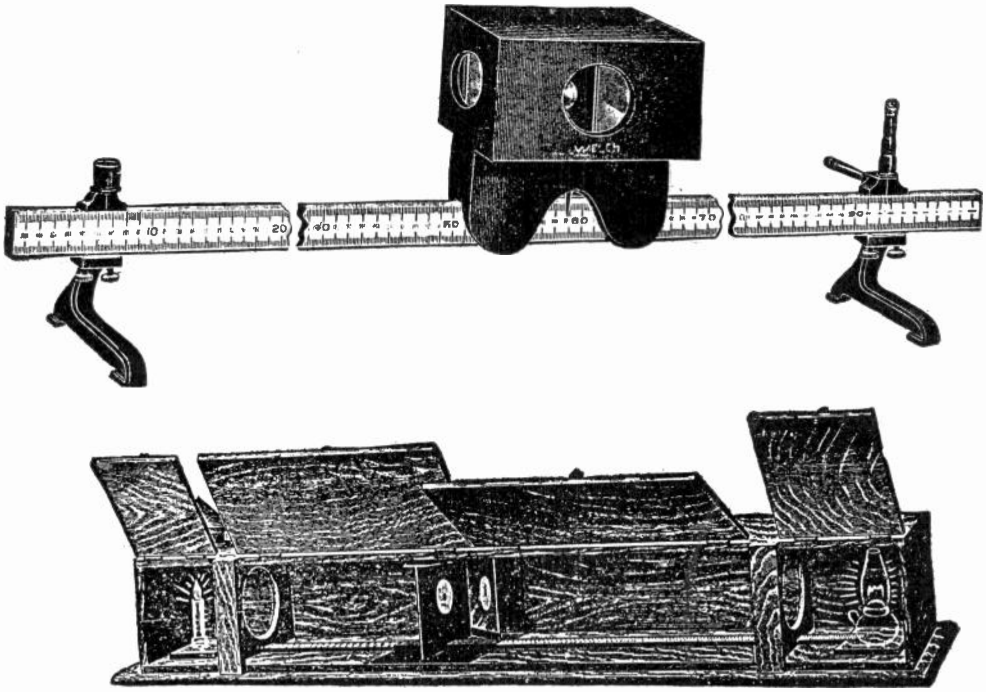

Fig. 161. Two types of photometers, such as used for measuring the light from any source by comparing it with that from a standard source. The readings are obtained from the scales at the point where the light from each source is balanced on the mirror or waxed paper, whichever may be used in the sliding element.

For measuring the candle power of a certain lamp or comparing it with the standard candle, we use a device called a **Photometer.** In principle this device works as follows: A piece of white paper, having in its center a spot which is oiled or greased to make it more transparent than the rest, is held up between the standard candle and the light source to be measured. Let us assume that we first place it exactly half way between them. We will now examine the oiled spot from the side on which our lamp under test is located. If the spot appears dark it shows that there is less light striking it from the candle on the opposite side than from the lamp under test. Then we can move the paper screen closer to the candle until the spot appears to be the same color as the rest of the paper, which will indicate an equal amount of light is striking it on both sides. Then by comparing the distance that the two light sources are from the screen we can find out how much brighter the tested lamp is, or how many candle power to rate it at.

Fig. 161 shows two types of photometers which operate on this principle. The upper one carries a mirror in a sliding dark box, which has small openings in each end for the light to enter from each source. The standard candle and the light to be tested are placed at opposite ends of the marked scale or bar. Then, by moving the mirror box back and forth along the slide until the light on both sides of the oil spot is equal, we locate the balance point, and the candle power of the new source can then be read on the scale at this point. This instrument should be used in a dark room.

The lower device in Fig. 161 has a "grease spot" screen arranged to slide along a scale in a "dark box", and between the two sources of light, until a balance point is found by the appearance of the grease spot as previously explained.

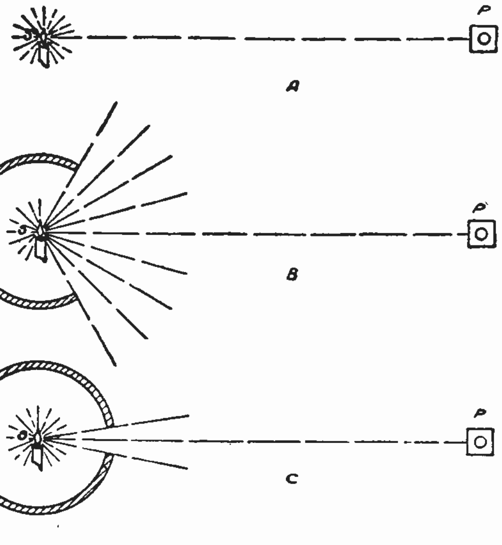

Fig. 162. If we have a photometer or light measuring device at "P," it shows that the amount of light coming in one direction from the candle to the instrument, will remain the same in all three of the above tests.

153. MEAN SPHERICAL CANDLE POWER

This method of measuring or comparing sources of light which we have just described, only takes into consideration the light coming from the source in one direction, or striking an object in one certain spot. For example in Fig. 162 we have a photometer at "P" to measure the light from a candle.

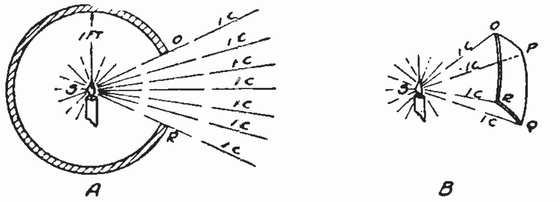

Fig. 163. The "lumen" or unit of light quantity is the measurement of a definite amount of light, such as that which escapes from the opening in the above illustration.

In view "A" the candle is entirely exposed and the photometer gets its reading only from the very small cone of light that comes in its direction.

In "B" we have the candle partly enclosed in a sphere, the inside of which is dead black, so that it absorbs all the light which strikes it and reflects none. The photometer will still read the same, however.

Again at "C" we have the opening closed still more, but the photometer will still read the same as long as the direct beam to it is not interfered with.

So these devices measure only the light coming from a source in one direction, and take no account of that escaping in all other directions.

The light around a lamp may not be quite as bright in all directions, because of the shape of the flame or filament as the case may be. If we measure the candle power in a number of places at equal distances all around a lamp and average these readings, the result is known as the **"Mean Spherical Candle Power".** This comes somewhat closer to giving the total light emitted from the source.

154. LUMENS, UNIT OF LIGHT QUANTITY

For stating the total **amount** of light actually given off by a source we use the unit **Lumen.**

Let us enclose a light which gives off 1 candle power in all directions, in a hollow sphere which has a radius of 1 foot, or diameter of two feet, and the inside of which is dead black so it will reflect no light. See Fig. 163. Now, if we cut a hole in the sphere 1 foot square as shown at OR, the amount of light that will escape through this hole will be 1 lumen. If the area of the opening was ¼ sq. ft., then the light emitted would be ¼ lumen; or if the opening was ½ sq. ft., the escaping light would be ½ lumen; etc. A sphere with a 1-foot radius has a total area of 12.57 sq. ft., so if we were to remove the sphere the total light emitted would be 12.57 lumens.

A Lumen may be defined as the quantity of light which will strike a surface of 1 sq. ft., all

points of which are 1 foot distant from a source of 1 candle power.

From this we find that we can determine the number of lumens of any lamp by multiplying its mean or average candle power by 12.57.

We can now rate or measure in lumens the total light of any lamp, and also compare the number of lumens obtained with the number of watts used by a lamp. All Mazda lamps of a certain size and type will give about the same number of lumens each, but the lumen output per watt, and their efficiency, varies with their size. The larger the lamp the higher the efficiency, and it ranges from about 10 lumens per watt for small lamps to 20 or more lumens per watt on lamps of 1000 watts and larger.

The table in Fig. 164 gives the lumen output of common Mazda lamps and their wattages. These values vary a little from time to time, with the improvement made in lamps, but this table will serve as a convenient guide in selecting the proper size of lamps to get a certain desired amount of light.

LUMEN OUTPUT OF MULTIPLE MAZDA LAMPS

110-115-120 Volt Standard Lighting Service Clear Lamps		110-115-120 Volt Standard Lighting Service Mazda Daylight Lamps		220-230-240-250 Volt Service Clear Lamps	
Size of Lamp in Watts	Lumen Output	Size of Lamp in Watts	Lumen Output	Size of Lamp in Watts	Lumen Output
100	1350	100	900	100	1040
150	2300	150	1500	....	.....
200	3300	200	2100	200	2700
300	5400	300	3500	300	4300
500	9600	500	6200	500	8100
750	14800	....	.....	750	13000
1000	21000	....	.....	1000	18200
1500	33000	....	.....	1500	27300

Fig. 164. This table shows the number of lumens of light delivered by various sizes and types of Mazda lamps, and will be very convenient for future reference on any lighting problems.

155. FOOT CANDLES. UNIT OF ILLUMINATION INTENSITY

Electric lamps are a **source of light,** and the result of this light striking surfaces we wish to see is **illumination.**

While the lumen will serve as a very good unit to measure the total light we can get from any source, we must also have a unit to measure the intensity of light or the illumination on a given surface, such as the top of a desk or work bench, or at the level of work being done on a machine, etc. The unit we use for this is the **Foot Candle.**

A foot candle represents the intensity of illumination that will be produced on a surface that is one foot distant from a source of one candle power, and is at right angles to the light rays from the candle. See Fig. 165. The foot candle, then, is the unit we use in every day illumination problems to determine the proper lighting intensity on any working surface.

Referring again to Fig. 163, we find that the surface O P Q R is illuminated at every point with an intensity of 1 foot candle, and we also know that the total amount of light striking this surface is 1 lumen. This shows the very simple and convenient relation that has been established between these units, in their original selection by lighting engineers. This relation can be expressed as follows: **When one Lumen of Light is evenly distributed over a surface of 1 sq. ft., that area is illuminated to an intensity of 1 foot candle.**

This is a very convenient rule to remember. It shows that, if we know the area in square feet that is to be lighted and the intensity in foot candles of desired illumination, we can then multiply these and find the number of lumens that will be required to light the area. For example, if we desire to illuminate a surface of 50 sq. ft. to an average intensity of 5 foot candles, 250 lumens must be utilized.

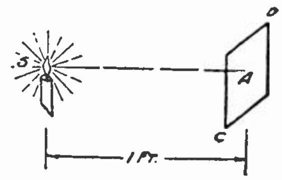

Fig. 165. The unit foot-candle refers to the intensity of illumination on a surface one foot distant from the standard source of one candlepower, as shown above.

156. FOOT CANDLE METER

There are a number of large and elaborate devices used in laboratories for making exact tests and measurements on light and lighting equipment: but for practical convenient use right on the job, the **Foot-Candle Meter** is extensively used.

Fig. 166 shows a foot-candle meter with its carrying case, and Fig. 167 shows a view of the back of one of these meters opened up. They consist of a flashlight battery, small standard lamp bulb, rheostat for adjusting the lamp voltage to proper value, and a voltmeter to check this voltage and make sure the lamp is being operated at proper voltage and brilliancy.

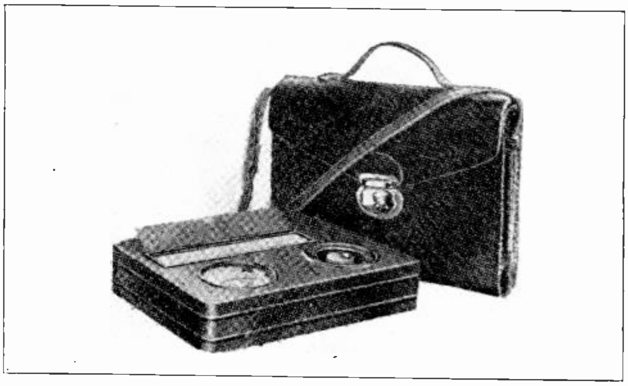

Fig. 166. A foot-candle meter is a very convenient instrument used for measuring illumination intensities right on the job.

In front of the lamp is a long square chamber, over the side of which is placed a piece of tough white paper. Along the center of this strip of paper is a row of uniform grease or oil spots which allow more light to show through them than the rest of the paper.

We all know that the farther any object is from a certain source of light, the less light will strike it. So the oil spots appear quite bright near the lamp, and are gradually dimmer as they get farther away from the lamp. Those still farther away appear darker than the paper, because, with normal light striking the paper from outside the instrument, there is less light behind these spots than on the observer's side, so they appear dark.

This, we find, is the same general principle of the photometer explained earlier. Between the bright appearing spots and the dark appearing ones, there will be one or two that appear the same color as the rest of the paper around them. This is the point at which the light within the instrument is exactly equal or balanced with that striking it from the outside, and at this point we can read the intensity of the outside light in foot candles, on a scale printed along the paper strip.

Fig. 167. This view shows the important parts of a foot-candle meter. Note the arrangement of the standard lamp behind the paper screen, and also the rheostat and voltmeter used in making proper adjustments.

To use a foot-candle meter, the rheostat switch should be turned on and the knob rotated until the voltmeter needle comes up to a mark on its scale, which indicates that the lamp is operating at proper voltage and brilliancy. Then the meter is held face up toward the light source, and at the level of the working surface where the illumination is required. The shadow of your body should not be allowed to fall on the face of the meter during tests. A number of such tests at various places in a room will give the average foot candle intensity and show us whether the illumination is sufficient for the class of work being done.

Tables of proper illumination standards for various classes of work will be given later.

The standard foot-candle meter is made to read intensities from 1 to 50 foot candles. It is possible to test intensities lower and greater than this by operating the lamp in the meter at less or more than its rated voltage, by setting the rheostat to hold the voltmeter needle at the extra marks which are provided for this purpose on the scale.

Ordinary daylight is far too bright to measure with these meters and is of a color that does not match the meter lamp accurately.

On a normal summer day with the sun shining, the intensity of illumination outdoors may be 500 foot candles even in the shade, and 5000 to 8000 in the direct rays of the sun.

157. INVERSE SQUARE LAW FOR LIGHT

We have already mentioned that the farther any object is from a source of light, the less light it receives from that source.

A very important rule to remember is that **the illumination on a surface varies directly with the candle power of the source of light, and inversely with the square of the distance from the source.**

So we find that a small change in distance from a light will make a great change in the illumination on an object. The reason for this is illustrated in Fig. 168. Here we have a standard candle, and if the surface at "A" is 1 foot from the candle, its illumination intensity will be 1 foot candle. If we move the surface or plane to "B", which is two feet from the source, the same number of light rays will have to spread over four times the area, as that area increases in both directions. Then the illumination intensity at double the distance is only ¼ what it was before, as the distance or 2 squared is 4, and this is the number of times the illumination is reduced.

If we move the surface to "C", which is 3 feet away from the light source, the rays now are spread over 9 times the original areas, and the intensity of illumination on the surface will now be only 1/9 of its former value, or 3^2 equals 9. So we call this the **Inverse Square Law for Light.**

158. LIGHT REFLECTION

We all know that light can be reflected from certain light-colored or highly-polished surfaces. This fact is made good use of in controlling and directing light in modern illumination.

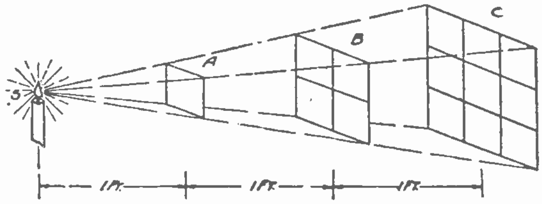

Fig. 168. Note how the illumination intensity becomes less on any surface as its distance from the light source increases. The farther the surface is from the source, the greater the area a given number of light rays must be distributed over.

Some surfaces and materials are much better reflectors than others. Generally the lighter the color, or higher the polish of a surface, the more light it reflects, and the less it absorbs.

The percentages of light that will be reflected from some of the more common materials are as follows:

Highly polished silver	92%
Good silvered-glass mirrors	70% to 80%
White blotting paper	82%
Yellow paper	62%
Pink paper	36%
Dark brown paper	13%

The better classes of reflectors are used in directing the light of sources where we want it. The ordinary colors and their reflecting ability must also often be considered in lighting interiors of buildings.

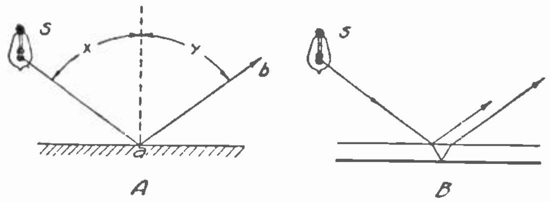

Fig. 169. Note the angle of light reflection from a smooth surface as shown at "A." The illumination at "B" shows how light is reflected from both surfaces of a piece of silvered glass.

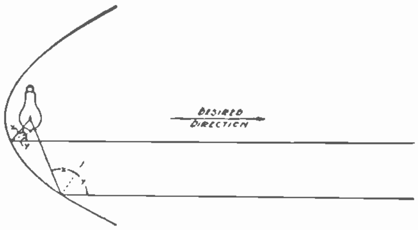

Fig. 170. This illustration shows how a curved reflector can be made to send all the light rays from a source in one direction. The shape of such a reflector is called a "parabola."

159. CONTROLLING AND DIRECTING LIGHT WITH REFLECTORS

Bare incandescent lamps are wonderful sources of light, when we consider their efficiency and the quantity and quality of light they produce, but they are very wasteful in the directing of that light to the places where we generally use it.

Bare Mazda lamps are a source of bad glare which is very tiring to the eye, and they create bad shadows which impair vision and are likely to cause accidents in industrial lighting.

Fig. 171. Above are shown several types of porcelain enameled, metal reflectors. Note how their various shapes give different distribution of the light, as shown by the curves under each reflector.

A bare lamp also wastes a great deal of its light which goes upwards and sidewise and not down as we usually want it to. So, to direct the light as desired, we use reflectors with the proper shapes and curves. These reflectors turn back the light that would otherwise go up and sidewise, and send it down either in a broad or narrow beam as desired.

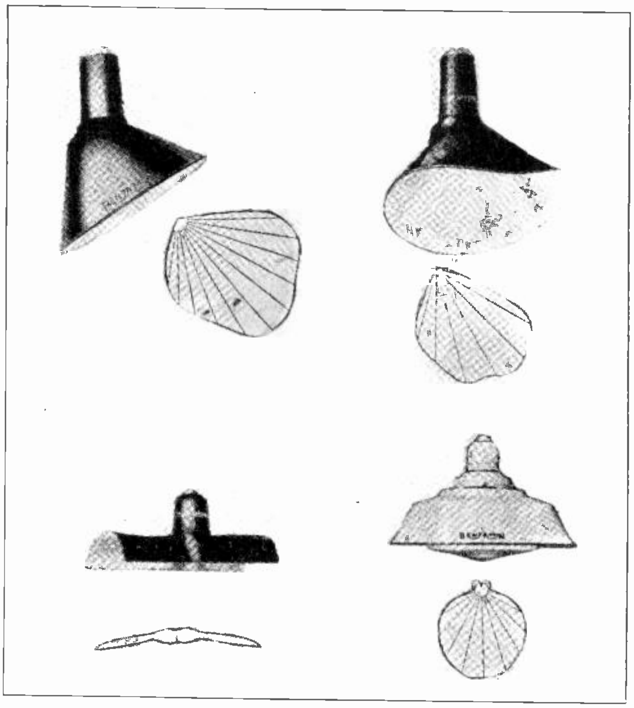

Fig. 172. The two top reflectors and the one at the lower left show how light can be controlled in any direction desired, by using the proper shape of reflector. The unit at the lower right shows a reflector which also has a glass diffusing bowl.

160. TYPES OF REFLECTORS

Fig. 171 shows several types of metal reflectors of different shapes, and beneath each one is shown the characteristic curve of light distribution for that type of reflector. From these curves it will be seen that the curvature of a reflector can be made to spread or concentrate the light more or less, as desired.

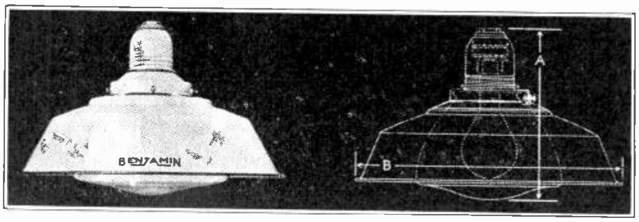

Fig. 173. This larger view of the diffusing unit shows the position of the bulb and glass bowl in the reflector. This is a very efficient and popular type unit for factory lighting and other similar work. (Illustration Courtesy of Benjamin Electric Co.)

Fig. 172 shows several other types of reflectors. The upper two are used for throwing the light to one side and downward, and the lower left one for spreading the light in two narrow horizontal beams. The lower right hand unit is a combined reflector and glass diffusing bowl.

The ordinary reflectors direct the light downward and shield the eyes from side glare of the lamps. This is often sufficient when the lamps are mounted high enough to be out of range of vision.

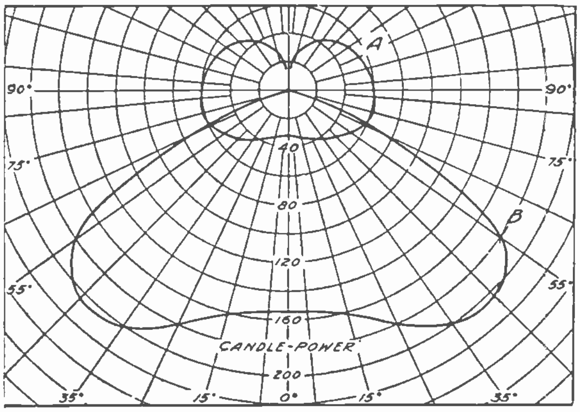

Fig. 174. This shows the manner in which the light distribution from a lamp or reflector can be plotted on a chart, to give a characteristic curve for that light or reflector.

The reflector unit with the glass bowl reflects the light downward, and the bowl enclosing the bulb has a milky white color and spreads or softens the light from the bulb so there is no glare even when looking up at the unit from underneath. Broadening the source of light in this manner also softens the shadows a great deal, making this type of lighting unit a very popular one for commercial and industrial buildings.

Fig. 173 shows a larger view of this unit and also a sketch which shows the shape of the glass bowl and the location of the lamp. These units have ring-shaped slots in the top of the reflector to allow a small amount of light to reach the ceilings, and eliminate the dark spots that would otherwise be above a metal reflector and cause quite a contrast to the lighter areas around them.

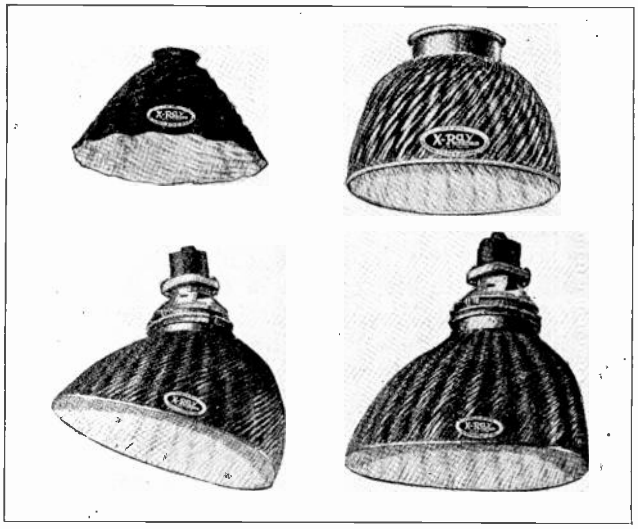

Fig. 175. Corrugated, mirrored glass reflectors of the above type are very efficient in preventing side glare and directing light downwards to the surface where it is desired.

161. ENAMELED METAL REFLECTORS

The inside surfaces of metal reflectors of the types here shown are covered with heavy white porcelain enamel, to give them a high reflecting efficiency. While polished metal can be used as a reflector it usually tarnishes in a short time and is then not much good. So porcelain enamel or glass is better.

Fig. 174 shows a curve of light distribution, and also the manner in which the various candle-power measurements are plotted on the chart to indicate the illumination intensities at different points along the curve.

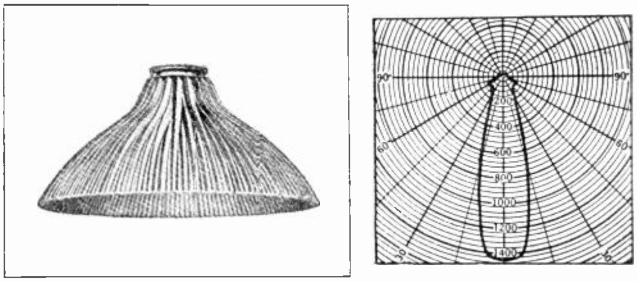

Fig. 176. Corrugated glass reflectors of this type break up or diffuse the side rays from a lamp and also reflect a greater portion of the light downwards, as shown in the curve at the right.

162. MIRRORED GLASS REFLECTORS

Glass shades and reflectors are also used extensively where there is not too great danger of breakage. Some glass reflectors have the outside silvered and then covered with dark paint. The silvered surface makes the inside of the unit of higher reflecting efficiency, and the dark paint stops all side light and glare.

Fig. 175 shows several types of glass reflectors of this kind. You will note that the glass is corrugated to break up the light rays, diffusing them enough to prevent reflection of the sharp outlines of lamp filaments. If this is not done the light from such a reflector might cause spots of glare on bright metal surfaces if they were worked upon under these lights.

Another type of glass reflector in quite common use is the sharply corrugated type shown in Fig. 176. These reflectors break up the light from the bulb enough to reduce the side glare considerably. While they don't soften the light source as much as some of the other types, they are very good for certain applications. Note the curve of light distribution for the reflector in Fig. 176 which shows that this type of unit directs a greater part of the light downward.

Fig. 177 shows one of these glass reflectors with a special type of holder which allows them to be easily removed for cleaning. This reflector has a different shape from the one in Fig. 176, which you will note changes its light distribution curve considerably.

163. PRISMATIC REFLECTORS

This type of glass reflector is made with grooves running in both directions, so that its outer surface

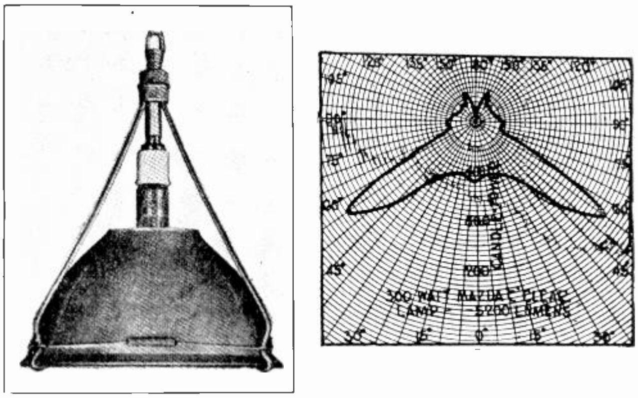

Fig. 177. These glass reflectors mounted in convenient hangers, as shown above, are very commonly used in factory lighting and in some classes of general office lighting.

in reality consists of a number of little prisms, which very effectively break up or diffuse the light. These reflectors present a very good appearance and are quite frequently used in office and store lighting. Fig. 178 shows three units of this type. You will note that the bulbs are entirely enclosed with these fixtures, so there is no chance of any direct glare from the lamp.

164. OPAL GLASS REFLECTORS AND DIFFUSING BOWLS

Glass lighting fixtures using white or opal-colored glass are made in a great variety of shapes and sizes for general lighting and offices and stores. Opal-colored glass diffuses the light very effectively, and thus softens the source so there are practically no glare and shadow effects if the fixtures are properly installed.

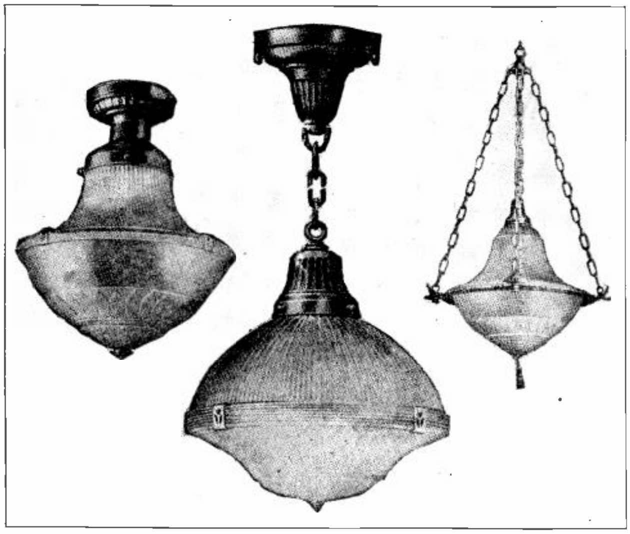

Fig. 178. Several styles of prismatic glass lighting units. Note that these units completely enclose the lamp so that all light is diffused or softened before reaching the eye.

There are two different grades of opal glass, known as light opal and dense opal, either of which will, of course, absorb or stop a certain amount of light from the bulb. But this small loss is more than made up for in the greater efficiency of lighting which is free from glare and shadows. Persons can actually see much better with a little less light if these effects which are so tiring to the eye are not present.

Fig. 179 shows two types of glass bowls of a very popular style. These are fastened in the metal canopy with thumb screws, which can be seen in this illustration. This enables the globes to be easily removed for cleaning and replacing the bulbs. When attaching the globes to a fixture of this type, the thumb screws should be tightened firmly and evenly; but not too tight, as it is possible to crack the glass globe in this manner.

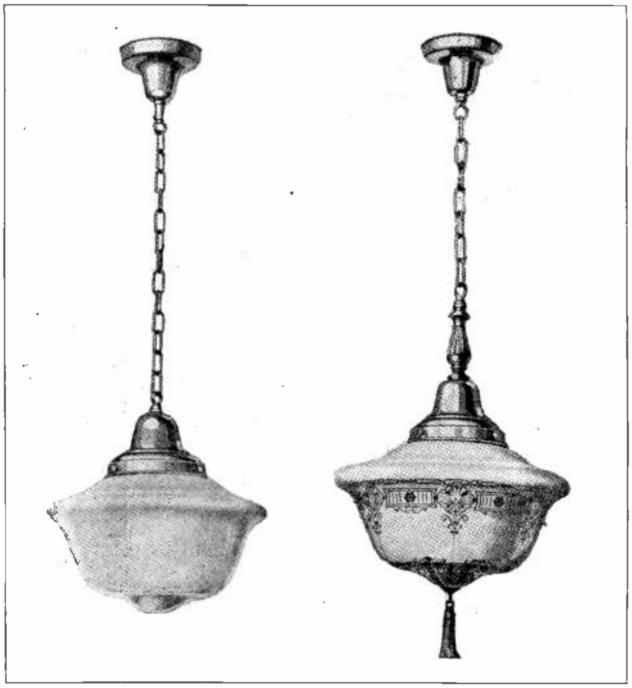

Fig. 179. Enclosing glass bowls with milky white or opal colored glass, make very efficient units for office lighting.

Fig. 180 shows two styles of glass fixtures which are made for mounting closer to the ceilings.

Glassware or fixtures of the types here described can be plain opal-colored, or made more ornamental with decorative painting on the outside. These decorations, of course, reduce the efficiency of the fixture somewhat by absorbing a certain amount of light. Fig. 181 shows another popular type of glass fixture in which the lower part of the bowl is opal-colored and the upper part is clear glass. Then, above the bowl, is suspended a broad opal reflector. The clear glass in the top of the bowl allows considerable light to go upward and strike the under side of the opal reflector, from which it is again deflected downward to the working surface. Glass lighting fixtures of these types allow a certain amount of light to go upward, lighting the ceilings more or less uniformly, and present a very cheerful appearance as well as softening the light generally and reducing shadows.

165. GENERAL CLASSES OF LIGHTING UNITS

Lighting fixtures are often classed in three general divisions called:—Direct, Indirect, and Semi-

Indirect. The direct lighting fixture is one from which the greater part of the light comes directly from the bulb down to the working plane. The metal and glass reflectors of the first types described come in this class. The indirect lighting fixture is one in which no light comes directly down from the bulb to the working plane, but instead is all first thrown upward to the ceiling or to a broad reflector above and then directed downward. Lights of this type are used where it is very essential to avoid even the slightest glare and to eliminate shadows almost entirely. With such fixtures we might say that the ceiling is our secondary source of light; and as we know that shadows are more pronounced when the light comes from small "point" sources, we can readily see that light coming from the broad area of a ceiling would produce almost no shadows.

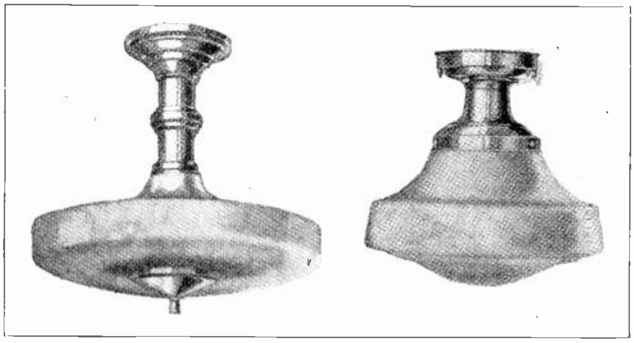

Fig. 180. Short fixtures of the type shown above can be used for mounting close to the ceiling in low rooms.

Fig. 182 shows a view in a drafting room which is lighted with indirect fixtures of this type. You will note that the light is all directed first to the ceiling and produces a very uniform light throughout the entire room. While this type of light is a little more expensive and requires more lamps and current than a direct lighting installation, it is one of the very best classes of installations where exacting work is to be done.

Fig. 181. This fixture has a bowl, the lower part of which is white to diffuse the light, and the upper part is clear to allow the light to go upward and strike the reflector, from which it is directed back to the working surface in a well diffused manner.

Semi-indirect fixtures are those from which part of the light is directed downward through a diffusing globe, and the balance is thrown upward, and then reflected back by the ceiling. Some fixtures are also classed as **Direct Diffusing,** because while practically all of their light is thrown directly down to the working plane, it must pass through a diffusing bowl as with some of those previously described.

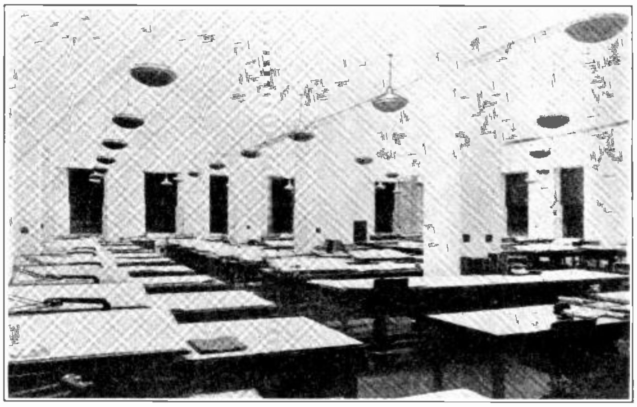

Fig. 182. This drafting room is lighted with indirect fixtures which throw their light to the ceiling first. The ceiling then reflects it downward to the working surface.

166. DEPRECIATION FACTOR

Almost all lighting fixtures are subject to a very definite reduction in efficiency from the collection of dust and dirt on their light transmitting or reflecting surfaces. Few people realize what an effective absorber of light a thin film of dust actually is.

In some installations where a beautiful selection of fixtures has been made and the lighting is of very sufficient intensity when the installation is new, after a few months the dirt that is allowed to accumulate on the fixtures absorbs from ¼ to ¾ of the light. This is particularly true in certain industrial plants where smoky, oily, and dusty atmospheres exist. Fig. 183 shows an actual view of a fixture of which one side has been cleaned and the other side left with the remaining accumulation of oil and dirt. This is undoubtedly a worse case than is ordinarily encountered, but it serves as a good illustration of the necessity of keeping fixtures clean. Regardless of the amount of money spent

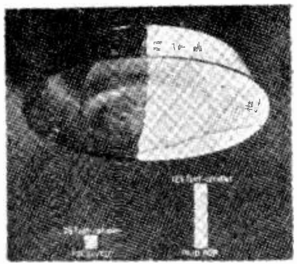

Fig. 183. This is an actual photo showing how much of the light can be lost if the reflectors are not kept cleaned.

in purchasing fixtures that will eliminate glare and shadow, a great deal of the electricity used will be wasted and the lighting will be unsatisfactory if the fixtures are not kept clean. An occasional washing with soap and water will remove ordinary dust and dirt from lighting fixtures, and where necessary special cleaners can be employed.

Of course, it is impossible to prevent some dust and dirt from accumulating, even if the fixtures are cleaned frequently; so when we are selecting fixtures we generally allow a certain amount for this **Depreciation Factor.** This will vary from 1.2 to 1.6, and a good, safe average value to use is 1.4. This means that in planning a lighting installation, after determining the foot candles of lighting intensity that would be required to produce the desired illumination, we should then multiply this by the figure 1.4, to have enough light reserve to keep the lighting satisfactory in spite of ordinary depreciation.

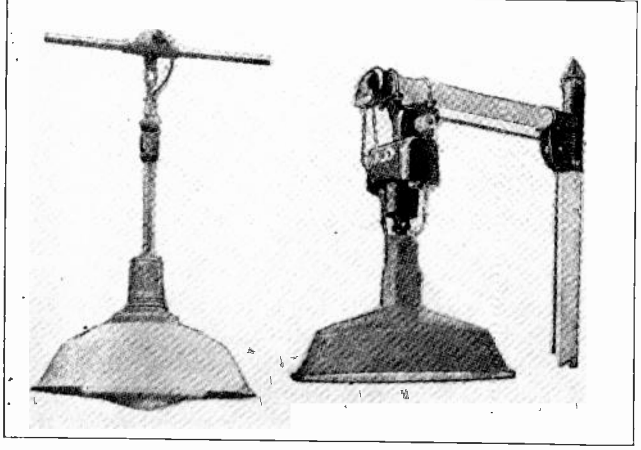

Fig. 183-B. Special hangers of the above type are often used with lamps which are mounted very high in shops or factories. They allow the lamps to be lowered with a chain for convenient cleaning and repairing.

Some fixtures, of course, collect more dust than others in the vital places where it interferes with their light distribution. In some cases when buying fixtures, the depreciation factor for that particular type will be given by the manufacturer or dealer, but when this value is not known, the average factor of 1.4 can be generally used.

167. COEFFICIENT OF UTILIZATION

Another very important item to consider in planning a lighting installation is what is called the **Coefficient of Utilization.** You will recall that earlier in this section we mentioned that, if we knew the number of square feet that had to be illuminated and the foot-candle intensity to which it was desired to illuminate the area, the product of these values would give the lumens that would have to be utilized to produce the desired illumination.

When we say these lumens must be utilized we mean that they must be effectively used and not absorbed or wasted in other places besides the working surfaces. Only a part of the total light emitted by any lamp reaches the working plane, as a certain amount will be absorbed by the reflector or enclosing glassware of the fixture, and some will be absorbed by the walls, ceilings and other objects. In some cases part of the light that is directed upwards and sidewise from the fixture is again reflected to the working surface.

The coefficient of utilization therefore refers to the percentage of light used at the working plane.

So we find that the coefficient of utilization depends on the type of fixtures; and on the color of walls and ceilings to quite an extent, as the darker colors absorb and waste much of the light from the source, while light colors reflect more of the light which strikes them back to the working surface.

Under average conditions a unit of the type shown in Fig. 173 has a coefficient of utilization of about .70.

Fig. 184 shows a table of coefficients of utilization for various types of reflectors. You will note that the figures given vary for light or dark walls and ceilings.

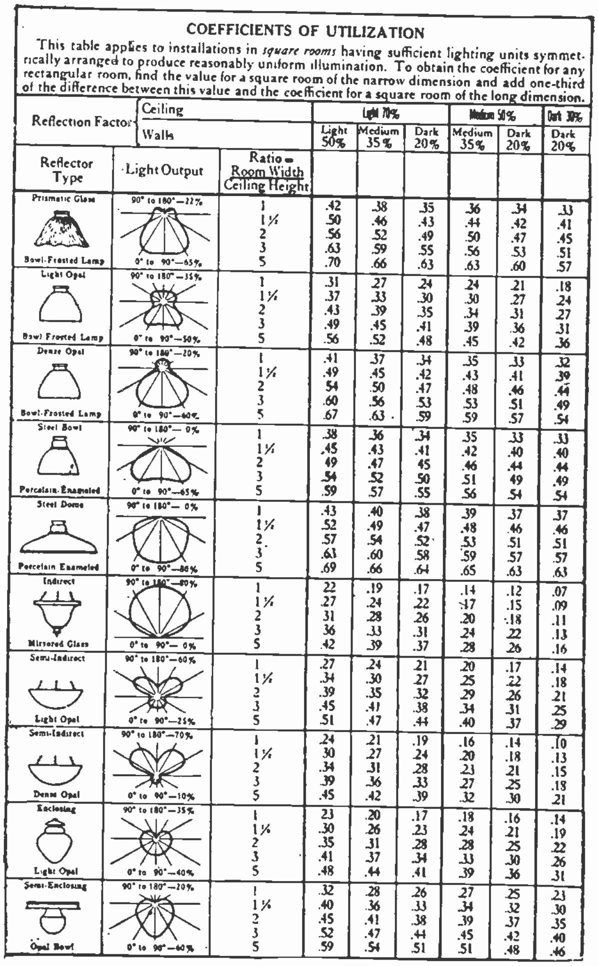

COEFFICIENTS OF UTILIZATION

This table applies to installations in *square rooms* having sufficient lighting units symmetrically arranged to produce reasonably uniform illumination. To obtain the coefficient for any rectangular room, find the value for a square room of the narrow dimension and add one-third of the difference between this value and the coefficient for a square room of the long dimension.

Reflection Factor	Ceiling		Light 70%			Medium 50%		Dark 30%
	Walls		Light 50%	Medium 35%	Dark 20%	Medium 35%	Dark 20%	Dark 20%
Reflector Type	Light Output	Ratio = Room Width / Ceiling Height						
Prismatic Glass Bowl-Frosted Lamp	90° to 180°—22% 0° to 90°—65%	1	.42	.38	.35	.36	.34	.33
		1½	.50	.46	.43	.44	.42	.41
		2	.56	.52	.49	.50	.47	.45
		3	.63	.59	.55	.56	.53	.51
		5	.70	.66	.63	.63	.60	.57
Light Opal Bowl Frosted Lamp	90° to 180°—35% 0° to 90°—50%	1	.31	.27	.24	.24	.21	.18
		1½	.37	.33	.30	.30	.27	.24
		2	.43	.39	.35	.34	.31	.27
		3	.49	.45	.41	.39	.36	.31
		5	.56	.52	.48	.45	.42	.36
Dense Opal Bowl-Frosted Lamp	90° to 180°—20% 0° to 90°—60%	1	.41	.37	.34	.35	.33	.32
		1½	.49	.45	.42	.43	.41	.39
		2	54	.50	.47	.48	.46	.44
		3	.60	.56	.53	.53	.51	.49
		5	.67	.63	.59	.59	.57	.54
Steel Bowl Porcelain-Enameled	90° to 180°— 0% 0° to 90°—65%	1	.38	.36	.34	.35	.33	.33
		1½	.45	.43	.41	.42	.40	.40
		2	49	.47	45	.46	.44	.44
		3	.54	.52	.50	.51	49	.49
		5	.59	.57	.55	.56	.54	.54
Steel Dome Porcelain Enameled	90° to 180°— 0% 0° to 90°—86%	1	.43	.40	.38	.39	.37	.37
		1½	.52	.49	.47	.48	.46	.46
		2	.57	.54	.52	.53	.51	.51
		3	.63	.60	.58	.59	.57	.57
		5	.69	.66	.64	.65	.63	.63
Indirect Mirrored Glass	90° to 180°—80% 0° to 90°— 0%	1	22	.19	.17	.14	.12	.07
		1½	.27	.24	.22	.17	.15	.09
		2	31	.28	.26	.20	.18	.11
		3	36	.33	.31	.24	.22	.13
		5	.42	.39	.37	.28	.26	.16
Semi-Indirect Light Opal	90° to 180°—60% 0° to 90°—25%	1	.27	.24	.21	.20	.17	.14
		1½	.34	.30	.27	.25	.22	.18
		2	.39	.35	.32	.29	.26	.21
		3	.45	.41	.38	.34	.31	.25
		5	.51	.47	.44	.40	.37	.29
Semi-Indirect Dense Opal	90° to 180°—70% 0° to 90°—10%	1	.24	.21	.19	.16	.14	.10
		1½	30	.27	.24	.20	.18	.13
		2	.34	.31	.28	.23	.21	.15
		3	.39	.36	.33	.27	.25	.18
		5	.45	.42	.39	.32	.30	.21
Enclosing Light Opal	90° to 180°—35% 0° to 90°—40%	1	23	.20	.17	.18	.16	.14
		1½	.30	.26	.23	.24	.21	.19
		2	.35	.31	.28	.28	.25	.22
		3	.41	.37	.34	.33	.30	.26
		5	.48	.44	.41	.39	.36	.31
Semi-Enclosing Opal Bowl	90° to 180°—20% 0° to 90°—60%	1	.32	.28	.26	.27	.25	.23
		1½	.40	.36	.33	.34	.32	.30
		2	.45	.41	.38	.39	.37	.35
		3	.52	.47	.44	.45	.42	.40
		5	.59	.54	.51	.51	.48	.46

Fig. 184. This table shows the percentage of light which we can expect to obtain at the working surface, from lamps used in different types of reflectors, and in rooms of different shapes. Note that the color of walls and ceilings also influences this percentage.

The ratio of the room width to its ceiling height is also considered, because in narrow high rooms more of the light strikes the walls. In wide rooms

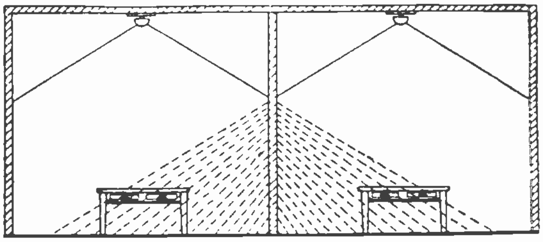

Fig. 185. This sketch shows how the walls of narrow rooms absorb a certain amount of the light. If the wall in this case was removed and the room was twice as wide, note how the light beams from the two lamps would overlap and produce more light on the benches.

which are not obstructed by partitions, the light from the several lamps overlaps and not as much of it is absorbed by walls; thus the utilization factor is raised somewhat. Fig. 185 shows a sketch of a room and what the effect on the light would be, both with and without the center partition.

Fig. 186 shows the amount of light absorption and reflection obtained from painted walls and ceilings of different colors, and from this we can see that in many cases it would pay to coat them with white or light colored paint, to reduce light waste by absorption. The white or lighter colored paints greatly improve the utilization factor by increasing reflection.

168. WORKING PLANE

Now that we have considered some of the more common types of lighting units for industrial and commercial lighting and some of the important points governing their efficiency, let us find out something about the proper location and arrangement of lights to obtain best results and efficiency.

In mounting fixtures for industrial or commercial lighting we must consider the distance the light will have to travel from them to reach the **Working Plane.** This term refers to the level at which the light is used. In an office, it may be the top of the desk; or in a drafting room, the top of the tables; in a store, the counter top; and in a machine shop, the height of the machine or bench at which the operator works.

As it is very seldom that the maximum light is wanted at the floor, we must plan to obtain the proper intensities at the working plane.

Examination of the equipment or work in a room or building, will readily show at what height from the floor the working plane is: but if no measurements can be made, it is usually assumed to be about 2½ feet from the floor.

169. MOUNTING HEIGHT

The next important point to consider in the location of the fixtures is the proper **Mounting Height.** This is the perpendicular distance from the working plane to the source of light: and it is, of course, this distance that affects the coefficient of utilization and the light intensity obtained at the working plane.

The distance from the floor to the ceiling in any room is called the **Ceiling Height.**

With direct lighting the source of light is the lamp itself and its reflector. In indirect and semi-indirect lighting the source is considered to be at the ceiling. Fig. 187 illustrates this.

170. NUMBER AND LOCATION OF LIGHTS

In general, we should never try to skimp on the number of lights or lighting circuits when planning a lighting installation. If good lighting is economy, then it is certainly false economy to try to save on wiring materials or fixture costs by cutting down on the number of lighting outlets or trying to spread them as far apart as possible.

At the rate standards of lighting are improving today in all classes of up-to-date buildings, it is far better to plan for the future and to put in adequate lighting while it is being installed.

Best results can be obtained by having sufficient outlets close enough together to give even distribution and uniform lighting.

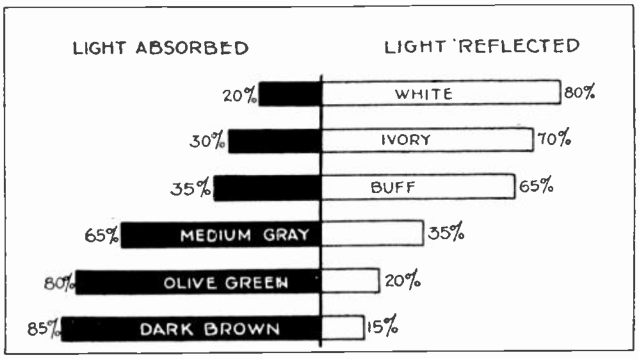

Fig. 186. The above chart shows the percentages of light that will be absorbed and also the percentage that will be reflected, by walls and ceilings painted with different colors.

171. SPACING DISTANCE

In small rooms that are enclosed by permanent partitions and where one lamp is sufficient, it is, of course, a simple matter to locate this unit in the center of the ceiling. In large rooms where a number of lamps are necessary, we need some rule or standard by which to determine the number and spacing of the lights.

The distance between lights or lighting outlets is known as the **Spacing Distance.** This distance will vary somewhat with the shape and height of the room, but it can easily be determined by the following simple rule: **For best efficiency the spac-**

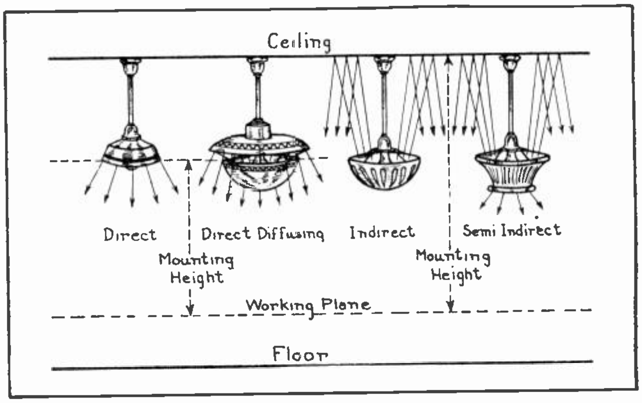

Fig. 187. This sketch shows how the mounting height is obtained with different types of fixtures.

ing distance should be the same as the mounting height.

In some cases this may seem unnecessarily close, but if good illumination is desired, lights should seldom be spaced more than 1½ times the mounting height. There may be certain cases where a building when it is first erected will not need that much general lighting, but if it is later changed to some other use, the standard amount of illumination may become very necessary.

172. LIGHTING BAYS

In large rooms where a number of lights are to be installed they should be lined up as neatly as possible for good appearance. In some buildings the larger rooms have posts or supports at uniform distances throughout them, which sort of divide them into **Bays.** If possible, the lights should be arranged uniformly in these bays.

In planning an illumination layout, however, we should divide the room or space into imaginary bays or squares, as soon as the mounting height and spacing distance have been determined. The width of each bay should be made the same as the spacing distance, and each bay should have a light in the center of it. See Fig. 188.

173. PRACTICAL ILLUMINATION PROBLEM

Let us assume that the size of the room shown in this Figure is 30x40 ft., and 13 ft. high. We will assume that the working plane is 2½ ft. from the floor, and that the lighting units will hang down 2½ ft. from the ceiling. In this case our mounting height will be 13′ — 5′, or 8′. Then, for maximum efficiency, the spacing distance should be about 8 ft., and not over 12 ft., if good lighting is desired. As the building is 30 ft. by 40 ft., a spacing distance of 10 ft. will give us 10-foot light bays, which will fit this space evenly. So we will adopt the 10-foot spacing distance, and bays 10′x10′, as shown by the dotted lines. This layout will require 12 lights.

Spacing the rows of lights 10 ft. apart leaves 5 ft. between the outside rows and the walls; which

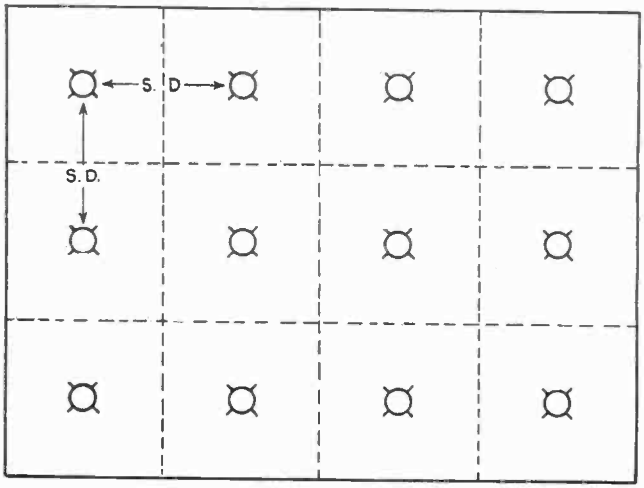

Fig. 188. Dividing the area which is to be illuminated into "light bays," as shown by the dotted lines, greatly simplifies an illumination problem.

Fig. 188-B. This photo shows a view in a well lighted machine shop. It is easy to understand why production can be increased and greater safety obtained in a shop which is lighted in this manner. (Photo Courtesy Light Magazine).

should be all right, unless some special bench work is to be done along the walls.

Now that we know the number of lights to use and that the area of the bays to be supplied by each light is 10x10, or 100 sq. ft., our next step is to choose the desired illumination intensity.

The required intensity in foot candles will vary considerably for various classes of work. For example, a shop doing nothing but coarse assembly work may only require 5 to 8 foot-candles (F.C.), while another shop doing very fine machine work may require 10 to 20 F.C. A store or office may need only 10 to 15 F.C., while a drafting room or sewing room requires 15 to 25 F.C.

Let us assume that our problem is for an office building where the owner desires 15 F.C. intensity.

Now, in order to determine the required lumens to produce this intensity, we recall that we must consider the utilization factor, according to the type of fixture and the color of the room walls and ceiling. We will use for this job a light opal-glass unit of the semi-enclosed type, and assume our walls and ceilings are both light colored.

Looking up this fixture in the table of utilization coefficients in Fig. 184, and in the column for light walls, light ceilings, and a room with a ratio of width to height of about 1½, we find the coefficient is .40.

If we wish to assure the proper lighting intensity after the fixtures are installed a while, we must also consider the depreciation factor of, say 1.4.

Now we are ready to lay out all this data in a simple formula to make our final calculation of required lumens as follows:

$$L = \frac{\text{F.C.} \times \text{B.A.} \times \text{D.F.}}{\text{C.U.}}$$

In which:

L = Lumens required per bay
F.C. = Foot-candles desired intensity
B.A. = Bay area (one bay)
D.F. = Depreciation factor
C.U. = Coefficient of utilization

So, substituting our values, we have:

$$L = \frac{15 \times 100 \times 1.4}{.40}, \text{ or } 5250 + \text{Lumens per bay.}$$

Now, from our table of lumen output of Madza lamps in Fig. 164, we find that a 300-watt lamp gives 5400 lumens, so that would do very well for this job.

It will be well to review this problem until you thoroughly understand each step of it and the reasons for using each of the factors we applied in calculating the spacing distance, size of bays, number of outlets, size of lamps; as these are the important factors in any commercial illumination problem. Once you have obtained an understanding of these fundamentals and a little practice in using them in the simple formula given here, you will be able to lay out a practical illumination job very easily.

174. STANDARD ILLUMINATION INTENSITIES IN FOOT-CANDLES

For your convenience in determining the proper illumination intensity to use for various classes of work and different buildings, a list of the standard foot-candle intensities for the most common classes of lighting is given here:

RECOMMENDED FOOT-CANDLE INTENSITIES

COMMERCIAL INTERIORS

Auditoriums	3 to 5
Automobile showrooms	10 to 15
Banks	6 to 15
Barbershops	10 to 15
Bowling alleys (general)	5 to 8
On pins	15 to 25
Pool and billiards (general)	5 to 8
On tables	15 to 25
OFFICES (private and general)	4 to 15
Close work	10 to 15
No close work	8 to 10
File rooms	4 to 6
Vaults	4 to 6
Reception rooms	4 to 6
RESTAURANTS	5 to 8
SCHOOLS	8 to 25
Auditoriums	5 to 8
Drawing rooms	15 to 25
Laboratories	8 to 12
Manual training rooms	8 to 12
Study rooms and desks	8 to 12
STORES	
General	8 to 15
Automobile	8 to 12
Bakery	8 to 12
Confectionery	8 to 12
Dry goods	8 to 12
Grocery	8 to 12
Hardware	8 to 12
Meat	8 to 12
Clothing	10 to 15
Drugs	10 to 15
Electrical	10 to 15
Jewelry	10 to 15
Shoe	10 to 15
SHOW WINDOWS	
Large cities	
Downtown	100 to 150
Outer districts	50 to 75
Neighborhood stores	30 to 50
Medium-sized cities	
Downtown	50 to 75
Outer districts	30 to 50
Small towns	30 to 50
THEATRES	
Auditoriums	2 to 3
Foyer	5 to 8
Lobbies	8 to 12

CHURCHES	
Auditorium	2 to 3
Sunday-school rooms	5 to 8
Pulpit or rostrum	8 to 12
Art-glass windows	15 to 50

INDUSTRIAL INTERIORS

ASSEMBLING	
Rough	5 to 8
Medium	8 to 12
Fine	12 to 20
Extra fine	25 to 100
MANUFACTURING	
Screw machines	10 to 15
Tool making	12 to 20
Inspecting	25 to 100
Drafting rooooms	15 to 25
ELECTRICAL MANUFACTURING	
Battery rooms	6 to 10
Armature winding	12 to 20
Assembly	8 to 15
FOUNDRIES	5 to 15
MACHINE SHOPS	
Rough work	6 to 10
Grinding and polishing	10 to 15
Fine machine work and grinding	15 to 50
ENGRAVING	25 to 100
JEWELRY MANUFACTURING	25 to 100

This list of recommended illumination intensities will give the proper values for most any kind of ordinary illumination. While it does not, of course, mention every possible class of work, a general study of the intensities required for the various types of work covered will enable you to determine the proper intensities to use on almost any problem you may encounter.

The lower values given in the list are the minimum values for efficiency in the class of work for which they are given. The higher values are recommended as the best practice where maximum efficiency is desired.

When we sum up the recommendations given in the foregoing list, we find that a good general division of proper intensities to keep in mind is as follows:

5 to 10 FOOT-CANDLES

Suitable for coarse work, such as rough assembly and packing. Sufficient for warehouses, stockrooms, aisles, etc. This is enough light to prevent a gloomy appearance.

10 to 15 FOOT-CANDLES

Considered good lighting for most kinds of work on light-colored surfaces, but is not sufficient for fine details on dark-colored surfaces.

15 to 25 FOOT-CANDLES

Excellent lighting. Permits quick and accurate work, and stimulates workmen and speeds up production enough to more than pay for the small extra cost of the light.

50 to 100 FOOT-CANDLES

Needed only for extremely fine and accurate operations, inspection, etc. Generally used only at local spots where needed, and along with general lighting of lower intensities.

Another good general rule to remember is that, for ordinary factory lighting, 200-watt lamps in standard R.L.M. reflectors and spaced 10 ft. apart will usually give very satisfactory lighting. The R.L.M. dome is a common type of unit which is approved by the Reflector and Lamp Manufacturers Association, and is very commonly used in industrial lighting.

If there are certain sections which require more light, larger bulbs can be used in the units at these points, provided the outlets are wired to stand the increased load. For this reason it is usually better to install wires plenty large enough to carry a certain increase of load in case of future improvement in the lighting.

Observing the lighting needs and selecting and recommending the proper illumination intensities for various buildings and classes of work is a very interesting and profitable field, and should prove very easy and enjoyable work for the man with a good understanding of the fundamental principles of illumination covered in this section. Practice using the tables and simple formulas, until you can use them easily in planning any ordinary illumination system. Fig. 188-B shows a splendid example of good illumination in a machine shop.

175. FACTORY LIGHTING PROBLEM

Suppose we have a job of lighting a factory room 55 ft. wide, 100 ft. long, and 17 ft. high. The work to be handled is medium fine, the material is light-colored, and the owner desires very good illumination, which in this case should be obtained with an intensity of about 12 foot-candles.

Let us say the average working plane is about 30 inches, or $2\frac{1}{2}$ feet, from the floor; and that the lighting reflectors chosen will hang down $2\frac{1}{2}$ feet from the ceiling. Then if the room is 17 ft. high, the mounting height will be $17 - 5 = 12$ ft.

We decide to use the maximum efficient spacing distance, which we have learned is $1\frac{1}{2}$ times the mounting height. Then $1\frac{1}{2} \times 12 = 18$ ft. spacing distance.

Each light bay will then be 18′ × 18′ or 324 sq. ft. This figure will be approximate and may need to be corrected to suit the shape of the room, for even rows of lights. Then, to find the number of outlets, we can divide the total floor area by the square feet per bay. The floor area will be $55' \times 100' = 5500$ sq. feet. Then $5500 \div 324 = 16.9+$; or, we will say, 17 outlets.

Now, as our room is nearly twice as long as it is wide, a good uniform arrangement will be the three rows of 6 outlets in each, or 18 outlets. This will be one more than our figures call for, but when balancing up the rows for appearance, it is always better to add a light or two than to remove any. See the layout for this problem in Fig. 189. This arrangement will give a spacing of 18⅓ ft. between the rows of lamps, and 16⅔ ft. between the lamps in the rows. It also leaves a space of 9⅙ ft. between the rows and the walls on the sides, and 8⅓ ft. at the ends.

Now that we have decided upon the number of outlets, our next step is to determine the exact number of sq. ft. per bay. So we will divide the total floor area by the number of outlets, or 5500 ÷ 18 = 305.5+ sq. ft. per bay.

Before we can complete our problem and determine the number of lamp lumens required per bay to maintain 12 foot-candles of illumination, we must consider our utilization and depreciation factors.

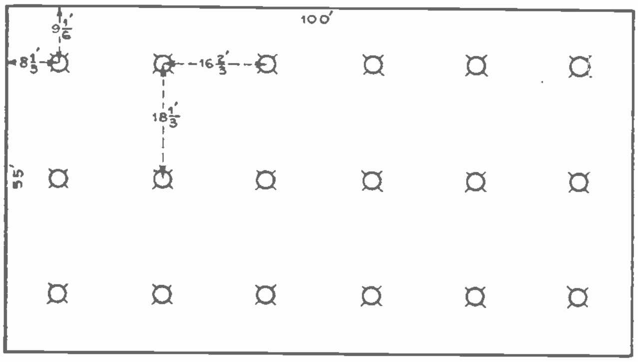

Fig. 189. This sketch shows the arrangement and spacing of lights for a practical factory lighting job.

We will assume that we are going to use steel dome, porcelain-enameled reflectors, and that the walls and ceilings of the room are both light-colored.

By referring to the table in Fig. 184, we find that for this fixture used with light walls and ceilings, and in a room whose ratio of width to height is about 2, the utilization factor is .57. Then, using 1.4 as our average depreciation factor, our problem can be completed by the formula for lumens, which we have previously used.

$$L = \frac{12 \text{ F.C.} \times 305 \text{ B.A.} \times 1.4 \text{ D.F.}}{.57 \text{ C.U.}}$$

In which we will recall—

F.C. = Desired foot-candles
B.A. = Bay area in sq. ft.
D.F. = Depreciation factor
C.U. = Coefficient of utilization

Working out this formula with our figures for this job, we find it gives 8989.4+ lumens required. Then, from the table in Fig. 164, we find that a 500-watt lamp gives 9600 lumens, so it will be plenty large enough for this job.

If the glare from bare bulbs in these units should be objectionable to any of the operators, we can install bowl frosted lamps.

The upper view in Fig. 190 shows what happens when lighting units are spaced too far apart. This produces contrasting spots of bright light with shadows in between, and is very poor practice. The lower view shows the more uniform illumination obtained by proper spacing of the units at distances not to exceed 1½ times their mounting height.

176. OFFICE LIGHTING PROBLEM

In another problem, suppose we have a room 92 ft. square and 13 ft. high which we wish to illuminate to an intensity of 10 foot-candles, with indirect lighting fixtures. Assume the working plane to be 3 ft. from floor.

When using indirect fixtures, we will remember, our source of light is considered to be at the ceiling, so in this case we do not subtract the length of the fixture from the ceiling height to obtain the mounting height. Instead, we subtract just the height of the working plane; so 13 — 3 = 10 ft., which will be the mounting height.

In this case we will use the proper spacing distance for maximum efficiency, which is the same as the mounting height, or 10 ft. Then the first estimate for the bays will be 10′ × 10′ or 100 sq. ft.

The total floor area is 92′ x 92′ = 8464 sq. ft. Then the estimated number of outlets will be 8464 ÷ 100 = 84.6+.

As the room is square, we can use 9 rows of 9 lights each, or a total of 81 outlets; which is close enough, because we are using close spacing anyway.

Now to get the accurate number of sq. ft. per bay, we divide the total floor area by the chosen number of outlets, or 8464 ÷ 81 = approximately 104½ sp. ft. per bay.

We will assume the walls and ceilings to be light-colored, as the ceilings should certainly be to get reasonable efficiency from indirect fixtures, with which the light must be reflected from the ceiling.

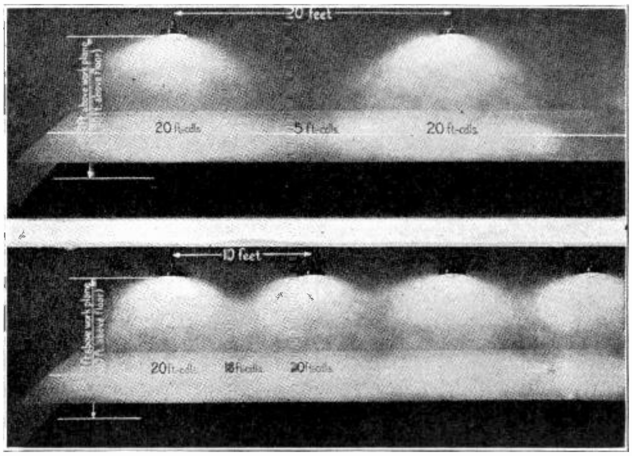

Fig. 190. Note in the upper view the very undesirable effect of uneven illumination, which results from spacing lighting units too far apart. Below is shown the much more efficient lighting obtained with proper spacing distance.

Referring to Fig. 184 again, we find the coefficient of utilization for indirect fixtures and light-ceilings and walls is .42. This is for a room of 5 to 1 ratio of width to ceiling height; as the one in our problem has a ratio of about 7 to 1, or 92 ÷ 13. But the table only gives these ratios up to 5, and we will recall that on ratios above 5 the difference is very little anyway.

With indirect fixtures the depreciation factor is likely to be rather high unless both the fixtures

Fig. 191. This photo shows a view in a well lighted store. Plenty of good light always pays in such places as this. (Photo Courtesy Light Magazine).

and ceiling are kept very clean; so we will use 1.6, or the maximum average depreciation factor.

Then our final problem can be stated in the formula:

$$L = \frac{10 \times 104.5 \times 1.6}{.42}, \text{ or 3981-lamp lumens required.}$$

From the table in Fig. 164, we find that the next size larger than this is a 300-watt lamp, which gives 5400 lumens. This is more than our estimate calls for but it is a good general rule always to select a lamp with the next larger rating in lumens, rather than to use one smaller.

Of course, if we find that for a certain layout the next larger lamp has a considerably greater lumen output than is actually required, we can, if desired, rearrange the layout to slightly increase the spacing distance and size of bays. But, in general, it is a good plan to have a little extra light, to keep it up to standard after the bulbs and fixtures start to depreciate.

Another thought to always keep in mind, is that, while a certain illumination system may be considered excellent today, in a year or two it may be desired to increase the intensity considerably with improving standards.

Fig. 191 shows a well-lighted store in a medium-sized town, using 500-watt lamps on 10-ft. centers.

For store and office lighting, it is general practice to use direct-diffusing, indirect, or semi-indirect fixtures. Both the opal glass bowls and prismatic glass are quite popular.

In office lighting jobs, one should always inquire whether the present layout of desk, equipment, and

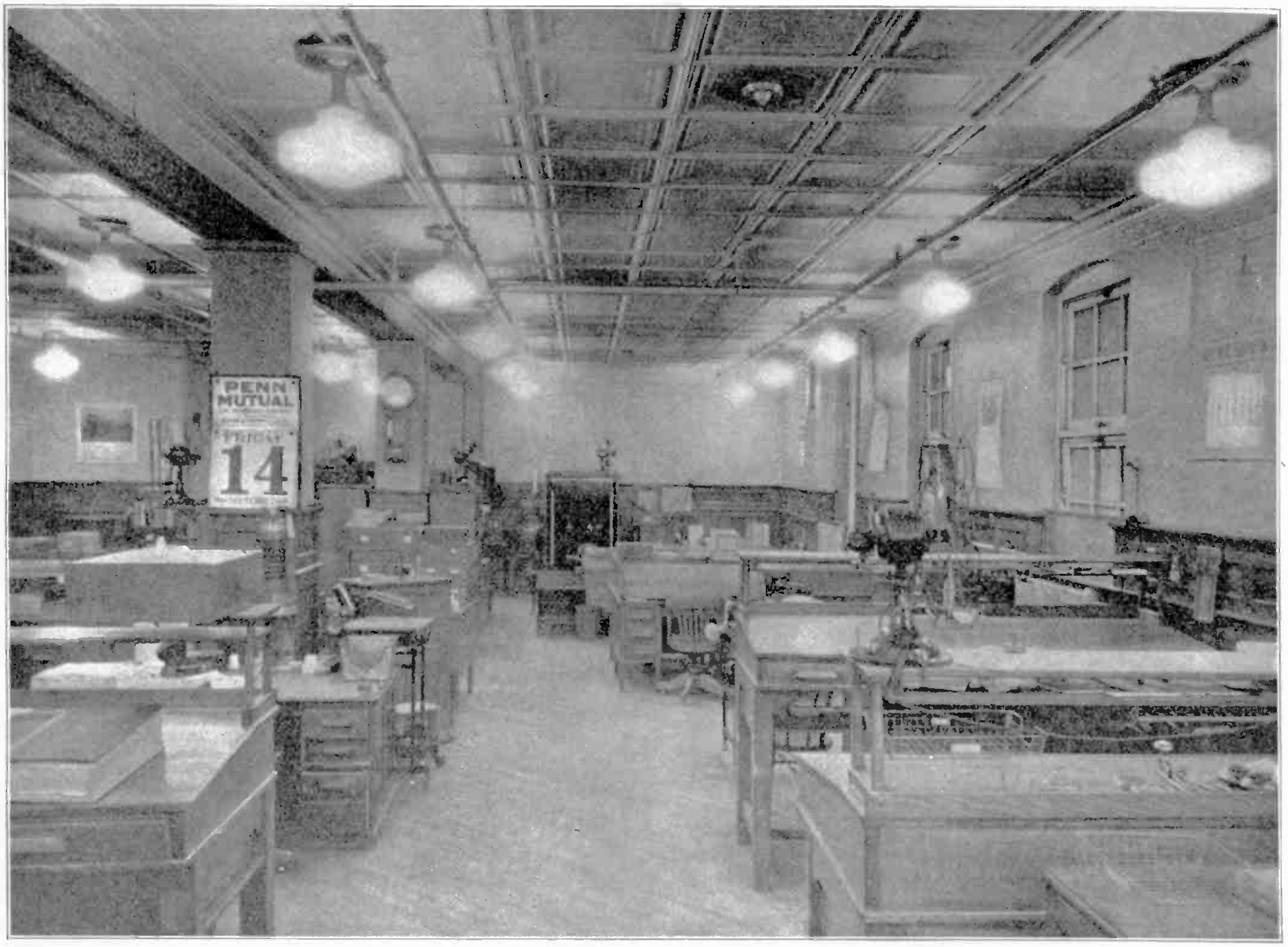

Fig. 192. A well lighted office, such as shown above, permits much faster and more efficient work with less eye strain for employees. It also provides a more cheerful atmosphere which improves the morale of those working in such places. (Photo Courtesy Light Magazine).

small private offices is permanent or not. Many offices change these things around quite frequently, and in such cases good general lighting which is sufficient for almost any work or condition in the office will save a lot of trouble and remodeling of the lighting system.

Fig. 192 shows a very good office lighting system using enclosed glass bowls, which diffuse the light nicely over the desks and equipment.

Fig. 193 is an installation of indirect lighting units, which shows the soft even light distribution obtainable with such fixtures and the absolute freedom from glare or noticeable shadows.

Fig. 193. This office is lighted with indirect units which are ideal for avoiding all glare and shadow effects. (Photo Courtesy Light Magazine).

177. SHOW-WINDOW LIGHTING

Show-window lighting is a branch of store lighting which has proven to be one of the best sales stimulants that the modern store has. On busy streets where large numbers of people pass by, a well lighted show window with goods interestingly displayed will attract a great amount of attention to a store that many people might otherwise pass by.

A number of tests made on stores with various show-window lighting intensities showed the interesting average results listed in Fig. 194.

In show-window lighting the light sources should be concealed, as we must remember it is not the lights the store owner wants to sell but rather the goods the light is to shine on.

Effect of lighting intensities on show window results

Foot candles intensity	Increase in no of people stopping	Estimated hourly profit on sales	Hourly lighting cost	Merchants net hourly gain
15		7.50	3.5 cents.	
40	33%	10.00	7.5 "	2.46
100	73%	13.00	18. "	5.36

Fig. 194. The above table shows the results obtained with different lighting intensities in show-windows. Such tests as this certainly prove that good show-window lighting pays.

The reflectors should be set so their light shines downward and back into the window, in order to put proper light on the side of the objects which faces toward the customer. The light should never be directed toward the window glass or passers by, as it would then have a tendency to cause glare in people's eyes and defeat its entire purpose. Fig. 195 shows how a lighting unit can be concealed in the front top corner of the window, and the manner in which it should distribute its light rays over the depths of the window.

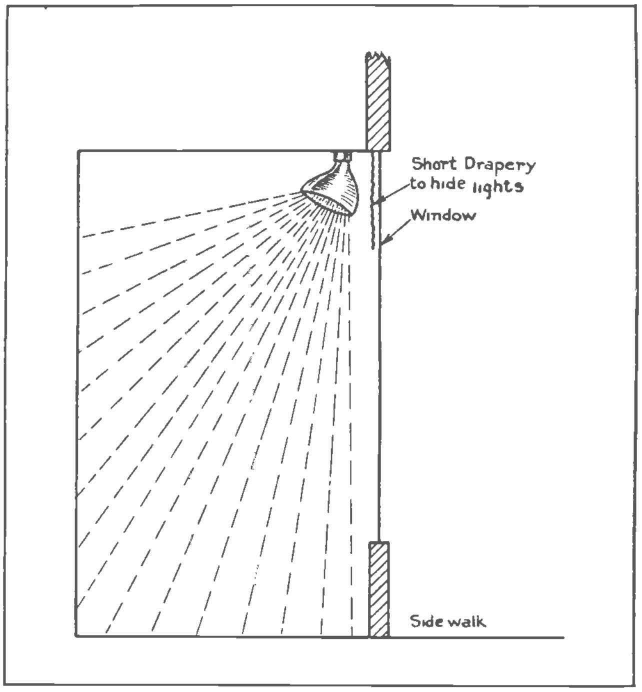

Fig. 195. This illustration shows how the light should be directed on the objects displayed, and not toward the window or observers.

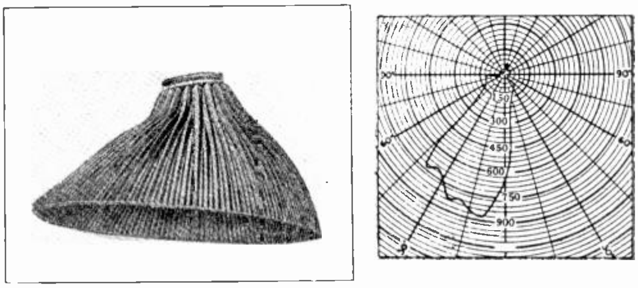

Fig. 196. A common type corrugated glass show-window reflector. Note how the light distribution curve compares with the desired angle of light shown in Fig. 195.

178. SHOW-WINDOW REFLECTORS

Fig. 196 shows a typical show-window reflector of the corrugated glass type, and also its curve of light distribution and the manner in which its shape directs the light to fit show-window needs.

Fig 197 shows two of the corrugated glass show-window reflectors with silvered and painted outer surfaces. The one on the left is shaped to throw the light down and slightly back into a shallow window, while the one on the right is curved to direct the light farther back into deep show-windows.

Fig. 198 shows a group of show-window reflectors mounted behind the concealing curtain, as mentioned before. A row of 150-watt lamps in such reflectors as these, spaced on 12-inch centers, will give excellent show-window lighting. If the same

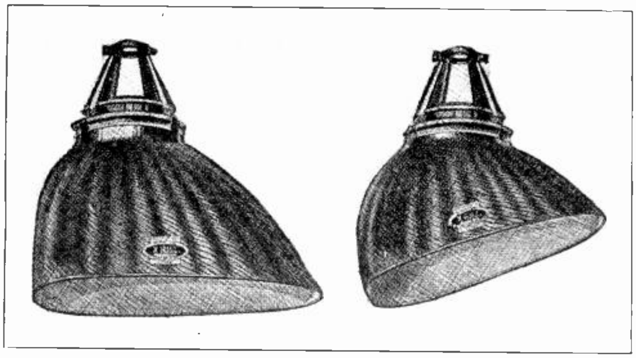

Fig. 197. Mirrored glass show-window reflectors with different shapes, to properly direct the light in windows of different depths.

sized lamps and reflectors are spaced on 18-inch centers, it will give good lighting, and on 24-inch centers fair lighting.

Foot-candle intensities for show windows were given in the list in Article 174.

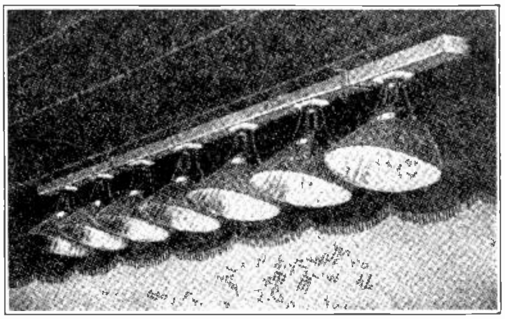

Fig. 198. This photo shows the manner in which show-window reflectors should be mounted and concealed for best results.

179. SPOT AND COLOR FLOOD LIGHTS

Proper use of special show-window flood lights and colored spot lights on certain objects will give very beautiful and attractive effects that in practically every case will pay well for the cost of installing and operating. Fig. 199 shows an adjustable show-window flood light with a detachable color screen which can be fitted over it. A number of different color screens can be obtained at very low cost, to make changes in color effects, and to keep up interest in a window display. Fig. 200 shows a spot light on the left, and on the right is a small reflector used for lighting display cases in store interiors.

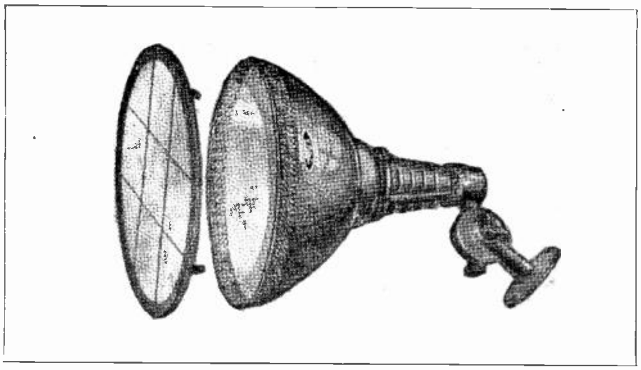

Fig. 199. Adjustable flood lights with colored screens can be used to produce beautiful and decorative effects.

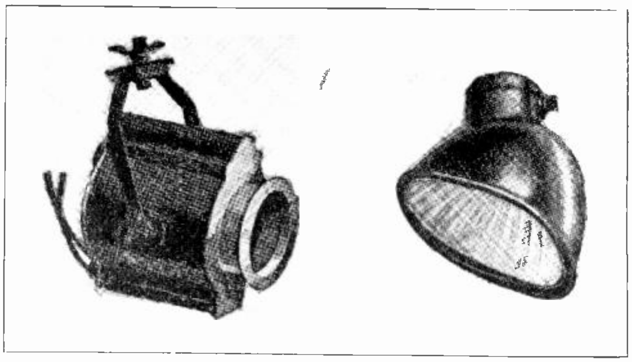

Fig. 200. On the left is shown a spotlight for concentrating bright light on certain objects in show-windows. The small reflector on the right is of the type commonly used in glass counters and display cases.

180. COUNTER LIGHTING

For lighting display cases and interiors of glass counters we can also use compact tubular reflectors with special long slender bulbs made for the purpose. These reflectors fit neatly under the wood or metal corner frames of the counters, so they do not obstruct the view or create a bad appearance in the case. Fig. 201 shows the method of installing this material in a glass show-case. Fig. 202 shows several different lengths of these trough-like reflectors and a number of the fittings used with them. The wires can be run in special small tubing, some of which is also shown.

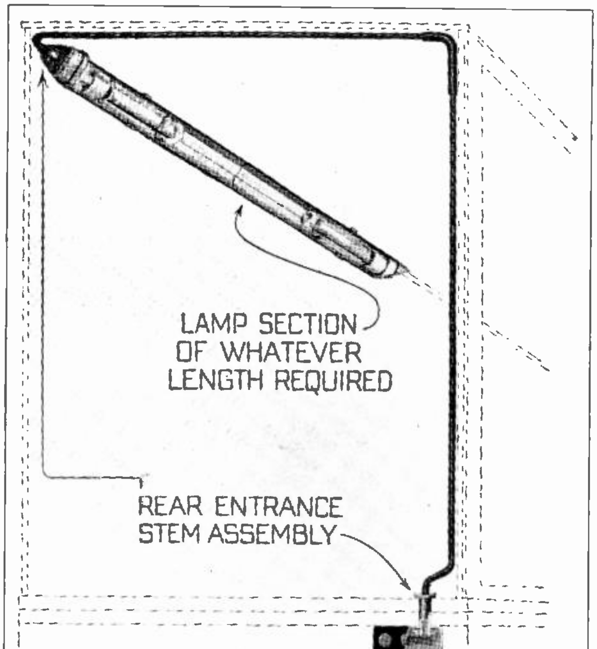

Fig. 201. Long trough-shaped reflectors with special tubular lamps are obtainable for convenient installation in glass counters as shown above.

Fig. 203 shows what remarkable effects can be obtained with properly concealed show-window lights, and properly distributed illumination in the window.

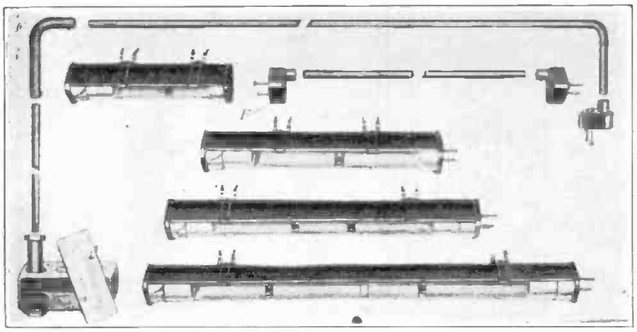

Fig. 202. Show case and counter lighting units are made in convenient sections which can be easily plugged together for lighting cases of different lengths.

181. ELECTRIC SIGNS AND BILLBOARDS

Electric signs today are made in such a great variety of styles and types and to produce such beautiful and life-like effects in some cases, that one might think them very complicated devices. While some of the larger ones are marvelous pieces of mechanical construction and use very ingenious arrangements of electrical circuits, they are really not hard to understand for one who knows the principles of electric circuits and the general principles of sign construction and operation.

182. BILLBOARD LIGHTING

One of the simplest forms of illuminated signs is the billboard type which consists simply of large flat panels on which are painted the pictures and words of the advertisement. Many of the illustrations for such signs are made up on large paper sections and pasted on the boards. This makes it economical to change or renew them as desired.

Billboards of this type are quite commonly equipped with electric lights, because, in many cases, they actually attract the attention of more people when lighted at night than they do during daylight hours.

Fig. 204 shows the common method of mounting the reflectors on conduit extensions out over the top edge of the board. With the reflectors in this position they do not obstruct the view of observers, and they direct their light toward the sign and away

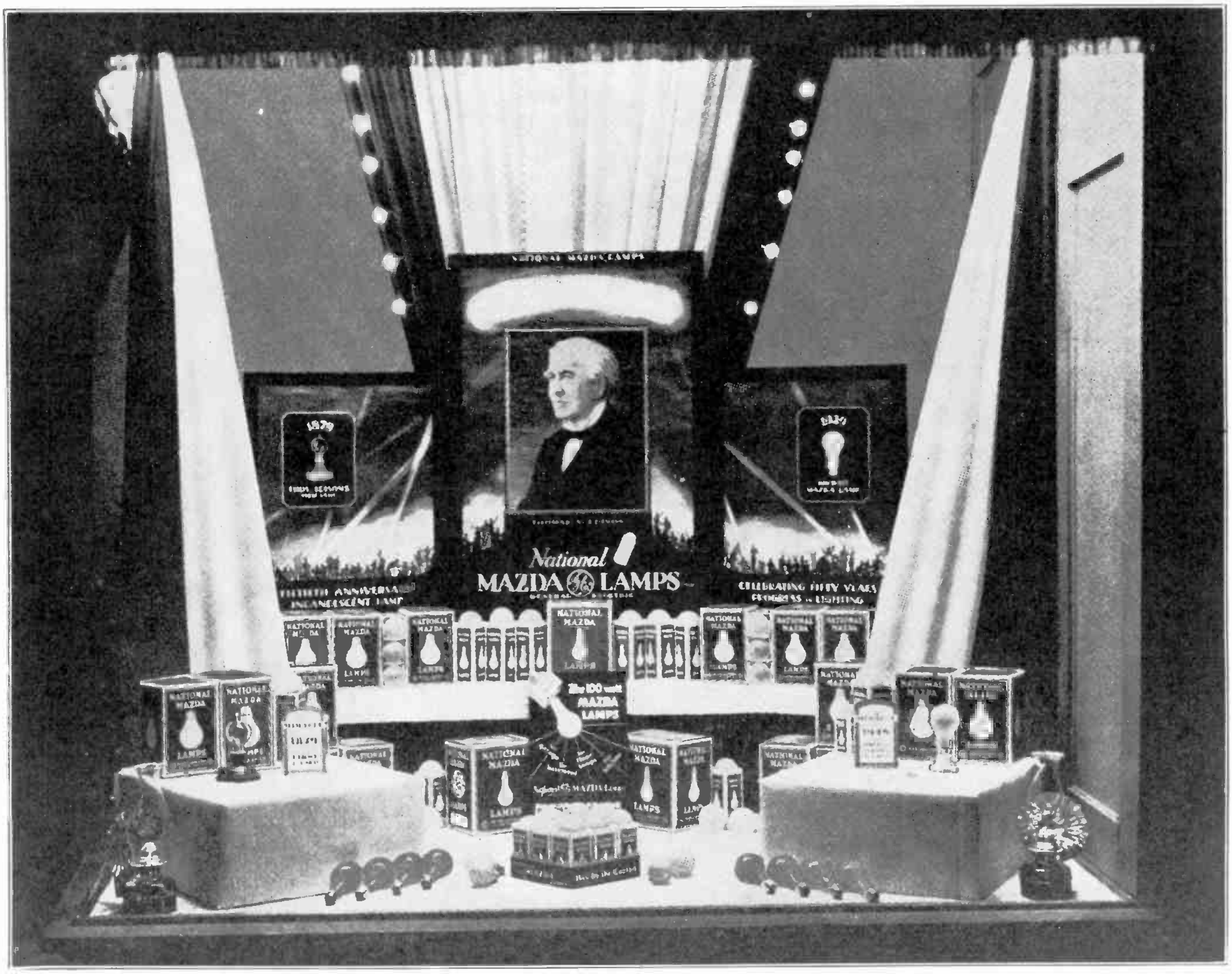

Fig. 203. This exhibit of Mazda lamps in a show-window of an electric store, shows the very beautiful and decorative effects which can be produced by proper show-window lighting. (Photo Courtesy of Light Magazine).

from the observers' eyes, so that the lights themselves are hardly noticeable.

This is ideal, because it is the sign we want people to see and not the lights. This principle is a very good one to keep in mind in illuminating problems, as the best results are often obtained by having the light sources practically concealed, or at least very inconspicuous; leaving the illuminated object to be the principal attraction to the eye.

Billboard lights should be mounted several feet out in front of the boards as shown in Fig. 204, because if they are placed close to the top edge, the light strikes the board at a sharp angle and causes glare and shadows. Mounting them out the proper distance from the board allows their light to diffuse evenly over the board.

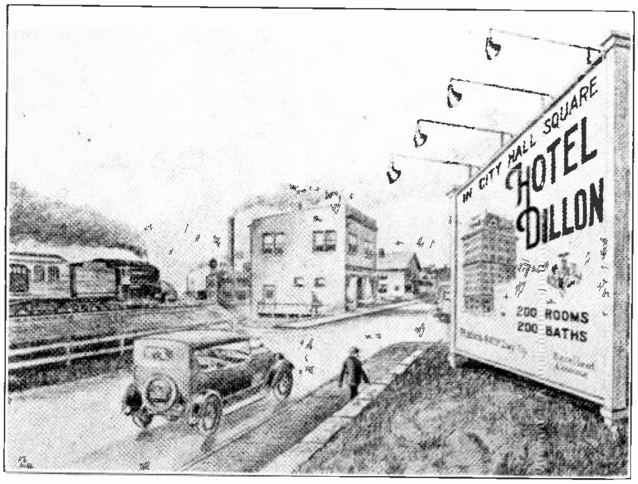

Fig. 204. This view shows the manner of mounting reflectors on conduit extensions for billboard lighting. Note how the reflectors are curved to direct the light on the board, but away from the observers.

In some cases where reflected glare from the lamps above the board comes at just the exact angle to strike the eyes of observers who are slightly below the board, the lights can be arranged out in front of the bottom edge of the board and pointed upward, as shown in Fig. 205-B. This method of mounting can also be used where billboards are viewed from above and we desire to keep the reflectors out of the direct range of vision.

The mounting as shown in Fig. 205-A is to be preferred whenever it is possible to use it, because the position of the reflectors keeps their inside surfaces and the bulbs more free from dirt and rain.

Billboard reflectors mounted on conduit extensions should usually be braced with steel wires running to the top of the board, to prevent the wind from blowing the reflectors sidewise.

183. ELECTRIC SIGNS, CONSTRUCTION AND OPERATION

Many electric signs are made of steel framework covered over with sheet metal. These can be made in square, round, high narrow, or long horizontal shapes; as well as ornamental designs. Some signs of this type merely have letter shapes cut in the sheet metal on both sides and covered with opal or colored glass. Light bulbs inside them cause the glass letters to show up brightly at night.

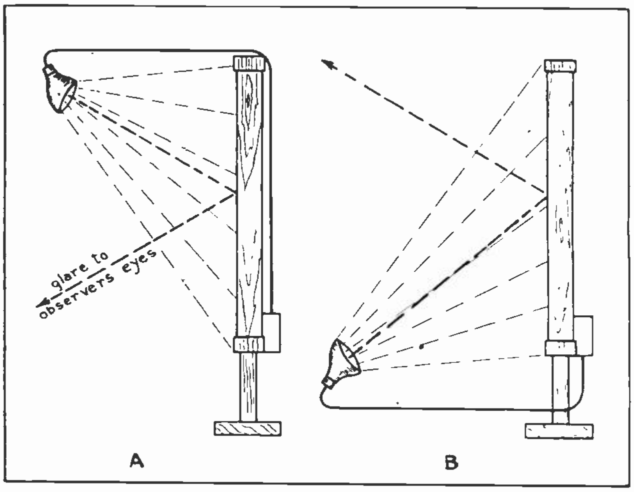

Fig. 205. If objectionable glare is produced by mounting the units above the board as in "A," they can be reversed and mounted below as shown at "B."

Other signs have lamp receptacles screwed into small round holes in the sheet metal, and bulbs screwed in these receptacles and projecting out from the face of the sign. These bulbs can be obtained in various colors, and arranged in rows to form letters or patterns of almost any desired shape.

Beautiful action effects can then be obtained by connecting the bulbs to motor-driven flashers. By causing groups in sign borders to light up and go out progressively or in numerical order, they can be made to appear as though they are actually moving, thus giving the "chaser" and "fountain" border effects, and other action displays so commonly used on large signs.

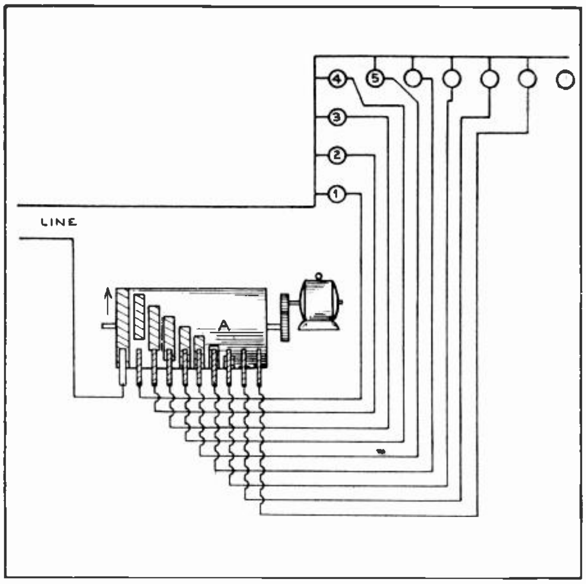

Fig. 206. This diagram shows connections for a sign flasher to be used to light the lamps 1, 2, 3, 4, etc., in rotation.

184. FLASHER CIRCUITS

Fig. 206 shows how a flasher can be connected to light lamps in order in a row, and then extinguish them in the same order. A motor-driven drum has a number of circular metal segments attached to it, and arranged with their ends staggered, or one behind the other in a slanting row. A number of spring-brass or copper brush contacts slide on these segments as the drum is rotated. The metal strip on the left end of the drum may be continuous, or nearly so, in the form of a ring around the drum. This ring is connected by a "jumper" to all other segments, so with one line wire connected to the left brush contact, all segments are kept alive or in contact with the lower live wire throughout the rotation of the drum.

If the drum rotates in the direction shown by the arrow, the segments will strike the stationary contacts in order, from left to right, closing the circuits to the lamps in order—1, 2, 3, 4, 5, etc. All lamps are connected by a common wire back to the top line wire.

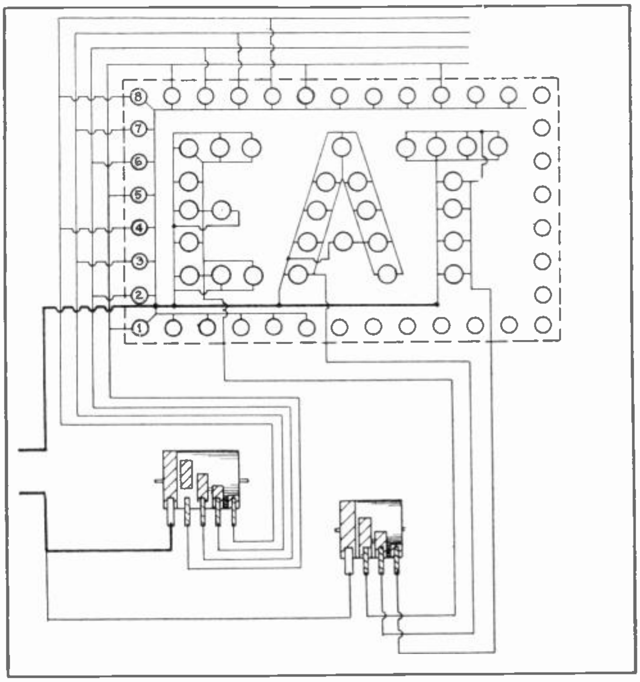

Fig. 206-A. Wiring diagram for two flashers used to obtain combination effects on an electric sign. The flasher at the left controls the border lamps only, while the one on the right controls the letters of the sign.

Flashers of this type can be obtained with many dozens of contacts, to be used to gradually spell out whole words composed of lamps on the sign.

Several flashers of this type with different numbers of contacts and operated at different speeds may be used together on one large sign to get the various combination effects desired. Fig. 206-A shows how two flashers are used, one to provide a "chaser" border effect, and the other to flash the letters of the word "Eat" on in rotation, and then all off.

You will note that to produce the motion effect in the border, it is not necessary to use a flasher with as many contacts as there are lamps. Instead, these lamps are connected in parallel groups, so that every fourth one is connected to the same flasher contact. This makes the lamps come on in the order 1, 2, 3, 4, and also 5, 6, 7, 8, coming on at the same time; or lamps 1 and 5 together, 2 and 6 together, etc. The segments on the drum are usually of the proper length so that one lamp of the four is out all the time, and as the drum rotates, the dark lamp is first No. 1, then 2, 3, 4, and repeat. This matches up with the next group, as all groups are operated from the same flasher; so it produces an appearance of continuous motion around the sign border.

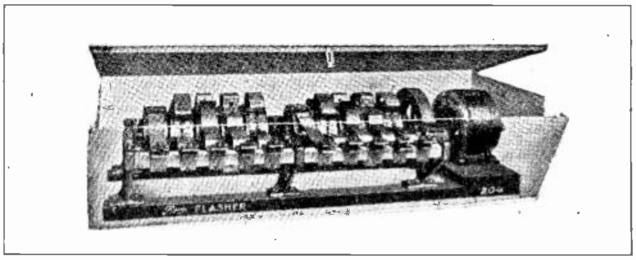

Fig. 207. Motor-driven sign flasher mounted in weather-proof box. Flashers of this type are made with different numbers of drum units and contacts, to produce a great variety of effects.

A large sign may have several thousand lamps on it, connected in groups to several branch circuits or return wires, and one wire from each lamp connected to its proper flasher wire.

You can see, however, from Fig. 206-A, that the manner of grouping the connections simplifies them, and makes it only an easy matter of circuit testing to connect each wire to its proper flasher brush.

Fig. 207 shows a photo of a sign flasher such as commonly used with signs of the type just described. Note that this flasher has two separate sections, and rotating segments made of strips of brass or copper bent to shape and attached to the shaft-like separate wheels. Fig. 208 shows a large sign which uses this type of flasher.

Fig. 208. Large signs of the above type often use several flashers, and a combination of lamps and Neon tubes to produce very beautiful effects.

Sign lamps are often mounted in sheet metal channels or troughs which have the inner sides and back painted white. This gives a more sharply defined shape to letters and figures, as it prevents the light from spreading so much. Very striking effects can also be produced by using lamps under black inverted trough-shaped letters, mounted so they stand out slightly from a white background as shown in Fig. 209.

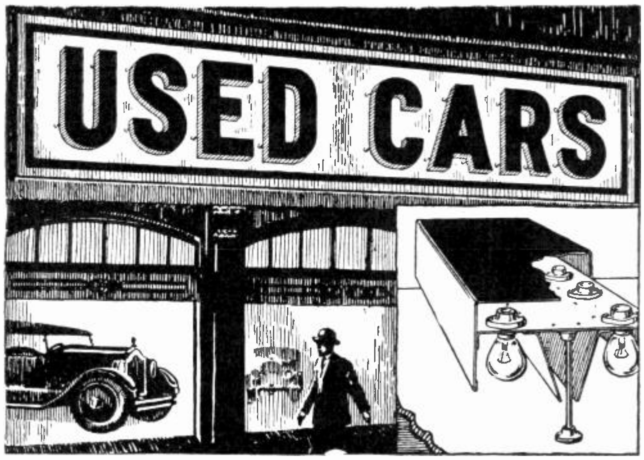

Fig 209. Very attractive signs can be made with inverted trough units, to produce outstanding black letters on white background as shown above.

Many large flasher signs also have lighted billboard areas combined with the motion effects. Some of the largest flasher signs which have special "moving letters", or continuous reading effects, use a paper roll with holes punched in it, similarly to a player piano roll. This paper is in the form of an endless belt, and is drawn slowly along between a large metal plate and a "bank" of small contact "fingers". The holes in the paper are arranged in the form of letters or shapes which are to travel across the sign. The sign face has a bank of lamps arranged in rows both ways, the same as the contacts are; so as groups of contacts drop through the holes in the moving paper and strike the metal plate completing their circuits, corresponding lamps light up on the sign.

Fig. 210 shows the arrangement of the contacts and lamps, and the method of connecting them. The wires are grouped or cabled together but can be easily traced from the contacts to the lamps and you can see that any contact that is allowed to touch the metal plate will close a circuit to a corresponding lamp.

The sketch in this figure shows only a comparatively few lamps, but on a sign of this type they are so numerous and close together that almost any letter or figure can be made to light up by having the groups of holes punched in the paper in the desired shape. Then as the paper moves and the holes slide from one set of contacts to another, the lighted letter on the sign shifts from one set of lamps to the next and moves across the sign.

Fig. 211 shows a splendid example of the advertising value and beautiful effects of combined electric sign and decorative lights on the front of a theatre building.

185. NEON TUBE SIGNS

Neon gas signs are very attractive and the peculiar reddish color is one that draws the eye and penetrates foggy or smoky atmospheres very effectively.

These signs are made of long glass tubes which are bent into the shapes of letters or figures desired, and then filled with neon gas. They are then sealed air and gas tight and mounted on a background or frame, or in some cases in sheet metal channels or trough letters.

Neon is a rare gas which is extracted from the air where it exists in very small quantities. When high voltage electricity is passed through it, it glows with the peculiar reddish hue already mentioned. Neon tubes are operated at voltages ranging from 1000 to 20,000, according to the size and length of the tubes.

These high voltages are usually obtained by use of small step-up transformers right at the sign, and the high voltage wires must be very carefully insulated along the sign framework.

Some of the smaller signs of this type are operated with ordinary spark coils, but their light is not as steady as that of signs operated with transformers.

One of the particular advantages of neon signs is that the tubing can be heated and bent to form letters written out in complete words, and also the most intricate curves and designs for decorative figures.

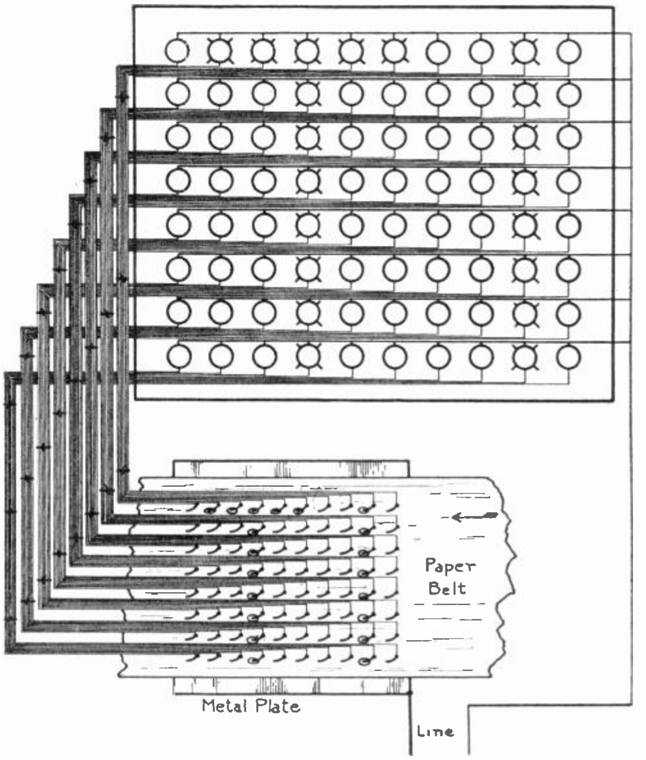

Fig. 210. The above diagram illustrates the principle of signs with traveling reading matter. Note how each contact on the paper belt is wired to a lamp in a corresponding position on the sign above.

In addition to neon gas, some signs use tubes with mercury vapor, which give a beautiful blue color when high voltage is applied to them. Green color is obtained with mercury vapor in amber colored glass tubes. By using helium gas and amber colored glass, gold, pink and other colors can be obtained.

Various letters and sections of tube signs can be operated with flashers, and some large signs use a combination of neon and mercury vapor tubes with various colored bulbs, to create some very beautiful and striking effects.

The glass tubes of neon signs must be very carefully handled, as they are easily broken; and the least crack in a tube will allow the gas to leak out.

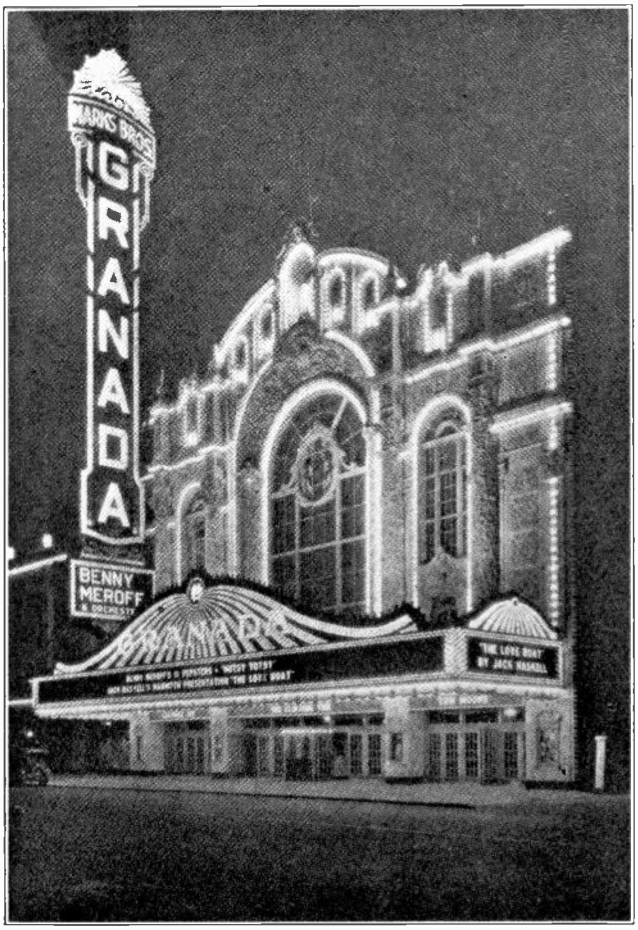

Fig. 211. This photo of the front of a large theatre shows what beautiful effects can be obtained by the use of flasher signs and lights on the building itself.

186. SIGN WIRING, AND CONSTRUCTING SMALL SIGNS

Electric signs are one of the most profitable forms of advertising illumination, and in many localities offer a very good field for the trained man to install or service them.

Sign manufacturers will make almost any type or design of metal sign to the specifications of the customer or electrician. You can also build the smaller ones very easily in your own shop if you desire.

The frame should be of angle iron, and covered with substantial sheet metal to form a box of the desired shape and size. The letters and figures can be painted on, after the sign has had a coat of weather-resisting paint.

A color combination that serves well both for day and night visibility is a dark blue background with white letters. If the sign is to be lighted with bulbs, cut 1½" round holes in rows along the letter shapes. Two-piece threaded sign receptacles can be screwed tightly into these openings. Then wire up the receptacles, either in parallel or with one common wire and separate wires to a flasher if desired. All connections, including the binding screws on receptacles, should be soldered to prevent corrosion.

Then the connections, backs of receptacles, and all exposed metal edges should be covered with a good coat of weather-proof paint or sealing compound. If the sign is large its circuits should be divided so that none carries over 15 amperes, and each circuit should be fused separately.

In small towns one can often have the local tinsmith or metal shop build the sign bodies, and a sign painter decorate them. In this case the electrician can wire and hang them, and share the profits.

In hanging any signs over sidewalks, they should be fastened very securely so there will be no chance of their ever falling and injuring anyone. They should be bolted to a substantial part of the building and braced with chains from above and both sides.

The local authorities should also be consulted on their rulings before any signs are hung over public walk-ways.

187. FLOOD LIGHTING

Flood lighting of building exteriors is another interesting branch of advertising illumination. It is a particularly attractive form of display on buildings having light-colored walls and good appearing architecture.

Flood lights on buildings are usually concealed on a ledge or balcony of the building so their rays are directed upward and at the proper angle against the sides of the structure.

They should never be placed in a position where they can shine into the eyes of passers-by.

Fig. 212 shows several styles and sizes of flood light **Projectors.** Note their weather-proof housings and adjustment feature, to allow them to be "aimed" or focused on the area desired.

Fig. 213 shows the shape of the concentrated beams thrown by shallow-type reflectors and also those from deeper reflectors which spread the beams over a greater area.

In many cases where it is not convenient or possible to locate flood light projectors on the same building they are to light, they are located on some other building nearby, and perhaps across a street.

For best efficiency, the beams must be able to come from a short distance out from the vertical walls, rather than be directed too nearly parallel with the walls they are to light. Certain effects, however, can be produced by units quite close to the walls or columns to be lighted.

Fig. 214 shows a row of powerful flood lights on the parapet of a skyscraper, and used to light the narrower portion of the building which projects on up from this level.

Beautiful effects can be obtained by properly using mixed colors on buildings of striking architecture, and also by use of "dimmer rheostats" auto-

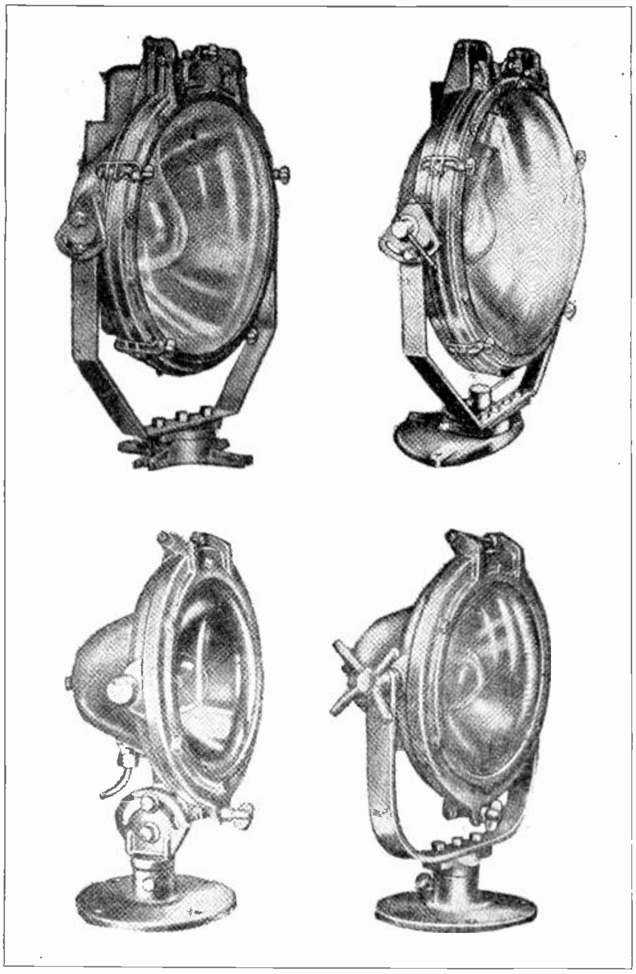

Fig. 212. Several types of flood light projectors. Note the weather-proof construction and adjustment features of these units.

matically operated by small motors in connection with automatic tilting mechanisms, to cause changing and moving colors to play over the building.

The deeper-colored lights such as red and blue are, of course, not as efficient as the white or amber ones, because the color lenses absorb some of the light. The effects obtained with colors, however, are well worth their cost.

Fig. 215 shows the effect of flood lighting on the top of a large office building.

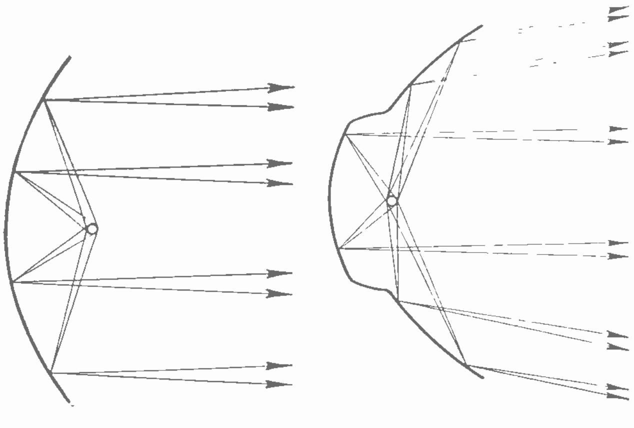

Fig. 213. This diagram shows how reflectors with shallow or deeper curves can be made to concentrate or spread the beams of light as desired.

Flood lights are also very extensively used for lighting railway yards, race tracks, bathing beaches, and places where construction work is being done at night. In public parks flood lights are often used to illuminate fountains and monuments, with very beautiful results. Fig. 216 shows an illuminated fountain which uses water-proof projectors mounted right in the water. In the background is a beautiful example of flood lighting on a tower.

Fig. 214. This photo shows a row of flood light projectors in use on the top of a skyscraper office building. (Photo Courtesy Light Magazine).

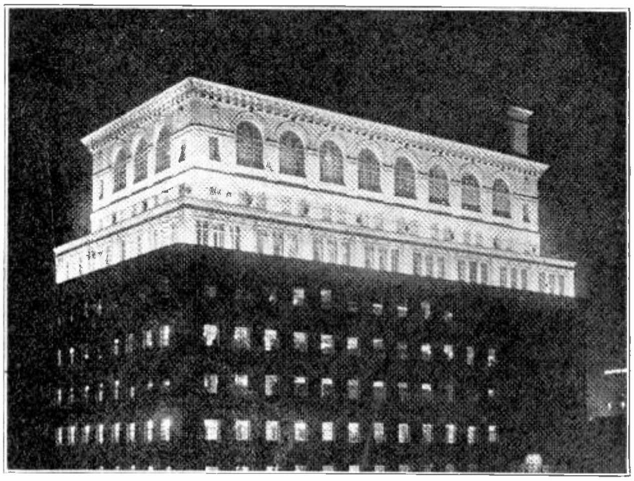

Fig. 215. This building is a very good example of the beautiful effects obtainable with modern flood lighting. (Photo Courtesy Light Magazine).

188. STREET LIGHTING

Street lighting is becoming so common that many of us fail to notice or appreciate it any more. But when we think of the benefits derived, in the reduction of accidents and increased business on well lighted streets, and that in many of the larger cities great lamps of 1000 to 3000 watts each light the streets nearly as bright at night as in the daytime, we find it is really a wonderful branch of electric illumination. The installation and maintenance of street lighting systems furnish profitable employment to great numbers of trained electrical men, and in the small and medium-sized towns often provide a worthwhile contract for some alert graduate

Fig. 216. The fountain in the foreground is illuminated by flood lights placed within its bowl, and in weather-proof projectors. In the background is shown a well flood-lighted tower.

who can convince the officials of his home town that better street lighting pays.

Arc lamps, which were formerly extensively used, are being rapidly replaced by Mazda lamps, because of their greater simplicity and reliability.

Where arc lamps are still in use, it is a simple matter for the trained man to make any necessary adjustments on their coils and mechanisms which feed the carbons as they burn away, or to locate any trouble on the system.

Incandescent lamps of from 200 to 2500 watts or more are commonly used for new street lighting installations.

189. SUSPENSION TYPE UNITS

For overhead lighting systems in small and medium-sized towns, clear lamps of 200 to 500 watts or larger are often placed in simple reflectors of the type shown in the lower left view in Fig. 217. These units are then suspended from overhanging arms on poles, or hung from steel wires stretched across the street between poles or buildings. Reflectors of this type are low in cost, and when mounted at the proper height, provide quite effective lighting. These bare lamps, however, are the cause of a certain amount of undesirable glare and shadows.

Directly above the reflector in Fig. 217 is shown a swivel cross-arm used for hanging such reflectors. The porcelain insulators on the ends of the arm are for the purpose of attaching the wires of the lamp circuit.

On the right in Fig. 217 is shown a street lighting unit of the medium-priced, enclosed type which is also for overhead suspension. These units soften and diffuse the light and produce more even illumination, with less glare and shadows.

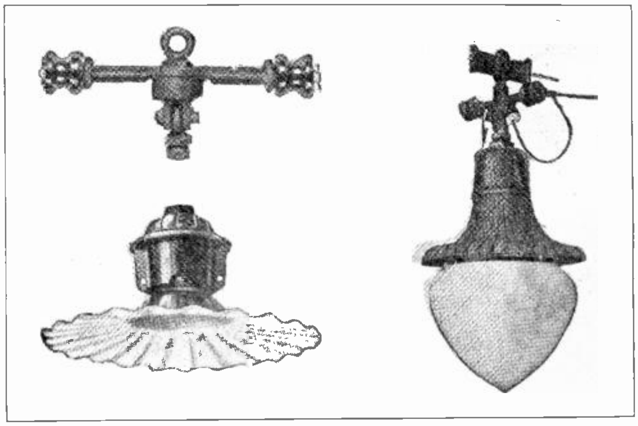

Fig. 217. Above are shown two types of street lighting units and also a swivel cross arm or hanger used in their mounting.

Fig. 218 shows two types of "cutout" or "disconnect" pulleys for use with overhead street lights. These pulleys allow the lamp to be lowered for cleaning, inspection, and repairs. When the lamp is lowered by releasing its supporting chain or rope, it is disconnected from the line by the prongs of the cutout pulley dropping out of their sockets. This makes the lamp safe to work on, and when it is pulled back in place, a guiding device causes the connecting prongs to slip back in their clips as the lamp is drawn up tight.

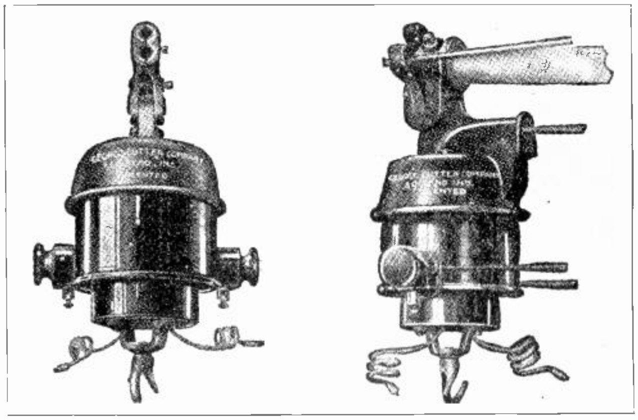

Fig. 218. Cut-out pulleys used for disconnecting and lowering street lights for cleaning and inspection.

190. POST TYPE UNITS AND STREET LIGHT CIRCUITS.

Where more elaborate street lighting is desired, enclosed glass units on top of posts at the side of the streets are commonly used. Fig. 219 shows several styles of these units both for single and double lamps.

Street lights are commonly connected in series on high-voltage circuits, to cut down the cost of copper wires, as the distances between them are considerable. You will remember that when devices are connected in series the current is the same in all parts of the circuit, and that which flows through one device flows through all the others as well. These circuits are often operated on 2300 volts and higher, so the wires must be well insulated, and considerable care should be used in working around such circuits. We can now see the advantage of using cut-out pulleys when working on these lamps.

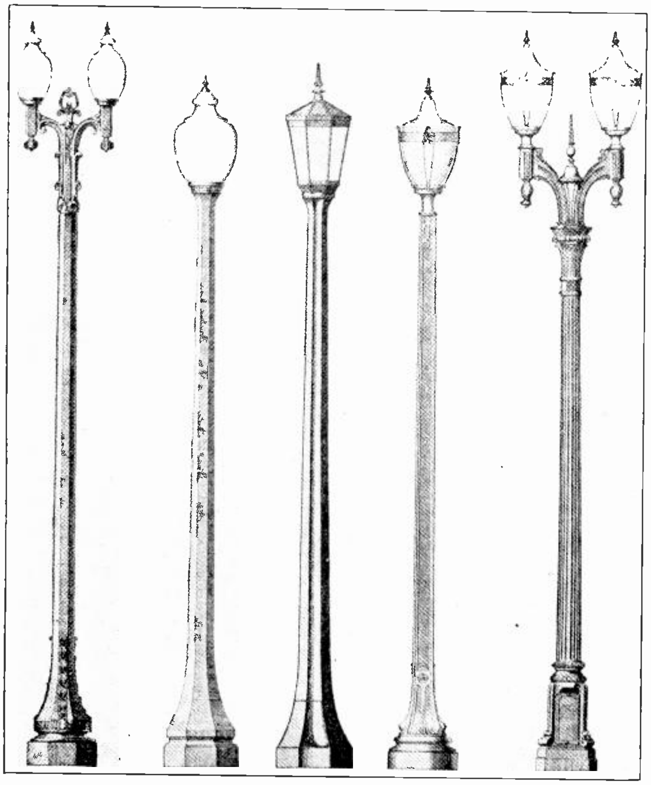

Fig. 219. Hollow concrete or metal posts with large globes, as shown above, are used in many of the better appearing street lighting installations.

191. SERIES LAMP "CUTOUTS"

On the older series street-lighting circuits, if one lamp burned out, all lamps on that circuit went out, because they were all in series. Nowadays there are in use special sockets which have short-circuiting springs that cut out the lamp if it opens the circuit. Fig. 220 shows a sectional view of a socket of this type from which the operation of prongs can be easily understood. A thin film or strip of insulating material is placed between the tips of these spring contacts and remains there as long as the lamp is in good condition.

If we have, for example, a circuit of 100 lamps in series and 2300 volts is applied to this circuit, the voltage drop across each lamp when operating will be about 23 volts. This voltage drop we know is proportional to the current flow and to the lamp resistance. This low voltage will send current through the lamp, but will not puncture the insulating film in parallel with the lamp. However, if a lamp burns out and opens the circuit, all current momentarily stops flowing. With no current flowing there is no voltage drop at any of the lamps, and the full 2300 volts will be applied for an instant across the springs of the lamp which has opened the circuit. This voltage is high enough to puncture the insulating film and burn it out, thus shorting the defective lamp out of the circuit, and allowing the others to operate once more.

Special transformers at the sub-station compensate for the reduced resistance and voltage drop due to the loss of the one lamp. These will be explained later in the section on transformers.

Instead of applying the high voltage of the line circuit directly to the lamps and sockets, many modern series street lighting systems use small transformers at each lamp to reduce the voltage for its filament. All of these transformer primaries are connected in series, as in Fig. 221. This increases the safety and reduces lamp socket insulation costs. It also permits the use of lamps with filaments of larger diameter and lower resistance. They are, therefore, stronger and more rugged and also of higher efficiency.

The current through these low-voltage lamps may be from 6 amperes to 20 amperes, or more on the different sizes; and they are made for voltages from 6.6 to 60.

Wiring for street lights can be run on the poles where suspension type units are used, and underground for better appearance with post type units. Underground wiring can consist of lead covered cable buried in a trench and run up through the hollow poles to the lamps, or of rubber covered wires or lead covered wires in underground ducts of tile or fibre conduit.

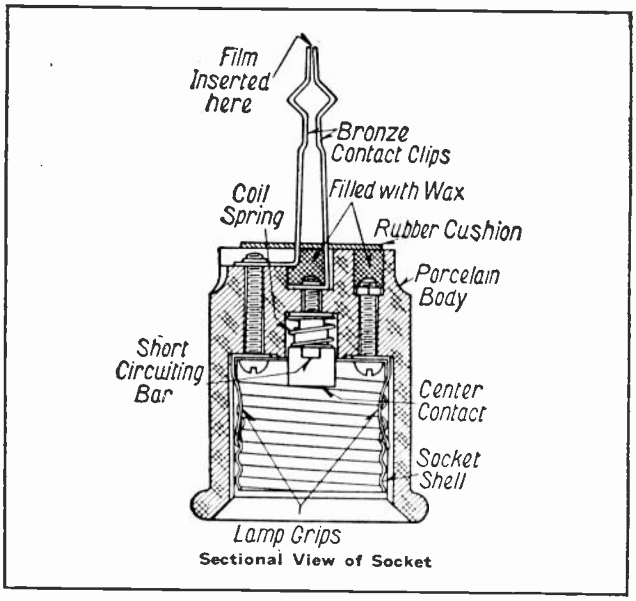

Fig. 220. This sketch shows a sectional view of a socket and "film cut-out" used with series street lamps. Note how these cut-out springs on contact clips short circuit the shell and center terminals of the lamp socket. The insulating film is not shown between the contact clips in this illustration.

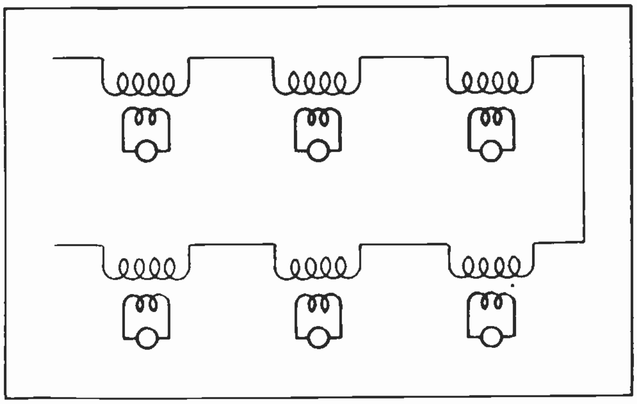

Fig. 221. This diagram shows the manner of connecting series street lighting transformers which are used to reduce the voltage at each light.

192. MOTION PICTURE LIGHTING

Electric light is used on a tremendous scale in the motion picture industry, both in the photography and in the operation of projector machines in theatres; and the lighting of the theatres themselves.

In the taking of motion pictures there are used some of the highest foot-candle intensities that are encountered in any branch of illumination. While it was formerly thought that such pictures had to be taken in sunlight, powerful electric lights now reproduce effects of sunlight or moonlight in almost any required intensity.

Arc lamps were formerly used very extensively and still are to some extent, as the color of their light rays is particularly good for exposing the older types of film. However, there has been developed a new type of film that is sensitive to the yellow and white rays of incandescent lamps, and, therefore, these lamps because of their quieter and cleaner operation are rapidly replacing many of the arc units. Mazda lamps require much less attention and adjustment than arc lights, and provide a steadier light. Their quieter operation is a great advantage in their favor for the filming of talking pictures.

The constantly changing lighting requirements on various movie "sets" and the care and maintenance of the lighting units provide a great field of fascinating work for trained electrical men who know practical illumination.

Single lamps of 10,000 watts each and larger are commonly used in motion picture photography, and "banks", or portable units, consisting of 4 to 12 or more lamps are used.

An interesting problem, and one which will help you to realize the size of this equipment, will be to calculate the current that will be required by two banks of six 10,000 watt lights each, and two single 20,000 watt lights if they are operated on a 110-220 volt, three-wire circuit. Also determine the size of cable necessary to carry this current to the lights in a temporary location 150 feet from their generator, with not over 5 volts drop.

AVIATION LIGHTING

The aviation industry is fast becoming one of the greatest users of modern and efficient electric illumination.

A great deal of night flying as well as daylight flying must be done to maintain fast air-mail and passenger schedules, and the safety of night flying depends on electric illumination in many ways.

Aviation lighting can be divided into the following classes:

- Airport lighting
- Route beacons
- Lights on planes

Many millions of dollars have already been spent in airport lighting, and it is undoubtedly safe to say that within a very few years every town of any size in this country will have a lighted airport.

193. AIRPORT LIGHTING EQUIPMENT

A well-lighted airport requires the following equipment:

- Landing field beacon light
- Landing field flood lights
- Boundary lights
- Obstruction lights
- Approach lights
- Illuminated wind-direction indicator
- "Ceiling" projector
- Hangar lights
- Shop lights.

Many of these lights are rated by government standards, and the airports are given ratings by the government according to the type and completeness of lighting equipment used.

194. AIRPORT BEACONS

The purpose of the airport beacon is to direct pilots to the airport. These beacons are rotating or flashing searchlights of 15.000 to 100,000 candlepower, and are usually mounted on a tower or on the top of one of the hangers, so their beams will be unobstructed in all directions. If a flashing light is used, the flashes should not be less than 1/10 of a second in duration, and should be frequent enough to make the light show 10 per cent of the time. Beacon lights for airports or route beacons usually have two bulbs mounted on a hinged socket base, so if one bulb burns out the other is immediately swung into place by a magnet. This is necessary to make these units dependable at all times.

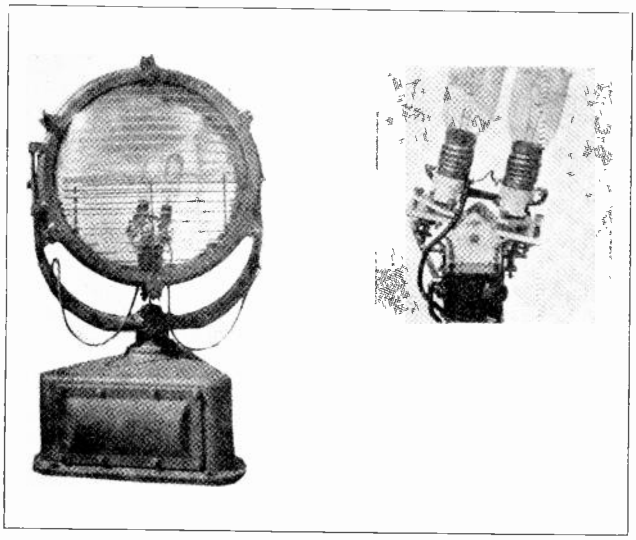

Fig. 222. On the left is shown a typical rotating beacon, such as used at airports and along air routes. On the right is a view of the double lamp mechanism, which swings a new lamp in place if the one in use burns out.

Fig. 222 shows on the left a beacon light unit mounted on the case which contains the revolving motor and mechanism. On the right is shown the double lamp unit which can also be seen inside the light at the left. This light has a 24 inch diameter, and uses a 1000 watt. 115 volt bulb, and develops 2,000,000 beam candlepower. Such a light can be seen by the pilot from a distance of 10 to 35 miles in fair weather, and is a great help in guiding him to the airport.

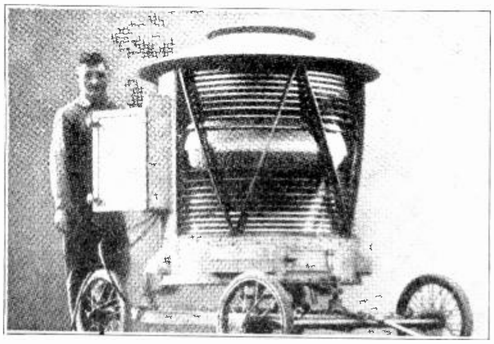

Fig. 223. This large landing field light has a lens similar to those used in lighthouses, and is mounted on a light truck for portable use at airports.

195. LANDING FIELD FLOOD LIGHTS

Landing field flood lights are used to illuminate the surface of the landing field, in order to enable pilots to land their planes safely. In landing a plane it is very important for the pilot to be able to see the ground and judge his distance from it, also to see the length of the field or runways on which he has to bring the plane to a stop.

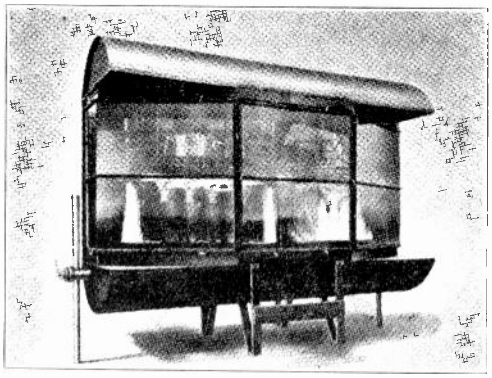

Fig. 224. A landing field lighting unit which has a number of powerful lamps mounted behind the glass front, in a manner to spread their light over a wide area.

Flood lights should also illuminate the field well enough to show up any uneven surfaces. Some fields are lighted by several different flood lights located on opposite sides of the field, while others use a bank or group of lights located near the hangars. Sometimes a large portable light is used, so it can be moved about by hand on a light weight wheeled truck. Fig. 223 shows a unit of this last mentioned type.

Fig. 224 shows a large unit in which a number of lamps are mounted, and you will note that its shape allows the beams from the several lamps to spread over a wide angle in order to cover the entire field from this one light source.

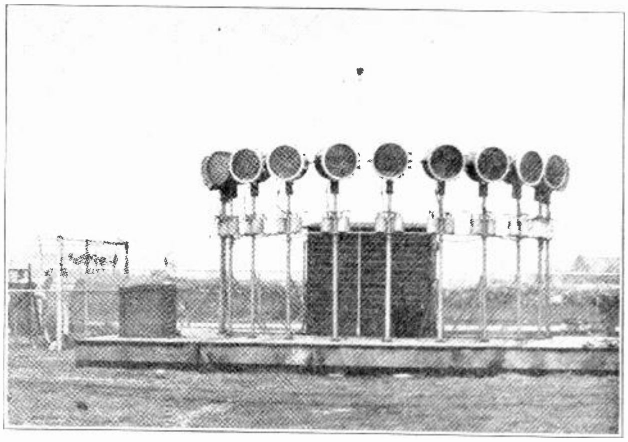

Fig. 225. A number of smaller projectors, arranged as shown, provide very effective distribution of light over the field.

Fig. 225 shows a number of smaller flood lights arranged to throw their separate beams over the field in a wide spread fan shape. Whatever type of flood lights are used, they should light the field uniformly and without harsh shadows, and their color should be such that they do not distort normal

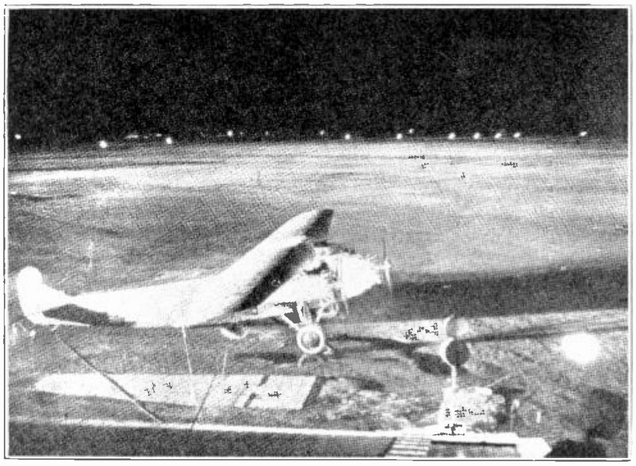

Fig. 226. This photo shows a well-lighted airport at night, and illustrates the great advantage and safety feature of such lighting for night flying.

colors or appearance of objects. They should keep all light in an upward direction at an absolute minimum, to avoid glare in the pilots' eyes. For this reason flood light units are equipped with reflectors and lenses which spread their beams in a wide angle horizontally, but very narrow in the vertical plane.

The vertical beam spread is usually not over 5 or 10 degrees, and the units should be so adjusted that the top edge of this beam does not point above a horizontal line. Flood light units should be kept down close to the ground, preferably within 10 feet. If the top of their beams is higher than this it often makes the ground surface appear closer to the pilot than it really is, when he views it from above the beam.

Fig. 226 shows a well lighted landing field which is illuminated by a 24 KW floodlight. Fig. 227 shows a bank of smaller 3000-watt flood lights in action at night.

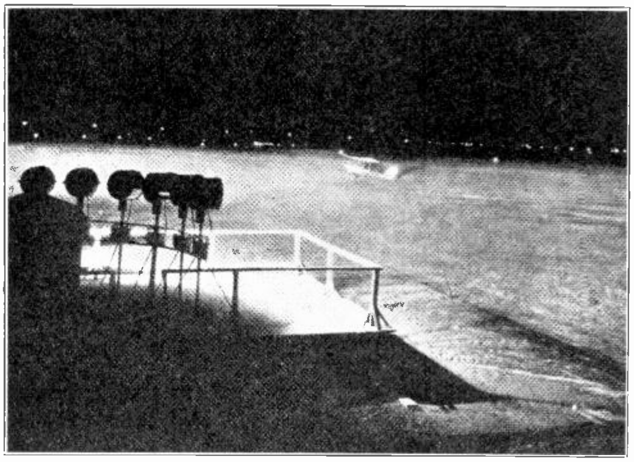

Fig. 227. This landing field is lighted with a group of small flood lights such as shown in Fig. 225.

The four lamps on the left in Fig. 228 are some of the types and sizes commonly used in airport flood lights, while the one on the right is of the type used in beacon lights. Note the special construction of the filaments and sockets of the larger lamps, and the peculiar shaped bulb of the middle one, which keeps the glass farther from the heat of the filament.

Planes should always be landed against the wind, so as the wind changes the pilot must change his direction of approach and landing run. For this reason it is best to have either portable lights, or lights located on two or more sides of the field, so the direction of the light beams can be changed with the wind and avoid making it necessary for the pilot to ever face the beams.

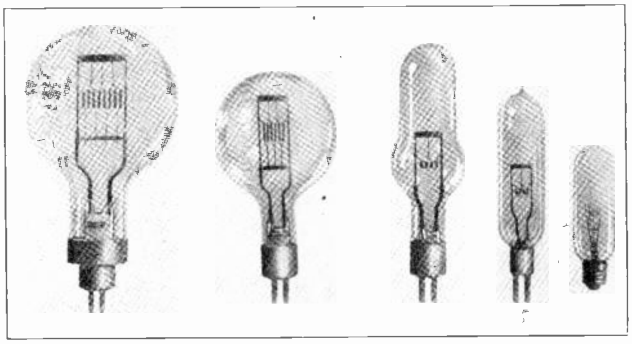

Fig. 228. Here are shown a number of powerful lamps of the type which are used in airport flood lights and beacons.

Fig. 229 shows an excellent layout for permanent flood lights located around the field and remotely controlled by switches in a control room at the hangar. The devices marked "remote controllers" are magnetically operated switches which close the circuits to these large lights, as their current would be too heavy to handle with the push buttons. Note that parkway cable is used to supply high voltage to step-down transformers at each light. This circuit is shown in a "one line" diagram until it reaches the remote control switches, where the two conductors are shown separated.

Parkway cable of this type can be buried under the ground surface 10″ or more, and makes a very good system of wiring for airports, where of course no overhead wires should be used.

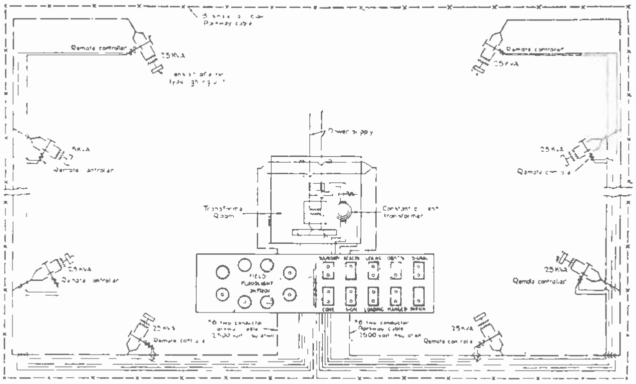

Fig. 229. Wiring diagram for a very practical and efficient airport flood lighting system The lights are fed by individual transformers, and all remotely controlled from one central point.

196. BOUNDARY LIGHTS

Boundary marker lights are used to indicate to the pilot, the location of the edges of the landing field, and are very essential in order to enable him to judge the length of the field and the proper place to approach the ground. These lights are white in color and should be either 25 watt lamps if connected in parallel, or 600 lumen series lamps. They should be spaced from 75 to 125 feet apart for best efficiency, and never more than 300 feet apart. Boundary lights are to be mounted 30 inches above the ground, and the circuits must not have over 5 per cent voltage drop at the farthest points.

Fig. 230 shows three common types of boundary lights. The one in the center is simply a lamp of the proper size enclosed in a weather proof glass globe, and mounted on a special pipe fitting on a 30-inch pipe.

These units on the pipe stems are not very visible in the day time, so it is well to have a circle of whitewashed gravel or crushed rock about 3 ft. in diameter around their bases.

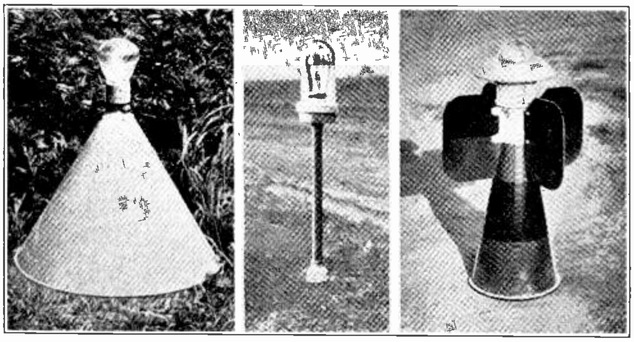

Fig. 230. Several types of boundary lights used for indicating the outline and extent of the landing field at night.

The unit shown at the left in Fig. 230 has a white metal cone base, which makes it very visible. This unit uses a prismatic glass globe which is more efficient than the clear glass, as it directs a stronger beam of the light upward.

Units such as this and also the one on the right in the figure can be merely set on the ground and connected to the circuit by detachable plugs. This makes an added safety feature in case they are struck by a plane, as they will tip over easily without doing so much damage to the plane.

197. APPROACH AND OBSTRUCTION LIGHTS

Approach lights are simply certain boundary lights that are equipped with green globes to indicate good points of approach to the runways of a field. They can also be used to indicate wind direction by turning on only those which are on the proper side of the field to bring a plane in against the wind.

Approach lights should have 50 watt parallel lamps or 1000 lumen series lamps, because their green globes absorb more of the light.

Obstruction lights are red and should be placed on tops of all trees, chimneys, water tanks, power or telephone poles or radio towers which are near to the landing fields. They should also have 50 watt parallel or 1000 lumen series lamps, and 100 watt lamps are recommended in some cases.

We have mentioned several times the possible use of either parallel connected lamps or series lamps for airport lights. Both systems are in use.

The series system has the advantages of lower cost of copper wire and less voltage drop, particularly in the longer circuits such as those to boundary lights or flood lights located on far edges of the field.

The parallel system has the advantages of being somewhat safer due to its lower voltage, using lower cost lamps, and being a somewhat simpler system, as it doesn't require sockets with film cutouts or constant current transformers.

The selection or choice of one system or the other would depend to some extent upon the size or area of the field, and the number of lights to be operated at a distance from the source of current supply.

198. ILLUMINATED WIND DIRECTION INDICATORS

It has already been mentioned that planes should be landed against the wind in order to reduce their landing speed. Wind direction indicators are, therefore, used at airports to show an approaching pilot the direction of the wind. These are very necessary, as his own air speed may make it difficult for him to tell the wind direction accurately unless he can see moving clouds or smoke.

A "wind cone" or tapered cloth sack with an opening in the small end is commonly used for a wind direction indicator. In other cases a large wind vane shaped like an arrow or sometimes like a small plane may be used.

These devices should be mounted on a pole or tower, or on the top of hangars in some conspicuous place. To be effective at night as well as during the day, they should be illuminated from above by one large reflector and light, or better still by four reflectors mounted on 2 ft. brackets as shown in the left view in Fig. 231. These reflectors should have 150 watt lamps in them, and a 60 watt red lamp above the unit to serve as an obstruction light.

In some cases wind cones are lighted from the inside by a 200 watt lamp and reflector pointed in their mouth, and free to revolve with the cone as the wind direction changes.

The right hand view in Fig. 231 shows a "wind tee" shaped like a plane, and lighted by rows of bulbs on its wings and body.

199. "CEILING" PROJECTORS

The "ceiling" projector light is used to determine the "ceiling" height. This term applies to the height of clouds or fog above the landing field. It is quite important to know this "ceiling" height

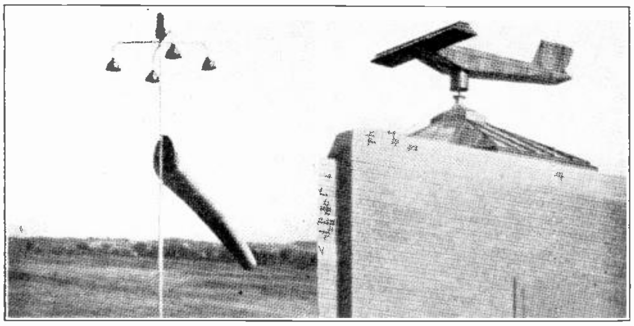

Fig. 231. On the left is shown a wind-cone, with four lights mounted above it, for illuminating the cone at night. On the right is a wind tee made in the shape of a small airplane. This can also be illuminated by rows of lamps on its wings and body.

and be able to report it by radio to aviators approaching from a distance. This gives them an idea of how close they will have to approach the ground in order to see the landing field or its lights.

This information regarding "ceiling" heights can also be transmitted to various other airports along the route, either by telephone or radio, thus keeping the pilot informed of weather conditions at various airports which he may have to use.

For a "ceiling" light a 500-watt, narrow beam projector can be used. If this unit is tilted upward at an angle of 45 degrees with the horizon, then the spot where its beam strikes the under side of clouds or fog will be directly above a spot on the ground, which is the same distance from the light unit as the bright spot on the cloud is above the earth. This can be proven by the fact that the diagonal of a square is at an angle of 45 degrees with either its base or vertical side, and, of course, the base of a square is the same length as its vertical side. See Fig. 232.

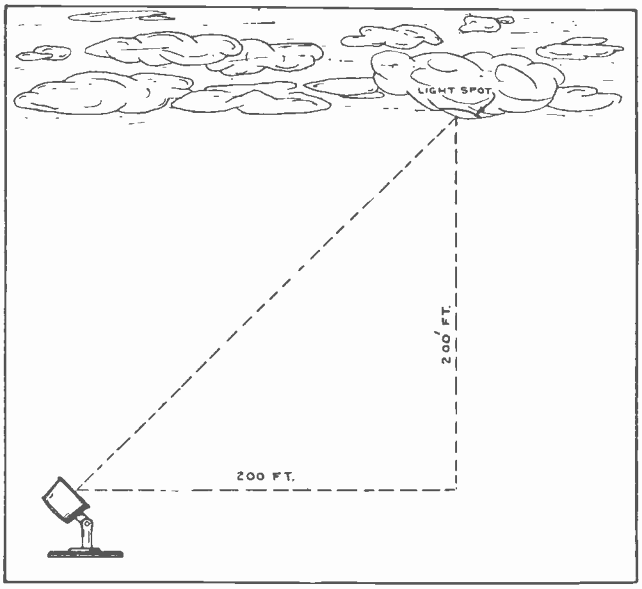

Fig. 232. This diagram illustrates the method of calculating the height of clouds or fog with a ceiling projector.

Other angles can be used, and then with a simple quadrant and pointer set in the same plane as the projected beam, and a definite distance away from the projector; we can by sighting along the pointer toward the point where the beam strikes the clouds, obtain a direct reading of the "ceiling" height.

200. HANGAR AND SHOP LIGHTING

The interior lighting of airport hangars and repair shops is another very important use for electric illumination. In the handling of planes in and out of the hangars, and in making repairs on them, good lighting is a great time saver and promoter of safety.

In the shops where some of the very critical repair and adjustment of engine or plane parts must be made, it is equally important to have efficient illumination. Fig. 233 shows an exterior view of a well-lighted hangar in the upper part of the figure, and an inside view below. Industrial lighting fixtures and principles can be applied to these buildings.

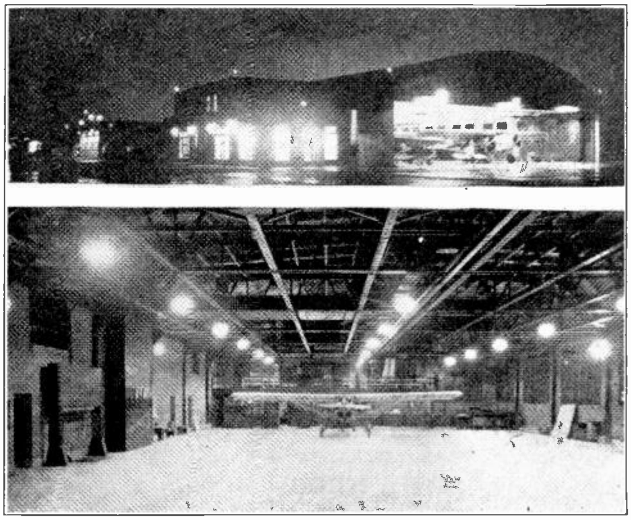

Fig. 233. The top view shows the outside appearance of a well lighted hangar, and below is shown the inside of the hangar and the arrangement of the lighting units.

201. AIRWAY LIGHTING OR ROUTE BEACONS

The Federal Government requires airway beacons approximately every ten miles along principal flying routes. These beacons should consist of projectors at least 24 inches in diameter, using 1000-watt lamps and producing 2,000,000 beam candlepower. These units are kept continually revolving at a speed of six revolutions per minute by a small motor and gear mechanism.

In addition to the revolving beacon there should be two "On Course" lights with 18-inch, 500-watt projectors to indicate to the pilot the direction of the next airport. These course lights can be equipped with a mechanism to keep them continuously flashing the number of that particular beacon in the Morse Code. This also indicates to the pilot the distance he has progressed along the course. These lights can be fitted with amber or red cover glasses, while the rotating beacon uses a white beam.

Fig. 234 shows a typical airway beacon on a tower which is also equipped with a "wind-cone". This particular beacon is located at an intermediate landing field. Where beacons of this type are near to power lines they can obtain the energy for their lights from these lines. In other cases they must be equipped with an independent lighting plant similar to farm lighting plant installations. These beacons and plants have to be maintained and inspected by trained men, as their condition and dependable operation are very important. Imagine yourself in the place of a pilot, and the great comfort you would receive from being able to see at least one beacon ahead at all times along your route. These airway beacons are a great safety factor in night flying.

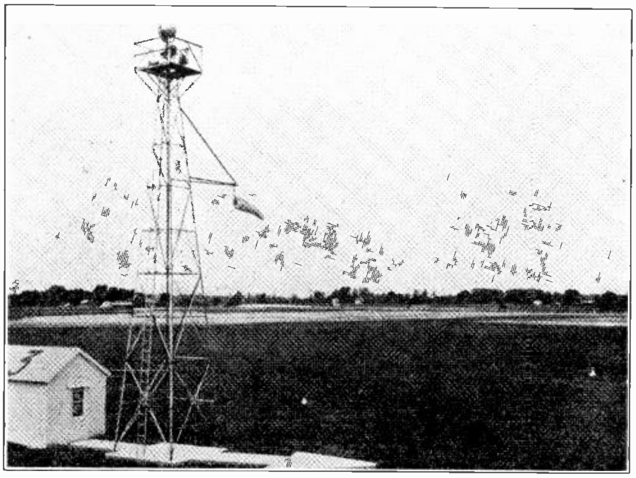

Fig. 234. This photo shows a typical airway beacon mounted on a steel tower, and also provided with a wind-cone for day-light use only.

202. AIRPLANE LIGHTS

It may seem rather surprising to talk of lights on airplanes, as probably a great many people don't even realize that planes carry lights. Government regulations require, however, that every plane which flies between sunset and sunrise must be equipped with flying lights, to indicate its position and direction of flight to other pilots.

These lights consist of small automobile-type lamps of 18 or 21 candlepower, mounted in stream-lined pyralin shells. These are mounted on the tip of each wing, and one on the top of the tail or rudder. The left wing light must be red and the right one green, while the tail-light shows clear white. Government specifications can be obtained governing the proper angles between these lights. Airplanes also require lights on the control-board in the pilot's compartment. These lights are usually equipped with a small rheostat so they can be adjusted to just the right brilliancy to show the instruments, and in this manner avoid glare in the pilot's eyes and enable him to see better in the darkness ahead.

Many of the larger planes, or planes intended for night flying, are equipped with powerful landing lights for use in landing on unlighted fields. These units use a lamp with a concentrated filament which requires about 35 amperes. They are, therefore, kept switched off when the plane is flying, and turned on only when needed for use in making a landing. Otherwise they would place a very heavy drain on the battery.

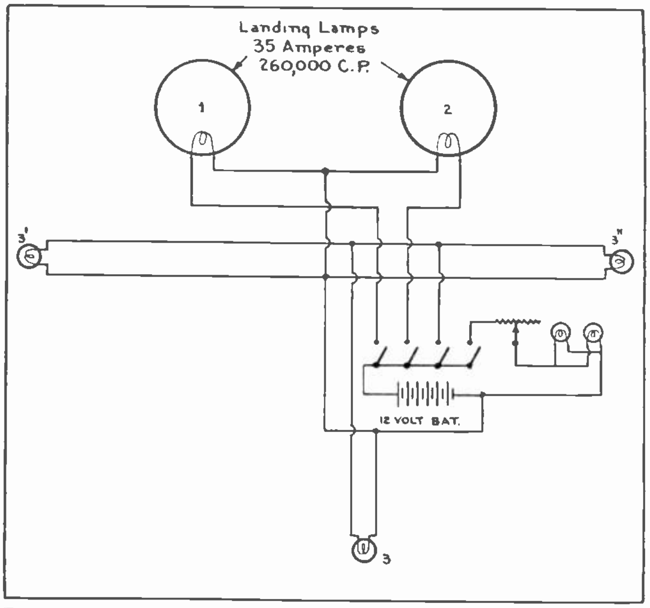

Fig. 235. Simple wiring diagram for lights on an airplane. Trace this circuit and note which lights each of the switches control.

Ordinary flying lights and landing lights can be supplied from a light-weight battery carried aboard the plane. Fig. 235 shows a wiring diagram for the commonly used lights on a plane, and Fig. 236 shows the mounting of wing tip and rudder lights, as well as landing lights. The upper part of this figure shows the tail-light mounted on top of the plane rudder, in its stream-lined shell. You will note that the front end of this shell is painted black while the rear end, or more sharply tapered end, is clear and allows the light to escape in this direction. The lower left view shows a wing tip

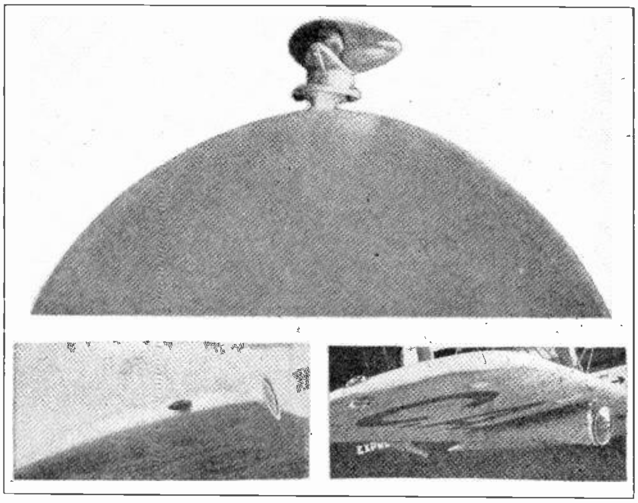

Fig. 236. The top view shows a tail-light mounted on the rudder of an airplane. The two views below show two methods of mounting wing tip lights and landing lights.

light for the right wing, and also a landing light which is built in, or stream-lined, with the forward edge of the wing. The lower right view shows a different form of mounting for the wing light, and also for the landing light, which in this case is hung underneath the wing in a stream-lined shell.

This stream lining is exceedingly important, and every device of an electrical nature or otherwise, that is attached to the outer surface of any airplane, should be stream-lined to prevent air resistance to the forward motion of the plane. The greater part of this resistance occurs at the trailing ends or edges of such devices where violent whirling eddy currents are set up in the air, causing a sort of vacuum at these ends or edges; so you will notice that all of these devices taper most toward their rear ends. This is a very good point to keep in mind when installing any equipment on airplanes.

Fig. *237* shows the interior lighting of a large cabin-type passenger plane. Many of these planes carry lighting of this nature, which not only makes them very attractive in appearance but makes it possible for passengers flying at night to read, play cards, or otherwise occupy their time.

Where large numbers of lights are used in this manner the plane is usually equipped with a wind-driven generator mounted on the outside of the fuselage, or between the wings, in a stream-lined casing and driven by a small wind propeller.

From the foregoing material on aviation lighting, we can see that this is developing into a tremendous field for trained electrical men who have a good knowledge of the principles of electric wiring and testing, as well as the fundamentals of illumination.

It will be well for every student to keep on the alert for opportunities in this field, and not to overlook the possibility of being the first in his home town to suggest that they provide a well-lighted airport for the general good of the town; and possibly get the job of laying out and installing the equipment yourself.

Fig. 237. The insides of large cabin-type planes are often lighted to give many of the same comforts and conveniences as a Pullman coach.

MERCURY VAPOR LAMPS

A special type of lighting unit, which has become very popular and generally used in industrial plants and large machine-shops, is the Mercury Vapor Lamp.

Its particular advantage lies in the yellow-green color of the light it produces. This light is particularly good for certain machine-shop operations, and the handling and assembling of small bright metal parts, as well as in textile mills.

Lamps of this type are not intended for commercial or home lighting, but only for such special applications as mentioned, and where its peculiar color is not objectionable. Ordinary Mazda lamps produce a light which, as before mentioned, is largely white in color, but also contains a considerable percentage of violet and red rays. These rays are somewhat tiring to the eyes in certain classes of work.

The Mercury Vapor lamp produces light with a predominance of yellow and green rays and a small percentage of violet and blue. In light of this color small objects, such as screws, pins, bolts, nuts, etc., stand out very sharply. Therefore, the use of this type of lighting unit increases production speed and improves quality in machine shops, with less eye-strain for employees. Large automobile manufacturing plants have installed many thousands of these units.

203. MERCURY VAPOR TUBES

The source of light in a Mercury Vapor lamp is a long glass tube, approximately an inch in diameter and 50 inches long, in which there is sealed a small quantity of mercury. This tube is suspended at a slight angle so the mercury runs down to the lower end, at which there is a bulb equipped with a metal electrode sealed into the glass and in contact with this pool of mercury.

Fig. 238 shows a view of a complete unit with the tube mounted in its trough-shaped reflector. The lamp mechanism, which will be explained later, is in the metal housing above the reflector. The upper end of the tube has two bulb-like horns or extensions on the glass, with a metal electrode sealed into each one. Wires from each end of the tube connect to proper coils in the lamp mechanism and from this to the supply line. Most of the air has been exhausted from the tubes of these lights, leaving them to operate in a vacuum. When they are cold most of the mercury may be condensed and run to the pool at the lower end of the tube, so it is necessary to use a spark or impulse of rather high voltage through the tube first to vaporize a small amount of the mercury.

We should understand that a high voltage spark will pass through a much greater distance in an ordinary vacuum than through open air, so by applying about 2000 volts from an induction coil in the lamp mechanism, we can start an arc through the tube.

As soon as a little mercury vapor is built up it forms of soft green arc or light throughout the full length of the tube. Thus the name Mercury Vapor Arc.

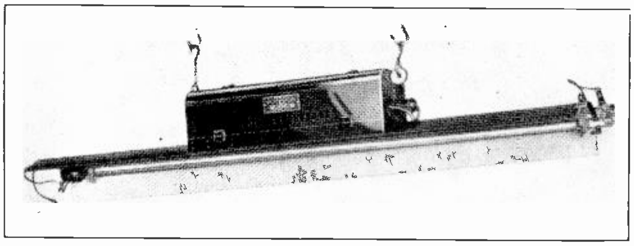

Fig. 238. This view shows a complete mercury vapor lamp. Note the mounting of the tube under the long reflector, and the manner in which the lamp is hung at a slight angle.

As long as the lamp is operated this arc continues to agitate the surface of the mercury pool and create sufficient vapor to keep it going. After the vapor forms and the arc is established, the resistance of the lamp tube is low enough so the arc can be maintained with from 70 to 100 volts, and about 3.8 amperes on the common sized lamp. The total wattage rating of the lamp is about 450 watts, part of which is used up in the resistors and coils. The voltage from the lamp coils is about 120 to 130 volts, but not all of this is applied to the tube.

The source of light from these units, being spread over such a long tube, distributes the light softly and evenly with very little glare and shadow effects, which is one of their decided advantages.

The average life of the tubes is two years or more if they are properly cared for, but they should be very carefully handled as it is easy to crack them and allow air to leak in if the tubes are strained, or if they are bumped and cracked. For this reason they are protected by long metal bars running under the length of the tube and attached to the ends of the reflector.

204. LAMP MECHANISM

Fig. 239 shows a top view of the lamp mechanism and coils. This consists of a pair of resistance units at the left end, and next to these are the coils of an auto transformer which raises the line voltage, and has taps brought out to terminals to obtain the proper voltage adjustment for the operation of the tube. The pair of coils at the right of the center are those of an induction coil which generates the high voltage for the starting spark to ignite the tube or start the lamp. Just to the right of these coils is a small mercury switch in a glass tube. This switch is mounted on a pivot so when the coils are energized and the ends of their cores become magnetized they attract a small iron plate on the mercury switch, tilting it up and causing a "V" shaped depression in the glass to separate the pool of mercury and break the circuit.

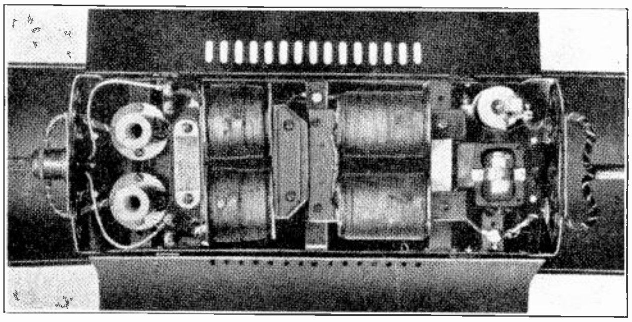

Fig. 239. Above is shown the mechanism and coils of a mercury vapor lamp. Also note the mercury shifter switch at the extreme right end.

When this circuit is broken and the flux around the induction coils is allowed to collapse, it induces a high voltage of about 2000 volts in these coils. There is also an added resistance unit just above this tilting or "shifter" switch in this view.

205. LAMP CIRCUIT AND OPERATION

Fig. 240 shows a simplified wiring diagram for an A. C. mercury vapor light. Examine this diagram carefully and note the connections and circuits through the various coils and the tube.

We know that alternating current is constantly reversing in direction, but let's assume for the moment that the current is entering at the lower line wire as shown by the small arrows. We can trace this flow of current through the lower half of the auto transformer—A.T., then through both windings of the induction coil—I.C., through the mercury switch—M.S., and protective resistance—R3; then back to the upper line wire.

This flow of current energizes the induction coils and magnetizes their cores. This magnetism attracts the metal plate or armature on the mercury switch, causing it to tilt and break the circuit we have just traced.

When this current stops and the flux around the induction coils collapses, it induces the high voltage previously mentioned, and this is applied to the ends of the lamp tube as shown by the dotted arrows.

We also find that this high voltage is applied across the two terminals at the lower end of the tube. One of these wires we know is connected to the electrode in contact with the mercury, and the other one is connected to a thin metal band which is clamped around the stem of the tube, and also attaches to a strip of metal foil which is pasted to the under side of the bulb.

The high voltage across these two points sets up a capacity charge through the glass to the mercury, exciting the surface of the mercury and emitting the first mercury vapor. As soon as this vapor is started, the high voltage across the ends of the tube establishes the arc. After the arc is started the line current will flow alternately through resistance R1 and R2, and into the two horns or electrodes at the upper end of the tube, as shown by the large arrows, down through the tube and back through both windings of the induction coil, to the center tap of the auto transformer. From here it returns to either line wire, according to the polarity of the A.C. line at that instant.

The auto transformer A.T. serves to increase the voltage of the tube slightly above the 110 volts on the line.

You will note that the current flows through the tube in only one direction, so we find that this tube also acts as a rectifier as well as a source of light. In other words, current can flow from the metal electrodes at the top of the tube, into the mercury vapor, but it cannot flow from the vapor back into these electrodes. because of the high resistance film built up at their surfaces the instant the reverse current attempts to flow. This principle will be more fully explained in a later section.

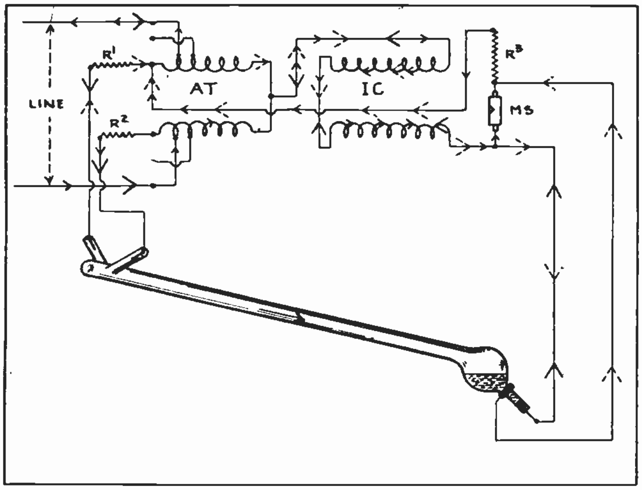

Fig. 240. Wiring diagram of a mercury vapor lamp, showing the various circuits traced through the tube and coils.

These mercury vapor lights are also made to operate on direct current, and those for D.C. operation have no transformer, but merely the pair of induction coils and mercury switch in addition to the tube; so their circuit is much simpler than the one we have just traced.

206. INSTALLATION

When installing lighting units of this type they should be suspended by two pieces of chain or strong rope, and hung with the tube at the proper angle; or otherwise they will not operate satisfactorily. This angle can easily be determined by leveling the tops of the hooks provided with the unit, as these hooks are made in uneven lengths to obtain the proper slope for the tube. The upper end of the reflector should be about 8 inches higher than the lower end when the mounting is finished.

The next step is to insert the shifter switch in its mounting and connect its terminals to the binding post provided. This shifter when mounted, should rotate freely, and it should not be possible for it to slip to either side far enough so that the metal armature can touch either of the iron cores of the induction coils. Next, the tube should be unpacked and washed clean before mounting. Remember to handle these tubes very carefully to avoid cracking them. To test new tubes before placing them in the lamp, or for testing old tubes that are thought to be defective, the condition of the vacuum can be determined by the sound of the mercury in the tube when it is allowed to run slowly from one end to the other. Tilt the tube up so the mercury runs slowly down to the opposite end, and if it produces sharp-sounding metallic clicks like shot rolling in the tube, this indicates that the vacuum is good. If the mercury slides to the bottom end of the tube without producing these clicks it is an indication that the tube has leaked air and the vacuum is destroyed.

The end with the two horns should be at the higher end of the reflector. Place the tube in the holding clamps and tighten them securely, but not too tight, or the glass may be cracked when heated. It should be possible to rotate the tube with the fingers after the clamps have been fastened. Be sure that the single negative terminal points straight down from the black bulb. Observe the mercury to see that it covers the metal contact which is sealed in the glass at this terminal. If these lamps are operated without sufficient mercury in the bottom end the tube may be ruined.

After the tube is installed, it is a very simple matter to connect its terminals to the wires provided on the lamp unit and reflector.

207. OPERATING VOLTAGE

The tubes are rather critical as to their operating voltage, and if the line voltage is considerably lower than normal because of voltage drop, the lamps may not start promptly. In this case, when they are turned on the mercury switch may keep operating and clicking repeatedly, without starting the lamp. When this happens the voltage at the line terminals should be tested with a volt meter, and if it is found too low the connections can be shifted to the inner taps shown on the auto transformer coils. This will enable the transformer to raise the voltage on the tube.

These terminals are usually marked for the different voltages, so it is easy to tell where to connect the line wires. When these lamps are connected on circuits from 95 to 125 volts, wires not smaller than No. 12 should be used, and each circuit for a single lamp should be fused for 15 amperes.

For each additional lamp placed on any branch circuit, the fuse should be increased by 10 amperes per lamp.

208. CARE AND MAINTENANCE

If mercury vapor lamps are installed in cold rooms they may be somewhat slow in starting and also give less than normal candlepower. In such cases it may also be necessary to change the line connections to apply higher voltage to the tube; or even to increase the line voltage somewhat.

The resistance units used with these lamps occasionally burn out but they can be very easily replaced, as they are screwed into standard sockets on the unit, the same as a lamp or plug fuse would be.

In maintaining a group of these lamps it is very important to keep the tubes clean by washing them occasionally with soap and water, and also to keep the negative terminal and starting band free from dust and dirt. An accumulation of dirt around the starting band will often allow the high voltage starting current to flash over at this terminal and cause the lamp to fail to start.

If a lamp fails to start after several operations of the shifter switch it should be turned off until the trouble is located, so that this switch will not be damaged by continuous operation. Failure to start is usually due to one of the following causes: low line voltage, very cold tube, blown fuses, burned out resistance unit, stuck or broken shifter switch, loose connection, cracked tube, or dirt accumulated at the starting band on the negative terminal. Checking each of these items systematically will usually locate the trouble.

The transformer or induction coils can easily be tested for open circuits, shorts, or grounds, as explained in previous sections.

Be very careful not to connect an A.C. lamp on a D.C. circuit, or a 60 cycle A. C. lamp on a 25 cycle circuit.

Extra tubes and resistance units can be obtained from the lamp manufacturers and kept on hand for convenient and prompt repairs.

The extensive use of this type of lamp in manufacturing plants will make this material very valuable for any maintenance electrician to know, and have on hand for future reference.

HOME LIGHTING

With all the vast number of homes in this country that are wired for electricity, there are still hundreds of thousands of old houses to be wired, as well as the many thousands of new ones that are built yearly.

Another very important fact to consider, from the standpoint of opportunities for the trained electrical man, is that actually a majority of the homes that have been wired a few years do not have efficient or adequate lighting. This is partly because the old style fixtures installed years ago were not made very efficient, and partly because it used to be the opinion that home-lighting fixtures should be chosen for beauty and appearance, rather than for lighting efficiency.

This idea is out-of-date, and the most important essential in modern home-lighting is first to see that the wiring and fixtures are planned and chosen to give adequate light of the right quality; and second, to give proper attention to the appearance and artistic features.

We should keep well in mind that good fixtures are now made to provide ample and proper lighting, as well as pleasing appearance and decorative effects.

Properly designed lighting is one of the greatest comforts and conveniences that any home owner can enjoy, and in building new homes or remodeling old ones, the lighting should be considered equally as important as many pieces of the furniture, and as one of the most important features of the decorations.

Home lighting does not require any elaborate calculations, but the illumination for practically any room can be easily planned by application of the simple fundamentals of illumination, and the general rules on the following pages. Furthermore, the great number of homes which really require improved lighting and more modern fixtures, offer splendid opportunities right in his own neighborhood, to practically every graduate who wishes to take advantage of them.

209. LIVING ROOM LIGHTING

The living room is, of course, one of the most important rooms to have well lighted, as in the average home this room is the one in which the members of the family spend much of their time, and also one that we wish to have most attractive when guests are present.

Proper lighting units for the living room are the ceiling shower or cluster, wall bracket lights, and portable floor or table lamps. The ceiling fixtures are often called chandeliers or by the more modern name **Luminaire.** No one of these types of lights is alone sufficient for a well-lighted living room, but two or all three of them should be combined to obtain the varied or complete lighting effects desirable.

210. CHOICE OF CEILING, WALL, OR PORTABLE UNITS

The ceiling fixture is, of course, the most essential and useful of these units, and for the average sized living room it should consist of four or more lamps of 40 watts each or larger, and they should be equipped with glass shades to soften the light and prevent glare.

Fig. 241. This photo shows a living room lighted only by the ceiling fixture. There is plenty of light in the center of the room, but you will note the room appears very plain.

The purpose of the ceiling fixture is to provide general light throughout the room, and it should provide sufficient light to give the room a bright and cheerful appearance.

Ceiling fixtures should, of course, be chosen of a design and color to harmonize with the room furnishings and decorations, and they can be hung either quite close to the ceiling in low rooms, or suspended down farther in higher rooms.

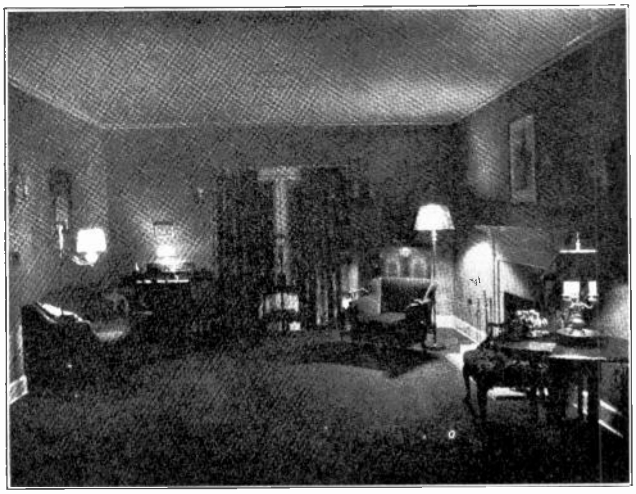

Fig. 242. The same living room as shown above lighted only with portable lamps. This condition would be very good for reading directly under these lamps.

Usually they will shed a more even light on the ceiling if they are down from 18 to 30 inches from it. The bottom of the fixture should be at least 6 ft. 6 in. or more from the floor; and preferably 7 ft. or more, even if it is necessary to use a very short fixture close to the ceiling.

Fig. 241 shows a living room lighted by a ceiling fixture only, and while the room is fairly well lighted, the general appearance is plain and drab and the light is centered too much above and below the fixture.

Portable floor and bridge lamps, as well as table lamps, are very good for local spots of light and for reading in a chair directly beneath them without lighting the rest of the room. They also add a great deal to the decorative appearance, with their local spots of light and their colored shades.

There is in many homes, however, a wrong tendency, to depend on portable lamps almost entirely for living room light. Portable lamps are not intended for this, and do not give sufficient general illumination for many occasions.

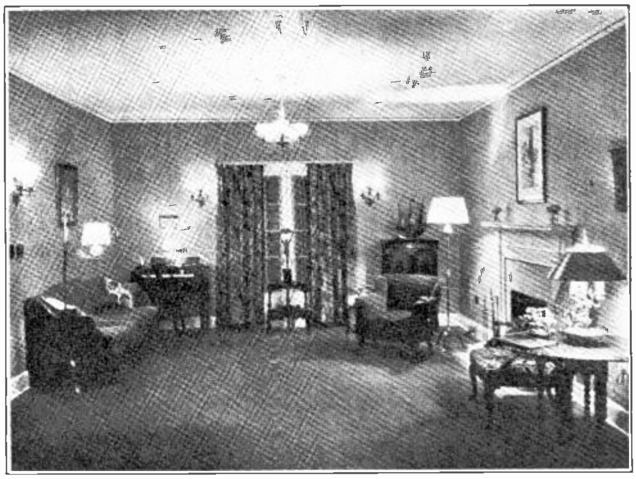

Fig. 243. Here we have the same room lighted by the ceiling unit, wall lights, and portable lamps. Compare carefully the different effects in the three photographs on this page.

Fig. 242 shows a room using only the portable lamps, and while the effect is restful and fine for a quiet evening alone with a book, it would not do at all for a room full of company, with card games or social gatherings.

Floor lamps with open tops, and in some cases extra lamps and reflectors to direct light to the ceiling, are very useful and beautiful in their effects.

Fig. 243 shows a room well lighted by the ceiling luminaire and portable lamps, and with the walls "livened up" by wall bracket lights. A combination of lighting units of this kind provides wonderful possibilities and comfort, by the use of all or certain ones of the lights at proper times.

Novelty table lamps, concealed cove lights, and artificial electric windows, can also be added to produce beautiful effects and increased attractiveness of the living room. Some of these are shown in Fig. 244.

Sun parlors or porches should also be well equipped with outlets for floor and table lamps; and ceiling fixtures of a type that give a soft light are desirable.

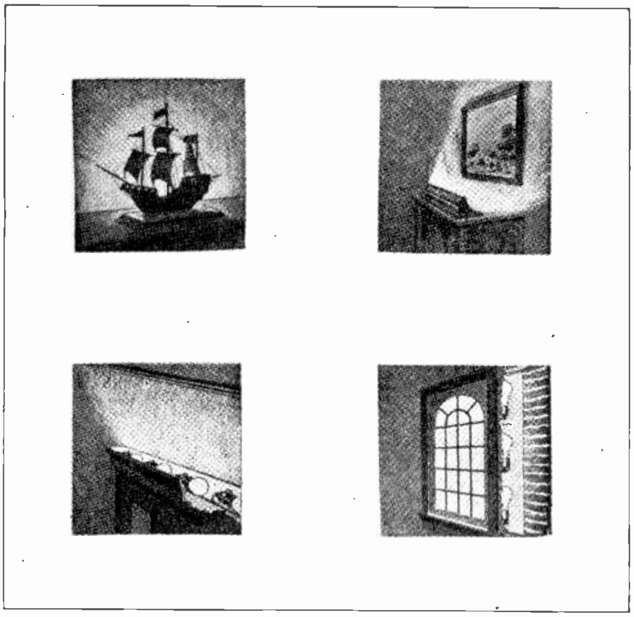

Fig. 244. These four views illustrate some of the effects obtainable with lights placed behind decorative objects, concealed coves, and artificial windows.

211. DINING ROOM FIXTURES

In the dining room we should have a flood of soft white light on the table, and sufficient light on the walls and ceiling to prevent them from appearing dark and depressing. There should also be a reasonable amount of light on the faces of the diners. Here we can use a good-looking ceiling fixture with four or more shaded lamps of about 50 watts each or larger. This fixture should be hung low enough to center its light well on the table, and yet not low enough to shed too much light in the eyes of persons seated at the table. About 30" to 36" above the table is generally a good height.

Buffet lights add to the appearance, and provide part of the extra light needed for the walls. A very well-lighted dining room is shown in Fig. 245.

Beautiful effects in dining room lighting can also be obtained with a semi-indirect ceiling fixture and wall lights of the types shown in Fig. 246.

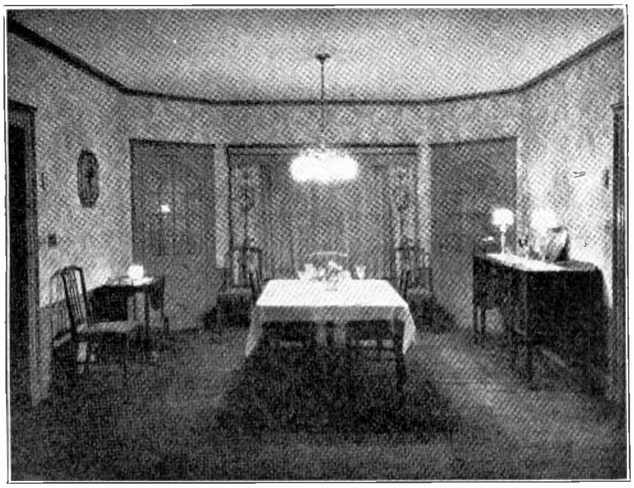

Fig. 245. The above dining room photo shows the manner in which the light should be principally centered on the table, and yet should light the walls and ceiling sufficiently to prevent a dark appearance in the room.

Semi-indirect ceiling luminaires of this type shed soft white light on the table to make the dishes, food, and silverware show up to excellent advantage; and they also direct sufficient light on the ceiling to give a cheerful and well-lighted appearance to the room.

The inverted bowl wall lights of the type shown in Fig. 246, add the small fountains, or touches of light on the walls, which just complete the perfect appearance of this room.

Fig. 247 shows a number of very excellent modern fixtures which are both efficient and beautiful in appearance. These units deliver a sufficient quantity of well diffused light, and add to the comfort, appearance, and actual value of a home enough to be worth many times their cost.

The semi-indirect unit in the upper right corner of Fig. 247 is typically a dining room fixture, and the one in the center of the top row is particularly good for use in low living rooms. The others are very excellent living room fixtures.

Fig. 248 shows several styles of fixtures that are particularly good for dining room lighting.

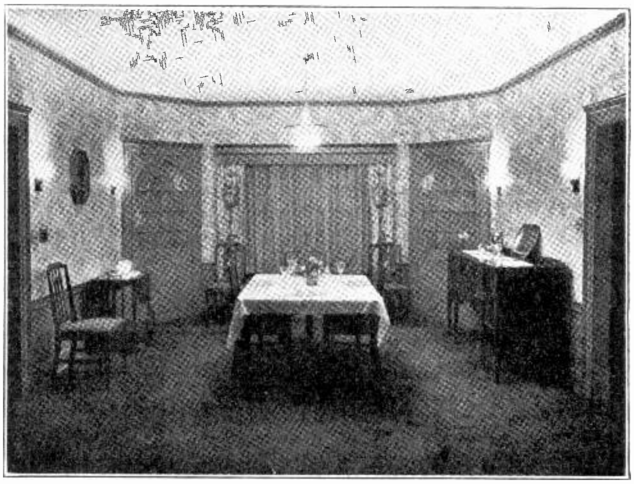

Fig. 246. A combination of a semi-indirect ceiling fixture with shaded wall lights of the type shown, produces a very beautiful lighting effect.

212. BEDROOM LIGHTING

Bedrooms should also be well lighted with soft light that is not tiring to the eyes of one lying in bed. Ceiling units of the types shown in Fig. 249 and mounted close to the ceiling are very good.

It is very important to have sufficient light at dressing tables and on mirrors; and wall bracket lights or attachable brackets for clamping on each side of the mirrors should be provided.

Portable lamps on small tables by the beds, or clamp lights to mount on the heads of beds are ideal for reading lights.

Plenty of convenience outlets should be provided around the walls of bedrooms, for the attachment plugs of portable lamps, curling irons, fans, etc.

A switch controlling one of the lights in the room should be located near enough to the bed to be within easy reach of a person either in bed or right at its edge.

The clamp lights on the head of the bed will accomplish this, or in some cases a small light is mounted under the bed with a switch at the head of the bed. These lights will shed sufficient light on the floor to enable one to move about the room easily, and yet they do not throw light in the faces of other sleepers. Fig. 249-A shows a well lighted bedroom.

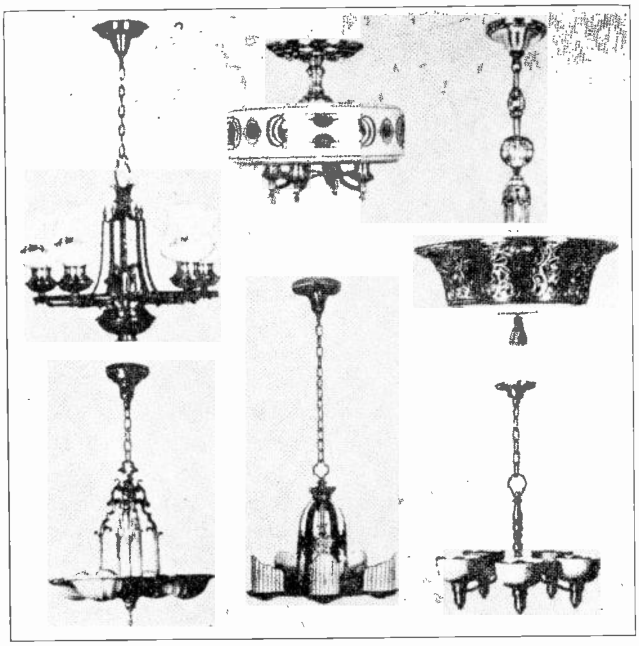

Fig. 247. Several very efficient and popular types of dining room and living room fixtures.

213. KITCHEN UNITS

The kitchen is one of the simplest rooms in a house to properly illuminate, and yet it should always receive careful attention, because it is the one in which the housewife spends a great deal of her time.

A low hanging fixture should never be used in a kitchen, but instead a short unit which is high up and close to the ceiling should be used. It should be of the enclosed type with a dense white glass bowl, and equipped with a 100-watt lamp.

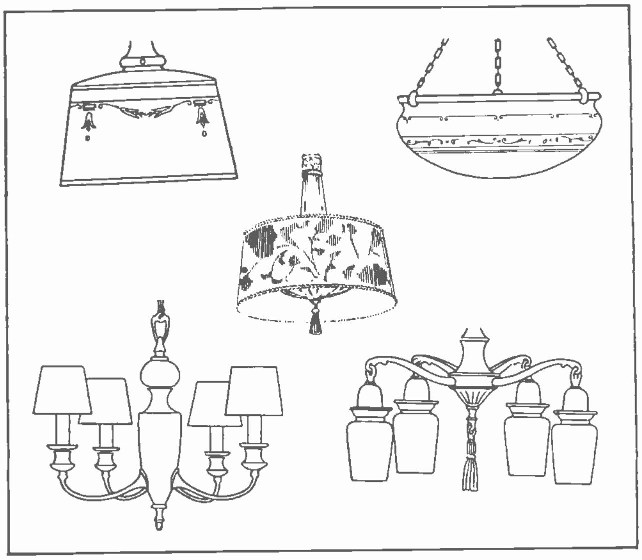

Fig. 248. Units of the above type are very appropriate for dining room lighting.

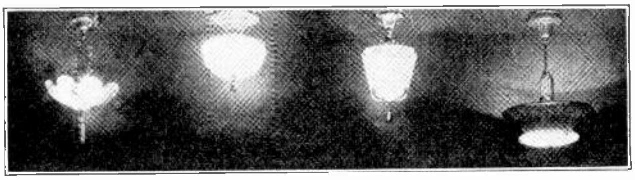

Fig. 249. Several types of bed room fixtures which are mounted close to the ceiling and produce soft, well-diffused light.

Such a unit will provide well diffused light of good intensity throughout the ordinary kitchen. In addition to this overhead unit, it is usually well to have a wall bracket light with a white glass shade mounted over the sink, and possibly one over the range. Fig. 250 shows how cheerful a kitchen can be made with proper lighting and light colored walls and ceiling.

Fig. 249-A. This photo shows a well lighted bedroom, using the dome light in the ceiling and portable lights on the dresser and table.

The left view in Fig. 251 shows more clearly, the shape of the kitchen unit and wall light and on the right is shown a very good unit of the porcelain enameled, metal dome type, to be used in the laundry room in basements.

Lighting units of this type are so low in cost compared to their value in the home, that it is often

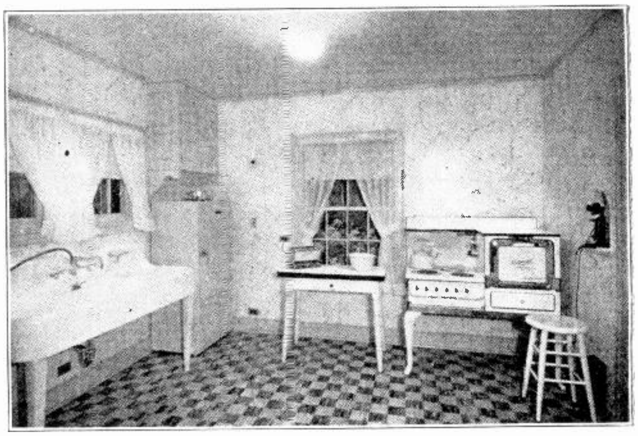

Fig. 250. A well lighted kitchen, such as shown above, is one of the greatest conveniences in any home.

very easy to sell the home owner modern kitchen and laundry lighting equipment and get the job of replacing his old ones with the new.

Clothes closets should be equipped with a wall bracket light over the door, and enough to one side so if a pull-cord switch is used the cord will not hang directly in the doorway. A wall switch at the door or just inside may also be used.

Fig. 251. At the left is shown the arrangement of ceiling unit and wall bracket light for kitchen. On the right a very efficient type of reflector for laundry rooms and basement lighting.

214. BATH ROOM LIGHTS

Bath rooms should have two wall bracket lights above the wash stand, one on each side of the mirror. Another above the mirror is also very convenient for general light in the room and for combing one's hair. Bath room lights can be controlled by key sockets or pull chain sockets on the bracket lights at the mirror or by wall switches for lights out of reach. If chain sockets are used on non-polarized wiring systems, insulator links should be put in the chains to reduce chances of persons obtaining shocks by touching the chain when one hand is on a faucet.

The mirror lights should be low enough to well illuminate one's face and the under side of the chin for shaving, and should use 50-watt inside frosted bulbs.

Large dark colored bath rooms may also require a ceiling light.

215. PORCHES, ATTICS, BASEMENTS, AND GARAGES

Porches and entrances can be made safer and much better appearing at night, by the use of ceiling lights of lantern design on the porch, or bracket lights of suitable weather proof type at each side of doors.

Attics and basements should be lighted with drop-cord lights or other low cost units, and in sufficient number to enable one to work conveniently in any part of them. Where basements are used for childrens' play rooms ceiling fixtures similar to kitchen units can be used, and controlled by pull-cords or wall switches.

Garages should not be forgotten, and the light should be controlled by three-way switches both from the house and garage as previously explained. One or more attachment plug receptacles should also be provided, to permit the use of portable trouble lights or vacuum cleaners around the car. Fig. 252 shows a number of the various types and sizes of Mazda lamps commonly used in home lighting.

In wiring any home for lights remember to install plenty of convenience outlets in all rooms, and three-way or four-way switches where they will add to the convenience in controlling the lights.

216. QUALITY WORK PAYS

Always recommend lighting equipment that will be a permanent satisfaction to your customer as well as a credit to yourself. The home owner's pride in the appearance of his home, and his concern for the comfort, convenience and safety of his wife and children, are points that should not be forgotten in selling good lighting.

In completing this simplified practical material on illumination you can readily see that it is one of the greatest fields of opportunity for profitable and interesting work that the electrical industry offers to the trained man. We are certain that whether you choose to specialize in this line of work, either as an employee of a contractor or fixture dealer, or in business for yourself, you will find the material covered in this section of great value to you. No matter what line of electrical work you may follow, a practical knowledge of these principles of good illumination will prove handy to you many times in the coming years.

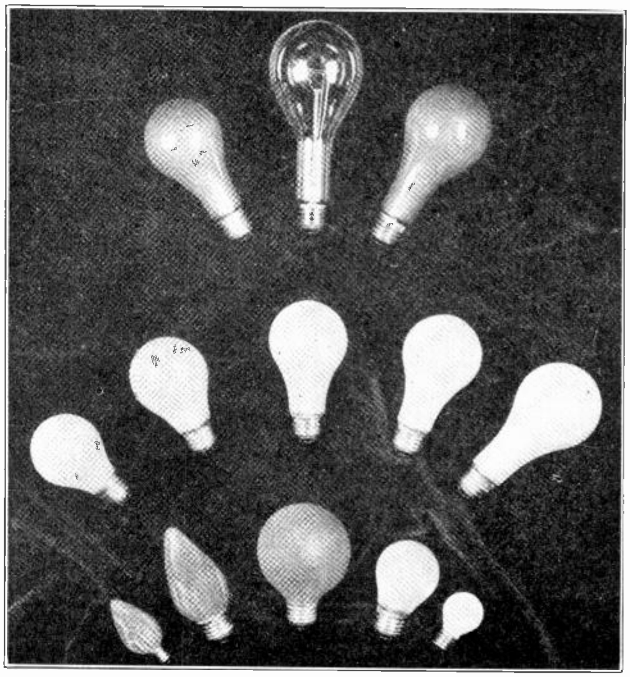

Fig. 252. Above are shown a number of modern Mazda lamps of the types commonly used in home lighting.

COYNE
Electrical School
CHICAGO ∼∼ ILLINOIS
ESTABLISHED 1899

ELECTRIC REFRIGERATORS

Refrigeration Principles
Construction, Operation and Care
of Domestic Refrigerators

ELECTRIC REFRIGERATION

Electric refrigerators have come into such general use in homes in the last few years that this field is well worth the attention of every student.

These machines are being manufactured and sold by the millions for home use alone, there being over a million of one manufacturer's make now in service.

In addition to those in homes there are thousands of larger units in commercial establishments such as drug stores, soda fountains, meat markets, florists, and other places where low temperatures are needed to preserve things.

Many large packing houses and ice-making plants also have their refrigeration machines operated by electric motors.

The numerous small units create a lot of work for electrical men in the care and servicing of their motors, switches, fuses, etc.; and in the larger plants it is often an advantage for the maintenance electrician to have a knowledge of refrigeration principles.

In addition to servicing domestic refrigerators, there are great opportunities in selling these units, and for those who like sales work and have a good knowledge of electric refrigeration this is an excellent field.

217. PRESERVATION OF FOODS BY LOW TEMPERATURES

It is commonly known that foods of various kinds, particularly meats, vegetables, fruits, and milk, will keep much longer without spoilage or decay if they are kept in places of low temperature. In temperatures below 50 degrees Fahrenheit (50° F.) the destructive bacteria cannot grow or multiply. Therefore, foods can be kept fresh and safe for use for many days in such cold places, while without refrigeration they would spoil in a few hours of hot summer weather, or even in a well heated house in the winter. Thus the saving in preserving foods will more than pay for refrigeration, and a number of added conveniences, such as preparation of delicious cold desserts, can be obtained.

Ice boxes have for many years been used for this purpose in homes. Mechanical refrigerators are fast replacing them, however, and deserve the great popularity which they have acquired.

They are much cleaner and more convenient, and provide a dryer and more even cold temperature which is more effective in food preservation.

Their cost of operation is generally a little less than for ice, and their advantages are well worth their higher first cost. Fig. 253 shows a large size home type electric refrigerator of a popular make.

218. REFRIGERATION PRINCIPLES

While these units are called electrical refrigerators, the electricity does not enter directly into the refrigeration process, but is used to provide the power to drive the compressors in these machines.

Refrigeration is simply a process of removing some of the heat from an enclosure where we do not want it, to some other place where it does no harm.

There are a number of ways in which this can be done. Heat always has a tendency to flow from points of high temperature to surrounding points of lower temperature. Heat escapes from a stove by **radiation** through the air, into metal pots and pans by the heat **Conductivity** of the metals, and throughout liquids or gases by **Convection**, or the motion it sets up in them. If we place an electric fan so it blows air across the top of an electric heater, this air absorbs some of the heat and carries it away from the heater. Thus we find heat can be transferred from point to point by various methods.

In refrigeration we call the medium used to transfer the heat, a **Refrigerant.**

A refrigerant is a liquid or gas that will readily absorb heat, carry it with it in motion, and give up this heat later when desired. These properties in liquids depend to a great extent on their boiling or evaporation temperatures.

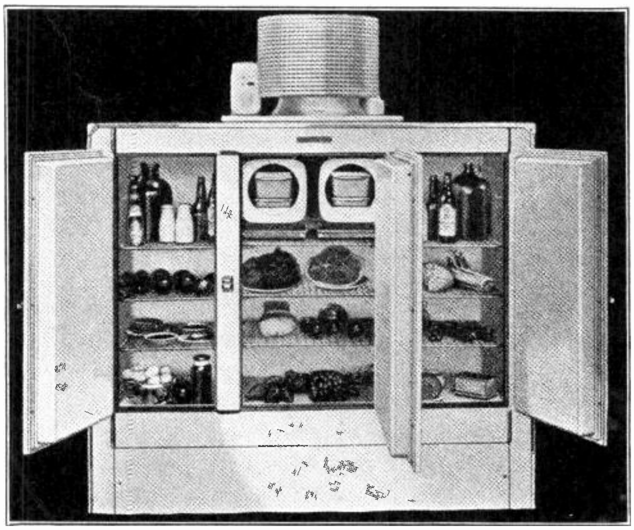

Fig. 253. A large sized electric refrigerator for use in the home. The arrangement of the refrigerating unit on the top of the cabinet provides maximum space for food storage.

Ordinary air can be used as a refrigerant, so let's use it for a simple illustration.

First try to answer these questions in your mind; why does a tire pump get hot when used to compress air? Why does a cylinder in which air has been stored under high pressure, get icy cold if the air is let out suddenly?

To answer these, let us first remember that all normal air or atmosphere, even that which feels cold to us, has a certain amount of natural heat in it. Then if we compress a large volume of this air into a very small space we concentrate its heat, thus raising the temperature of this smaller volume. Therefore, continued use of the tire pump to compress air soon heats the pump.

Another good example of the heat that can be produced by compressing air, is that Diesel engines use a highly compressed jet of air to ignite their fuel oil.

Now if we were to force a very large volume of air suddenly into a strong steel cylinder by means of a powerful compressor, the cylinder would get very hot; because, remember, we have concentrated the heat of the air, as well as the air itself.

If we close this air in the cylinder with a valve, the cylinder soon cools off by loss of its heat to the lower temperature atmosphere around it. After it has cooled the air inside it will be at the normal temperature of the surroundings. Now if we let 99 per cent of this air rush out of the cylinder quickly it will carry with it about 99 per cent of the heat which it still contains. This leaves the inside of the cylinder very cold, possibly many degrees below zero. So we see that air can be used to remove heat from a chamber, by a process of compression and expansion.

Air, however, is not an efficient refrigerant, as it requires too high pressures to accomplish refrigeration economically with it.

219. COMMON REFRIGERANTS

Some of the more common refrigerants in use are:

Sulphur Dioxide, Methyl Chloride, Carbon Dioxide, and **Ammonia.**

These materials when in liquid form will evaporate or boil at very low temperatures. Sulphur dioxide for example will boil at about 14 degrees F., at atmospheric pressure. You will note that this temperature is below the freezing point of water, and recall that water requires 212 degrees F., to boil.

At higher pressures sulphur dioxide will not boil at such low temperatures; for example, at 55 lbs. pressure it requires 90 degrees F. to make it boil. If it is placed under a vacuum it will boil at less than 14 degrees F. Sulphur dioxide is the most commonly used of all refrigerants for home type units. It is a dark brown liquid of a somewhat syrupy appearance, and has a very bad odor. This is considered an advantage as it is easy to detect leaks if they should occur in a refrigerator using it. The chemical symbol for sulphur dioxide is $S\,O_2$. Other reasons for its popularity as a refrigerant are that it is one of the safest and least harmful in its effects, if some should leak out; and it does not attack metals of the compressor and tubing as some other solutions do. In addition it has somewhat of a lubricating property, and, being a stable chemical, remains good indefinitely in use.

Ammonia is commonly used in large refrigerating and ice-making plants where operators are on hand to attend to the equipment.

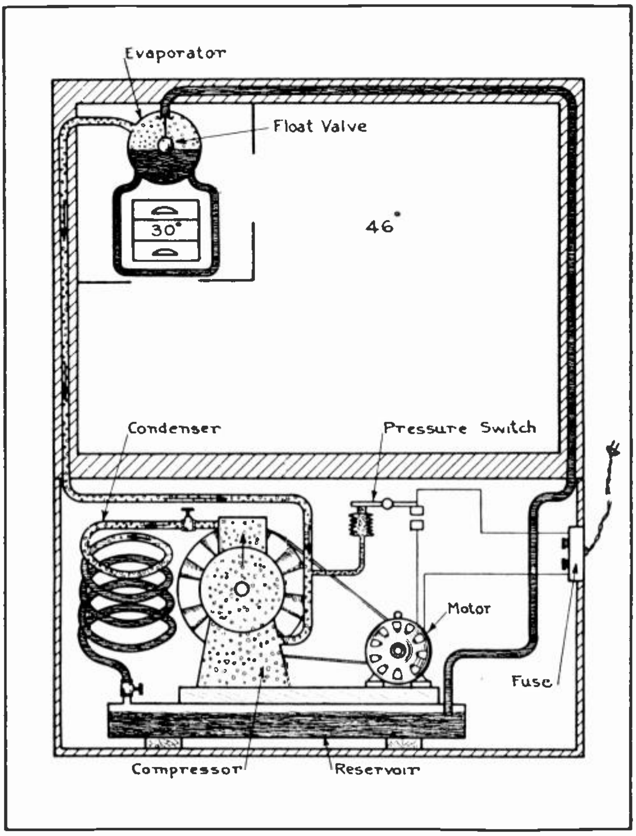

Fig. 254. This diagram shows the circulation of the refrigerating solution and also illustrates the general principles of the refrigeration cycle.

220. ABSORPTION OF HEAT BY EVAPORATION

We have learned that rapid expansion of gases creates a low temperature at the point at which they expand. The same thing is true of expansion of liquids due to evaporation. When refrigerant solutions boil or evaporate rapidly they absorb heat from the air in doing so. If we allow sulphur dioxide or some other refrigerant to expand in a chamber inside of an insulated refrigerator box and absorb some of the natural heat from the air in the box, and then pump this vapor outside, the box will be cooled and refrigeration is accomplished.

The box must be insulated with heat insulation, and have tight doors to keep heat from leaking in too rapidly from the outside air of higher temperature.

This is done by using thick walls filled with cork or other cellular or fibrous materials which do not readily conduct heat. The doors are equipped with air-tight sealing strips at their edges. As long as the doors of such a box are kept closed it does not require so much power to keep it cool.

221. REFRIGERATION CYCLE

After the refrigerant, by its expansion and evaporation into a gas, has absorbed heat from inside the box, this gas is compressed and condensed into liquid; then made to release its heat outside the box, and used over again in a repeated cycle. To drive the compressors electric motors are used, and for home type units they range from 1/6 to 1/4 or 1/2 h. p.

Now let us trace out the complete refrigeration Cycle of one of the more common units, which will cover the same general principles as used by most of the others.

Fig. 254 shows the important parts in the liquid circuit, which are as follows: **Compressor, Evaporator, Condenser, Reservoir,** and **Connecting Tubing.**

In the evaporator and its tubes we have liquid SO_2. As it absorbs heat from the air in the refrigerator the liquid evaporates or boils, creating sulphur dioxide gas. This gas flows under its own pressure, out through the left pipe toward the compressor. As long as the compressor is idle this gas cannot escape beyond it, and therefore, gradually builds up pressure as evaporation continues. Note that this gas pressure is also applied to the bellows or "sylphon" of the pressure switch. When the evaporation pressure builds up to about 5 lbs., the thin metal bellows expands enough to snap the switch closed, and start the motor which drives the compressor.

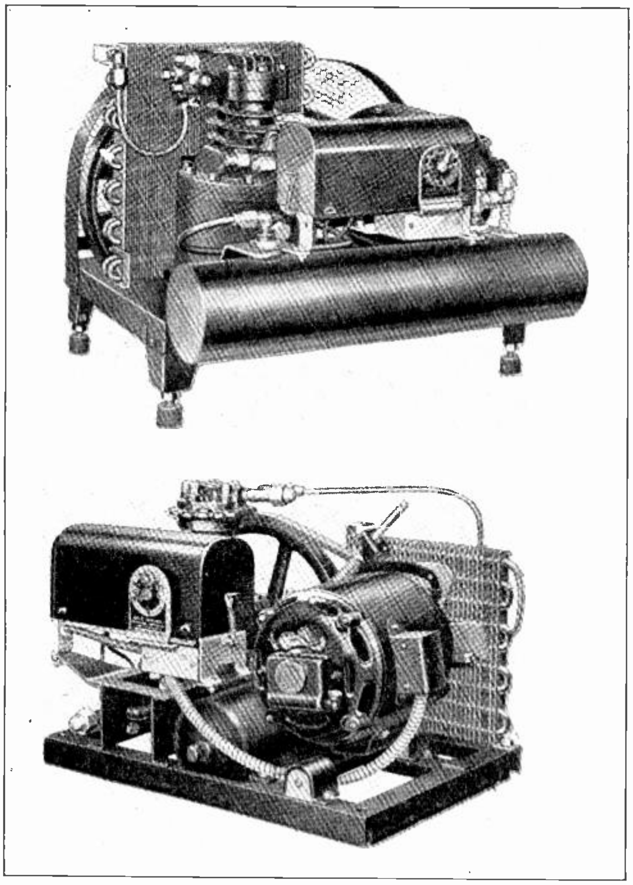

Fig. 255. Above are shown two complete refrigerator units including the compressor, motor, condenser, reservoir, and control box.

The running compressor sucks in the gas from the evaporator line and compresses it to about 55 lbs. pressure, forcing it into the coils of copper tubing called the condenser.

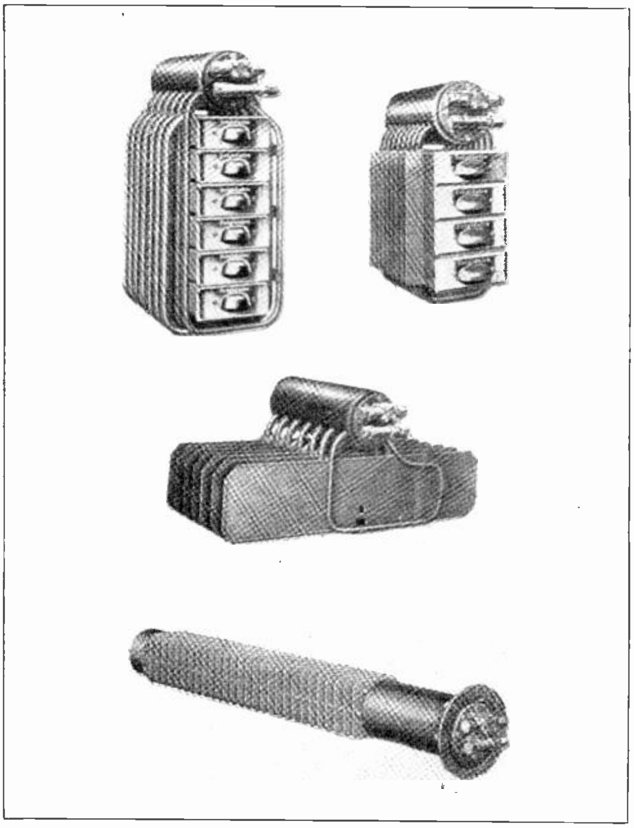

Fig. 256. Several types of evaporator units. Note the coils of tubing and metal fins which are used to aid in absorbing the heat from the air.

222. RELEASING HEAT BY COMPRESSION

When the gas is thus compressed, its temperature is raised to about 110 degrees, which causes it to give up its heat through the copper tubing to the outside air of lower temperature.

A set of fan blades on the driving wheel of the compressor forces air through the coils and assists in cooling them and carrying away the heat.

When the gas is thus chilled it condenses back into liquid and is forced on into the reservoir again in liquid state, but still under 55 lbs. pressure.

After the compressor has run long enough to reduce the gas pressure to about a 9" vacuum, or less than atmospheric pressure, this causes the sylphon bellows to collapse and open the switch, stopping the motor and compressor.

If the temperature in the refrigerator is still too high, the evaporator will soon build up enough gas pressure to start the compressor again, and the cycle is repeated as often as necessary to keep the desired temperature in the box. Fig. 255 shows two complete compressor units with their condensers and reservoirs. The pressure switches are in the boxes with the curved tops, and on the side of these boxes are convenient adjustment dials to control the temperature.

When the liquid level in the evaporator is lowered by evaporation, the float valve allows fresh liquid SO$_2$ to again enter from the reservoir line, where it has been held under pressure.

Ordinarily the liquid in the reservoir will not boil, as it requires about 90° to boil it at 55 lbs. pressure. This same feature acts as a safety control to prevent the evaporator from building up too high pressures if the motor and compressor should fail. When the gas builds up to 40 lbs. pressure, evaporation stops, unless the room and box temperatures are above 75° F. When the compressor reduces the gas pressure to the 9″ vacuum, the liquid SO$_2$, of course, boils easier and faster at this low pressure.

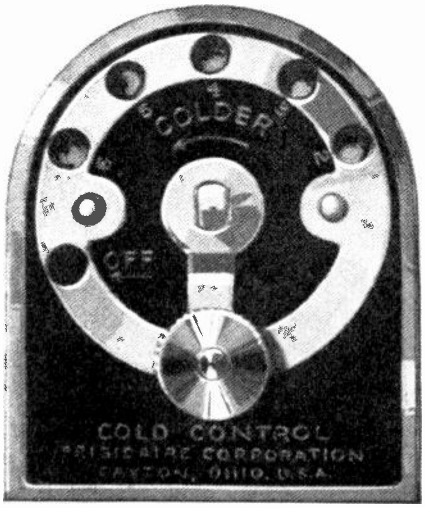

Fig. 256-A. This convenient form of temperature adjustment enables the housewife to easily control the temperature in the refrigerator, and to quickly freeze desserts when desired.

223. TEMPERATURE ADJUSTMENTS

The pressures at which the switch will operate to start and stop the motor, can be adjusted by screws on the switch lever and contacts, or by the convenient adjusting dials now used on some units. This regulates the temperature at which the refrigerator will be kept.

The coldest spot in the box is between the rows of tubes below the evaporator. In the trays located here we can freeze ice cubes, ice cream, or other desserts. Fig. 256 shows several types of evaporator units. The metal fins on some of them are made of copper or some metal that conducts heat well, to aid the liquid in the tubes in absorbing the heat from the air.

The compressor unit in this type refrigerator is hung in springs or set on rubber feet to reduce vibration, and should always be kept level.

A "cold control" or convenient adjusting device is provided on some of these units to enable the housewife to change the box temperatures for quick freezing or chilling of desserts.

Some refrigerators use thermostatic switches instead of varying gas pressures to start and stop the motor at given temperatures. Others use mercury switches as shown in Fig. 257. These consist of a small glass tube in which are sealed a pair of electrodes and a small quantity of mercury. The tube is mounted so it can be tilted by a pressure bellows or thermostat. When it tilts one way the electrodes are immersed in the mercury, closing the circuit. When the tube is tilted the opposite way the mercury runs to the other end of it and leaves the electrodes separated and the circuit open.

Many of the refrigerator units used for commercial installations, and some of those for homes, use water to cool the condenser coils. These must be connected to a water pipe so a little water can run through the coils continuously while the machine is operating. Fig. 258 shows a unit of this type.

224. REFRIGERATOR TROUBLES

If a refrigerator unit is properly installed, leaks in the piping very rarely occur. For detecting leaks of sulphur dioxide, ammonia is commonly used. Moving a small cloth or brush which is wet with ammonia, slowly along the pipe line will disclose a leak of SO$_2$ by creating a white smoke or steam when their vapors come together.

Occasionally a float valve will stick and prevent the machine from starting. Tapping the evaporator cylinder with the knuckles will often loosen it.

Blown fuses are probably one of the most common troubles, but they can easily be tested and replaced.

The switch should be kept properly adjusted and its contacts kept clean and bright.

Where D. C. motors are used they are generally of the compound type, and the small single phase A. C. motors are of the repulsion type. Larger units use three-phase A. C. motors. All of these motors will be explained in a later section.

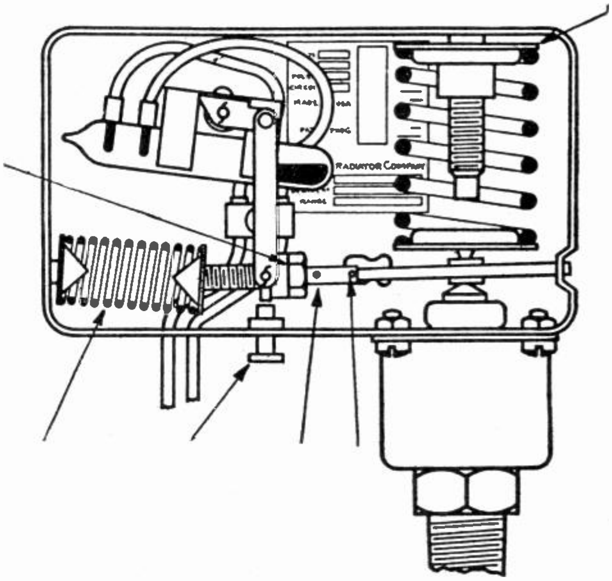

Fig. 257. This diagram shows the use and operation of a mercury switch for controlling a refrigerator motor.

Refrigerator motors should be kept well oiled, and their commutators and brushes kept in good condition.

Fig. 259 shows two compressor units for larger refrigerators.

One of the leading makes of refrigerators has its compressor and motor entirely enclosed and actually immersed in the refrigerant solution in the evaporator and reservoir unit, which are all mounted compactly on top of the box. Such a unit is shown in Fig. 253. This type has the advantage of being very silent in operation, and the working parts are guaranteed for a very satisfactory period.

225. USE OF BRINE SOLUTIONS

Some refrigerators use a brine solution around their coils, to transfer the heat from larger areas to them, and to act as a sort of "cold reservoir". The large ice plants use a brine solution to carry the heat from the freezing vats to the absorption and compressor units. But, in general, the same fundamental principles apply to all of them, and if you well understand these points just covered you should be able to easily obtain an understanding of almost any type you may encounter.

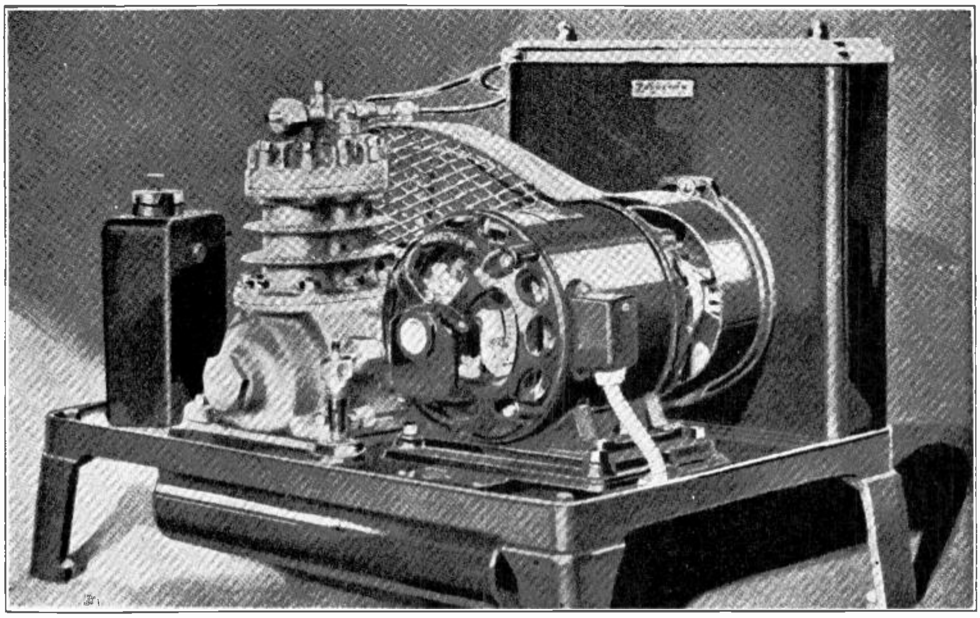

Fig. 258. The above view shows a refrigerator unit of the type which uses running water for cooling the condenser. The condenser coils are enclosed in the case at the rear right corner.

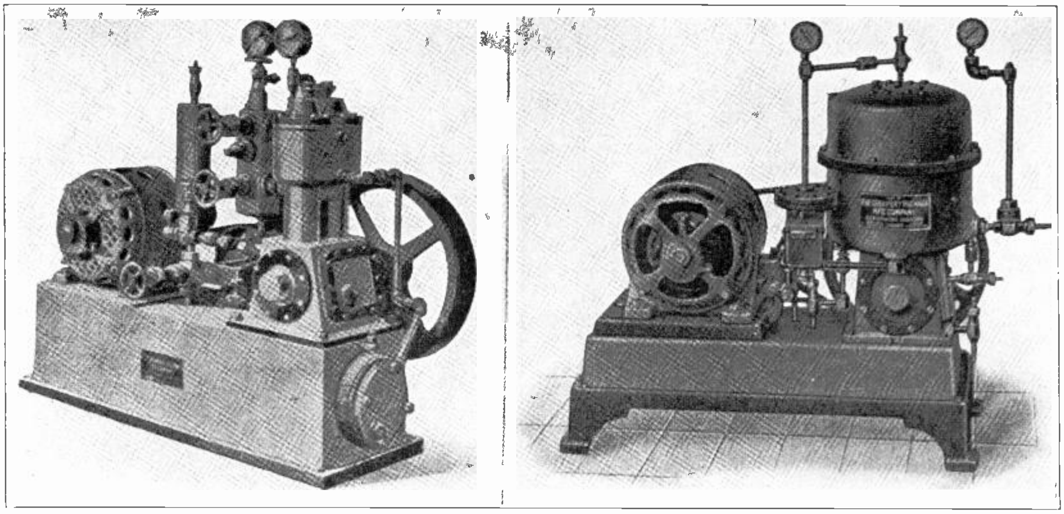

Fig. 259. Two refrigerator units of the large size for use in commercial establishments such as meat markets, soda fountains, etc.

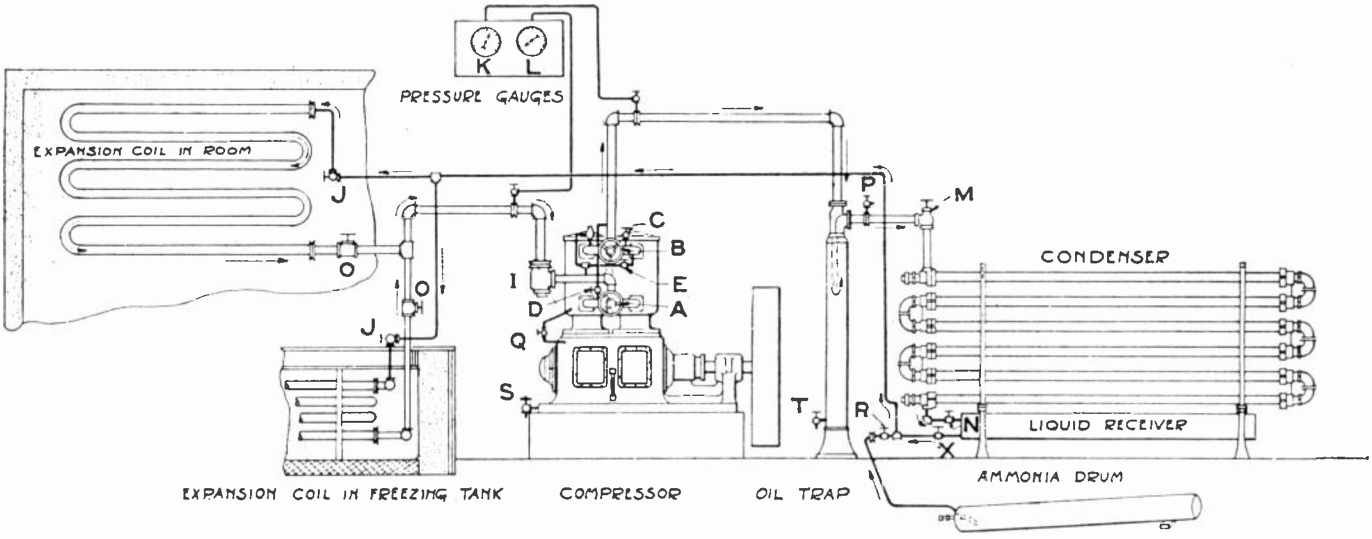

Fig. 260. This diagram shows the arrangement of a large refrigerating system such as used in packing plants and cold storage houses. These plants use ammonia as the refrigerant. Ammonia flows through the pipe shown by the small solid line, and as shown by the arrows, to the expansion valve "J." Here it is allowed to expand through the large coil and absorb heat from the room to be cooled, at the upper left. A branch is also taken to the expansion coil in the freezing tank at the lower left. This coil could absorb the heat from a brine solution, and freeze ice cakes or water in tanks immersed in this brine. The compressor then draws the expanded gas from both of these coils and compresses the gas to concentrate its heat and raise its temperature, and then forces it into the condenser coils shown at the right. In a plant of this type cool water is run over the condenser coils to chill the gas back into a liquid, and carry away the heat from it.

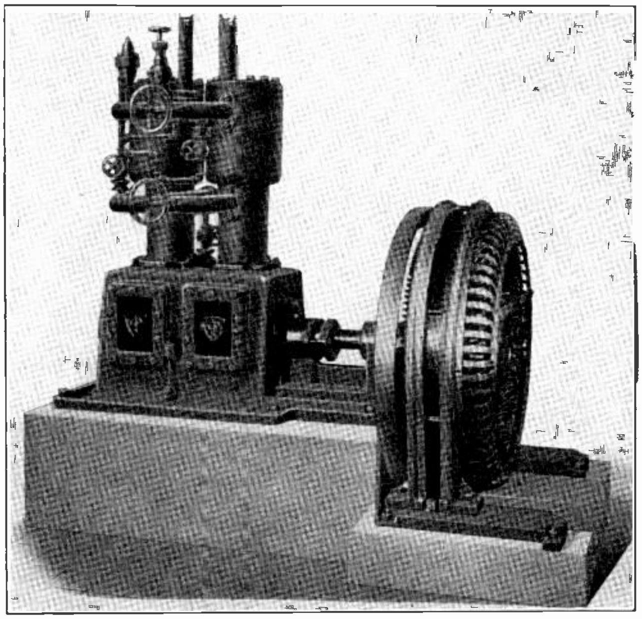

Fig. 261. This view shows one of the large types of compressors used for refrigeration and driven by a powerful electric motor. Some large refrigerating plants and ice plants use dozens of motors of this type, and often of several hundred horse-power each.

COYNE
Electrical School
CHICAGO ~ ~ ILLINOIS
ESTABLISHED 1899

ARMATURE WINDING AND TESTING

Section One

Direct Current Armatures
D. C. Motor and Generator Principles
Magnet Wires, Insulations, Coil Winding
Lap Windings, Wave Windings
Element Windings, Multiplex Windings
Rewinding Old Armatures
Armature Testing
Emergency Repairs

ARMATURE WINDING AND TESTING

Section One

D. C. ARMATURES

This section covers one of the most interesting and important branches of practical electricity. There are many thousands of new motors and generators built each year which must be wound and tested by experts at the factories. There are also many millions of electric motors in use in this country which have to be maintained, tested, operated, and occasionally completely rewound.

Power companies have expert armature winders to repair their great generators when their windings develop trouble. Industrial plants and factories, some of which have thousands of motors in one plant, require armature winders to repair the motors that burn out. Then there are the small companies which have only a few motors and don't have their own electrician, so they must send their machines to some armature shop for repairs. Many of our graduates operate a very profitable business of their own in armature winding and motor repair.

Numerous smaller factories that do not keep a regular armature winder, much prefer to have a maintenance electrician who can wind armatures when necessary. So in many cases we find that the general electrician, who does the wiring and repairing around the plant, is also called upon to test and rewind armatures in emergencies. So a thorough knowledge of this subject will often enable you to land a good job easier, and to advance into greater responsibility and pay than you could without it.

Fig. 1 shows a large group of motors for overhauling and rewinding in a modern repair shop, and Fig. 2 shows a section of the winding department in this same shop.

We have mentioned armature testing, as well as winding, and wish to emphasize the importance of getting a good knowledge of testing and trouble shooting, to be able to locate troubles and faults in the windings of motors and generators.

Fig. 1. This photo shows a view in a modern electric repair shop. Note the great number and variety of electrical motors and generators which go through this shop by the thousands each year. They are tested, rewound, reinsulated, and generally repaired before going back in service.

In many cases some small fault, such as an open circuit, short circuit, or "ground", right at the leads or connections of an armature winding, will seriously interfere with the operation of the machine. Many times such faults that don't require a complete rewinding can be quickly repaired, and the machine put right back in service with very little lost time.

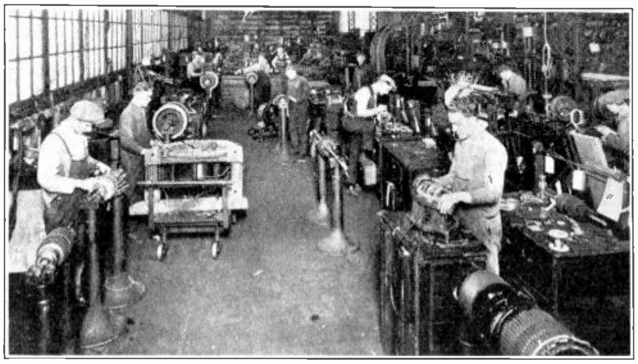

Fig. 2. This view shows a section of the Armature Winding Department of the same shop shown in Fig. 1.

There are actually thousands of electricians in the field today who do not know how to locate and repair such faults, and instead must take motors out of service and send them out to be repaired. In many cases windings are pulled apart unnecessarily to find troubles that could have been easily located by a test, without even removing the armature from the machine. It is needless to say that the maintenance electrician who knows how to systematically test for and locate these troubles, and can make quick repairs and put a machine back in service with the least delay, is the man who gets the best jobs and the best pay.

A good knowledge of armature construction and windings not only makes it easier to understand testing and rewinding, but is also a great help to you in thoroughly understanding the motors and generators covered in the later sections. So make a careful and thorough study of this section, and you will find it very interesting and valuable.

1. GENERATORS AND MOTORS

In order to properly understand armature winding it is necessary to first know something of the construction and principles of motors and generators, and the function of the armature in these machines.

An electric generator is a machine used to convert mechanical energy into electric energy.

An electric motor is a machine used to convert electric energy into mechanical energy.

In actual construction these two machines are practically the same, the difference in them being merely in the way they are used. In fact, in many cases a generator can be used for a motor, or a motor used as a generator, with very slight changes and adjustments.

The more important parts of a D.C. motor or generator are the **Frame, Field Poles, Armature** and **Commutator.** In addition to these, the brushes, bearings, and a number of other small parts are needed to complete the machine.

Fig. 3 shows a machine with the front bearing plate removed. The field poles can be seen at "B", and are securely attached to the inside of the frame. The armature is shown resting inside the field poles, where it is rotated during operation. The commutator can be seen on the front end of the armature. The extra poles shown at "A" in this view will be explained later.

2. FIELD POLES

The field poles are made of iron, either in the form of solid cast blocks or in many cases built up of thin strips or **Laminations,** pressed and bolted tightly together. These iron cores are then wound with a great many turns of insulated wire, forming what are called **Field Coils.** These coils may consist of from a few hundred to several thousand turns, according to the size and voltage of the machine. We find then that the completed field pole is simply a large electro-magnet, and its purpose is to supply a strong flux or field of magnetic lines of force for the armature conductors to rotate in.

The field frame is not only to provide a support for the field poles, but also provides a flux path for the complete magnetic circuit between the outer ends of the poles. The field coils are connected together in such a manner that each one will produce a magnetic pole opposite to the one next to it. They are then supplied with direct current to maintain constant polarity at the pole **Shoes** or **Faces.**

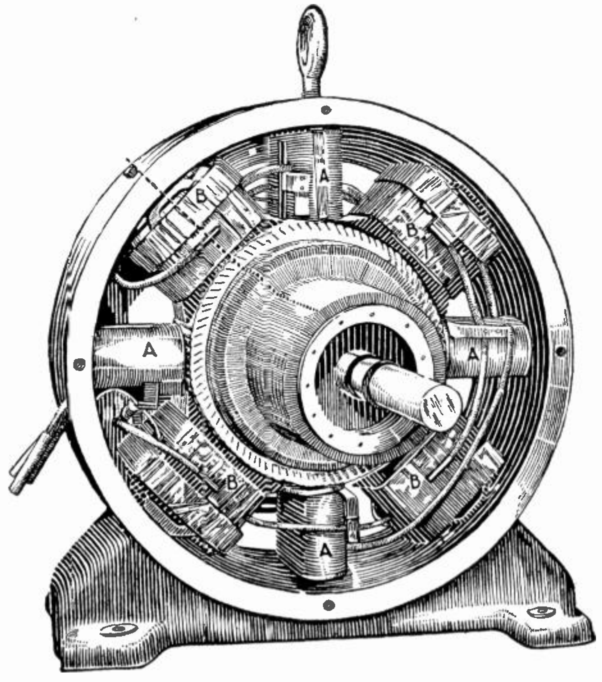

Fig. 3. This view of a D.C. generator with the front bearing bracket removed shows the field poles, armature, and frame very clearly.

3. ARMATURES

The armature is also made of iron and is always of laminated construction, or built up of thin sheets pressed tightly together. The laminated construction is used to prevent the flow of induced **Eddy Currents** in the armature core. The core has a number of slots around its entire outer surface, in which the armature coils are mounted. The iron armature core provides a magnetic path for the flux of the field poles, and also carries the coils which are rotated at high speed through the field flux.

In a generator, it is the cutting of these coils through the flux which produces the voltage. In a motor, it is the reaction between the flux around the armature conductors and the field flux, which causes the **Torque** or turning effort.

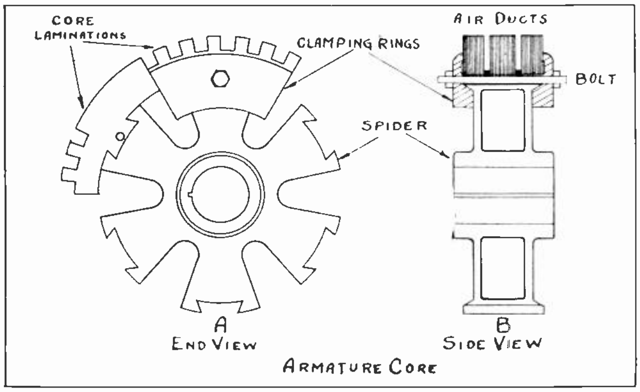

Fig. 4. The view at "A" shows the manner in which core laminations are assembled on a spider to make up the large armatures. At the right is a sectional view, showing the manner in which the laminations are assembled and clamped to the spider rim, and the air ducts which are left for ventilation and cooling.

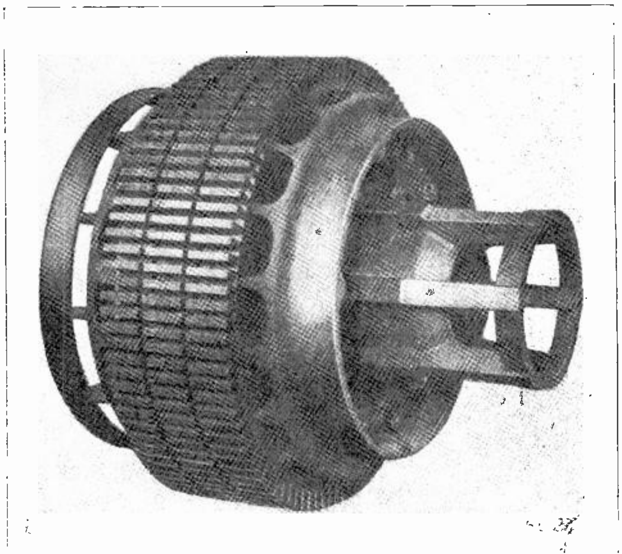

Fig. 5. Completely assembled D.C. armature. Note the manner in which the laminations are clamped together by the heavy end rings, and also note the slots around the armature core in which the coils will be laid.

Small armatures are often constructed of laminations in the form of complete disks which merely have a hole through their center for the shaft, and possibly bolt holes for clamping them. This makes a core which is solid clear to the shaft. In the larger machines it is not necessary to have the entire core solid, so the laminations are assembled like the rim of a wheel, on the outside ends of short spokes, as shown in Fig. 4-A. This wheel or center framework is called the **Spider**, and the sections of core laminations are dovetailed into the spider, as shown in the figure. Heavy clamping rings at each end of the group, and drawn tight by bolts, hold the entire core in a solid, rigid unit.

Fig. 4-B shows a sectional view through such a spider and core. Note the spaces or air ducts that are left between the laminations, for ventilation and cooling of the core and windings.

Fig. 5 shows a completely assembled core of this type without the shaft or the commutator.

Fig. 6 shows a complete armature with the winding in place and the commutator shown at the left end. Note how the coils are neatly fitted into the slots and held in place by wedges in the top of the slots. The ends of the coils are tightly banded with steel banding wire to prevent them from being thrown outward when rotated at high speed.

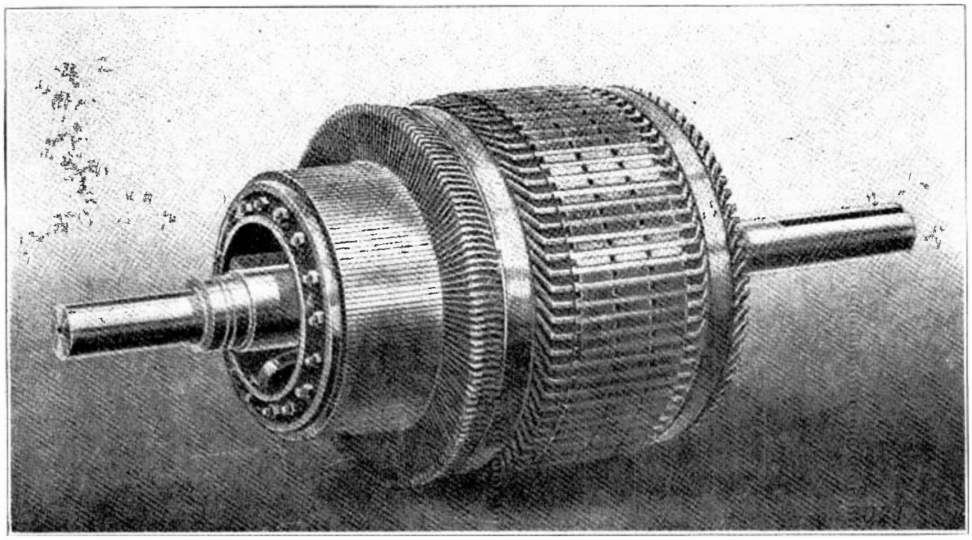

Fig. 6. The view at the left is a photo of a large D.C. armature for a 150 KW, belt driven generator. The commutator is at the left and the bars or segments can be plainly seen. Note how the armature coils are held in the slots by wedges and the band wires around each end of the armature. (Photo Courtesy Crocker-Wheeler Electric Company.)

4. ARMATURE SLOTS

There are several different types or shapes of slots used for holding the coils in armature cores. Several of these are shown in Fig. 7. This figure shows end views of the slots and sectional views of the coils in them. The one at "A" is called an "open type slot", and is used where the coils are completely wound and formed before being placed in the slots. This type of slot has the advantage of being very easy to place the coils in. Bands around the core must be used to hold the coils in slots of this shape when the armature is rotated.

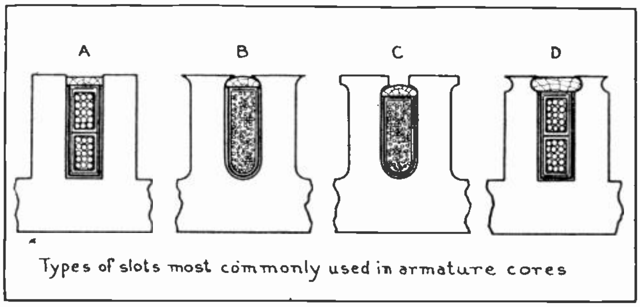

Fig. 7. The above diagram shows four common types of armature slots. Note carefully the manner in which the coils are arranged and insulated, and also the wedges which hold them in the slots. The wedge in the slot at "A" would be held in place by band wires around the armature.

"B" and "C" show slightly different types of partly closed slots, which are used with armatures on which the coils are wound directly into them. This type of slot gives a better distribution of flux from the field poles to the armature than the open ones do. This is due to the projecting lips which reduce the broad air gap over the top of the slot. With these partly closed slots the coils are held securely in place by wedges slipped over their top edges and under the iron lips.

"D" shows an open type slot which has a groove in each side of its top, through which the slot wedge is driven.

5. COMMUTATORS

Commutators are constructed of a number of segments or copper bars, mounted in the form of a cylinder around the shaft. They are mounted near to the end of the armature core, so the coil ends can be connected to each of these bars. Between each bar and the next is placed a thin mica strip or segment, which keeps them entirely insulated from each other.

See Fig. 8-A, which is an end view of such a commutator. B— and B+ are the brushes which rest on the commutator surface F. "R" is the clamping nut, and at "U" are shown slots in the segments where the coil leads are attached. The black lines at "M" are mica insulating strips.

At "B" is shown a sectional view cut endwise through a commutator, showing the shape of the bars or segments and the notches cut in each end, so they can be held securely together by the heavy **Clamping Rings.** When the bars are all fitted in place by the clamping ring "V" is drawn up tightly by the clamping nut "R", this locks the segments to the commutator core or center, in a sort of dovetail construction. The raised part of the segment at "L" is called the **Riser** or **Neck.**

The heavy black lines represent mica insulation which keeps all bars well insulated from the clamping rings, core, and shaft. Examine this diagram carefully as it shows the typical construction features of small and medium sized commutators.

On very large machines where the commutators have a large diameter, they are sometimes mounted on a spider similar to those described for large armatures. Commutators are held in place on the shaft by use of keys and slots, or special locknuts, in each end.

On some of the very small armatures of fractional horsepower machines, the commutators are tightly pressed on to the shaft, and held in place by the extremely tight fit.

Fig. 9 shows a large engine-driven D.C. generator from the commutator end. This commutator is mounted on a spider and you can note the brushes resting on its outer surface. Part of the field poles can also be seen around the left side of the frame.

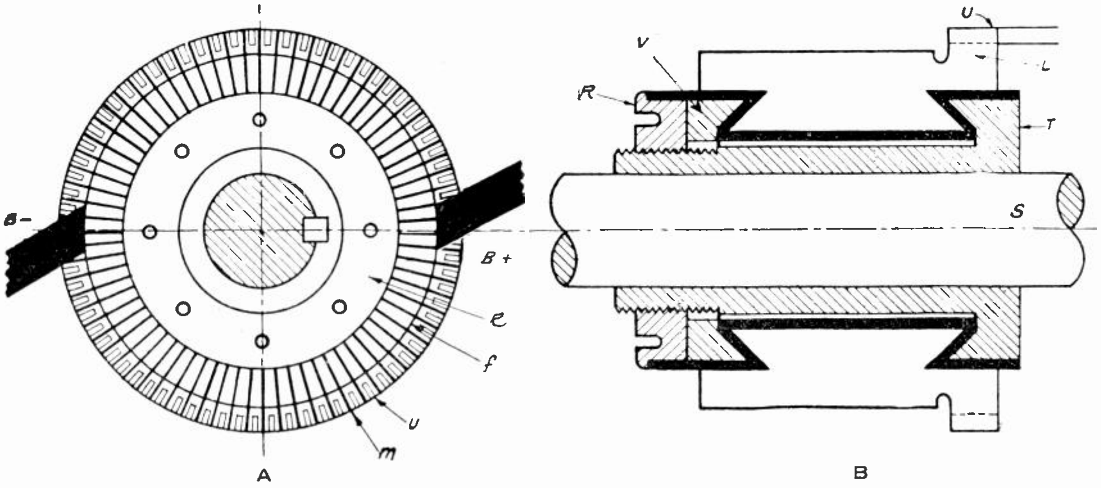

Fig. 8. At "A" is shown an end view of a commutator, illustrating the manner in which the bars or segments are assembled and kept separated by strips of insulation between them. At "B" is a sectional view showing how the commutator segments are clamped and held in place by clamping rings which fit in their grooves.

Machines of this type are made in sizes ranging from less than 100 horsepower to many thousands of horsepower, and small motors are made in sizes down to ¼ horsepower and less.

Keep in mind, however, that regardless of the size of the machine the general operating principles are the same; so if you obtain a thorough understanding of the purpose of the important parts and the fundamental operating principles of one type or size, these things will apply equally well to all others.

6. OPERATING PRINCIPLES OF GENERATORS AND MOTORS

So far we have only discussed the mechanical parts and construction of generators and motors. It is also very important that you have a good understanding of the electrical features and operating principles of these machines, for two reasons. It will help you understand armature windings much easier, and also provide a foundation for your study of these machines in the later sections.

The operating principles of generators and motors are not nearly as complicated, when properly explained, as many men without training think they are.

7. GENERATION OF VOLTAGE

We have learned that a generator is a machine which when driven by mechanical power will generate voltage or electro motive force, and supply electric energy to the circuit or load to which it may be connected.

You will also recall from the section on elementary electricity that a generator operates on the principle of magnetic induction, and that the voltage is produced by the wires or conductors cutting magnetic lines of force.

Fig. 10 shows a diagram of a very simple form of D.C. generator, consisting of two field poles marked "N" and "S", and one armature coil connected to two commutator segments, which are in contact with the positive and negative brushes. These brushes are to collect the current from the commutator bars as the coil and the commutator revolve on the armature. If we revolve the coil rapidly through the magnetic flux between the north and south poles, a voltage will be generated in the coil; and if there is a complete external circuit through the lamps or load as shown, this voltage will cause current to flow out through this circuit and back through the armature coil continuously, as long as the rotation continues and the circuit remains closed. As the coil revolves, either side of it passes first the north pole and then the south pole, and cuts through the lines of force first in one direction and then the other. Therefore, the

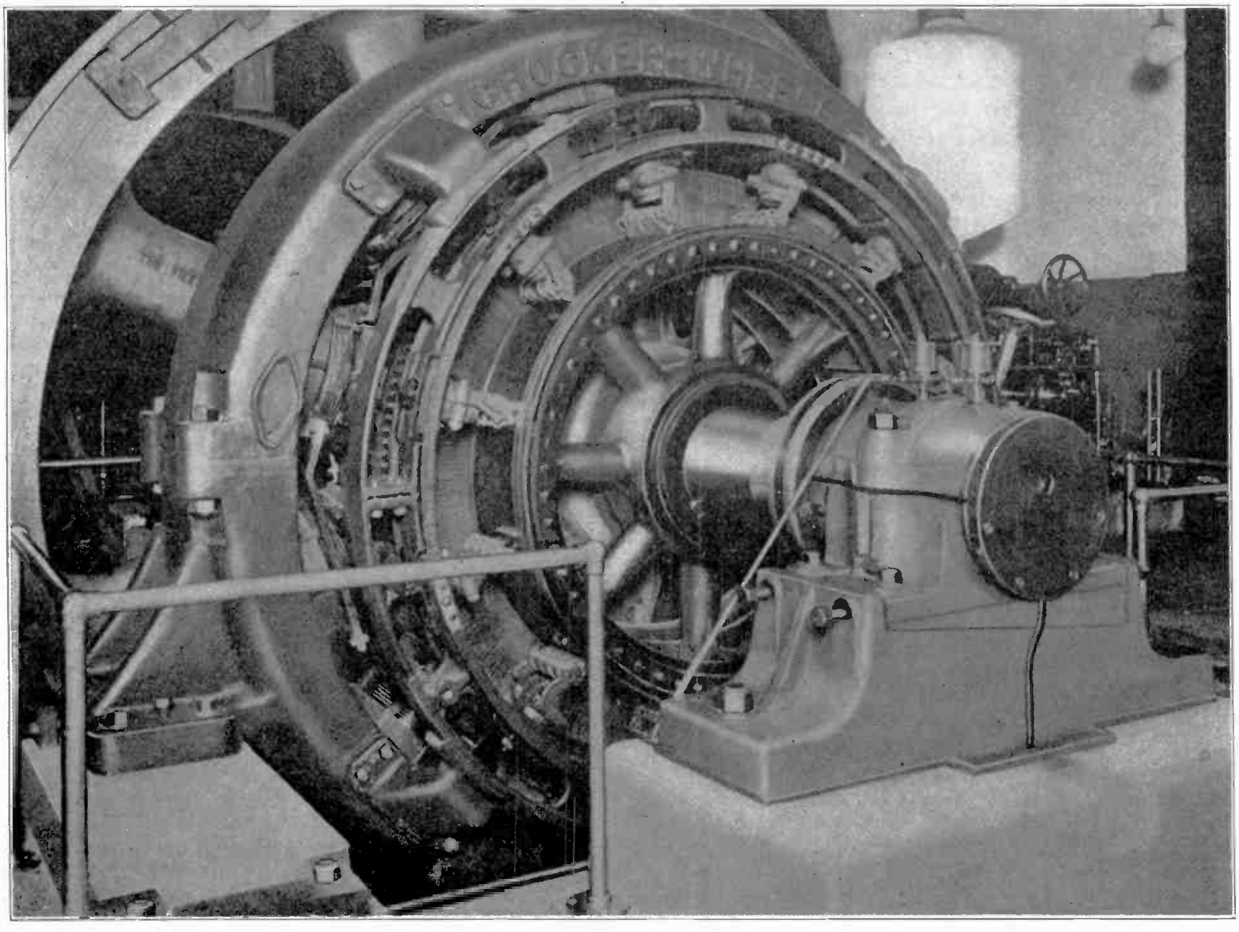

Fig. 9. This photo shows a large 400 KW. 225 volt D.C. generator which is direct connected to a steam engine. This machine is designed to run at 110 R.P.M. and, therefore, it has a larger diameter than those which operate at higher speeds. This generator has 12 field poles and 12 sets of brushes. (Photo Courtesy Crocker-Wheeler Electric Company.)

voltage generated in the coil will be continually reversing or alternating in direction.

If this coil was provided with collector rings instead of commutator bars the entire circuit would be supplied with alternating current. Always remember that **alternating current is generated in the windings of any ordinary D.C. generator.**

8. COMMUTATOR ACTION

Now we come to the purpose of the commutator, which is to rectify this alternating current or change it to direct current, as it flows out to the external circuit. This is accomplished in the following manner.

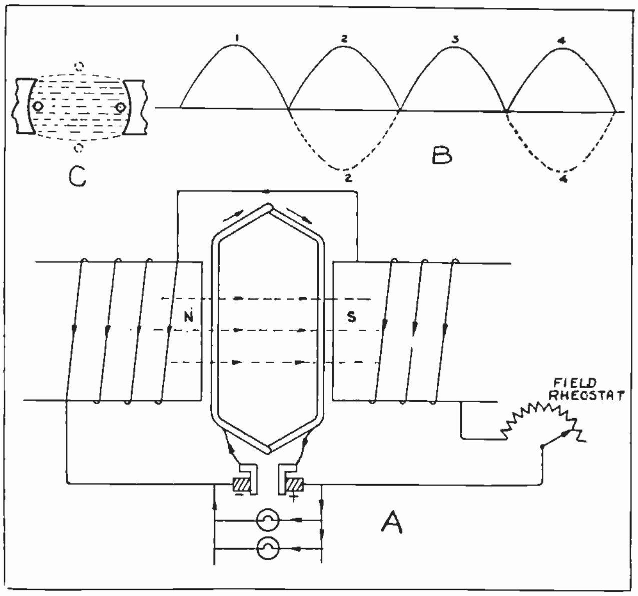

Fig. 10. The above diagram shows the principles of a simple D.C. generator. Note the manner in which the field coils are connected to the brushes, and the rheostat used for controlling the amount of field current.

The field poles and brushes are, of course, held rigidly in one position and always keep about the same position with regard to each other. Thus the positive brush will always be at the right place to collect current from the coil side which is passing by the south pole, and the negative brush will always be at the proper position to connect with coil sides passing the north pole. So the current will always flow out at the positive brush and back in at the negative brush, regardless of the speed of the armature.

9. VOLTAGE CURVES. PULSATING DIRECT CURRENT

We learned in a previous section that the voltage or current of any circuit can be conveniently represented by curves, as shown at "B" in Fig. 10. These curves show the variation and direction of the voltage that would be produced by this simple generator.

The combined solid and dotted line curves 1, 2, 3, and 4, represent the alternating impulses that are produced in the armature coil. Curves 1 and 3 above the line indicate voltage in one direction, while 2 and 4 below the line indicate voltage in the opposite direction. The distance, from the center line, at any point along these curves, indicates the value of the generated voltage at that particular point of the coil revolution.

The rise and fall of the curves is due to the coil approaching and leaving the strong field flux directly under the poles. When the conductors of the coil are in the position shown by the dotted circles at "C", and are practically out of the effective field and moving parallel to the few lines of force, they do not generate any voltage. This position between two field poles is called the **Neutral Plane.** As the coil rotates back into the stronger field of the poles, the voltage gradually builds up higher until it reaches a maximum when the conductors are in the strong field at the center of the poles, as shown by the solid line circles. If we ignore the dotted curves 2 and 4 below the line at "B", and consider them to be placed above the line, the curves will then represent the pulsating direct current which exists in the external circuit due to the action of the commutator.

Large generators are never constructed with only one coil on the armature, but usually have a considerable number of coils placed in the slots around the armature surface, and connected to as many commutator segments. The use of this greater number of coils produces impulses closely following each other, and in fact overlapping, so that the variation or pulsation of current, as shown in Fig. 10-B, is considerably reduced.

Fig. 11-A, B, and C shows the voltage curves for three simple generators, each with a different number of coils on its armature. The one shown at "A" has two coils placed 90 degrees apart. One of these coils will be passing through dense flux directly under the center of the poles, while the other coil is at right angles to the poles and moving parallel to the flux. Therefore, the voltage induced in one coil will be at maximum value, while that in the other is at zero value. The result is shown by the curves, and we can see that the current flow in the external circuit will be much steadier. By comparing this with the number of coils in "B" and "C", and also observing the curves representing their voltage, we find that the greater number of coils we use the less pulsation there will be in the current flowing to the external circuit, and the closer it approaches to true direct current. The curves shown in this figure are not of the exact shape that would be produced by such a generator, but will serve to illustrate the effect of greater numbers of coils in a generator armature.

10. FACTORS THAT DETERMINE MACHINE VOLTAGE

We may recall that in an earlier section on magnetic induction we learned that **a single conductor must cut 100,000,000 lines of force per second to generate one volt,** and that **the voltage produced by any generator depends on the speed with which lines of force are cut.**

This, in turn, depends on three principle factors as follows—strength of the field or number of lines of force per pole, speed of armature rotation, and number of turns in series between the brushes.

We can readily see that the stronger the field, the more lines of force will be cut per revolution of the coil. If we strengthen or weaken the field of any generator its voltage will increase or decrease proportionately. The voltage of generators while in operation is usually controlled by varying their field strength.

The faster an armature turns, in revolutions per minute, the greater will be the speed of movement of its conductors and the greater the number of lines of force cut per second. So we find that the voltage of a generator will also vary directly with the speed.

If a simple generator, such as shown in Fig. 10, has one volt produced in each side of its coil, then the pressure at the brushes will be 2 volts; because the two sides of the coil are in series, and their voltage adds together. If we were to increase the number of turns in this coil from one to ten, the pressure at the brushes would be 20 volts, because all ten turns would be in series and their voltages would add. So we find that the number of turns per coil in an armature winding will regulate the voltage produced.

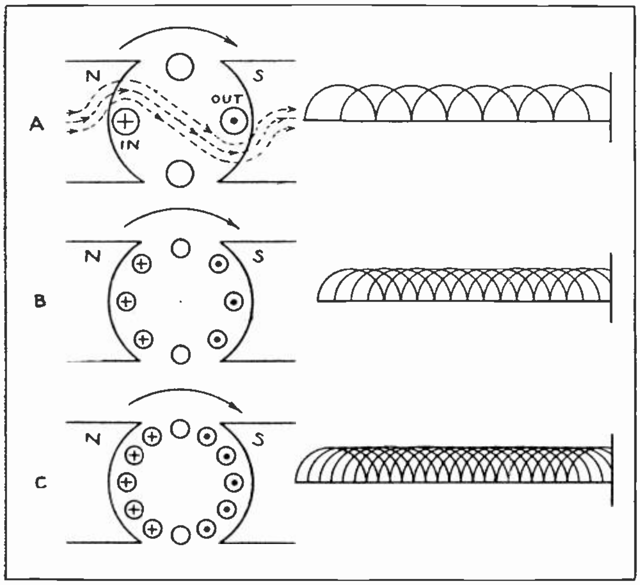

Fig. 11. The above diagram shows the voltage curves for three simple generators with different numbers of conductors in their armatures. Note how the greater number of conductors produces direct current of a more constant value.

11. ARMATURE FLUX AND ITS ACTION IN GENERATORS

When a generator is connected to an external circuit on which we have a load of lamps or motors, the amount of connected load and the resistance of the external circuit will determine the current which flows. This current, of course, must all flow through the armature winding continuously, and it sets up magnetic lines of force around the armature conductors, as shown in the upper view in Fig. 12. The reaction between this flux and that of the field poles causes the field flux to be distorted or pushed out of its straight path as shown.

When the magnetic lines from the north field pole strike the counter-clockwise lines around the left armature conductor, they deflect downward, and travel with them to a certain extent. Then as they encounter the clockwise lines around the right hand conductor they are deflected upwards.

These lines, of course, have a tendency to try to straighten or shorten their path, and thereby exert considerable force against the movement of the armature conductors, and in opposition to the force applied by the prime mover which drives the generator.

This force will, of course, depend upon the amount of current flowing in the armature conductors and the strength of the flux which they set up. For this reason the greater load we have connected to the external circuit, the more power will be required from the prime mover, to drive the generator.

12. MOTOR PRINCIPLES

If we take this same machine which has been used as a generator, and send current through its armature and field coils from a line and some other source of electric supply, the reaction between the lines of force of the field and those of the armature conductors will set up **Torque** or twisting effort to rotate the armature, as shown in the lower view in Fig. 12.

You will note that, in order to obtain rotation of the motor in the same direction the armature formerly turned as a generator, we must reverse the current through the armature coils. Use the right hand rule for magnetic flux around a conductor, and check carefully the direction of the flux set up, with the direction of current flow through these conductors. The current is flowing in at the conductor nearest the north pole, and, therefore, sets up a clockwise flux around this conductor. In the other conductor the current is flowing out and sets up a counter-clockwise flux. The lines of force of the field coming from the north pole in striking those around the left conductor will be deflected upwards over the top of this conductor, and as they continue across and strike the lines in the opposite direction on the right hand conductor, they will be deflected downward and under it. Their tendency to turn and straighten their path will then cause this force or torque to rotate the armature counter-clockwise. With a pulley or gear connected to the shaft of such a motor we can thus derive mechanical power from electric energy.

13. COUNTER E. M. F. IN MOTORS

We must remember that as the motor rotates its armature conductors will still be cutting lines of force of the field. As the conductors of the motor in Fig. 10 are revolving in the same direction they did in the generator, this voltage induced in the

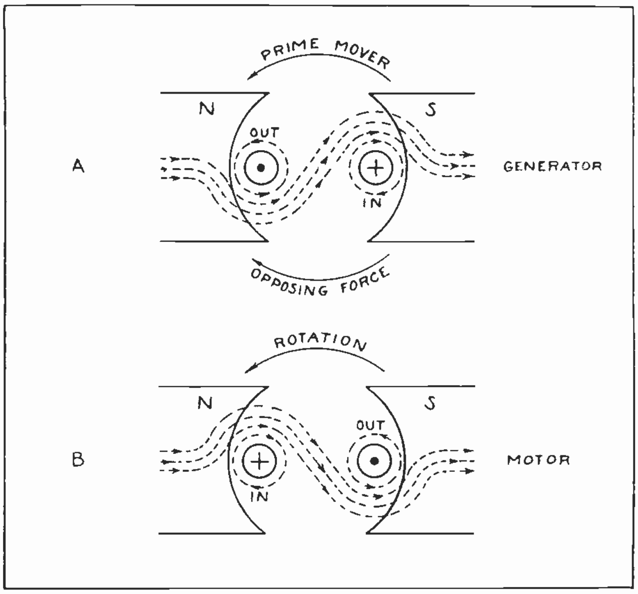

Fig. 12. This sketch shows the manner in which motor torque is produced by the reaction between the flux of the armature conductors and the field flux. Examine both "A" and "B" very carefully, and check the direction of current in the conductors, the direction of flux around them, and the direction of the resulting movement.

coils will be in the opposite direction to the applied line voltage. This voltage, which is always generated in the coils of any motor during operation, is therefore called **Counter Electro-Motive Force,** and usually referred to as counter E. M. F., or counter voltage.

The applied voltage is equal to the counter E.M.F. plus the voltage drop in the armature or, E = C. E.M.F. + I. R.

As the counter voltage opposes the applied line voltage it regulates the amount of current the line will send through the armature. The resistance of the armature winding is very low, being only about ¼ of an ohm in the ordinary 5 horsepower, 110 volt motor. From this we can see that if it were not for the counter voltage an enormous current would flow through this armature.

Applying Ohms law, or E ÷ R = I, we find that 110 ÷ ¼ = 440 amperes. Actually a motor of this size would ordinarily draw only about 10 amperes when operating without mechanical load; so we can see to what a large extent the current must be controlled by the counter voltage.

This counter voltage can be determined in the following manner. We know that I × R = E, so 10 × ¼ = 2½ volts, or the voltage required to force 10 amperes through the armature resistance. If we subtract this from the applied voltage we find the counter voltage, or 110 — 2½ = 107½ volts, counter E. M. F.

14. GOVERNOR EFFECT OF COUNTER E. M. F.

When a load is applied to a motor it tends to slow down a little, and as the conductors then cut through the field flux at less speed, the generated counter E. M. F. will be less, and will allow the applied voltage to send a little more current through the armature. This additional current increases the motor torque and enables it to carry the increased mechanical load. If the mechanical load is entirely removed from a motor it will tend to speed up, and as the speed increases the armature conductors move through the field flux faster. This increases the counter E. M. F. which will immediately reduce the current flow, by its opposition to the applied line voltage. So we find that **The Counter E. M. F. of a Motor Armature Acts Like a Governor to Control Its Speed.**

We should also remember that if a motor is loaded to a point where the armature slows down too much, or stops entirely, the counter voltage will fall too low and allow the applied voltage to send excessive current through the armature and possibly burn out its windings. The counter voltage in a motor armature, of course, depends upon the number of turns in the coils, the speed of rotation, and the field strength, the same as the voltage in a generator does.

Counter voltage plays a very important part in the starting of motors, and will be further discussed in the section on D.C. motors; but be sure you have a thorough understanding of its principles as covered in this section.

15. ARMATURE COILS

Armature windings merely consist of a number of coils of wire, arranged uniformly in the slots of the armature core, and connected to the commutator bars to form series or parallel circuits between the brushes. Many untrained electricians think armature windings are very complicated. This is not necessarily true. The windings are the heart of the machine, and its operation depends on them, but there is nothing so mysterious or complicated about these windings that a trained man cannot easily understand.

The Important Things to Know Are the Manner of Constructing the Coils, Insulating Them, Placing Them in the Slots, and **Making the Connections to the Commutator.**

These things are all very easy to learn, for one who already knows the principles of electricity and series and parallel circuits.

We are now ready to take up coil construction and insulation, and the connections will be explained a little later.

16. NUMBER OF TURNS AND SIZE OF WIRE

We have found that the number of turns in the coils of a generator winding has a definite effect on the voltage it will produce; and that in a motor the number of turns regulates the counter voltage, and thereby determines the line voltage which can be applied to the motor.

The size of the conductors has no effect on the voltage of these machines, but does determine the current their windings can carry. The larger the conductors or the more of them which are connected in parallel, the more current the windings can stand without overheating. It is this conductor area that determines the current capacity of generators, or the full load current ratings of motors. So in general, high voltage machines use more turns of smaller sized wire and more coils connected in series; while low voltage, heavier current capacity machines, use fewer turns of larger wire.

The shape of wires used for armature coils depends on the kind of machine and the shape of the slots. Round wires are most commonly used for small armatures, except those for the starting motors of automobiles and such very low voltage machines. These are usually wound with one or two turns of square or rectangular wires or bars.

Windings for large size motors and generators generally use square or rectangular conductors in order to utilize all the space in the slots.

17. WIRE INSULATION

Armature coils of more than one turn must have all turns well insulated from each other. Round magnet wire, and also the smaller square wires, are usually supplied with the insulation already on them.

The more common forms of insulation used on magnet wires are enamel, cotton, and silk coverings. The silk and cotton covered wires can be obtained with either single or double layers of this insulation. Combinations of enamel and cotton, or enamel and silk are also used.

In specifying or buying magnet wire we usually refer to its insulation by the first letters of the coverings used, as follows: E. for enamel covered; S.C. for single cotton; D.C. for double cotton; S.S. for single silk; D.S. for double silk; S.C.E. for single cotton and enamel; etc.

The plain enamel insulation is generally used only on the very small wires, but combined enamel and cotton or silk coverings are used on quite large wires.

The enamel used for insulating magnet wires is of a very good grade, being of very high dielectric strength, and flexible enough to allow the wire to be bent in a curve around a wire of its own size without damaging the enamel insulation.

Very small motors of the fractional horsepower portable types often use windings with only enamel insulation, because of the very small space this insulation occupies, and the ease with which it conducts heat to the outside of the coils.

It is well to **Use Wires With Sufficient Insulation to Protect Them From Short Circuits in the Finished Coils.** However, we must also remember that the **Thicker Insulations Require More Space and, Therefore, Allow Fewer Turns in a Slot of Any Given Size.**

Round magnet wires can usually be obtained in sizes from No. 46 to No. 6 B. & S. gauge.

The table in Fig. 13 gives the diameters of magnet wires from No. 14 to No. 44 B. & S. gauge. These diameters are given for the bare wires and also for wires with various insulations. The table also gives the areas and weights of these wires, and in the right-hand section some additional data which is very convenient in calculating and winding various coils.

Size B.&S. Gauge	Diam. bare wire in in.	Metric equiv in. M.M.	Diam. enam. wire in in.	Diam. S.C.E in in.	Diam. S.S.E. in in.	Diam. S.C.C. in in.	Diam. D.C.C. in in.	Diam. S.S.C. in in.	Diam. D.S.C. in in.	Area Cir. Mils.	Ohms per 1,000 ft.	Ohms per pound	Feet per ohm	Feet per pound
14	0641	1.628	.0661	.0711	.0681	.0691	.0741	.0661	.0681	4107	2.521	.2028	396.6	80.44
15	.0571	1.450	.0590	.0640	.0610	.0621	.0671	.0591	.0611	3257	3.179	.3225	314.5	101.4
16	.0508	1.291	.0526	.0576	.0546	.0558	.0608	.0528	.0548	2583	4.009	.5128	249.4	127.9
17	.0453	1.150	.0471	.0521	.0491	.0503	.0543	.0473	.0493	2048	5.055	.8153	197.8	161.3
18	.0403	1.025	.0419	.0469	.0439	.0453	.0493	.0423	.0443	1624	6.374	1.296	156.9	203.4
19	.0359	.9116	.0375	.0425	.0395	.0409	.0449	.0379	.0399	1288	8.038	2.061	124.4	256.5
20	.0320	.8118	.0335	.0385	.0355	.0370	.0410	.0340	.0360	1022	0.14	3.278	98.66	323.4
21	.0285	.7229	.0299	.0344	.0319	.0330	.0370	.0305	.0325	810.1	12.78	5.212	78.24	407.8
22	.0253	.6438	.0267	.0310	.0287	.0296	.0336	.0273	.0293	642.4	16.12	8.287	62.05	512.2
23	.0226	.5733	.0239	.0282	.0259	.0269	.0309	.0246	.0266	509.5	20.32	13.18	49.21	648.4
24	.0201	.5106	.0213	.0256	.0233	.0244	.0284	.0221	.0241	404.0	25.63	20.95	39.02	817.6
25	.0179	.4547	.0191	.0234	.0211	.0222	.0262	.0199	.0219	320.4	32.31	33.32	30.95	1031
26	.0159	.4049	.0170	.0210	.0190	.0199	.0239	.0179	.0199	254.1	40.75	52.97	24.54	1300
27	.0142	.3606	.0152	.0192	.0172	.0182	.0222	.0162	.0182	201.5	51.38	84.23	19.46	1639
28	.0126	.3211	.0135	.0175	.0155	.0166	.0206	.0146	.0166	159.8	64.79	133.9	15.43	2067
29	.0113	.2859	.0122	.0162	.0142	.0153	.0193	.0133	.0153	126.7	81.70	213.0	12.24	2607
30	.0100	.2546	.0108	.0148	.0128	.0140	.0180	.0120	.0140	100.5	103.0	338.6	9.707	3287
31	0089	.2268	.0097	.0137	.0117	.0129	.0169	.0109	.0129	79.70	129.9	538.4	7.698	4145
32	.0080	.2019	.0087	.0127	.0107	.0120	.0160	.0100	.0120	63.21	163.8	856.2	6.105	5227
33	.0071	.1798	.0077	.0117	.0097	.0111	.0151	.0091	.0111	50.13	206.6	1361	4.841	6591
34	.0063	.1601	.0069	.0109	.0089	.0103	.01[illegible]	.0083	.0103	39.75	260.5	2165	3.839	8311
35	.0056	.1426	.0062	.0102	.0082	.0096	.0136	.0076	.0096	31.52	328.4	3441	3.045	10480
36	.0050	.1270	.0055	.0095	.0075	.0090	.0130	.0070	.0090	25.00	414.2	5473	2.414	13210
37	.0045	.1131	.0050							19.83	522.2	8702	1.915	16660
38	.0040	.1007	.0044							15.72	658.5	13870	1.519	21010
39	.0035	.0897	.0039							12.47	830.4	22000	1.204	26500
40	.0031	.0799	.0035							9.888	1047	34980	.9550	33410
41	.0028	.0711	.0031							7.845	1333	54000	.7630	42000
42	.0025	.0633	.0028							6.250	1680	87400	.6050	52800
43	.0022	.0564	.0025							4.850	2120	132000	.4670	66400
44	.0020	.0502	.0023							4.000	2670	212500	.3850	82600

The above tables show average diameters which are subject to variations as follows:

Bare Wire—Sizes No. 30 and larger, 1% plus or minus. Sizes No. 31 and finer .0004" plus or minus.

Enameled Wire—Varying from .0001" plus or minus on the fine sizes to .0005" plus or minus on the heavy sizes.

Fabric covered Wire—Will take approximately the same variation as the bare and enameled wire.

Thickness of insulation can be varied to meet special space or dielectric requirements.

Winding Data Based on Actual Winding Space

Size Wire	Low Tension Coils		High Tension Coils Turns per sq. in.
	Turns per sq. in.	Ohms per cu. in.	
14	177	.037	
15	225	.060	
16	282	.098	
17	348	.146	
18	431	.229	
19	528	.354	
20	647	.547	653
21	793	.845	800
22	980	1.315	988
23	1297	2.195	1205
24	1590	3.400	1465
25	1970	5.31	1810
26	2395	8.15	2200
27	2980	12.75	2680
28	3990	21.50	3270
29	4870	33.10	3930
30	5960	51.20	4750
31	7330	79.40	6240
32	8960	122.3	7650
33	11920	205.5	9350
34	14500	315.0	11150
35	17600	482.0	13800
36	21700	750.0	16700
37	28700	1250	21300
38	34100	1870	25300
39	43000	2980	32600
40	52000	4490	41700
42	91700	12600	72500
44	130600	28300	106500

Method of Determining Actual Winding Space

Let D = outside diam. finished coil
d = inside diam. finished coil
L = overall length finished coil
An = Actual winding space low tension coil without cotton tape
At = Actual winding space low tension coil taped with cotton tape.
Ah = Actual winding space high tension coil

Then

$$An=(L-\tfrac{1}{4})\left[\frac{(D-\frac{1}{16}")-(d+\frac{1}{16}")}{2}\right]$$

$$At=(L-\tfrac{1}{16})\left[\frac{(D-\frac{1}{16}")-(d+\frac{1}{8}")}{2}\right]$$

$$Ah=(L-\tfrac{1}{4})\left[\frac{(D-\frac{1}{16}")-(d+\frac{1}{16}")}{2}\right]$$

Fig. 13. The above table gives some very valuable data, which will be of great help in determining the number of turns of any given size wire which can be placed in a slot of a certain area. Observe the thickness of the various types of insulation on these wires.

18. TYPES OF COILS

There are two general methods of winding armature coils. The proper number of turns can be wound directly into the armature slots, as is generally done on the small machines; or the coils can be wound and formed complete before inserting them in the slots, which is the more common method with larger armatures.

Fig. 14-A shows a **Diamond Type Coil** before and after pulling or shaping. The unfinished loop coil consists of three wires wound in parallel the desired number of turns, and after the coil is wound a layer of cotton tape is wound over it, with each turn lapping over the last by half its width. The coil is then pulled with a coil spreader into the shape shown in the lower view at "A".

At "B" is shown a coil of the same type wound with five wires in parallel instead of three. Coils are often wound with several wires in parallel in this manner because several small wires are more flexible than one large one. In other cases they are wound in this manner so their ends can be connected to a greater number of commutator bars.

One loop or coil connected between two commutator bars is called an **Element.** So coils wound with three wires in parallel are called **Three Element Coils.**

The coil at "A" is called a three element coil, while the one at "B" is a five element coil. The coil shown at "C" in Fig. 14 is known as the Eickemeyer type. The upper view shows it before taping, and the lower view after it has been taped and shaped. At "D" is shown a single turn coil of copper ribbon or bar, shaped into a wave coil with a diamond twist on the back end.

19. COIL AND SLOT INSULATION

In addition to the insulation on the wires themselves it is also necessary to insulate the coils and entire winding from the slots and armature core.

The insulations used for this purpose serve both to protect the coils from mechanical injury from contact with slot edges, and also to electrically insulate them from the slots.

The materials commonly used for **Mechanical Protection** are as follows: **Hard Fibre, Fish Paper, Manila Paper, Vulcanized Fibre,** and **Press Board.**

20. FIBRE AND PAPER INSULATIONS

Hard fibre, vulcanized fibre, and pressboard or fullerboard, are made of dense hard paper or pulp layers tightly packed under hydraulic pressure, and have a dielectric strength or voltage breakdown test of about 200 volts per mil (1/1000 inch), at thicknesses from 50 to 150 mils.

These materials are used wherever insulating material of exceptional mechanical strength is needed, as for armature slot wedges, etc.

Fish paper is made from rag stock and by a treating process becomes a hard fibre-like paper which is very strong and tough. It is very commonly used for lining armature slots.

Manila paper is made from linen or manila fibre, producing a tough, strong paper which when dry has very good insulating properties.

Fish paper and manila paper are commonly made in thicknesses from 4 to 28 mils. These materials give considerable electrical insulation, as well as mechanical protection to the coils.

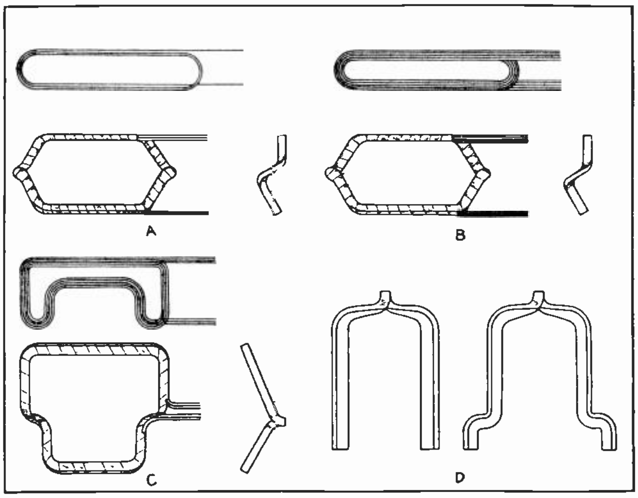

Fig. 14. This diagram shows several of the more common types of armature coils, both in the rough loop form and in the finished taped form.

21. VARNISHED CLOTH INSULATIONS

The materials particularly for **Electrical Insulation** are as follows: **Yellow Varnished Cambric, Black Varnished Cambric, Varnished Silk, Oiled Muslin,** and **Yellow Oiled Canvas.**

Yellow varnished cambric is a strong, closely woven cloth having an especially soft finish, and is treated with high-grade insulating varnish. The varnish is baked into the cloth, producing a tough, flexible material with a very high dielectric strength and a smooth glossy surface. This can be obtained either by the yard, or in standard width tape, and is used for insulating slots and for wrapping coils. It is commonly made from 7 to 12 mils thick.

Black varnished cambric is also a varnished cloth and is used in the form of straight cut tape for insulating wires and cables, and in a bias cut tape (cut at an angle to the weave) for taping armature coils.

Varnished silk is made of Japanese silk treated with a very high-grade insulating varnish and oven cured. This material is very light and thin, and has very high dielectric strength per mil. It is commonly used in 3 and 5 mil thickness, where light weight and minimum thickness are required.

Oiled muslin is a linen finish cloth, coated with oil and oven-cured to set the film to a hard smooth surface. It is a very flexible cloth of good insulating properties, and does not deteriorate much with age or vibration.

Yellow oiled canvas is a high grade duck cloth, treated with oil to produce a flexible water-proof material. It is commonly used for insulating field coils and for pads under railway motor field coils, etc. It can be obtained in 45 mils thickness and either by the yard in 36″ width, or in standard width tapes.

22. HEAT-RESISTING INSULATION

For **Heat Resisting** and **High Quality Electrical Insulation** we use **Mica, Micanite, Mica Paper**, and **Mica Cloth.**

Mica is a mineral which is mined in flake or sheet form, and is one of the very few materials which will maintain a high dielectric strength at high temperatures. It is not very strong mechanically in its original form, but is generally made up in sheets by cementing numerous thin flakes of it together. This is called micanite, and is used for insulating armature slots, between high voltage coils, and for commutator insulation. Flexible sheets are made by cementing mica splittings or flakes to paper or cloth.

A little thought and good judgment will enable you to select the proper insulating material from the foregoing list, according to the requirements for flexibility, space, insulation, and mechanical strength.

The following examples can be used as suggestions, however:

Typical insulation for 220 volt D.C. armature winding, with coils wound with D.C.C. round wire:

1. Slot insulation, fish paper .004″ thick.
2. Slot insulation, a layer of varnished cambric .008″ thick.
3. Coils taped with "half lapped" cotton tape .004″ to .007″ thick.
4. Entire coil dipped in insulating compound and baked.

Typical insulation for 500 volt armature winding, with coils wound with D.C.C. round wire:

1. Slot insulation, fish paper .004″ thick.
2. Slot insulation, fish paper and mica .012″ thick, made up of fish paper .004″ thick, 3 layers of mica splittings .002″ to .003″ thick, one layer of Japanese paper .001″ thick; all cemented together.
3. Coils taped with "half lapped" cotton tape .007″ thick.
4. Entire coil dipped in insulating compound and baked.

23. WINDING COILS

After the proper size of wire and the number of turns for the coils have been determined, either from the old winding in cases of rewinding, or from the designer's data on new machines, the next step is to wind the coils.

We should be very careful to get the proper number of turns and the right size of wire, as well as proper wire insulation.

When winding the coils care should be used to get them the correct length to fit the armature slots. If they are wound too short they will be very difficult or perhaps impossible to place in the slots. If they are too long, they will make the winding too bulky at the ends, and possibly cause it to rub the machine frame or end plates.

When rewinding an armature it is a good plan to pattern the new coils carefully after one of the old ones which has been removed, both in size and shape.

In winding an armature on which there are no coils to compare with, and no coil measurements given, it is well to make the first coil from your own measurements of the armature, and then try this finished coil in the proper slots before making the others.

Special machines can be obtained for winding and shaping coils of various sizes, and these are generally used in large repair or manufacturing shops. Fig. 15 shows an adjustable coil winder, for making coil loops of various sizes.

For the small shop or the occasional rewinding job to be done by the maintenance electrician, simple coil winding forms can be made up at very low cost.

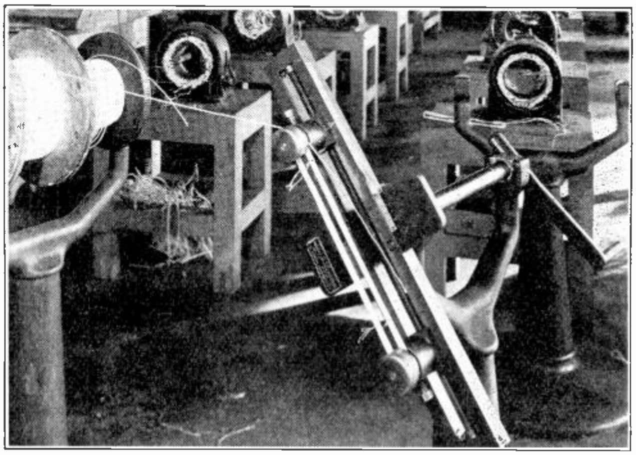

Fig. 15. The above view shows a coil winder which can be used for winding coil loops of different sizes, by adjusting the end pins along the slide. When the crank is turned the wire is wound directly from the spool into the slots on these end pins.

Fig. 16 shows several of these forms which can easily be made from pieces of board. At "A" is shown a flat board with 6 nails or wood pins driven in the proper shape to make a plain diamond coil. By moving the nails or pins, coils of most any desired size and shape can be made.

In Fig. 16-B is shown a method of placing another thick piece of board on the first one and driving the nails for the points of the coil, in the edge of this board at an angle. When the wires are wound over the corner of this board and down under these end nails, it shapes the twist in the coil ends as shown.

Fig. 16, C and D, show how an adjustable winding form can be made, which can be rotated on a large center bolt by means of a crank. This enables a coil to be rapidly wound, by allowing the wire to

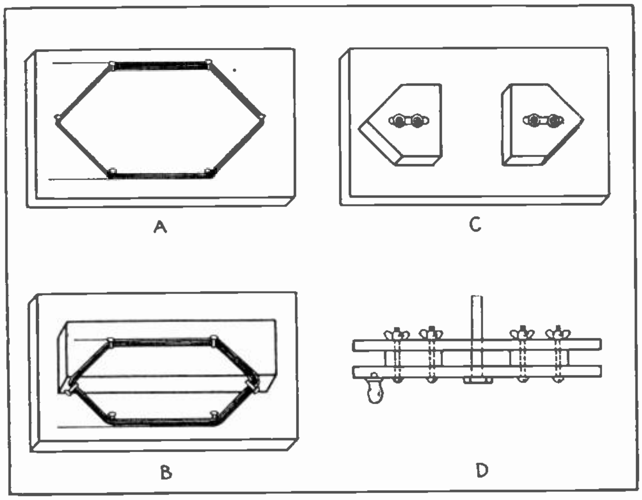

Fig. 16. Simple board forms can be made as shown above for winding coils of various sizes. These are very economical and easy to make, and a very handy device for the small repair shop to have.

run directly from a spool into this form as it is rotated; similarly to the coil winder shown in Fig. 15.

The two center blocks can be fitted with slots so they are adjustable for making coils of different sizes. When adjusted to the proper size for the coils to be wound, the other side-board can be put in place and the whole form clamped together by the bolts and wing nuts shown.

24. TAPING AND SHAPING OF COILS

Coils that are wound on forms of this kind can be tied together with short pieces of wire as they are removed from the form, removing these tie wires, however, before taping the coil.

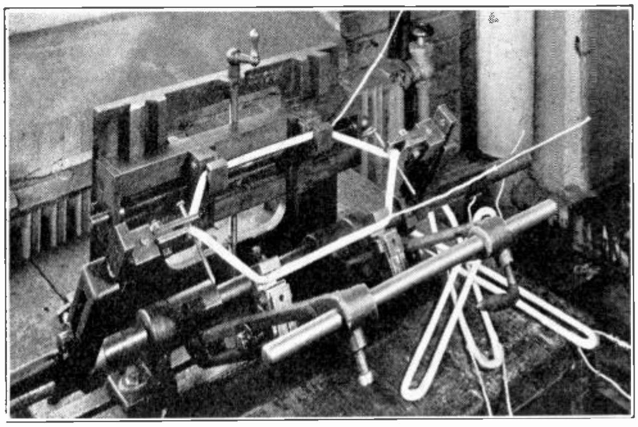

Fig. 17. This photo shows a coil shaping machine, which is used for pulling diamond coils into the proper shape and putting the twist in the ends as shown. This machine is adjustable to shape coils of different sizes

If the coils are to go in open type slots, they can be completely taped before inserting them. If they are to go into partly closed slots with narrow top openings, the wires must be fed into the slots a few at a time until the coil is all in place. Then the ends of the coil can be taped, and twisted in shape to fit compactly together in the smallest possible space. With the coils in the slots, the points can be gripped with duck bill pliers and twisted to just the right curve.

If desired, the coil ends can be twisted before placing them in open type slots, by hooking a spike or bolt through the coil end and giving it a pulling twist, while the coil is held spread out on four pins or a block.

Remember that to make a neat and well balanced winding it is very important to get all coils of the same size and shape, and the ends twisted uniformly and evenly. Fig. 17 shows a coil shaping machine used for shaping and twisting the coils before they are placed in open type slots.

Fig. 18 shows several coils in various stages of completion. The first coil at the left is just a plain coil loop of the proper length, before taping or shaping. In the center are three of these coil loops already taped. The two coils at the right are completely taped and shaped. Note the sleeving placed on the coil leads for marking and protection. A roll of cotton tape such as used for these coils is also shown, and underneath the tape and coils are shown a sheet of fish paper and a roll of varnished cambric such as used for slot insulation.

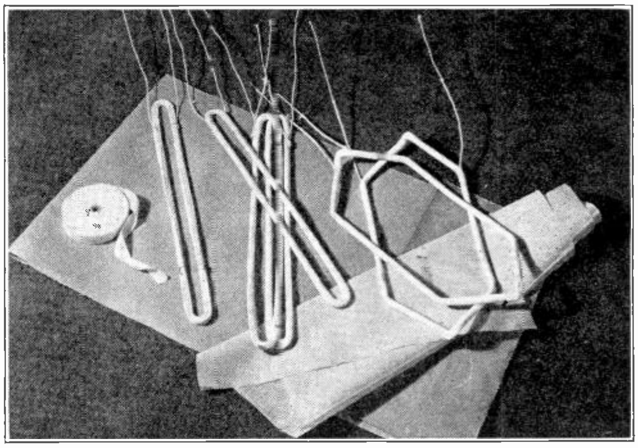

Fig. 18. Above are shown several armature coils, both in the unfinished loops and the completely taped coils. Also note the roll of cotton tape and the varnished cambric used for insulating the coils and slots.

LAP AND WAVE WINDINGS

Armature windings can be divided into two general classes, according to the methods of connecting the coils to the commutator. These are called **Lap** windings and **Wave** windings. These names are derived from the appearance of the coils when they are traced through the winding.

Fig. 19 shows a section of a lap winding. Starting with the coil at the left, trace the path of current through this coil as shown by the arrows, and then on through the next coil, etc. The coils are all alike but the one on the left is drawn with heavier lines to make it easier to trace the first one. Examining this diagram, we find that each coil overlaps the next as we trace the cricuit through them; thus the name **Lap Winding.**

Fig. 19-B shows the method of connecting coils for a wave winding. Starting at the left lead, trace the path of current through the two coils shown by the heavy lines. Note the location of the north and south field poles, which are shown by the dotted rectangles and marked "N" and "S". We find, by tracing the circuit through, that each coil in this circuit is separated from the last by the distance of one pair of poles, and you will note the wave-like appearance of the two coils traced in heavy lines, and from this appearance the name **Wave Winding** is derived

Lap Windings are known as parallel windings and are generally used for lower voltages and machines which must carry heavy currents.

Wave Windings are known as series windings and are generally used for machines of higher voltage and smaller currents.

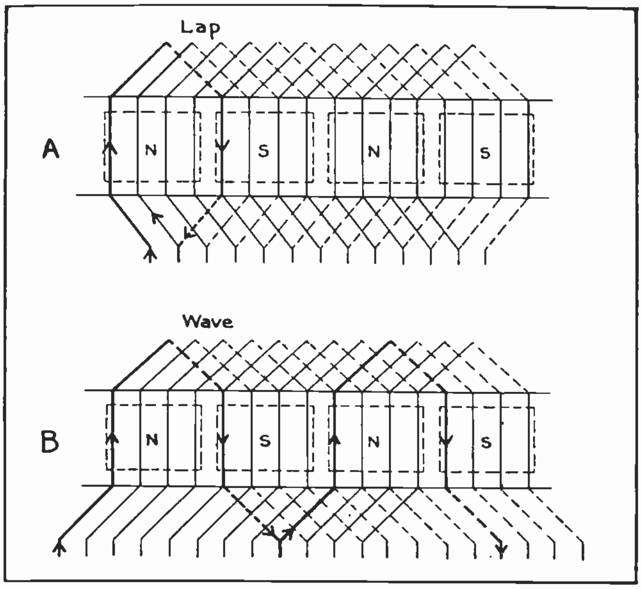

Fig. 19. The two above diagrams show the connections for a lap winding at "A", and a wave winding at "B". Observe carefully the manner in which the leads are brought out from the coils to the commutator bars.

In tracing through lap winding from one brush to the next, we find a number of coils or circuits in parallel between these brushes; while in tracing a circuit of a wave winding, we find a number of coils are in series between the positive and negative brushes.

Both lap and wave windings are used in armatures from fractional horse power sizes to those of hundreds of horse power. The type of winding selected by the designer depends on several factors in the electric and mechanical requirements of the machine. Wave windings require only two brushes on the commutator, while lap windings must have as many brushes as there are field poles. Wave windings are quite commonly used on motors for street cars and electric locomotives, because these machines are generally used on quite high voltage. Another advantage of wave-wound machines for this class of work is that their two sets of brushes can be located at adjacent poles and also on whichever side of the commutator they may be most convenient and accessible for inspection and repairs.

TYPE	POLES	BRUSHES	SPACING	CIRCUITS
LAP	2	2	180°M.	2
	4	4	90°	4
	6	6	60°	6
	8	8	45°	8
	10	10	36°	10
	12	12	30°	12
WAVE	4	2	90°	2
	6	2	60°	2
	8	2	45°	2
	10	2	36°	2
	12	2	30°	2

Fif. 20. This convenient table gives the number of brushes and circuits, and the brush spacing for lap and wave windings with different numbers of poles.

The table in Fig. 20 gives the number of brushes, brush spacing, and the number of circuits for lap and wave windings with different numbers of poles. These figures are given for **Simplex** windings, which will be explained later.

25. CURRENT FLOW THROUGH A LAP WINDING

Fig. 21 shows a complete four-pole winding of the lap simplex type. This diagram shows the position of the field poles by the dotted lines and markings "N" and "S". It also shows the direction of current flow through the armature conductors under each pole and the position of the brushes with relation to those of the poles. Note that the two negative brushes are connected together in parallel and the two positive brushes connected the same. This winding is drawn out in a flat plan view so that you can more conveniently trace the entire circuit and see all the coils. The last six slots on the right have only one coil side in each, while all the other slots have two coil sides in each.

If these coils were wound in a round armature with 24 slots as represented here, the first six coil sides on the left would overlap the last six on the right; and the top sides of coils A, B, C, D, E, F, would go in the same slots respectively with coil sides, A', B', C', D', E', F'. The current flow through this winding can be easily traced by starting at the negative brush G, and entering the left lead coil A, coming around this coil and leaving at its right lead. As there is no brush on segment 2 of the commutator, we must re-enter at the left lead of the coil B', following this coil around and out at its right-hand terminal; then through coils C, D, E, and F in the same manner, going out of the right lead of coil F, to the positive brush H. This completes one circuit.

Next trace the other circuit from the same brush G through coil lead B, which continues through the coil at the far right end of the winding. Trace this current counter-clockwise through coils F', E', D', C', B', and A', leaving at positive brush J.

The other two circuits from the negative brush I can be traced through in the same manner by starting with leads C and D. Thus we find we have four circuits in parallel, or the same number as there are poles.

Note that there are six coils in series in each circuit, and that the number of coils per circuit is equal to the total unmber of coils divided by the number of circuits.

By comparing this winding with the sketch at A in Fig. 19, we can see that it is nothing more than a number of coils all connected in series, with the finish of one coil attached to the start of the next, etc.

All coils for any given winding are connected the same as the first one. The two ends of each coil are connected to adjacent commutator bars, and this connection is known as the **Simplex Connection.**

Each coil lies in two slots and spans over the intervening slots. They are placed in the slots, one after the other, completely around the armature. In order to arrange the coil ends more compactly and in less space, one side of each coil is placed in the bottom of the slot, and the other side in the top of its slot. This permits the ends of the coils to fit closely together without crossing each other unnecessarily.

26. COIL SPAN

The number of slots spanned by one coil is known as the **Coil Span.** The two factors which govern this coil span are the number of slots in the core and the number of poles. When we know the number of slots and the number of poles of any machine, the correct coil span for its armature winding can be found as follows: **Divide the total number of slots by the number of poles, and the next whole number above this answer will be the number of slots the coil should span.**

For example, if we have an armature with 21 slots and for a machine with 4 poles, then 21 ÷ 4 = 5¼. The coil span, of course, cannot be a whole number and a fraction, and therefore the next whole number above 5¼ is selected. So the coil span will be 6 slots.

The top side of coil No. 1 will lie in slot No. 1, and the bottom side in slot No. 6.

In another case, we have a 28-slot armature to be wound for a four-pole machine. Then 28 ÷ 4 = 7; and the next whole number above this being 8, we will use a coil span of 1 to 8.

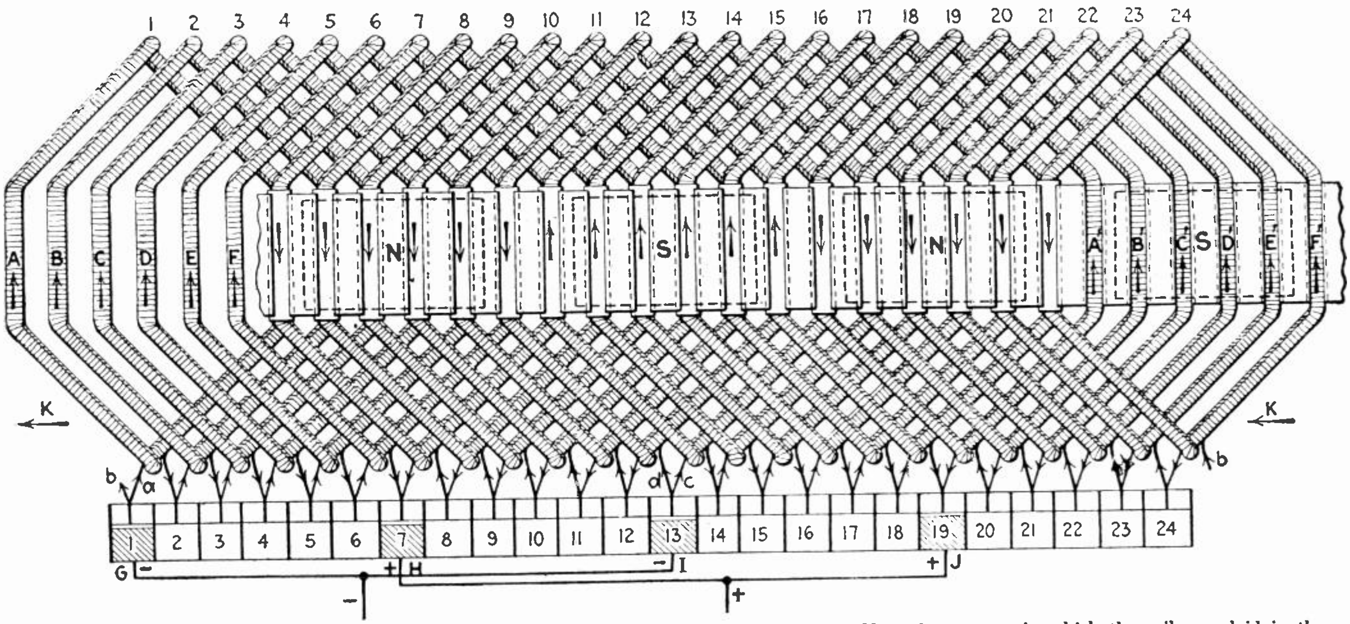

Fig. 21. The above diagram shows a complete four-pole lap winding of the Simplex type. Note the manner in which the coils are laid in the slots, with one side of each coil in the bottom of a slot and the other side in the top of its slot. Also trace out this winding carefully with the instructions given on these pages.

27. PREPARING AN ARMATURE FOR WINDING

Now that we know how to make the connections for a lap or wave winding and how to determine the correct coil span for a given number of slots and poles, our next step will be the actual placing of the coils in the slots. Before this is done, however, the slots must be prepared and insulated to protect the coils from grounding against the sides or corners of them. The slots should be smoothed out carefully with a flat file, to remove the sharp edges and burrs which are often found in the bottom and sides of slots. The commutator should also be prepared by making a slot in the **Neck** or **Riser** of each bar, in which the coil leads will be placed. We should also test across each pair of bars or segments with a 110-volt test lamp to make sure that no bars are shorted together, due to defective mica insulation between them. A test should also be made from the segments to the shaft, to be sure that no part of the commutator is grounded to it. This should always be done before starting a winding, because if the commutator is defective the armature will not operate properly when the winding is in.

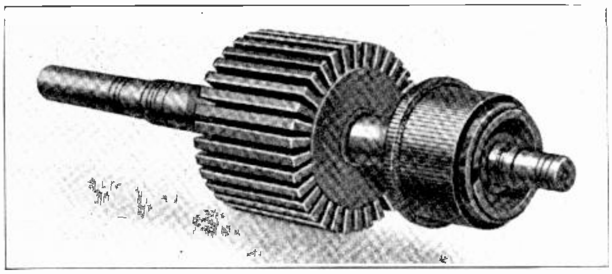

Fig. 22. The above photo shows a D.C. armature prepared for winding. The slots are cleaned and smoothed out, and the necks of the commutator bars have been slotted to receive coil leads.

Fig. 22 shows an armature with the core and commutator prepared for winding, and in Fig. 23 is shown an armature with the insulation placed in the slots. Note that this slot insulation is allowed to project slightly at the ends of each slot, to protect the coils at these sharp edges; and also out of the tops of the slots a short distance, to make it easier to slide the coils in, and to protect them from scratching or damaging the insulation while they are being placed in the slots. Also note the insulation wrapping on the coil support ring at the left end of the armature. All such metal parts against which the coils may rest should be thoroughly insulated by wrapping with fish paper or varnished cambric and tape, before any coils are placed in the slots.

28. INSERTING COILS FOR A LAP WINDING

By referring to several sketches in Fig. 24, the method of laying coils in place in the slots can be observed. In the three views at "A" the coils are wound in from the left to right, as shown by the arrow. Note carefully the manner in which each coil overlaps the last, and the manner in which the diamond shaped ends of the coils allow them to fit closely and neatly together, if they are properly shaped and twisted at the ends. In order to obtain a satisfactory winding job, it is essential that all coils be exactly the same size, and uniformly fitted in the slots and at their ends. Care and practice on these points are necessary to make a rugged and well-balanced winding.

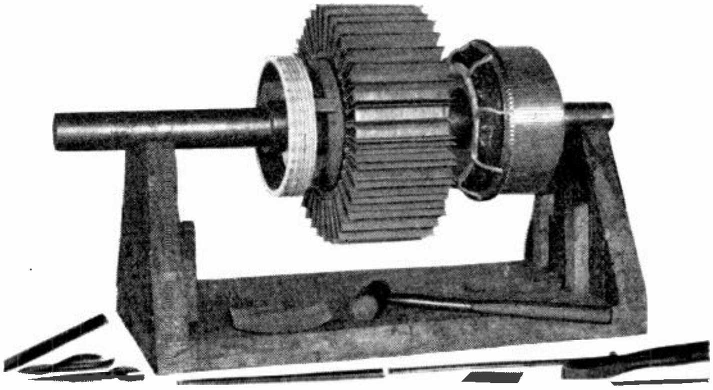

Fig. 23. This armature has the slot insulation in place ready to receive the coils, and you will also note that the coil support ring at the left end has been wrapped with insulating tape. The armature is mounted in a stand and free to revolve so it will be more convenient to place the coils in all the slots.

The coils at "B" in Fig. 24 are wound into the slots in the opposite direction around the armature, or to the left when facing the commutator end. Armatures may be wound in either direction, as it makes no difference in their operation. The direction in which the coils are placed in depends on the shape of the twist or curl at their ends, and the important point to remember is that if the coils are shaped as shown at "A", they must be laid in the slots to the right, in order to get their ends to fit together compactly. If the twists on the coil ends are made in the opposite direction, as at "B", then the coils must be laid in the armature to the left.

Sometimes coils fit very tightly in the slots and it is necessary to use a driver of some kind to force them down to the bottom of the slots. Such a coil driver can be easily made from a piece of hard fibre about three inches wide and six inches long, and just thin enough to slide easily through the top of the slot. After the coil is started in the slot, this driver is laid on top of it, and by tapping the top of the driver with a mallet the coil can be driven down in place. Extreme care should be used, however, not to apply too much force, as it may result in broken or cut insulation on the coil.

After the bottom side of the first coil is in place in the slot, (leave the top of this coil out for the present), the lower coil lead should be brought out to the commutator and driven into the slot in the proper segment. The angle of this lead, or whether it connects to a segment in line with the center of the coil as in Fig. 24, or is connected straight out to a bar in line with the side of the coil, depends upon the position of the brush with relation to the field poles.

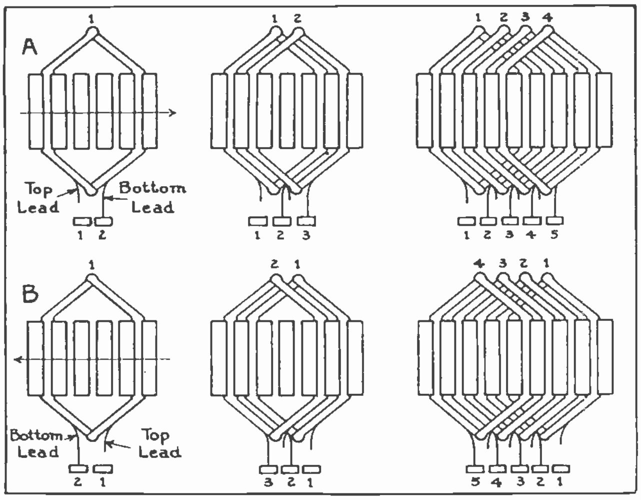

Fig. 24. The above diagrams show the method of laying coils of a lap winding in the slots. Note the direction the coils are laid in or progress around the core, according to the shape of the twist at their ends.

An explanation of these two different methods of connecting the coil leads is given a little later.

Now the first coil is in place and its lower side in the slot, the bottom lead connected to the commutator segment but the top side of the coil left out of its slot, and the top lead left unconnected. The second coil should be placed in the next slot and its bottom lead connected to the next adjacent commutator segment, but the top side of this coil and its top lead should also be left out, as with the first one. The next two coils are placed in the slots in the same manner. When the fifth coil is inserted both sides can be placed in the slots, as the coil span is one to five, and the top side of the fifth coil will lie in the slot with the bottom side of the first coil. The top lead of the fifth coil should be left disconnected from the commutator.

29. CONNECTING THE COILS

From this point on, both sides of all the other coils can be placed in the slots as the winding progresses, but all of their top leads should be left unconnected until all coils are in, and the bottom leads all in place.

A layer of varnished cambric should then be wound tightly around the bottom leads, and should be wide enough to extend from the ends of the coils to the commutator, so it will thoroughly insulate the bottom leads from the top ones. The top leads can then be connected to the commutator segments as follows:

The top lead of coil No. 2 in Fig. 24 will connect to segment No. 2, with the bottom lead of coil No. 1.

After carefully making this first connection, all the other leads can be connected in the same manner: the top lead of coil No. 3 to bar No. 3; the top lead of coil No. 4 to bar No. 4; etc.

After all the top leads are in place, the winding should be carefully tested for shorts, opens, and "grounds". This should always be done before soldering the leads to the commutator. The method of making these tests is explained in a later article.

We are now ready to trim off the excess insulation at the top of the slots. Fold in the edges neatly over the coil and place the slot wedges over it to hold the coils in. If the slots are not equipped with lips or grooves to hold the wedges in place, the armature should be banded with steel wires. The top leads are also quite often banded with steel wire or heavy twine to hold them rigidly in place and prevent their being thrown outward by centrifugal force when the armature is run at high speed.

If steel wire is used for banding these leads, they should first be well wrapped with several layers of fish paper or varnished cambric, to prevent any possible short circuits between them and the steel banding wire.

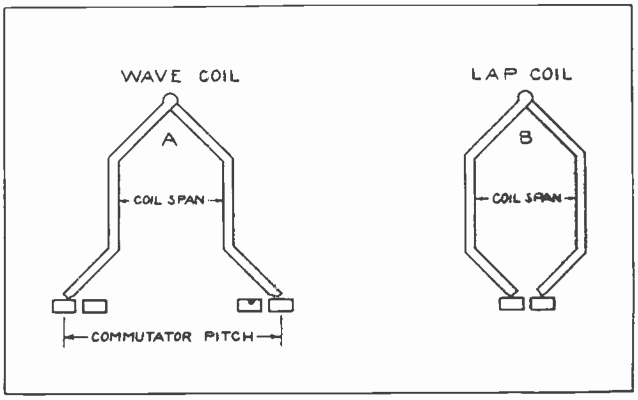

Fig. 24-C. At "A" is shown a coil for a wave winding and at "B" a coil for a lap winding. Note the difference in the way their ends or leads are brought out to the commutator bars, and the manner in which either side of the wave coil is braced in two directions by the angle of its front and back connections.

30. WAVE WINDINGS

The shape of wave-wound coils, their connections, and the manner in which they differ from lap windings, has already been explained. Wave windings have the advantage of their coils being more securely braced and held in place by the way they are arranged in the armature. This is due to the manner in which the coil ends are bent in the opposite direction from the coil side in the slot, while those of the lap winding are bent in the same direction as shown in Fig. 24-C.

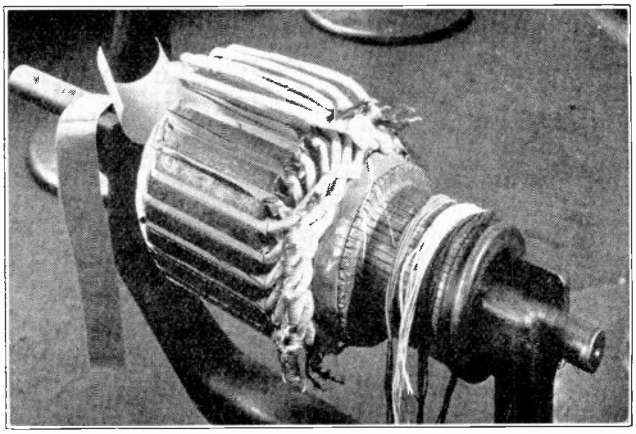

Fig. 24-D. This photo shows an armature completely wound, with the exception of laying in the last top coil sides, and connecting the leads to the commutator.

When an armature is in operation there is considerable centrifugal stress, which tends to throw the windings out of the slots; so the more rugged the winding can be made the better it is.

Automobile starting motors frequently use wave windings in open type slots, and even without bands on the armature. This is because the strength of the heavy wave coils is sufficient to hold the winding in place. Large A.C. machines which have wound rotors very often use wave windings, because of the greater mechanical strength of these windings when completed.

Fig. 25 shows a diagram of a complete wave winding. By tracing the coils, we find that there are only two circuits in parallel between the positive and negative brushes, but that there are eight coils in series. Two brushes are all that are needed to complete the circuits through all coils, but more brushes may be used, if desired, in order to reduce the current intensity in each brush. There can be as many brush groups as there are poles.

In Fig. 25, the two coils indicated by X and X are at present short circuited by the positive brush. Each pair of coils must reverse in polarity as they move from one pole to the next, and this current should reverse when the segments connecting these coils are shorted by the brush or, in other words, the brush should short circuit the coil as it passes through the neutral plane in the center of the space between two poles.

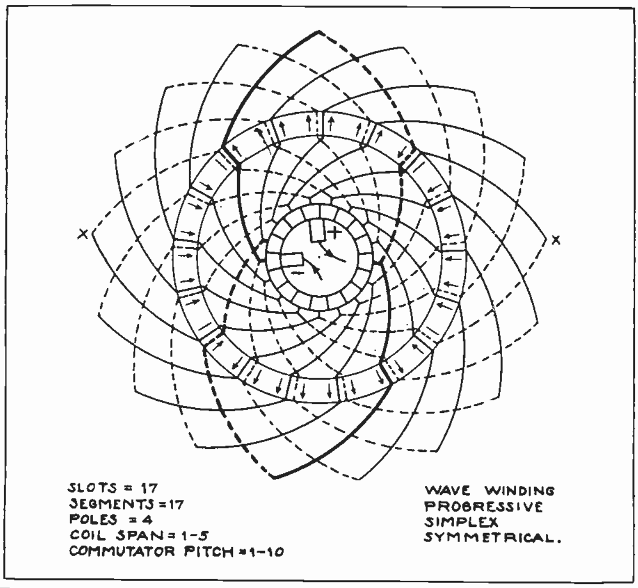

Fig. 25. This diagram shows a complete four-pole wave winding for an armature with 17 slots. Note the coil span and commutator pitch, and trace out the two coils shown with heavier lines.

31. PROCEDURE FOR WAVE WINDINGS

Wave windings are made much the same way as lap windings, and the coil span will be the same for a given armature regardless of which winding is used. The coils are laid from the bottom of one slot to the top of the other, the same as described for a lap winding, and they may also be wound either to the right or to the left. There is a difference, however, in the manner of making connections of their coil leads to the commutator bars, and in the distance between leads of any one coil. This distance between the coil leads is expressed by the number of commutator bars between them, and is known as **Commutator Pitch.** After this commutator pitch has been determined the coils are placed in the slots much the same as with a lap winding.

Commutator pitch for wave windings can be determined by the following formulas.

For a progressive wave windings—

$$\text{Pitch} = \frac{\text{Segments} + \text{plex}}{\frac{1}{2}\text{ the number of poles}}\text{, plus 1}$$

The term **Plex** refers to the methods of connection of the coils to the commutator, known as simplex, duplex, and triplex. These will be explained later.

In this formula simplex equals 1, duplex equals 2, triplex equals 3.

For retrogressive wave windings—

$$\text{Pitch} = \frac{\text{Segments} - \text{plex}}{\frac{1}{2}\text{ the number of poles}}\text{, plus 1.}$$

32. PROGRESSIVE AND RETROGRESSIVE

In Fig. 25 the coil sides which lie in the tops of the slots are shown by solid lines, while those which lie in the bottoms of the slots are shown by dotted lines. If we start at the negative brush and trace the top lead of the upper coil shown in the heavy lines, we find that the bottom lead of the second coil in this circuit connects to a commutator bar just to the right of the one at which we started, and if we trace on around the next pair of coils we arrive at a bar one more step to the right. This is known as a **Progressive Winding,** and applies to **either lap or** wave windings.

If, after tracing through two coils, the bottom lead of the second coil connects to a bar to the left of the one at which we started, it is called a **Retrogressive Connection.**

33. INSERTING COILS OF A WAVE WINDING

Fig. 26 shows the procedure of laying in the coils for a winding such as shown in Fig. 25. At "A" the first coil is placed in the slots and the bottom lead brought out to its commutator segment. The proper point for this first connection can be found by locating a commutator segment that is in line with the center of the coil as shown at "A". Then divide by 2 the commutator pitch which has previously been determined, and count off this number of bars to the right of the center bar, which has been located. This will locate the proper bar to connect the bottom lead of the first coil to. This distance is shown from "A" to "B" in Fig. 26-A.

Sometimes a mica segment will be in line with the center of the coil and in this case we start to count with the next bar to the right as No. 1. If the commutator pitch happens to be an odd number, dividing this by 2 will give a whole number and a fraction, in which case we should use the next larger whole number.

After the first coil is in place but with its top side and top lead left out, the second coil is inserted in the next slot to the right and the bottom lead will be connected to the next bar to the right of the first one. The third and fourth coils are inserted in the same manner, leaving their top sides and leads out. The fifth coil can have both sides placed in the slots, but its top lead should still be left unconnected, as should all the other top leads, until all coils are in place.

When the winding is completed around the armature and the bottom sides of the last four coils are in their slots, then the top sides of the first coils can be placed in on top of these. After all coil sides and bottom leads are in place, the top leads are then connected to the commutator bars.

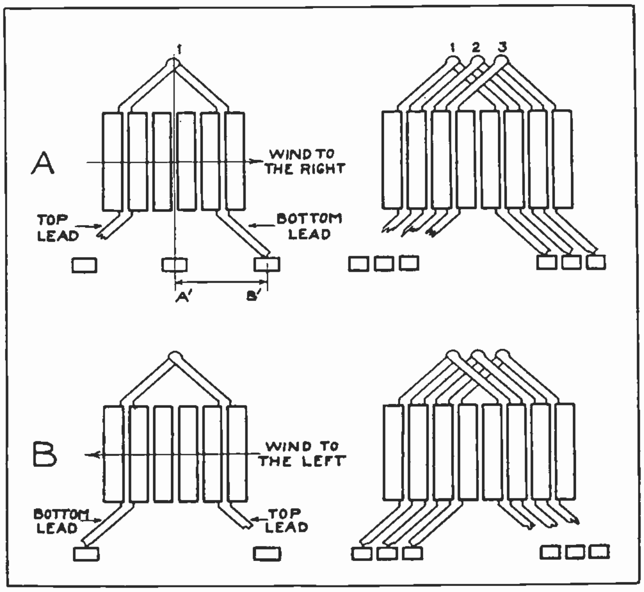

Fig. 26. The above views show the method of laying the coils of a wave winding in the slots. One side of each coil should go in the bottom of the slots, and the other sides in the tops of slots, and the coils should be laid in in the directions as shown and according to the shape of the twist on their back ends.

34. DETERMINING COMMUTATOR PITCH AND CONNECTING THE COILS

The armature shown in Fig. 25 has 17 slots and 17 commutator segments and is connected simplex. We will use it for an example to determine the commutator pitch.

We have learned that:

$$\text{Commutator pitch} = \frac{\text{Segments} + \text{plex}}{\frac{1}{2}\text{ number of poles}}, \text{ plus } 1,$$

$$\text{or:—pitch} = \frac{17 + 1}{2}, \text{ plus } 1$$

In which:

17 = slots
1 = simplex
2 = ½ of 4 poles

With a commutator pitch of 10, the coil lead from the top side of one coil will connect to bar No. 1, and the lead from the bottom of the same coil to bar No. 10, counting toward the coil that is being checked. After the first top lead is connected all the others are connected in the same way.

The completed winding is then wedged and banded if necessary, as was done with the lap winding.

We should remember that all armatures cannot be wound wave. The commutator pitch formula determines whether a winding can be connected wave or not. When a commutator pitch is a whole number and a fraction the winding cannot be connected wave.

35. ELEMENT WINDINGS

That part of the armature winding which is connected between two commutator bars is called a **Winding Element.** A simple winding element would consist of one complete turn of wire. Each side of this turn or coil is referred to as an armature conductor or sometimes as an "inductor". Each element, therefore, will have at least two conductors, and may have many more, according to the number of turns per coil.

In many armatures the coils are wound with several conductors in parallel and the ends of each of these conductors can be connected to separate commutator bars. This will, of course, require a greater number of commutator bars than there are slots in the armature. But many machines are designed in this manner to reduce the voltage between bars.

It is not good practice to have too high a voltage across adjacent commutator bars, because of the greater strain placed on the mica insulation and the increased tendency to flash over or arc between bars while the machine is in operation.

Carbon particles from the brushes and metallic dust from the commutator tend to start small sparks or arcs of this kind; and if the voltage between bars is too high, the arcs will be maintained and possibly burn the mica insulation between the bars. If this mica becomes charred or deeply burned, it results in a short circuit between bars, which will cause the coils of the windings to heat up and possibly burn out.

On larger machines the voltage between bars usually doesn't exceed about 25 volts. On smaller machines it may range from 2 to 10 volts. So we can readily see that the higher the voltage the machine is to be operated at, the greater number of commutator bars it will usually have. This number of bars is determined by the designer or manufacturer in building machines on any given voltage.

The number of slots in an armature is determined by the number of poles and the practical number of slots which can be used per pole. The slots, of course, cannot be too numerous or close together, or there will not be sufficient iron between the coils to provide a good magnetic path through the armature for the field flux.

The number of slots is generally considered in determining the exact number of commutator bars, as the number of bars is usually a multiple of the number of slots. For example, an armature with 24 slots might have 24, 48 or 72 commutator bars. In the latter case the coils would be wound with three conductors in parallel, and the three leads from each coil connected to three adjacent bars.

So we find that armature windings can be called single element, double element, or three element windings, according to the number of conductors in parallel in the coils, and the number of bars in proportion to the number of slots.

36. WINDING SMALL ARMATURES

In the following paragraphs we will explain in detail the method of winding a small armature having 12 slots and 24 segments.

The slots should first be thoroughly insulated with fish paper about 10 mils thick, and varnished cambric about 7 mils thick. The fish paper is placed in the slot, next to the iron core, and the varnished cloth or cambric is placed inside the fish paper. To complete the insulation of the core we generally use at each end a fibre lamination which is shaped the same as the iron core laminations and has the same number of slots stamped in it. This protects the coils at the corners of the slots.

The armature should be held or clamped with the commutator end next to the winder.

In winding the first coil the number of turns will depend on the size of the armature and its voltage rating. If this number is taken from coils in an old winding, the turns in one of the old coils should be very carefully counted.

The first coils for this armature will go in slots 1 and 7, winding to the right of the shaft, at both the front and back ends of the core. After winding in one coil, a loop about 4 inches long should be made at slot No. 1. Then continue and wind the same number of turns again, still in slots Nos. 1 to 7. When the last turn is finished, run the wire from the 7th slot over to the 2nd, and make a loop at slot No. 2. Next wind a coil in slots Nos. 2 and 8, and again make another loop at slot No. 2. This places two coils and two loops in each slot, and the same procedure should be followed until there are two coils and two loops in every slot.

The slot insulation should then be folded over the tops of the coils, and the wedges driven in.

The loops are next connected to the commutator, one loop to each segment, and they should be connected in the same way that they were made in the winding. That is, the first and last single wires are brought together and connected to a segment straight out from the first slot. The second loop in the first slot is connected to the next bar, and the first loop in the second slot connected to the next, etc.

To avoid mistakes these loops should be marked with cotton sleeving which is slipped on over them as they are made. Red sleeving could be used on the first loop of each slot, and white sleeving on the second, which will make it easy to locate the first and second loops for each slot. This winding would be used in a two pole frame, and has two circuits with 12 coils in each. If 110 volts were applied to this winding the voltage between adjacent commutator segments would be 110 ÷ 12, or 9⅙ volts, which is not too high between adjacent bars. If this same armature had a commutator of only 12 segments, the voltage between bars would be 110 ÷ 6, or 18⅓ volts, which is too high for this sized armature.

37. ELEMENT WINDINGS FOR LARGE ARMATURES

In winding large armatures having twice or three times as many segments as there are slots, the coils are made up specially for the type of armature and wound with two or more wires in parallel.

In Fig. 27-A are shown the coils for two-element armatures. These coils are wound with two wires in parallel; and when the coil is completed, two small coils or elements are in each bundle. These two elements are taped together with cotton tape. The top and bottom leads of one element are marked with sleeving of one color, and those of the other element are both marked with sleeving of another color.

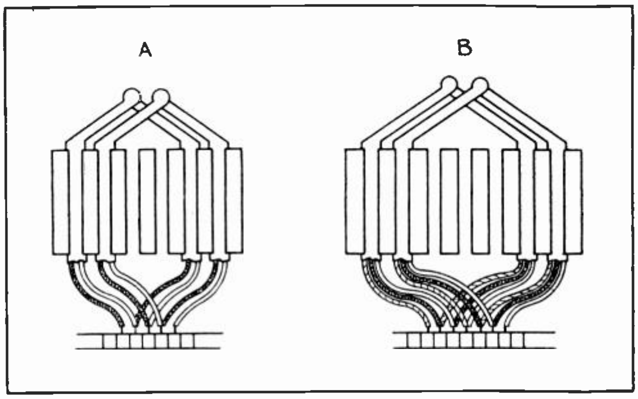

Fig. 27. The diagram at "A" shows the connections of lap coils for a two element winding. At "B" are shown the connections for a three element winding. Note how the separate windings in each coil are connected to two separate commutator bars.

These coils are placed in the slots the same way as single element coils, the only difference being that there are two bottom leads to connect instead of one. When connecting the bottom leads a definite system should be followed in the colors. If black and red sleeving are used to identify the two elements, first connect a black lead and then a red. When the second coil is placed in, again connect a black lead and then a red one.

In order to avoid mistakes in the connections, all coils should be connected in a similar manner. When the top leads are connected use the same system, and connect around the armature in the same direction. This method can be used on any armature, regardless of the combination of slots and segments.

Fig. 27-B shows the coils for a three-element winding having three wires wound in parallel in each coil, and the leads marked with three separate colors. Three colors are alternated when the bottom leads are connected in, each succeeding coil being connected similarly. The top leads are connected around the armature in the same direction as the bottom leads were, and the colors alternated in the same manner.

A wave winding may be of 2, 3, 4, or more wave elements, and the system for connecting these coils is the same as for a single element wave winding, only more than one lead is connected to the commutator from each coil. The leads are marked with sleeving and the colors are alternated as in the lap windings.

Many 2 and 3 element wave-windings have dead coils which are not connected in the armature circuit. They occur when the number of segments in the commutator is less than a multiple of the number of slots. When a winding has one dead coil it should be left in the slots to mechanically balance the armature; but if more than one dead coil occurs in a winding they may be left out, provided they are at equally distributed points around the armature core.

38. CHANGING AN OLD MOTOR FOR NEW CONDITIONS

It is often desired to change the voltage or speed at which a motor may operate, and in such cases some change is usually made in the windings. We have already learned that the voltage of an armature winding depends on the number of turns per coil. So it is evident that if any change is made in the number of turns between brushes it will have a direct effect on the voltage. The voltage of a winding will vary directly with the number of turns.

For example, a winding has 10 turns per coil of wires 4000 C.M. in area and operates on 110 volts. If we wish to rewind this machine for 220 volts we can do it by using 20 turns per coil of wire with 2000 C.M. area. This rewound armature would operate on 220 volts with the same speed and horse power as it formerly did on 110 volts.

It will be necessary, however, to change the field coil connections also. If they were formerly connected two in series and two in parallel, as in Fig. 28-A, they could be reconnected all in series, as shown in Fig. 28-B, and would then operate satisfactorily on 220 volts.

If the field coils are all connected in series on 110 volts, they cannot be changed for 220-volt operation without rewinding. To rewind them for double voltage, we should use approximately twice as many turns of wire, which is one-half as large as the wire with which they were formerly wound.

The resistance of the field coils will have to be increased to stand the increased voltage. This, of course, will reduce the amount of current flowing, but the additional number of turns will maintain approximately the same ampere-turn strength of the field magnets. If we change the number of turns in the winding of an armature and leave the applied voltage the same, its speed will vary inversely with the number of turns.

For example, if an armature is wound with 25 per cent more turns, the speed will decrease about 25 per cent if the machine is left on the same voltage.

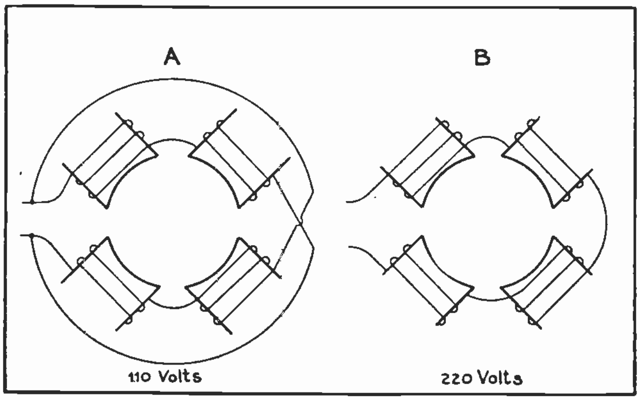

Fig. 28. The above diagram shows the methods of changing the field pole connections from parallel to series to be able to operate them on higher voltage.

39. MULTIPLEX WINDINGS

In some cases, where armature windings are designed to carry very heavy currents and at lower voltages, the connections can be arranged to provide a greater number of circuits in parallel through the windings. Windings connected in this manner are called **Multiplex Windings.** Those which we have covered so far have been **Simplex Windings;** and, in the case of the lap windings described, they have had the start and finish leads of each coil connected to adjacent bars of the commutator. Fig. 29-A shows a coil of a lap winding connected in this manner. With simplex connections a lap winding will have only as many circuits in parallel as there are field poles.

If we simply move the finish lead of a coil one segment further from the starting lead, and use a wider brush to span two bars instead of one, we have provided twice as many circuits through the winding, or two circuits for each pole. This is called a **Duplex Connection** and is shown in Fig. 29-B.

If we move the leads one more segment apart, we provide 3 circuits per pole, and have what is known as a **Triplex Connection,** as shown in Fig. 29-C. In this case the brush must be wide enough to span three commutator segments.

Fig. 30 illustrates the difference between simplex and duplex connections, with simplified winding diagrams. These sketches are laid out to show the winding in a straight form. On the actual armature the ends of this winding would come together at the points marked X and X.

In Fig. 30-A is shown a simplex connection with the start and finish leads of each coil connected to adjacent segments. If we start at the positive brush and trace the circuit to the left to the negative brush, we will pass through 12 coils in series: and the same will be true of the other circuit traced to the right from the positive brush to the point X, which in reality connects back to the negative brush in the actual winding. So we find we have two circuits in parallel between the brushes, and each of these circuits consists of 12 coils in series. If we assume that each coil is wound with a sufficient number of turns to produce 10 volts and with wire of a size that will carry 5 amperes, then this winding will produce 120 volts between brushes and have a total capacity of 10 amperes.

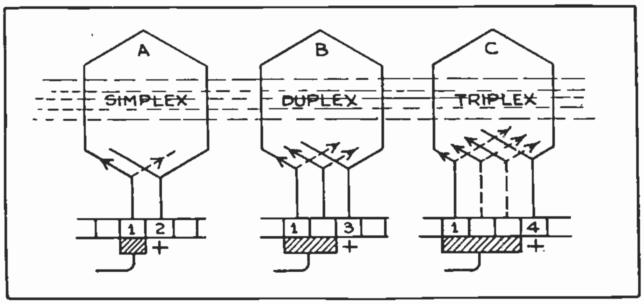

Fig. 29. "A" shows the connections for a coil of a simplex lap winding. "B" shows the connections for a duplex lap winding, and "C" those for a triplex lap winding.

This is easily understood by recalling our laws of series and parallel circuits. We know that when coils are connected in series their voltages are added. So 12 coils with 10 volts each will produce 12 × 10, or 120 volts.

Connecting circuits in parallel does not increase their voltage, but does increase the current capacity; so with two circuits each having five amperes capacity and connected in parallel, the total current capacity will be 10 amperes.

In the lower sketch of Fig. 30-B, we have simply moved the start and finish leads of each coil one bar farther apart, which in effect makes two separate windings, or 4 circuits in parallel between the positive and negative brushes. In this diagram we have lengthened the coils of one section simply to make them easier to trace separately from the other. Tracing through any one of these four circuits from the positive to negative brush, we now find there are only six coils in series. So the voltage of this winding will be 10 × 6, or 60 volts. But as we now have four circuits in parallel between the positive and negative brushes, the current capacity of this winding will be 4 × 5, or 20 amperes. The wattage of either winding will be the same, however.

The brush span for a simplex winding is generally equal to the width of one to 1¾ segments, while for a duplex and triplex winding it must be increased proportionately.

Wave windings can also be connected duplex or triplex if the commutator pitch is a whole number. So the surest way to determine whether a wave wound armature can be connected duplex or triplex, is to calculate the commutator pitch; and if this number is a whole number and fraction the winding cannot be connected multiplex.

40. NEUTRAL PLANE—IMPORTANT TO COMMUTATION

We have learned that the coils of a motor or generator winding must have their polarity reversed as the coil sides move thru the **neutral plane** between two field poles. As the armature rotates and the segments slide under the brushes, the brushes repeatedly short circuit the coils which are connected to adjacent brushes. In order to avoid bad sparking at the brushes this short circuit must occur at the time the coil is dead, or passing thru a neutral point where no voltage is induced in it. This means that the brushes must always be in the correct position with regard to field poles, in order that they may short circuit the coils at the right time. This point is of great importance to good commutation, and will be more fully discussed later.

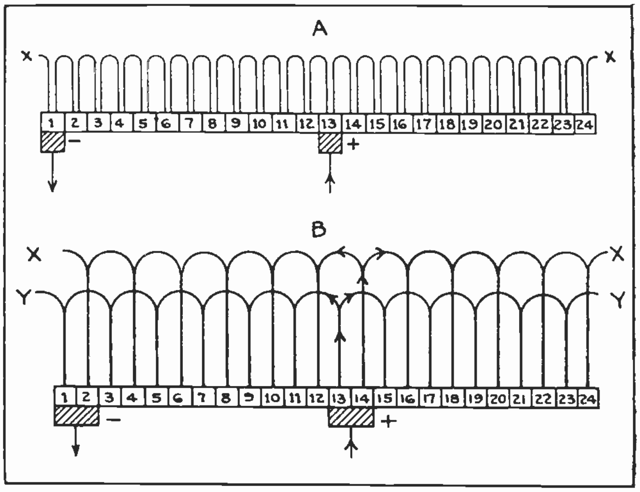

Fig. 30. At "A" is shown a simplified diagram of the circuit in a winding connected simplex lap. At "B" the winding is connected duplex, doubling the number of circuits from positive to negative brush.

41. SYMMETRICAL AND NON-SYMMETRICAL CONNECTIONS

The angle at which the coil leads are brought out from the slots to the commutator segments depends upon the position of the brushes with respect to the poles. If the brushes are placed in line with the centers of the field poles, then each coil lead comes out from the slots at the same angle, to two bars directly in the center of the coil. This is called a **Symmetrical Connection,** as it leaves the coil and leads in a symmetrical diamond shape.

Fig. 31-A shows this condition on a machine which has the brush located in line with the center of the field pole, and you will note that the leads are of equal length and brought out from the slots to the two bars in the center of the coil span. If the brushes of the machine are located at a point between the field poles, the coil leads must be carried to one side in order to be connected to the segments at the time they are short circuited by the brush.

Fig. 31-B illustrates this condition. One lead is

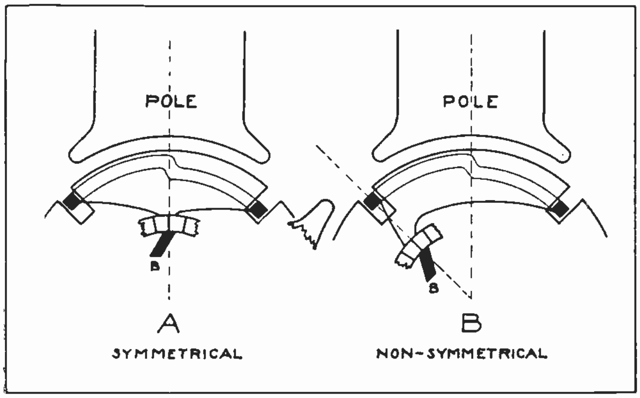

Fig. 31. Note the position of the brushes with respect to the poles, and also the shape of the end connections of the above lap winding coils for symmetrical and non-symmetrical windings.

brought straight out from the slot to the segment, while the lead from the other side of the coil is carried clear across to the adjacent segment. This is called a **Non-Symmetrical Connection**, because of the lengths and unbalanced shape of the coil leads.

Whether the brushes are located in line with the center of the field poles or in line with the neutral plane depends, to quite an extent, on the mechanical design of the machine. In some cases the brushes are much easier to get at for adjustment and replacement, if they are located as in Fig. 31-B.

In small fractional-horse-power motors there is generally very little space between the centers of the field coils and the end shields. So the brush holders are frequently bolted to the end shields at a point between the poles. This makes necessary the use of a non-symmetrical connection on the armature coil leads.

On larger machines, where there is plenty of space for the brush holders, they are usually placed in line with the centers of the field poles, and the coil leads of the armature are connected symmetrically.

42. COLLECTING DATA FROM OLD WINDINGS

When rewinding any armature, care should be taken to collect sufficient data while dismantling the old winding to enable you to put in the new winding correctly. It is a very good plan to mark the slots and commutator segments from which the first coil and leads are removed. This can be done with a prick-punch or file, as shown in Fig. 32. One small punch mark can be placed under the slot that held the top coil side, and two dots under the slot that holds the bottom side of the same coil. The top leads are then traced out to the commutator, and each bar that they connect to should be marked with one dot. Next trace the bottom leads to the commutator, and each of the bars they connect to should be marked with two dots. This can be done with both lap and wave windings, and is a positive way of keeping the core and commutator marked, to be sure to replace the coils and connections properly.

If necessary, you can also make a sketch or diagram of the first few coils removed. This sketch can be made similar to the ones in Fig. 32, and can show the exact coil span, commutator pitch, etc.

In addition to marking the core and commutator and keeping a diagram of the winding and connections, the following data should be carefully collected as the old winding is removed.

1. Turns per element.
2. Size of conductor.
3. Insulation on conductor.
4. Coil insulation.
5. Slot insulation (layers, type, and thickness.)
6. Extension of slot insulation from each end of core.
7. Extension of straight sides of coils from each end of the core.
8. Over-all extension of the winding from the core, both front and back.

If these things are carefully observed and recorded, you should have no difficulty in properly replacing most any type of winding and getting it back in the same space, and with the same connections. It will, of course, require a little practice to be able to make your coils exactly the proper size and shape so they will fit neatly and compactly in the armature.

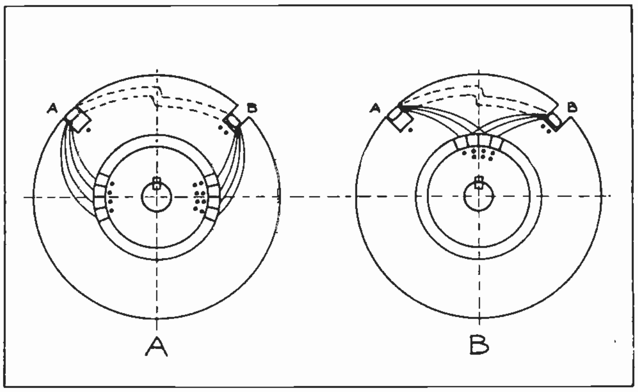

Fig. 32. A very simple and sure way of marking the commutator and armature when removing an old winding is shown above. Compare these sketches carefully with the instructions given, so you will be able to replace windings correctly.

43. BANDING ARMATURES

Wire bands, as previously mentioned, are generally used on large armatures having heavy coils, to hold the coil ends securely in place. If the core has open slots, bands are often used over the core to hold the wedges in place. High-grade steel piano wire is commonly used for this purpose and can be obtained in rolls in various sizes. This wire is usually tinned at the factory.

When a banding machine is not available, a lathe can be used to hold the armature while the bands are wound on. A layer of paper or cloth is usually placed under the band. Cloth makes the best foundation for bands placed on the coil ends, as the cloth tends to keep the bands from slipping off. A layer of fuller board or fish paper can be used under bands placed around the core. Grooves about 1/32 of an inch deep are usually provided for the bands on cores with open slots.

The paper should be cut carefully to the exact width of this groove, so it will fit snugly and without sticking out at either side. The banding wires should be wound on under tension, so they will be firm and tight when completed. A simple tension clamp or brake can be made by cutting two strips of fibre ¼ inch by 1½ by 6 inches, and bolting these together with two small bolts, using wing nuts on each end. Place these pieces of fibre in the tool post of the lathe and run the wire between them. Then, by adjusting the two wing nuts, any desired tension may be obtained.

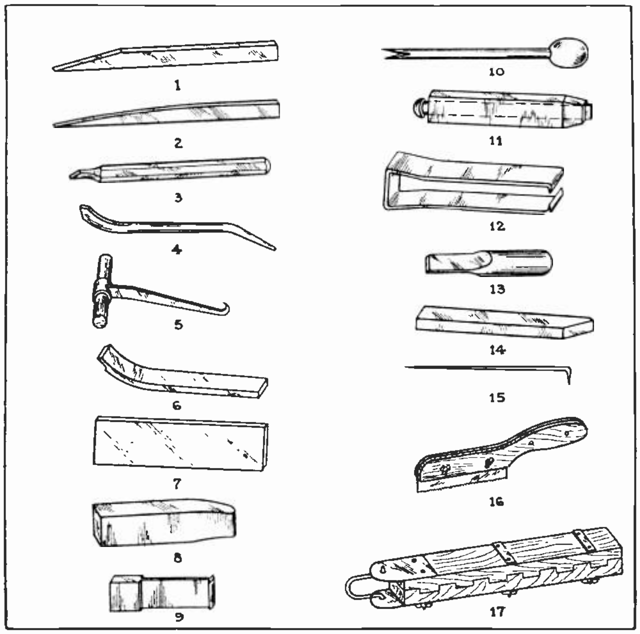

Fig. 32-C. Above are shown a number of the more common tools used in armature windings. No. 1 is a stripping tool for stripping open slot armatures and stators. No. 2—coil lifter for lifting coils from the slots. No. 3—lead lifter for lifting coil leads from commutator risers. No. 4—lifting tool for prying tight coils from slots. No. 5—coil hook to break coil ends loose from insulating varnish. No. 6—coil puller for sliding top sides of coils into slots. No. 7—fibre slot drift for driving coils into slots. (4 thicknesses needed: 3/16", 5/16", 7/16", 9/16") No. 8—fibre coil shaper for shaping coil ends after coils are in slots. No. 9—steel slot drift for driving coils to the bottom of partly closed slots. No. 10—push cutter for trimming edges of slot insulation. No. 11—wedge driver for driving wedges into partly closed slots. No. 12—wire scraper for removing insulation from ends of coil leads. No. 13—lead drift for driving coil leads into commutator risers. No. 14—one sided chisel to cut off leads at risers. No. 15—commutator pick for picking out short circuits between segments. No. 16—under cutting saw for under cutting commutator mica. No. 17—banding clamp for placing tension on banding wires while winding them.

To start the first band, make a hook of heavier wire and attach the band wire securely to this hook. Then slip the hook under the ends of a couple of coils close to the ends of the slots and start winding the band wire on the core. Make two or three gradual turns around the core to get the band wire over to the first slot. As the first turn is wound in the slot, narrow strips of tin should be placed in the slot under it, and every few inches apart around the core. Drawing the first turn tight will hold these strips in place, and other turns are then wound on over them. Wire should be wound with the turns tightly together until this groove is full. Then fold up the ends of several of the tin strips to hold these wires in place, run the wire across to the next groove with a couple of gradual turns around the core, and start the next band without cutting the wire. Continue in this manner until all the bands are on. Then, before releasing the tension on the wire, run a thin layer of solder across each group of band wires in several places, to keep them from loosening when the end wires are cut.

After cutting the wires between the bands, cut these ends off to the proper length, so that they will come directly under one of the tin clamping strips. Then fold in the ends of all these strips tightly and solder them down with a thin layer of solder.

These tin strips are usually about 15 mils thick, and ¼ inch wide, and should be cut just long enough so that their ends will fold back over the bands about ¼ inch.

44. ARMATURE TESTING

We have already mentioned the importance of being able to systematically test armatures to locate faults and troubles in their windings. One of the most common devices used for this purpose is known as a **Growler**, and sometimes also called a "bug" or "mill."

A growler is constructed of laminated iron in the form of a core, around the center of which a coil of insulated wire is wound, as shown in Fig. 33. When this coil is connected to an alternating current supply it sets up a powerful alternating magnetic field at the two poles of the growler.

Growlers are made with poles shaped at an angle, as shown in the illustration at "A", so that small and medium sized armatures can be laid in these poles. Growlers are also made with poles shaped as shown in Fig. 33-B, so they can be conveniently used on the inside of large alternating current windings, as will be explained later.

The growler shown at "B" has its windings arranged in two separate coils and the leads are connected to a double-throw, double-pole switch, so that the coils can be used either in series or parallel by changing the position of the switch. This permits the growler to be used on either 110 or 220 volts, and also makes possible an adjustment of growler field strength for testing windings with different numbers of turns and high or low resistance.

45. GROWLER OPERATION AND USE

When an armature is placed in a growler and the current turned on in the coil, the flux set up between the poles of the growler builds up and collapses with each alternation; thus cutting across the armature coils and inducing a voltage in them, in a manner similar to the action in a transformer. If there are no faults of any kind in the armature winding, no current will flow in the coils from the voltage induced by the growler; but, if there is a short circuit between two of the commutator segments or within the turns of a coil, an alternating current will flow in this shorted coil when it is placed at

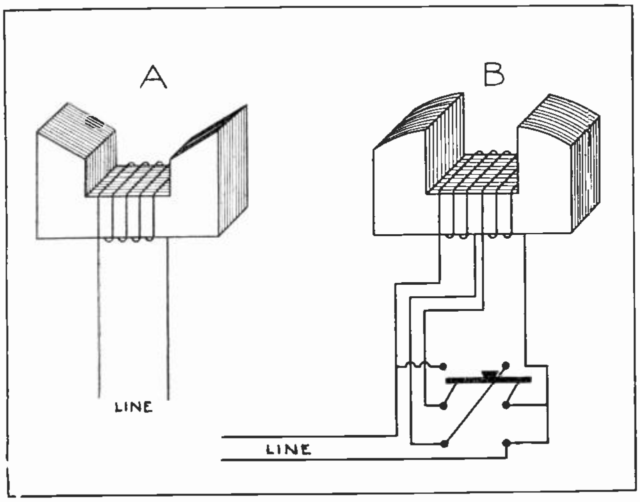

Fig. 33. Two types of "growlers". The one at "A" is for testing armatures, and the one at "B" for use inside of stator cores. Note the switch and double coil arrangement of the growler at "B", which can be used to connect the coils in series or parallel to vary the strength of the growler flux.

right angles to the growler flux. This secondary current, which is flowing in the armature coil will set up alternating flux around it and in the teeth or edges of its slots.

Now, if we hold over the opening of this slot a thin piece of steel, such as a hacksaw blade, the steel will vibrate rapidly. A short circuit is the only fault that will give this indication, so we see that this method is a very simple one for locating shorted armature coils.

It is best to make all tests with a growler on coils that are in the same plane of the growler flux; so, as we test from one slot to the next, the armature should be rotated, in order to make the tests on all coils in the same position. Sometimes it is difficult to rotate the armature without turning off the current from the growler coil.

A low-reading ammeter, with a scale ranging from 2½ to 10 amperes, is quite commonly used with a growler. A rheostat should be connected in series with a meter and a pair of test leads, as shown in Fig. 34. These test leads consist of two pieces of flexible wire several feet long to the ends of which are attached a pair of sharp test points or spikes. Sometimes these points are made of flat spring steel or brass and are attached to a wood or fibre hand-piece in a manner that permits them to be adjusted close together or farther apart. This makes it convenient to test adjacent commutator bars or bars farther apart.

If these test leads are placed across a pair of adjacent commutator bars which connect to a coil lying in the growler flux, we will obtain a definite reading on the ammeter. If we continue around the commutator, testing pairs of adjacent bars while rotating the armature to make the test on coils which are in the same plane, each pair of bars should give the same reading. In the case of a faulty coil the reading may either increase or decrease, depending on the nature of the fault.

46. GROWLER INDICATIONS ON WAVE WINDINGS

When testing wave-wound armatures, if one coil is shorted the indication will show up at four places around the armature. Fig. 35 shows a winding for a four-pole wave armature in position for testing in a growler. The heavy lines represent two coils which complete a circuit between adjacent commutator bars, 1 and 2. The top side of one of these coils and the bottom side of the other connect at bar 10. It will be seen from this diagram that a short circuit between bars 1 and 2 would cause our steel strip to vibrate over the four slots shown by the small double circles.

Practically all four-pole automotive armatures are wave-wound, so it is well to remember that a short between any two of their bars will be indicated at the four places around the armature.

47. COMMON ARMATURE TROUBLES

In addition to short circuits a number of the other common troubles are as follows: **grounded coils or commutator bars, open coils, shorts between commutator bars, and reversed coil-leads.** In addition to the growler, which can be used to locate any of these faults, we can also use a galvanometer and dry cell to locate several of these troubles by testing at the commutator bars. This method will be explained a little later.

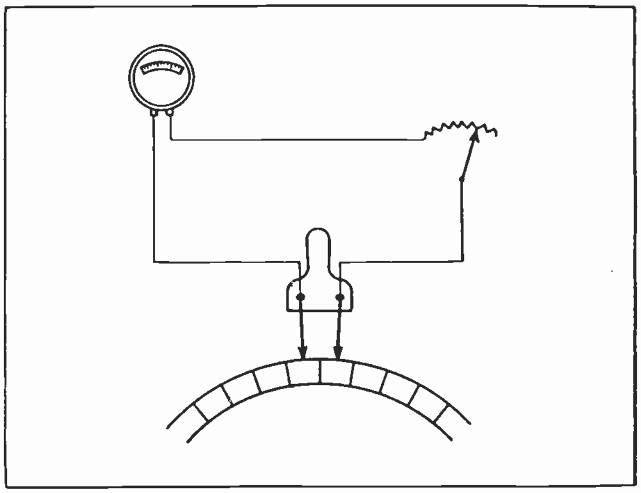

Fig. 34. This sketch shows connections of an ammeter and rheostat with test points on a "hand-piece". Meter and test leads of this sort are used for locating faults in armature windings.

Fig. 36 is a simplified drawing of a two-pole, 24-coil, lap winding in which are shown a number of the more common faults which might occur in armature windings, as follows:

Coil 1 is short-circuited within the turns of the coil.

Coils 20 and 21 have their terminals loose in the commutator bars.

Coil 19 has an open circuit.

Coil 5 is connected in reverse order.

Coil 12 is grounded to the shaft or core of the armature.

Coils 6 and 9 are shorted together.

Coils 15, 16 and 17 are properly connected in relation to each other, but have their leads transposed or connected to the wrong commutator bars.

Coil 13 has a short between its commutator bars.

The commutator bar to which coils 2 and 3 are attached is grounded to the shaft.

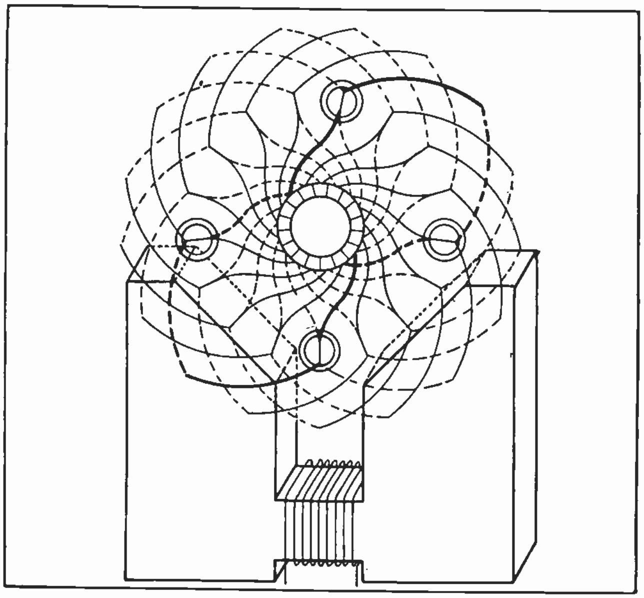

Fig. 35. The above diagram shows the coils of a four-pole wave armature which is in place in a growler for testing.

Now let's cover in detail each of these faults and the exact method of testing and locating them.

48. SHORT CIRCUITS

In Fig. 36 we found that coil 1 had a short circuit within the coil, which is probably the result of broken or damaged insulation on the conductors. To test for this fault, we will place the armature on the growler and close the switch to excite the growler coil. Place the steel strip over an armature slot which is at least the distance of one coil span from the center of the growler core. Now turn the armature slowly, keeping the steel parallel with and over the slots. When the slot containing coil 1 is brought under the steel, the induced current flowing in this local short circuit will set up flux between the teeth of this slot, which will attract and repel the steel strip, causing it to vibrate like a buzzer. This indicates that that coil is short circuited. Mark this slot with a piece of chalk and proceed with the test. Again rotate the armature slowly and test each slot, at all times keeping the strip over slots that are in the same position with respect to the growler. When the slot which contains the other side of the shorted coil is brought under the steel strip, it will again vibrate. Mark this slot. The two marked slots should now show the span of the exact coil which is shorted.

If we find no other slots which cause the steel to vibrate, we know there is only one short in the armature. This test will apply to armatures of any size, regardless of the number of poles in their winding, and whether they are wound lap or wave.

In order to locate on the commutator the bars to which the leads of the shorted coil are attached, adjust the test points of the hand-piece so they will span adjacent commutator bars. Place these test points on two adjacent bars, and adjust the rheostat until the meter reads about ¾ of its full scale reading. Note this reading carefully and, by rotating the armature, check the readings of all the other bars in this same position.

When the test leads are placed on the bars that connect to the shorted coil, the reading will be lower than the other readings obtained. How low will depend on how many turns of the coil are short circuited. If the short is right at the leads or commutator bars and is of very low resistance, no reading will be obtained between these bars.

49. LOOSE COIL LEADS

In testing for loose coil leads, such as shown on coils 20 and 21 in Fig. 36, the steel strip would not vibrate at any slot due to this fault; but, in testing between commutator bars with the hand-piece, when the ammeter leads are placed on the commutator bars to which these coils are connected, the reading between them and adjacent bars would drop to zero, indicating an open circuit.

50. OPEN CIRCUIT

In testing for an open circuit, such as shown in coil 19 in Fig. 36, the steel strip would, of course, give no indication of this fault. So we must locate it by again testing around the commutator with the hand-piece. When these leads are placed across the bars to which the open coil is connected, we will get a very low reading. The reason that any reading at all is obtained is because there are always two paths for the current to travel through the winding, unless it is open at some other coil also.

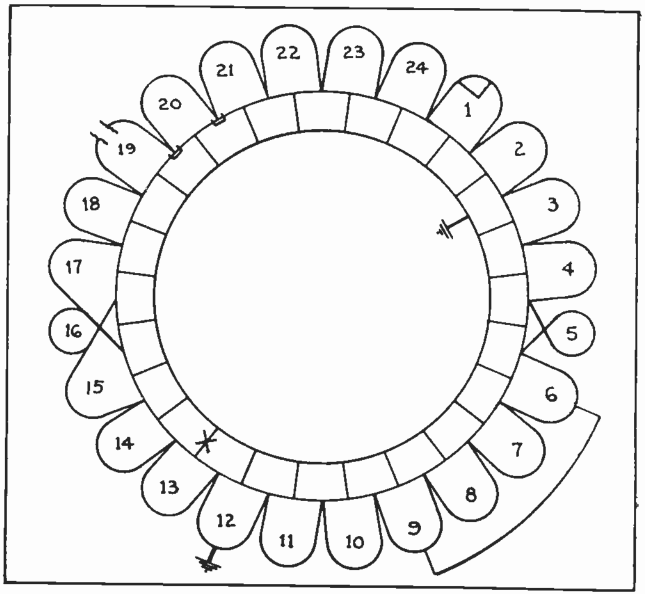

Fig. 36. This diagram of a two-pole lap winding shows a number of the more common faults which may occur in armature coils and at the commutator segments.

With an open circuit only at coil 19, we would still have a circuit through all the other coils in series. The voltages induced in the coils which lie in the active position for the growler flux would tend to neutralize each other, but there is often a slightly unbalanced condition in the windings which would allow a little current to flow through the ammeter.

If there are three coils of the armature in the active flux of the growler and one side of coil 19 is one of these, then there will be three good coil sides working against two good coil sides with their induced voltages; and, since coil 19 is open circuited, the reading would be about 1/3 normal. The exact amount of this reading, however, will depend upon the pitch of the coils and the size of the armature. The main point to note is that one open circuit in an armature does not necessarily give a zero reading, unless the coil sides on each side of the test points are perfectly balanced electrically.

51. REVERSED COIL

In testing for a reversed coil such as No. 5 in Fig. 36, the steel strip will not vibrate at any slots, and testing from bar to bar with the ammeter leads on adjacent bars will not show up this fault either; because the induced current is alternating and the motor will not indicate the reversed polarity of the coil. So, in testing for reversed coils, we should spread the test points on the hand-piece far enough apart so they will touch bars 1 and 3. In this manner we will get a reading of two coils in series. Then, when we place the test points on bars which are connected to coils 4 and 5, or 5 and 6, two coils will be in series in each case; but, as the voltage in one will be opposite in direction to that in the other, the reading will be zero.

So, in testing for reversed coils we test two coils at a time by spreading the test leads apart to span an extra commutator segment, and the indication for the reversed coils will be a zero reading.

52. GROUNDED COILS

Coil 12 in Fig. 36 is grounded. The steel strip or vibrator will not indicate this fault, nor will the bar to bar test with the ammeter leads. To locate a ground we should place the test leads one on the commutator and one on the shaft or core of the armature. If the first test is made between the bar of coil 8 and the shaft, we would obtain a very high reading on the ammeter, because this would give the reading of the 4 coils in series between the grounded coil and this bar.

As we test bars closer to the grounded point the reading will gradually decrease, and the two bars that give the lowest reading should be the ones connected to the grounded coil. The sum of the readings from these two bars to the shaft should equal the reading of a normal coil.

53. SHORTS BETWEEN COILS

In Fig. 36 coils 6 and 9 are shorted together, which places coils 6, 7, 8, and 9 in a closed circuit, through the short and the coil connections to the commutator bars. In this case the steel strip will vibrate and indicate a short circuit over each of the slots in which these coils lay. A bar to bar test with the ammeter leads would not give a definite indication, but the readings on these bars would be lower than normal.

54. REVERSED LOOPS

In the case of coils 15, 16, and 17 in Fig. 36, which are properly connected to each other but have their leads transposed or placed on the wrong commutator bars, the steel strip will not vibrate or give any indication. The bar to bar test with the ammeter leads would, however, show double readings between bars 1 and 2, normal readings on bars 2 and 3, and double reading again on bars 3 and 4. This indicates that the coils are connected in the proper relation to each other, but that their leads are crossed at the commutator bars.

55. SHORTED COMMUTATOR SEGMENTS

In the case of coil 13 in Fig. 36, which is short circuited by a short between its commutator bars, the steel strip would vibrate and indicate a short circuit over both slots in which this coil lies. The bar to bar test of the ammeter will give a zero or very low reading across these two bars, depending upon the resistance of the short circuit between them.

If the winding is connected lap, the short would be indicated in two places on the core; and if it is connected wave for four poles, it would be indicated in four places on the core.

56. GROUNDED COMMUTATOR SEGMENTS

The commutator bar to which coils 2 and 3 are connected in Fig. 36, is grounded to the shaft. The steel strip will not indicate this fault. Testing with the ammeter leads between other commutator bars and the shaft would show high readings on the meter; but, as we test bars that are closer to the grounded one, the reading falls lower and lower, and will be zero when one test lead is on the grounded bar, and the other on the shaft.

If an absolute zero reading is obtained it indicates the ground is in the commutator bar.

57. GALVANOMETER TESTS ON ARMATURES

We have mentioned that a galvanometer and dry cell can be used to test armature windings for open circuits and short circuits in coils. You will recall, from the description of a galvanometer in an earlier section on elementary electricity, that this instrument is simply a very sensitive voltmeter which will read a fraction of one volt. Fig. 37 shows a method of making galvanometer tests on armatures. Two leads from a dry cell should be held against bars on opposite sides of the commutator and kept in this position as the armature is rotated. This will send a small amount of direct current through the coils of the winding in two paths in parallel.

If the positive lead in Fig. 37 is on the right, a current will flow from this lead through the commutator bar to the right side of the winding. If all coils of the winding were closed and in good condition, the current would divide equally, part flowing through the top section of the winding to bar 3 and the negative lead, and the other part flowing through the lower section of the winding to the same bar and lead. When this current is flowing through the armature and we test between adjacent bars with the galvanometer, the instrument reads the voltage drop due to the current flowing through the resistance of each coil. So the galvanometer test is quite similar to that with the ammeter leads and growler.

In testing for an open circuit with the galvanometer leads placed on adjacent bars connected to good coils, there will be no reading in the section of the winding in which the open coil is located; but when these leads are placed across the bars connected to the open coil, the needle will probably jump clear across the scale, because at this point it tends to read practically the full battery voltage. Of course, if there are two open circuits in this half of the armature, no reading will be obtained at any pair of bars. This is a good indication that there is more than one open. If a test is made all the way around the commutator and no open circuits are present, the galvanometer should read the same across any pair of bars. You should be careful, however, to secure at all times a good contact between these test leads and the bars, and also be sure that the battery leads make good connection to the commutator as the armature is rotated. Otherwise variations in the readings will be obtained.

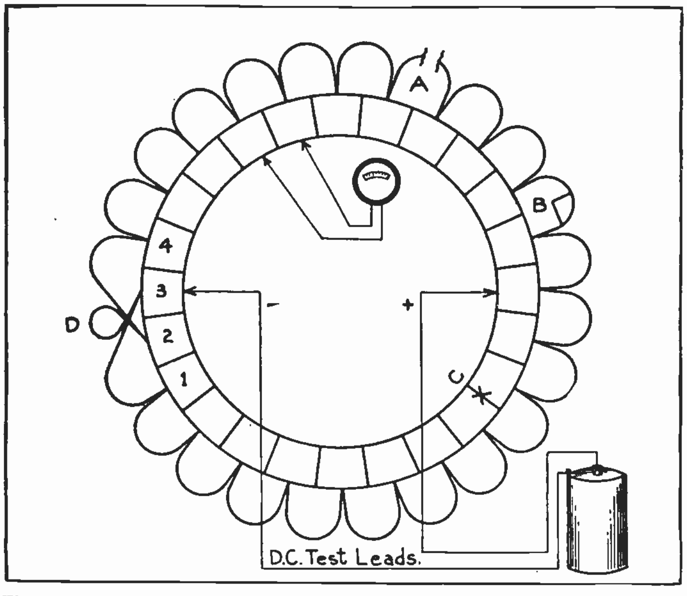

Fig. 37. This diagram shows the method of testing with a galvanometer and dry cell to locate various faults in an armature.

A lower reading than normal between any two bars will indicate a shorted coil, and a zero reading indicates a short between two commutator bars. When galvanometer leads are placed on bars 2 and 3, which are connected to coils with their leads transposed, the reading will be normal; but in testing between bars 1 and 2, or 3 and 4, the reading will be double. This indicates that the leads at bars 2 and 3 are the ones reversed.

The methods and indications described for each of the foregoing tests should be carefully studied until you are quite sure you understand the principles in each case. It is not expected that you will be able to remember each of these tests until you have actually tried them a number of times. However, with the instructions given in the foregoing paragraphs, you need not hesitate to undertake any of these tests, if you have this material on hand to refer to during the first few times you make them.

58. CUTTING OUT FAULTY COILS

In many cases when a machine develops some fault in the coils of its armature, it is inconvenient to take it out of service for complete rewinding or for the amount of time required to replace the defective coils with new ones. At times like this, when it is extremely important that a machine be kept in service in order not to stop or delay production on the equipment it operates, a quick temporary repair can be made by cutting the faulty coils out of the armature circuit. This is done by using a jumper wire of the same size as the conductors in the coils, and which should be soldered to the same two bars to which the defective coil was connected. This jumper will then complete the circuit through this section of the armature, and will carry the current that would normally have been carried by the defective coil.

Fig. 38 shows the manner in which an open circuit coil can be cut out with such a jumper. For each coil that is cut out of a winding a slightly higher current will flow through the other coils of that circuit. The number of coils that can safely be cut out will depend on the position in which they occur in the armature.

In some cases several coils may be cut out, if they are equally distributed around the winding; but if several successive coils became defective and were all cut out with a jumper, it might cause the rest of the coils in that circuit to burn out.

Other factors that determine the number of coils which can be cut out in this manner are: the number of coils per circuit, the amount of load on the motor or generator, and the size of the machine. If the defective coil is grounded, its two ends should be disconnected from the commutator bars before the jumper is soldered in place. Shorted coils should be cut at the back end of the armature and these cut ends well taped. The jumper wire should be well insulated from the leads of other coils.

Repairs of this type should be considered as only temporary and, as soon as the machine can be conveniently taken out of operation, the defective coils should be replaced with new ones; or the armature rewound, if necessary.

Keep well in mind this method of making temporary repairs, as there are frequent cases on the job when the man who knows how to keep the machinery running through important periods of production or operation can make a very favorable impression on his employer by demonstration of this ability.

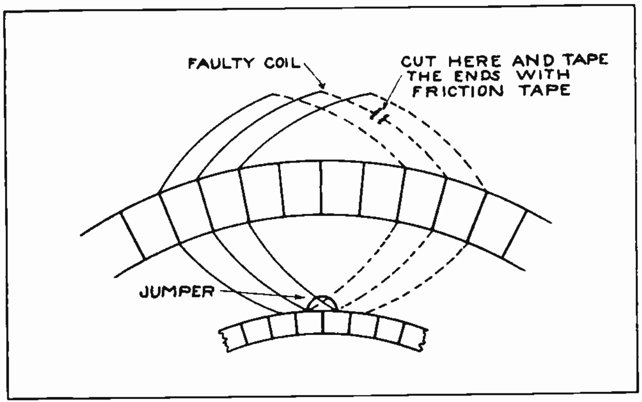

Fig. 38. The above diagram shows the method of cutting out a defective coil, and completing the circuit through the winding with a jumper at the commutator bars to which this coil connects.

If you have carefully studied the material in this section, the knowledge you have obtained of the principles of D. C. machines and their windings will be of great value to you.

While you are actually winding armatures in the department in the shops, you will be able to observe and put into practice many of the important things covered in this Reference Set.

If you get the important points covered in the intensely practical lectures on this subject, and do your work on the windings thoughtfully and carefully, you should be able to quite easily rewind or repair armatures, or locate their troubles when necessary on the job.

Remember that the important points are to get the proper number of turns of proper sized wire per coil, proper coil and slot insulation, and proper connections to the commutator.

By referring to this Reference Set and your lecture and shop notes, you will find dependable information on all these points.

Be sure to get acquainted with the use of the growler, and methods of testing armatures while you are in the Armature Department in the shops; and remember that care and neatness are essential to produce satisfactory armature windings which will be free from faults when completed.

COYNE
Electrical School
CHICAGO ~ ~ ILLINOIS
ESTABLISHED 1899

ARMATURE WINDING AND TESTING

Section Two

Principles of A C Motors and Generators
Single and Polyphase Machines
Winding Stators
Connecting Stators
Star and Delta Connections
Reconnecting for Changes in Voltage
Speed, Frequency, Phases
Insulating Varnish, Baking
Stator Troubles and Tests

ALTERNATING CURRENT WINDINGS

The previous section covered the windings for D. C. generators and motors only. This section will deal with the principles and windings of A. C. machines.

Alternating current is very extensively used for light and power purposes, and most of the large power plants generate alternating current because it is so much more economical than D. C. to transmit over long lines. The reason for this will be explained in a later section on alternating current.

The very general use of A. C. in industrial plants and power plants makes it very important for one to know these principles of A. C. machines and the methods of winding, connecting, and testing them.

59. PRINCIPLES OF A. C. GENERATORS

We have learned that voltage can be generated in a conductor by moving it through a magnetic field, and that alternating current will always be generated in the windings of a D. C. generator, because during rotation the conductors are continuously passing alternate N. and S. poles.

Let us review this principle briefly, to be sure we have it well in mind as we start the study of A. C. machines.

In the Elementary Section on magnetic induction we learned that the direction of induced voltage in any conductor depends on the polarity of the field or direction of the lines of force, and the direction of movement of the conductor.

In Fig. 39-A and B we have another illustration of this to examine closely. At "A" the lines of force from the field poles are passing downward and the conductor is being moved to the right. This will induce in the wire a voltage that will tend to cause current to flow in at the end we are facing, or away from us, if this conductor is part of a closed circuit. Check this with the right-hand rule for induced E. M. F. in generators.

This rule is here repeated for your convenience. **Hold the thumb, forefinger, and remaining fingers of your right hand, all at right angles to each other. Then, with your fore-finger pointing in the direction of the flux, and your thumb in the direction of the conductor movement—the remaining fingers will point in the direction of the induced E. M. F.**

Try this rule also with Fig. 39-B, where the conductor is moving in the opposite direction, through the same direction of magnetic field; and you will find the induced voltage has reversed with the direction of the conductor movement.

The circular arrows around the conductors indicate the direction of the lines of force which will be set up around them by their induced currents. Check this also by the method mentioned in an earlier section, of considering the field lines as moving rubber bands rubbing the conductors, and setting up the new or induced lines in the direction the bands would revolve a pulley, etc. Also note the symbols used to indicate the direction of induced E. M. F. in the conductors: + for voltage in, and the dot for voltage out.

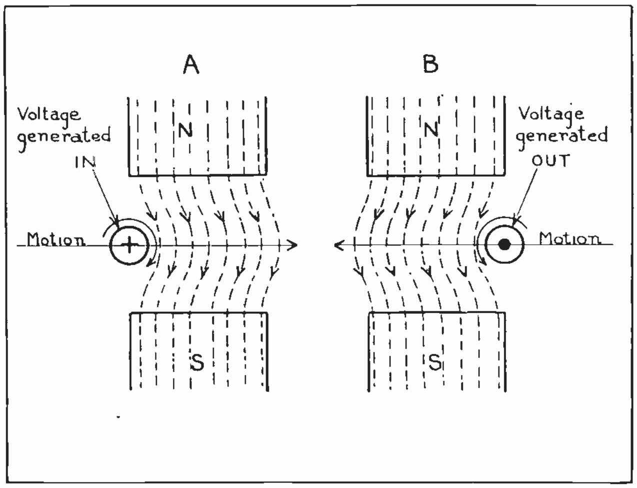

Fig. 39. This diagram illustrates the method of producing E.M.F. in conductors by cutting them through magnetic lines of force. Note carefully the direction of the induced voltage at both "A" and "B".

In Fig. 40-A we have two conductors of a coil, mounted in slots of an armature and revolving clockwise. In their position at "A" the conductors are not generating any voltage, as they are in the neutral plane and are not cutting across lines of force. At "B" the direction of induced voltage will be "in" at conductor "F" and "out" at "G"; so if the conductors are connected together at the back of the armature their voltages will add together.

In Fig. 40-C the conductors are both in the neutral plane again, so their induced voltage once more falls to zero.

At "D" conductor "G" is passing the north pole and conductor "F" is passing the south pole, so they are both moving through the field flux in opposite directions to what they were at "B", and their induced voltage will be reversed. At "E" both conductors are again back in the neutral plane, or at the point they started from.

A curve indicating the voltage generated is shown under these various steps of generation in Fig. 40. At "A" the voltage curve is starting at the zero line, as the conductors start to enter the field flux. At "B", where the conductors are cutting through the dense field directly under the poles, the curve shows maximum positive voltage. From this point it falls off gradually as the conductors pass out of the flux at the poles, until it again reaches zero at "C". Then, as the conductors each start to cut flux in the opposite direction, the curve shows negative voltage in the opposite direction or below the line, reaching maximum value at "D". At "E" the negative voltage has again fallen to zero.

60. CYCLES AND ALTERNATIONS

This completes one revolution with the simple two-pole generator and also completes what we term one **Cycle** of generated voltage. The single positive impulse produced by the conductor passing one complete pole, and shown by the curve from "A" to "C", is called one **Alternation.** It takes two alternations to make one cycle. Therefore, each time a conductor passes one north and one south pole it produces one cycle.

There are 360 **Mechanical Degrees** in a circle, or in one revolution of a conductor on an armature; and in generators we say that a conductor travels **360 Electrical Degrees** each time it passes two alternate field poles and completes one cycle. So **One Cycle consists of 360 Electrical Degrees,** and **One Alternation consists of 180 Electrical Degrees.**

In a machine having more than two poles, it is not necessary for a conductor to make a complete revolution to complete a cycle, as **One Cycle is produced for each pair of poles passed.** So a four-pole machine would produce two cycles per revolution; a 12-pole machine, 6 cycles per revolution; etc.

61. FREQUENCY OF A. C. CIRCUITS

Alternating current circuits have their **frequency** expressed in cycles per second, the most common frequencies being 25 and 60 cycles per second.

If frequency is expressed in cycles per second and if a conductor must pass one pair of poles to produce a cycle, then the frequency of an A. C. generator depends on the number of its poles and the speed of rotation.

For example, if a four-pole machine is rotated at 1800 R. P. M., the frequency of the current it produces will be 60 cycles per second. Its conductors will pass two pairs of poles per revolution, or 1800 × 2 = 3600 pairs of poles per minute. Then, as there are 60 seconds in a minute, 3600 ÷ 60 = 60 cycles per second.

A generator with 12 poles would only need to rotate at 600 R. P. M. to produce 60 cycles per second. The conductors in such a machine would pass six pairs of poles per revolution; or at 600 R. P. M. they would pass 6 × 600 or 3600 pairs of poles per minute. And again, 3600 ÷ 60 = 60 cycles per second.

The symbol for frequency is a small double curve like a sine wave, or ~. Thus 60 ~ means 60 cycles per second.

The speed at which A. C. motors will operate depends on the frequency of the circuit they are connected to and the number of their poles. This will be more fully discussed later.

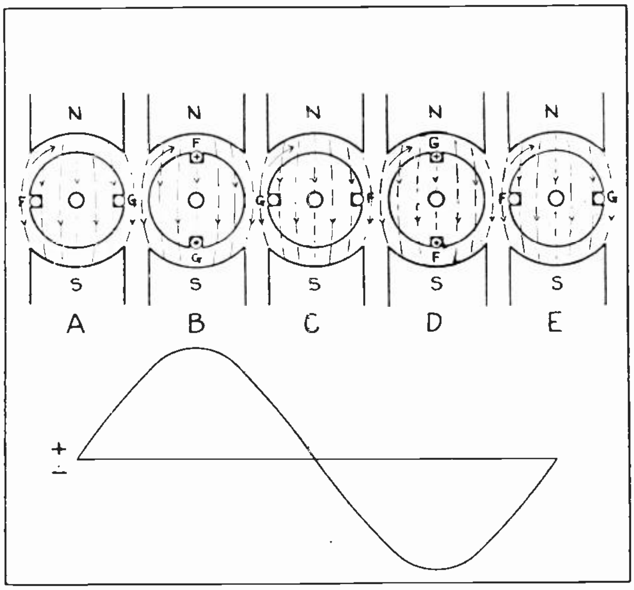

Fig. 40. The above diagram shows step by step the development of a complete cycle of alternating current voltage. Compare each of the generator sketches with the voltage of the curve directly beneath it.

62. REVOLVING FIELD ALTERNATORS

Alternating current generators are commonly called **Alternators.** So far we have discussed generators with their conductors revolving on an armature through stationary field flux. Now, why wouldn't it work equally well to have the armature conductors stationary and revolve the field, causing the lines of force of the moving field poles to cut across the conductors?

This is exactly what is done with a great number of A. C. generators or alternators; and, while some of the smaller ones are made with revolving armatures, most of the larger ones are of the **revolving field** type.

This type of construction has two very important advantages for large power plant alternators. The first of these advantages is that if the armature conductors are stationary the line wires can be permanently connected to them and it is not necessary to take the generated current out through brushes or sliding contacts. This is quite an advantage with the heavy currents and high voltages produced by modern alternators, many of which are designed to supply from several hundred to several thousand amperes, at voltages from 2300 to 13,200 and higher.

Of course, it is necessary to supply the current to the revolving field with slip rings and brushes, but this field energy is many times smaller in amperes and lower in volts than the main armature current.

The other big advantage is that the armature conductors are much larger and heavier than those of the field coils, and much more difficult to insulate because of their very high voltage. It is, therefore, much easier to build the armature conductors into a stationary element than it is in a rotating one.

The field, being the lighter and smaller element, is also easier to rotate and reduces bearing friction and troubles, as well as air friction at high speeds.

With large revolving field alternators, the stationary armature is commonly called the **Stator,** and the rotating field is called the Rotor.

63. SINGLE PHASE CURRENTS

Fig. 41 shows a sketch of a simple revolving field alternator, with one coil in the slots of the stator or stationary armature. The circles in the slots show the ends of the coil sides, and the dotted portion is the connection between them at the back end of the stator. Inside the stator core is a double two-pole field core with its coil, and mounted on a shaft so it can be revolved.

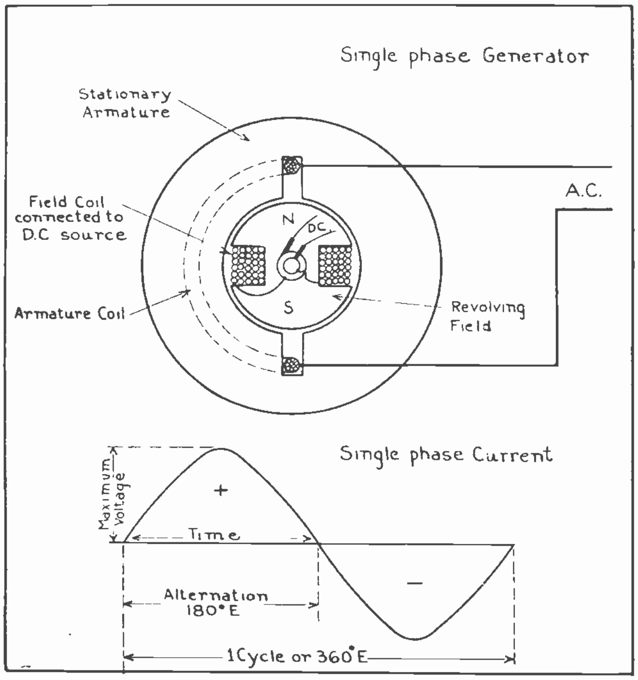

Fig. 41. Sketch of a simple single-phase alternator of the revolving field type, showing a single coil in the stator slots. The curve at the bottom of the sketch shows the single-phase alternating current which will be produced when the field revolves past the stator coil.

When direct current is supplied to the field core through the slip rings and brushes shown, the core becomes a powerful electro-magnet with flux extending from its poles into the stator core. Then, as the field is revolved the lines of force from its poles revolve with them and cut across the conductors in the stator slots.

As each coil side is passed first by the flux of a north pole and then a south, the induced E. M. F. and current will be alternating, as it was with the revolving armature type previously shown. The curve underneath the generator shows the complete cycle which will be produced by one revolution of the two pole field; so this machine would have to revolve at 3600 R. P. M. to produce 60-cycle energy.

Revolving fields are made with four or more poles, to produce 60-cycle energy at lower speeds.

Fig. 42 shows a large alternator of the revolving field type, with 36 poles. Each revolution of this field will bring 18 pairs of poles past any given coil, and so produce 18 cycles per revolution. Then, if its speed is 200 R. P. M., 200 × 18 = 3600 cycles per minute, or 60 cycles per second.

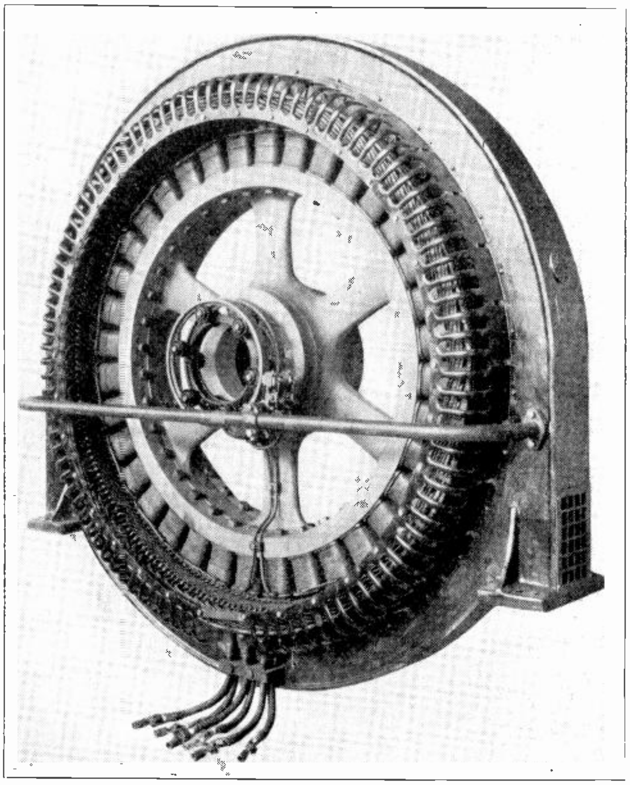

Fig. 42. This photo shows a large 36-pole alternator of the revolving field type. Examine its construction carefully as you study the explanation given on this page.

Note carefully in this figure the slip rings, brushes, and wires which carry the D. C. from the rings to the field coils. Also note the armature coils arranged in the slots of the stator, and at the bottom the cables by means of which the line leads are attached to these coils.

The generator shown in Fig. 41 will produce what is known as **Single Phase** alternating current, as shown by the curve in this same figure.

Single-phase A. C. flows in a simple two-wire circuit, and consists of alternations 180 degrees apart, or current that continuously reverses in direction and varies in amount.

This current first flows out in the top wire of the line and back in the lower one; then dies down, reverses, and flows out in the bottom wire and back in the top one. Or, we might say, it is just one set of continuously recurring alternations.

Even if the generator in Fig. 41 had a number of stator coils connected in series and just two leads connected to the group, it would still deliver single-phase current.

64. TWO PHASE CURRENTS

Generators are also made to produce **2-phase** and **3-phase** currents. Circuits supplied by 2 and 3-phase energy are often called **polyphase** circuits, meaning that their currents are divided into more than one part.

Fig. 43 shows a sketch of a simple 2-phase alternator, which has two separate coils placed in its stator at right angles to each other; or displaced 90 degrees from each other.

As the field of this generator revolves it will induce voltage impulses in each of these coils, but these impulses will not come at the same time, because of the position of the coils.

Instead, the voltages will come 90 electrical degrees apart, as shown in the curves in Fig. 43. The curve "A" shows the voltage generated in coil "A" as the poles pass its sides. As these poles rotate 90° farther their flux cuts across coil "B" and produces the voltage impulses shown by curve "B", which are all 90° later than those in curve "A".

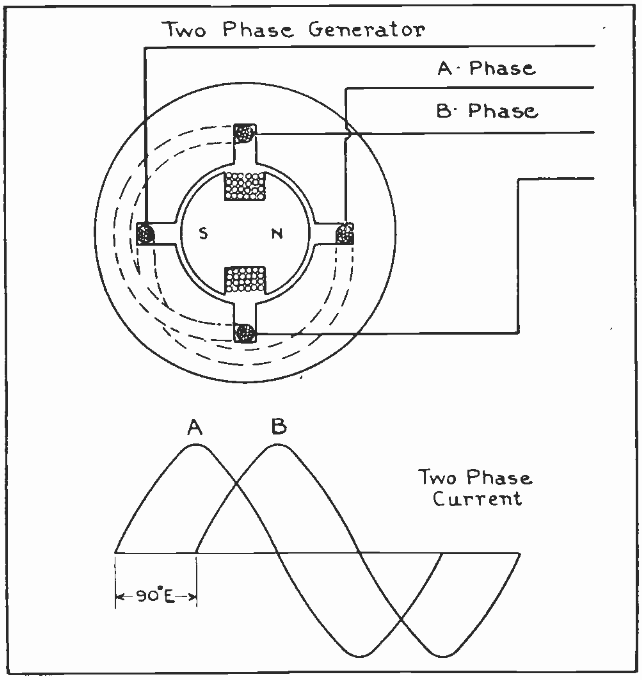

Fig. 43. Sketch of a simple two-phase A.C. generator or alternator. The curve at the bottom of the sketch shows the two-phase current that will be produced when the field revolves past the two coils in the stator.

These two separate sets of impulses are each carried by their own two-wire line circuits as shown in the diagram.

So we see that a two-phase circuit is simply a circuit of two parts, or having two sets of alternations occurring 90 degrees apart. In the curve you will note that these alternations or impulses overlap each other, and that while one is at zero value the other is at maximum value. So with a circuit of this type there is always current flowing in one phase or the other as long as the circuit is alive.

This feature is quite an advantage where the energy is used for power purposes, as these overlapping impulses produce a stronger and steadier torque than single-phase impulses do.

For this same reason **three-phase** energy is still more desirable for motor operation and power transmission, and is much more generally used than two-phase.

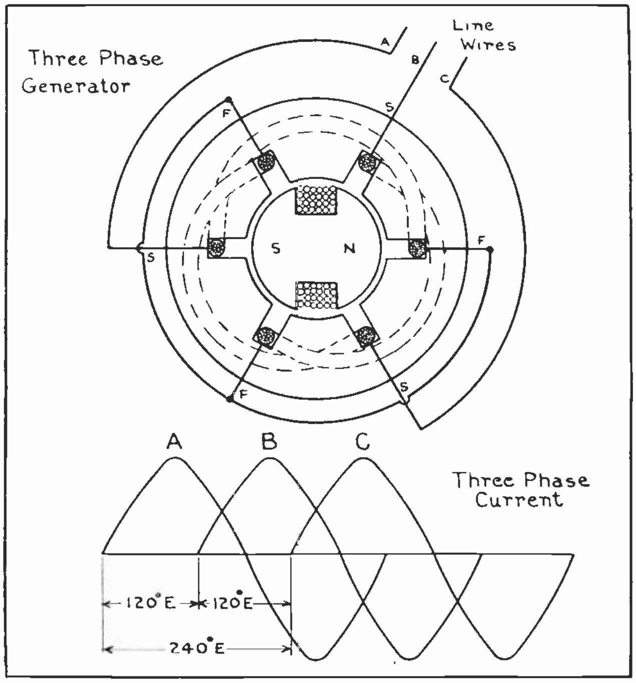

Fig. 44. This sketch shows the arrangement of the stator coils in a simple three-phase alternator and beneath it the curves for three-phase energy.

65. THREE-PHASE CURRENTS

Fig. 44 shows a sketch of a simple three-phase alternator, with three coils in its stator, and spaced 120 electrical degrees apart.

As the field poles revolve past coils "A", "B", and "C" in succession, they induce voltage impulses which are also 120 degrees apart, as shown in the curves in the figure.

The line leads are taken from the coils at points 120 degrees apart and the other ends of the coils are connected together at "F". This type of connection is known as a **Star** connection of the coils to the line. Another common connection for three-phase windings is known as the **Delta** connection. Both of these will be explained later.

The principal points to note are that a three-phase circuit is one with three parts, or three separate sets of alternations occurring 120° apart and overlapping each other. These impulses are carried on three line wires, and the current flows first, out on wire "A" and in on wires "B" and "C"; then out on wire "B" and in on wires "A" and "C"; then, out on wires "C" and in on wires "A" and "B"; etc.

Additional features of single-phase and polyphase circuits and machines will be covered later. But,

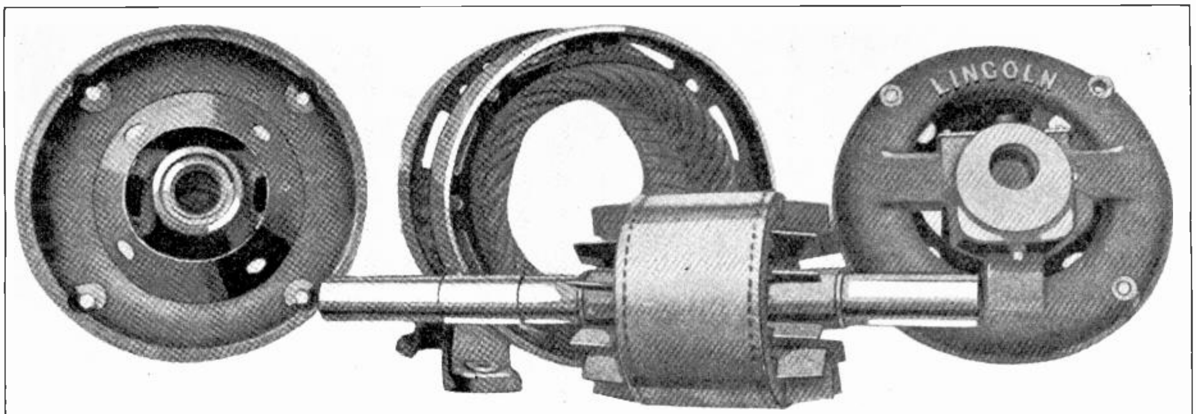

Fig. 45. Above are shown the more essential parts of an A.C. induction motor. Note carefully the construction of each part and the names by which they are called.

now that you know the difference between these forms of alternating current, you will be able to understand the various A. C. windings much easier.

66. CONSTRUCTION OF A. C. MOTORS

The most common type of A. C. motor is known as an **Induction Motor.** This name comes from the fact that the currents in the rotor are induced in it by the flux of the stator coils.

Fig. 45 shows the more important parts of an A. C. induction motor, with the names of each. Note that the stator coils are placed in the slots around the inside of the stator core very much as the coils of a D. C. armature are placed in slots around the outside of the armature.

67. ROTORS

A. C. induction motors have two common types of rotors, known as **Squirrel-Cage** rotors and **Phase-wound** rotors.

The rotor shown in Fig. 45 is of the squirrel-cage type; and, instead of having wire windings, it has heavy copper bars buried in closed slots around its surface and all connected together by rings at each end.

Fig. 46 is a cut view of such a rotor, showing how the bars are imbedded in the core iron. The end rings are made of copper or brass; or, in some cases, of aluminum. The short blades on the end rings act as fans and set up an air draft to cool the rotor and machine windings while the motor is in operation.

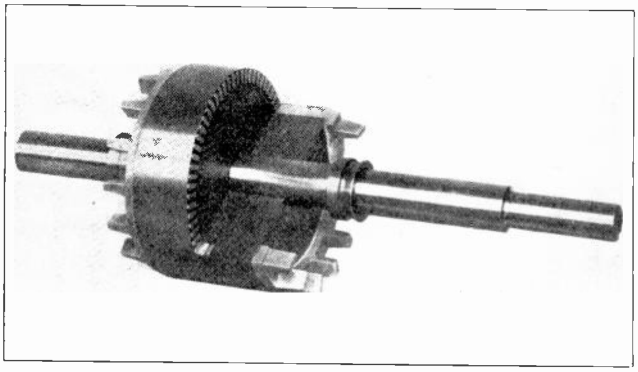

Fig. 46. This view shows a sectional view of a squirrel-cage rotor for an A.C. induction motor. Note the manner in which the copper bars are imbedded in the surface of the core.

Fig. 47 shows a slightly different type of squirrel-cage rotor, in which the ends of the bars can be seen projecting from the core ends. This rotor is also equipped with fan blades for ventilating the machine, and you can note the air space left between the laminations of the core. These spaces are also for cooling purposes.

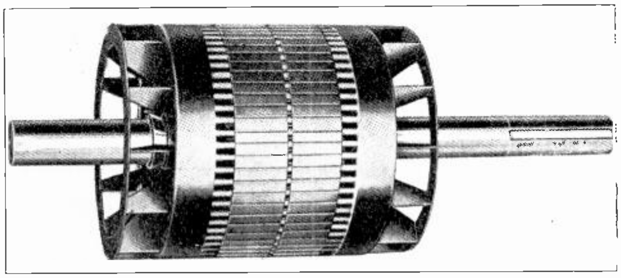

Fig. 47. Another style of squirrel-cage rotor showing the bars of the winding and also the ventilating fans.

The purpose of the end brackets shown in Fig. 45 is to support the bearings in which the rotor shaft turns. These bearings must always be in such condition, and the brackets so lined up, that they will support the rotor so that it does not rub or touch the stator core.

Fig. 48 shows in greater detail some of the smaller parts used in the construction of A. C. motors. In the center is shown the shaft to which the rotor core is keyed; and above this are a bearing sleeve, shaft key, oil ring, and stator coil. At the left end of the shaft is shown a rotor lamination, and beneath it an end ring and rotor bar. In the upper right-hand corner is a stator lamination, showing the shape of the slots and teeth; and below this is one of the frame rings used for clamping together and supporting the stator core laminations.

Phase-wound rotors for A. C. induction motors have windings placed in the slots of their cores, similarly to D. C. armatures. Their windings are generally connected wave.

68. STATORS

Stators for A. C. motors are constructed of laminations which are stamped from soft iron. One of these was shown in Fig. 48. The slots are cut on the inside of the stator cores, instead of on the outside as with D. C. armatures.

Two types of these slots are shown in Fig. 49. This view also shows the slot insulation and method of protecting the coils and wedging them into the slots.

In large stators, the groups of laminations are spaced apart to leave an air duct every few inches for cooling the windings and core.

The partly closed slots shown at "A" in Fig. 49 are used on small stators where the wires are fed into the slots a few at a time. The open-type slots as shown at "B" are used on large stators which have their coils wound and insulated before they are placed in the slots.

69. TYPES OF A. C. WINDINGS

Three of the commonly used types of windings for A. C. stators are the **Spiral Type, Lap,** and **Wave** windings.

The spiral-type winding is used very extensively on small single-phase motors.

The poles are wound in a spiral form, as shown in Fig. 50. The wire is started in the two slots to be used as the center of a pole, and after winding the desired number of turns in this coil we continue right on in the same direction in the next pair of slots, with the same wire. In this manner we build up the coils for one pole, working from the center to the outside. Sometimes more than one slot is left empty in the center as the first winding is placed in.

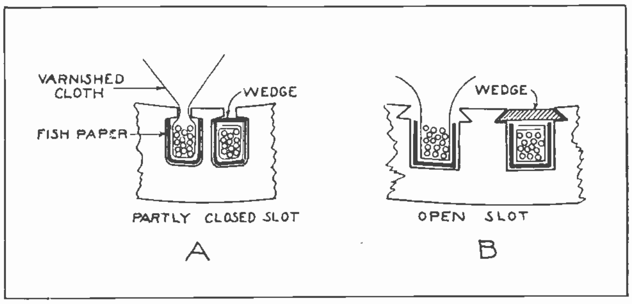

Fig. 49. The above diagram shows two common types of stator slots with the slot and coil insulation in place around the coils. Also note the wedge used for holding the finished coils in place.

70. SKEIN WINDINGS

Another method, which uses what is known as the **Skein Coil** for making spiral windings, is illustrated in Fig. 51.

In this method the long skein coil is first made up of the right number of turns and the proper length to form the several coils. The end of this skein is then laid in the center slots as shown at "A" in Fig. 51, and the long end given one-half

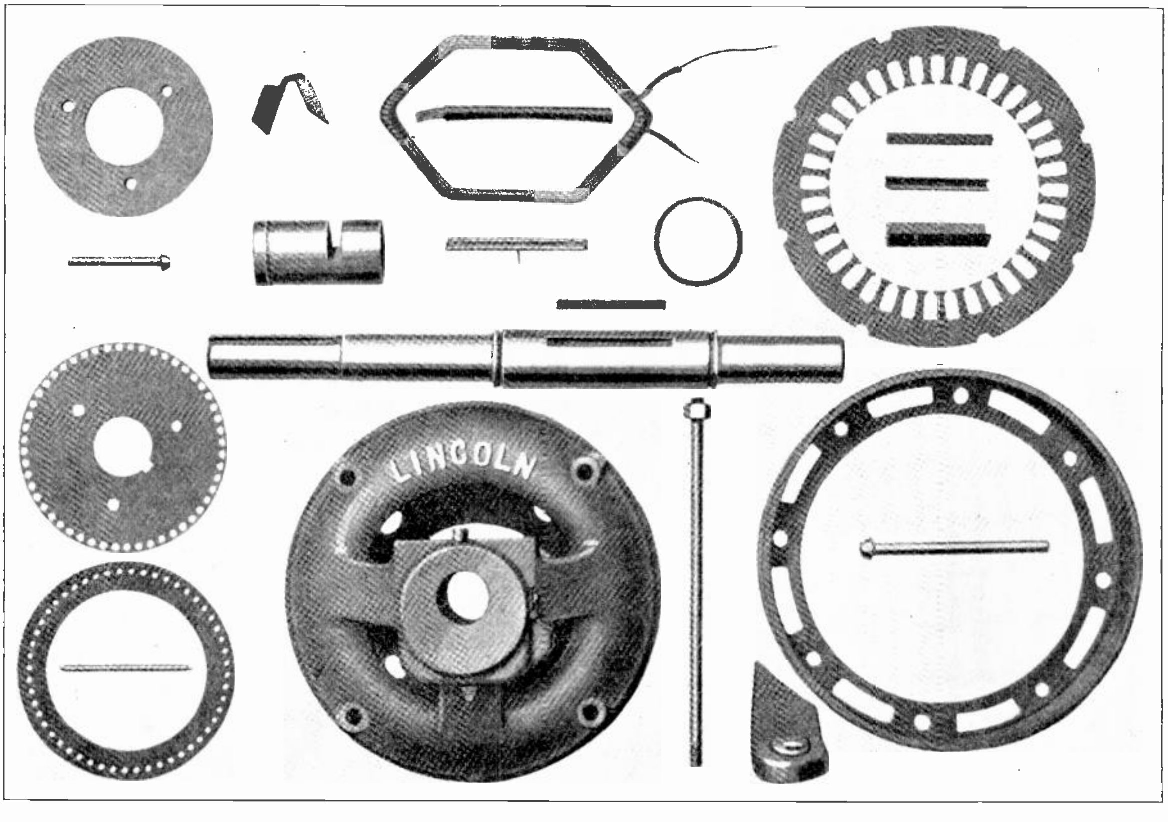

Fig. 48. Here are shown a number of the smaller parts used in the construction of A. C. motors of the induction type. Note the shape of the laminations for both the rotor and stator cores, and compare each of these parts with their explanations given on these pages.

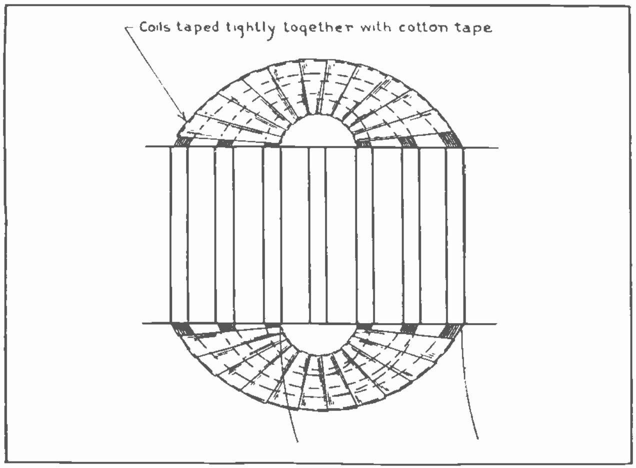

Fig. 50. This diagram illustrates the method of winding the coils for a spiral-type stator winding. Note how the wire continues from one coil to the other, as shown by the dotted lines under the tape at the lower end.

twist near the ends of the slots, as shown at "B". The remaining end is then laid back through the next two slots—at "C"—and again twisted one-half turn so its sides cross near the first coil end. Then the last loop is laid back through the outer two slots to complete the coils for this pole.

Trace the circuit through this finished coil, starting at the left lead, going through each coil, and coming out at the right-hand lead.

This skein method of winding is quite a time-saver where a number of stators of the same size and type are to be wound. After carefully measuring to get the first skein coil the right length, the balance of the coils can be made on the same form, and the stator poles wound very rapidly.

If there are only two or three small stators to be wound, the first method described is generally best.

71. RUNNING AND STARTING WINDINGS FOR SINGLE-PHASE MOTORS

Single-phase A. C. motors of these small induction types generally have two windings called the **Running Winding** and **Starting Winding.** The first winding placed in the slots as we have just described is the running winding. The starting winding is always placed in the slots over the running winding coils after they are all in the slots. This starting winding is usually wound with wire about one-third as large as that used for the running winding, and with about half as many turns. The starting winding coils are displaced 90°, or exactly one-half the width of one pole, from the coils of the running winding.

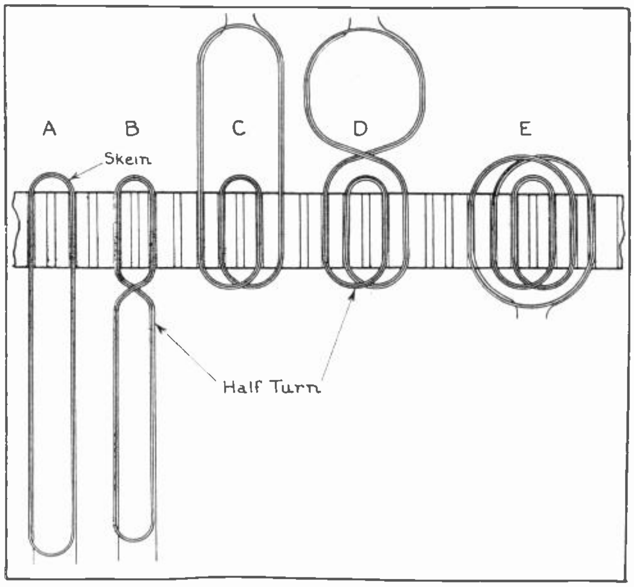

Fig. 51. Skein type windings as shown above are often used to save considerable time when winding a number of stators which are all alike. Note carefully the various steps of twisting the coil and laying it in place in the slots.

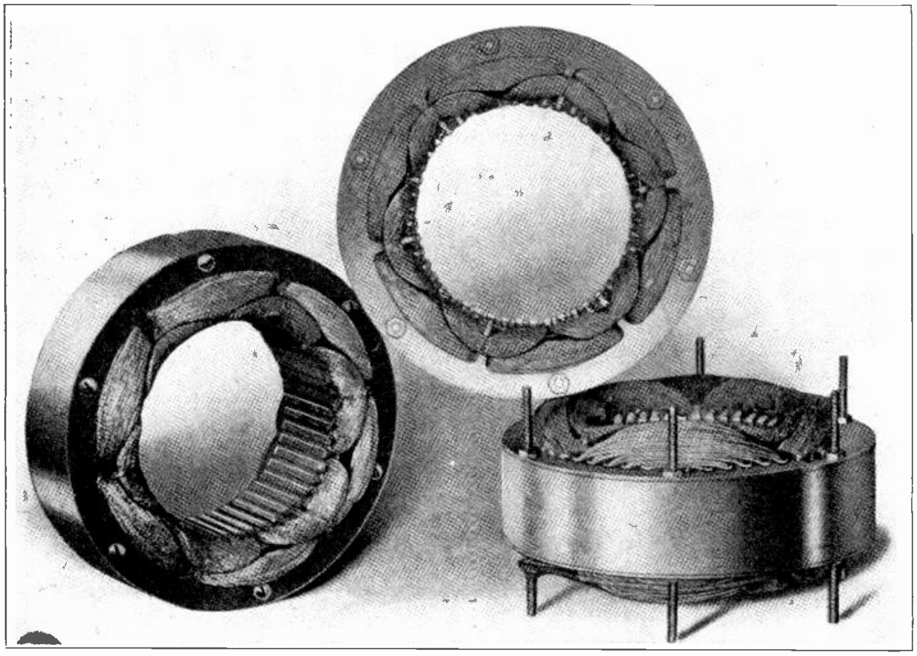

Fig. 52. On the left are shown several views of small single-phase stators for A.C. induction motors. Both the starting and running windings can be clearly seen in each of these views. Note how the starting winding overlaps the coils of the running winding about one-half their width or 90 degrees. This type of winding is known as a single-phase split-phase.

In starting to wind these coils, their centers are located where the edges of the running coils meet. This brings the edges of the starting coils together at the center of the running coils, and very often in the slots which were left empty when the running coils were wound. Windings of this type are known as single-phase, split-phase windings. The term "split phase" is used because the different numbers of turns in the starting and running windings cause them to be of different inductance, which makes the alternating current impulses in one winding lag slightly behind those in the other winding. This produces around the stator a sort of shifting or rotating magnetic field, which in turn cuts across the bars of the rotor, inducing current in these bars.

The reaction between the flux of the stator currents and rotor currents is what produces the torque or turning effect of this type motor.

The principles of inductance and split-phase operation will be more fully covered in a later section.

Fig. 52 shows several small stators and the positions of their starting and running windings.

72. CONNECTIONS OF STARTING WINDING

The starting and running windings are connected in parallel to the single-phase line, but a centrifugal switch is connected in series with the starting winding as shown in Fig. 53. This switch is arranged so that when the motor is idle it is held closed by springs.

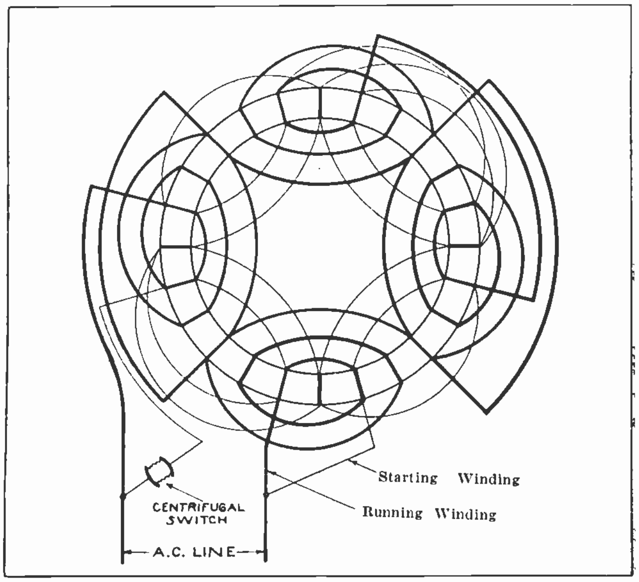

Fig. 53. The above diagram shows the complete circuits through both the starting and running windings of a single phase stator. Trace out each winding carefully and note how the coils are connected to produce alternate north and south poles around the stator.

When current is applied to the windings, both the starting winding and running winding are in use while the motor is starting and getting up to speed; but as soon as it reaches full speed, the switch, mounted to revolve on the shaft of the motor, is thrown open by centrifugal force, thereby opening the circuit of the starting winding. The motor then runs on the running winding only.

The starting winding must never be left in the circuit longer than just the few seconds required to start the motor. If it is left connected longer than this it will overheat and probably burn out.

Fig. 54 shows a simple sketch illustrating the method of connection of the starting and running windings to the line, and also the connection of the centrifugal switch. Remember that this switch must always be connected in series with the starting windings.

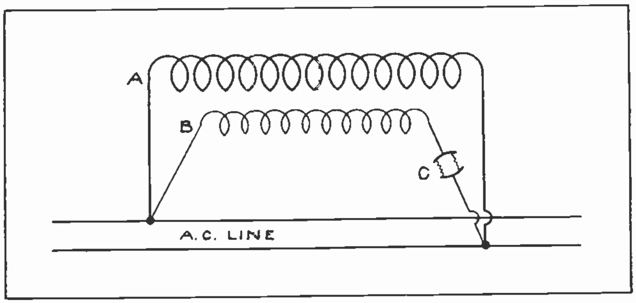

Fig. 54. This is a simplified diagram showing the manner in which the starting and running windings of a single phase motor are connected in parallel to the line. The centrifugal switch "C" is connected in series with the starting winding as shown.

73. CENTRIFUGAL SWITCHES

There are many different types of centrifugal switches used on single-phase motors; but the general principle of all of them is the same, in that they open the circuit of the starting winding by centrifugal force when the motor reaches nearly full speed.

Fig. 55 shows a sketch of one of the common types of these switches. The two views on the left show the stationary element, which is mounted on the end bracket of the motor; and the view on the right shows the rotating element, which is mounted on the shaft of the rotor. On the stationary element we have two terminals, "B" and "B", to which the line and starting winding leads are connected. These semi-circular metal pieces are separated from each other; so that there is no circuit between them

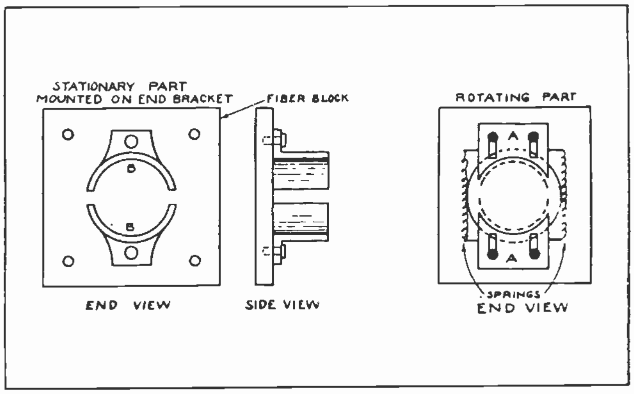

Fig. 55. These sketches illustrate the principle of a simple centrifugal switch, such as used for starting single phase motors. Examine each part closely as you read the explanations given on these pages.

except when the metal pieces "A" and "A" are drawn together over the cylinder formed by "B" and "B". This closes a circuit between them when the motor is idle. When the motor starts and begins to revolve at high speed the weight of the pieces "A" and "A" causes them to be thrown outward to the ends of their slots, thus disconnecting them from "B" and "B" and opening the circuit of the starting winding.

74. OPERATING PRINCIPLES OF TWO-PHASE MOTORS

Two-phase motors are designed to operate on two-phase alternating current and have two windings, each covering one-half of each pole, or spaced 90° apart, similarly to the starting and running windings of a single-phase motor.

Each of the windings in a two-phase machine, however, is of the same size wire and has the same number of turns. Instead of being wound with spiral coils, two-phase windings are generally made with diamond-shaped coils similar to those used in armatures. A section of a two-phase winding is shown in the lower left view of Fig. 56, and you will note the manner in which the three coils of each phase overlap in forming the winding for one pole of the motor.

In the upper view of this figure are shown the curves for two-phase current with alternations 90° apart. When this current flows through the two windings, it sets up poles that progress step by step around the stator so rapidly that it produces what is practically a revolving magnetic field. The progress of this field and the magnetic poles can be observed by tracing out and comparing the several views in Fig. 56. The dotted lines running vertically through the curves in the upper view indicate the polarity of the curves at that instant. These will be referred to as "positions".

For example, in position 1, "A" and "B" are both positive; and, referring to position 1 at the leads of the windings, we find that current will flow in at the starting leads of the two windings which are marked "S" and "S". The polarity set up will be as shown by the positive and negative marks in the sketch above these coils and at position 1.

At this instant we find that the current flows in at all of the six wires on the left and out at all six on the right. This will set up a magnetic flux or polarity as shown in the sketch of the magnetic circuit, position No. 1. This shows that the center of the pole at this instant will be in the exact center of the coils, and that a north pole will be produced at this point on the inside of the stator teeth.

At position No. 2 in the current curves, "B"-phase is still positive but "A" is changed to negative; so the current in the starting lead of "A"-phase will reverse as shown at position No. 2 and cause a reversal of the polarity around the "A" group. As this group covers the first half of the pole, these three slots will change in polarity. The first three slots of the second pole will also change and cause the pole to move over to the right three slots, as shown in position No. 2 of the field rotation sketch.

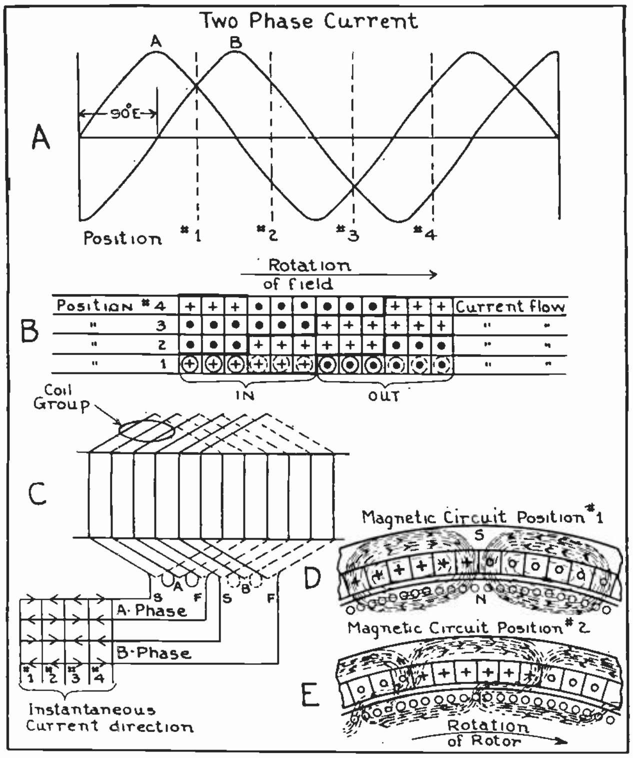

Fig. 56. The above diagrams show step by step the manner in which a revolving field is produced in a two-phase motor winding. Refer to each of the five sketches frequently when reading the descriptions in these columns. This figure illustrates a very important principle of induction motors and is well worth considerable study.

This shift of the magnetic pole is also illustrated in position 2 of the magnetic circuit sketch. At position 3 on the current curves, "B" has changed to negative and the current in the leads of the "B"-phase coil will reverse, causing the last three slots in each pole to change in polarity so the center of the pole moves three more slots to the right, as shown in position 3 of the field rotation sketch.

We find that as the currents in the coil groups reverse in this manner and keep shifting the magnetic poles to the right, a corresponding change or movement of the field takes place in the stator, as we have seen in positions 1 and 2 of the magnetic circuit. As this flux moves to the right and cuts across the rotor bars, it induces currents in them and the reaction between the flux of this secondary current in the rotor and the stator flux causes the field of the stator poles to be distorted from its natural shape, as shown in position 2 of the magnetic circuit. It is from this field distortion that the torque or twisting force is produced and causes the rotor to turn.

75. OPERATING PRINCIPLES OF THREE-PHASE MOTORS

The rotating action of the field in a three-phase motor is very much the same as that of two-phase machines, with the exception that only one-third of the pole, or two slots, reverse at a time. In the two-phase machine one-half of the pole, or three slots, change at each reversal of current. The coil groups of the three-phase winding should be placed in the slots in such a manner that they alternate in the same order as the currents change in the three-phase system.

If we observe the three-phase current curves in Fig. 57 we find that the alternations change polarity or cross the center line in the order A, C, B; A, C, B; etc. The coil groups should be wound in to correspond with these current changes, or in the order A, C, B; etc., as shown in Fig. 57.

A very interesting fact to know about three-phase systems is that at any given time the voltage or current curves above the zero line will exactly equal those below the line. For example, in Fig. 57 at position 1, A and B are each at about half their maximum positive value, while "C" is at full maximum negative value. A vertical line through these curves at any point will show the same voltage relation.

There is another condition that always exists in three-phase windings, and with which you should be familiar. You will notice that when tracing current in towards the winding on the line wires, the center group, or "C"-phase, will be traced around the coils in the opposite direction to "A" and "B". This should be the case in any three-phase winding, and will be if the coils are properly connected. This may seem confusing at first, but keep in mind that the three currents never flow toward the winding at the same time and that there will always be a return current on one of the wires. At any time when all three wires are carrying current, there will either be two positives and one negative or two negatives and one positive.

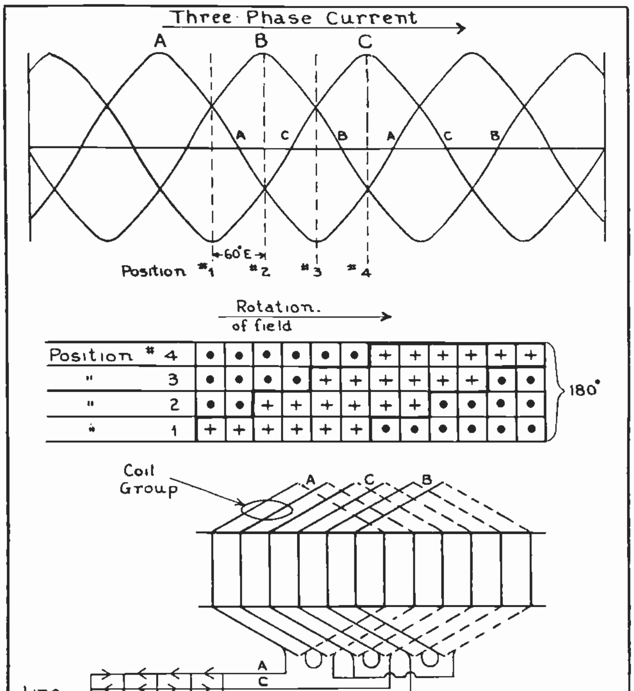

Fig. 57. The above diagrams show the development of the rotating field of a three-phase alternating current motor. Compare carefully the top, center, and lower diagrams and note the manner in which the field poles gradually advance in the slots as the current alternates in the three phases A, C, and B.

When these three currents flow through a three-phase winding, as shown in Fig. 57, three consecutive coil groups will be of the same polarity, and the next three groups will be of opposite polarity, thus building up alternate poles, N.S., N.S., etc.

Trace out and compare each of the positions 1, 2, 3, and 4 in Fig. 57 as was done in Fig. 56, and you will find how the field poles progress around the stator to produce a revolving magnetic field in a three-phase motor.

76. TERMS AND DEFINITIONS FOR A. C. WINDINGS

The following terms and definitions should be studied carefully, in order that you may more easily understand the material in the following pages.

A **Coil Group** is the number of coils for one phase for one pole.

The formula for determining a coil group is:

$$\frac{\text{Slots} \div \text{poles}}{\text{phase}}$$

The term **Full Pitch Coil Span** refers to coils that span from a slot in one pole to a corresponding slot or position in the next pole.

The formula for determining full pitch coil span is:

$$(\text{Slots} \div \text{poles}) + 1$$

NOTE: Full pitch is also known as 100% pitch. In some cases a winding may be more than full pitch, but should never exceed 150% pitch.

The term **Fractional Pitch** applies to coils which span less than full pitch. A fractional pitch should never be less than 50% of full pitch.

We have already learned that there are 360 electrical degrees per pair of poles; so, in the study of the following material be sure to keep in mind that any single pole, regardless of size, has 180 electrical degrees.

The term **Electrical Degrees Per Slot** is commonly used to express the portion of the pole which one slot covers, and is abbreviated E° per slot.

The formula for determining the electrical degree per slot is:

$$\frac{180}{\text{Slots} \div \text{poles}}$$

Some of the material just covered may seem to you to be somewhat technical or theoretical, but a good understanding of the principles and terms on these preceding pages will help you obtain a better understanding of many of the most important and practical features in the winding and testing of alternating current machines.

77. LAP WINDINGS FOR A.C. MACHINES

Both lap and wave windings are used for A.C. motors and generators, but some of the rules which were given for these windings on D.C. machines do not apply to A.C. machines.

Instead of classing them as parallel and series windings, as we did for D.C., they are defined for A.C. as follows:

A lap winding is one in which all coils in a pole group can be traced through before leaving that group.

A wave winding is one in which only one coil in each pole group can be traced through before leaving that group.

Lap and wave windings are practically the same as to polarity and general characteristics.

We learned that on D.C. machines the wave winding gave the highest voltage. This is not true of A.C. windings, as the A.C. wave winding gives no higher voltage than the lap. A single circuit A.C. lap winding puts all possible coils in series, so it gives just as high voltage as the wave.

The wave winding is stronger mechanically than the lap winding, and for that reason it is generally used for phase-wound rotors, as there is often considerable stress on their windings due to centrifugal force and starting torque.

Stators are generally wound with lap windings. In the design of A.C. stators, the number of slots is determined by their size and the number of poles, and is selected for convenience in connecting the type of winding desired for the purpose of the machine.

78. TWO PHASE A.C. WINDING EXAMPLE

When the total number of slots is evenly divisible by the product of the number of poles and the number of phases, there will be an equal number of coils in each group and the same number of groups in each phase. This is known as an equal coil grouping.

For example: if we have a machine with 72 slots and we wish to wind it for 6 poles and 2 phase operation, then, to determine the coils per group, we use the formula:

$$\text{Coil group} = \frac{\text{slots} \div \text{poles}}{\text{phase}}$$

or, in this case,

$$\text{Coil group} = \frac{72 \div 6}{2}, \text{ or } 6.$$

Then there would be 6 coils in series in each group and twelve groups in the winding. These twelve groups are divided into six parts for the six poles, and each part is again divided in two for the two phase-groups. Then these small groups of six coils each are connected into a two-phase winding.

A simple form of two-phase lap winding for two poles is illustrated in Fig. 58.

The starting leads of the coils for the "A" and "B" phases are marked "S A" and "S B", while the finish leads are marked "F A" and "F B". This winding could not be connected for three phase because the coils in each pole are not evenly divisible by three.

Note that the starts of each coil are 90° apart, or displaced from each other by one-half the width of one pole.

This should be remembered when connecting any two-phase winding, as the starts for these windings must always be spaced this distance apart.

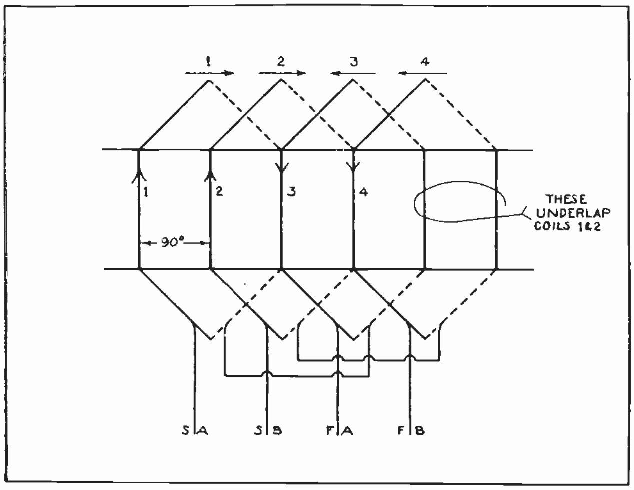

Fig. 58. This sketch shows the coils and connections of a simple two-pole, two-phase winding. Examine the connections of the coils carefully and note the direction of current in each coil.

79. COIL POLARITY IMPORTANT

When there is more than one coil per group the coils must be very carefully connected, as **all coils of the same group must be connected for the same polarity,** or, so that current flows in the same direction through all coils of this group. This is a very important rule to remember and is illustrated in Fig. 59.

The two coils in the group at "A" are properly connected; that is, the finish of one is connected to the start of the next; so that the flux will unite around the sides of these coils, as it should to produce the pole. The coils in group "B" are improperly connected, with the finish of one to the finish of the other. So in this case the current in the right hand coil is reversed. This causes the flux of the two coils to oppose and neutralize each other and therefore they cannot build up a strong magnetic pole in the stator core.

Check the connections of these two groups of coils carefully, so you will know the right and wrong methods.

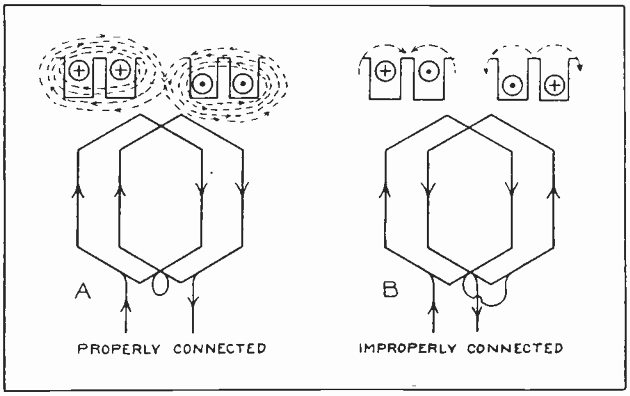

Fig. 59. Above are shown both the right, and wrong methods of connecting stator coils to obtain the right polarity. Note the conditions of magnetic flux set up in the slots with each connection.

Fig. 60 shows a simple two-pole, three-phase winding with one coil per phase group and three groups per pole. This winding only has one coil per group. Observe very carefully the method of connecting the coil groups together. You will note that they are connected to give alternate polarity —N, S, etc. Also note that there are two coil sides per slot, one lying on top of the other.

The leads from the coil ends are referred to as **top** and **bottom** leads, the one from a coil side lying in the top of the slot being called the **top lead**, and the one from a bottom coil side is called the **bottom lead.**

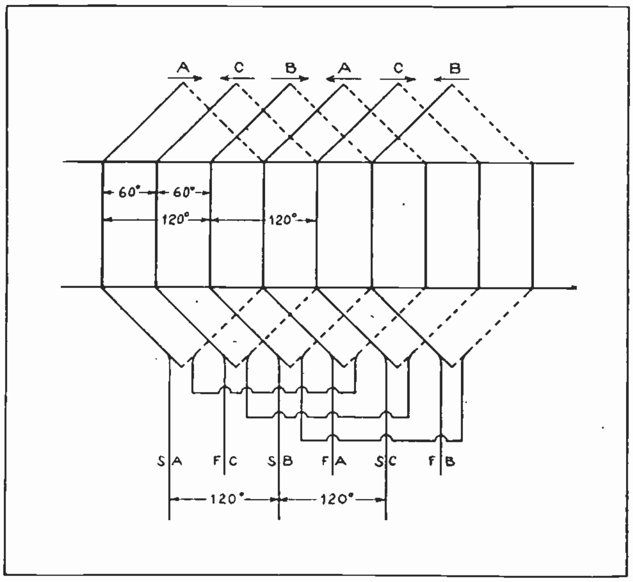

Fig. 60. This sketch shows a two-pole, three-phase winding. Note the spacing in degrees between the coil sides and line leads, and also the arrangement of the coil connections.

In making the connections from one group to the next of the same phase, always connect like leads together; that is, bottom leads together and top leads together. This rule should be followed strictly, in order to produce the alternate poles which are necessary in the winding to make the machine operate. If any of these coils is connected wrong the coils will overheat, as their self-induction will be neutralized and too much current will flow through them. This principle will be explained in a later section.

80. TYPES OF COILS FOR STATOR WINDINGS

Stators of 15 h. p. and under, and for less than 550 volts, usually have partly closed slots and are commonly wound with **"fed in"** or **"threaded in"** windings. For this type of winding we can use either the threaded-in diamond coil or what is known as a **basket coil.** Fig. 61 shows a coil of each type.

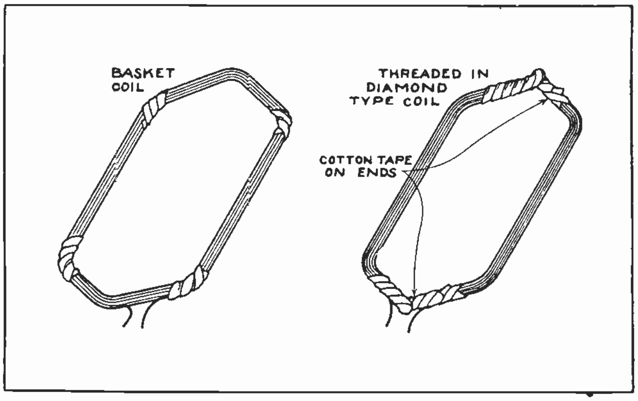

Fig. 61. Two common types of coils used in winding small stators with partly closed slots. These coils can be easily fed into the narrow slot openings.

The diamond coil is wound, shaped, and the ends taped with half lapped cotton tape before the coil is fed in the slots. The basket coil is simply wound to the approximate shape, and to the proper length and size; but is left untaped except for little strips of tape at the corners just to hold the wires together until they are placed in the slots. The ends of these coils are taped after they are placed in the slots, or in some cases on small stators the coil ends are left untaped. After placing the coils in the slots, their ends are shaped with a fibre drift and a rubber or rawhide mallet, so the coil ends can pass over each other.

These basket coils are generally used only for the smaller machines, and the diamond coils are usually more desirable for the larger machines.

The untaped sides of either of these types of coils make it possible to feed the wires one or two at a time into the narrow slot openings. Thus the name "fed in" coils.

81. PROCEDURE FOR WINDING A THREE PHASE STATOR

The following paragraphs describe in detail the procedure of winding a three-phase stator of 36 slots and 6 poles.

Let us apply the formula:

$$\text{Coil group} = \frac{\text{slots} \div \text{poles}}{\text{phase}}$$

or, in this case,

$$\text{Coil group} = \frac{36 \div 6}{3}, \text{ or 2 coils per group.}$$

The full pitch coil span will then be found by the coil span formula:

$$\text{Coil span} = \frac{\text{slots}}{\text{poles}} + 1$$

or, in this case,

$$\text{Coil span} = \frac{36}{6} + 1 = 7.$$

The first coil will then span or lie in slots one and seven.

After the slots have been insulated, begin by placing one side of the first coil in any slot with the leads of the coil toward the winder, as shown in Fig. 62.

One side of the next coil is then placed in the slot to the left of the first, which will make the winding progress in a clockwise direction around the stator. Four more coils are then placed in the slots in a similar manner, leaving the top sides of all of them out.

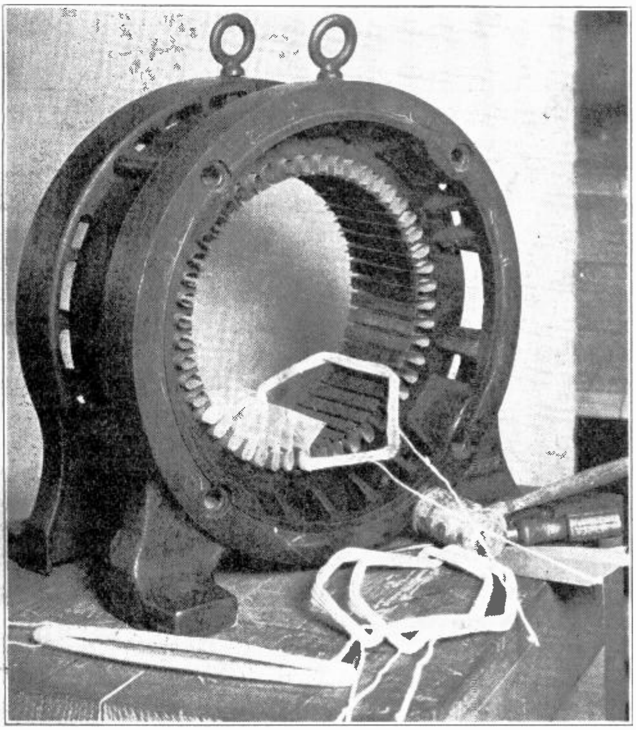

Fig. 62. This view shows a method of starting the first coil for a stator winding. The fish paper insulation is in all slots and the varnished cambric has been placed in several.

When the bottom side of the seventh coil is placed in the seventh slot, its top side is laid on top of the first coil, as shown in Fig. 63. The bottom of eighth coil is placed in the eighth slot and its top is placed on top of the bottom side of the second coil.

This procedure is followed until all the coils are in place, the bottom sides of the last six coils being slipped in under the first six coils, the top sides of which were left out of the slots. Fig. 64 shows a view of a stator from the back end, after the last coils have been laid in under the top sides of the first coils. These top sides are now ready to be inserted in the slots and then the slot insulation can be trimmed, folded in over the coils, and the slot wedges put in place.

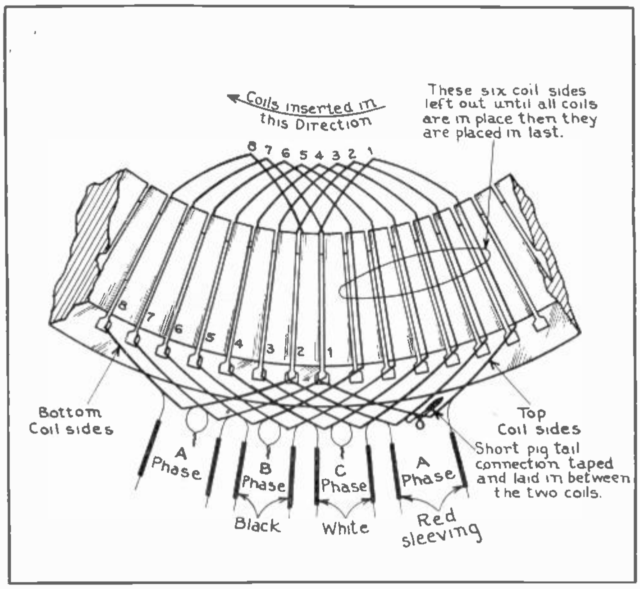

Fig. 63. This diagram illustrates the method of placing the first coils in a stator and the proper rotation for inserting them. Note the sleeving used for marking the leads of the different phase groups, and also the several coil sides which are left out of the slots until those of the last coils are inserted under them.

While the coils of the winding just described were laid in to the left of the first, or clockwise around the stator, they can be laid either clockwise or counter-clockwise, according to the shape of the end twist of the coils.

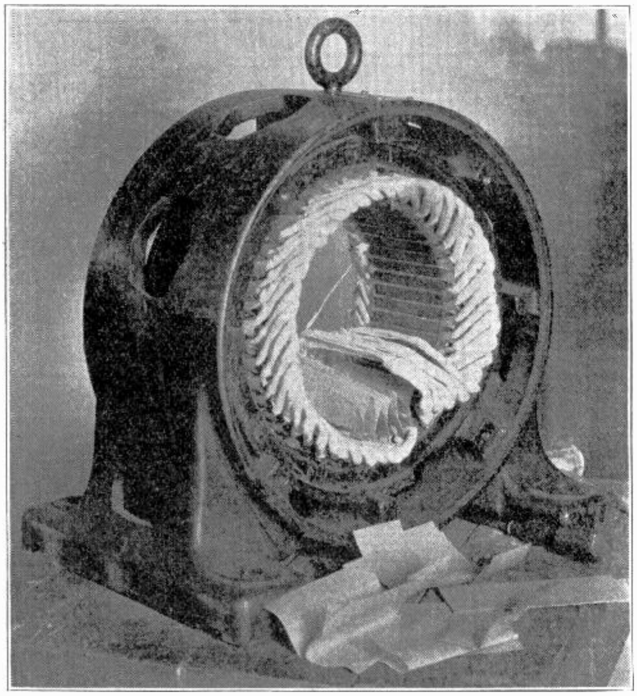

Fig. 64. This photo shows a stator winding nearly completed and ready for the top sides of the first coils to be placed in on the bottoms of the last coils which were inserted. The insulation has been neatly folded down over the coils in most of the slots.

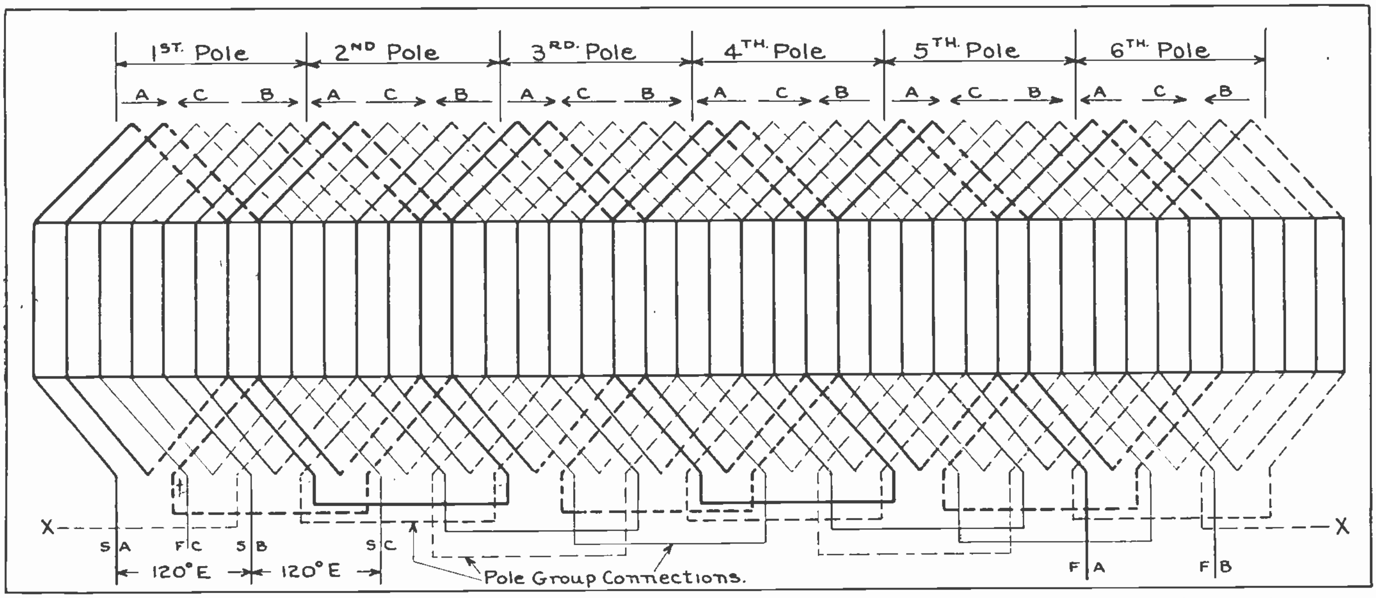

Fig. 65. Complete diagram of a three-phase, six-pole winding for a machine with 36 slots. The coils of each phase are shown in lines of different thickness in order that they may be easily traced through the winding. Trace these circuits very carefully and note the manner in which the coils are connected to obtain alternate N. and S. poles. Also note how the coil groups of each phase overlap to complete the three phases of each pole of the winding. **Refer to** this diagram frequently while studying the accompanying pages, and also at any time you may need it when connecting a three-phase winding.

82. MARKING AND CONNECTING COIL LEADS

In winding stators of small size it is general practice to connect the coils into groups as they are fed in the slots. You will notice in Fig. 63 that the bottom lead of the first coil is connected to the top lead of the second. The top lead of the first coil and the bottom lead of the second are identified or marked with sleeving of the same color. All of the following groups are connected together the same as the first; but the unconnected leads of the second group are marked with a different colored sleeving than the first, and the third group with still another color. For the fourth group we again use the same color as for the first, and from there on the colors are alternated on the other groups, the same as on the first three.

When all the coils of this 36-slot winding are in place there will be five more poles similar to the one in Fig. 63.

After the wedges are in the slots the pole group connections are made as shown in Fig. 65. This diagram shows the connections of the groups into a three-phase winding.

Careful observation of the starting leads of A, B, and C phases will show that there are three separate windings spaced two-thirds of a pole, or 120 electrical degrees, apart.

You will note however, that the windings are placed in the stator in the order A, C, B, from left to right; thus actually making the effective spacing 60 degrees for certain connections.

After selecting the top lead of any convenient coil in the winding for the start of A phase and connecting all groups of a corresponding color into one winding, the second start, or B phase, is selected. This lead **must be taken from the top of the third group**, counting A phase as number one. All groups for B phase are then connected and, last of all, those for C phase are connected. The C phase should start at the top lead of the fifth coil group, which would be the same distance from B as B is from A.

There will then be six leads left, three starts and three finish leads. In Fig. 65, these leads are marked SA, FC, SB, SC, FA, and FB, and you will note that they are all from top sides of coils. In selecting the starting leads for such a winding, we choose three groups which are close to the opening for the line leads in the frame or end-bracket.

Fig. 66 shows a complete connection diagram for a two-phase, four-pole winding with 24 slots. The coils are laid in the slots the same as for a three-phase winding. There are three coils per group and two groups in each pole. The coils are also connected into groups the same as for a three-phase winding, and the pole group connections made similarly, except with two groups per pole instead of three.

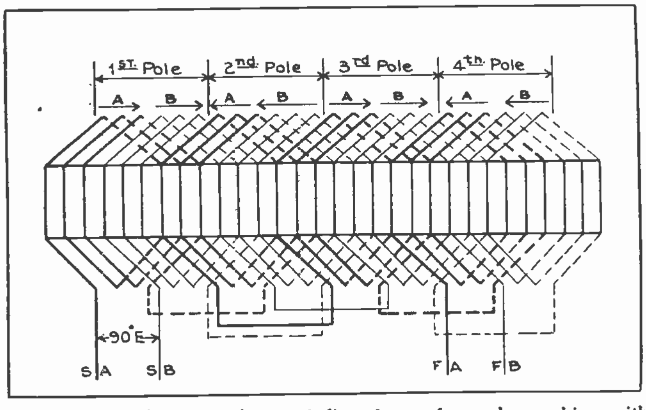

Fig. 66. Complete two-phase winding for a four-pole machine with 24 slots. Note the similarity between this diagram and the one in Fig. 65 as to the arrangement of coils and connections between pole groups; but also note that there are only two phase groups per pole, and the different spacing in electrical degrees between the leads in this winding and the three-phase winding in Fig. 65.

83. PROCEDURE FOR CONNECTING A 3 PHASE WINDING

Fig. 67 shows complete four-pole, three-phase winding in a stator with 48 slots. The coils are all in place, but no group connections have been made. You will note that all top and bottom leads are brought out at the points or ends of the coils, and all in the same position on the coils, in order to make a neat and systematic arrangement of the leads and to simplify the making of connections.

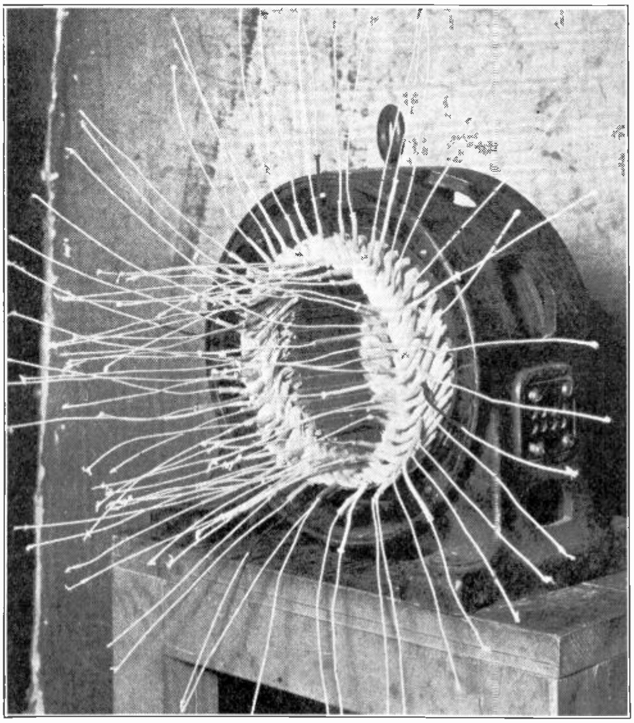

Fig. 67. The above photo shows a stator with 48 slots wound for four poles, three phase. The coils are all in the slots and the leads are marked with sleeving and ready for the connections to be made.

The bottom leads of all coils are bent out around the edge of the frame, and all top coil leads are arranged straight out from the stator core. The next step would be to strip the ends of these leads and temporarily connect them in bunches for making a ground test from the coil leads to the stator. This test can be made with a 110-volt test lamp, and it should always be done before connecting any coils, to make sure that none of them are grounded because of damage to their insulation while they were being placed in the slots.

To make sure that no coils in any group are open, the start and finish leads of each group should also be tested by placing one wire of the 110-volt line on a start and the test lamp on the finish lead.

Note that all coil leads are marked with sleeving and that every fourth bottom lead and also every fifth top lead are marked with longer sleeving, as these leads are those of the start and finish of each pole group.

84. MAKING "STUB" CONNECTIONS

The next step will be to cut off all leads of the coil groups that are marked with the short sleeving, about 3 inches long. Strip the insulation from about 1½ inches of their ends; then connect them together, the bottom lead of one coil to the top of the next. This is shown in Fig. 68, and the pigtail splices of these coil groups can be plainly seen.

The bottom leads of the pole group are still shown sticking out around the frame, and the top pole group leads are projecting out from the center of the core.

85. POLE AND PHASE CONNECTIONS

In Fig. 69 the coil-group connections have been soldered, taped, and folded down between the coil ends and the pole group leads have been connected together. The bottom lead of one group is connected to the bottom lead of the the next group of the same phase and color. The top lead of one group is also connected to the top lead of the next group of the same phase. This places all pole groups of each phase in series in the winding. These pole-group leads are commonly called **jumpers.**

You will note that the three starts for the phases which are marked SA, SB, and SC are taken from the first, third, and fifth pole groups, near the line-lead opening in the frame.

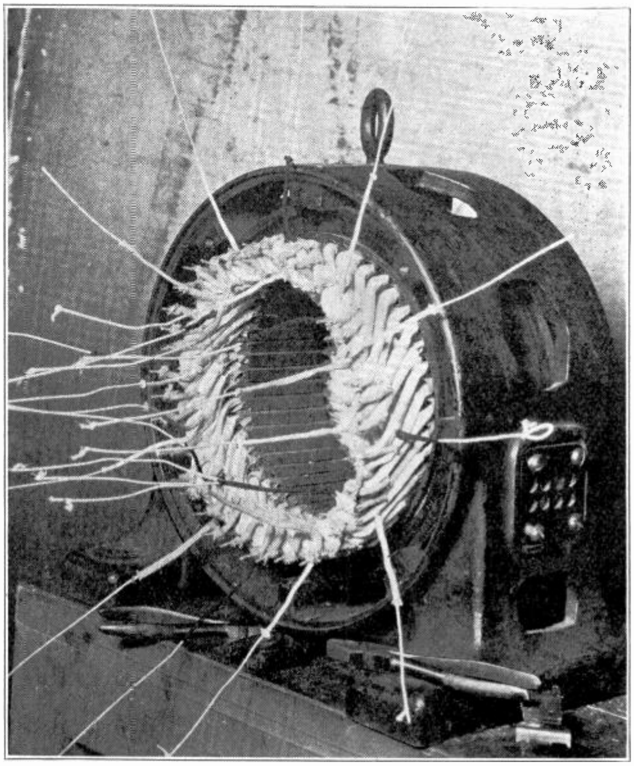

Fig. 68. This view shows the same stator as in Fig. 67, except that the coil group connections have been made. By looking carefully you can see the bare pig-tail splices of these connections around the winding. The pole group leads are not yet connected.

The three finish leads marked FA, FB, and FC, are shown at the top of the winding.

In Fig. 70 the three finish leads are shown connected together at the top of the machine, and the three start leads are connected to heavy rubber covered wires for the line leads.

The pole-group leads are now folded or pressed

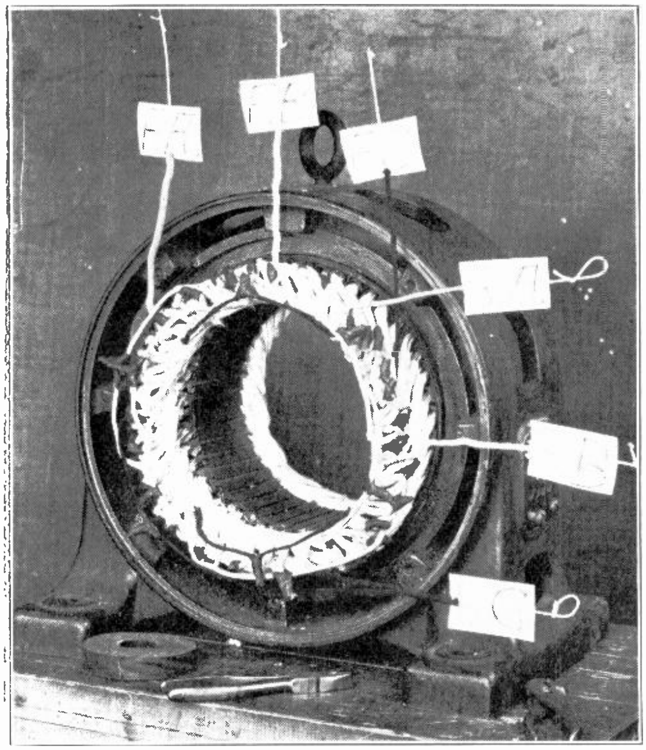

Fig. 69. Again we have the same stator as in the last two figures, but in this case the connections are one step farther along. The coil group connections have been soldered and taped, and the pole group connections are made, leaving only the start and finish leads of each phase. These are marked by the tags as shown.

down around the outside of the coil ends to make them clear the end bracket and rotor, and the winding is then ready for the insulating compound and baking.

86. UNEQUAL COIL GROUPING

The lap windings previously covered have all had equal coil grouping, that is, the same number of coils in consecutive groups. In some cases it is necessary to wind a stator with unequal coil groups in the winding. This is because the number of slots does not happen to be evenly divisible by the product of the number of poles and the number of phases. The unequal coil grouping to be used in such a case will have two or more groups in each pole, with unequal numbers of coils.

For example, suppose we have a 48-slot machine to wind for 6 poles and 3-phase. In this case the product of the poles and phase, is 6 × 3, or 18. The number of slots, or 48, is not evenly divisible by 18 so we cannot use equal coil grouping.

This stator can, however, be wound satisfactorily for three-phase by using the following coil grouping: Three coils in group "A", three coils in group "C", then two coils in group "B", which completes the first pole.

For the second pole the small group should be shifted to another phase; so we will place three coils in group "A", two in group "C", and three in group "B", etc. Thus we keep alternating or shifting the small group from one phase to the next throughout the winding.

The tables in Fig. 71 show the manner in which this grouping will even up the coils per phase in the complete winding. These tables show unequal groupings which are commonly used in two and three-phase motors.

The horizontal lines or rows show the number of coils per group in each phase, for each of the poles. The vertical columns show the number of coils per group throughout the entire winding. By adding the columns for each phase you will find that the number of coils per phase is the same in all three phases.

87. STAR AND DELTA CONNECTIONS

After the coil groups and pole-group connections in a three-phase winding have been completed, six leads remain to be connected for line leads.

The two methods of connecting these are known as **Star** and **Delta** connections. These connections are very important, as they determine to quite an extent the voltage rating of an A. C. generator or motor.

The left view in Fig. 72 shows the star connection for an A. C. winding. The three coils—A, B, and C—represent the three-phase windings of the machine and are spaced 120° apart. The center connection of this star is the point at which all three of the finish leads of the winding are connected together. The three outer ends of the coils are the starts, and are connected to the line wires.

The sketch at the right in this figure shows the method of making the star connection right on the leads of a winding.

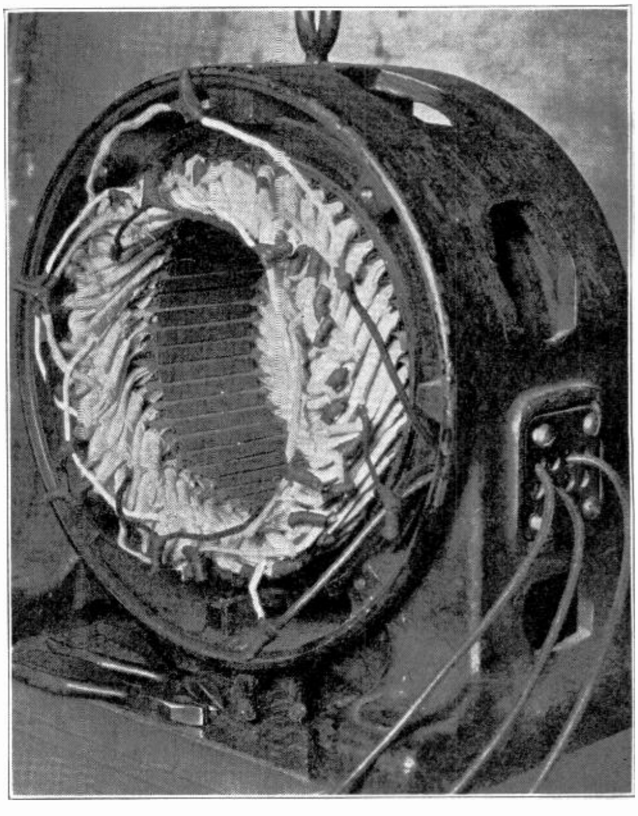

Fig. 70. The last step in the connections has now been completed and the starts and finishes of the first groups are connected to the line wires which are brought out through the right side of the frame.

The symbol for the star connection is a mark consisting of 3 small lines 120° apart and connecting at the center. The letter Y is also commonly used.

The left view in Fig. 73 shows the delta connection for an A. C. winding. The three coils—A, B, and C—again represent the three-phase winding of the machine, and are connected together in a closed circuit with the start of "A" to the finish of "C", start of "C" to finish of "B", and start of "B" to finish of "A".

The line leads are then taken from these points at which the windings are connected together.

The sketch at the right in Fig. 73 shows the method of making the delta connection right on the leads of a winding.

The symbol for the Delta connection is a small triangle, △.

	A	C	B
POLE # 1	3	3	2
" 2	3	2	3
" 3	2	3	3
" 4	3	3	2
" 5	3	2	3
" 6	2	3	3

48 SLOTS 6 POLES
3 PHASE

	A	C	B
POLE # 1	4	5	4
" 2	5	4	5
" 3	4	5	4
" 4	5	4	5

54 SLOTS 4 POLES
3 PHASE

	A	C	B
POLE # 1	3	2	2
" 2	2	3	2
" 3	2	2	3
" 4	2	2	2
" 5	3	2	2
" 6	2	3	2
" 7	2	2	3
" 8	2	2	2

54 SLOTS 8 POLES
3 PHASE

POLE # 1	5	4
" 2	4	5
" 3	5	4
" 4	4	5
" 5	5	4
" 6	4	5

54 SLOTS 6 POLES
2 PHASE

Fig. 71. The above table shows unequal coil groups which can be used for two and three phase windings. Note how this arrangement of coils places an equal number in each phase when the winding is complete, even though there is not the same number in each phase of any one pole.

88. VOLTAGE OF STAR AND DELTA CONNECTIONS

By carefully comparing these two forms of connections in Figures 72 and 73, you will note that the delta connection has only half as many turns of wire between the line leads of any phase, as the star connection. We know that the number of turns or coils in series directly affects the voltage, so we can see that the star connection for a generator will produce higher voltage than the delta, and that the star connection when used on a motor will enable the motor to be used on higher line voltage.

The delta connection, however, has two windings in parallel between any two line or phase leads, so it will have a greater current capacity than the star connection.

As the star connection places twice as many coils in series between line wires as the delta connection, it might at first seem that it would give double the voltage of a delta connection. The voltage increase, however, will not be quite double, because the spacing of the two windings in the machine is 120° apart and consequently their maximum voltages occur at slightly different periods of time. The placing of the C phase winding between the windings of A and B phases, as explained in Art. 82, actually reverses its phase relation to the other two windings by 180 degrees; and in the star connection this produces voltages in series which are only 60 degrees displaced. So when two equal voltages which are 60 degrees apart are connected in series, their total voltage at any instant will not be double, but will be approximately 1.73 times the voltage of either one.

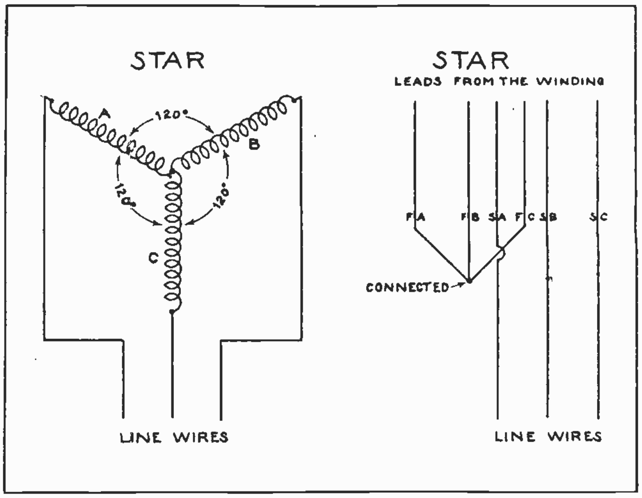

Fig. 72. The above two sketches illustrate the method of making star connections with alternating current windings. Note the phase displacement between the three windings on the left and also the manner in which two windings are placed in series between any pair of phase wires. The sketch at the right will be convenient for reference when connecting machine windings in this manner.

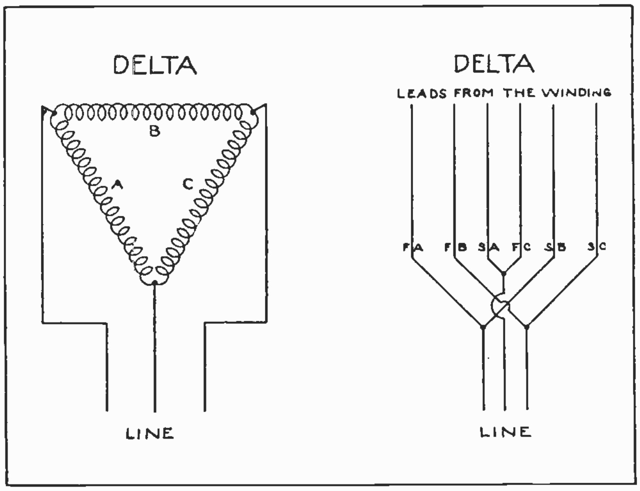

Fig. 73. These diagrams show the method of making delta connections for alternating current windings. The sketch on the left shows that with this delta connection two windings are in parallel between any pair of phase wires. The sketch on the right shows the manner of making a delta connection to the leads of a machine winding.

This value is obtained by vectorial addition instead of numerical addition. Fig. 74 shows how this can be done graphically or with lines drawn to scale and at the proper angles to represent the voltages to be added. The line from "B" to "A" represents 100 volts of one winding, and the line from "B" to "C" represents 100 volts of another winding 120° out of phase with the first. However, as one of the phases is reversed with respect to the other, we will draw a line in the opposite direction from B to D, to represent the voltage 180° displaced, or in the reverse direction to that shown by line B A. This voltage will then be 60° displaced from that in the other phase, shown by line B C.

By completing our parallelogram of forces as shown by the light dotted lines we can now determine the vectorial sum of the two phase winding voltages in series, by measuring the diagonal line B. E. If the lengths of the lines "B C" and "B D" are each allowed to represent 100 volts by a scale of ⅛ inch for each 10 volts, we find by measuring the length of the line "B E" that it is 1.73 times as long as either of the others, so it will represent about 173 volts.

Observation of Fig. 74 will show that a straight line drawn from A to C would be exactly the same length as the line from B to E. In many cases these vector diagrams are drawn in this manner by merely reversing the arrow on line A B and leaving off lines B D, C E, and B E.

This same method can be applied to find the sum or combined force of two separate mechanical forces acting at an angle. If we have a force of 100 lbs., acting in a direction from "B to C", and another equal force acting from "B" to "D", then the combined force "B to E" will be approximately 173 lbs.

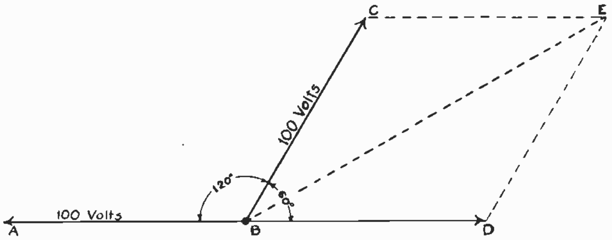

Fig. 74. The above diagram illustrates the method of adding together two voltages of windings connected in series but out of phase with each other 120°. The dotted line gives the correct sum of the two voltages shown by the solid lines.

Another method of calculating the sum of voltages which are out of phase will be given in a later section; and the use of vectors, or lines and angles for such problems will also be more fully explained in that section.

The important fact to remember is that the star connection always gives 1.73 (or, to be exact, 1.732) times the voltage of the delta connection. So, in **changing from delta to star we multiply the delta voltage by 1.732; and in changing from star to delta we divide the star voltage by 1.732,** or multiply it by .5774, to get the delta voltage.

89. FRACTIONAL-PITCH WINDING

Fractional-pitch windings, also known as short-chord windings, are those in which the coil span is less than full pitch. There are several reasons for making windings with fractional-pitch coils. The shorter coils used in these windings provide greater mechanical strength of the winding, and they also produce a lower voltage than full-pitch coils. Fractional-pitch windings are also used to improve the power factor of alternating-current machines, as will be explained in a later section.

By referring to Fig. 75, you will note that the length of the coil between its ends or points is reduced by making the coil span less than full pitch. In this figure the large coil which spans from slot 1 to slot 7 is assumed to be a full-pitch coil, so a coil laid in slots 1 and 6 will be a fractional-pitch coil and will have 83⅓% pitch. The shorter the coil ends are, the greater the mechanical strength of the coil.

Most two and three-phase motor windings use a coil span of less than full pitch, and generally about 75 to 85 per cent of full pitch. If a generator winding is changed from full pitch to fractional pitch, the coils which are thus shortened will not span from the center of one pole to the center of the next. Thus the generator voltage will be decreased. This voltage reduction will vary with the sine of an angle of one-half the electrical degrees spanned by the coil.

For example, if a machine has 54 slots and 6 poles, the full-pitch coil span would be (54 ÷ 6) plus 1, or 10. The coils for this winding would then span from slots 1 to 10 and this full pitch would, of course, be 180 electrical degrees. Such a coil will span from the center of one pole to the center of the next, and the voltage generated in it will be maximum or 100%.

If we use a fractional pitch coil which lies in slots 1 and 7, it would in this case span only 120 electrical degrees, instead of 180. Since 54 ÷ 6, or 9 slots represent 180 degrees, one slot will represent 20 de-

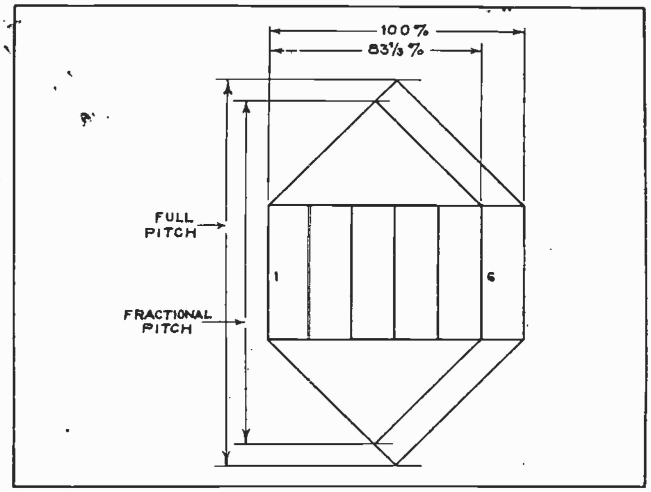

Fig. 75. Note how fractional-pitch windings make the coils shorter as their pitch is decreased. The shorter coils will have greater mechanical strength, which is one of the advantages of this type of winding.

grees and 6 slots 120 degrees. One-half of 120 degrees is 60 degrees, and the sine of an angle of 60 degrees is .866. So a fractional-pitch coil spanning 6 slots instead of 9 would only generate a little over 86% of the voltage that would be produced by a full-pitch coil, and this would apply to the entire winding of the machine. The sines of various angles can be found in tables given in a later section on A. C. and will be more fully explained in that section.

90. SPECIAL POLE GROUP CONNECTION

Fig. 76 shows a system of connections very often used on three-phase motors. This system of connections will give the same results as the one previously described in this section and can be used on any two or three-phase winding. You will note that instead of connecting from the finish of a certain coil group to the finish of the next coil group of that phase, this finish lead is carried over to the start of the third coil group of that phase, skipping the second one and leaving it to be connected when the counter-clockwise connections are made. This produces the same polarity as though all coils of a certain phase were connected together in succession from finish to finish, start to start, etc.

Compare this method with that shown in Fig. 65. One of the advantages of this system is that on heavy windings it allows the end connections to fit more compactly against the coils and in a small space in the machine.

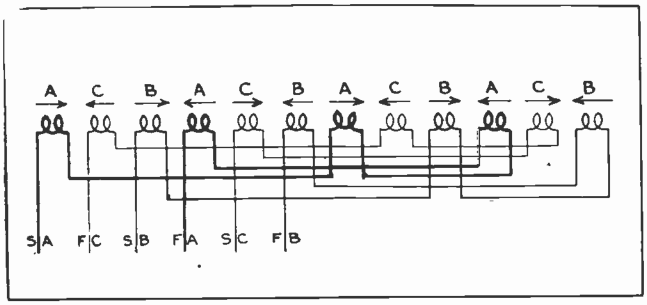

Fig. 76. This diagram shows a different method of connecting together the pole groups of the winding to allow a more compact arrangement of the leads on heavy windings. This method simply connects every other pole of one phase in a straight series group without crossing the leads; then connects back to get the remaining poles of those phases which were skipped the first time. These are connected in another straight series group and to the first group in a manner to produce alternate N. and S. poles throughout that phase.

91. ROTOR WINDINGS

We have previously mentioned that some alternating current machines have wound rotors using windings similar to those of a D. C. armature, but instead of these coils being connected to the bars of the commutator, they are connected together for two or three-phase the same as stator coils are. The main leads are then connected to slip rings on the rotor shaft. Such windings are used for machines for variable speed duty and machines where extra-heavy starting torque and certain power factor characteristics are required.

Fig. 77 shows a diagram of a "phase-wound" rotor of four poles and 24 slots, wave wound. This type of winding is used very extensively on large rotors which have heavy coils made of copper bars, and the connecting system is practically the same as for all wave windings. This rotor can be used satisfactorily with either a two or three-phase stator winding.

The actual winding procedure for such rotors is practically the same as for D. C. armatures, except for the difference in the connections.

92. CHANGING OPERATING VOLTAGE OF INDUCTION MOTORS

Very often the maintenance man is confronted with a problem of changing the operating voltage of induction motors to permit them to be operated on a different line voltage, in case they are moved to a new locality where the original operating voltage is not obtainable.

The voltage of any individual motor winding varies directly with the number of turns it has connected in series.

If you remember this simple rule it will help you solve many problems in making voltage changes on equipment. There are, of course, certain practical limits beyond which this change of voltage should not be carried. For example, if we have a winding operating at 220 volts we might be able to increase the number of turns to a point where the winding would stand 2300 volts, but it is doubtful whether the insulation would stand so high a voltage.

It is almost always permissable to reconnect a winding to operate on a lower voltage than it has been designed for; but, when reconnecting a machine to increase its operating voltage, the insulation should always be considered. The usual ground test for the insulation of such equipment is to apply an alternating current voltage of twice the machine's rated voltage, plus one thousand volts. This voltage should be applied from the winding to the frame for at least one minute and a test should be made after the winding is reconnected, or on any new winding

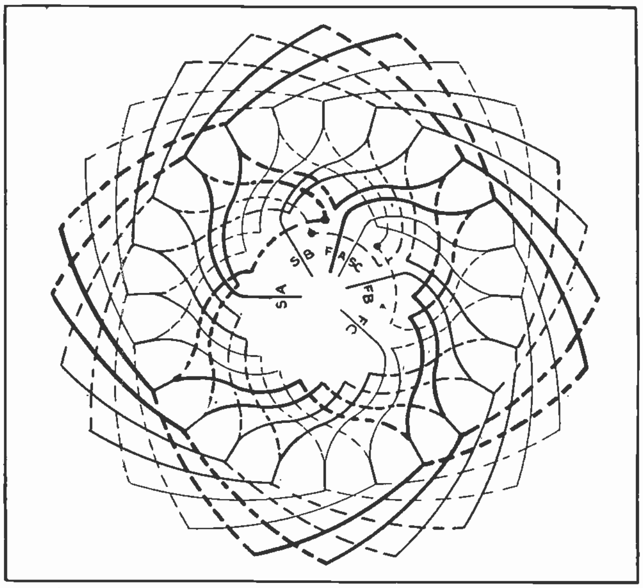

Fig. 77. This sketch shows a complete winding diagram of a 24-slot wave-wound rotor. Rotors with windings of this nature are sometimes called "phase-wound" rotors.

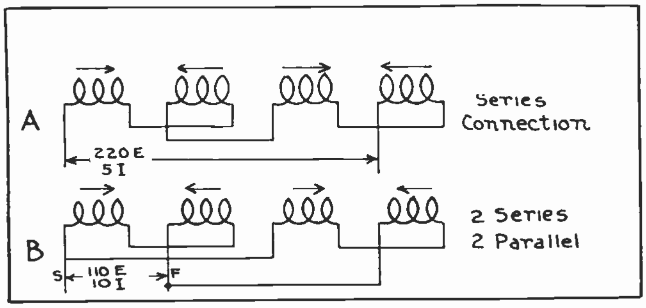

Fig. 78. The above diagram shows the method of reconnecting poles of the winding from series to series-parallel to be operated on a lower voltage.

before it is placed in operation. When a winding is changed for a different voltage it should be arranged so that the voltage on each coil group will remain unchanged.

Fig. 78 illustrates the manner in which this can be done. In the diagram at "A", 220 volts are applied to four coil groups in series, which places 55 volts on each group, and we will assume this voltage will cause 5 amperes to flow. The same winding is shown again at "B", reconnected for 110 volts, with two groups in series in each of two parallel circuits. When 110 volts are applied to these two parallel groups we will still have 55 volts per coil, and the same amount of current will flow. The rotating magnetic field will not be affected any differently as long as the amount of current per coil is not changed and the polarity of the coils is kept the same. This explains why it is not necessary to change the rotor winding when the winding in the stator is reconnected for a different voltage.

In reconnecting two or three-phase windings all phases must be connected for the same number of circuits, and when connecting the groups for a winding having several circuits, extreme care should be taken to obtain the correct polarity on each group.

93. TEST FOR CORRECT POLARITY

In changing the connections of a three-phase winding one must be very careful not to connect the phases in a 60° relation instead of 120° as they should be. By referring to Fig. 79 we can see that it would be easy to connect the wrong end of the B-phase to the star point. This would reverse the polarity of the entire B-winding, and cause the stator winding to fail to build up the proper rotating field. The result would be that the motor would not develop any torque, and the winding would heat up and burn out if the reverse connection were not located and corrected at once.

To avoid making a mistake of this kind, trace through each winding, starting from the leads or terminals and proceeding to the star connection at the center of the winding. As each successive coil group is traced through, place an arrow showing the direction in which that group was passed through. When all three phases have been traced through in this manner and the arrows on the groups are inspected, the sketch or connection is correct if the arrows on adjacent groups reverse. That is, they should point alternately clockwise and counter-clockwise around the winding.

94. EFFECT ON CURRENT WHEN CHANGING THE VOLTAGE

It is common practice among most manufacturers to design machines that can readily be connected for either of two common voltages. This is accomplished by a series or parallel arrangement which can be more easily understood by comparing Figs. 79 and 80. In the center of each of these diagrams is shown a small schematic sketch that illustrates in a simple manner the series or parallel arrangement of the coils. This center sketch in Fig. 79 shows that there are twice as many coil groups in series between the terminal leads as there are in the connection in Fig. 80. This means that if the winding in Fig. 79 is properly connected for 440 volts the one in Fig. 80 would be correct for 220 volts.

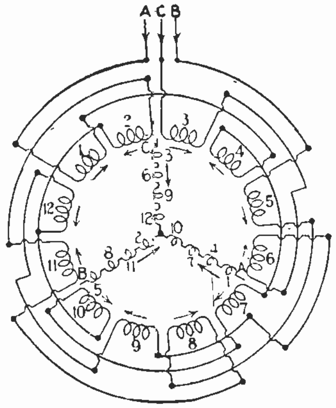

Fig. 79. This diagram shows a 3-phase, four-pole winding in which the pole groups in each phase are all four connected in series, and the three series groups connected star as illustrated by the diagram in the center. Don't confuse the inner and outer diagrams as they are entirely separate and each shows the same winding merely in a different manner.

We know that in any motor the horse power depends on the number of watts which are used in its circuit, and we also know that the watts are equal to the product of the volts and the amperes; so, if we wish to maintain the same horse power of a motor at one-half its normal voltage, we can see that it will have to carry twice as many amperes at full load.

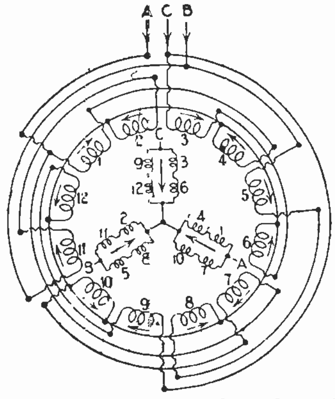

Fig. 80. This diagram shows the same three-phase, four-pole winding which was shown in Fig. 79, but in this case the four pole groups of each phase have been connected two in series and two in parallel, and then the phase groups connected star as shown by the center sketch.

By comparing the center diagrams in Figs. 79 and 80, we can see that this extra current can be carried all right by the windings as they are reconnected for the lower voltage in Fig. 80. In this connection there are two circuits in parallel which, of course, will have twice the cross-sectional area of copper that the single circuits in Fig. 79 had.

If the number of poles in the machine is evenly divisible by 4—as, for example: 4, 8, 12, 16, etc.—the winding may be connected in four parallel circuits, as shown in Fig. 81. By comparing this with the connections and voltages of Figs. 79 and 80, we find it will be proper to operate the winding in Fig. 81 at 110 volts, and four times the current which was used in the connection in Fig. 79; which should maintain the same horse power. The increased current in this connection is again provided for by the four circuits in parallel.

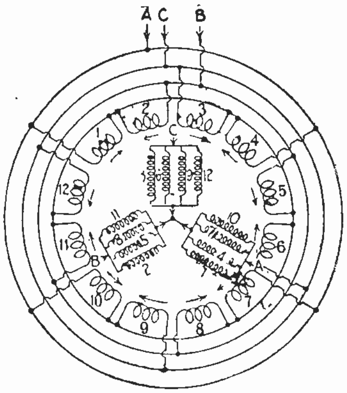

Fig. 81. Again we have the three-phase, four-pole winding. This diagram has all four poles of each phase connected in parallel and the three phase groups connected star as shown by the center sketch.

On this same principle, if the number of poles of a machine can be evenly divided by 6, it will be possible to reconnect the windings for either three or six parallel groups, as shown in Figs. 82 and 83.

Before attempting to make such changes in connections, a check should be made to see if the winding can be connected for the desired number of circuits. A rule for this which is easy to remember is that **the total number of poles must be evenly divisible by the number of circuits desired,** otherwise the winding cannot be changed to that connection.

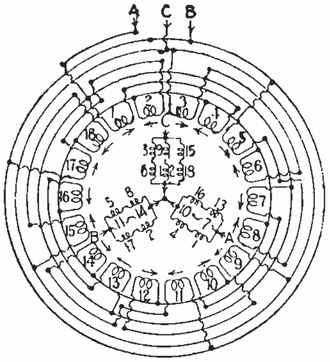

Fig. 82. This diagram shows a six-pole, three-phase winding with the six poles of each phase connected two in series and three in parallel, and then the three phase groups connected star.

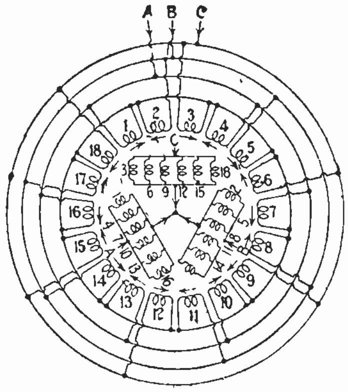

Fig. 83. In this case the six-pole, three-phase winding has all six poles of each phase connected in parallel and the three-phase groups connected star. These diagrams from 79 to 83 inclusive show additional practical applications of series and parallel circuits to obtain different voltage and current capacities of machine windings.

95. SPECIAL CONNECTIONS FOR CONVENIENT VOLTAGE CHANGES

Inasmuch as some factories and plants may be supplied with more than one voltage for power purposes, manufacturers commonly supply motors that can easily be changed from one voltage to another; for example, 110 to 220 volts, or 220 to 440 volts; or from either of the higher voltages to the lower ones.

In most cases each winding is divided into two parts with suitable leads from each section brought outside the motor. These leads can be conveniently changed for either one or two voltages.

Practically all repulsion induction motors that use a spiral type winding are provided with this arrangement for two voltages. Fig. 84 shows the windings and terminal block of such a machine and the manner of changing the connections for either 110 or 220 volts. Two poles are connected in series with leads 1 and 4 brought out to the terminal block, and also two poles in series with leads 2 and 3. By simply changing the connections of the line leads and one or two short jumper wires at these terminals, the winding can be changed to operate on either of the two voltages given.

A similar system is also used on two or three-phase motors. Fig. 85 shows the method of arranging the leads of a three-phase winding and the connections from the winding to the terminal block. The two small diagrams on the right-hand side of this figure show the method of changing the line and jumper connections to operate the motor on either 440 or 220 volts. In this figure the windings of the motor are represented by the coils arranged in the delta connection, with separate leads for each section of the winding brought out to the terminal block.

Fig. 86 shows a diagram of a star-connected stator winding, and the arrangement of the leads from the separate winding sections to the terminal block. The small sketches on the right-hand side of this figure also show the method of arranging the line leads and jumpers to change this machine for operation on either 220 or 440 volts.

96. CHANGE IN NUMBER OF PHASES

In certain emergency cases it is desirable to know how to change a motor from three-phase to two-phase operation, or vice versa. The following example will illustrate the procedure that should be used in making a change of this kind. Suppose we have a machine that is connected three-phase and has 144 slots in the stator and a 24-pole winding. The coils are connected 4-parallel delta for 440 volts, and we wish to reconnect them for operation on two-phase at the same voltage. 144 coils connected for three-phase would have 144 ÷ 3, or 48, coils per phase. This would be connected for four-parallel circuits, so there would be 48 ÷ 4, or 12, coils in series across the line.

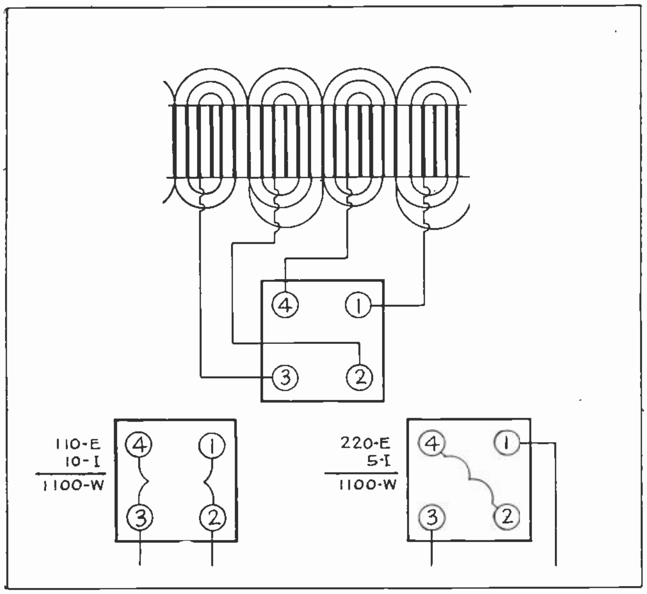

Fig. 84. This diagram shows how the terminals of a single phase winding can be arranged for convenient changing from series to parallel, so they can be operated on two different voltages.

Remember that these 12 coils are connected in series on 440 volts, so we would have approximately 36⅔ volts applied to each coil in the original winding. This winding is to be regrouped for two-phase, which means that if it is connected single circuit there would be 144 ÷ 2, or 72, coils in series. To maintain the same voltage on each coil, the same number of coils must be connected in series across the line as before; or 72 ÷ 12 = 6 parallel circuits in which we must arrange the coils for the two-phase winding.

According to the formula for determining coils per group, the three-phase winding would have (144 ÷ 24) ÷ 3, or 2 coils per group.

As a two-phase winding would have (144 ÷ 24) ÷ 2 or 3 coils per group, it will be necessary to reconnect some of the coil leads for this new grouping.

97. CHANGES IN FREQUENCY

Sometimes it is desired to change a motor which has been operating on one frequency so that it will operate on a circuit of another frequency. The most common frequency for alternating current circuits in this country nowadays is 60 cycles, but occasionally a 25-cycle circuit or one of some other odd frequency is encountered.

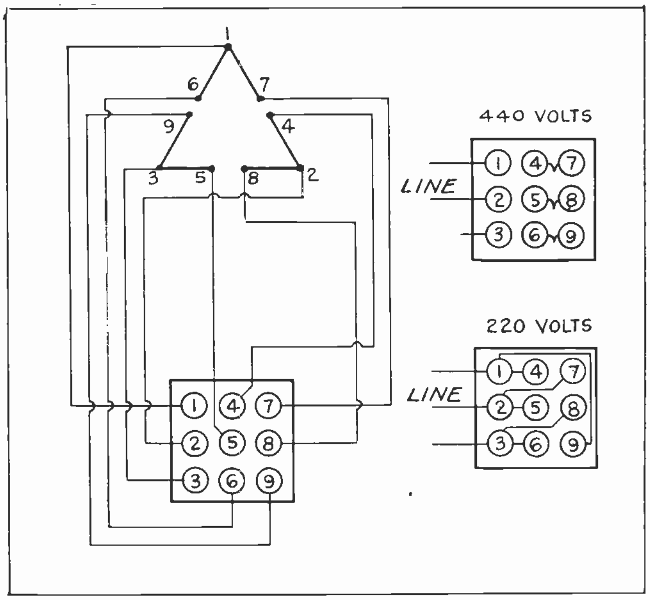

Fig. 85. Sketch showing the arrangement of the leads for a three-phase delta winding, and the manner in which they can be arranged on a terminal block for convenient voltage changes.

We have learned that when an induction motor is running, a rotating magnetic field is set up in the stator and that it is this field which induces the secondary current in the rotor and produces the motor torque; also that this same rotating field cuts across the coils in the stator itself and generates in them a counter-voltage which opposes the applied line voltage and limits the current through

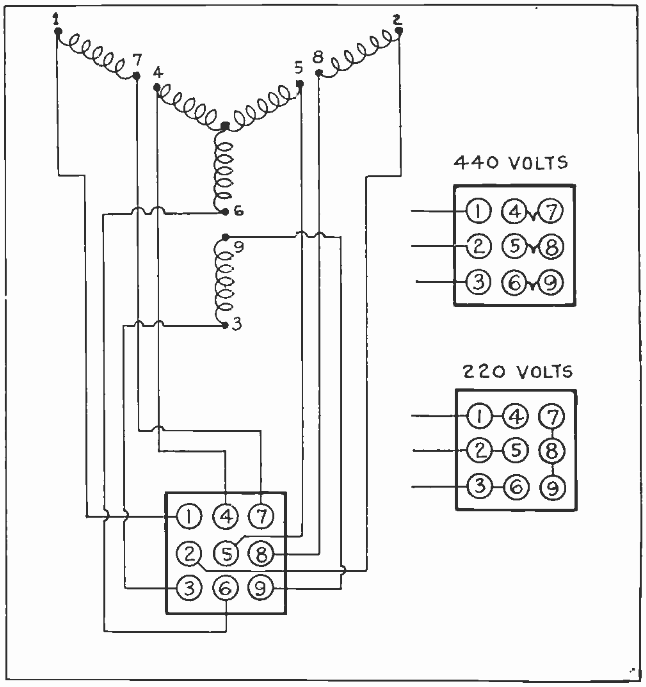

Fig. 86. The above diagram shows a winding which is connected star and has its leads all brought out to a terminal block for convenient change from 440 to 220 volts.

the winding. The speed of field rotation governs the strength of the counter E.M.F., and therefore regulates the amount of current which can flow through the winding at any given line voltage.

There are two factors that govern the speed of rotation of this magnetic field. These are the number of poles in the winding and the frequency of the applied alternating current. The effects of changing the number of poles will be explained in a later article. Any change that is made in the frequency of the current supplied to a motor should be offset by a change of voltage in the same direction, and in the same proportion.

This should be done so the current through the coils will be kept at the same value. For example, if a motor is to be changed from 30 to 60 cycles, the magnetic field will rotate twice as fast and the counter-voltage will be doubled. This means that if we are to maintain the same current value in the stator coils the line voltage should also be doubled. If the winding is to be operated on the same voltage at this higher frequency, the number of turns in each group across the line should be reduced to one-half the original number, in order to allow the same current to flow.

This procedure should, of course, be reversed when changing a motor to operate on a lower frequency.

The horse power of any motor is proportional to the product of its speed and torque or turning effort. So, when the frequency is varied and the stator flux kept constant, the horse power will vary directly with the change in speed.

98. CHANGING NUMBER OF POLES AND SPEED

It is very often desired to change the speed of motors for various jobs around manufacturing and industrial plants. This can be done by changing the number of poles in the stator windings of A.C. motors.

The speed of an induction motor is inversely proportional to the number of poles; that is, if the number of poles is increased to double, the speed will decrease to one-half; or, if the poles are decreased to one-half their original number, the speed will increase to double. This rule assumes that the speed of the rotor will be the same as that of the revolving magnetic field. There is, however, a small amount of **"slip"** between the speed of the rotor and that of the revolving field. This causes the rotor to turn slightly slower than the field.

A very simple formula which can be used to determine the speed of the rotating field of such motors and the approximate speed of the rotor is as follows:

$$\frac{120 \times \text{frequency}}{\text{poles}} = \text{R.P.M.}$$

When changing the number of poles of an induction motor, if the voltage is varied in the same direction and same proportion as the change produced in the speed, the torque will remain practically the same and the horse power will vary with the speed. Therefore, the horse power increases with the higher speeds and decreases at lower speeds, in exact proportion to the change of speed.

99. SPECIAL CONNECTIONS FOR CONVENIENT SPEED CHANGES

Generally the change in the number of poles is confined to a variation of only one pair of poles, as for example, changing from 6 to 8 poles or from 10 to 12, etc. There are, however, specially-built motors which have windings so connected that they can be changed from outside the motor by suitable arrangement of the leads and a switching device. Such motors can be changed to operate at either full speed or one-half of full speed.

Fig. 87. shows a lap three-phase winding which may be connected for either two or four poles by changing the connections of its leads outside the motor. This winding will produce the same torque at both speeds and will develop twice the power when running as a two-pole motor and the higher speed than it will develop as a four-pole motor and operating at the lower speed.

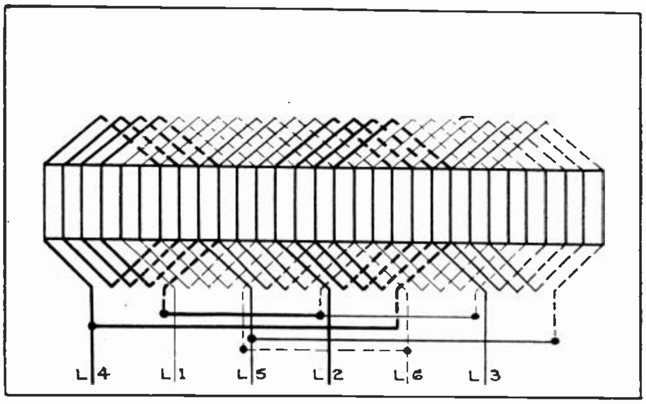

Fig. 87. A three-phase lap winding with six line leads brought out for convenient connection into either two or four poles. This enables the speed of the machine to be easily changed.

Six leads are brought outside the motor frame and the external connections should be made as follows: For two poles, connect the line leads to L 4, L 5, and L 6. Then connect L 1, L 2, and L 3 together. For four poles, connect line leads to L 1, L 2, and L 3, and leave L 4, L 5, and L 6 open or unconnected. This winding has two coil-groups per phase and when such a winding has as many groups in each phase as it has poles it is known as a **salient pole connection.**

You will notice that in the four-pole winding only two groups are used to build up four magnetic circuits in the stator. This is known as a **consequent pole connection.**

In connecting two-speed windings of this kind they are usually made full pitch for the low speed, and the coils regrouped for the high speed. When reconnecting windings for a different number of poles it will be necessary to change some of the group connections.

100. PROCEDURE OF RECONNECTING FOR CHANGE IN SPEED

The following example illustrates the necessary changes to make in reconnecting a machine for a different number of poles. Suppose we have a motor that has been operated at 300 R.P.M. on 25 cycles frequency. On inspecting the winding and connections we find that it is a 10-pole, 3-phase winding, connected series delta, and operating at 440 volts. We also find that the winding has 120 coils with a fractional-pitch coil-span of 1 to 12. Each group, therefore, has (120 ÷ 10) ÷ 3, or 4 coils. We wish to increase the speed of this motor 25% at the same voltage. 25% of 300 R.P.M., or the normal speed is 75; so the new speed should be 375 R.P.M.

To determine the number of poles that will be required for this speed we can use the formula:

$$\frac{120 \times \text{frequency}}{\text{speed}}$$

or, in this case, $\frac{120 \times 25}{375} = 8$

As the number of poles is to be changed, the coils per group must also be changed. This will be accomplished by reconnecting the coil leads; and, according to the formula for coil group, the number of coils for the new connection should be

$(120 \div 8) \div 3 = 5$ coils per group.

After the coils have been regrouped the next factor to consider is the voltage. We have already said that the voltage will change directly with and in proportion to the speed; so that a 25% increase in speed will also produce a 25% increase over the original voltage, which in this case would be 440 × 1.25, or 550 volts. This would be the voltage necessary to use for the winding if it were left connected series delta. But, as we wish to operate the motor on the same voltage as before, some change must be made in the connections to permit it to be operated at 440 volts.

If we change the original connection of series delta to a two-parallel star connection, the voltage would then be (550 ÷ 2) × 1.732, or 476 volts. If we consider the effect of the coil span on the voltage, we find that this will bring it about right with the 8 pole connection. The coil span already in the winding is 1 to 12, and of course, will remain the same for the new connection, as we are only changing the connections and not the coils. Full pitch coil span for the 8 pole connection would be (120 ÷ 8) + 1, or a span of 1 to 16; or covering 15 slots.

Leaving the coil span at 1 to 12, makes it 4 slots less than full pitch, for the new 8 pole connection. As each pole group represents 180 degrees; then, with a coil span of 15 slots, each slot will represent 180 ÷ 15, or 12 electrical degrees. The new coil span is 4 slots less than full pitch, and 4 × 12 = 48, the number of degrees less than full pitch. Full pitch would be 180 degrees; so 180 — 48 = 132 electrical degrees for the new coil span.

We recall that the voltage changes with the sine of an angle of one-half the number of electrical degrees. One-half of 132 squals 66, and the sine of an angle of 66 degrees is .9135. This means that the correct voltage to apply to the new winding will be 476 × .9135, or 435 volts. This will be for all practical purposes near enough to the desired voltage.

101. USE OF INSULATING VARNISH AND COMPOUNDS ON WINDINGS

All windings, whether D. C. or A. C., should be thoroughly impregnated with a good grade of insulating varnish before they are put into service.

This varnish serves several very important purposes. When properly applied it penetrates to the inner layers of the coils and acts as extra insulation of the conductors, thereby increasing the dielectric strength of the insulation between them. This compound within the coils and in their outer taping, greatly reduces the liability of short circuits between conductors and of grounds to the slots or frame.

When a winding is thoroughly saturated with insulating varnish and this varnish is properly hardened, it adds a great deal to the strength of the coils and holds the conductors rigidly in place. This prevents a great deal of vibration that would otherwise tend to wear and destroy the insulation, particularly in the case of alternating current windings where the alternating flux tends to vibrate the conductors when in operation.

Insulating varnish also prevents moisture from getting in the coils and reducing the quality of their insulation; and it keeps out considerable dust, dirt, and oil that would otherwise accumulate between the coils. Keeping out moisture, dust, and oil greatly prolongs the life of the insulation.

102. AIR DRY AND BAKING VARNISHES

There are many grades of insulating varnish, some of which require baking to "set" or harden them, and others which have in them certain liquids or solvents which make them dry and harden very quickly when exposed to air. The first type are called **baking** varnishes and the latter are called **air dry** varnishes.

Good air-dry insulating varnish will set or harden in from 20 to 30 minutes, but it should be allowed to dry out thoroughly for about 24 hours before the windings are put in service. Air dry varnish is not considered quite as good as the better grades of baking varnish. Therefore, the latter should be used wherever a bake oven or some means of applying heat is available.

103. METHODS OF APPLYING INSULATING VARNISH

There are three common methods by which insulating varnish can be applied to coils and windings. These are: dipping, brushing, and spraying.

Dipping is considered the best method and should be used for all small windings of stators and armatures, and for armatures and stator coils and field coils. To dip these coils or windings, a pan or tank of the proper size and depth will be required. Before dipping the windings they should be thoroughly dried out in a bake oven at about 212° F., in order to drive out all moisture and to heat the coils so that when they are dipped the varnish will rapidly penetrate to their inner layers.

The coils should be allowed to remain in the varnish until all bubbling has ceased. When they seem to have absorbed all the varnish possible they should be slowly withdrawn from the tank at about the same rate as the varnish flows from them of its own accord. This will give them a uniform coating with the least possible accumulation of varnish at the lower end. They should then be allowed to drain until the varnish stops dripping and becomes partially set. The time required for this will depend on the size of the winding or coils.

When dipping a large number of small coils, considerable time can be saved by arranging a drip board set at an angle, so the coils can be hung above it and the varnish which drips from them will run down the board and back into the tank. With this method other coils can be dipped while the first set are draining.

After all the surplus varnish is drained from the coils they should be baked. When placing them in the oven it is a good plan to reverse their positions, so that any excess varnish on the bottom ends will tend to flow back evenly over their surface when first heated.

104. GOOD VENTILATION IMPORTANT WHEN BAKING

When a large number of coils are being baked at one time and practically fill the oven, trouble is sometimes experienced with insufficient ventilation. If the air inside the oven is not continually kept moving through the coils, and fresh air constantly supplied, the vapors from the varnish will cause a green coating to form on the surface of the coils and greatly decrease the insulating qualities of the varnish. With large ovens small fans are sometimes used to force an air draft and insure good ventilation. Small ovens are usually provided with a chimney at the top and an air inlet at the bottom, so the heated air can rise and provide its own circulation.

Fig. 88 shows an electrical baking oven and a large D. C. armature to which a coat of varnish has been applied and which is ready for baking. This oven has an automatic temperature-control to keep the temperature uniform throughout the baking operation. Also note the ventilation chimney on top of the oven.

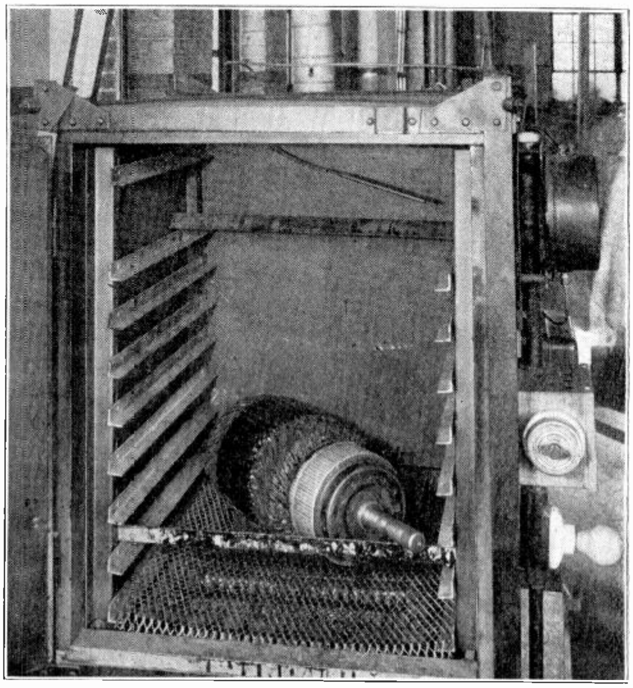

Fig. 88. This photo shows a D.C. armature in place in an electrical bake oven and ready for the insulating compound on the windings to be baked.

When applying the varnish with a brush, the winding should, if possible, be preheated to drive out the moisture and permit the varnish to flow deeper into the coils. Varnish can be applied with an ordinary paint brush, and this method is used where the dipping tank is not large enough to accommodate the winding, or where no dipping tank is available.

Spraying is used principally on large windings and gives a very good surface for a finishing coat.

The ends of coils should be given two or three coats of varnish as an added protection against mechanical damage and moisture, and to help prevent flash-overs to the frame of the machine.

105. PROPER TIME AND TEMPERATURES FOR BAKING

Fig. 89 shows a convenient table which gives the proper temperatures and approximate time in hours for baking insulating varnishes. You will note that when baking complete armature or stator windings more time is required to thoroughly bake the larger sizes. Also note that a slower baking produces a more elastic and better quality of insulation.

In emergency cases, where time is very inportant, the windings can be baked at the higher tempatures in a much smaller number of hours, but the varnish will be somewhat more brittle and inclined to crack or check when any strain is placed upon it. Never attempt to bake windings at temperatures very much higher than those given in the first column of this table, or you are likely to damage the insulation already on the coils. When a job doesn't need to be rushed, it is much better to bake it at the lower temperatures and for the longer periods given in the table, which will give a much more durable and dependable insulation.

In addition to the advantages already mentioned for this form of insulation, it also provides a smoother surface on the windings and coils, making them much easier to clean, either by means of a brush, compressed air, or by washing them with gasoline or some such solution to remove grease and oil.

Fig. 89-B shows a stator winding heavily coated with a solid mass of insulating compound applied by repeated dipping. Note the rugged protection this gives the winding. To remove a winding which has been treated in this manner it is necessary to heat it first, in order to soften the compound.

Size of Armature or Stator Core Diameter	248° F. Quick Baking	224° F. Elastic Baking	212° F. Extra Elastic Baking
Under 6 Inches	4 to 6 hrs.	6 to 8 hrs.	8 to 10 hrs.
6 to 12 Inches	12 hrs.	24 hrs.	36 hrs.
12 to 18 Inches	24 hrs.	36 hrs.	48 hrs.
18 to 24 Inches	36 hrs.	48 hrs.	60 hrs.

Fig. 89. This convenient table gives the proper temperature and time in hours for baking insulation of windings of different sizes.

106. TROUBLES OF INDUCTION MOTOR WINDINGS

By far the greater number of defects which occur in windings during service or operation are caused by short circuits, open circuits, and grounds. Water may have found its way into the coils, or oil from the bearings may have destroyed the quality of the insulation. Metallic dust and grit sometimes work into the windings and cause short circuits; or a static charge from a belt-driven machine may cause punctures or small pin holes in the insulation, which results in flash-overs and grounds.

Any one of the above mentioned faults is also likely to show up just after a motor has been rewound or repaired. So, if a machine doesn't operate properly after having been rewound, it is quite likely that some of the coils are connected wrong or that there is a short, open, or ground in some coils because of work carelessly done in the repair shop.

The average small induction motor when running properly is almost noiseless, and even in the larger motors only a uniform, gentle humming should be heard. This humming noise is due largely to vibration of core laminations, which are caused to vibrate slightly by the reversals of the magnetic field. This vibration will be in synchronism with the frequency of the alternating current in the windings. In addition to this humming, which is unavoidable even in the best of motors, there is also a slight whistling noise caused by the fan blades on the rotor, friction of the air with the revolving parts, and air passing through ventilation ducts. This air whistling is harmless and it will continue for a short period after the current is shut off and while the machine is still turning. If a motor is unusually noisy there is probably some defect responsible for the noise.

A deep, heavy growling is usually caused by some electrial trouble resulting in an unbalanced condition of the magnetic field in the windings.

If a shock is felt when the frame is touched it is quite sure evidence that one or more coils in the winding are grounded to the core or frame. This is a very dangerous condition with any voltage and particularly so with voltages above 220. A grounded coil on a 440-volt machine may result in a very dangerous shock, and it is for this reason that the frames of motors should be grounded when the machines are installed.

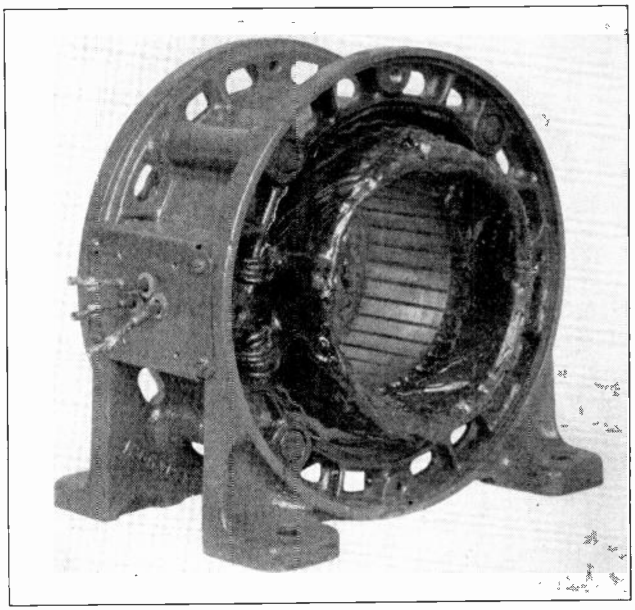

Fig. 89-B. The above photo shows a stator winding heavily impregnated with insulating compound. Note how insulation of this type affords mechanical strength and protection to the windings and would also prevent dirt, oil and moisture from getting in between the coils.

When the frames are grounded in this manner and a coil does become grounded, it will usually blow a fuse, thus indicating a defect at once.

Fig. 90 is a diagram of a three-phase winding in which are shown a number of the more common faults occurring in such windings. These faults are numbered and listed for your convenience in locating them.

1. The last coils in the second and fourth groups of phase "A" are grounded.
2. The last coil in the third group of phase "A" is shorted.

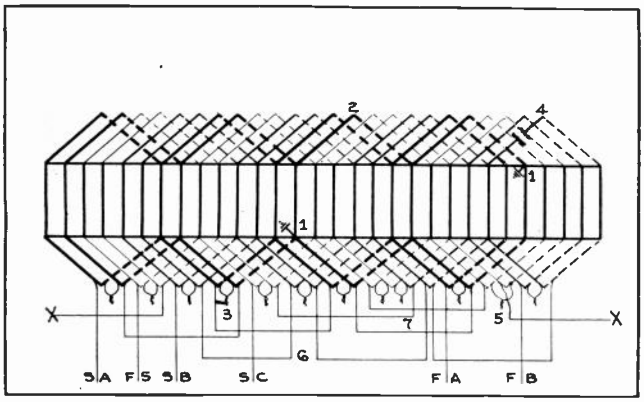

Fig. 90. The above is a diagram of a three-phase winding in which are shown a number of the more common faults that occur in stator windings.

3. The start and finish leads of the first coil in the second group of phase "A" are shorted together at the stubs.

4. The last coil in the fourth group of phase "B" is open.

5. The last coil in the third group of phase "C" is reversed.

6. The second coil group of phase "B" is reversed.

7. The second coil group of phase "C" and third coil group of phase "B" have wrong numbers of coils connected in them.

8. Another fault known as "reversed phase" occurs when the three starts are spaced in the wrong position. This fault is not shown in this sketch.

The following paragraphs describe in detail the methods of testing to locate these faults and also the method of correcting them.

107. GROUNDED COILS

The usual effect of one grounded coil in a winding is the repeated blowing of a fuse when the line switch is closed. Two or more grounds will give the same result and will also short out part of the winding in that phase in which the grounds occur. A quick and simple test to determine whether or not a ground it present in the winding, can be made with the test outfit shown in Fig. 91. This test set consists of several dry cells connected in series with a small test lamp and pair of test leads.

In place of the dry cells and low-voltage lamp, we can use two test leads connected to a 110-volt line and with a 10-watt lamp in series. In testing with such a set, place one lead on the frame and the other in turn on each of the line wires leading from the motor. The line switch should, of course, be open before making any test. If there is a grounded coil at any point in the windings the lamp will indicate it by lighting.

To locate the phase that is grounded, test each phase separately. In a three-phase winding it will be necessary to disconnect the start or delta connections. After the grounded phase is located the pole-group connections in that phase can be disconnected and each group tested separately. When the test leads are placed one on the frame and the other on the grounded coil group, the lamp will indicate the ground in this group by again lighting. The stub connections between the coils and this group may then be disconnected and each coil tested separately until we locate the exact coil that is grounded.

108. HIGH RESISTANCE GROUNDS

Sometimes moisture in the insulation around the coils, or old and defective insulation will cause a high-resistance ground that is difficult to detect with a test lamp. In this case we can use a test outfit consisting of a telephone receiver and several dry cells connected in series, as shown in Fig. 92. Such a test set will detect a ground of very high resistance, and this set will often be found very effective when the ordinary test lamp fails to locate the trouble.

109. REPAIRS FOR GROUNDED COILS

When the grounded coil is located it should either be removed and reinsulated, or cut out of the circuit, as shown in Fig. 93. At times it is inconvenient to stop a motor long enough for a complete rewinding or permanent repairs. In such cases, when trouble develops it is often necessary to make a temporary repair until a later time when the motor may be taken out of service long enough for rewinding or permanent repairs.

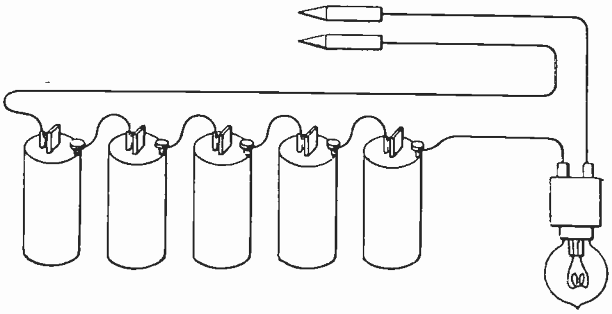

Fig. 91. Several dry cells in series with a low voltage test lamp and a pair of test leads or "points" make a very convenient test outfit for locating a number of the troubles in motor windings.

The sketch in Fig. 93 shows a coil group consisting of the three coils on the left. The single coil on the right is the first one of the following group which is not all shown in this sketch. Coil 2 is defective and the temporary repair will be the same whether the fault is a short, an open, or a ground. A jumper wire of the same size as that used in the coils, is connected to the bottom lead of coil 1, and across to the top lead of coil 3, leaving coil 2 entirely out of the circuit. Coil 2 should then be cut at the back of the winding, as shown by the dotted lines in the sketch. If the defective coil is grounded it should also be disconnected from the other coils, as shown on the diagram.

110. ONE OR MORE TURNS SHORTED TOGETHER

Shorted turns within coils are usually the result of failure of the insulation on the wires. This is frequently caused by the wires being crossed and having excessive pressure applied on the crossed conductors when the coils are being inserted in the slot. Quite often it is caused by using too much force in driving the coils down in the slots. In the case of windings that have been in service for several years, failure of the insulation may be caused by oil, moisture, etc. If a shorted coil is left in a winding it will usually burn out in a short time and, if it is not located and repaired promptly, will probably cause a ground and the burning out of a number of other coils.

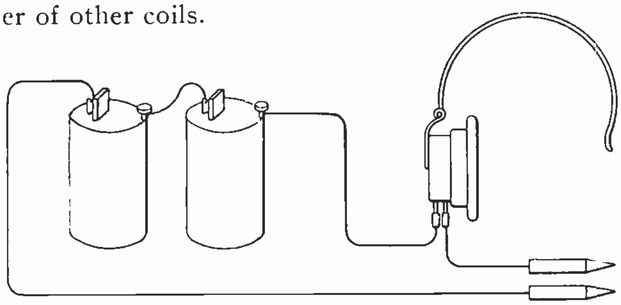

Fig. 92. A telephone receiver can also be used in series with dry cells and test leads for locating high resistance grounds occurring in windings.

One of the most practical ways of locating a shorted coil is by the use of a growler and thin piece of steel, similar to the method described for D. C. armatures. Fig. 94 shows a sketch of a growler in use in a stator. Note that the poles are shaped to fit the curvature of the teeth inside the stator core. The growler should be placed in the core as shown and the thin piece of steel should be placed the distance of one coil span away from the center of the growler. Then, by moving the growler around the bore of the stator and always keeping the steel strip the same distance away from it, all of the coils can be tested.

Fig. 95 shows a photo of a growler in use on a large stator. The steel strip is held over the slot the proper distance from the growler for the size of coils or coil span used in this case.

If any of the coils has one or more shorted turns the piece of steel will vibrate very rapidly and cause a loud humming noise. By locating the two slots over which the steel will vibrate, we can find both sides of the shorted coil. If more than two slots cause the steel to vibrate, they should all be marked and all shorted coils should be removed and replaced with new ones, or cut out of the circuit as previously described.

111. SHORTED COIL GROUPS

Sometimes one coil or a complete coil group becomes short circuited at the stubs or end connections. The test for this fault is the same as that for a shorted coil. If all the coils in one group are shorted it will generally be indicated by the vibration of the steel strip over several consecutive slots, corresponding to the number of coils in the group.

The stub connections should be carefully examined and those that appear to have poor insulation should be moved during the time that the test is being made. It will often be found that when the shorted stub connections are moved during the test the vibration of the steel will stop. If these stubs are reinsulated the trouble should be eliminated.

112. OPEN COILS

When one or more coils become open-circuited by a break in the turns or a poor connection at the stubs, they can be tested with a test lamp and dry cell such as previously shown and explained. If this test is made at the ends of each winding, an open can be detected by the lamp failing to light. The insulation should be removed from the pole-group connections and each group should be tested separately. After locating the coil group that is open, untape the coils between that group and test each coil separately. In making this test it is not necessary to disconnect the splices or connections.

In many cases the open circuit will be at the coil ends or stubs, due to a loose connection or broken conductor. If the trouble is at this point it can usually be located by careful observation and checking. If the trouble is a loose connection at the stub, it can be repaired by resoldering the splices; but if it is within the coil, the coil should either be replaced or have a jumper placed around it, as shown in Fig. 93, until a better repair can be made.

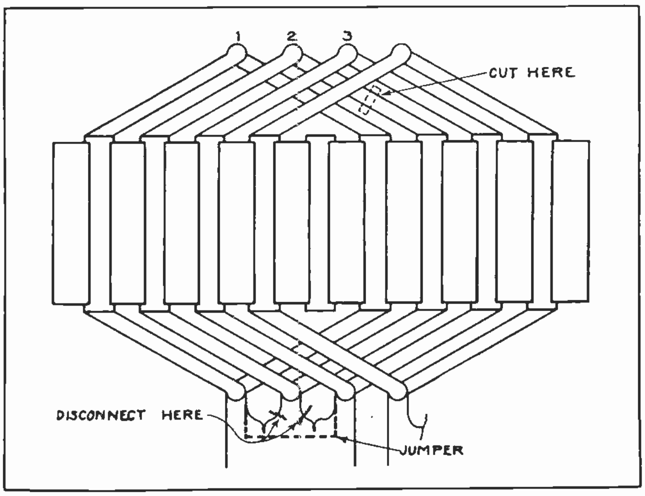

Fig. 93. This diagram illustrates the method of cutting out a defective coil with a jumper. In this manner a machine can be quickly repaired and kept in service until such time as the defective coil can be replaced.

113. REVERSED CONNECTIONS

Reversed coils cause the current to flow through them in the wrong direction. This fault usually manifests itself—as do most irregularities in winding connections—by a disturbance of the magnetic circuit, which results in excessive noise and vibration. The fault can be located by the use of a magnetic compass and some source of low-voltage, direct current. This voltage should be adjusted so it will send about one-fourth to one-sixth of full load current through the winding; and the D. C. leads should be placed on the start and finish of one phase. If the winding is three-phase, star-connected, this would be at the start of one phase and the star point. If the winding is delta-connected, the delta must be disconnected and each phase tested separately.

Place a compass on the inside of the stator and test each of the coil groups in that phase. If the phase is connected correctly, the needle of the compass will reverse definitely as it is moved from one coil group to another. However, if any of the coils is reversed the reversed coil will build up a field in the opposite direction to the others, thus cause a neutralizing effect which will be indicated by the compass needle refusing to point definitely to that group. If there are only two coils per group there will be no indication if one of them is reversed, as that group will be completely neutralized.

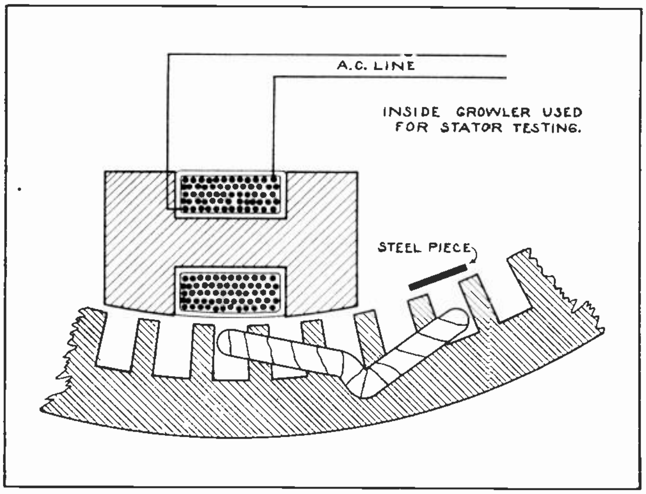

Fig. 94. The above view shows the manner in which a growler can be used to induce current in a shorted coil and indicate the short circuits by vibration set up in the steel strip at the right. This is a very simple and effective method of locating short circuits.

114. REVERSED COIL GROUPS

When an entire coil group is reversed it causes the current to flow in the wrong direction in the whole group. The test for this fault is the same as that for reversed coils. The winding should be magnetized with direct current, and when the compass needle is passed around the coil groups they should indicate alternately N. S., N. S., etc. If one of the groups is reversed, three consecutive groups will be of the same polarity. The remedy for either reversed coil groups or reversed coils, is to make a visual check of the connections at that part of the winding, locate the wrong connection, and reconnect it properly.

When the wrong number of coils are connected in two or more groups, the trouble can be located by counting the number of stubs on each group. If any mistakes are found they should be remedied by reconnecting properly.

115. REVERSED PHASE

Sometimes in a three-phase winding a complete phase is reversed by either having taken the starts from the wrong coils or by connecting one of the windings in the wrong relation to the others when making the star or delta connections. If the winding is connected delta, disconnect any one of the points where the phases are connected together, and pass current through the three windings in series. Place a compass on the inside of the stator and test each coil group by slowly moving the compass one complete revolution around the stator.

The reversals of the needle in moving the compass one revolution around the stator should be three times the number of poles in the winding.

In testing a star-connected winding, connect the three starts together and place them on one D. C. lead. Then connect the other D. C. lead and star point, thus passing the current through all three windings in parallel. Test with a compass as explained for the delta winding. The result should then be the same, or the reversals of the needle in making one revolution around the stator, should again be three times the number of poles in the winding.

These tests for reversed phases apply to full-pitch windings only. If the winding is fractional-pitch, a careful visual check should be made to determine whether there is a reversed phase or mistake in connecting the star or delta connections.

116. TESTING SPLIT-PHASE MOTORS

If a split-phase motor fails to start when a line switch is closed, the trouble may be due to one or several of the following faults:

1. Tight or "frozen" bearings.
2. Worn bearings, allowing the rotor to drag on the stator.
3. Bent rotor shaft.
4. One or both bearings out of alignment.
5. Open circuit in either starting or running windings.
6. Defective centrifugal switch.
7. Reversed connections in either winding.
8. Grounds in either winding or both.
9. Shorts between the two windings.

117. TIGHT OR WORN BEARINGS

Tight bearings may be caused by failure of the lubricating system; or, when new bearings are installed, they may run hot if the shaft is not kept well oiled.

If the bearings are worn to such an extent that they allow the rotor to drag on the stator, this will usually prevent the rotor from starting. The inside of the stator laminations will be worn bright where they are rubbed by the rotor. When this condition exists it can generally be easily detected by close observation of the stator field and rotor surface when the rotor is removed.

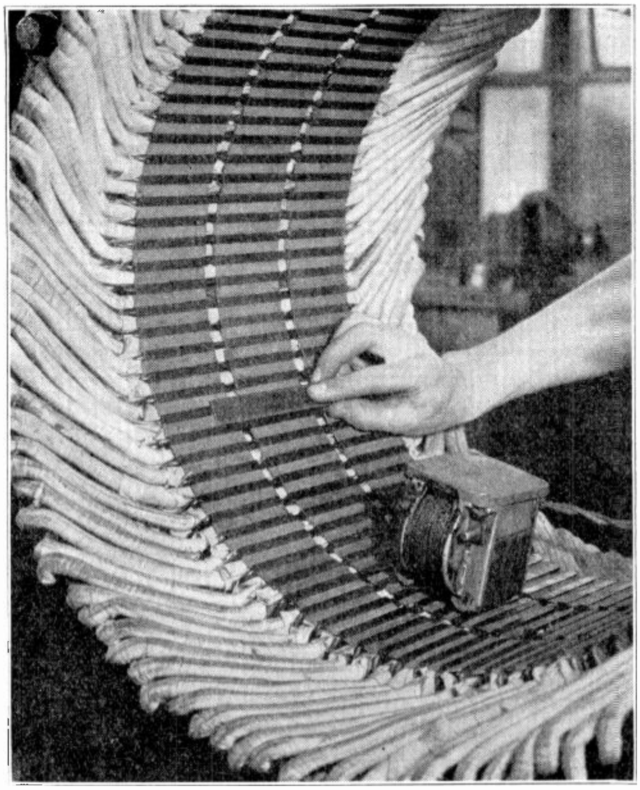

Fig. 95. This photo shows a growler in use in a large stator. Note the size and shape of these coils and the position of the steel strip which is just the width of one coil from the center of the growler.

118. BENT SHAFT AND BEARINGS OUT OF LINE

A bent rotor shaft will usually cause the rotor to bind when in a certain position and then run freely until it comes back to the same position again. An accurate test for a bent shaft can be made by placing the rotor between centers on a lathe and turning the rotor slowly while a tool or marker is held in the tool post close to the surface of the rotor. If the rotor wobbles it is an indication of a bent shaft.

Bearings out of alignment are usually caused by uneven tightening of the end-shield plates. When placing end-shields or brackets on a motor, the bolts should be tightened alternately, first drawing up two bolts which are diametrically opposite. These two should be drawn up only a few turns, and the others kept tightened an equal amount all the way around. When the end shields are drawn up as far as possible with the bolts, they should be tapped tightly against the frame with a mallet and the bolts again tightened.

119. OPEN CIRCUITS AND DEFECTIVE CENTRIFUGAL SWITCHES

Open circuits in either the starting or running winding will cause the motor to fail to start. This fault can be detected by testing across the start and finish of each winding with a test lamp.

A defective centrifugal switch will often cause considerable trouble that is difficult to locate, unless one knows where to look. If the switch fails to close when the rotor stops, the motor will not start when the line switch is closed. Failure of the switch to close is generally caused by dirt, grit, or some other foreign matter getting into the switch mechanism; or by weakened springs on the switch. The switch should be thoroughly cleaned with gasoline and then inspected for weak or broken springs.

If the winding is on the rotor, the brushes sometimes stick in the holders and fail to make good contact with the slip rings. This causes sparking at the brushes. There will probably also be a certain place where the rotor will not start until it is moved far enough for the brush to make contact on the ring. The brush holders should be cleaned, and the brushes carefully fitted so they move freely with a minimum of friction between the brush and the holders. If a centrifugal switch fails to open when the motor is started, the motor will probably growl and continue to run slowly. This is also likely to be caused by dirt or hardened grease in the switch.

120. REVERSED CONNECTIONS AND GROUNDS

Reversed connections are caused by improperly connecting a coil or group of coils. The wrong connections can be found and corrected by making a careful check of the connections and reconnecting those that are found wrong. The test with D. C. and a compass can also be used for locating reversed coils. Test the starting and running windings separately exciting only one winding at a time, with the direct current. The compass should show alternate poles around the winding.

The operation of a motor that has a ground in the windings will depend on where the ground is, and whether or not the frame is grounded. If the frame is grounded then when the ground occurs in the winding it will usually blow a fuse. A test for grounds can be made with a test lamp and dry cells, or a 110-volt lamp and leads. One test lead should be placed on the frame and the other on a lead to the winding. If there is no ground the lamp will not light. If it does light, it indicates a ground due to a defect somewhere in the insulation.

121. SHORT CIRCUITS

Short circuits between the two windings can also be detected by the use of a test lamp. Place one of the test leads on one wire of the starting winding and the other test lead on the wire of the running winding. If these windings are properly insulated from each other the lamp should not light. If it does light, it is a certain indication that there is a short between the windings. Such a short will usually cause part of the starting winding to burn out. The starting winding is always wound on top of the running winding; so, if it becomes burned out due to a defective centrifugal switch or a short cir-

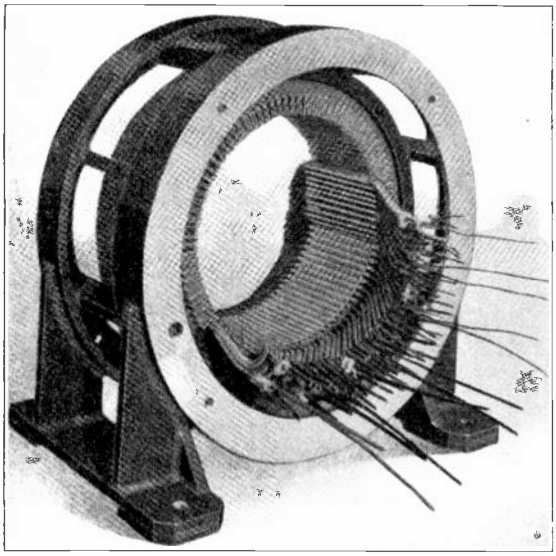

Fig. 96. The above photo shows a stator partly wound with factory-made coils. Coils of this type can be purchased ready made from many manufacturers so they can be quickly and conveniently inserted, and speed up repairs of the machines.

cuit, the starting winding can be conveniently removed and replaced without disturbing the running winding.

Single phase motors are very simple to rewind, and in many localities there are a great number to be rewound or repaired each year. Many of them need only to have the centrifugal switches cleaned and adjusted, or fitted with new springs. Others have only a loose or grounded connection which can be quickly repaired.

Many of our graduates start a fine business of their own, or make considerable money in their spare time from their regular job, by repairing small motors of fans, washing machines, and others. With a few lbs. of wire and a little insulation material many men do this work right at home in their own basements or garages.

In many cases you can get old motors of both small and large sizes, that the owners have planned to discard because they did not know they could be rewound or knew no one nearby who could rewind them. Such cases are splendid opportunities for you to get additional experience and practice and to get started in this line of work if you choose.

In any case, let us again emphasize the importance of applying the instruction covered in this section, and keeping familiar with it by frequent reference to its pages, for any question or problem of this nature which you may have.

You are very likely to find a knowledge of armature winding, connecting and testing very valuable on some job when you least expect it.

Welcome every opportunity to get added experience of this nature, and if you do your work properly in this department of the shops and use this Reference Set frequently, you should be able to make a definite success of any job of armature winding or testing.

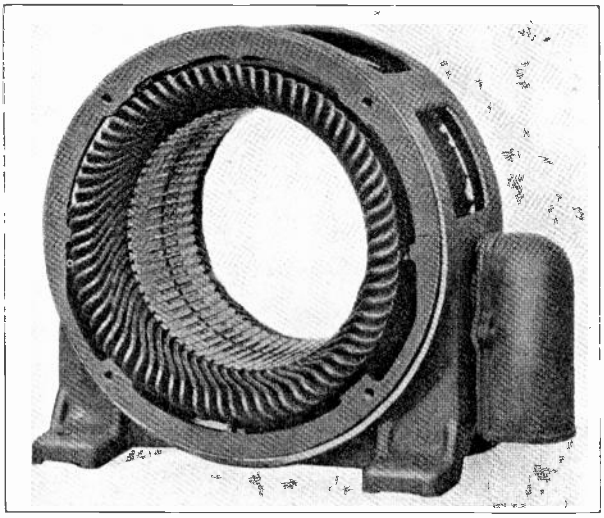

Fig. 97. This view shows the neat appearance of the stator in which the coils are of the proper size and shape and carefully placed in the slots.

COYNE
Electrical School
CHICAGO ~~ ILLINOIS
ESTABLISHED 1899

DIRECT CURRENT POWER AND MACHINES

Section One

D. C. Generators
Construction and Operating Principles
Types of Generators and Their Applications
Operation and Care of Generators
Parallel Operation
Three Wire Generators and Balancers
Commutation and Interpoles
for Generators and Motors

D. C. GENERATORS

Direct current energy and machines are very extensively used for traction work and certain classes of industrial power drives.

The principal advantages of D. C. motors are their very excellent starting torque and wide range of speed control.

For operating certain classes of machines which are difficult to start under load, and must be driven at varying speeds, or perhaps reversed frequently, D. C. motors are ideal. Their speed can be varied over a very wide range, both above and below normal speed.

Many thousands of factories and industrial plants use electric motors exclusively for driving their various machines, and in certain classes of this work D. C. motors are extensively used. They are made in sizes from ¼ h. p. to several thousand horse power each, and are used both for group drive and individual drive of various machines.

Fig. 1 shows an installation of large D. C. motors in use in a steel mill. These motors are located in the power room as shown, and are connected to shafts extending through the wall at the right, to drive the great rolls which roll out the hot steel in the adjoining room.

Fig. 2 shows a smaller motor used for driving a metal working machine. Where a separate motor is used for each machine in this manner, it is classed as individual motor drive. Hundreds of thousands of electric motors are used in this manner in industrial plants.

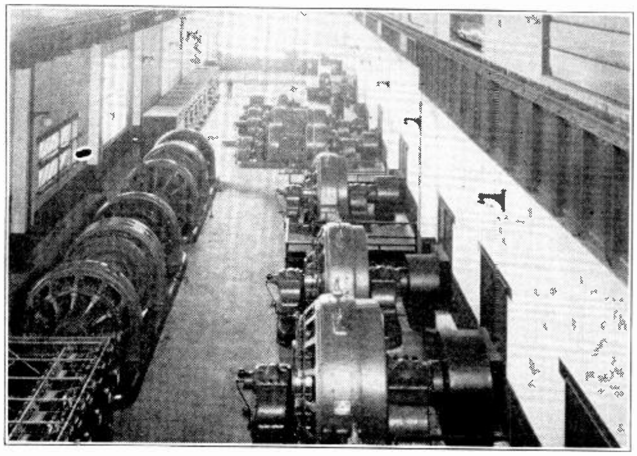

Fig. 1. This photo shows a group of large D. C. motors in use in a steel mill. Machines of this type, ranging from several hundred to several thousand horsepower each, are used in this work.

For operation of street cars and elevated trains in the cities, and electric railways across the country, series D. C. motors are extensively used, because their great starting torque enables them to easily start a loaded car or train from a standing position, and quickly bring it up to very high speeds.

Fig. 3 shows a powerful electric locomotive which is driven by several electric motors of several hundred horse power each.

D. C. motors are commonly made to operate on voltages of 110, 220, and 440, for industrial service; and from 250 to 750 volts for railway service.

Elevators in large skyscraper office and store buildings also use thousands of powerful D. C. motors, to smoothly start the loaded cars and swiftly shoot them up or down, ten, forty, or 70 stories as desired.

Here again their good starting torque, smoothness of operation, and accurate control for stopping exactly at floor levels, make them very desirable.

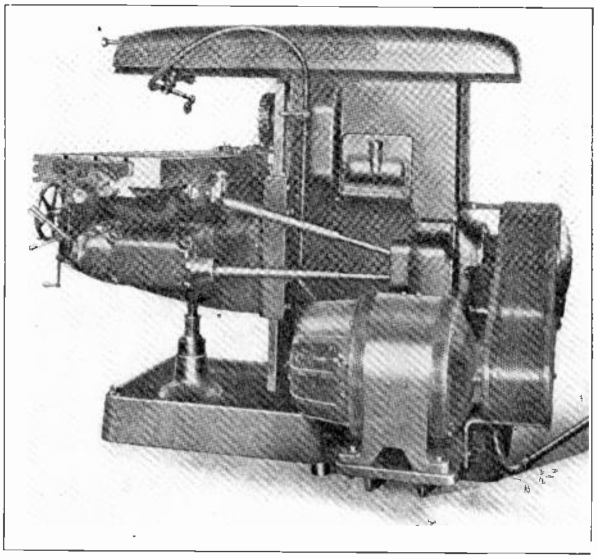

Fig. 2. Hundreds of thousands of small and medium sized motors are used to drive individual machines, as shown in this view.

One of the latest types of elevator equipment developed, uses direct current motors and what is known as variable voltage control. The variable voltage for each elevator motor is supplied by a separate D. C. generator, which is designed to vary its voltage as the load on the car varies, thus providing even speed regulation and extremely smooth starting and stopping.

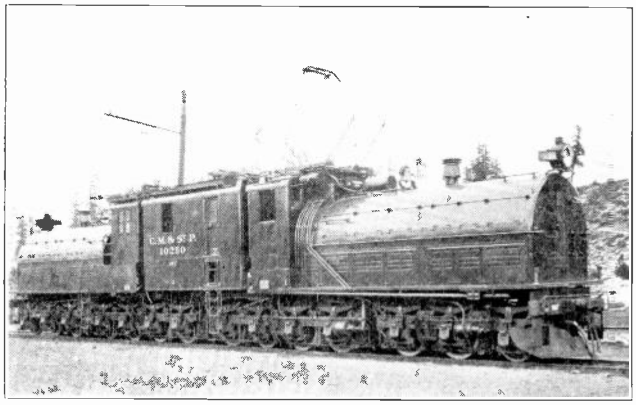

Fig. 3. Electrical locomotives of the above type often use six or eight powerful D. C. motors to turn their driving wheels.

Fig. 4 shows a large D. C. elevator motor with its cable drum and magnetic brake attached on the right hand side.

Because of the extensive use of direct current for elevators in large buildings, and for traction purposes, some large cities have their central business districts supplied with D. C., and the outlying districts where the power must be transmitted farther are supplied with A. C.

Direct current generators are used to supply the direct current wherever it is extensively used; and many privately owned power plants use D. C. generators because of the simplicity of their operation in parallel, where several are used.

In the operation of D. C. generators the speed at which they are driven is not as critical as it is with A. C. generators. Small D. C. generators can be belt driven; but this is not practical with A. C. generators, because a slight slip of the belt would cause their speed to vary, and make trouble in their parallel operation.

D. C. generators are made in sizes from 60 watts for automotive use, up to those of several thousand kilowatts for industrial and railway power plants. Their voltages range from 6 volts on automotive generators to 440 volts for industrial purposes; and on up to 600 and 750 volts for railway work.

The smaller sizes for belt drive operate at speeds from 300 to 1800 R. P. M., while the larger sizes which are direct connected to steam, oil, or gas engines, run at speeds from 60 to 250 R. P. M.

When these generators are driven by direct shaft connections to reciprocating steam engines, a large flywheel is usually provided on the same shaft to produce a more even speed. It will also deliver power to the generator during suddenly increased loads, until the engine governor can respond.

D. C. generators are not so well adapted for direct connection to steam turbines, because of the very high speeds of the turbines, and the great stress these speeds would set up in the commutators and windings of the generators.

When driven by turbines, they are usually coupled together by gears. For example a 360 R. P. M. generator can be driven by a 3600 R. P. M. turbine, through speed reducing gears with a ratio of 10 to 1.

Fig. 5 shows a small D. C. generator driven by a vertical steam engine. Note the flywheel used to maintain even speed and voltage, and also note the commutator and brushes which are in plain view on this generator.

Fig. 6 shows a larger D. C. generator also driven by a steam engine; which, in this case, is of the horizontal type and is located behind the generator. Note the very large flywheel used on this machine, and also the commutator and brush rigging on the left.

Direct current is not much used where the energy must be transmitted over distances more than one-half mile to a mile, as it requires high voltage to transmit large amounts of power over longer distances; and it is usually not practical to operate D. C. generators at voltages above 750.

Where large amounts of power are used in a compact area, such as in a large factory, or densely built up business section of cities, D. C. finds its greatest use.

Where direct current is desired for use at a considerable distance from the location of the power plant, alternating current may be used to transmit the energy at high voltage, to a substation in which a motor generator set is used to produce D. C.

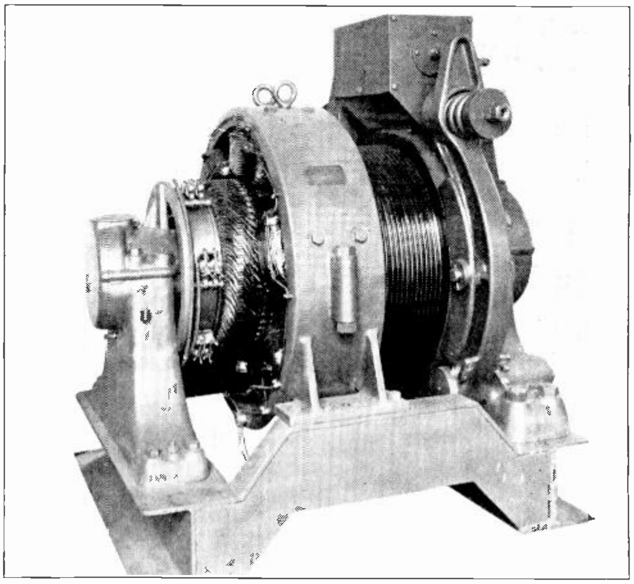

Fig. 4. This photo shows a D. C. elevator motor with the magnetic brake on the right end of the cable drum.

Fig. 7 shows a motor generator of this type, consisting of an A. C. motor on the left, driving a D. C. generator on the right. In this case the two machines are coupled directly together on the same shaft.

Other common uses for Direct Current are for electro-plating, electrolytic metal refining, battery charging, operation of electro-magnets, farm lighting plants, and automotive equipment.

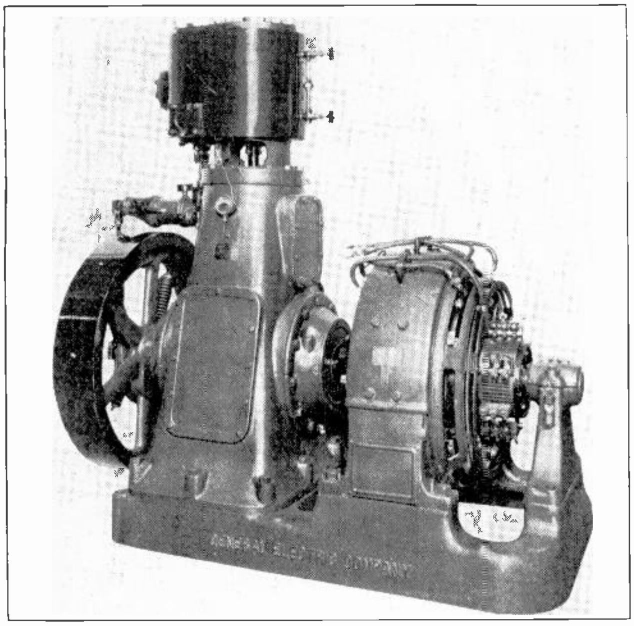

Fig. 5. Small engine-driven D. C. generators of the above type are used in a great number of privately owned power plants.

D. C. generators for electro-plating and electrolytic refining, are made to produce low voltages, from 6 to 25 volts, and very heavy current of several thousand amperes on the larger machines.

Garages use thousands of small motor generators, to produce D. C. for battery charging; and stores and plants using large fleets of electric trucks, charge their batteries with D. C. from larger charging generators.

Train lighting with the thousands of batteries and generators for this work is another extensive field for D. C. equipment.

Many thousands of D. C. farm lighting plants are in use throughout this country, supplying direct current at either 32 volts or 110 volts for light and power on the farms.

Powerful electro-magnets requiring direct current for their operation, are used by the thousands to speed up the handling of iron and steel materials in industrial plants, railway shops, etc. Fig. 8 shows a large magnet of this type which is used for lifting kegs of nails and bolts. This illustration also shows how the magnetism acts through the wooden kegs, proving what we have learned in an earlier section—that magnetism cannot be insulated.

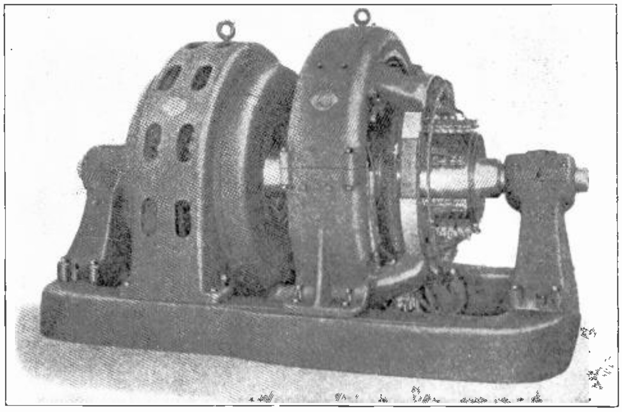

Fig. 7. Motor generator sets of the above type are very extensively used for changing A. C. to D. C. The D. C. generator is shown on the right and is driven by the A. C. motor on the left.

The automotive field is an enormous user of direct current equipment. Each modern automobile has a complete little power plant of its own, consisting of its D. C. generator, series D. C. starting motor, battery, lights, ignition coil, horn, etc. Many millions of D. C. generators and motors are in use on cars and trucks in this country alone. Fig. 9 shows a common type of 8 volt, shunt-wound, D. C. automotive generator.

Many powerful busses also use gas electric drive, having a gasoline engine to drive a D. C. generator, which in turn supplies current to D. C. motors geared to the axles. This form of drive provides

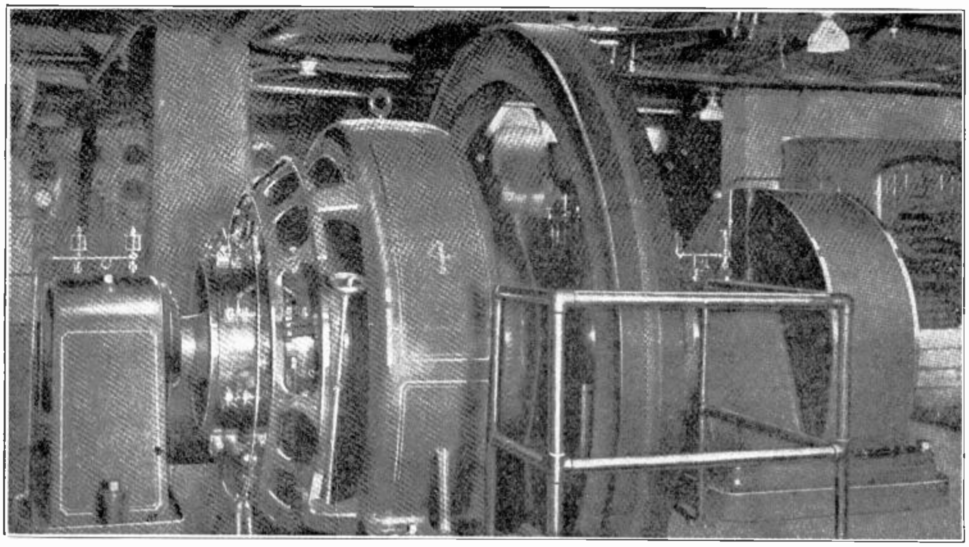

Fig. 6. This photo shows a large D. C. generator such as used in a great many industrial and railway power plants. Note the large fly wheel which is used to keep the speed of the generator even and "smooth out" the pulsations produced by the strokes of the engine.

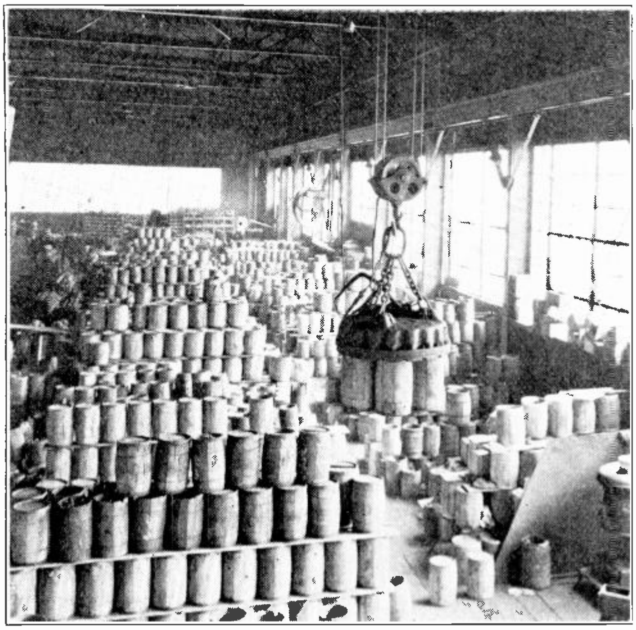

Fig. 8. Direct current is used to operate powerful electro-magnets of the above type for handling metal materials in industrial plants, warehouses, foundries, and iron yards. Note the manner in which these kegs of bolts are lifted by the magnet, even though the wooden heads of the kegs are between the magnet and the metal to be lifted. In plants where the principal supply of electricity is alternating current small motor generators are often used to supply the direct current for magnets of this type.

smoother starting and stopping, greater hill climbing ability, higher speeds on level roads, and eliminates gear shifting.

With this great variety of uses for direct current and D. C. machines I am sure you can see the value of making a thorough study of the equipment and principles covered in this section. The opportunities open to a trained man are certain to be much greater if he has a good knowledge of the operation, care and testing of direct current machines of all common types.

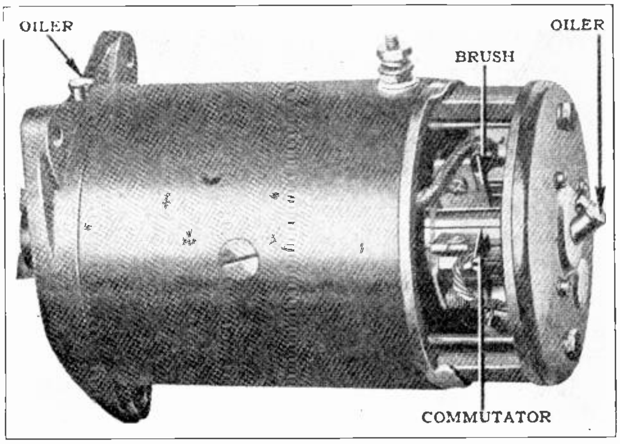

Fig. 9. Direct current generators of the above type are used by the millions on automobiles.

D. C. GENERATORS

It has already been stated in an earlier section, that D. C. generators and motors are almost exactly alike in their mechanical construction, and that in many cases the same machine can be used either as a motor or a generator, with only slight changes in the field connections, brush adjustment, etc. This is a very good point to keep in mind while studying the following material, as many of the points covered on construction, operation, load ratings, temperatures, etc., will apply to either a motor or a generator.

1. GENERATOR RATINGS

D. C. generators are always rated in kilowatts, a unit of electric power with which you are already familiar. It will be well to recall at this point, however, that one kilowatt is equal to 1000 watts, and approximately 1.34 h. p. You will also recall that the watts or kilowatts are equal to the product of the volts and amperes of any device or circuit. Therefore, with a machine of any given voltage, the greater the load in K. W., the greater will be the load in amperes of current carried by the windings of that machine.

The K. W. rating of a D. C. generator is the power load that it will carry continuously without excessive heating, sparking, or internal voltage drop.

If a load greater than a machine is designed or rated for is placed upon it for an extended period, it will probably give trouble due to one of the three causes mentioned; and if the overload is very great and left on too long it will cause the armature winding to burn out.

Nearly all generators are designed to be able to carry some overload for short periods without injury to the machine. This is usually from 15 to 25 per cent, for periods not longer than an hour or so.

2. OPERATING TEMPERATURES

The safe temperature rises in electrical machinery are determined by the temperatures the insulating materials will withstand without damage. All other materials in the machine are metals which may be subjected to quite high temperatures without much damage.

Of course the higher the temperature of the copper windings the greater their resistance will be, and the higher will be the losses due to voltage drop in the machine.

Ordinary combustible insulations such as silk, cotton, and paper, should never be subjected to temperatures higher than 212° F. (or 100° C). Mica, asbestos, and other non-combustible insulations may be subjected to temperatures as high as 257° F., or 125° C.

In establishing temperature rise ratings for electrical machinery, it is assumed that the temperature in the rooms where the machines are installed will never be over 104° F. or 40° C. This gives, for the ordinary insulations, a permissable rise of 212 — 104, or 108° F. or 60° C. For non-combustible insulations the permissable rise is 257 — 104, or 153° F. or 85° C.

Ordinary generators and motors are usually guaranteed by the manufacturers to operate continuously at full load, without exceeding a temperature rise of 35° C., 40° C., or 50° C., as the case may be.

The temperatures of machines can be checked by placing small thermometers in between, or close to, the ends of their windings. A good general rule to remember, is that if the hand can be held on the frame of the machine near the windings without great discomfort from the heat, the windings are not dangerously hot.

3. GENERATOR SPEEDS

The speeds at which generators are operated depends upon their size, type of design, and method of drive. The speed is of course rated in R. P. M. (revolution per min.) but another expression commonly used in referring to the rotating armatures of electrical machines is the **Peripheral Speed.** This refers to the travelling speed of the outside or circumference of the rotating element, and this surface is commonly known as the **Periphery.** This speed is expressed in feet per second or feet per minute.

The centrifugal force exerted on the armature conductors or commutator bars depends on the peripheral speed of the armature or commutator. This speed, of course, depends on the R. P. M., and the diameter of the rotating part.

The larger the armature, the farther one of its conductors will travel in each revolution. When a coil of a bi-polar, (two pole) machine makes one revolution, it will have passed through 360 actual or mechanical degrees and 360 electrical degrees. But a coil of a six pole machine will only have to rotate 120 mechanical degrees to pass two poles, and through 360 electrical degrees.

So we find that with the same flux per pole in the larger machine as in the two pole one, the same E. M. F. can be generated at a much lower speed with the multipolar machine.

Small generators of two or four poles and for belt drive, have long armatures of small diameter and may be operated at speeds from 120 to 1800 R. P. M. Larger machines for slower speed drive by direct connection to the shafts of low speed reciprocating engines, may have as many as 24 or more field poles, and operate at speeds of 60 to 600 R. P. M. Armatures for these lower speed machines are made shorter in length and much larger in diameter, so their conductors cut through the field flux at high speeds, even though the R. P. M. of the armature is low.

The peripheral speeds of armatures not only determine the voltage induced and the stresses on the coils and commutator bars, but also determine the wear on brushes and the type of brushes needed, as will be explained later.

4. TYPES OF DRIVES

Belt driven generators are not much used in large plants any more because of possible belt slippage, and the danger of high speed belts. A number of older plants and many small ones use belt driven machines, and with fairly satisfactory results if the proper belts and pulleys are used.

One advantage of small belt driven generators is that they can be designed for high speeds and are much lower in cost.

The engine type generator with the large diameter, slow-speed armature, direct connected to the engine shaft, is more commonly used. Steam engines are a very desirable form of prime mover for generators, because of their high efficiency, simple operation, and because they can be operated on the ordinary steam pressures.

Steam turbines are used to drive D. C. generators in plants where space is limited, because they are so small and compact.

Water wheels are used for prime movers where convenient water power is available. Generators for water wheel drive may be either low or high speed type, according to the water pressure and type of water wheel used.

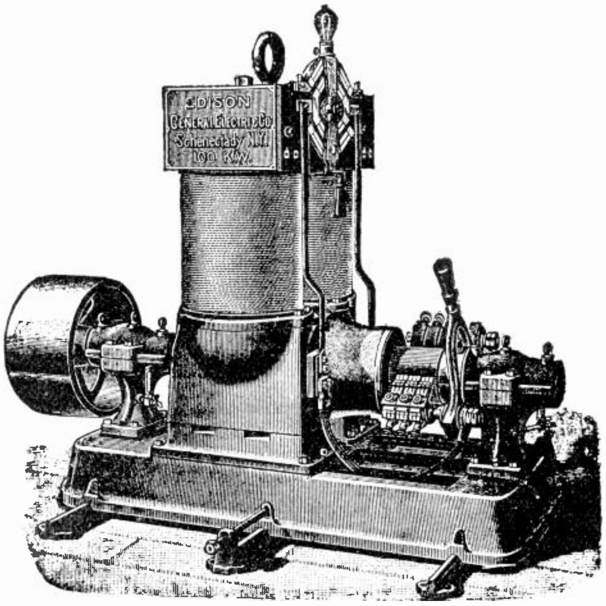

Fig. 10. An early type of D. C. generator developed by Thomas Edison. Note the construction of the field magnets of this machine.

5. MECHANICAL CONSTRUCTION OF D. C. GENERATORS

We have already learned that a generator is a device used to convert mechanical energy into electrical energy. We also know that the principal parts of a D. C. generator are its field frame, field poles, armature, commutator, brushes, bearings, etc.

The purpose of the field poles is to supply a strong magnetic field or flux, through which the armature conductors are rotated to generate the voltage in them.

D. C. generators were the first type commercially used, and the early types were very simply constructed with two large field poles in the shape of a huge bipolar electro-magnet. The armature was located between the lower ends of these magnets, as shown in Fig. 10. This figure shows one of the early types of Edison generators of 100 K. W. size.

6. FIELD FRAMES

Modern generators and motors have their field poles mounted in a circular frame, as shown in Fig. 11. This figure shows a two-pole field frame with the two large poles mounted on the inside of the frame. The field coils can be plainly seen on the poles.

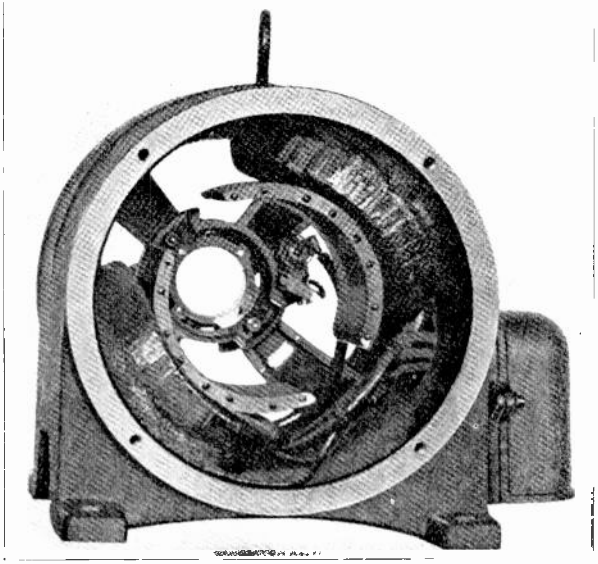

Fig. 11. Field frame of a modern generator or motor. Field coils located on the poles set up powerful magnetic flux in which the armature rotates.

The circular frame, in addition to providing a support for the field poles, also provides a complete closed path of magnetic material for the flux circuit between the poles. For this reason the frames are usually made of soft iron.

For the smaller and medium sized machines, they are generally cast in one piece with feet or extensions for bolting to a base. The inner surface is usually machined smooth where the poles are bolted to it, or in some cases the poles are cast as a part of the frame. The ends of the frame are machined to allow the bearing brackets to fit properly.

The frames for larger generators are usually cast in two pieces for more convenient handling during installation and repairs. They can be split either horizontally or vertically. Fig. 12 shows a frame of this type for an eight-pole machine. Note where the halves of the frame are joined together and bolted at each side.

7. FIELD POLES

There may be any equal number of field poles in a generator or motor frame, according to its size and speed. These poles are made of soft iron to keep the magnetic reluctance as low as possible.

The poles can be cast as a part of the frame on smaller machines, but are usually bolted into the larger frames. It is very important that they should fit tight to the frame to prevent unnecessary air gaps and reluctance in the magnetic circuit.

The ends of the poles which are next to the armature are usually curved and flared out into what are called **Pole Shoes** or **Faces.** This provides a more even distribution of the field flux over the armature core and conductors. These pole shoes are generally machined to produce an even air gap between them and the armature core.

Pole shoes are often made of laminated strips to keep down the induced eddy currents from the flux of the moving armature conductors. These laminated pole shoes are then bolted to the field poles. The machine in Fig. 11 has laminated pole shoes of this type.

In some large machines the entire field poles are often laminated for the same reason as the pole shoes are.

The field coils may be wound with round or square copper wire or with thin copper strip or

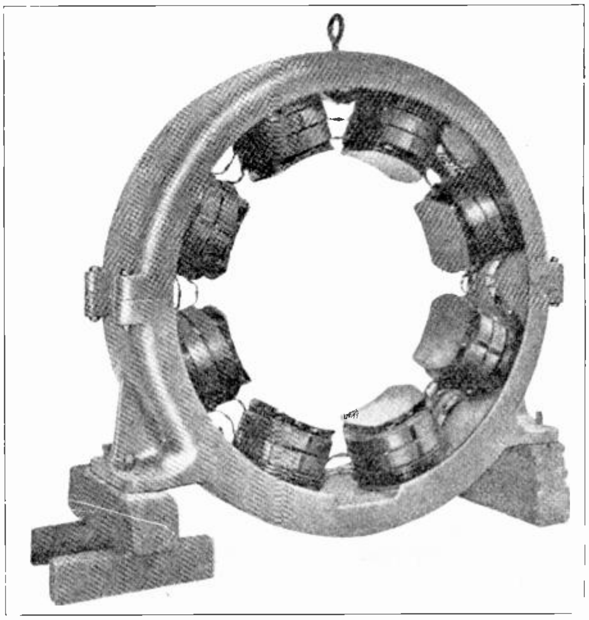

Fig. 12. Field frame for an eight-pole D. C. generator. Note the manner in which the frame is built in two sections for convenience when installing and making repairs.

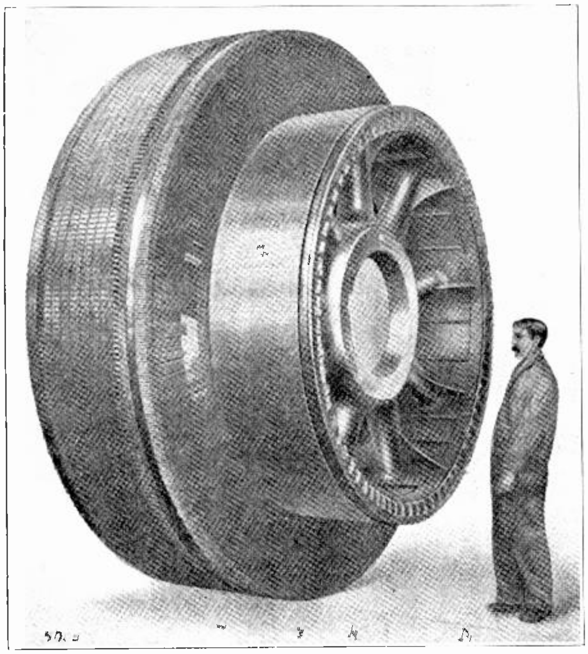

Fig. 13. This large armature shows the size to which D. C. generators can be built. An armature of this size would develop several thousand horsepower.

ribbon. These coils are connected to produce alternate north and south poles around the frame. In Fig. 12 the connections between the field coils can be noted.

8. ARMATURES

We have already learned a great deal about this very important part of D. C. machines, as armature construction and winding were thoroughly covered in the preceding section. A few of the points that are particularly good to keep in mind throughout the study of D. C. motors and generators will be briefly reviewed here.

The function of the armature, we know, is to carry the rotating conductors in its slots and move these swiftly through the magnetic flux of the field, in order to generate the voltage in them.

Armature cores are made of thin laminations of soft iron which are partially insulated from each other either by a thin coating of oxide which is formed on their surface when they are being heat treated or by a thin layer of insulating varnish. This laminated construction prevents to a great extent the eddy currents which would otherwise be induced in the core as it revolves through the field flux.

The very soft iron and steel in armature cores and its excellent magnetic properties also greatly reduce hysteresis loss. Also remember that the number of turns per coil and the method of connecting these coils will determine the voltage that is induced in a generator armature, or the countervoltage in a motor armature.

Fig. 13 shows a very large armature of a D. C. generator with the commutator on the right. This view clearly shows the coils in the slots, and the long risers which extend from the commutator bars up to these coil ends. This armature and commutator give some idea of the size to which the larger D. C. generators and motors can be built.

9. COMMUTATORS

A commutator, we already know, is a device used to rectify or change the alternating E. M. F. which is induced in the armature, to a direct E. M. F. or current in the external circuit. A commutator might also be called a sort of rotating switch which quickly reverses the connections of the armature coils to the external circuit as these coils pass from one pole to the next.

The manner in which the commutators are constructed of forged copper bars and insulated from each other by mica segments, was covered in a preceding article under D. C. armatures.

Figs. 14 and 15 show two excellent views of commutators of slightly different types. The smaller one in Fig. 14 is held together by the ring nut shown on the right, while the larger one is known as a "bolted type" commutator, and has bolts which draw the V-rings tightly into the grooves in the bars.

10. BRUSHES

The brushes slide on the commutator bars and deliver the current from a generator winding to the line; or, in the case of a motor, supply the current from the line to the winding. Most of these brushes are made of a mixture of carbon and graphite molded into blocks of the proper size. While this material is of fairly high resistance, the very short length of the brushes doesn't introduce enough resistance in the circuit to create much loss. The

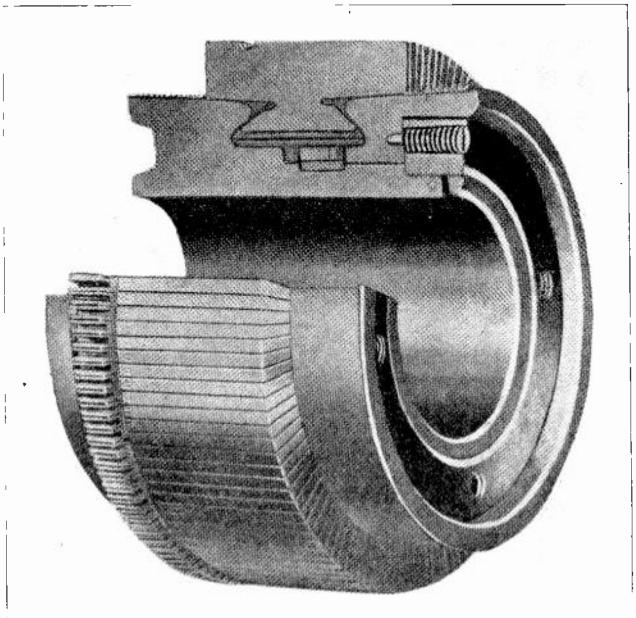

Fig. 14. The above photo shows an excellent sectional view of a commutator for a D. C. machine.

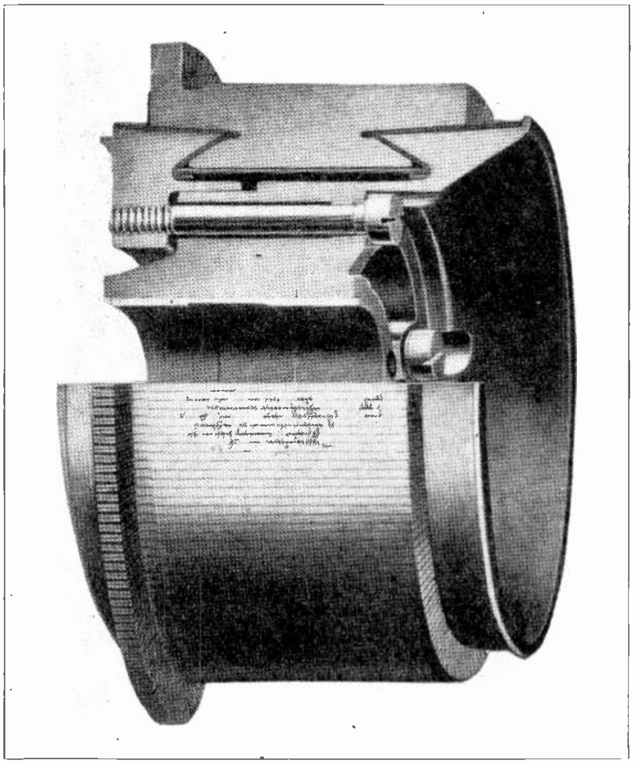

Fig. 15. This view shows another type of commutator in which the bars are held in place by bolts that are used to draw the clamping rings tight.

properties of the carbon and graphite tend to keep the commutator clean and brightly polished as the brushes slide on its surface. Some resistance in the brush material is an advantage, as it tends to prevent severe sparking during the period the commutator bars are short circuited. This will be explained in a later section on brushes.

Brushes must be of the proper size and material to carry without undue heat the full load currents of either a generator or motor. The carrying capacity of the brushes is a figure generally set by the manufacturers to indicate the number of amperes the brush will carry per square inch of cross-sectional area. This figure takes into account the heat due to overloads, friction, short circuit currents in the coils, voltage drop at the contact, and the heat produced by sparking.

Fig. 16 shows two common types of generator brushes to which are attached **Pig Tails** of soft stranded copper. These copper pig-tails are used for making a secure connection to carry the current from the brush to the holder and line.

11. BRUSH HOLDERS

Brushes are held firmly in the correct position with relation to the commutator by placing them in brush holders. The brush holders in common commercial use today may be classed under three general types, called **Box Type, Clamp Type,** and **Reaction Type.**

The box type holder was one of the first to be developed and used, while the clamp type has been developed in two forms known as the "swivel" and "parallel" motion types. Fig. 17 shows sketches of these several types of brush holders. The upper views in each case show the holders assembled on round studs, while the lower views show them bolted to rectangular studs.

A brush holder, in addition to providing a box or clamp to hold the brush in place, also has springs to hold the brush against the commutator surface and under the proper tension. Fig. 18-A shows a box-type brush holder and the springs which apply the tension on the brush, and Fig. 18-B shows this brush holder from the opposite side, mounted in the rocker ring. The requirements of good brush holders are as follows:

1. To provide means for carrying the current from the brush to the holder stud, either with a flexible copper connection or by direct contact between the brush and the holder. This must be accomplished without undue heating or sparking between the brush and holder, as this would result in a rapid burning and damage to the holders.
2. To provide means for accurately adjusting the brush on the commutator or ring.
3. To hold the brush firmly at the proper angle.
4. To permit free and quick movement of the brush in order that it may follow any uneven surface of the commutator or ring.

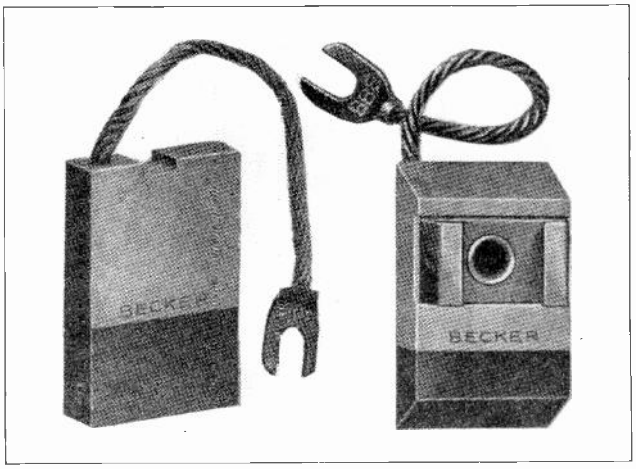

Fig. 16. Two common types of carbon brushes used for D. C. machines. Note the flexible copper leads used for connecting them to the brush holders.

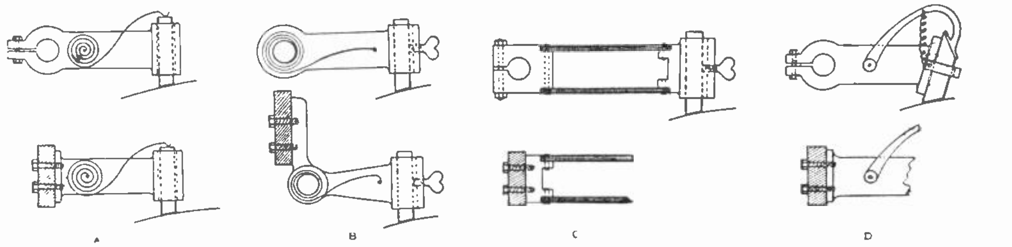

Fig. 17. The sketches on the left show several common types of brush holders. At "A" are two views of box-type holders. "B" and "C" are known as clamp-type holders; while "D" is a brush holder of the reaction-type.

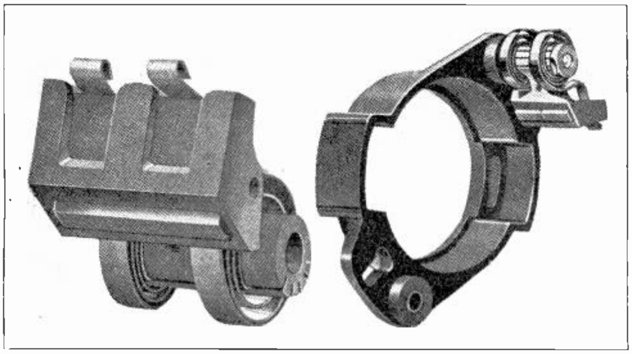

Fig. 18. Above are shown two box-type brush holders. The one at the left is simply attached to its holder stud sleeve and springs, while the one at the right is mounted on the holder stud which is fastened in a brush rocker arm.

5. To provide a tension spring of such length or shape that the tension on the worn brush will be very little less than that on a new brush.

6. To have a brush hammer so constructed that it will bear directly on the top of the brush and not give a side push either when the brush is full length or nearly worn out.

Fig. 19. shows a brush holder of the **Reaction Type,** in which the brush is held securely between the commutator surface and the **Brush Hammer** shown on the top in this view. The spring used with this brush holder is a coiled steel wire and can be seen on the back of the holder near the hammer hinge.

Brush holders are generally mounted or attached to a **Rocker Ring** by means of holder studs, as shown in Fig. 20. The holders can usually be adjusted on these studs both sidewise and up and down, to provide the proper spacing and tension. The purpose of the rocker frame or ring is to allow the entire group of brushes to be rotated through a small arc, so their position can be adjusted for varying current loads on the machine. This is often necessary on machines that do not have interpoles — as will be explained later.

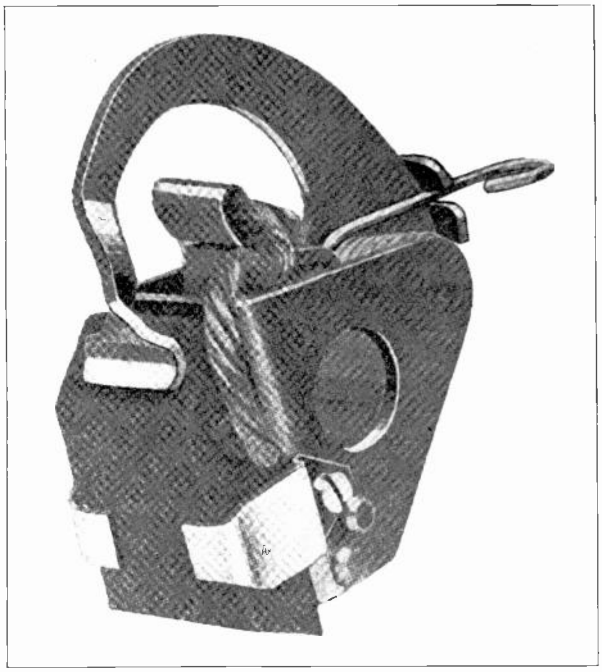

Fig. 19. Reaction-type brush holders keep the brush in place by the pressure of a "brush hammer", as shown on top of the brush in this view.

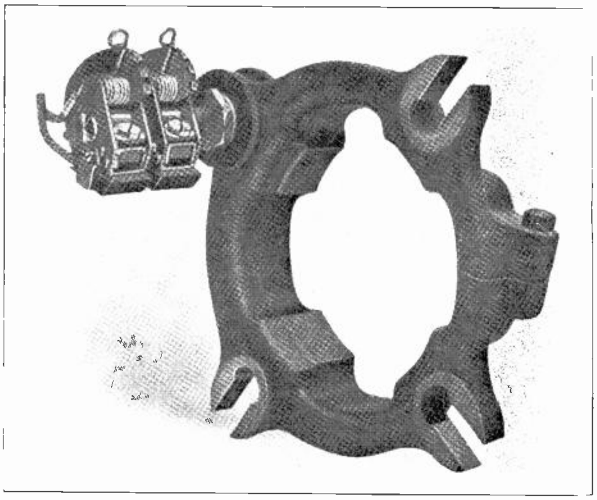

Fig. 20. Above are shown two brushes in their holders which are mounted on a brush rocker arm for a four-pole machine. Note the coil springs by which the brush tension on the commutator can be adjusted.

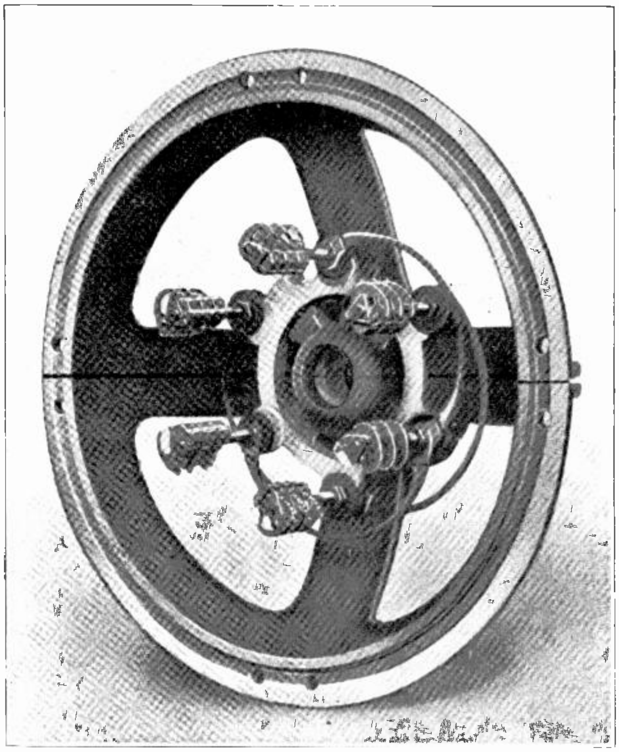

Fig. 21. This view shows a complete set of brushes and holders mounted on the rocker arm, which in turn is fastened in the end bracket of the machine.

Frequently there are two or more brushes mounted on each stud, as several small brushes are more flexible and will fit themselves to uneven commutator surfaces much better than one large brush. The brush holder studs are, of course, insulated from the rocker frames by means of fibre washers and bushings.

Fig. 21 shows six sets of brushes mounted on the brush holder studs and rocker frame, which in turn is mounted in the end bracket of the machine.

12. BEARINGS

As previously mentioned, the bearings of motors and generators are to support the armature properly centered between the field poles and to allow it to rotate freely when the machine is in operation. These bearings are mounted in bearing brackets and held firmly at the ends of the machine; or, in some cases, they may be mounted in pedestals which are separate from the field frame.

These bearings are of two common types, called sleeve bearings and ball bearings. Roller bearings are also used in some cases. Sleeve bearings are made of babbit metal on the medium and larger sized machines, while bronze is used for very small, high-speed machines. Bearing metal must always be of a different grade than that in the shaft, because two similar metals will rapidly wear away or eat into each other when they are rubbed together.

Sleeve-type bearings are commonly oiled by oil rings or chains which rotate in the oil well and carry a small amount of oil up on top of the shaft continuously while it is rotating. In other cases, on smaller machines, the oil is fed to the shaft by a cotton wick. Ball and roller bearings are lubricated with a light grade of grease.

A more thorough study of bearings will be given in a later section. The principal point to remember at this time in connection with bearings is the importance of keeping all bearings properly lubricated with clean oil. There should always be enough oil to be sure that the bearings are receiving it; but never oil them excessively and thus cause an overflow which may run into the winding and damage their insulation or get on the commutator and destroy its clean, bright surface.

OPERATING PRINCIPLES OF D. C. GENERATORS

We have learned that the E. M. F. or voltage in a generator is produced by electro-magnetic induction when the conductors of the armature are rotated through the lines of force of the field.

We also know that the amount of voltage produced depends on the number of lines of force which are cut per second. This in turn depends on the strength of the field, the speed of armature rotation, and the number of turns or coils in series between brushes.

The voltage that will be produced by a generator can be calculated by the formula:

$$E = \frac{P \times \emptyset p \times Cr \times RPM}{10^8 \times 60 \times M.}$$

in which:

P = No. of field poles

$\emptyset p$ = Total useful flux per pole

Cr = Total No. of inductors on armature

10^8 = 100,000,000 lines of flux to be cut per sec. by one conductor

60 = 60 sec. per min.

M = No. of parallel conducting paths between the + and — brushes.

For example, suppose we have a machine with 4 poles and with 200 armature inductors (conductors) in four parallel circuits between the brushes. The machine runs at 1200 R.P.M., and we will assume that the useful flux per pole is 3,000,000 lines.

$$\text{Then } E = \frac{4 \times 3{,}000{,}000 \times 200 \times 1200}{100{,}000{,}000 \times 60 \times 4}, \text{ or 120 volts.}$$

You may not need to use this formula often, but it serves to show what the voltage of generators depends on in their design and also to illustrate the factors of greatest importance in regulating the voltage of a generator.

It is an easy matter to determine the direction of induced voltage in the conductors of a generator by the use of **Fleming's Right Hand Rule,** which has been previously stated and explained.

The rule is one that you will have a great deal of use for in connection with generators, so we will repeat it here.

Place the first finger, thumb and remaining fingers of the right hand all at right angles to each other. (See Fig. 22). **Let the first finger point in the direction of magnetic flux from the field poles, the thumb in the direction of conductor rotation, and the remaining fingers will indicate the direction of induced voltage.**

This rule can be used either with diagrams or at the machine to quickly determine the direction of induced voltage in any conductor, where the direction of conductor movement and field polarity are known.

13. MAGNETIC CIRCUIT IN A GENERATOR

The number of conductors in the armature of a generator usually remains unchanged once it is built, and while the speed can be varied somewhat, the machine is generally operated at about the speed for which it is designed. So we find that the voltage adjustment or variation during the operation of a generator will depend largely upon the field strength. It would be well, therefore, to consider more in detail some of the factors upon which this field strength depends, and also the methods by which it can be varied.

Every generator or motor has what is called a **Magnetic Circuit**. This is the path followed by the flux of its field poles through the poles themselves, and through the armature core, and field frame — as shown in Fig. 23.

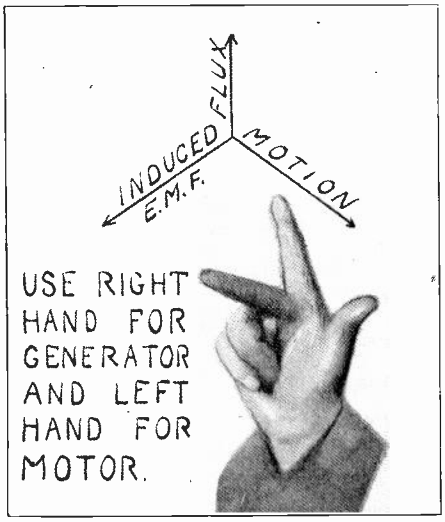

Fig. 22. This figure shows a method of holding the fingers to use the right-hand rule for determining direction of induced voltage in generators.

There are always as many magnetic circuits in a generator as it has poles. That is, a two-pole generator will have two magnetic circuits. A four-pole generator four magnetic circuits, etc. These magnetic paths must be continuous and will complete themselves through air unless iron or steel is provided. It is advisable, therefore, to have as much of the magnetic circuit through iron as possible, in order to reduce the reluctance of the circuit and increase the strength of the field.

The magnetic paths of commercial generators are completed through an all-iron or steel path, with the exception of the air gap between the armature core and field poles. If this air gap is increased it will weaken the strength of the field and reduce the generator voltage considerably.

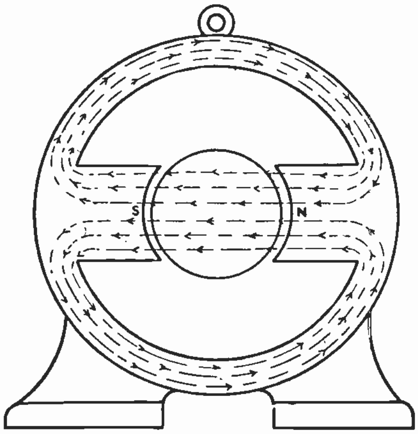

Fig. 23. The above diagram shows the magnetic circuit or path of the field flux in a simple two-pole machine.

Fig. 24 shows a sketch of a four-pole generator frame and the four magnetic circuits which it will have. It is very easy to determine the direction of flux at any pole of a generator if we know which ends of the pole are N. and S., and simply remember the rule that magnetic flux always travels from a north to a south pole in the external circuit. Examining Fig. 24 again, we find that the flux from either north pole divides and half of it goes to each of the south poles, then through the air gap and armature core which form the external circuit for the field poles. The internal circuit from the south pole back to the north pole is completed through the field frame. From this we see that each pair of field poles of a generator form a sort of horse-shoe magnet.

The area of the field poles and frame must be great enough to carry the flux without saturation. For highest efficiency, generators are operated at field densities considerably less than saturation, and generally at about 20,000 to 40,000 lines per sq. inch.

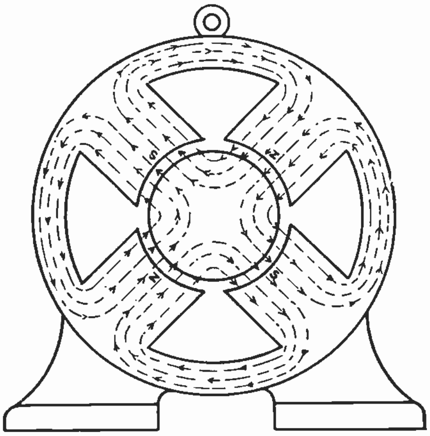

Fig. 24. Magnetic circuits in a four-pole machine. Note the direction of flux from N. to S. poles in the external circuit and from S. to N. poles in the internal circuit of the field.

14. FIELD EXCITATION

We know that the strong magnetic field of the poles in a generator is set up by direct current flowing through the coils on these iron poles. This current is called the **Field Exciting Current.** The strength of the field will, of course, depend on the number of turns in the field coils and the amount of current which is passed through them. So, by controlling excitation current with a rheostat, we can readily adjust the strength of the field and the output voltage of the generator.

Generators are classed as either **Separately Excited** or **Self-Excited,** according to the manner in which their coils obtain the exciting current.

A separately excited generator is one that has its field excited from some source other than its own armature. This source may be either a storage battery or another small D.C. generator. Alternating current cannot be used to excite the field poles of either a D.C. or A.C. generator. So alternators are practically always separately excited by current from storage batteries or D.C. generators. Separately excited D.C. generators are sometimes used for plating machines and work of this type, and have their field coils wound for a certain voltage. This voltage may range from 6 to 25 for battery excitation; and from 110 to 220 when excited from another generator.

Fig. 25 shows a sketch of a simple two-pole D.C. generator which has its field separately excited from a storage battery. Note the field rheostat which is provided to vary the field current and the generator voltage.

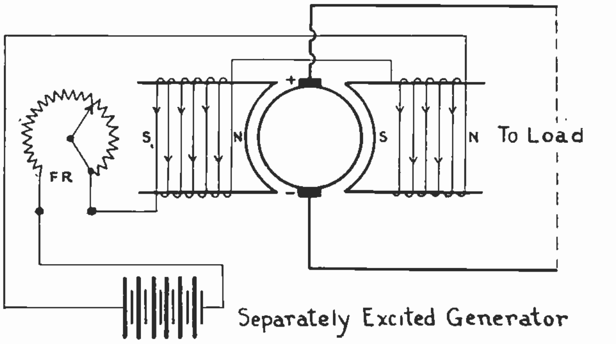

Fig. 25. This diagram shows a simple D. C. generator which has its field separately excited from a storage battery.

A self-excited generator is one that receives its field current from its own armature winding. Fig. 26 shows a sketch of a simple generator of this type. You will note that the field coils are connected across the positive and negative brushes of the armature in parallel with the line and load. The field will at all times receive a small amount of D. C. from the armature, whether there is any load connected to the line or not. Practically all commercial D.C. generators are self-excited.

15. BUILDING UP VOLTAGE IN A GENERATOR

With a separately excited generator, as soon as the circuit is closed from the source of direct current for the field, the field will be magnetized at full strength, and the generator voltage will build up immediately as soon as the machine goes up to full speed.

A self-excited generator must build up its voltage more gradually from the small amount of residual magnetism in the poles when the machine is started. You will recall that residual magnetism is that which remains in or is retained by the iron of the field poles even when their current is shut off. This residual magnetism, of course, produces only a very weak field.

When the machine is first started up and the armature conductors begin to cut this weak residual field, a very low voltage is generated in them. As the field is connected to the armature this first low voltage slightly increases the strength of the field. Then as the conductors cut through this slightly stronger field a still higher voltage is induced in them. This increases the field strength still more, which in turn builds up a greater voltage in the armature and still further field strength. This continues, and the strength of the field as well as the armature voltage keep on getting greater, until the point of **Saturation** is reached in the field poles.

The saturation point, you will remember, is when a magnetic circuit is carrying its maximum practical load of flux. When this point is reached it would require a considerable increase of current in the field coils to make even a small increase in the flux of the poles. So we find that self-excited generators build up their voltage gradually from residual magnetism as the machine comes up to speed.

Sometimes it may require a few seconds after the machine has reached full speed for its voltage to come up to normal value.

16. FAILURE TO BUILD UP VOLTAGE

With self-excited generators, it is, of course, necessary that the flux lines produced by the field coils be of the same polarity as the residual magnetism in the iron of the poles. Otherwise, the first low voltage applied to the field coils would tend to neutralize the residual magnetism and cause the generator to fail to build up its voltage. For this reason, self-excited generators will build up voltage only when rotated in the proper direction. Generators may, however, be made to build up voltage in the opposite direction of rotation by changing the field connections and exciting them from some separate source to build up voltage the first time.

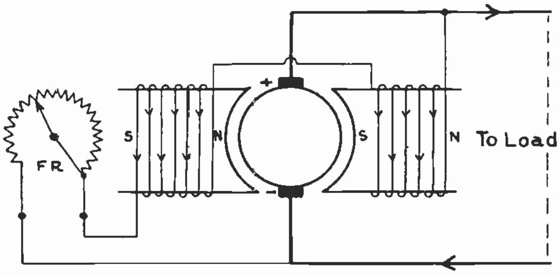

Fig. 26. This simple two-pole machine has its field coils self-excited by connection to its own armature brushes. Note the field rheostat at F. R., which is used to control the field strength.

After a generator has been idle for quite a period it sometimes loses its residual magnetism to such an extent that it will not build up voltage until it is first separately excited. Some of the causes of failure of a generator to build up voltage are as follows: Weak or dead residual magnetism, low speed, poor brush-contact on the commutator, severe overloads, open field circuits, or high resistance connections.

Removing the cause of the trouble will usually start the machine generating, but if it does not a low voltage storage battery or some other source of direct current applied to the field coils momentarily and in the proper direction will generally cause the machine to promptly build up voltage again.

On some generators it is necessary to cut out part or all of the resistance of the field rheostat before the machines will build up voltage.

17. VOLTAGE ADJUSTMENT AND REGULATION

When a generator is running at normal speed, its voltage can be conveniently controlled and adjusted by means of the field rheostat, as shown in Figs. 25 and 26. On most D.C. generators this adjustment is made manually or by the operator, putting resistance in or out of the field circuit by means of this rheostat. In some cases automatic voltage regulators are used to control this voltage according to the load on the machine. This automatic regulating device will be explained later.

The terms "control" and "adjustment" refer to changes made in the voltage by the operator or automatic device. The term "voltage regulation" refers to some change in the voltage which the machine makes of its own accord as the load is changed or varied. This change is inherent in the machine and is determined by its design and construction.

18. NEUTRAL PLANE

The neutral plane in a generator is that point between adjacent field poles at which the armature conductors are traveling parallel to the lines of force, and in a very weak field. Normally, when the generator is not carrying a load this neutral plane is half way between adjacent poles of opposite polarity, as shown in Fig. 27.

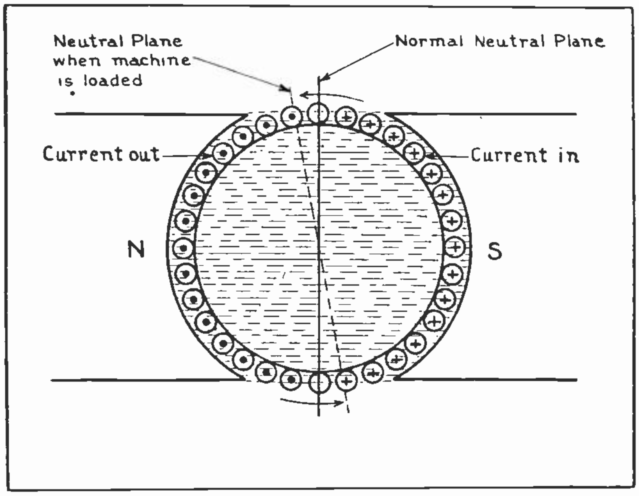

Fig. 27. This diagram shows the normal path of flux through the armature of the generator when the machine is not operating under load. Note the position of the normal neutral plane and also the position this plane takes when a machine is loaded.

When the conductors are passing through this point they do not generate any voltage, as they are not cutting across the lines of force. It is at this point that the commutator bars attached to the conductors usually pass under the brushes, where they are momentarily short circuited by the brushes. If the brushes were allowed to short circuit coils while they were passing through a strong flux under a pole, and generating appreciable voltage, it would cause very severe sparking at the brushes. So it is important that the brushes be adjusted properly for this neutral plane.

19. ARMATURE REACTION

In addition to the flux which is set up between the field poles from their coils and exciting current, there is also to be considered the flux around the armature conductors. When a load of any kind is connected to a generator and its voltage begins to send current out through the line and load, this current, of course, flows through the armature conductors of the generator as well.

The greater the load placed on the machine the greater will be the current in the armature conductors and the stronger will be the flux set up around them.

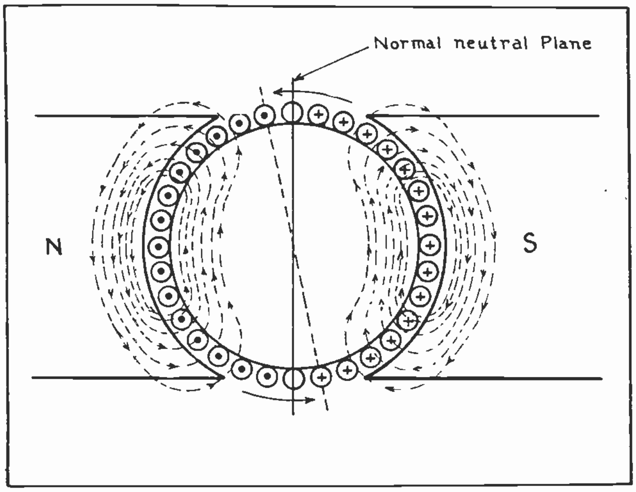

Fig. 28. This sketch shows the magnetic flux set up around the armature conductors of the simple two-pole machine when current is passing through them.

The armature flux is set up at right angles to the flux of the field poles, and therefore tends to distort the field flux out of its straight path between poles. This effect is known as **Armature Reaction.**

Fig. 28 shows the position of the armature flux as it would be when set up by current in the conductors, if there were no field flux to react with it. In actual operation, however, the armature and field flux of the generator are more or less mixed together or combined to produce the distorted field shown in Fig. 29. Here we see that the lines of force from the field poles have been shifted slightly out of their normal path and are crowded over toward the tips of the poles which lie in the direction of the rotation of the armature. This causes the field strength to be somewhat uneven over the pole faces, and more dense on the side toward which the armature is rotating.

You will also note that this distortion of the field has shifted the neutral plane, which must remain at right angles to the general path of the field flux.

As the armature flux depends on the amount of current through its conductors, it is evident that the greater the load on the machine, the greater will be the armature reaction and field distortion;

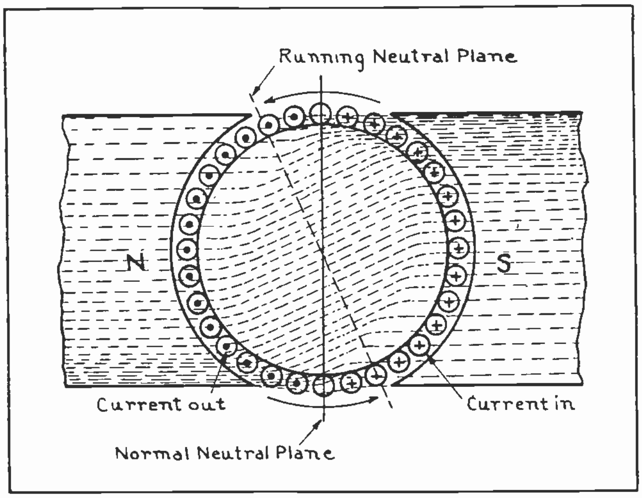

Fig. 29. This view shows the manner in which the magnetic lines of the field are distorted from their normal path by the effect of armature reaction. The neutral plane is shifted counter clockwise, or in the direction of rotation as shown by the dotted line.

and the farther the neutral plane will be shifted from its original position. So unless a generator is provided with some means of overcoming the effect of armature reaction, it will be necessary to shift the brushes with varying loads in order to obtain sparkless commutation.

Some machines are provided with commutating poles or interpoles, as they are sometimes called, which are placed between the main field-poles to neutralize this feature of armature reaction and thereby eliminate the necessity of shifting the brushes with changes of load. These poles and their operation will be more fully explained later.

The tendency of the armature flux to distort the field flux constantly exerts a force in the opposite direction of rotation and this force is what requires more power of the prime mover to drive the generator when its load is increased.

20. ARMATURE RESISTANCE AND I. R. LOSS

All armature windings have some resistance to the flow of the load current through them. While this resistance is very low and usually only a fraction of an ohm, it nevertheless causes a certain amount of voltage drop in the internal circuit of the armature. In other words, a certain small amount of the generated voltage is used to force the load current through the resistance of the armature winding. The greater the load on a generator, the greater will be the voltage drop through the armature.

As we know, this voltage drop is always proportional to the product of the amperes and ohms; and for this reason it is often referred to as **I. R. Drop, or I. R. Loss.**

We can also determine the watts lost in an armature, or converted into heat because of its resistance, by squaring the current and multiplying that by the resistance, according to the watts law formula. Therefore, $I^2 \times R$ will equal the watts lost in an armature due to its resistance. In which:

I = the load current

R = the resistance of the armature only.

This armature resistance can be measured with instruments connected to the commutator bars at the brush locations; or it can be calculated, if we know the size of the wire, the length of the turns in the coils, and the number of paths in parallel in the armature.

21. VOLTAGE DROP IN BRUSHES AND LINES

There is also a certain amount of voltage drop at the brushes of a generator which is due to the resistance of the brushes themselves and also the resistance of the contact between the brushes and commutator. This resistance is also very low and will cause a voltage drop of only about one or two volts on ordinary machines under normal load.

In addition to the voltage drop encountered in the generator, we also have the drop in the line which leads from the generator to the devices which use the current produced by the generator.

Knowing that the voltage drop in both the line, or external circuit, and the generator internal circuit will vary with the amount of load in amperes, we can see the desirability and need of some voltage adjustment or regulation at the generator, to keep the voltage constant at the devices using the energy.

GENERAL TYPES OF D. C. GENERATORS

Direct current generators can be divided into several classes, according to their field construction and connections. They are called respectively: **Shunt Generators, Series Generators,** and **Compound Generators.**

The shunt generator has its field coils connected in shunt or parallel with the armature, as shown in Fig. 30-A. Shunt field coils consist of a great many turns of small wire and have sufficient resistance so that they can be permanently connected across the brushes and have full armature voltage applied to them at all times during operation. The current through these coils is, therefore, determined by their resistance and the voltage of the armature.

Series generators have their field coils connected in series with the armature, as shown in Fig. 30-B; so they carry the full load current. Such coils must, of course, be wound with heavy wire in order to carry this current and they usually consist of only a very few turns.

Compound generators are those which have both a shunt and series field winding, as shown in Fig. 30-C.

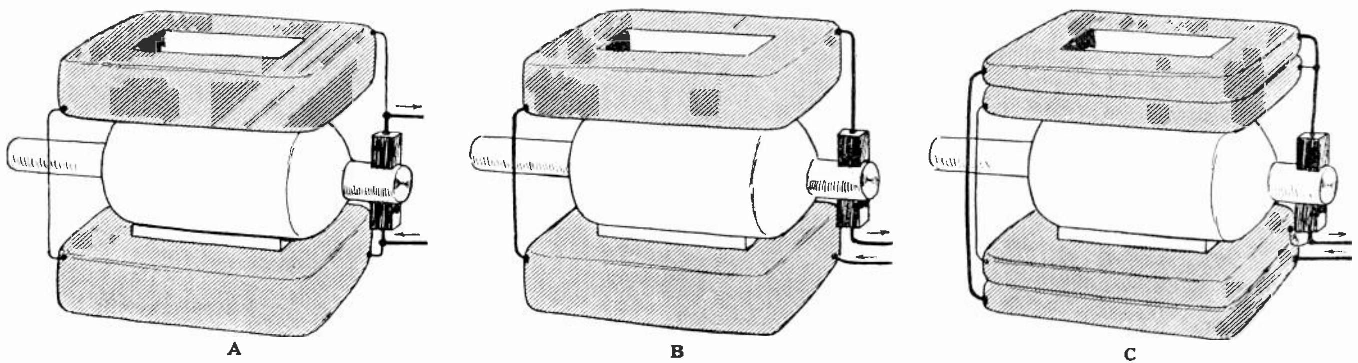

Fig. 30. "A" shows the connections of the field coils for a shunt generator. Note that they are connected in parallel with the brushes and the armature. "B" shows the connection of the field coils for a series machine. "C" illustrates the connection of the field coils for a compound generator. Note that the shunt coils next to the armature are connected in parallel with the brushes while the series coils on the outside are connected in series with the brushes.

Each of these machines has certain characteristics which are particularly desirable for certain classes of work, as will be explained in detail in the following paragraphs.

22. SHUNT GENERATORS

Fig. 31 is a simple sketch showing the method of connecting the field winding of a shunt generator in parallel with its armature. The field rheostat, F.R., is connected in series with the shunt field winding to regulate the field strength, as previously explained.

It is well to note at this point that, in various electrical diagrams, coils of windings are commonly represented by the turns or loops shown for the shunt field at "F", while resistance wires or coils are commonly shown by zigzag lines such as those used for the rheostat at "F.R."

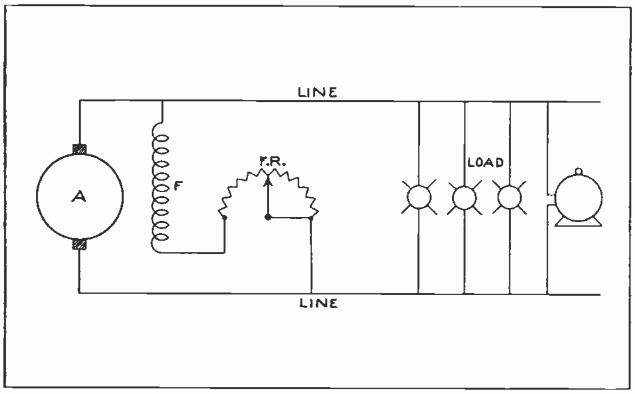

Fig. 31. This diagram shows the connections of a shunt generator. The shunt field winding "F" is connected in series with the field rheostat and then across the brushes. Note that this field winding is also in parallel with the load on the line.

Fig. 32 shows the connections of a shunt generator as they would appear on the machine itself. By comparing this diagram with the one in Fig. 31 and tracing the circuits of the field and armatures, you will find they are connected the same in each case.

The shunt generator, being a self-excited machine, will start to build up its voltage from residual magnetism as soon as the armature commences to rotate. Then, as the armature develops a small amount of voltage, this sends some current through the field, increasing the lines of force and building up the voltage to full value, as previously explained. However, if there is a heavy load connected to the line the shunt generator may refuse to build up its voltage, as the load devices offer a path of very low resistance in parallel with the field circuit, which is of high resistance.

We know that electric current always tends to flow through the easiest path; so, if the resistance of the line and load is too low, it will prevent the field winding from receiving enough current to build up voltage in the generator. It is, therefore, common practice to disconnect the load from a shunt generator when starting up, and until the machine has built up its full voltage.

23. VOLTAGE CHARACTERISTICS OF SHUNT GENERATORS

The voltage of the shunt generator will vary inversely with the load. This is partly due to I.R. loss in the armature and partly because an increase of load means a lower resistance of the line circuit. This tends to slightly reduce the shunt field current by providing an easier path in parallel with the field winding.

If the load on a shunt generator is suddenly increased, the voltage drop may be quite noticeable; while, if the load is almost entirely removed, the voltage may rise considerably. Thus we see that the voltage regulation of a shunt generator is very poor, because it doesn't inherently regulate or maintain its voltage at a constant value.

The voltage may be maintained fairly constant by adjusting the field rheostat, provided the load variations are not too frequent and too great.

Shunt generators are, therefore, not adapted to heavy power work but they may be used for incandescent lighting or other constant potential devices where the load variations are not too severe.

Shunt generators are difficult to operate in parallel because they don't divide the load equally between them. Due to these disadvantages shunt generators are very seldom installed in new plants nowadays, as compound generators are much more satisfactory for most purposes.

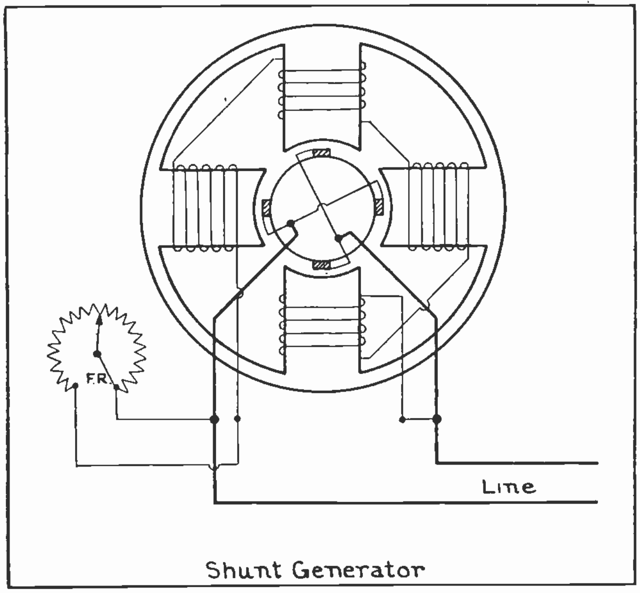

Fig. 32. This sketch shows the wiring and connections of the brushes and field coils for a four-pole, shunt generator.

Fig. 33 shows a voltage curve for a shunt generator and illustrates the manner in which the voltage of these machines varies inversely with the load. You will note that at no load the voltage of the generator is normal or maximum, while as the load in kilowatts increases the generator voltage gradually falls off to a lower and lower value.

24. SERIES GENERATORS

These machines have their field coils connected in series with the armature and the load, as shown in Fig. 34. The field winding is usually made of very heavy wire or strip copper, so that it will carry the full load current without overheating.

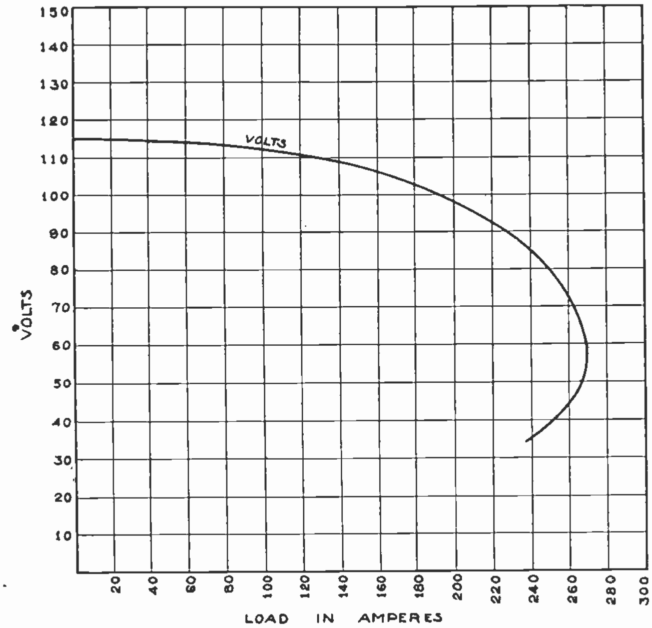

Fig. 33. This curve illustrates the voltage characteristic of a shunt generator. Note how the voltage drops as the load in kilowatts is increased. Full load in this case is 240 amperes.

By referring to Fig. 34 we can see that if there were no load connected to the line, it would be impossible for any current to flow through the series field and therefore the generator couldn't build up voltage. So, in order for a series generator to build up voltage when it is started, we must have some load connected to the line circuit.

25. VOLTAGE CHARACTERISTIC OF SERIES GENERATORS

The greater the load connected to such a generator, the heavier will be the current flowing through the field winding and the stronger the field flux. This causes the voltage of a series generator to vary directly with the load; or to increase as the load is increased and decrease as the load decreases. This, you will note, is exactly the opposite characteristic to that of a shunt generator.

As most electrical equipment is to be operated on constant voltage and is connected to the line in parallel, series generators are not used for ordinary power purposes or for incandescent lighting. Their principal use has been in connection with series arc lights for street lighting and a number of series generators are still used for this purpose.

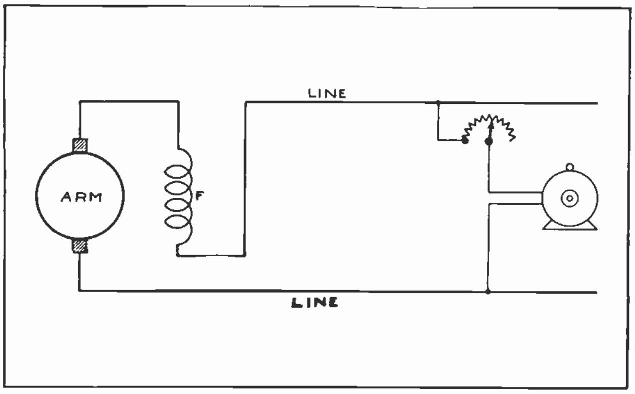

Fig. 34. This sketch shows the connections of a series generator. The series field at "F" is connected in series with the armature and the line. Note that no current could flow through this field if there was no load connected to the line.

With a load of this kind, the current must always remain at the same value for the series lamps and, therefore, the generator field and voltage will remain fairly constant. You can readily see that a series generator would be entirely impractical for ordinary power and light circuits, because, if the load is decreased by disconnecting some of the devices, the voltage on the rest will drop way below normal.

26. SERIES FIELD SHUNTS

Fig. 35 shows a curve illustrating the voltage regulation of a series generator. The voltage of such machines can be adjusted by the use of a low-resistance shunt connected in parallel with the series field coils, as shown in Fig. 36. This figure shows the connections of a series generator as they would appear on the machine. By tracing the circuit you will find that the field coils are connected in series with the armature and load.

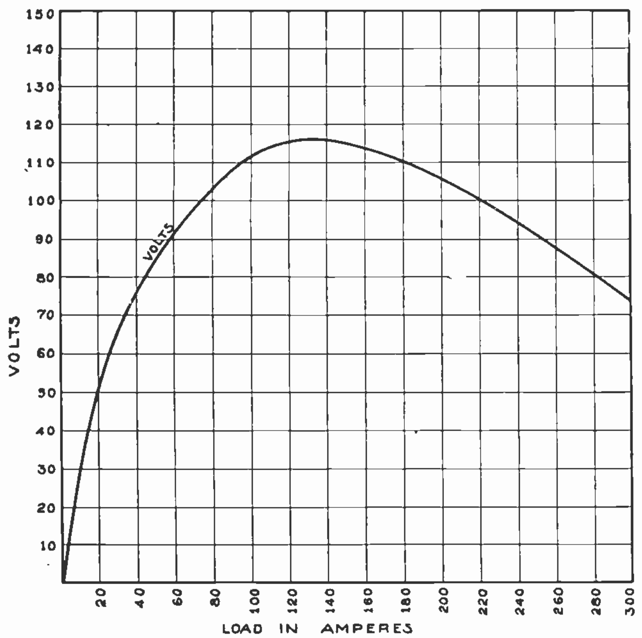

Fig. 35. This curve shows the voltage characteristic of a series generator. Note that the voltage increases rapidly as the load on the machine is increased up to about full load. Full load in this case is 125 amperes.

The purpose of the shunt is to divide the load current, allowing part of it to flow through the series field and the rest through the shunt. By varying the resistance of this shunt, we can cause more or less of the total load current to flow through it, thus either weakening or strengthening the series field.

These shunts are generally made of very low resistance material, such as copper ribbon or strips of metal alloy with higher resistance than copper, in order to make them short in length and compact in size.

By referring again to the curve in Fig. 35, you can see that the voltage regulation of a series generator is also very poor.

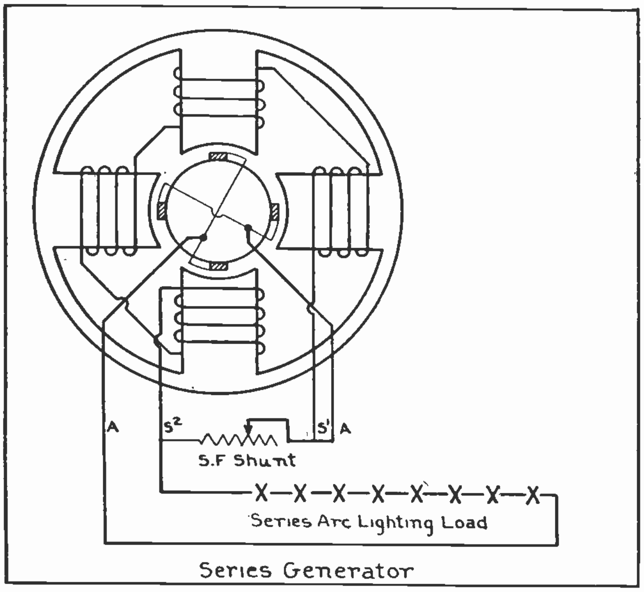

Fig. 36. Connections of brushes and field coils of a four-pole, series generator.

27. COMPOUND GENERATORS

The fields of a compound generator are composed of both shunt and series windings, the two separate coils being placed on each pole. Fig. 37 shows the connections of both the series and shunt fields of a compound generator.

The shunt field is connected in parallel with the armature and therefore it maintains a fairly constant strength. The series field, being in series with the armature and load, will have its strength varied as the load varies. These machines will therefore have some of the characteristics of both shunt and series generators.

We have found that the shunt generator tends to decrease its voltage as the load increases and that the series generator increases its voltage with increases of load. Therefore, by designing a compound generator with the proper proportions of shunt and series fields, we can build a machine that will maintain constant voltage with any reasonable variations in load.

The shunt field winding of a compound generator is usually the main winding and produces by far the greater portion of the field flux. The series field windings usually consist of just a few turns, or enough to strengthen the field to compensate for the voltage drop in the armature and brushes as the load increases.

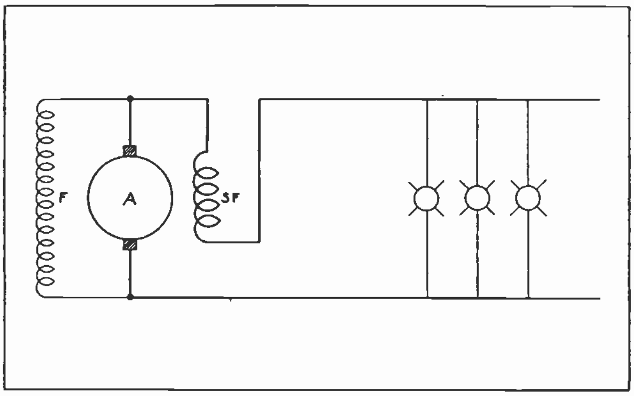

Fig. 37. This sketch shows the connections of a compound generator. The shunt field is connected across the brushes. The series field is connected in series with the line.

Compound generators can have the shunt field strength adjusted by a rheostat in series with the winding, and may also have a shunt in parallel with the series field for its adjustment. The shunt field rheostat on these machines, however, is not generally used for making frequent adjustments in their voltage, but is intended for establishing the proper adjustment between the series and shunt field strengths when the generators are placed in operation.

The variation in the strength of the series field, which compensates for the voltage drop with varying load, makes it unnecessary to use the field rheostat with these machines, as is done with shunt generators.

Fig. 38 shows the complete connections for the armature and fields of a compound generator. You will note that the series winding is composed of just a few turns of very heavy wire on each pole and is in series with the armature and line. The shunt winding is composed of a far greater number of turns of small wire and is connected in parallel with the armature brushes.

By referring back to Fig. 12, you will note the series coils wound on the poles over or outside of the shunt winding, which is wound next to the pole cores.

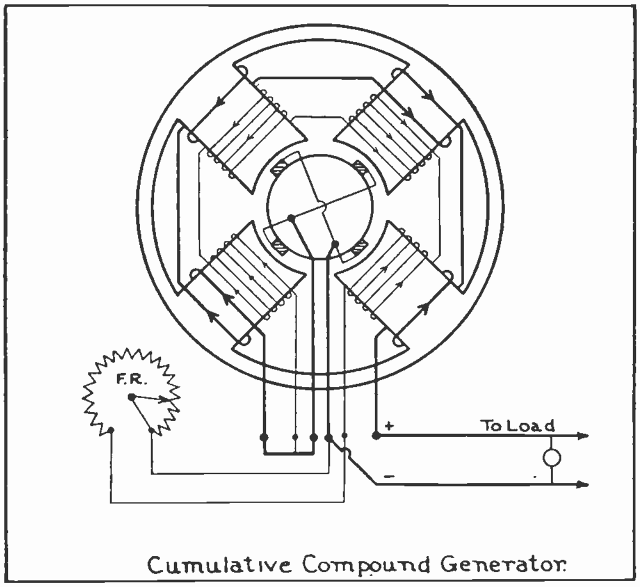

Fig. 38. Connections of brushes and field coils for a four-pole, cumulative compound generator. Note that the direction of current through the series field winding is the same as that through the shunt coils.

28. CUMULATIVE AND DIFFERENTIAL COMPOUND GENERATORS

In the type of compound generator which we have just described the series coils are wound in the same direction as the shunt coils, so their flux will aid and strengthen that of the shunt field. They are therefore known as **Cumulative Compound** machines. This name comes from the fact that the two windings both work together, or add their fluxes, to build up the total cumulative field.

Some compound generators have the series fields wound in the opposite direction, so that their flux opposes that of the shunt field. Such machines are known as **Differential Compound** generators. Their uses will be explained later.

29. FLAT COMPOUND GENERATORS. VOLTAGE CHARACTERISTICS

When a compound generator has just enough of series field to compensate for the voltage drop in its own armature and brushes, and to maintain a nearly constant voltage from no load to full load on the generator, it is known as a **Flat Compound** machine.

The voltage regulation of such a machine is very good, as it automatically maintains almost constant voltage with all normal load variations. Such machines are very commonly used for supplying current to general power and light circuits where the load is not located too far from the generator and the line drop is small. Fig. 39 shows the voltage curve of a flat compound generator at F.

30. OVER COMPOUND GENERATORS. VOLTAGE CHARACTERISTICS

Where the load is located some distance from the generator or power plant and the line drop is sufficient to cause considerable reduction of voltage at the current-consuming devices when the load is heavy, the generators are commonly equipped with series field windings large enough to compensate for this line drop as well as their own armature and brush voltage drop. Such machines are called **Over Compound** generators and are by far the most common type used in power work.

The voltage of an over compound generator will increase slightly at the generator terminals with every increase of load. These voltage increases are due to the greater number of turns in the series field winding. Every increase of load increases the current through these series turns, thereby strengthening the field enough to actually raise the voltage a little higher at full load than at no load.

This voltage increase at the generator terminals makes up for the additional voltage drop in the line when the load is increased. Therefore, if the series and shunt fields of such a machine are properly adjusted, it will maintain a very constant voltage on the equipment at the end of the line.

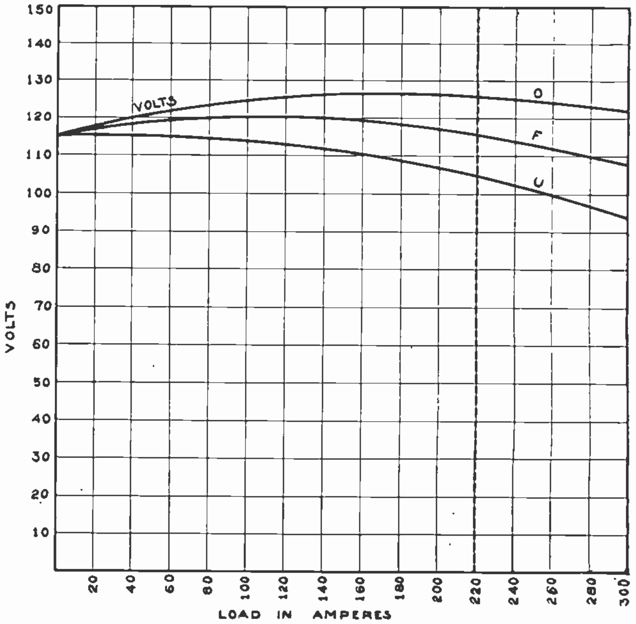

Fig. 39. These curves show the voltage characteristic of a flat compound generator at F, over compound at O, and under compound at U. Full load in this case is 220 amperes.

The adjustment of the shunt and series fields of these machines can be made with the usual shunt field rheostat and series field shunts.

The voltage regulation of an over compound generator is very good, and for ordinary power purposes they don't require frequent adjustment of the rheostat or any special voltage regulating equipment, because this regulation is inherent in the design and operation of the machine. Over compound generators are usually made and adjusted so that the terminal voltage will be from 4½% to 6% higher at full load than at no load.

31. DIFFERENTIAL COMPOUND GENERATORS

Any compound generator can be connected either cumulative or differential, by simply reversing the connections of the series field windings so that these coils will either aid or oppose the flux of the shunt field.

Compound generators are practically always connected cumulative when shipped by the manufacturers, unless otherwise ordered for special purposes.

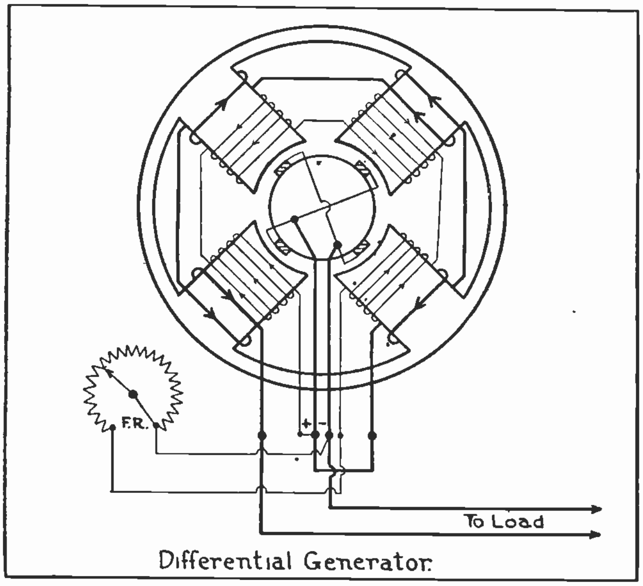

Fig. 40. Connections of brushes and field coils for a four-pole, differential, compound generator. Note that the direction of current through the series field coils is opposite to that in the shunt coils.

When the series field coils are connected differential, and so that their flux opposes that of the shunt field, each increase in the load on the machine will cause quite a decided voltage drop, as it increases the current in the differential winding and thereby weakens the field flux.

The voltage of these machines, therefore, will vary inversely with the load and considerably more than it varies with the shunt generator. The voltage regulation of differential compound generators may be classed as very poor, but they have advantages in certain classes of work.

For the generators used in welding, where sudden and severe overloads are placed on the machine in starting the arcs, or for any machines that have frequent severe overloads or the possibility of short circuits, the differential compound winding is a good protective feature.

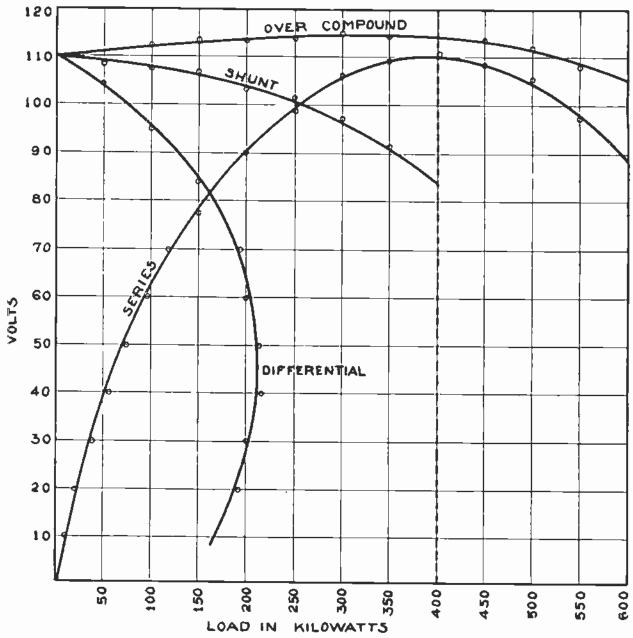

Fig. 41. This chart shows the curves of several types of generators all together so they can be easily compared.

When an overload is placed on the line, the additional current in the differential series coils tends to neutralize the shunt field flux and thereby reduces the generator voltage considerably. This also reduces the amount of current which will flow through the armature, and therefore protects it from overheating.

The shunt field winding of the differential generator is always the main field winding and will always determine the polarity of the pole. The series field will at no time determine the polarity of the poles, unless the shunt field circuit is open.

Fig. 40 shows the connections of a differential compound generator. Note that the current flows in opposite directions in the shunt and series windings around the field poles.

Fig. 41 shows the curves for the several types of generators just described and provides a good opportunity to compare the voltage characteristics of shunt, series, and compound generators. Note how rapidly the voltage of the differential machine falls off as the kilowatt load increases.

It will be well to keep in mind the different voltage characteristics of these machines and the principles by which their voltage regulation is obtained, because you will encounter all types in various plants in the field. Therefore a knowledge of their field connections and adjustment, and the proper methods by which these connections can be changed to obtain different characteristics, will often be very valuable to you.

OPERATION OF D. C. GENERATORS

In commencing the study of the operation of generators, it will be well to first consider prime movers, or the device, used to drive the generators.

The term **Prime Mover** may apply to any form of mechanical power device, such as a steam engine, steam turbine, gas or oil engine, or water wheel. These devices, when used to drive electric generators, are designed to operate at a constant speed at all loads up to full load. They are usually equipped with governors which maintain this constant speed by allowing the correct amount of power in the form of steam, gas, or water to enter the prime mover, according to the variations of current load on the generator.

The prime mover should always be large enough to drive the generator when it is fully loaded, without any reduction in speed which would be noticeable in the generator voltage output.

It is not our purpose in this Electrical Reference Set to discuss in detail the design or operation of prime movers, although in a later section they will be covered to a greater extent with regard to their operation.

32. CALCULATION OF PROPER H.P. FOR PRIME MOVERS

To determine the proper sized engine or prime mover to drive a D.C. generator of a given rating in kilowatts, we can easily calculate the horse power by multiplying the number of kilowatts by 1.34.

You will recall that one h. p. is equal to 746 watts, and one kilowatt, or one thousand watts, is equal to 1.34 h. p.

Multiplying the kilowatt rating of the generator by 1.34 gives the horse power output of the machine. This horse power output can also be determined by the formula:

$$\text{H. P.} = \frac{E \times I}{746}$$

In which:

E = the generator voltage
I = the maximum current load rating
746 = the number of watts in one h. p.

In addition to the electrical horse power output of the generator, we must also consider its efficiency, or the loss which takes place in its windings and bearings.

If the efficiency of a generator is known to be 80%, the formula to determine the horse power required to drive it will be as follows:

$$\text{H. P.} = \frac{E \times I}{e \times 746}$$

In which:

e = the efficiency of the generator, expressed decimally.

We should also allow a certain amount for any overload that the generator is expected to carry. A convenient rule for determining the approximate horse power required to drive any generator, is to multiply the kilowatt rating of the machine by 1.5, which will usually allow enough extra power to make up for the loss in the generator.

For example, if we have a generator which is rated at 250 volts and 400 amperes, and this machine has an efficiency of 90%, we can determine the necessary horse power by the formula, as follows:

$$\text{H. P.} = \frac{250 \times 400}{.90 \times 746}, \text{ or } 148.94 \text{ h. p.}$$

The kilowatt rating of this same generator would be 100 KW, as can be proven by multiplying the volts by the amperes. So, if we simply multiply 100 × 1.5, according to our approximate rule, we find that 150 h. p. will be required. This is approximately the same figure as obtained by the use of the other formula.

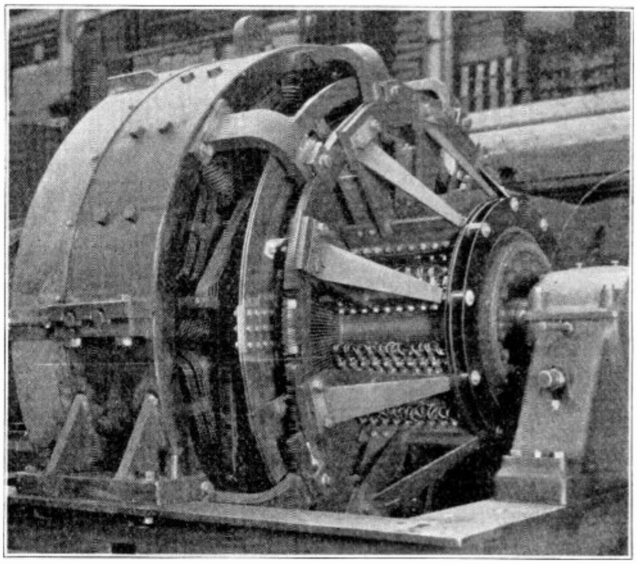

Fig. 41-A. This photo shows a large modern D. C. generator with a welded frame. The capacity of this generator is 1000 KW. What horse power will be required to drive it and satisfactorily maintain the speed when the generator is 10% overloaded? Assume the efficiency of the generator to be 93%.

If the generator has less than 90% efficiency and if it is known that the load will be up to the full capacity of the generator at pratically all times, and occasionally a little overload, then it is better to allow slightly greater horse power than in the problem just given.

Prime movers for the operation of generators should be equipped with governors which are quick enough in their response so that they do not allow the generator to slow up noticeably when additional load is applied.

There is generally some adjustment provided on these governors which can be used to set the prime mover to run the generator at the proper speed to maintain the proper voltage.

As the voltage of the generator depends upon its speed, we should keep in mind that its voltage can be adjusted by adjusting the governors or throttle of the prime mover.

33. INSPECTION BEFORE STARTING GENERATORS

When starting up a generator we should first make a thorough examination, to make sure that the prime mover and generator are both in proper running order. The oil wells should be examined to see that there is sufficient oil in all main bearings and that the oil rings are free to turn. Be careful, however, not to flood oil wells, because excess oil allowed to get into the windings of the generator is very damaging to the insulation, and may necessitate rewinding the machine.

On small and medium-sized machines only a little oil need be added from time to time, unless the oil wells leak. On large machines, where the armature is very heavy, forced lubrication is necessary to maintain the film of oil between the shaft and bearings. With these machines an oil pump is used to force oil to the bearings at a pressure of 20 to 30 lbs. per square inch to insure proper lubrication. Some bearings are also water cooled, having openings through the metal around the bearing for water to flow through and carry away excessive heat.

If there are auxiliaries of this kind, they should be carefully examined and checked before running the machine.

34. STARTING GENERATORS

Before starting up a generator it is usually best to see that the machine is entirely disconnected from the switchboard. This is not always necessary, but it is safest practice. Next start the prime mover and allow the generator armature to come gradually up to full speed. Never apply the power jerkily or irregularly.

Power generators are always rotated at their full speed when operating under load. When the machine is up to full speed the voltage can be adjusted by means of the field rheostat which is connected in series with the shunt field.

The machine voltage can be checked by means of the switchboard voltmeter, and it should be brought up to full operating voltage before any switches are closed to place load on the generator.

After the voltage is adjusted properly, the machine may be connected to the switchboard by means of the circuit breakers and switches. Where circuit breakers are used they should always be closed first, as they are overload devices and should be free to drop out in the event there is an overload or short circuit on the line.

After closing the circuit breaker the machine switch may be closed, completing the connection of the generator to the switchboard. As the switch is closed the operator should watch the ammeter and voltmeter to see that the load is normal and to make any further necessary adjustments with the field rheostat.

If the generator is operating in parallel with others, the ammeter will indicate whether or not it is carrying its proper share of the load. The load on any generator should be frequently checked by means of an ammeter or wattmeter to see that the machine is not overloaded.

The temperature of the machine windings and bearings should also be frequently observed in order to check any overheating before it becomes serious.

35. CARE OF GENERATORS DURING OPERATION

After the machine is running, the most important observations to be made frequently are to check the bearing oil and temperature, winding temperatures and ventilation, voltage of the machine as indicated by the volt meter, and the load in amperes shown by the ammeter. Commutator and brushes should also be observed to see that no unusual sparking or heating is occurring there.

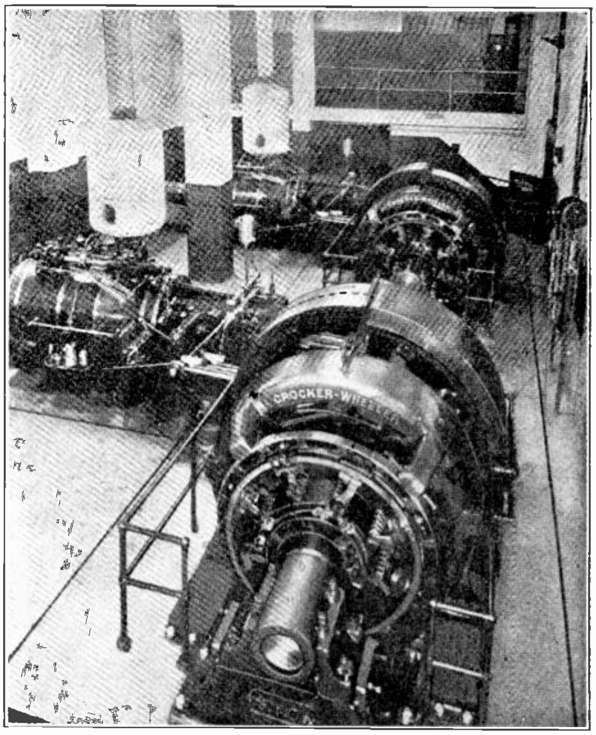

Fig. 41-B. This view shows two engine-driven D. C. generators in a power plant. Two or more machines of this type are commonly operated in parallel.

Commutators should be kept clean and free from dirt, oil, or grease at all times. Brushes should be kept properly fitted and renewed when necessary, and the commutator surface kept smooth and even for the best results.

All parts of an electric generator should be kept clean at all times as dust and oil tend to clog the ventilating spaces in the windings, destroying the value of the insulation, and also interfere with proper commutation.

The supply of ventilating air in the generator room should be frequently checked to see that it is not restricted, and that the temperature of the armature is not allowed to become too high. Moisture is very detrimental to the generator windings and water in or around the generator is very dangerous, unless confined in the proper pipes for such purposes as cooling bearings, etc. **Never use water to extinguish fire on any electrical equipment.**

36. PARALLELING D. C. GENERATORS

Where direct current is used in large quantities the power is usually furnished by several generators operating in parallel, rather than by one or two very large machines. The larger machines when operated at full load, are, of course, more efficient than smaller ones, but the use of several machines increases the flexibility and economy of operation in several ways.

If only one large generator is used and the load is small during a considerable part of the time, it is then necessary to operate the machine partly loaded. The efficiency of any generator is generally less when operating at less than full load, as they are designed to operate at highest efficiency when they are fully loaded or nearly so.

When several machines are used, the required number can be kept in operation to carry the existing load at any time. Then if the load is increased additional machines may be put in operation, or if it is decreased one or more machines may be shut down.

In a plant of this kind if any generator develops trouble it can be taken out of service for repairs, and its load carried by the remaining machines for a short period, if it doesn't overload them more than the amount for which they are designed.

37. IMPORTANT RULES FOR PARALLEL OPERATION

As we learned in the previous section on series and parallel circuits, when generators are connected in parallel their voltages will be the same as that of one machine. The current capacity of the number of generators in parallel, however, will be equal to the capacity of all of them, or the sum of their rated capacities in amperes.

To operate generators in parallel, **their voltages must be equal** and **their polarities must be alike.**

The positive leads of all machines must connect to the positive bus bar and the negative leads of all machines must connect to the negative bus bar. This is illustrated by the sketch in Fig. 42, which shows two D. C. generators arranged for parallel operation. You will note that if the switches are closed the positive brushes of both machines will connect to the positive bus bar, and the negative brushes are both connected to the negative bus bar.

The voltmeters connected to each machine can be used to check the voltage as the machine is brought up to speed, in order to be sure that it is equal to the voltage of the other machine which may already be running and connected to the bus. If the voltages are unequal to any great extent, the machine of higher voltage will force current backward through the one of lower voltage and tend to operate it as a motor.

It is, therefore, very important that the voltage be carefully checked before closing the switch which connects a generator in parallel with others.

If the polarity of one machine were reversed, then when they are connected together it would result in a dead short circuit with double voltage or the voltage of both machines applied in series.

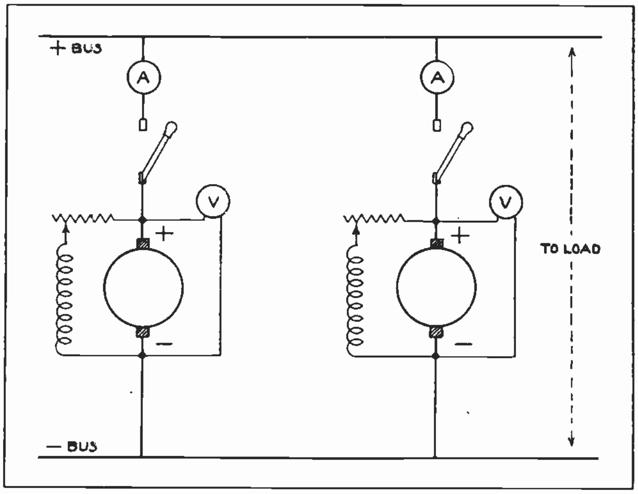

Fig. 42. This simple sketch shows a method of connecting two D. C. generators in parallel. Note the polarity of the generator brushes and bus bars.

Just try making a sketch similar to Fig. 42 and reverse the polarity of one generator and see what would happen. You will find that the positive of one machine feeds directly into the negative of the other, and so on around a complete short circuit.

The resistance of the machine windings, bus bars, ammeters and connections is so low that a terrific current would flow, until circuit breakers or fuses opened the circuit. If no such protective devices were provided, the windings would be burned out or possibly even thrown out of the slots, by the enormous magnetic stresses set up by the severe short circuit currents.

You can readily see that in such matters as these your training on electrical principles and circuits becomes of the greatest importance, as you should at all times know the results of your movements and operations in a power plant, and know the proper methods and precautions to follow.

38. CORRECTING WRONG POLARITY

If the polarity of a generator should build up wrong, or in the reverse direction, it will be indicated by the voltmeter reading in the wrong direction, and these meters should always be carefully observed when starting up machines.

Sometimes the generator will build up wrong polarity because its residual magnetism has reversed while the machine was shut down. Sometimes stopping and starting the machine again will bring it up in the right polarity. If it doesn't, the polarity can be corrected by momentarily applying a low voltage source of current to the field coils and sending current through them in the proper direction.

In power plants where several D. C. generators are used, they are generally arranged so their fields can be connected to the bus bars, assuring proper excitation and polarity.

39. COMPOUND MACHINES BEST FOR GENERAL SERVICE

Shunt wound generators will operate quite satisfactorily in parallel if their voltages are kept carefully adjusted to keep the load divided properly between them. If the voltage of one machine is allowed to rise or fall considerably above or below that of the others, it will cause the machine of lower voltage to motorize and draw excessive reverse current, and trip open the circuit breakers.

If the voltage of one machine falls only a little below that of the others, the back current may not be sufficient to open the breakers, but would be indicated by the ammeter of this machine reading in the reverse direction.

Shunt generators are not very often used in large power plants, because of their very poor voltage regulation and the considerable drop in their voltage when a heavy load is applied. A plain shunt generator can easily be changed for compound operation by simply adding a few turns of heavy wire around the field poles, and connecting them in series with the armature, with the right polarity to aid the shunt field flux.

The compound generator is best suited to most loads and circuits for power and lighting service and is the type generally used where machines are operated in parallel in D. C. power plants.

Series generators are not operated in parallel and in fact they are very little used, except for special test work or in older street lighting installations.

40. SIMILAR VOLTAGE CHARACTERISTICS NECESSARY FOR PARALLEL OPERATION

Compound generators can be readily paralleled if they are of the same design and voltage. They usually have similar electrical and voltage characteristics and should be made with the same compounding ratios. That is, the compounding effects of the machines must be equal if they are of equal size. If they are of unequal size, their compounding should be in proportion to their size.

Machines of different kilowatt ratings can be satisfactorily operated in parallel, if they are made by the same manufacturer or of the same general design, so that each will tend to carry its own share of the load. If their compounding is properly proportioned, the voltage rise of each generator should be the same for a similar increase of load.

When a D. C. generator is operated in parallel with others and its voltage is increased, it will immediately start to carry a greater share of the current load. We can, therefore, adjust the load on the various machines by increasing or decreasing their voltages the proper amount.

41. TESTING AND ADJUSTING COMPOUNDING OF GENERATORS

The compounding effects of different generators can be tested or compared by separately loading them different amounts and observing their voltmeters. This can be done by connecting one of the machines to the switchboard, or to a special loading rheostat, and operating the machine under normal voltage. Then apply a certain amount of load to it and observe the voltmeter closely, to note the amount of increase in the voltage due to the compounding effect.

It will probably be well to check the voltage increase as the load is changed from one-fourth to one-half, and then to three-fourths and full load values. By testing each generator in this manner we can determine which of them has the greatest overcompounding effect, or produces the highest increase in voltage for the various increases in load.

If this compounding is found to be different on the various machines, it can be adjusted by means of the series field shunt; which will allow more or less of the total load current to flow through the series winding of the compound field.

When a number of machines of similar design are thus properly adjusted they should operate satisfactorily in parallel under all normal load changes.

In case the machines do not properly divide their loads and one is found to be taking more than its share of any load increases, this can be corrected by very slightly increasing the resistance of its series field circuit by adding a few feet of cable in the series field connection.

The series field windings may be connected to either the positive or negative brush leads of the

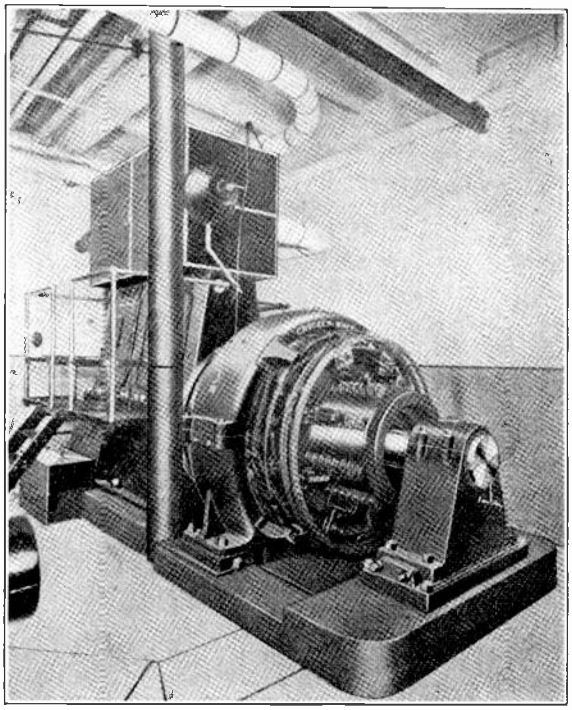

Fig. 42-A. Large D. C. generator driven by a vertical engine. If this machine is rated at 250 volts and 3000 amperes, what is its capacity and KW?

armature; but, where compound generators are operated in parallel, **the series field lead of each machine must be connected to the same armature lead, either positive or negative, on all generators.**

42. EQUALIZER CONNECTIONS

When compound generators are operated in parallel, an **equalizer connection** should be used to equalize the proportion of currents through their series fields and to balance their compounding effects.

This equalizer connection, or bus, is attached to the end of the series field next to the armature. Its purpose is to connect the series fields of all generators directly in parallel by a short path of very low resistance, and to allow the load to divide properly between them. When this connection is properly made the current load will divide between the series fields of the several machines in proportion to their capacity.

The equalizer allows the total load current to divide through all series fields in inverse proportion to their resistance, independently of the load on the armature of the machine and of the armature resistance and voltage drop. This causes an increase of voltage on one machine to build up the voltage of the others at the same time, so that no one machine can take all the increased load.

The connecting cables or busses used for equalizer connections between compound generators should be of very low resistance and also of equal resistance. This also applies to the positive and negative connections from the generators to the main busses, if best results are to be obtained.

If the machines are located at different distances from the switchboard, bus cables of slightly different size can be used, or an additional low resistance unit can be inserted in the lower resistance leads.

Whenever possible, leads of equal length should be used; and, in the case of cables, it is sometimes advisable to loop them or have several turns in the cable to make up the proper length. If these cables or busses were of unequal resistance, there would be an unequal division of the load through the machines, and the machine having the lowest resistance would take more than its share of the load.

Fig. 43 shows a wiring diagram for two compound generators to be operated in parallel. Note the series and shunt field windings, and also the series field shunts and shunt field rheostat. The equalizer connections are shown properly made at the point between the series field lead and the negative brush. From this point they are attached to the equalizer bus on the switchboard. The voltmeters are connected directly across the positive and negative leads of each generator, and the ammeters are connected across ammeter shunts which are in series with the positive leads of each machine. These shunts will be explained later.

The machine switches for connecting the generators to the bus bars are also shown in this diagram; but the circuit breakers, which would be connected in series with these switches, are not shown.

43. LOCATION OF EQUALIZER SWITCHES

On machines of small or medium sizes and up to about 1,000 ampere capacity, the equalizer switch is often the center pole of the three-pole switch, as shown in Fig. 43.

The two outside switch blades are in the positive and negative leads of the machine. For machines requiring larger switches, three separate single-pole switches may be used for greater ease of operation. In this case the center one is usually the equalizer switch.

It is quite common practice to mount all of these switches on the switchboard, although in some installations the equalizer switch is mounted on a pedestal near the generator. In this case, the equalizer is not taken to the switchboard but is run directly between the two machines.

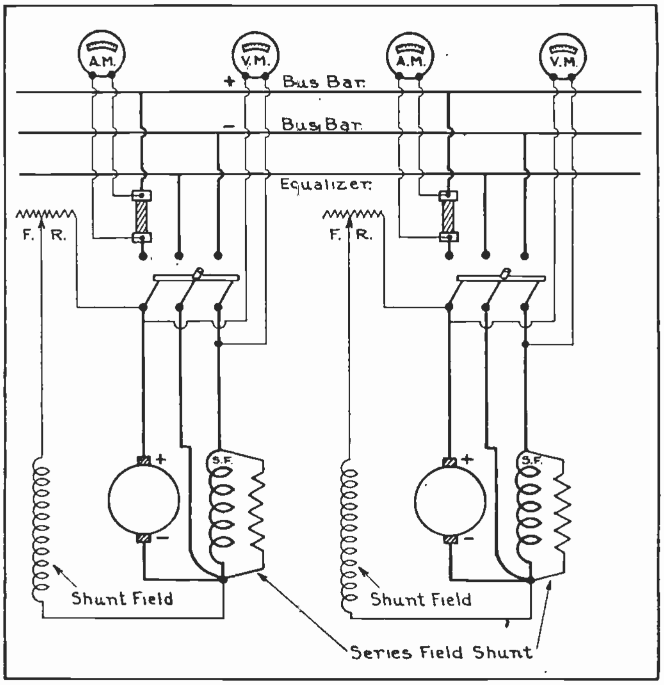

Fig. 43. This diagram shows the connections for two compound D. C. generators to be operated in parallel. Note carefully the connections of the equalizer leads, series and shunt fields and instruments.

Regardless of the location of the equalizer and switches, **they should be closed at the same time or before the positive and negative machine switches are closed.**

Where three-pole switches are used, **all** of the poles are, of course, closed at the same time; but, if three single-pole switches are used, the equalizer should be closed first. If the positive and negative switches are closed one at a time, the switch on the same side of the armature from which the equalizer connection is taken should be closed second.

The series field should **always** be **paralleled** before or at the same instant that the generator armature is paralleled with the main bus, in order to insure equalization of the compounding effects and to allow the machine to take its proper share of the load at once.

44. INSTRUMENT CONNECTIONS WITH PARALLEL GENERATORS

Current instruments and devices—such as ammeters, overload coils on circuit breakers, current coils of wattmeters, etc.—should always be connected in the armature lead which doesn't contain the series field winding. This is shown by the ammeter shunts in Fig. 43, which are properly connected in the positive lead.

If these devices are connected in the lead which has the series field in it, the current indications will not be accurate, because current from this side of the machine can divide and flow through either the equalizer bus or the armature.

Ammeters and other current devices should indicate the amount of current through the armature of the machine. It is not necessary to measure the current through the series fields, since they are all in parallel with each other.

The voltage generated in the armature will determine the amount of current which is carried through it, and it is possible to control the armature voltage of any machine by the adjustment of the shunt field rheostat and thus vary the load carried by each generator.

Voltmeters should be connected, as shown in Fig. 43, at a point between the generator brushes and the main switch, so that the voltage readings can be obtained before this switch is closed. This is necessary because we must know the voltage of the generator before it is connected in parallel with the others.

45. STARTING, PARALLELING and ADJUSTING LOAD ON GENERATORS

In starting up a generator plant with several machines, the first generator can be started by the procedure previously described and connected to the bus as soon as its voltage is normal. The second generator should then be brought up to speed and its voltage then carefully checked and adjusted to be equal to that of the first machine. Then this second machine can be connected to the bus. The ammeters of both machines should then be read to see that they are dividing the load equally or in proportion to their sizes.

By adjusting the voltage of any generator with its field rheostat, it can be made to take its proper share of the load. After this adjustment is made, the same procedure can be followed on the remaining machines. If there are a number of branch circuits and switchboard panels feeding to the lines and load, the switches on these panels can be closed one at a time, applying the loads to the generators gradually.

To shut down any machine, adjust its shunt field rheostat to cut in resistance and weaken its field, lowering the voltage of that generator until its ammeter shows that it has dropped practically all of its load. The circuit breaker can then be opened and the machine shut down.

THREE-WIRE D. C. SYSTEMS

The Edison three-wire D. C. system is used chiefly where the generating equipment is to supply energy for both power and lighting. The advantages of this system are that it supplies 110 volts for lights and 220 volts for motors and also saves considerably in the amounts and cost of copper, by the use of the higher voltage and balancing of the lighting circuits.

One of the most simple and common methods of obtaining the two voltages on three-wire circuits is by connecting two 110-volt generators in series, as shown in Fig. 44.

We know that when generators are connected in series in this manner their voltages add together, so these two 110-volt machines will produce 220 volts between the outside or positive and negative wires. The third, or neutral, wire is connected to the point between the two generators where the positive of one and negative of the other are connected together. The voltage between the neutral wire and either outside wire will be 110 volts, or the voltage of one machine.

Generators for this purpose may be either shunt or compound, but the compound machines are more generally used. They can be driven by separate prime movers or both driven by the same prime mover if desired; and the drive may be either by belt or direct coupling.

In general the operation of a three-wire system is practically the same as for a two-wire machine. The voltage of each generator may be adjusted by means of the shunt field rheostat.

As these machines are operated in series instead of parallel, it is not necessary to have their voltage exactly even; but they should be kept properly adjusted in order to maintain balanced voltages on the two sides of the three-wire system.

There is no division of the current load between these generators—as in the case of parallel machines—as the main current flows through both machine in series. When the voltage of both machines is properly adjusted, they can be connected to the switchboard busses. The ammeters should then be observed to note the current in each wire.

46. DIRECTION AND AMOUNT OF CURRENT IN THE NEUTRAL WIRE

The ammeter in the neutral wire is of the double-reading type, with the zero mark in the center of the scale, and it will read the amount of current flowing in either direction.

When the load on a three-wire system is perfectly balanced, the neutral wire will carry no current and the set operates on 220 volts. In this case the two outside ammeters will read the same and the center ammeter will read zero. When there is an unequal amount of load in watts on each side of the system it is said to be unbalanced, and the neutral wire will carry current equal to the difference between the current required by the load on one side and that on the other.

This current may, therefore, flow in either direction, according to which side of the system has the heaviest load. Referring to Fig. 44—if the greater load were on the lower side, the extra current required would be furnished by the lower generator; and the current in the neutral wire would be flowing to the right, or away from the generators. If the heavier load were placed on the upper side of the system, the extra current would be supplied by the upper machine, flowing out on its positive wire and back to the line on the neutral wire.

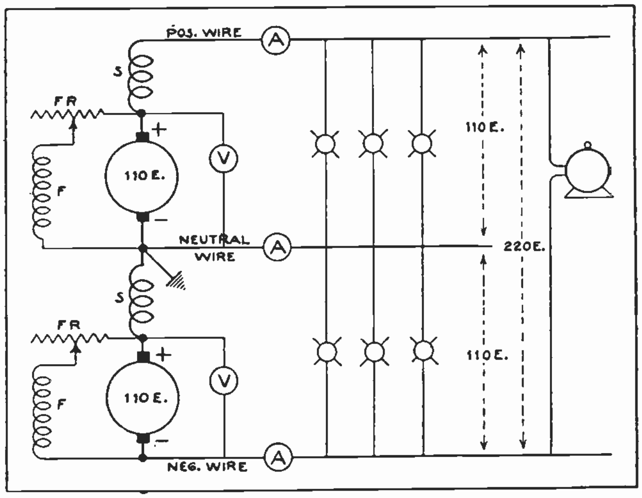

Fig. 44. This sketch shows two D. C. generators connected in series for providing three-wire, 110 and 220 volt service.

47. BALANCED SYSTEM MORE ECONOMICAL

For efficient operation, the amount of unbalance should not exceed 10% of the total load. In many cases, however, it is allowed to exceed 15% or more. If the load could always be kept perfectly balanced, no neutral wire would be required as all of the load devices would be operated two in series on 220 volts.

Without the neutral wire, if one or more of the lamps or devices should be disconnected, the remaining ones on the other side of the system would operate at more than normal voltage. This was thoroughly explained under the heading, "Three-Wire Systems", in Section Two of Electrical Construction and Wiring.

In most systems it is practically impossible to keep the load balanced at all times, and, therefore, the neutral wire is necessary to carry the unbalanced load and keep the voltages equal on both sides of the system. It is very seldom, however, that the neutral wire will have to carry as much current as the outside wires. Therefore, it may be made smaller than the positive and negative wires.

Quite often the neutral wire is made one-half the size of either of the outer wires, unless local rulings require it to be of the same size. If the neutral wire is made one-half the size of the outer ones, a three-wire system of this type will require only 31.3% of the copper required for the same load on a two-wire, 110-volt system.

The neutral wire is generally grounded, as shown in Fig. 44.

48. THREE-WIRE GENERATORS

In some cases a special three-wire generator is used, instead of the two machines in series, to produce a three-wire D. C. system. An early type of three-wire generator, and one which is still used for certain installations, consists of a 220-volt armature equipped with both a commutator and slip rings.

The armature coil connections are made to the commutator in the usual manner, and 220 volts is obtained from the brushes on the commutator. In addition to the leads from each coil to the commutator bars, other leads are taken from points spaced 180° apart around the winding and are connected to a pair of slip rings mounted on the shaft near the end of the commutator. This supplies single-phase alternating current at 220 volts to the slip rings.

From the brushes on these slip rings two leads are taken to opposite ends of a choke coil, which consists of a number of turns of heavy wire wound on an iron core similar to a transformer core. This connection is shown in Fig. 45.

A tap is made at the exact center of this choke coil for the third or neutral wire. In some cases a choke coil is mounted on the armature shaft and rotated with it; but in most cases this coil is stationary and outside of the machine, having its connections made through the slip rings and brushes. These coils are often referred to as three-wire transformers or compensators.

49. PRINCIPLE OF THE BALANCE COIL

The neutral wire, being connected to the center of the coil, is always at a voltage about one-half that between the positive and negative brushes. Therefore, if 220 volts are obtained between these brushes, 110 volts are obtained between either the positive and negative wire and the neutral.

When the load on a three-wire generator of this type is perfectly balanced, no current flows in the neutral wire and all of the load current is supplied from the commutator by the positive and negative D. C. brushes. There is, however, a small amount of alternating current flowing through the **choke or balance** coil at all times, as there is an alternating voltage applied to it from the slip rings as long as the machine is operating. This current will be very small, as a choke coil of this type offers a very high impedance or opposition to the flow of alternating current.

This impedance, or opposition, is composed of the ohmic resistance of the conductors in the coil, and also of the counter-voltage generated by self-induction whenever alternating current is passed through such turns of wire wound on an iron core.

Direct current, however, can flow through a coil of this type with only the opposition of the copper resistance, as the flux of direct current is not constantly expanding and contracting like that of alternating current, and so doesn't induce the high counter-voltage of self-induction.

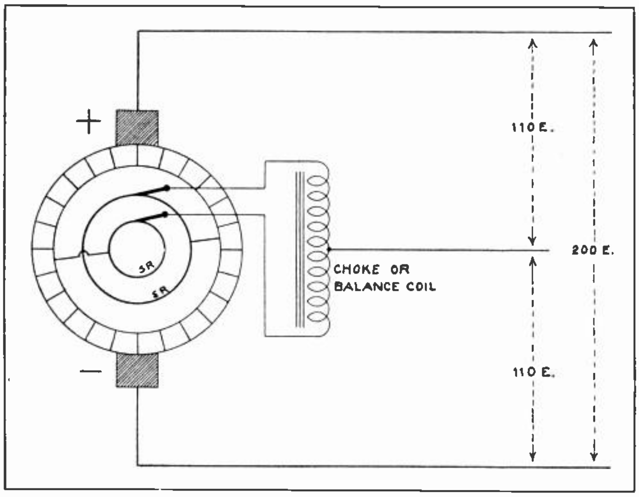

Fig. 45. The above diagram shows the commutator, slip rings, and balance coil of a three-wire D. C. generator.

50. UNBALANCED LOAD ON THREE-WIRE GENERATORS

When a system such as that shown in Fig. 45 is unbalanced and has, we will say, a heavier load between the positive wire and neutral, the unbalanced current flowing in the neutral wire will return to the center tap of the choke coil. From this point it will flow first in one direction and then in the other, as the alternating current reverses in direction through the coil. Thus it returns to the armature winding, through first one slip ring and then the other.

If the lower side of the circuit is loaded the heaviest the unbalanced current will flow out through the choke coil in the same manner, passing first through one half and then the other, to reach the neutral wire.

The choke coil must, of course, be wound with wire large enough to carry the maximum unbalanced current that the neutral wire is expected to carry. It must also have a sufficient number of turns to limit the flow of alternating current from the slip rings to a very low value, in order to prevent a large waste of current through this coil.

Three-wire generators of this type can stand considerable unbalanced load without much effect on the voltage regulation. They are very compact and economical and are used to some extent in small isolated D. C. plants, where the circuits carry a load of 110-volt lamps and equipment, and also 220-volt motors.

Fig. 46 shows a three-wire generator on which the slip rings can be seen mounted close to the end of the commutator.

51. THREE-WIRE MOTOR GENERATORS OR BALANCER SETS

Three-wire circuits may also be obtained by means of a 220-volt D. C. generator in combination with a motor-generator or balancer set. These balancer sets consist of two 110-volt machines mounted on the same bed plate and directly connected together by their shafts. The armatures of both machines are connected in series with each other, and across the positive and negative leads of the 220-volt generator, as shown in Fig. 47.

This allows 110 volts to be applied to each armature and operates both machines as motors when the load is perfectly balanced. Either machine can, however, be operated either as a motor or as a generator, if the load on the system becomes unbalanced.

If one side of the system has a heavier load connected to it, the machine on this side automatically starts to operate as a generator and is driven by the machine on the other side, which then operates as a motor. This condition will immediately reverse if the greater load is placed on the opposite side of the system. A balancer set of this type will, therefore, supply the unbalanced current in either direction, and will maintain 110 volts between the neutral and either outside wire.

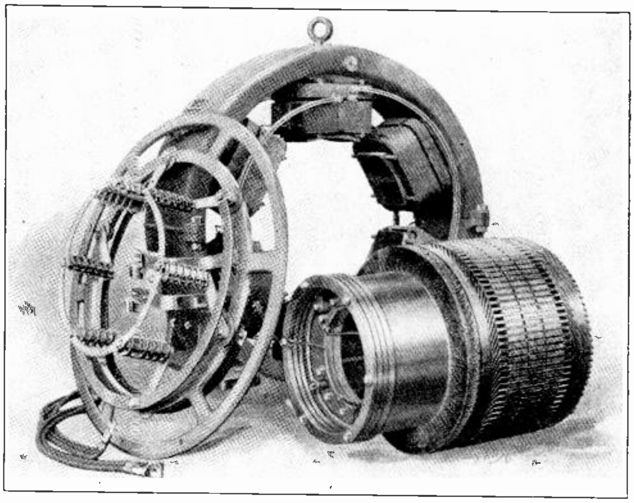

Fig. 45-B. This view shows a three-wire generator disassembled. You will note the slip rings mounted on the end of the commutator.

Where these machines are larger than one or two kilowatts, a starting rheostat should be used to limit the flow of current through their armatures until the machines attain full speed. After they reach full speed, they generate sufficient counter-voltage to limit the current flow through their armatures while operating as motors.

The neutral wire is connected between the armatures of the motor generator set where their positive and negative leads connect together.

52. EFFECTS OF SHUNT AND SERIES FIELDS OF BALANCER GENERATORS

Either shunt or compound machines may be used for these equalizers, but compound machines are used more extensively. The number of turns in the

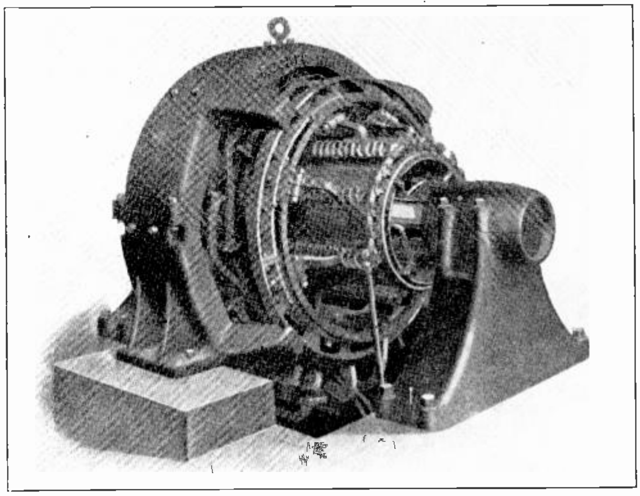

Fig. 46. Assembled three-wire generator. Slip rings can be seen at the right-hand end of the commutator. If this machine is rated at 500 KW, what should the maximum load in amperes be on both of the 110 volt circuits it supplies?

series field coils must be carefully selected to provide the proper compounding effects. Generally the number of turns is very small, so that the voltage rise due to compounding will not be very great.

If this series field produces too great a voltage rise on either machine, that machine will be apt to take more than the unbalanced part of the load. The machines shown in Fig. 47 are of the compound type and have their series fields connected in series with the armatures and the positive and negative line wires.

The shunt fields are connected in parallel with their armatures and are both in series with a field rheostat, which can be used to increase the strength of the field of one machine and decrease that of the other at the same time.

The series fields are connected so that they increase the strength of the shunt field when either machine is operating as a generator, but tend to decrease or oppose the flux of the shunt field on either machine when it operates as a motor. This is caused by the reversal of the direction of current through the series field and armatures as the unbalanced load is shifted from one side of the system to the other. Current through the shunt fields, however, continues to flow in the same direction at all times, because they are connected across the positive and negative leads from the main generator.

If the compounding effect of the balancer machines tends to strengthen the field of either one operating as a generator, the voltage of that machine will rise slightly; while the compound effect on the machine operating as a motor weakens its field and tends to make it speed up.

As long as the load on the system is perfectly balanced, both machines operate as differential motors without any mechanical load. The current through their armatures at such times is very small, being only sufficient to keep the armatures turning against the bearing and friction losses and to supply the small electric losses in the machines.

53. BALANCING OF UNEQUAL LOADS

When a system is unbalanced, the neutral current divides between the two armatures, driving the one on the lightly loaded side as a motor and passing through the other as a generator. In Fig. 47 the upper side of the system has the heaviest load, and the lower side has the highest resistance. This will cause the excess current from the greater load to flow back through the neutral wire and through the series of the lower machine, in a direction opposing its shunt field. This weakens the field flux and causes this machine to speed up and tend to act as a motor to drive the upper machine as a generator.

As the voltage of the generator unit rises slightly with the increased speed, it causes part of the unbalanced load to flow through it, and its series field, in a direction aiding the flux of the shunt field.

This increases its voltage still more, which enables it to take its proper share of the unbalanced current and to compensate for the voltage drop on the heavily loaded side of the system.

If the heaviest load is placed on the other side of the system, the current through the series fields of both machines will reverse, and cause the one which was operating as a generator to speed up and operate as a motor.

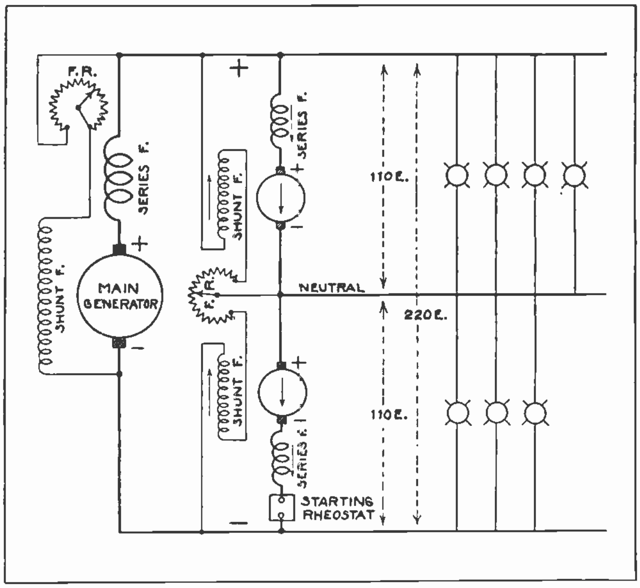

Fig. 47. This diagram shows the connections for the main generator and two balancer machines of a three-wire system.

The motor armature must take enough more than one-half of the neutral current to supply the losses of both armatures.

Referring again to Fig. 47, we find that the connections of the field rheostat, F. R., are such that when the handle or sliding contact is moved upward it will cut resistance out of the shunt field of the upper machine and add resistance in series with the shunt of the lower machine. This would produce the desired effects when the upper machine is operating as a generator and the lower one as a motor.

As this change of resistance increases the field strength voltage of the generator, it weakens the field-strength and increases the speed of the motor.

The shunt fields can be controlled separately, if desired, by connecting a separate rheostat in series with each field. In Fig. 44 the shunt fields of each machine are connected in parallel with their own armatures. By changing these connections so that the shunt field of each machine is connected across the armature of the other mahine, the machine which is operating as a generator will increase the current flow through the motor field and improve the torque of the motor armature.

Fig. 48 shows a motor-generator balancer set of the type just described.

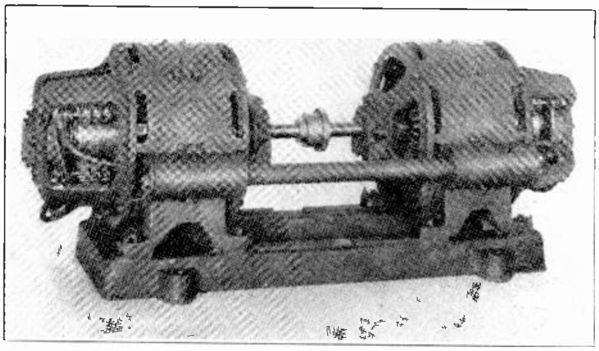

Fig. 48. Photo of a motor-generator balancer set used for three-wire system machines of this type are used considerably, where the unbalanced load is small compared to the total load on the main generator.

COMMUTATION AND INTERPOLES

The term "commutation" applies to the process of reversing the connections of the coils to the brushes, as the coils pass from one pole to another in rotation.

The function of the commutator, as we already know, is to constantly deliver to the brushes voltage in one direction only, and thereby rectify or change the alternating current generated in the winding to direct current for the line.

We have also learned that commutation for the various coils, or the contact of their bars with the brushes, should take place when the coils are in the neutral plane between adjacent poles; at which point there is practically no voltage generated in them.

The reason for having commutation take place while the coils are in the neutral plane is to prevent short-circuiting them while they have a high voltage generated in them. This would cause severe sparking, as will be more fully explained later.

54. PROCESS OF COMMUTATION

The process of commutation, or shifting of coils in and out of contact with the brushes, is illustrated in Fig. 49. Here we have a sketch of a simple ring-type armature with the ends of the coils shown connected to adjacent commutator bars. This winding is not the kind used on modern power generators, but it illustrates the principles of commutation very well, and is very easily traced.

We will assume that the armature in this figure is rotating clockwise. All of the coils which are in front of the north and south poles will be generating voltage, which we will assume is in the direction shown by the arrows inside the coils.

As the coils are all connected in series through their connections to the commutator bars, the voltage of all of the coils on each side of the armature will add together. The voltages from both halves of the winding cause current to flow to the positive brush, out through the line and load, and back in at the negative brush where it again divides through both sides of the winding.

Now let us follow the movement of one coil through positions A, B, and C; and see what action takes place in the coil during commutation.

We will first consider the coil in position A, which is approaching the positive brush. This coil is carrying the full current of the left half of the winding, as this current is still flowing through it to commutator bar 1 and to the positive brush. The coil at "A" also has a voltage generated in it, because it is still under the edge of the north field-pole.

An instant later when the coil has moved into position B, it will be short-circuited by the brush coming in contact with bars 1 and 2.

55. SELF INDUCTION IN COILS SHORTED BY BRUSHES

As soon as this coil is shorted by the brush, the armature current stops flowing through it, and flows directly through the commutator bar to the brush. When this current stops flowing through the coil, the flux around the coil collapses and cuts across the turns of its winding, inducing a voltage in this shorted coil. This is called **voltage of self-induction,** and it sets up a considerable current flow in the shorted coil, as its resistance is so low. Note that **the voltage of self-induction always tends to maintain current in an armature coil in the direction it was last flowing when generated from the field pole.**

As long as the coil remains shorted, the current set up by self-induction flows around through the coil, bars, and brush. But as the coil moves far enough so bar 2 breaks contact with the brush, this interrupts the self-induced current and causes an arc. Arcing or sparking will tend to burn and pit the commutator, and is very detrimental to the commutator surface and brushes. Methods of preventing arcing will be explained later.

As the coil which we are considering moves on into position C, its short circuit has been removed and it is now cutting flux under a north pole. This will generate a voltage in the opposite direction to what it formerly had, and it still feeds its current back to the positive brush through bar 2.

So we find that, by shifting the contact from one end of the coils to the other as they pass from pole to pole and have their voltages reversed, the same brush always remains positive.

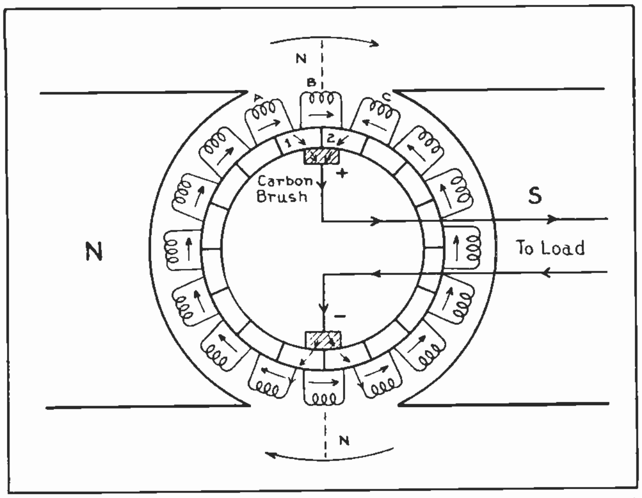

Fig. 49. This diagram illustrates the principles of commutation in a generator. Examine each part of it very carefully while reading the explanation given on these pages.

56. IMPORTANCE OF PROPER BRUSH SETTING FOR NEUTRAL PLANE

The time allowed for commutation is extremely short, because when a motor armature is turning at high speed, the bars attached to any coil are in contact with a brush for only a very small fraction of a second.

The reversal of the coil leads to the brushes must take place very rapidly as the coils are revolved at high speed from one pole to the next. On an ordinary four-pole generator each coil must pass through the process of commutation several thousand times per minute. Therefore, it is very important that commutation be accomplished without sparking, if we are to preserve a smooth surface on the commutator and prevent rapid wear of the brushes.

Brushes are made in different widths according to the type of winding used in the machine; but, regardless of how narrow the brushes may be, there will always be a short period during which adjacent commutator bars will be shorted together by the brushes as they pass under them.

We have found that, in order to avoid severe sparking during commutation, the coils must be shorted only while they are in the neutral plane, when the coil itself is not generating voltage from the flux of the field poles. Therefore, the brushes must be accurately set so they will short circuit the coils only while they are in this neutral plane.

57. SHIFTING BRUSHES WITH VARYING LOAD ON MACHINES WITHOUT INTERPOLES

The neutral plane tends to shift as the load on a generator is increased or decreased. This is due to the fact that increased load increases the current through the armature winding and the additional armature flux will cause greater distortion of the field flux. The greater the load, the further the neutral plane will move in the direction of armature rotation.

If the brushes are shifted to follow the movement of this neutral plane with increased load, commutation can still be accomplished without severe sparking. For this reason, the brushes are usually mounted on a rocker arm which allows them to be shifted or rotated a short distance in either direction around the commutator.

In addition to the sparking which is caused by shorting coils which are not in the neutral plane, the other principal cause of sparking is the self-induced current which is set up in the coils by the collapse of their own flux when the armature current through them is interrupted.

We have previously stated that this self-induction will set up a considerable flow of current in the shorted coils. Then, when the coil moves on and one of its bars moves out from under the brush and thus opens the short circuit, this current forms an arc as it is interrupted.

Sparking from this cause can be prevented to a large extent by generating in the coil a voltage which is equal and opposite to that of self-induction.

Shifting the brushes also helps to accomplish this, by allowing commutation to take place as the coil is actually approaching the next field pole.

This is illustrated in Fig. 50. In this figure you will note that the brushes have been shifted so that they do not short circuit the coils until they are actually entering the flux of the next pole beyond the normal neutral plane.

The voltage of self-induction always tends to set up current in the same direction as the current induced by the field pole which the coil is just leaving. If, at the time the short circuit on the coil is broken, the coil is entering the flux of the next pole, this flux will induce in the coil a voltage in the opposite direction to that of self-induction. This will tend to neutralize the voltage and currents of self-induction and enanble the short circuit to be broken when there is practically no voltage or current in the shorted coil.

Keep in mind that this is the required condition for most satisfactory commutation.

If the load on generators doesn't change often

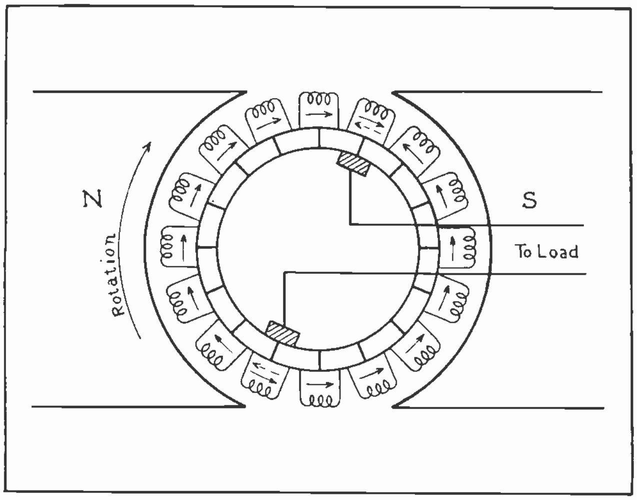

Fig. 50. This sketch shows the method of shifting the brushes to short circuit coils in a position where they will be generating the voltage to neutralize that of self-induction.

or suddenly, manual shifting of the brushes with each change of load and new position of the neutral plane, may be all that is required to prevent sparking; but when the load changes are frequent and considerable, it would be very difficult to maintain this adjustment by hand.

Where the manual method is used to maintain proper commutation, it is common practice to adjust the brushes to a position where they will spark the least for the average load. Then, even though a certain amount of sparking results when the load rises above or falls below this value, the brushes are not changed unless the sparking becomes too severe.

Fig. 51 shows a D. C. generator without the shaft or bearing post. The brushes of this machine are all attached to the ring framework as shown, and this entire assembly can be rotated to shift the brushes, by means of the hand wheel at the left.

Referring again to Fig. 50, the solid arrows show the direction of the voltage of self-induction, and the dotted arrows show the direction of the voltage which is induced by the flux of the field pole which the coil is approaching. These two voltages, being in opposite directions, tend to neutralize each other, as has previously been explained.

58. USE OF COMMUTATING POLES TO PREVENT SPARKING

On the more modern D.C. machines **commutating poles,** or **interpoles,** are employed to hold the neutral plane in its normal position between the main poles, and to neutralize the effects of self-induction in the shorted coils. These interpoles are smaller field poles which are mounted in between the main poles of the machine, as shown in Fig. 52.

The interpoles are wound and connected so they will set up flux in a direction which will generate voltage in the opposite direction to that of self-induction, as the armature coils pass under them. Fig. 53 shows a sketch of a simple generator with interpoles, or commutating poles, placed between the main field poles.

We will assume that this armature is rotated in a clockwise direction, and that its armature conductors have generated in them voltage which tends to send current in through the conductors on the left side, and out through those on the right side of the winding. Recalling that the voltage of self-induction tends to maintain current in the same direction in the conductor as it was under the last field pole, we find that this voltage is generated "in" at the top conductor in the neutral plane and "out" at the lower one.

59. POLARITY OF INTERPOLES FOR A GENERATOR

If you will check the polarity of the interpoles, you will find that their flux would be in a direction to induce voltages opposite to those of self-induction in each of these two conductors. The direction of these voltages is shown by the symbols placed just outside of the conductor circles. So we find that, if these commutating poles are made to set up flux of the right polarity and in the right amount, they can be caused to neutralize the effects of self-induction and distortion of the neutral plane almost entirely.

These poles are called "commutating poles" because their principal purpose is to improve commutation and reduce sparking at the commutator and brushes.

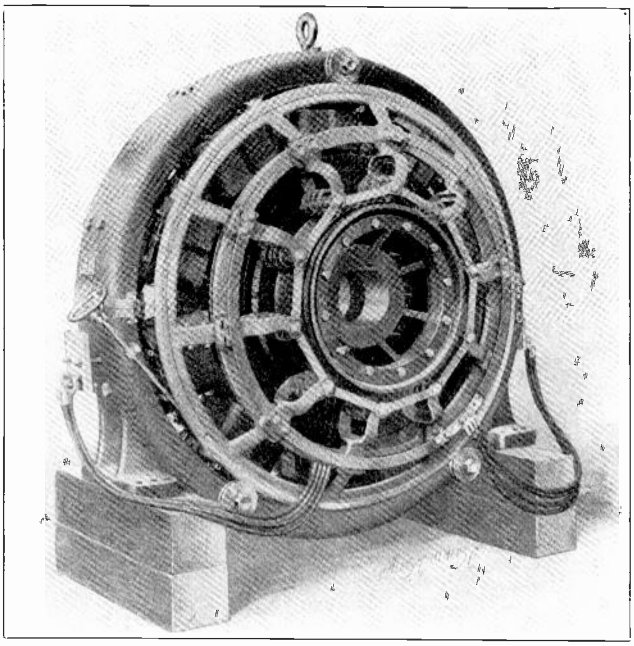

Fig. 51. This end view of a generator with the pedestals, bearing, and shaft removed shows very clearly the brush ring mounted in grooved rollers on the side of the field frame. The hand-wheel at the left can be used for rotating this ring to shift the brushes to the proper neutral plane.

In order to produce the desired results **the interpoles of a generator must be of the same polarity as the adjacent main pole in the direction of rotation.**

60. STRENGTH OF COMMUTATING FIELD VARIES WITH LOAD

In order that these commutating poles may produce fields of the proper strength for the varying loads on the generator armature, their windings are connected in series with the armature, so that their strength will be proportional at all times to the load current. In this manner, the strength and neutralizing effect of the interpoles increases as the load increases, and thereby tends to counteract the effect of increased load on field distortion and self-induction.

In this manner, interpoles can be made to maintain sparkless commutation at all loads and thus make unnecessary the shifting of the brushes for varying loads.

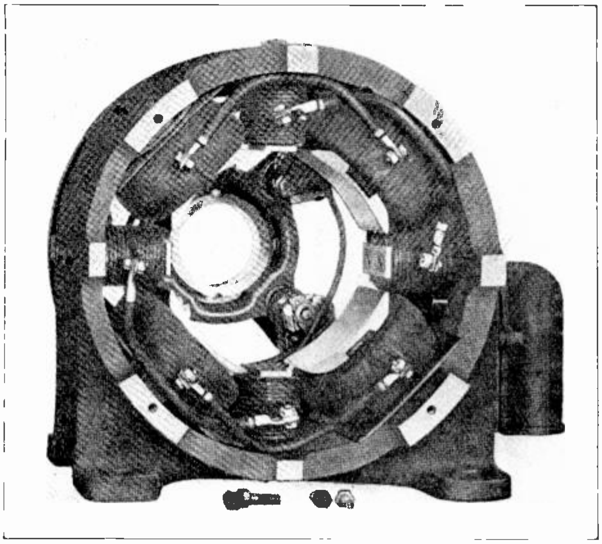

Fig. 52. This photo shows a four-pole, D. C. generator with commutating poles. These commutating poles or interpoles are the smaller ones shown between the main field poles.

Referring again to Fig. 52, you will note that the windings on the interpoles consist of a few turns of very heavy cable, so that they will be able to carry the armature current of the machine. The strength of the interpoles can be varied by the use of an **interpole shunt,** which is connected in parallel with the commutating field to shunt part of the armature current around these coils. The connections of this shunt are shown in Fig. 54-A. The interpole shunt is usually made of low resistance materials, such as bronze or copper, so it will carry the current readily without undue heating.

This method of weakening the strength of the commutating field is quite commonly used on the larger machines. The terminals of the commutating field are usually connected directly to the brushes, to eliminate confusion when making external connections to the machine.

61. ADJUSTMENT OF BRUSHES ON INTERPOLE MACHINES

On machines of small and medium sizes, the end plate or bracket on the generator is sometimes solid, as shown in Fig. 54-B, to allow the brushes to be rotated or shifted within a very limited range. With such machines, the brush-holder studs are mounted rigidly in the bracket but are, of course, insulated from the metal with fibre sleeves and washers.

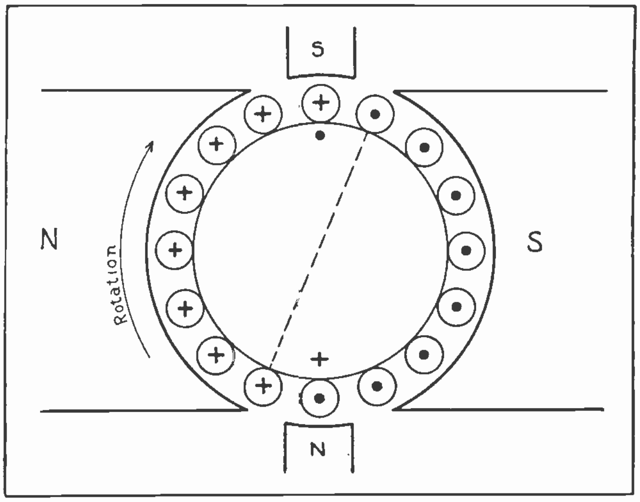

Fig. 53. This sketch illustrates the manner in which interpoles generate voltage opposite to that of self-induction in the conductors which are shorted by the brushes.

When the brushes are to be rotated the bolts which hold the end plate to the field frame are loosened slightly and the entire end plate is shifted. This allows the armature coils to be commutated at a point where the effects of the interpole are just great enough to neutralize or balance self-induction.

Before removing the end plate to make repairs on a machine of this type, it is well to mark its position, so that you can be sure to get it replaced in the correct position. This can be done by making one or two small marks in line with each other on both the field frame and the end plate. The marks can be made with a file or prick punch.

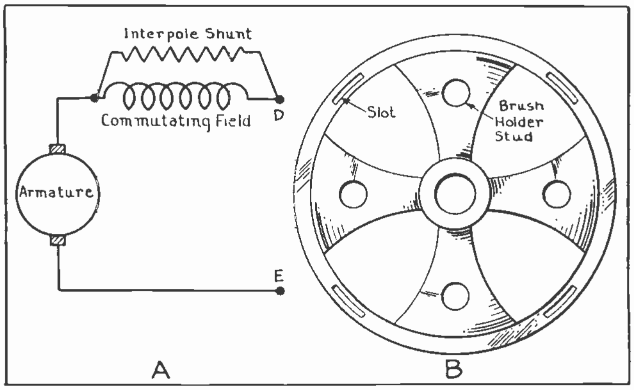

Fig. 54. At "A" is shown the connection of an interpole shunt for varying the strength of the commutating field. "B" shows an end bracket with slots to allow it to be rotated slightly to shift the brushes. The brush holders on this machine would be mounted on this end bracket.

62. ADJUSTING INTERPOLES BY CHANGING THE AIR GAP

The strength of interpoles can also be varied by placing iron shims or thin strips between the interpole and the field frame of the machine, as shown in Fig. 55. It is possible in this manner to vary the width of the air gap between the face of the interpoles and the armature core.

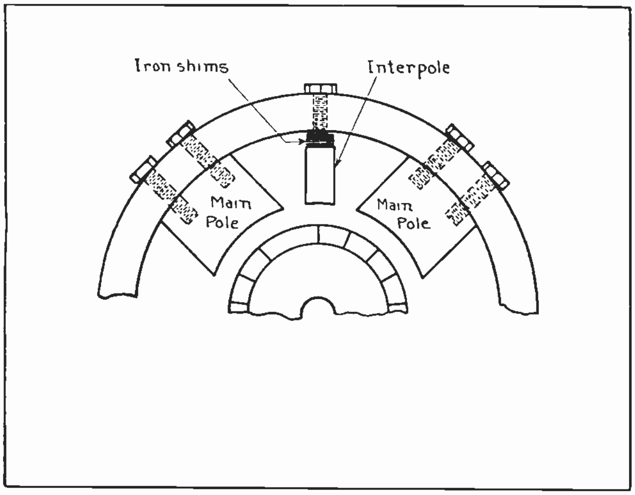

Fig. 55. Thin iron shims can be used under an interpole to vary its strength by changing the air gap between the pole and the armature.

Decreasing the air gap reduces the magnetic reluctance of the interpole field path, thereby strengthening its flux and increasing its effect on commutation. This method can be used on machines of any size and when no other visible means of varying the interpole strength is provided, shims are probably used.

On some machines, the number of interpoles may only be one-half the number of main field poles; in which case they will be placed in every other neutral plane and will all be of the same polarity. By making these interpoles of twice the strength as would be used when a machine has one for each main pole, we can still effectively neutralize the self-induction in the coils. This is true because, with a modern drum-wound armature, when one side of any coil is in one neutral plane the other side will be in the adjacent neutral plane.

For this reason, if interpoles are placed in every other neutral plane, one side of any coil will always be under the interpole while this coil is undergoing commutation. This is illustrated by the sketch in Fig. 56, which shows a four-pole generator with only two interpoles.

As both sides of any coil are in series, the double strength of the interpole over one side will neutralize the effects of self-induction in the entire coil. This type of construction reduces the cost of the generator considerably and is often used on machines ranging up to six-pole size.

63. COMMUTATION ON MOTORS

The problem of obtaining sparkless commutation on D. C. motors is practically the same as with D.C. generators.

Motors as well as generators must have the connections from the brushes to the coils reversed as the coils pass from one pole to another of opposite polarity. This is necessary to keep the current from the line flowing in the right direction in all coils in order to produce torque in the same direction under all field poles.

During commutation, the coils of a motor armature are momentarily short circuited by the brushes, the same as with a generator.

This shorting and commutation should take place while the coils are in the neutral plane between the field poles, where they are doing the least work or producing the least torque.

We also know that the coils of any motor armature have a high counter-voltage generated in them as they rotate under the field poles. This counter-voltage will be at its lowest value while the coils are passing through the neutral planes; which is another reason for having commutation take place at this point in a motor.

64. POSITION OF NEUTRAL PLANE IN MOTORS

The neutral plane of a D.C. motor will also shift with load variations and changes in armature current, but this shift will be in the opposite direction to what it is in a generator. This is due to the fact that the rotation of a motor will be opposite to that of a generator if the current direction is the same in the motor armature as in the generator armature.

Motor coils also have counter-voltage of self-induction produced in them when they are shorted by the brushes. In a motor, the direction of this self-induced voltage will be opposite to that in a generator, as the motor armature currents are in the opposite direction to those in a generator armature of the same direction of rotation.

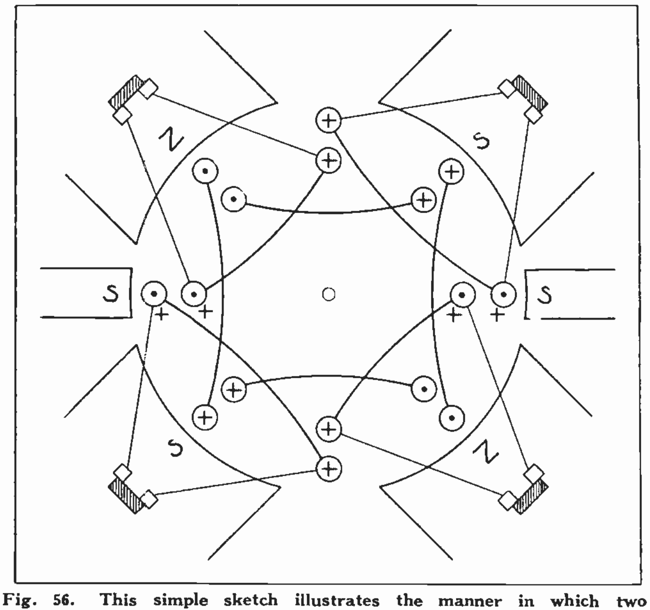

Fig. 56. This simple sketch illustrates the manner in which two interpoles can be used to neutralize self-induction in the coils of a four-pole machine.

We can, therefore, improve commutation on a motor by shifting the brushes in the opposite direction to that used for a generator. **Motor brushes should be shifted against the direction of rotation, when the load is increased.**

Fig. 57 is a sketch of the armature conductors and field poles of a simple D.C. motor, showing the position of the neutral plane with respect to the direction of rotation.

The heavy symbols in the six armature conductors on each side show the direction of the applied current from the line, which is flowing "in" on the conductors at the right and "out" on those on the left side. The lighter symbols in the single conductors at the top and bottom show the direction of the currents set up in this coil by self-induction when the coil is shorted. The symbols shown outside of the conductor circles indicate the direction of the counter E.M.F. produced in the motor winding. This counter-voltage always opposes the direction of the applied line voltage.

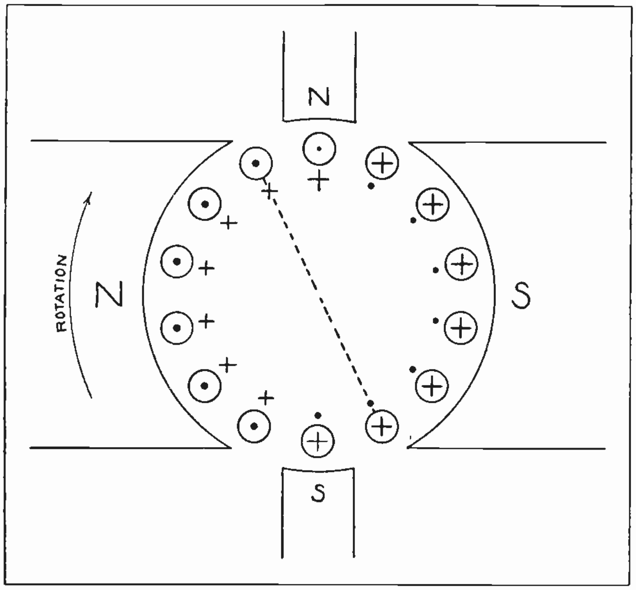

Fig. 57. This sketch shows the position of the neutral plane with respect to rotation in a motor. Compare this with Fig. 53 for a generator.

65. POLARITY OF INTERPOLES FOR MOTORS

Interpoles or commutating fields can also be used on motors to improve commutation at all loads and to eliminate the necessity of frequent shifting of the brushes.

On a motor, these interpoles are connected in series with its armature, the same as those of a generator are, but **the polarity of motor interpoles must be the same as that of the adjacent main poles in the opposite direction to rotation.** This is because the self-induced voltages in the coils shorted by the brushes in a motor are opposite to those in a generator with the same direction of rotation.

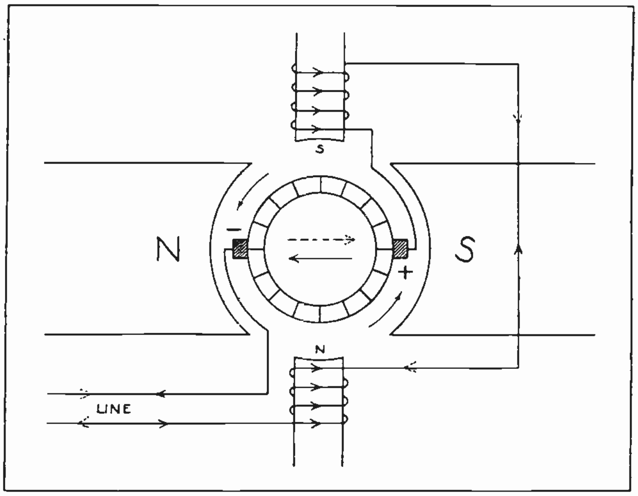

Fig. 58. This diagram shows the connections of the interpoles for a two-pole generator or motor.

Fig. 58 shows the connections of the interpoles for a two-pole D.C. motor. You will note that one armature lead is connected directly to the negative brush, while the other lead connects first to the commutating field and then, through these poles, to the positive brush.

If this connection is properly made when the machine is assembled, it is not necessary to make any change in the connections of the commutating field when the motor is reversed. Either the armature current or field poles must be reversed to reverse the rotation, so that the relation of the commutating poles will still be correct.

This connection can be the same whether the machine is operated as a motor or generator, because a generator rotated in the same direction as a motor will generate current in the opposite direction through the armature. This is shown by the dotted arrows in Fig. 58, while the solid arrows show the direction of motor current.

As the commutating poles are in series with the armature, this reversed current will also reverse the polarity of the commutating field, and maintain the proper polarity for generator operation.

These principles of commutation and interpoles should be kept well in mind, as an efficient maintenance electrician or power plant operator will never allow unnecessary sparking to damage the brushes and commutator of machines he has charge of.

COYNE
Electrical School
CHICAGO ~~ ILLINOIS
ESTABLISHED 1899

DIRECT CURRENT POWER AND MACHINES

Section Two

Switchboards and Switchgear
Knife Switches, Circuit Breakers, Relays, Busses
Switchboard Layout and Wiring
D. C. Meters
Voltmeters, Ammeters, Wattmeters
Kilo-watt Hour Meters, Operation, Reading and Testing
Recording Instruments, Demand Meters
Wheatstone Bridge
Megger.

D. C. SWITCHBOARDS

In power plants, substations, and industrial plants where large amounts of electric power are generated or used, it is necessary to have some central point at which to control and measure this power. For this purpose switchboards are used.

The function of the switchboard is to provide a convenient mounting for the knife switches, circuit breakers, rheostats, and meters which are used to control and measure the current. The equipment located on the switchboard is generally called **switchgear.**

66. TYPES OF SWITCHBOARDS

Switchboards are of two common types, known as **panel boards** and **bench boards.** The latter are also called **Desk-type** boards.

Panel-type boards consist of vertical panels of the proper height and width, on the face of which the switchgear is mounted. On the rear of the board are located the bus bars and wires which connect the switches, circuit breakers, and meters to the various power circuits which they control or measure the energy of. Fig. 59 shows a panel-type switchboard for a D. C. power plant. Examine it carefully and note its construction and the arrangement of the equipment mounted on it.

Bench-type switchboards have the lower section built like a bench with a sloping top, and above the rear edge of the bench section is a vertical panel which contains the instruments.

The sketch in Fig. 60 shows an end view of a bench-type switchboard with the panels mounted on a pipework frame. Boards of this type are used mostly for remote-control switchboards, where the switches and circuit breakers are operated by electro-magnets and solenoids, which are controlled by small push-button or knife switches on the bench portion of the board.

Another type of switchboard which is frequently used in industrial power plants is known as the **truck type.** These boards are built in separate sections, which can be drawn out on rollers for convenient repairs and adjustment to switchgear. Fig. 61 shows a section of a truck-type board, removed from the main board, and showing the oil switch and bus bars which are mounted in the frame behind the front panel.

Bench-type and truck-type switchboards will be more fully explained in a later section on A. C. switchboards.

67. SWITCHBOARD PANEL MATERIALS

Switchboard panels are commonly made of slate or marble, as these materials are good insulators and have good mechanical strength as supports for the switchgear.

Slate is cheaper than marble and is easier to drill and cut for mounting on the frames and for mounting the switchgear. Slate is not quite as good an insulator, however, and is usually not used for voltages over 500 or 750.

Marble is a better insulator and can be used on voltages up to 1100. Marble presents an excellent appearance, but it is more difficult to keep clean. It is also very hard to drill or cut.

A newer material recently developed for switchboard panels, and known as **ebony asbestos,** has a number of very important advantages for this work. It is made of a composition material in which asbestos fibre and electrical insulating compounds are mixed and formed under great pressure into smooth-surfaced panels.

This material has a beautiful natural black finish, is lighter in weight, and has better insulating qualities and mechanical strength than either slate or marble. In addition to these advantages, ebony asbestos is also much easier to drill and cut, which makes it easy and economical to install.

Steel panels are also coming into use for switchboards, and have the advantage of great strength and durability. The switchgear on steel panels must, of course, be insulated from the metal at all points.

67-A. GENERATOR AND FEEDER PANELS

The common panel-type switchboards are usually made about ninety inches high, and as wide as necessary to provide the required space for the equipment needed. They are practically always built up in vertical sections or panels, each of which is used for the control of separate circuits. Panels of greater width are used for the main circuits or generator circuit control, and sub-panels of narrower width are used to control the separate feeder **circuits,** which supply the energy to the various lines or power circuits controlled from the switchboard.

Fig. 59 shows two generator panels on the right, and six feeder panels on the left. Note the difference in the size of the switches and circuit breakers on the main panels and sub-panels. By referring to this same figure, you will also note that each vertical panel is divided into three sections. This type of construction facilitates repairs and changes of certain equipment, without disturbing the rest of the equipment on that panel.

For example, if the switches on a panel are to be changed to others of different size or type, the sec-

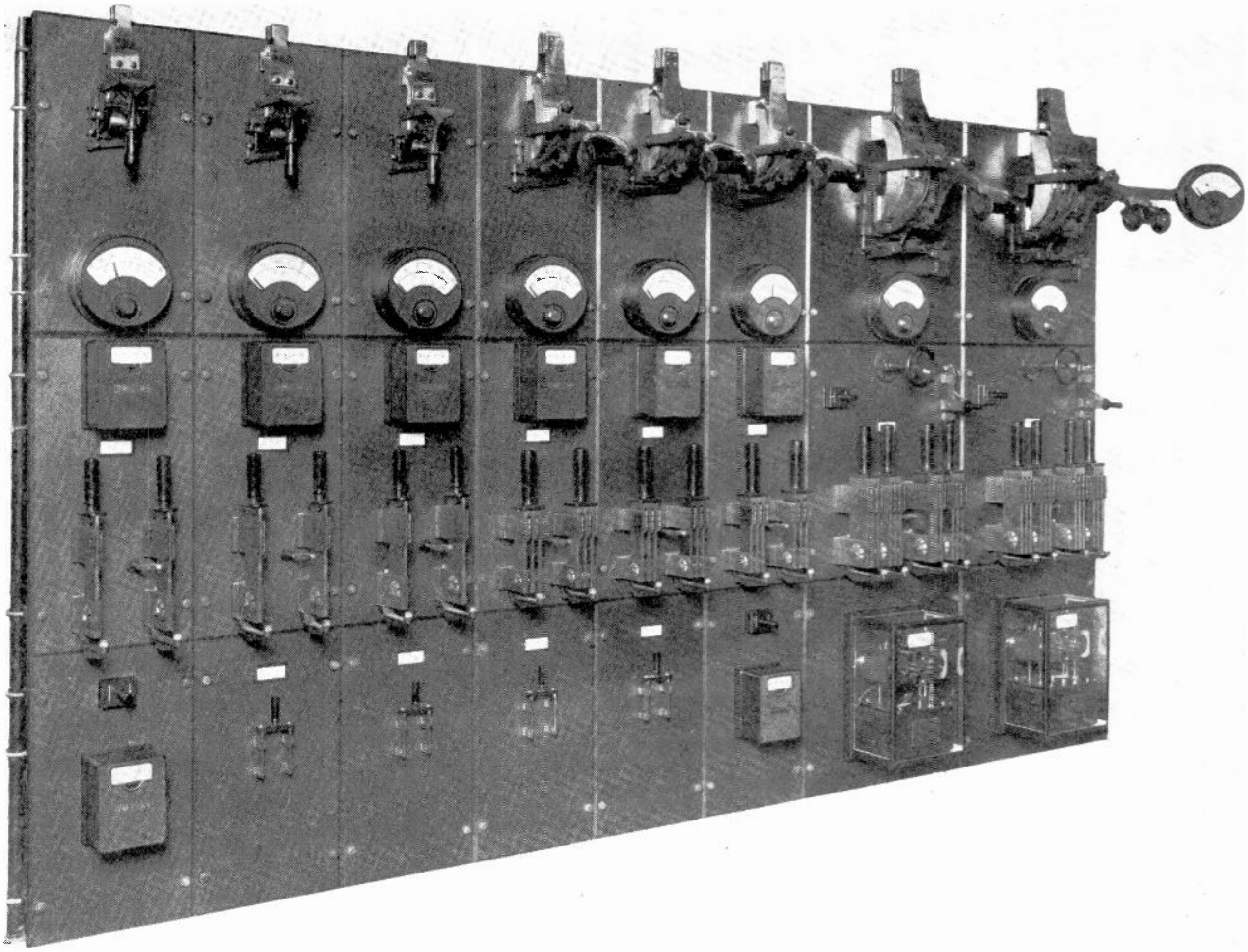

Fig. 59. This photo shows a modern panel type switchboard equipped with knife switches, meters, and circuit breakers. The two large panels on the right are the main generator panels and are equipped with field rheostats and instrument switches and much larger circuit breakers. The six smaller panels on the left are feeder or distribution panels. Examine all the parts and details of construction of this board very carefully, and refer to this figure frequently while reading the accompanying pages.

tion containing them can be removed and a new one drilled and inserted. It is not necessary to disturb the other two sections, or to leave unsightly holes in the board where the old switches were removed.

Sectional construction of panels also reduces the danger of cracked panels which might result from mechanical strains or vibration if larger single panels were used.

Switchboard panel material can be obtained in thicknesses from ½", for very small boards for light duty, to 2" or more for large heavy-duty boards. These panels are usually beveled on the corners of the front side, for better appearance.

68. SWITCHBOARD FRAMES

Switchboard panels are commonly mounted on either angle iron or pipe-work frames.

Where angle iron is used, it should be of the proper size to give the required strength and rigidity for proper support of the panels and switchgear. The board should not bend or vibrate noticeably during operation of heavy knife-switches or circuit-breakers.

Angle iron of 1½" to 3" is commonly used. It can be cut to proper length by means of a hack saw, and drilled for the bolts with which the panels are attached, and also for the bolts which hold the angle irons of adjoining panels together.

Fig. 62 shows how the panels should be bolted to the angle irons, and the method of bolting the angle irons together at "h2". The panels should be carefully marked for drilling, so they will line up neatly and give the proper appearance when finished.

Short bolts of the proper length, with washers and nickle-plated cap nuts, can be used to provide good appearance of the front surface of the board.

These bolts and nuts should be tightened sufficiently to hold the panels securely, but not tight enough to crack the corners of the panels.

The bolt holes can be drilled in the panels with ordinary metal drills used in a breast drill or yankee drill. Slate and marble are hard and should, therefore, be drilled slowly or the drill should be cooled while it is cutting. Ebony asbestos is very easy to drill; in fact, nearly as easy as hardwood.

The lower ends of the angle irons should have

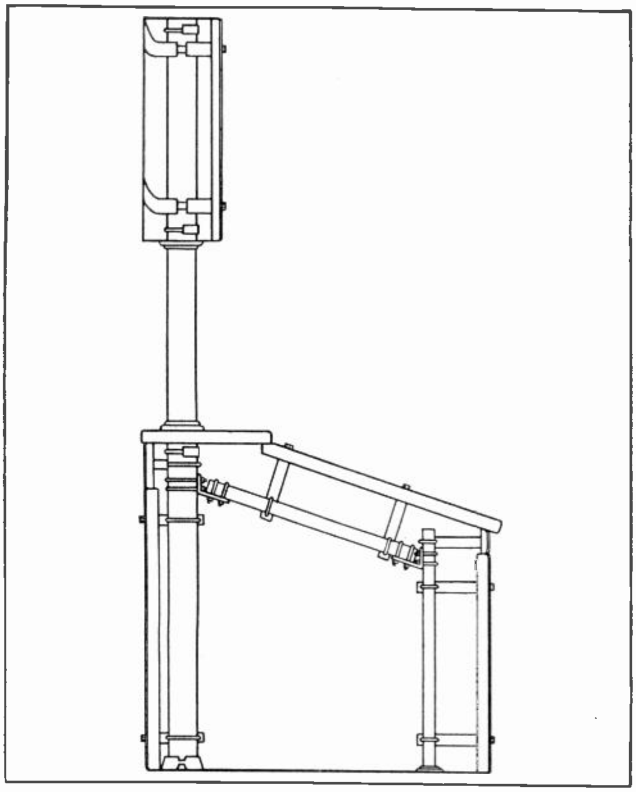

Fig. 60. The above diagram shows an end-view of a "bench-type" switchboard mounted on pipe frame work. This type of board is often referred to as "desk type".

"feet" bent in them or attached with bolts, for secure anchorage to the floor. The upper ends should be braced to keep the switchboard rigid.

69. PIPE FRAMES AND THEIR ADVANTAGES

Pipe-work frames are very convenient to install, as they do not require drilling as angle iron does. The pipe frame-work is held together by special clamps, as shown in Fig. 60. Fittings with holes for the panel bolts are also provided to clamp on the pipes. The pipes are attached to the floor with threaded floor-flanges.

Standard pipe sizes can be used; the common sizes being 1¼" to 2", or larger for very heavy boards. Special clamp fittings can be obtained for mounting bus insulators and various devices on the rear of the board. Other fittings are used for attaching brace pipes to secure the framework and board in a vertical position.

Pipe-work frames are very popular and are extensively used, as they provide a very flexible frame which can easily be adjusted to fit various panels and devices by merely sliding the clamp fittings. One of the pipes of the frame can be seen on the left end of the board shown in Fig. 59.

70. KNIFE SWITCHES. TYPES

Knife switches, used for controlling the various circuits on switchboards, are made in single, double, and three-pole types. The smaller and medium sizes are generally two or three-pole; but the larger ones are generally single-pole, for greater ease of operation. Three-pole switches or three single-pole switches are used to control the circuits of compound generators, the three poles being used in the positive, negative, and equalizer leads.

Three-pole switches are also used for circuits of the Edison three-wire system. Other D. C. circuits are usually two-wire, and they use either one two-pole or two single-pole switches.

Equalizer switches are sometimes mounted on small panels on pedestals near the generators, to eliminate the necessity of running equalizer busses

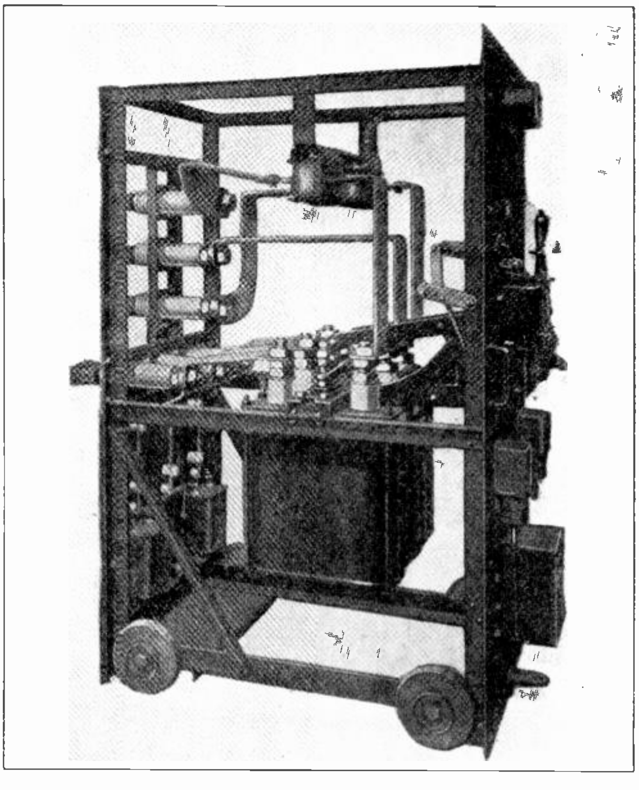

Fig. 61. This view shows a unit of a "truck type" switchboard on which the sections can be drawn out on rollers to make repairs and adjustments more conveniently.

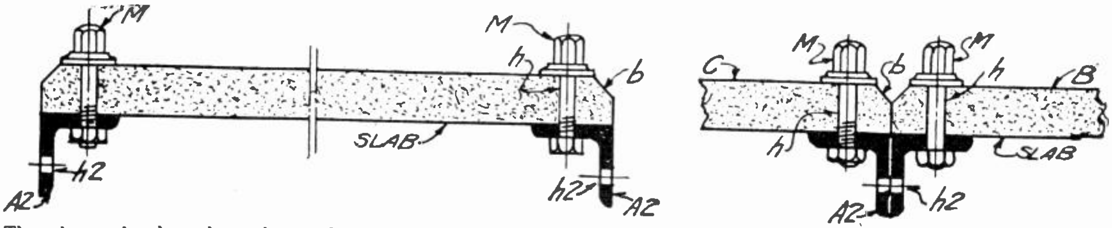

Fig. 62. The above sketches show the method of attaching switchboard panels to the angle iron frame work. Note how the panels are bolted to angle irons, and the angles bolted together between panels. Also note the type of bolts, nuts, and washers used with this construction.

to the switchboard. In such cases, the main panels for compound generators will also use two-pole switches.

71. CONSTRUCTION OF SWITCHES

Knife switches consist of three essential parts called the **blade, hinge,** and **clips.** The blades are made of flat copper bus bar material and are attached to the hinges by means of short bolts and spring washers. This fastening gives the required tension for good contact between the blades and hinges, and yet allows freedom of operation. See Fig. 63.

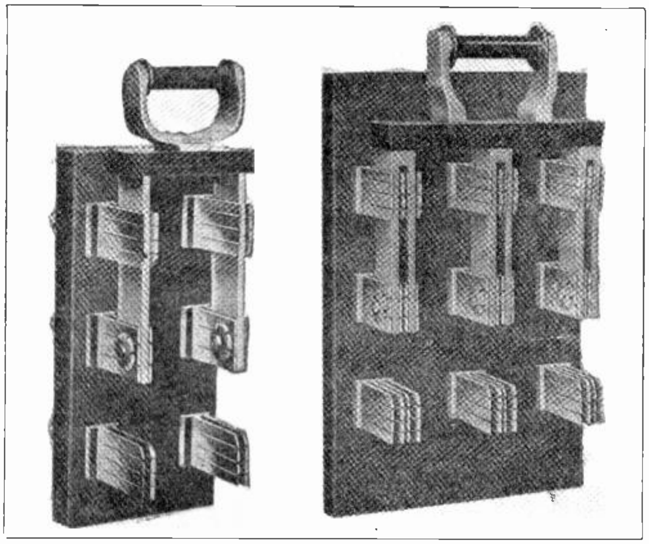

Fig. 63. Above are shown a double-pole and three-pole knife switch. Note carefully the construction of the switch plates, hinges, and clips.

Switch clips are made of two or more thin, springy pieces of copper, mounted in a block. The blades are inserted between these clips when the switch is closed. The clips are usually slotted to make them more flexible and allow them to make better contact with the blade of the switch. These details of construction can be observed by examination of the switches shown in Fig. 63, and also those on the switchboard in Fig. 59.

Switch blades are equipped with insulating handles and guards on their free ends. The hinges and clips usually have threaded studs of copper attached directly to them, for convenient mounting on the switchboard panels. Bus bars or cable lugs on the rear of the board are attached to these studs by means of extra nuts provided with them.

The switch at the left in Fig. 64 shows the studs and the nuts used both for holding the switch on the board and for attaching cable lugs or bus bars. This switch and also the double-pole switch on the right in this figure, are both of a newer type which has double blades and single clip prongs.

Knife switches on switchboards are practically always mounted with the blades in a vertical position and the clips at the top. This allows easier operation and prevents danger of the switch falling closed by gravity.

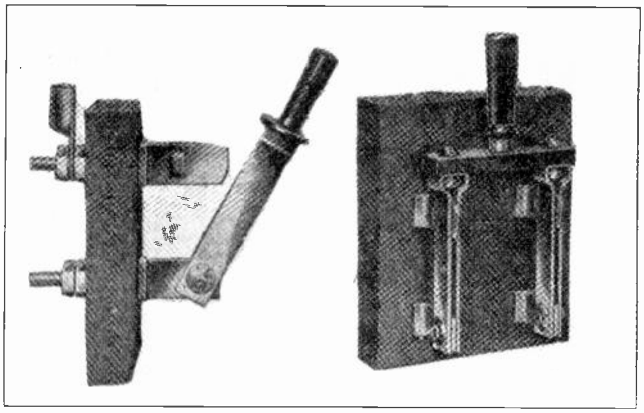

Fig. 64. Single-pole and double-pole switches of a modern type. Note the manner in which the hinges and clips are attached to the board and the method of making cable or bus connections to the studs on the back of the board.

72. SWITCH MOUNTING AND CURRENT RATINGS

In mounting switches on the panels, the hinges and clips should be carefully lined up so that the blades will fit well and make good electrical contact.

All knife switches are rated in amperes according to the copper area of their blades and the contact area of clips and hinges. They are commonly made in sizes from 50 amperes to one thousand ampere capacity; and for heavy power circuits they are made to carry 6000 amperes or more.

You will note that a number of the switches on the right-hand side of the switchboard in Fig. 59 have multiple blades in each pole. This gives a much greater contact area between the blade surfaces and hinges and clips, and also allows air to circulate through the switches to cool them.

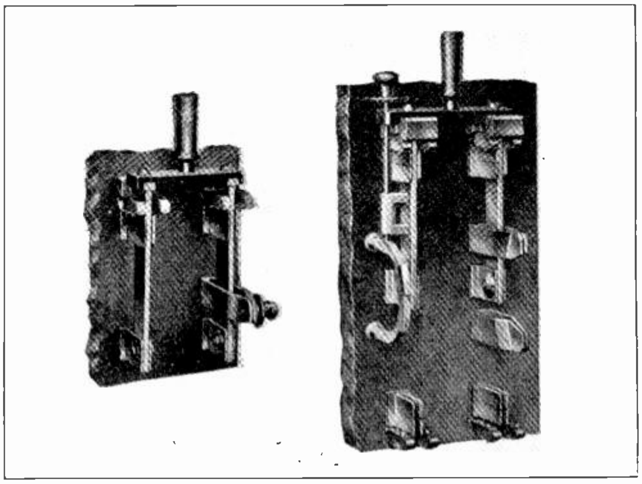

Fig. 65. A number of special types of knife switches are made with auxiliary clips and blades as shown above. These two switches are used as field discharge switches for generators.

Switches should never be loaded above their rated capacity in amperes for any great length of time, or they will overheat. Hinges or clips which are loose or poorly fitted will also cause overheating of the switch at these points. If switches are allowed to overheat too much, the copper will become soft and lose the springy qualities which are necessary for tight fitting of the clips. Overheated switches often cause the copper clips or blades to turn a bluish color. Switches that have been heated to this extent will probably need to be replaced.

73. CARE AND OPERATION OF SWITCHES

New switches should be carefully fitted and "ground in" before loading. "Grinding in" can be done by coating the switch-blades with vaseline or oil mixed with abrasive powder, and then opening and closing the switch a number of times. This grinds and polishes the sides of the blades and clips to make their surfaces perfectly parallel and provide a good contact between them.

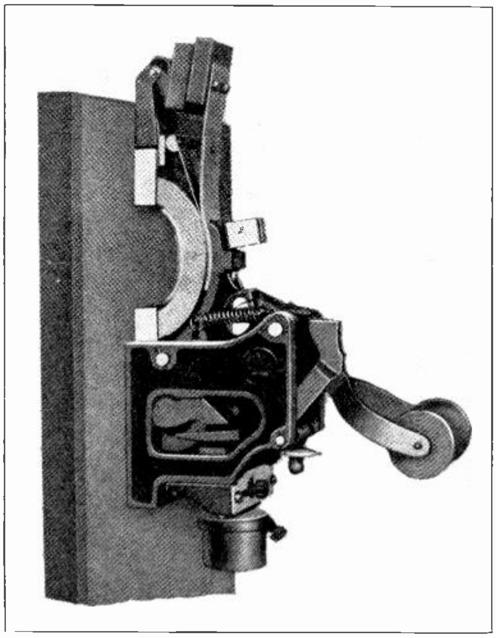

Fig. 66-A. This photo shows a common type of air circuit breaker in closed position. Note the manner in which the main contacts and auxiliary contacts connect with the stationary contacts on the panel.

Never open knife-switches under heavy load, if they have a circuit-breaker in series with them. Opening the switch under load will draw an arc at the point where the blades leave the clips. These arcs tend to burn and roughen the blades and clips, making the switch hard to operate and also destroying the good contact between the blade and clips.

Where circuit-breakers are provided they should always be tripped open first and the knife-switch opened afterward. This prevents arcing at the switch and is also much safer for the operator, as the arcs drawn by opening switches under heavy current load may be very dangerous.

Knife-switches should be kept lubricated with a thin film of petroleum jelly or light vaseline.

Special types of knife-switches, with snap-action blades operated by springs, are made for use in the shunt field circuits of generators. Field circuit switches often have auxiliary blades to close the field across a resistance just before the main blades open. Such switches are called **field discharge switches.** Two types of these switches are shown in Fig. 65. Their purpose is to prevent the setting up of high voltages by self-induction due to the collapse of the flux around the shunt field coils when this circuit is opened.

74. CIRCUIT BREAKERS

For opening heavy power-circuits in case of overload or short circuits, automatic circuit breakers are commonly used. These are divided into two general classes, known as **air circuit-breakers** and **oil circuit-breakers.** Air breakers will be described here and oil breakers will be covered in a later section.

An air circuit-breaker is a type of electric switch equipped with special contacts and a trip coil to open them automatically in case of overload on the circuit. Thus they give the same protection to equipment which would be afforded by fuses.

For circuits which frequently require overload protection, circuit-breakers are much to be preferred over fuses, as the breakers can be quickly closed as soon as the fault is removed from the circuit.

Circuit breakers are commonly made in single-pole, double-pole, and three-pole types, and for various current ratings, the same as knife switches are. Figures 66-A and 66-B show two views of a single-pole circuit-breaker. The view in 66-A shows the breaker in closed position, and in 66-B it is shown open.

The main current-carrying element or bridging contact is made of a number of thin strips of copper curved in the form of an arch and fitted closely together. This copper leaf construction permits the ends of this main contact to fit evenly over the surface of the two lugs, or stationary contacts, which are mounted in the switchboard and attached to the bus bars.

75. CIRCUIT-BREAKER OPERATION

When the breaker is closed by means of the

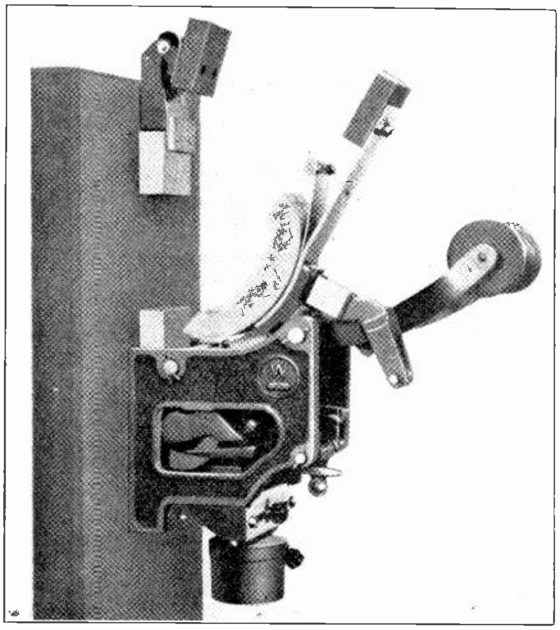

Fig. 66-B. This view shows the same circuit breaker as in Fig. 66-A, except that it is now in open position. Again note carefully the construction and position of the main contacts and arcing contacts. Also note the trip adjustment on the bottom of the breaker.

handle, a lever action is used to force the main contact tightly against the stationary contacts under considerable pressure.

Auxiliary arcing contacts and tips are provided above the main contact, as shown in the figures. The intermediate contact, or the one directly above the main contact, consists of the heavy copper spring with a removable copper tip. The top arcing contact on the movable element is carried by a long copper spring and has a removable carbon tip.

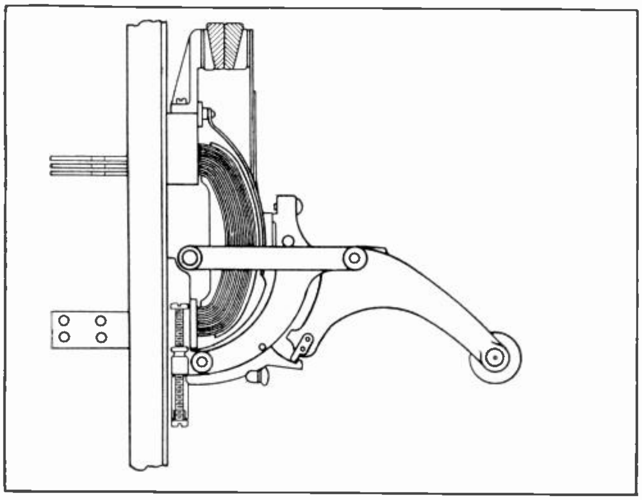

Fig. 67. This sketch shows a side-view of a circuit breaker in closed position and illustrates the copper "leaf" construction of the main contact. Note the copper stubs which project through the board for connections to bus bars.

When the breaker is opened, the main contact opens first and allows the current to continue flowing momentarily through the auxiliary contacts. This prevents drawing an arc at the surface of the main contact and eliminates possible damage to this contact surface, which must be kept bright and smooth and of low resistance, in order to carry the full load current without loss.

The intermediate contact opens next and it may draw a small arc, because the remaining circuit through the carbon tips is of rather high resistance.

The carbon contacts open last and the most severe arc is always drawn from these points. Carbon withstands the heat of the arc fairly well, and these contacts are easily and cheaply renewed whenever they have been burned too badly by repeated arcs.

Circuit-breakers of this type can usually be tripped open by means of a small lever or button, as well as by the automatic trip coil. When released they are thrown quickly open by the action of springs or gravity on their moving parts.

Fig. 67 is a sketch showing a side view of an air breaker in which can be seen the leaf construction of the main contact, and also the bus stubs to which the connections are made at the rear of the board.

When a circuit-breaker is closed the contacts close in the reverse order, the carbon tips closing first, intermediate contact second, and the main contact last. This construction and operation eliminates practically all arcing and danger of pitting at the ends of the main contacts. It is very important, however, to keep the auxiliary contacts and carbon arcing tips properly adjusted and occasionally renewed, so that they make and break contact in the proper order.

76. CIRCUIT-BREAKER TRIP COILS OR OVERLOAD RELEASE

Fig. 68 shows a single-pole and a double-pole circuit breaker which are both in closed position. The overload coils, or trip coils, can be seen on each of the breakers in this figure. These coils are of the series type and consist of a very few turns of heavy copper bar or cable, inside of which is located an iron plunger.

When the coil is connected in series with the line and breaker contacts, any overload of current will increase its strength and cause it to draw up the plunger. The plunger then strikes the release latch and allows the breaker to open.

An adjustment is provided for raising and lowering the normal or idle position of the plunger so that the breaker can be set to trip at different currents and loads. Trip coils of this type are known as **series-type overload release coils** and are commonly used on breakers up to 500 amperes capacity. The circuit-breakers shown in Figures 66-A and B have electro-magnets and armatures which trip the holding latches, and also an oil dash-pot to delay the opening of the breaker on light overloads. The adjustments for these devices can be seen below the breaker in these figures.

77. SHUNT TRIP COILS AND OVERLOAD RELAYS

For circuit breakers of 500 amperes and more, it is not usually practical to use series overload-coils, because of the large sized conductor which would be needed to carry the current.

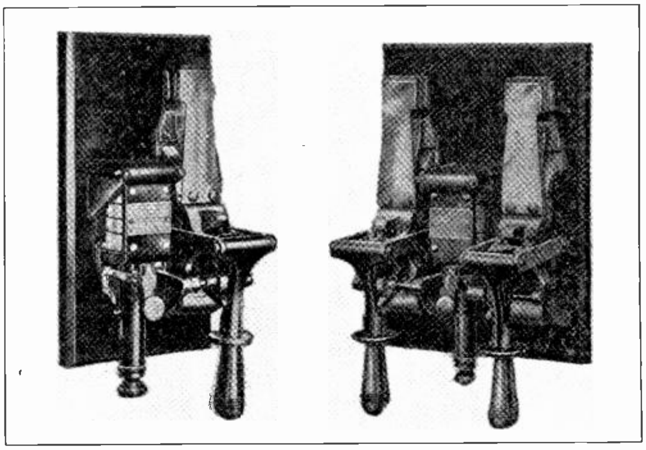

Fig. 68. Single-pole and double-pole, circuit breakers, showing the overload trip coils and their adjusting mechanism for operation of the breakers at different current loads.

On these larger breakers, **shunt trip coils are** used, and these coils are wound with a greater number of turns of small wire and are operated from an ammeter shunt. Shunt trip coils are not connected directly to the ammeter shunts, but are operated by a relay which obtains from the ammeter shunt the small amount of energy needed for its coil.

The greater the current flow through ammeter shunts, the greater will be the voltage drop in them. This voltage drop is usually only a few milli-volts, and as it is difficult to wind the shunt trip coils to operate on this small fraction of a volt, **overload relays** are generally used to close a circuit to these coils.

The overload relay is a very sensitive instrument, having a small coil designed to operate on a very low voltage of 50 to 100 milli-volts; and this coil is connected across the ammeter shunt.

The tension spring on the armatures of these relays is adjustable so the relay can be made to close its contact and energize the shunt trip coil on the breaker, at any desired current load within the range for which the relay and breaker are designed.

78. REVERSE CURRENT RELAYS

Some circuit-breakers are also equipped with reverse current protection to cause them to open in case of reversed polarity of a generator or reversed current flow in the line.

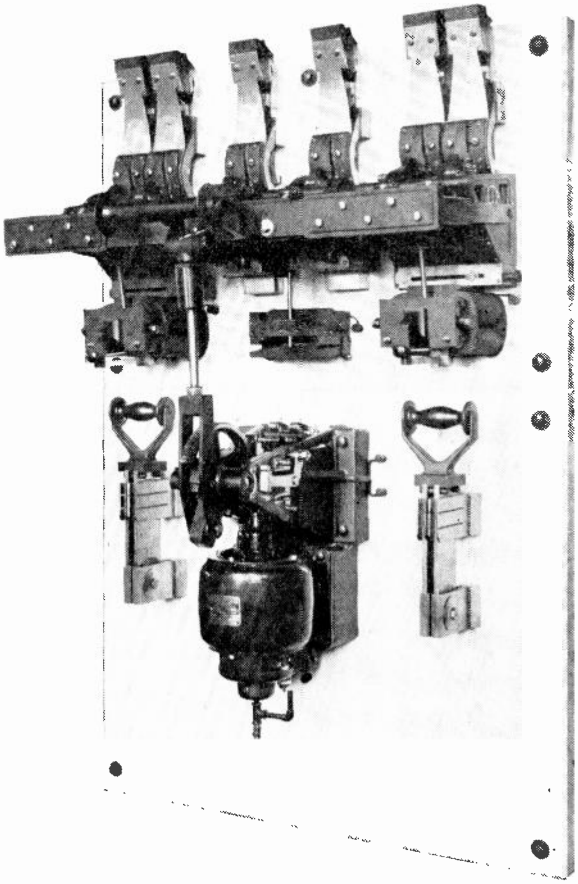

Fig. 69. Large, heavy duty circuit breaker equipped with a motor for automatic reclosing, after it has been tripped either by an overload, or by remote control.

Reverse-current relays are used to trip the breakers to obtain this protection. These relays have two elements or windings similar to the field and armature of a simple motor. One is called the **potential or voltage element,** and the other the **current element.**

The current coil or element is connected across the terminals of the ammeter shunt. The potential coil is connected directly across the positive and negative leads or busses and serves to maintain a constant field flux.

The direction of current through the current element or moving coil of the relay is determined by the direction of current through the ammeter shunt. When the current through the ammeter shunt is in the normal direction, the moving coil tends to hold the relay contacts open and keep the shunt trip-coil of the circuit-breaker de-energized.

If the current through the ammeter shunt is reversed this will reverse the polarity of the voltage drop across the shunt and send current through the movable element of the relay in the opposite direction. This reverses its torque and causes the coil to turn in a direction which closes the relay contacts and energizes the shunt trip-coil which trips the breaker.

These relays are also adjustable so they can be set to open the circuit-breaker at the desired amount of reversed current.

79. CIRCUIT-BREAKER CARE AND MOUNTING

Circuit-breakers are one of the most important pieces of switchgear and afford a great deal of protection to the electrical machinery on their circuits as well as to operators. They should be kept in good repair and adjustment, and should be frequently tested to be sure that they will open freely and quickly when necessary. The main contacts should be kept clean and well fitted, and arcing contacts should be renewed when badly burned. Operating springs and trip coils should be kept carefully adjusted.

Heavy-duty circuit-breakers require considerable force on the handle to close them, and also deliver quite a shock to the switchboard when they fly open. For this reason, switchboard panels carrying heavy breakers should be thick enough and sufficiently well braced to provide a rugged mounting for the breaker, and to prevent vibration of the board when the breaker is operated.

Fig. 69 shows a large circuit-breaker which also has a motor for automatically reclosing it. Such breakers can be equipped for remote control by the operator or for automatic reclosing by a time element or relay, after the breaker has been tripped open for a certain definite period.

80. INSTRUMENT SWITCHES

In addition to the knife switches and circuit-breakers, special switches are used for the switching and control of motor circuits. These may be of the **plug type, pull and push button type,** or **rotary button type.** These switches are mounted in openings drilled through the board, so that the handles or buttons project from the face of the board; and the switch element is mounted on the rear for con-

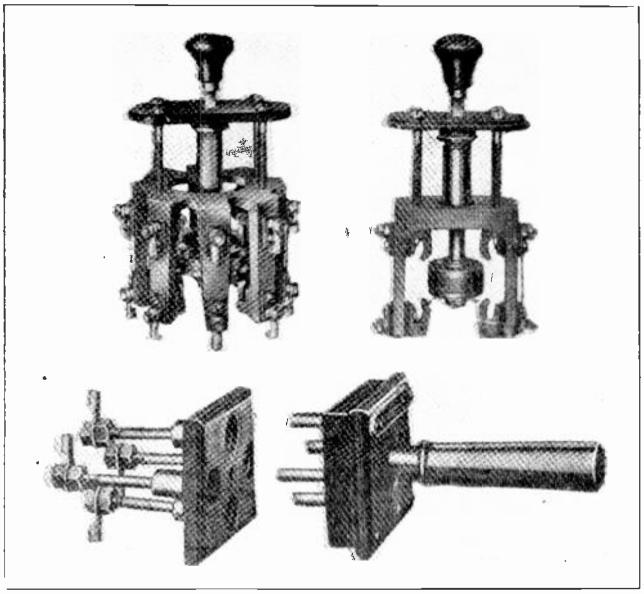

Fig. 70. Instrument switches of the above types are frequently used for changing the connections of various meters to different switchboard panels and busses.

venient connections to the smaller wires of instruments and relays.

Fig. 70 shows two instrument switches of the pull and push type in the upper view and one of the plug type in the lower view.

81. BUS BARS. MATERIALS AND MOUNTING

Copper **bus bars** are commonly used for connecting together the various switches, circuit breakers, and heavy power circuits on switchboards. Long busses are usually mounted on insulators attached to the rear of the switchboard frame or panels, while short lengths may be supported by the studs or bolts to which they connect.

Bus bars are generally run bare for the lower voltages up to 750 or, in some plants, even higher. Busses for higher voltages can be wrapped with varnished cloth or friction tape after they are installed.

Copper bus bar materials can usually be obtained in sizes from 1/8" to 1/2" in thickness, and from 1" to 4", or even 6" wide. When very heavy currents are to be carried, several bus bars are usually run in parallel and mounted with their flat sides vertical, as shown in the right-hand view in Fig. 71.

This arrangement of the busses allows air to circulate freely through them and helps to keep them cool. The view on the right in Fig. 71 shows two separate busses, "A" and "B", each consisting of three bars. One set is the positive bus and one is negative. Both sets are mounted in a base of insulating material, shown at "C", and supported by metal brackets attached to the switchboard frame.

The insulation used for mounting and spacing the bars can be hard fibre, slate, bakelite, or ebony asbestos.

In the left view in Fig. 71 is shown a single bus bar supported by a porcelain bus insulator.

Busses of opposite polarity and for voltages up to 750 should be spaced several inches apart wherever possible. When they are run closer together they should be well mounted and braced so they cannot easily be bent or vibrated together.

82. CONNECTING BUS BARS TOGETHER

Where bus bars are joined together, they can be fastened either by means of bolts through holes drilled in the copper or by bus clamps which do not require drilling the bars.

Fig. 72 illustrates the use of a common type bus clamp, consisting of two triangular pieces with three holes for the bolts which draw the parts of the clamp up tightly and grip the bars together. These clamps are very easy to install, as they do not require any drilling of the bars.

Copper bus bars can be cut to the proper length with a hack saw; and where bolts are used for connections the bars can be drilled with an ordinary metal drill.

Fig. 73 shows the method of connecting bus bars to the studs of switches or circuit-breakers, by means of two nuts and a short strip of bar connected to the main bus by a clamp. All joints and connections in bus bars should be made tight and secure, to avoid overheating when the current flows through them. Where the sections join the copper should be well cleaned of all dirt and oxide.

Copper bus bars of the smaller and medium sizes can be easily bent to various angles where necessary, but care should be used not to bend the corners too sharply and cause the bar to crack.

In locations where the busses are well ventilated, **it is common practice to allow about 1000 amperes per square inch of cross-sectional area of the bars.**

83. EXPANSION JOINTS OR LOOPS IN BUSSES

Where long busses are run, some allowance should be made for expansion and contraction with changes in temperature, or sufficient strains may be set up to warp the busses or crack the switchboard panels by twisting the studs.

A special loop or "U"-bend is sometimes put in a long bus to absorb this expansion in the spring of

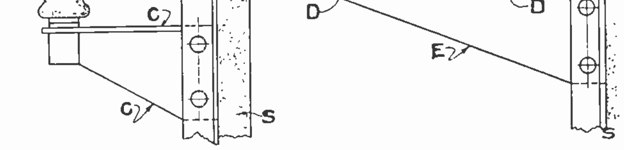

Fig. 71. The above diagrams show methods of mounting and installing bus bars on the back of switchboards.

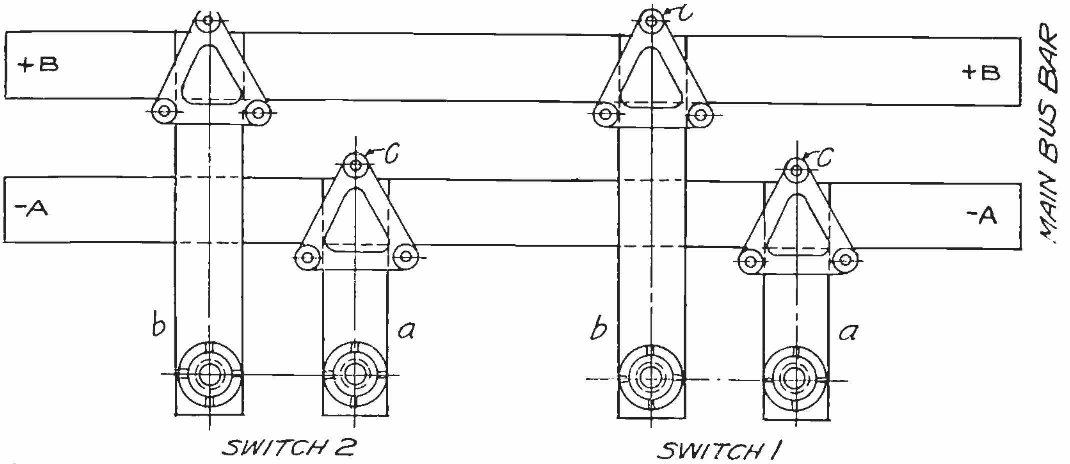

Fig. 72. Bus bars can be connected together by means of special clamps as shown above. These clamp pieces are held securely gripped to the busses by means of short bolts through the holes in their three corners. Clamps of this type save the trouble of drilling the copper busses.

the bend. In other cases, bus ends can be overlapped and held fairly tight with two bus clamps, but not tight enough to prevent the lapped ends from sliding on each other under heavy strains. One or more short pieces of flexible cable can then be connected around this joint to carry the current without heating. The cable ends should be soldered into copper lugs, and these securely bolted to the bus on each side of the slip joint.

84. SWITCHBOARD LAYOUT AND CIRCUITS

It is not a difficult matter to lay out and erect an ordinary switchboard for a small power plant or distribution center.

A plan should be laid out on paper for the required number of circuits. The desired switches, circuit-breakers, and meters for the control and measurement of the power, should be included in this sketch or plan.

After the load has been determined for the various circuits, the size of the switches and devices for the proper current ratings can be obtained from the manufacturer's specifications.

Panels can then be selected large enough to hold these devices in neat, uncrowded arrangement.

The simplest type of switchboard would at least contain switches for each of the main circuits and feeder circuits. There should also be on each of these circuits some form of overload protection, such as fuses or circuit-breakers.

On circuits of not over 500 amperes capacity and which are very seldom subject to overload, cartridge fuses will provide economical overload protection.

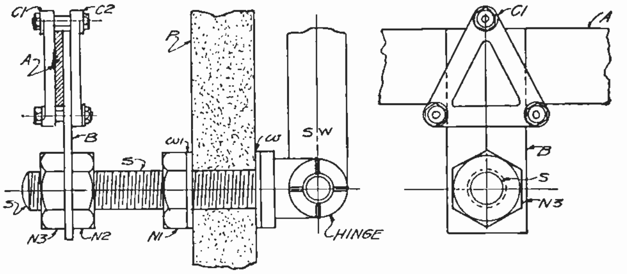

Fig. 73. Two views showing the method of connecting bus bars to the studs of switches and circuit breakers.

On heavy power circuits or any circuits which are subject to frequent overloads or occasional short circuits, circuit-breakers should be used. Circuit-breakers eliminate the replacement of fuse links and enable the circuit to be closed back into operation more quickly.

Usually it will be desired to measure the load in amperes on some of the circuits, if not on all of them. Ammeters of the proper size should be used for this purpose.

Where only one generator is used, one voltmeter may be sufficient to check the voltage of the main busses. Where several generators are operated in parallel, we will need one voltmeter for the main bus and probably one for each generator, in order to check their voltages before connecting them in parallel.

Sometimes one extra voltmeter is used for checking the voltage of any one of the generators which is being started up. This is done by the use of a voltmeter bus and plug switches for connecting the meter to whichever machine is being started up. A meter used in this manner is often mounted on a hinged bracket at the end of the switchboard, as shown in Fig. 59.

Wattmeters are often used to obtain instantaneous readings of the power in certain circuits. Watt-hour meters may be installed for showing the total power consumed per hour, per day, or per month, on any circuit.

In medium and larger sized plants, recording voltmeters and ammeters are often used to keep a daily record of the voltage and current variations. These instruments will be explained in a later section on D. C. meters.

85. SWITCHBOARD WIRING

Fig. 74 shows a wiring diagram for a simple D. C. switchboard with three panels, as shown by the dotted lines. The main generator-control panel is on the left, and contains the main switch, circuit-

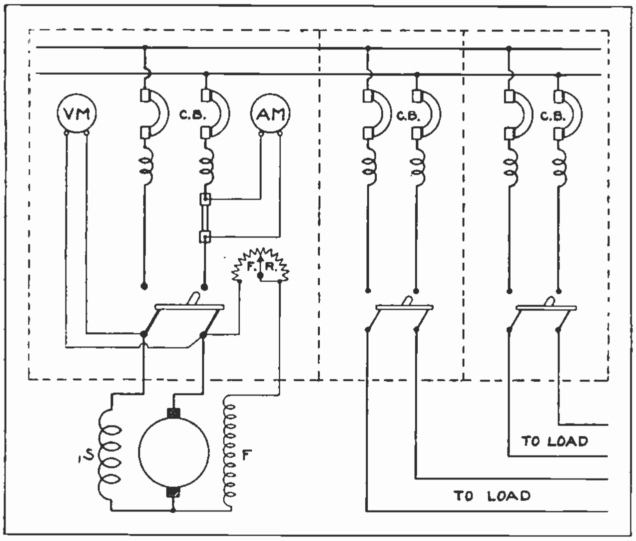

Fig. 74. The above diagram shows the wiring and equipment for a simple switchboard with one generator panel and two distribution panels.

breaker, voltmeter, ammeter and shunt, and the shunt field rheostat.

The two feeder panels on the right merely have switches and circuit breakers in each circuit.

Note that the circuit breakers and knife switches are in series in each circuit; so that, when the breaker in any circuit is tripped, there will be no current flowing through the switch.

The coils in series with each pole of the circuit-breakers are the series overload-release coils, which trip the breakers in case of an overload of current.

Note that the voltmeter is connected on the generator side of the main switch, so a reading of the generator voltage can be obtained before the machine is connected to the busses.

Fig. 75 shows a wiring diagram for a switchboard with two generator panels and two sub-panels or feeder panels. A number of feeder panels could be added to either side of this board if necessary.

Equalizer connections are shown for the generators, which are compound and are to be operated in parallel.

The circuit-breaker trip-coils are not shown in this diagram.

Circuits for switchboard instruments and meters which do not require heavy currents, are usually made with No. 12 or No. 14 switchboard wire, which has white colored slow-burning insulation. These wires can be held on the back of the board with small metal clamps and screws.

Examine the wiring and check the locations and connections of the various devices shown in Fig. 75.

86. LOCATION OF METERS AND SWITCHGEAR

Refer again to Fig. 59 and note the positions and arrangement of the various switchgear and devices on the board. Knife switches are usually mounted so their handles come about in the center of the board height, or a little lower, as this height is very convenient for their operation. Watthour and recording meters are frequently mounted along the lower panel-sections, underneath the knife switches.

Voltmeters and ammeters are usually placed above the knife switches, at about eye level or a little above, so they can be easily read.

Circuit-breakers are commonly placed at the top of the board, so any smoke or flame from their arcs cannot reach other instruments or blacken and burn the switchboard.

When air circuit-breakers open under severe overloads or short circuits, they often draw long, hot arcs. The flame, heat, and smoke from these arcs are driven upward by their own heat. Therefore, if meters or instruments were located above the breakers and close to them, they would be likely to be damaged.

Mounting the breakers at the top of the boards also gets them up high enough so operators are not likely to be bumped or burned when the breakers fly open or, as we say, "kick out".

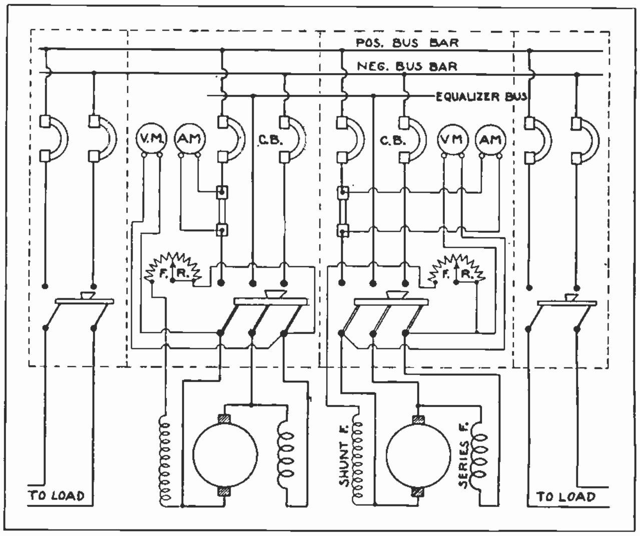

Fig. 75. Wiring diagram for a D. C. switchboard with two main generator panels and two or more feeder panels. Additional feeder panels would be connected to the board and busses the same as the two which are shown. Note carefully the arrangement of all of the parts and circuits shown in this diagram.

DIRECT CURRENT METERS

Electrical meters are devices for accurately measuring the pressure, current, and power in various electrical circuits. There are a great number of types of meters, some of which are used only in laboratory work and others that are more commonly used in every-day work by the practical man.

These latter types are the ones which we will principally consider in this section. The meters most frequently used by electricians and operators are the **voltmeter, ammeter, and wattmeter.** These instruments are made both in portable types and for switchboard mounting.

87. TYPES OF METERS

The portable meters are used for convenient testing of machines and equipment wherever they are located, while the switchboard types are permanently mounted on switchboards for measuring the energy of certain circuits on these boards.

Voltmeters and ammeters are also made in recording types, which keep a record of their various reading throughout certain periods of time.

Wattmeters are divided into two general classes, called **indicating** and **integrating.**

The indicating instrument merely indicates the **power in the circuit** at any instant at which it is read. Integrating wattmeters, or watthour meters as they are commonly called, keep summing up the total amount of energy in kilowatt hours which is used throughout any certain period of their operation.

88. PARTS AND CONSTRUCTION OF D. C. METERS

Most meters operate on magnetic principles or use the magnetic effect of electric currents to produce the movement of the meter needle.

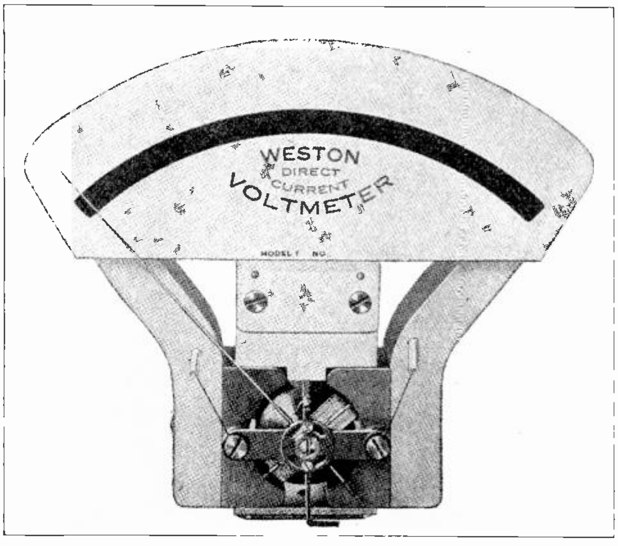

Fig. 76. The above view shows the important parts of a D. C. voltmeter. Note the horse-shoe magnet which provides the magnetic field in which the movable coil rotates. The movable coil with the pointer attached can also be seen between the magnet poles.

Ordinary D. C. voltmeters and ammeters, consist of a permanent magnet of horse-shoe shape which supplies a magnetic flux or field, a delicately balanced coil of fine wire which is rotated in this field, a pointer, scale, and case.

Fig. 76 shows the principal parts of a meter of this type, with the case or cover removed. The poles of the permanent magnet are equipped with pole shoes which have curved faces to distribute the flux evenly over the rotating element. The needle is attached to this rotating or moving element so it will swing across the scale when the coil is rotated. This type of construction is known as the D'Arsonval, because it was first developed by a Frenchman named D'Arsonval.

Fig. 76-A shows a separate view of the moving coil with the needle attached. You will also note the small coil-spring on each end of the moving coil. This coil is usually wound with very fine wire on a light-weight aluminum frame, the shaft of which is then set in jeweled pivots made of first-grade sapphires. These pivots make it possible for the coil to move with an extremely small amount of energy which makes the instrument very sensitive and accurate.

89. OPERATING PRINCIPLES OF D. C. VOLTMETERS AND AMMETERS

The operating principles of meters of this type are very similar to those of a D. C. motor. When a small amount of current is sent through the turns of the moving coil, it sets up around this coil a flux which reacts with the flux of the permanent magnet field and exerts torque to turn the moving coil against the action of the fine coil springs. The coil springs tend to hold the needle, or pointer, in normal or zero position, usually at the left side of the coil.

The greater the current passed through the moving coil, the stronger will be its flux; and the reaction between this flux and that of the permanent magnet will tend to move the needle across the scale, until the magnetic force is balanced by the force of the springs.

The amount of voltage applied to the coil will determine the amount of current flow through it. So the distance that the needle is moved across the scale will be an indication of the amount of voltage or current in the circuit to which the meter is attached.

The same type of meter element can be used for either a voltmeter or ammeter, according to the manner in which the instrument is connected to the circuit to be measured.

The permanent magnets used with good-grade meters are made of the best quality of steel, and are usually aged before they are used in the meters. This aging process leaves them with a certain amount of magnetic strength, which they will retain for very long periods without noticeable weakening.

The pole shoes are made of good-grade soft iron to provide a low reluctance path for the flux of the permanent magnets. An additional stationary core of soft iron is often placed within the rotating coil, merely to provide a better magnetic path between the pole shoes.

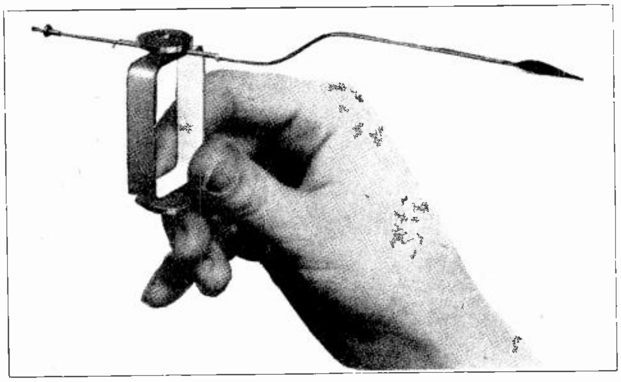

Fig. 76-A. An excellent view of the movable coil, pointer and spring of a D. C. meter.

90. DAMPING OF METER NEEDLES OR POINTERS

As the aluminum coil-frame is rotated through the flux of a meter of this type, small eddy currents are induced in the frame. These tend to set up a **damping** effect which slows or retards the rapid movement of the coil and needle, making the instrument more stable and preventing the needle from vibrating back and forth with small fluctuations in the voltage or current.

Some instruments have a light-weight air-vane attached to the needle, to provide a further damping effect and to prevent the needle from striking against the case at the end of the scale when sudden increases occur in the voltage or current of the circuit.

Small rubber cushions, or "stops", mounted on light, wire springs are usually provided on each side of the needle, to limit its travel and prevent it from striking against the case. These stops can be seen in Fig. 76.

Meter scales are usually printed in black on a white cardboard background, and are located directly behind the pointers, as shown in Fig. 77.

To obtain very accurate readings, some instruments have a mirror strip parallel to the scale and directly behind the pointer. In reading a meter of this type, one should stand in such a position that the pointer covers its own reflection on the mirror. This eliminates viewing the meter from an angle and perhaps reading the voltage or current at a scale line which is not directly under the pointer.

The instrument shown in Fig. 77 is one for switchboard use and is designed to be mounted flush with the surface of the board by setting the case in an opening cut in the switchboard panel. This meter is provided with a marker, or additional black needle with a round head, which can be set in any desired position on the scale by turning the button on the front of the case. This makes it easy to tell when the voltage of the generator or circuit has reached normal value, as the moving needle would then be directly over the marker.

91. CARE AND ADJUSTMENT OF METERS

Because of the delicate construction of the moving coils and the manner in which they are mounted in jeweled bearings, electric meters should be very carefully handled when they are being moved about; because, if they are dropped or severely jarred it may damage the mechanism and cause their readings to be inaccurate. Meters should not be mounted where they are subject to severe vibration or mechanical shocks.

On many meters adjustments are provided by means of which the tension on the coil spring can be regulated by a small screw, thereby correcting any slight inaccuracies in the meter reading. Pivot screws should be kept tight enough to prevent too much end play of the shaft and coil, but never tight enough to keep the coil from moving freely.

92. VOLTMETERS

When meter elements of the type just described are used for voltmeters, the moving coil is connected in parallel, or across the positive and negative wires of the circuit on which the voltage is to be measured.

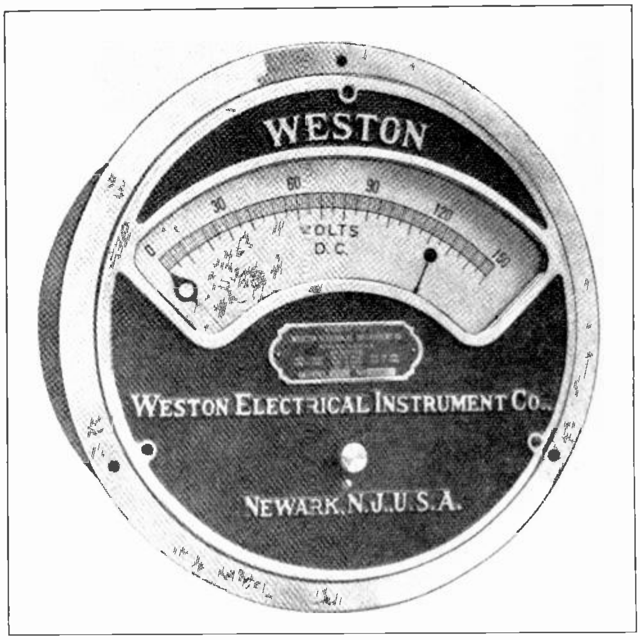

Fig. 77. Switchboard type voltmeter for mounting flush with the surface of the board. Note the stationary index pointer or marker, to indicate when full voltage is reached by the movable pointer.

It is difficult to wind a sufficient number of turns on the moving coil to have high enough resistance to stand the full line voltage on ordinary power and light circuits. For this reason, special resistance coils are connected in series with the moving coil element and the meter terminals, as shown in Fig. 78.

These resistance coils limit the current flow through the meter to a very small fraction of an ampere, and thereby allow the meter element to be constructed of light weight and as delicately balanced as required for accuracy. Voltmeter resistance coils can be located either inside the case or outside. Portable instruments usually have them located within the case, while with switchboard instruments the resistance coils are sometimes mounted on the back of the switchboard behind the instrument.

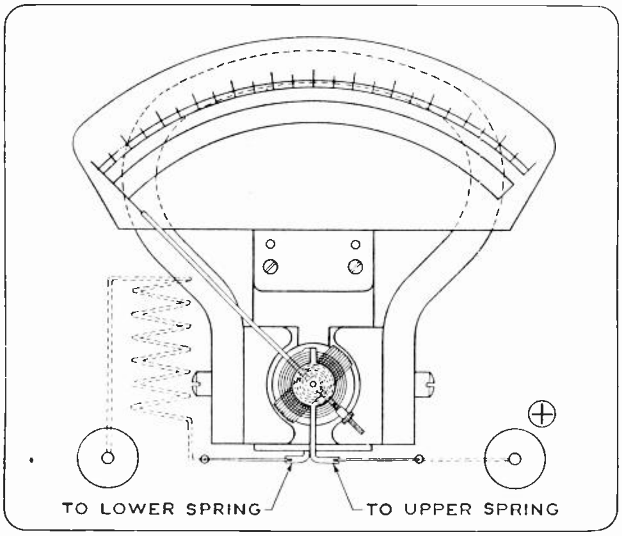

Fig. 78. This diagram shows the parts also the connections for a D. C. voltmeter.

By changing the number of these coils in series, or by changing their size and resistance, we can often adapt the same meter element for use on circuits of different voltages. When a meter is changed in this manner to operate on a different voltage, a different scale will probably also be required.

Fig. 79 shows a view of the inside of a voltmeter in which are mounted four resistance coils that are connected in series with a meter element.

Fig. 80 shows two types of external voltmeter resistance coils that can be used for mounting on the rear of the boards with voltmeters for switchboard use. With these resistance coils in series with the voltmeter element, it requires only a few milli-volts across the terminals of the moving coil itself to send through it enough current to operate the meter. Therefore, when the instrument is used without the resistance coils it can be connected directly to very low voltage circuits of one volt or less, and used as a milli-volt meter.

Whether it is used with or without the resistance coils, the strength of the flux of the moving coil and the amount of movement of the needle will depend entirely upon the voltage applied, because the current through the coil is directly proportional to this voltage.

Any type of voltmeter, whether for portable or switchboard use, **should always be connected across the circuit,** as shown in Fig. 81 at "A".

93. AMMETERS AND AMMETER SHUNTS

The construction and parts of an ordinary D.C. ammeter are the same as those of the voltmeter. When the instrument is used as an ammeter, the terminals of the moving coil are connected in parallel with an ammeter shunt, and this shunt is connected in series with the one side of the circuit to be measured, as shown in Fig. 81-B.

The ammeter shunt is simply a piece of low resistance metal, the resistance of which has a fixed relation to that of the ammeter coil. The load current in flowing through this shunt causes a voltage drop of just a few milli-volts and this is the voltage applied to the terminals of the ammeter coil.

In other words, the meter element simply measures the milli-volt drop across the shunt; but, as this drop is always proportional to the current flowing through the shunt, the meter can be made so that the load in amperes can be read directly from the meter scale.

This principle can be explained by another method, as follows: We know that electric current will always divide through any number of parallel paths which it is given. As the ammeter shunt is connected in parallel with the instrument coil and is of much lower resistance than this coil, the greater part of the load current passes through the shunt, and only a very small fraction of the current flows through the meter coil.

The use of a shunt in this manner eliminates the necessity of constructing meter coils large enough to carry the load current. This would be practically impossible on meters of this style for heavy duty circuits.

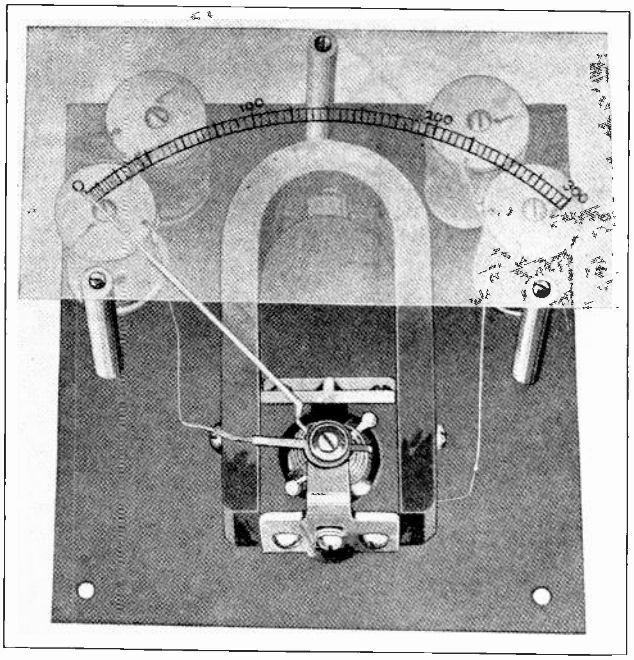

Fig. 79. The above view shows a D. C. voltmeter of a slightly different type, with the case removed to show the resistance coils which are connected in series with the movable element.

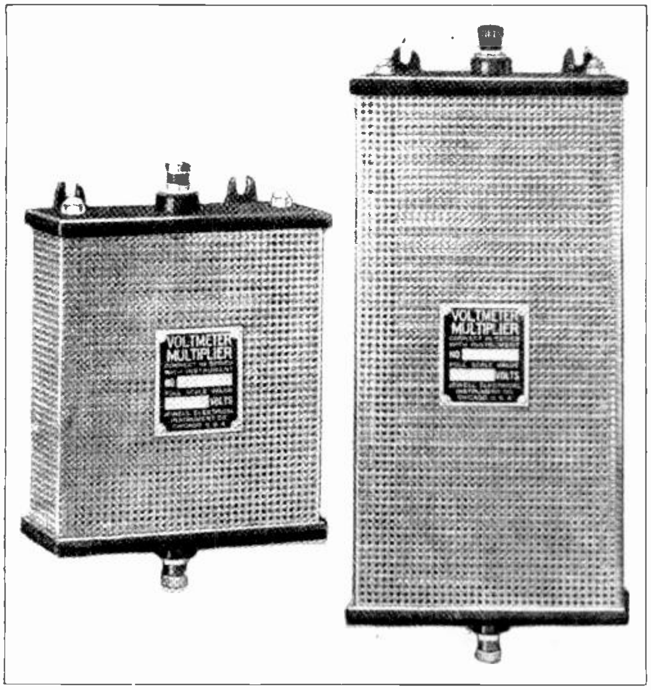

Fig. 80. External resistors for use with voltmeters and wattmeters. Resistors of this type are to be mounted outside the meter case, and usually on the rear of the switchboard

Ammeter shunts for portable instruments are usually mounted inside the instrument case; and for switchboard instruments on heavy power circuits, the shunt is usually mounted on the rear of the switchboard.

To obtain accurate readings on the meters, ammeter shunts should be made of material the resistance of which will not change materially with ordinary changes in temperature, as the shunt may become heated to a certain extent by the flow of the load current through it. The material commonly used for these shunts is an alloy of copper, manganese, and nickle, and is called "manganin". This alloy has a temperature co-efficient of almost zero; in other words, its resistance doesn't vary any appreciable amount with changes in its temperature. Manganin is used also because it doesn't develop thermo-electric currents from its contact with the copper terminals at its ends.

Ammeter shunts for use with D.C. ammeters are made in sizes up to several thousand amperes capacity. Fig. 82 shows several sizes and types of these shunts. Note the manner in which the strips of alloy are assembled in parallel between the bus connector stubs. This allows air circulation through the shunt to cool it.

94. CONNECTION OF AMMETERS AND SHUNTS

Remember that **ammeter shunts or ammeters must always be connected in series with the line** and **never in parallel.** The resistance of these devices is very low and if they were connected in parallel across positive and negative wires of a circuit, it would produce a severe short circuit, which on heavy circuits would be dangerous to the person connecting the meter and would at least blow the fuse and kick out circuit breakers. It would also probably burn out the meter or destroy the shunt.

Fig. 83 shows a common type of portable meter, such as is used in testing various electrical machines and circuits. The protective case and convenient carrying handle make these instruments very handy for use on the job. Voltmeters, ammeters, and wattmeters of this type are very essential in any plant where a large number of electric machines are to be maintained.

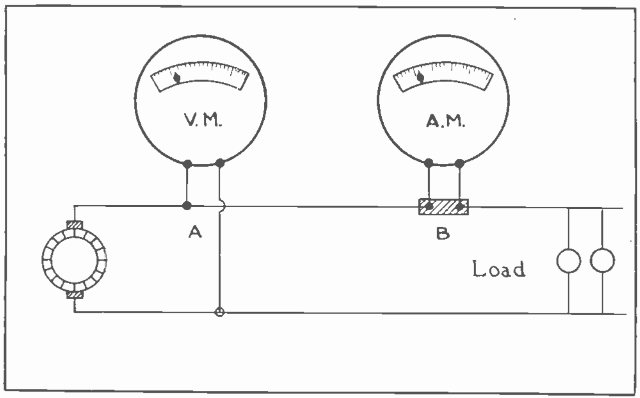

Fig. 81. This diagram shows the proper methods of connecting voltmeters and ammeters to electric circuits. Note carefully the manner of connecting voltmeters in parallel with the line and ammeters or their shunts in series with the line.

Testing the voltage and current of motors of different sizes will often disclose an overload or defective condition in time to prevent a complete burnout or serious damage to the machine windings.

Some portable instruments have two separate elements in the case and two separate scales, one for a voltmeter and one for an ammeter. Portable instruments of this type are very convenient for tests, but extreme care must be used to **be sure to connect the voltmeter terminals in parallel** and the **ammeter terminals in series** with any circuit to be tested.

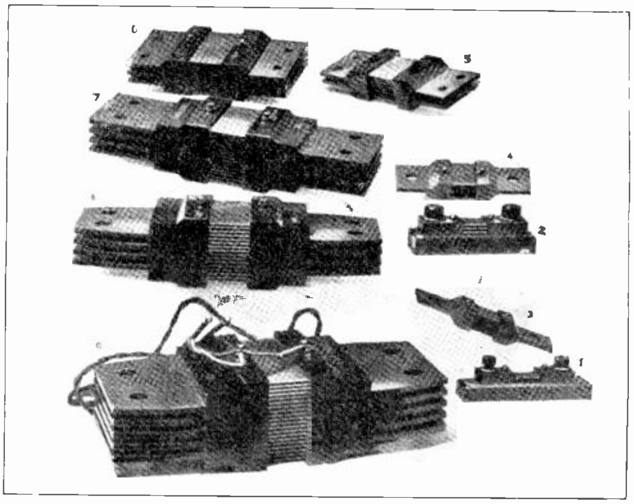

Fig. 82. The above photo shows several sizes and types of ammeter shunts which are generally used with ammeters where heavy loads are to be measured.

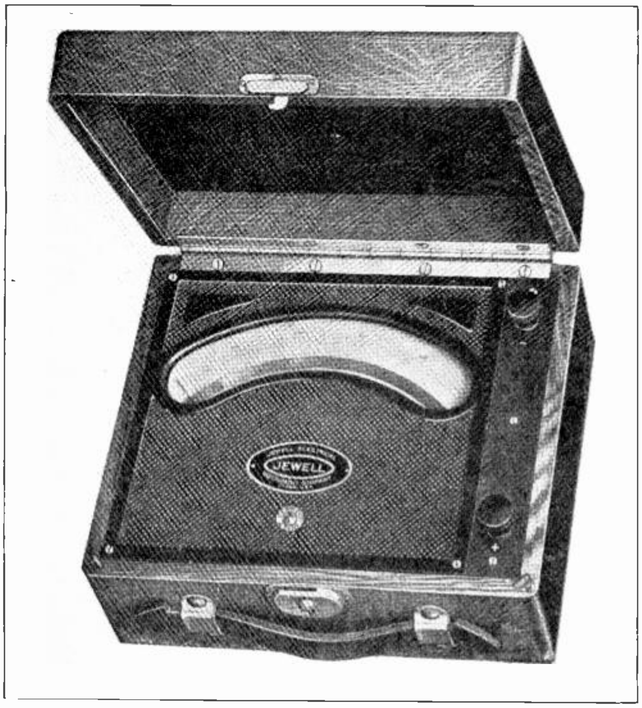

Fig. 83. Portable meters of the above type are very convenient and necessary devices for the practical electrician to use in testing various machines and circuits.

D. C. meters must be connected to the line with the proper polarity, and their terminals are usually marked "positive" and "negative", as shown in Fig. 84. If meters of this type are connected to the line with wrong polarity, the needle will tend to read backwards and will be forced against the zero end of the scale.

The meter shown in Fig. 84 is another type of switchboard meter for surface mounting. This instrument doesn't require cutting any opening in the switchboard panel, since the meter is mounted flat against the front surface of the panel.

Fig. 85 shows another type of switchboard meter commonly used in power plants. Meters of this style often have the scale illuminated by electric lamps placed behind it. This makes the meter easier to read when the operator is some distance away, or working at the other end of the switchboard.

These meters are often mounted on a hinged bracket at the end of the switchboard so that they can be seen from any point along the board.

95. INDICATING WATTMETERS

Wattmeters, as previously mentioned, are used for measuring the power of circuits in watts. As this power is proportional to both the voltage and amperage of the circuit, wattmeters use two coils, one of which is known as the voltage or **potential** element, and the other as the **current** element.

The potential element is connected across the line, similarly to a voltmeter coil; while **the current element is connected in series with one side of the line,** similarly to an ammeter coil.

A diagram of the internal wiring and the connections of a wattmeter is shown in Fig. 86.

The potential coil is the movable element and is wound with very fine wire and connected in series with resistance coils, similarly to those used in the voltmeter. As this coil is connected across the line, the strength of its flux will always be proportional to the line voltage.

The current element is stationary and consists of a few turns of larger wire. As this coil is connected in series with the line, its strength will be proportional to the load and the current which is flowing. This current element supplies the field and takes the place of the permanent magnet used in voltmeters and ammeters.

As the turning effort, or torque, exerted on the movable coil is the result of reaction between its flux and the flux of the current element, the pointer movement will always be proportional to the product of these two fields and will, therefore, read the power in watts directly from the scale.

The coils of these instruments are not wound on iron cores but are wound on non-magnetic spools or in some cases the wires are stiff enough to hold their own shape in the coils. Wattmeters of this same design can be used on either D.C. or A.C., as they will read correctly on A.C. circuits if the reactances of both the moving and stationary coils are equal.

Wattmeters are designed for different amounts of voltage and current and should never be used on circuits with a greater amount of power in watts than they are rated for, nor circuits with higher voltage or heavier currents than the instruments are designed for.

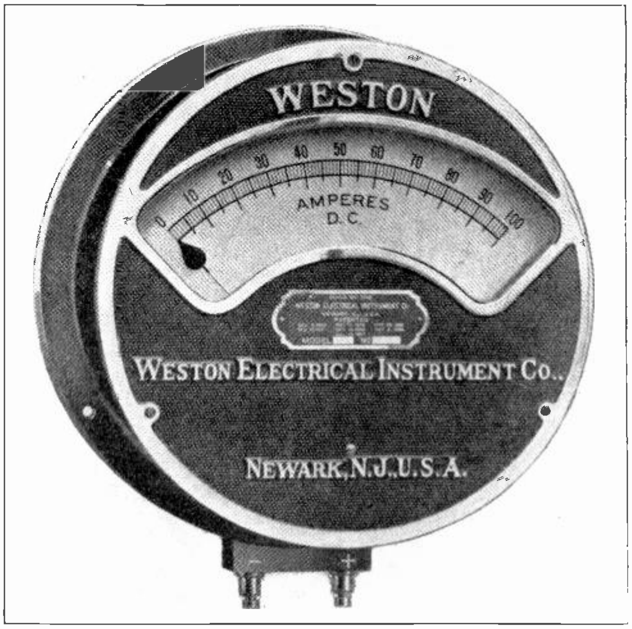

Fig. 84. Switchboard type ammeter for surface mounting. This meter does not require any large opening to be cut in the switchboard panel.

The terminals for the potential and current elements can be distinguished by their size, as those of the current element are usually much larger than those of the potential element. Extreme care should be used never to connect these in the wrong relation to the circuit, because if the current coil is connected across the line, a short circuit will result.

Fig. 87 shows the internal construction of a D.C. wattmeter. In this view the current coils, consisting of a few turns of heavy wire, can be plainly seen. The potential coil cannot be seen, however, as it is inside of the current coil.

96. WATTHOUR METERS

The common type of meter used in homes, factories, and power plants for measuring in kilowatt hours the total amount of power used during any certain period, is known as a **watthour** meter.

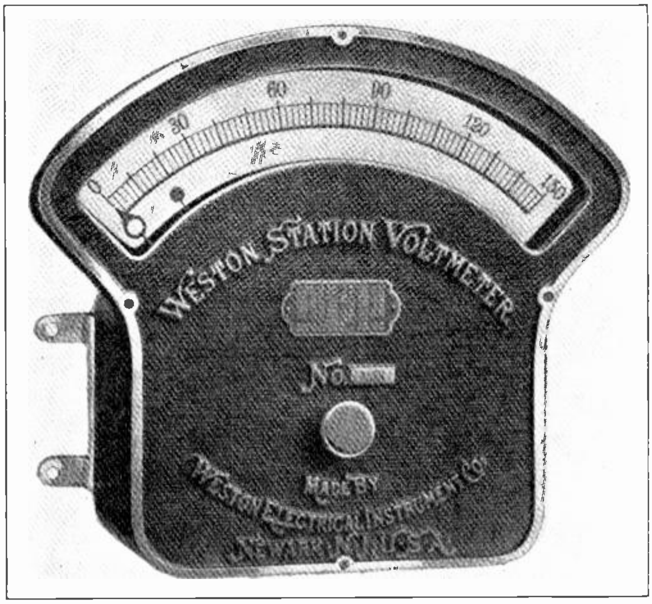

Fig. 85. The above view shows a large voltmeter of the type commonly used on power plant switchboards. The scale of these meters can be illuminated with lamps placed behind them so the meter can be read from any place along the board.

These meters have a current and potential element somewhat similar to those in the indicating wattmeter. The potential element, however, is allowed to revolve continuously, like the armature of a D. C. motor, as long as there is any load on the circuit line to which the meter is attached.

This element is not limited to a fraction of a turn by the coil springs, as in the case of indicating meters, but is mounted on a vertical shaft set in jeweled bearings and is free to revolve completely around, with the application of very small torque.

This rotating element is connected to a series of gears which operate the hands or pointers on the clock-like dials of these instruments. The current element consists of a few turns of large wire and is connected in series with the line, or in parallel with an ammeter shunt which is connected in series with the line. This stationary current coil provides a magnetic field similar to that of a D.C. motor, and in which the potential coil or armature element rotates.

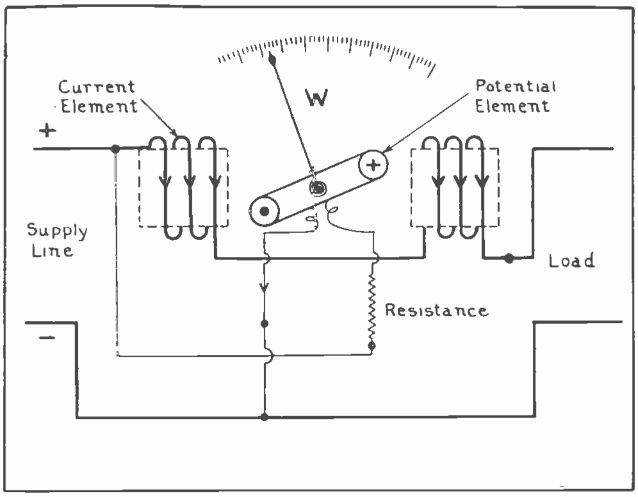

Fig. 86. This diagram shows the potential and current coils of a wattmeter. Note the manner in which each of these elements are connected in the circuit. The movable coil is shown in a sectional view so you can observe the direction of current through its turns and note how the flux of this movable coil will react with that of the current coils and cause the pointer to move.

97. PRINCIPLES OF WATTHOUR METERS

The potential element, being connected across the positive and negative leads of the line, is always excited and has a very small current flowing through it as long as it is connected to the circuit. This coil usually has additional resistance coils placed in series with it, to limit the current flow to a very small value. Therefore it doesn't waste any appreciable amount of current by being permanently connected across the line.

As long as no load current is flowing through the line and the current element of the meter, there is no field flux for the flux of the potential coil to react with, and so it doesn't turn. As soon as load is applied to the line and current starts to flow through the stationary coils, it sets up a field which reacts with that of the potential coil, causing the latter to start to turn.

The greater the load of current, the stronger will

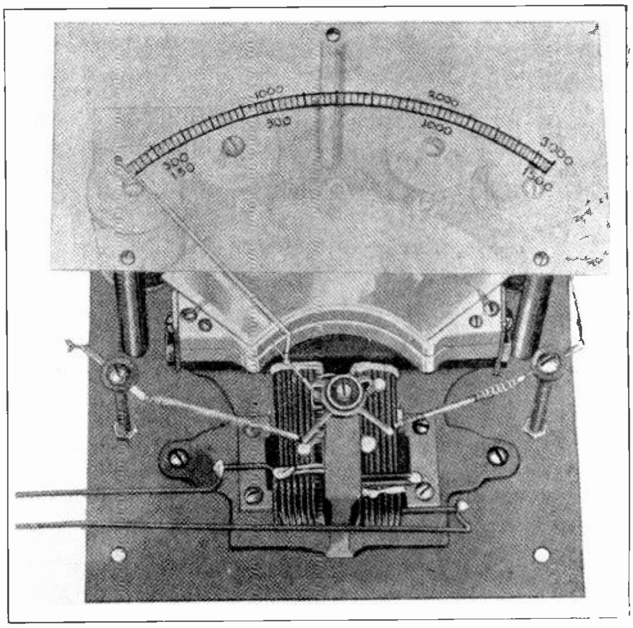

Fig. 87. This view shows the current coils, resistor coils, and general construction of a common type wattmeter.

be this field and the faster will be the rotation of the potential element or armature. This will cause the pointers on the dials to revolve faster and total up power more rapidly. The longer the load is left on the circuit, the farther these pointers will be revolved and the greater will be the total power reading.

98. CONSTRUCTION OF POTENTIAL AND CURRENT COILS

Fig. 88 shows three views of the armature or potential element of a watthour meter, both partly wound and completely wound. The coils of fine wire are wound on a drum or hollow ball of light weight non-magnetic material and are held in place by a coating of insulating compound. You will note that they are wound similarly to the coils of a simple D.C. motor armature. The leads of the coils are brought up to a very small commutator located on the top end of the shaft at the right.

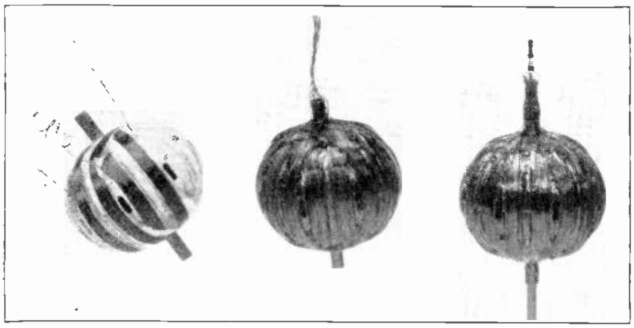

Fig 88. The above photo shows several potential or armature coils of watthour meters and illustrates the manner in which they are wound.

Fig. 89 shows both the current coils and potential coil of a watthour meter. The current coils are wound of heavy copper strip and are each divided in two sections. They are mounted close to the potential or rotating element, which can be seen just inside of them. You will note at the top of this figure the very small metal brushes mounted on wire springs and in contact with the small commutator to which the leads of the potential element are attached. Directly above this commutator is the small wormgear which drives the series of small gears that operate the dials. The brushes of the meter are connected in series with the proper resistance coils and then across the line wires, and they complete the circuit through the potential element. or armature, of the meter.

These brushes are commonly made of silver or some very good conducting material, in order to prevent resistance and voltage drop at the brush contact with the commutator.

99. DAMPING DISK AND MAGNETS

The speed at which the armature of the watthour meter will rotate depends upon the voltage applied to the potential element and the current flowing through the current element. Because of the very slow speed at which this armature revolves, its speed is not regulated by counter-E.M.F., as armatures of direct current motors are.

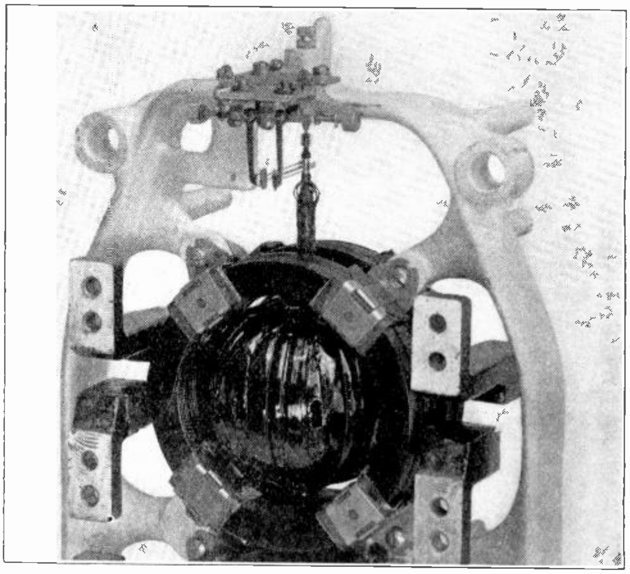

Fig. 89. This view shows the potential and current coils and also the commutator and brushes of a watthour meter.

In order to prevent over-speeding and to make the driving torque remain proportional to the power applied, the motor armature must have some damping or retarding effect to oppose the torque exerted by the magnetic fields. This counter-torque is obtained by mounting a thin aluminum disk upon the lower end of the armature shaft, and allowing it to rotate in the field of several permanent magnets of horse-shoe type. This disk and the damping magnets can be seen in the lower part of the meter, shown in Fig. 90 with the cover removed.

As the aluminum disk is rotated, it cuts through the lines of force from the magnet poles and this generates eddy currents in the disk. The reaction between the flux of these eddy currents and that of the magnets tends to oppose rotation, just as placing a load upon a generator will produce counter-torque and require effort from the prime mover to turn it.

The induced eddy currents will be proportional to the speed of rotation of the disk and, as the flux of the permanent magnets is constant, the counter-torque exerted by the disk will be proportional to the product of the flux from these eddy currents and that from the permanent magnets.

When the load on the meter is increased, the speed of its armature increases, until the counter-torque developed by the disk just balances the torque exerted by the armature. In this manner, the armature speed is maintained proportional to whatever load is applied to the meter, causing the pointers on the dials to read the correct power in kilowatt hours.

This type of meter is often referred to as a watthour meter, but the gears and speed are so adjusted and of the proper ratio so that the readings will be in kilowatt hours.

100. ADJUSTING DAMPING EFFECT

The amount of damping effect produced by the disk can be adjusted by moving the poles of the permanent magnets in or out along the disk. If the poles are moved closer to the outer edge of the disk where it will cut their flux at higher speed, a greater amount of eddy current will be induced and cause a greater damping effect, and if the magnet poles are moved closer to the shaft where the disk is traveling at lower speed, the induced eddy currents will be less, and the damping effect will be reduced.

101. COMPENSATING COIL

No matter how carefully the armature of a meter of this type may be mounted, there is always a slight amount of friction to offer resistance to its rotation. Some of the energy produced by the meter coils will be required to overcome this friction and the friction of the gears on the dials.

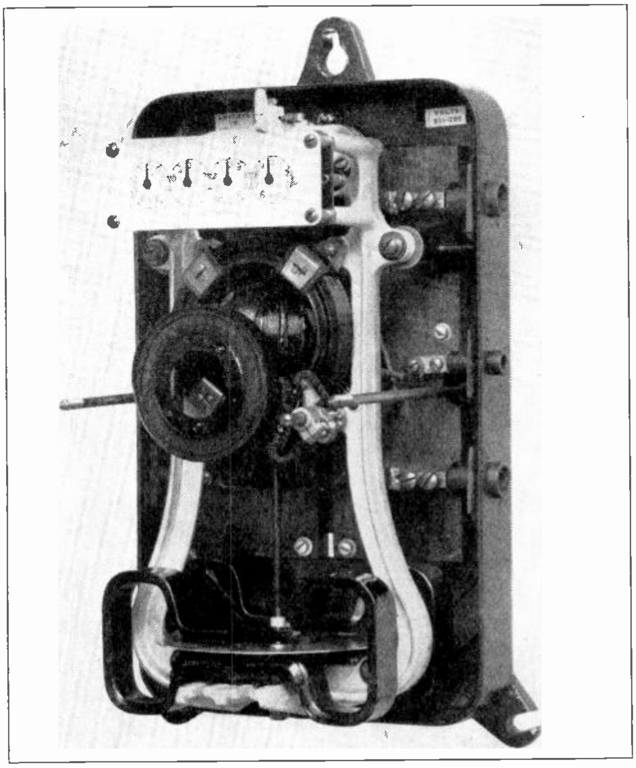

Fig. 90. Complete view of a KW-hour meter with the cover removed clearly showing the dials, current and potential coils, compensating coil, damping disk, and drag magnets.

In order to make a meter register accurately on light loads, this friction should be compensated for. This is done by means of a coil consisting of many turns of fine wire, connected in series with the armature or voltage coil of the meter. This **compensating coil** is mounted on an adjustable bracket in a position where its flux will react with that of the potential and current coils.

This coil can be seen in front of the current coils and armature of the meter shown in Fig. 90. By having this coil adjustable, it can be moved closer to or farther from the meter coils and its effect can be accurately adjusted so it will just compensate for the friction, and no more.

Sometimes these coils have a number of taps provided at various sections of the winding and also a small switch to shift the connections to include more or less of the turns of the coil. This also provides an adjustment of the amount of torque the coil will exert to overcome friction.

Fig. 91 shows the coils and connections of a D.C. kilowatt-hour meter. You will note in this figure that the friction compensating coil is connected in series with the armature and resistance coil, and this group are connected across the positive and negative line wires.

Current coils are connected in series with one side of the line so they will carry the full load current. The terminals of a watthour meter of this type are usually marked for the line and load connections, and these connections must, of course, be properly made so that the meter will run in the right direction.

102. WATT-HOUR CONSTANT AND TIME ELEMENT

A given amount of power in watts must pass through a watthour meter to produce one revolution of the armature and disk. For example, it may require a flow of energy representing 6 watt-hours, or the equivalent of 6 watts for one hour, to produce one revolution of the meter armature. This amount would be termed the **watthour constant** of the meter.

Knowing the number of watts per revolution, it only remains to get the total number of revolutions during a certain period of time, in order to know or measure the total amount of energy passed through the meter during that time. As each revolution of the armature is transmitted to the gears which operate the pointers on the dials, the total power in kilowatt hours can be read directly from these dials.

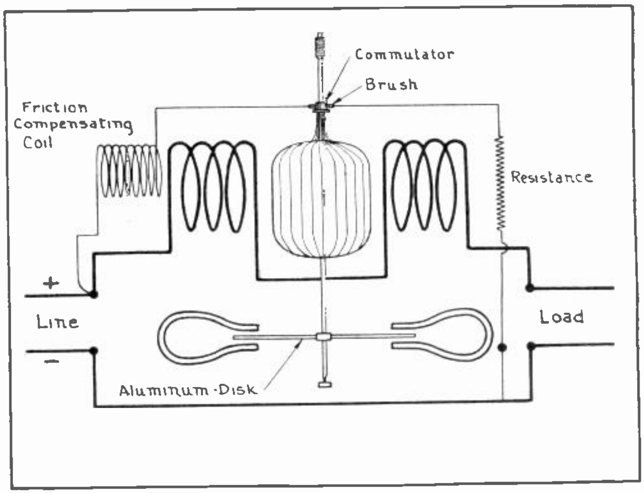

Fig. 91. This diagram shows the coils and circuits of a KW-hour meter and the manner in which they are connected to the line and load.

The operation of the gears and dials or registering mechanism is very simple. The worm-gear on the upper end of the armature shaft is meshed with the teeth of a gear which is the first of a row or chain of gears all coupled together. This gear has attached to it a small pinion which meshes with the teeth of the next gear and drives it at $\frac{1}{10}$ the speed of the first one. This second gear, in turn, drives the third gear 1/10 as fast as it runs, and the third drives a fourth, the speed of which is again reduced to ten times lower than the third one.

Referring to Fig. 90, when the pointer on the right has made one complete revolution, the pointer on the next dial to the left will have travelled just one division or one-tenth of a revolution.

When the first pointer has made ten revolutions, the second one will have completed one revolution, and the third pointer will have moved one point. When the first pointer completes 100 revolutions, the second will have completed 10; and the third will have completed one revolution.

In this manner the first dial will have to make 1000 revolutions to cause the left-hand dial to complete one revolution.

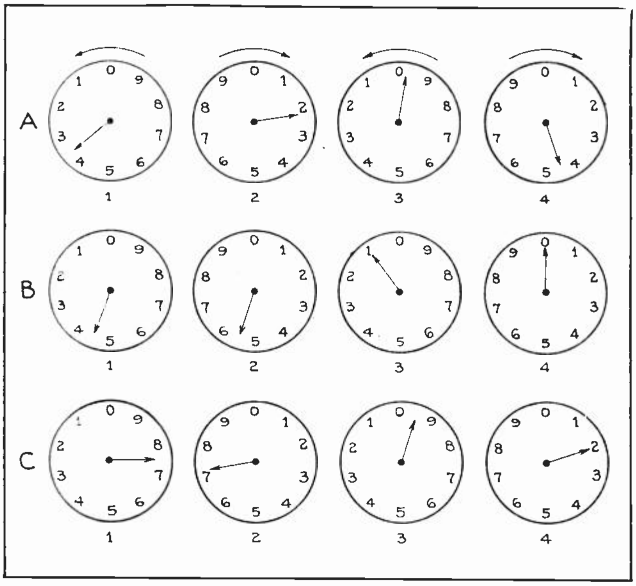

Fig. 92. The above sketches, A, B, C, show the dials of a kilowatt-hour meter in three different positions. If you will practice reading each set of these dials with the instructions here given, you will be able to easily and accurately read any KW-hour meter.

103. READING WATTHOUR METERS

By noting the figures at which the pointers stand, in rotation from left to right, we can read the kilowatt hours indicated by the meter. Some meters used on larger power circuits are adjusted so that their dials and pointers don't show the amount of power directly, but provide a reading which must be multiplied by some certain figure, such as 10, 20, or 50, to obtain the correct total reading. This figure is called a **constant** or **multiplier,** and it should be used whenever reading a meter of this type. This constant, or multiplier, is usually marked beneath the dials of the meter.

When reading kilowatt-hour meters, we should always read the last number which has been passed by the pointer on any dial. Some care is required in doing this until one has had enough practice to do it automatically. If each dial is not carefully observed, mistakes will be made; because each adjacent pointer revolves in the opposite direction to the last, as can be seen by the numbers marked on the dials shown in Fig. 92-A.

When the pointer is almost directly over one of the numbers, there may be a question as to whether the pointer has actually passed this number or is still approaching it. This should always be determined by referring to the next dial to the right to see whether or not its pointer has completed its revolution. If it has completed the revolution or passed zero on its dial, the pointer to the left should be read as having passed its number.

If the pointer to the right has not completed its last revolution, the one next to the left should not be read as having passed its number, even though it may appear to be beyond the number.

If the readings are carefully checked in this manner there is very little chance of mistakes.

On the second dial from the left in Fig. 92-A, the pointer revolves in a clockwise direction, and it might easily appear that it has passed the No. 2. By checking with the dial next to the right, however, we find that this pointer, which revolves counter-clockwise, has not quite completed its revolution or passed zero. Therefore, the dial at the left should still be read as No. 1. The correct reading for a meter with the pointers in the position shown in Fig. 92-A would be 3194 kilowatt hours.

The reading for the pointers in Fig. 92-B should be 4510 kilowatt hours. Here again the pointer on dial No. 3 appears to be on figure No. 1; and, by checking with dial No. 4, we find that its pointer is on zero or has just completed a revolution; so it is correct to read dial No. 3 as figure No. 1.

The reading for the set of dials in Fig. 92-C should be 7692. The pointer on dial No. 2 in this case appears to have passed No. 7; but, by checking with dial No. 3 to the right, we find its pointer has not quite completed its revolution; therefore, the dial to the left should be read as No. 6.

104. "CREEPING"

The armature of a watthour meter will sometimes be found to be rotating slowly, even when all load is disconnected from the circuit. This is commonly called **creeping** of the meter. It may be caused by a high resistance ground or a short on the line. The resistance of such a ground or short may not be low enough to cause the fuse to blow, and yet there may be a small amount of current flowing through it at all times.

If the load wires are entirely disconnected from the meter and the disk is still creeping, it may be due to the effects of stray magnetic fields from large conductors which are located near the meter and carrying heavy currents, or it may be caused by the fields from large electrical machines located near by.

For this reason, watthour meters, or for that matter any other electric meters, should not be located within a few feet of large machines, and should be kept at least a few inches away from large conductors carrying heavy currents.

Large bus bars or cables carrying currents of several hundred or several thousand amperes set up quite strong magnetic fields around them for distances of several feet, and very strong fields a few inches away from them.

Sometimes a very small load such as a bell transformer or electric clock may cause the meter to rotate very slowly, but this is actual load and not creeping.

Vibration of the building or panel to which the meter is attached may sometimes be the cause of creeping. In some cases this may be stopped by proper adjustment of the compensating coil; or a small iron clip can be placed on the edge of the aluminum disk, if the clip does not rub the damping magnets as the disk revolves.

When this iron clip comes under the poles of the permanent magnets, their attraction for the iron will stop the disk and prevent it from creeping. As long as this clip doesn't touch the permanent magnets, it will not interfere with the accuracy of the meter; because its retarding effect when leaving the poles of the magnets is balanced by its accelerating effect when approaching the poles.

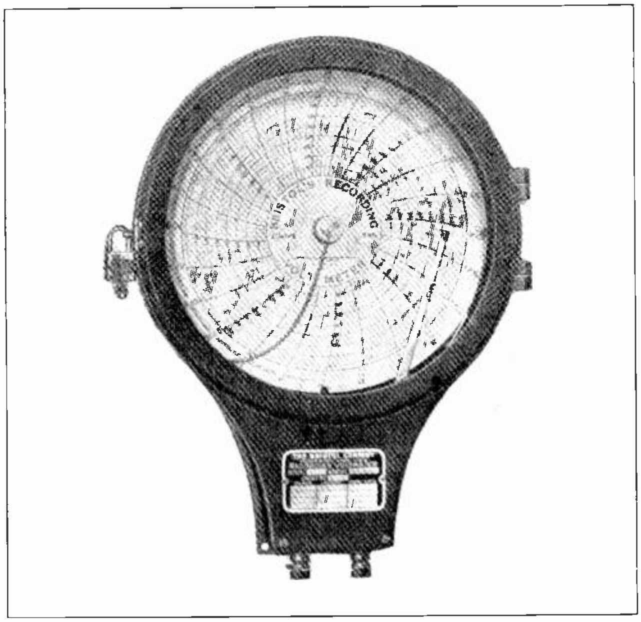

Fig. 93. Common type of recording voltmeter used for keeping an hourly and daily record of the voltages on the system to which it is attached.

105. TESTING KILOWATT-HOUR METERS

Kilowatt-hour meters can be tested for accuracy, or calibrated, by comparison with standard portable test instruments.

A known load consisting of a resistance box can be connected to the load terminals of the meter when all other load is off. Then, by counting the revolutions per min. of the disk and comparing this number with the revolutions made by the disk of a "rotating standard" test instrument, the accuracy of the meter can be determined.

When no standard load box or test instrument is available, a test can be conveniently made with a known load of several lamps or some device of which the wattage is known.

For this test the following formula should be used:

$$\frac{\text{WHK} \times 3600 \times \text{R}}{\text{W}} = \text{seconds}$$

In which:

WHK = the watt-hour constant marked on the meter disk.

3600 = number of seconds in an hour.

R = any chosen number of revolutions of the disk.

W = known load in watts which is connected to the meter.

For example, suppose we wish to test a meter which has a constant of .6, marked on its disk. We can connect a new 200-watt lamp, or two 100-watt lamps across the load terminals of the meter, after all other load has been disconnected. At the instant the lamp load is connected, start counting the revolutions of the meter and observe accurately the amount of time it requires to make a certain number of revolutions. Let us say it is 5 revolutions.

Then, according to the formula, the time required for the disk to make these 5 revolutions should be:

$$\frac{.6 \times 3600 \times 5}{200}, \text{ or 54 seconds}$$

If it actually requires longer than this, the meter is running too slow. If the time required to make the 5 revolutions is less than 54 sec., the meter is running too fast.

Remember where this formula is in this Reference Set, as it may often be very convenient to use.

106. RECORDING INSTRUMENTS

In power plants or substations where large amounts of power are generated and handled, it is often very important to keep accurate records of the voltage, current, and power on principal circuits at all hours of the day and night.

Records of this kind will show any unusual variations in load or voltage and they are often the means of effecting great savings and improvements in the operation of power plants and industrial electric machinery.

It is usually not practical for an operator or electrician to keep constant watch of meters to obtain a record of their readings hourly or more often. Recording meters which will mark a continuous record of their readings on a paper chart or disk can be used for this purpose.

107. DIRECT-ACTING RECORDING METERS

One of the simplest types of recording instruments uses the ordinary meter element and has a case quite similar to that used for D. C. voltmeters or ammeters, and has a small ink cup and pen attached to the end of the needle or pointer. This pen rests lightly on a paper disk which is rotated once around every 24 hrs. by a clock-work mechanism inside the meter. See Fig. 93.

As the disk slowly revolves, the pointer pen traces on it a line which shows the movements of the pointer and the variations in voltage or current, whichever the instrument is used to measure.

The paper disks have on them circular lines which represent the voltage or current scale. By the position of the ink line on this scale the voltage or amperage at any point can be determined. Around the outer edge of the disk is marked the time in hours, so the readings for any period of the day can be quickly determined. Fig. 94 shows a disk from a meter of this type.

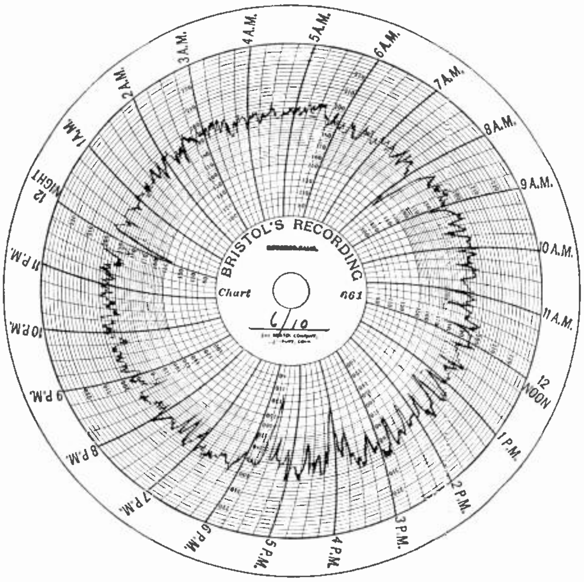

Fig. 94. Paper disk or chart from a direct acting recording meter. The irregular black line shows the voltage curve traced by the pointer and pen throughout each hour of the day and night.

Recording meters of the type just described are called **Direct-Acting** instruments. One of the disadvantages of meters of this type is that the friction of the pen on the paper chart does not allow the pointer and pen to move freely enough to make the meter very sensitive or accurate on small variations in the voltage or current. They also require frequent winding, replacing of charts, and refilling of the pen, but they are low in cost and very satisfactory for certain requirements.

108. RELAY TYPE RECORDING METERS

Another type of recording instrument in very common use is the **Relay Type,** which operates on the electro-dynamometer, or Kelvin balance, principle.

The Kelvin balance consists of a set of stationary coils and a set of movable coils. These coils can be seen at the top of the instrument shown in Fig. 95, which is a relay-type recording meter.

The thin moving coils are shown balanced between the larger stationary coils, and are equipped with a torsion spring which tends to oppose their movement in either direction.

Any change of voltage or current in these coils changes the repulsion or attraction between the fields of the moving and stationary elements, and will force the coils of the moving element up or down. This moving element then operates a set of relay contacts which close a circuit to the solenoids or small operating motor which moves the pen.

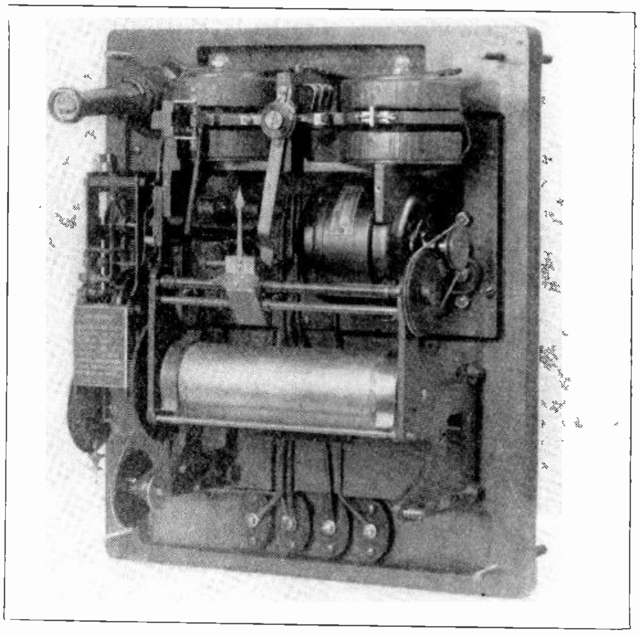

Fig. 95. This photo shows a complete recording instrument of the relay type with the cover removed. Note the stationary coils and balance coils at the top, and the roll for carrying the paper chart beneath the pointer.

The instrument shown in Fig. 95 uses a motor for the operation of the pen and pointer. The motor, which can be seen above the chart roll, revolves a worm shaft which moves the pen. The movement of the pen also readjusts the counter-torque spring on the movable coil so that it is balanced properly for the new position of the pen. This causes the balance coils to open the relay contacts and stop the motor; so the pen will remain in this position until another change of the voltage or current occurs.

The "clock" mechanism which drives the paper chart in this type of instrument is electrically wound and therefore does not require frequent attention.

Fig. 96 shows a recording instrument of this type, with the chart roll in place. This paper chart is continuous throughout the roll. So, as the roll travels and the pen moves sidewise across it, a continuous record of the voltage or power is kept. When the end of one roll is reached, a new one can be inserted.

Fig. 97 shows the connections for a recording meter of the type just described. Terminals 1 and 2 are for the meter circuit, and 3 and 4 are for the control circuit.

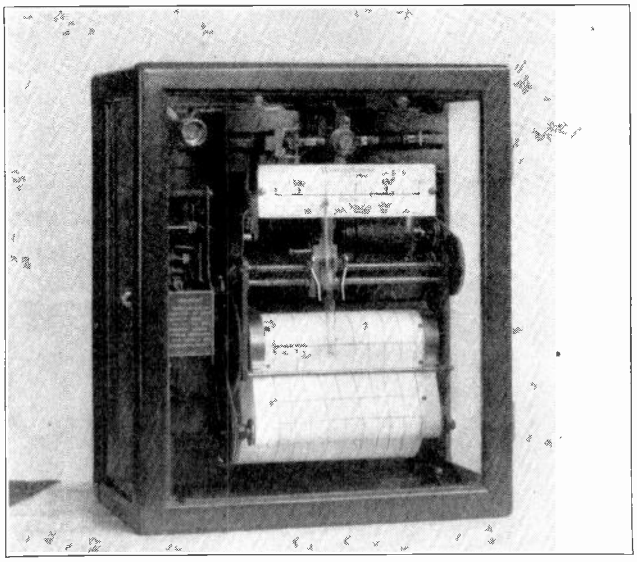

Fig. 96. This view shows the recording instrument which was shown in Fig. 95, with the paper chart in place. The glass ink cup and pen can be dimly seen attached to the lower part of the pointer.

109. LOAD DEMAND INDICATORS

Power and lighting loads which are of a steady or constant nature and do not vary greatly throughout the day are most desirable to power companies. Loads which have high "peaks" in proportion to the average hourly load, require the operation and maintenance of generating equipment which is sufficient for these peak periods, and may be either idle or lightly loaded at other periods. This tends to reduce the operating efficiency and economy in the power plant, and power companies will often give a customer lower rates per KW hr, on his power if his peak load is not over a certain percentage higher than his average load.

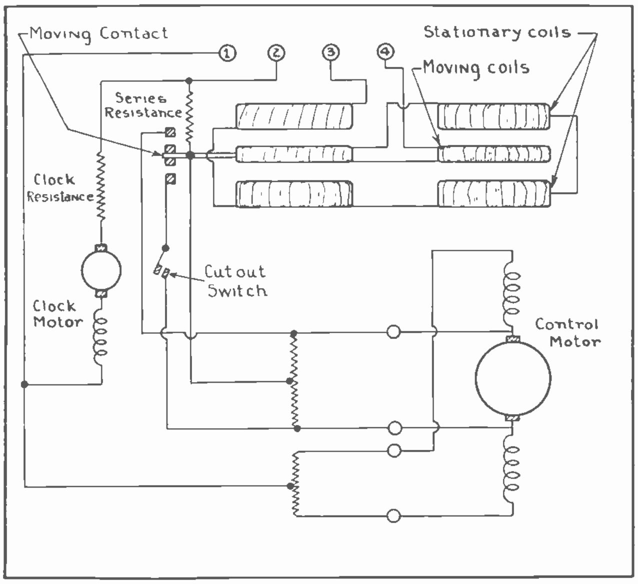

Fig. 97. This diagram shows the coils and winding of a recording meter such as shown in Figs. 95 and 96.

To determine the maximum load, or peak, for any period during the day or week, **Maximum Demand Indicators** are used. They are sometimes called "max. meters".

One of the common types of demand indicators is the Wright maximum ampere-demand indicator, which operates on the thermal or heat expansion principle.

This instrument consists of a specially shaped sealed glass tube, as shown in Fig. 98. In this tube is sealed a certain amount of colored liquid, usually sulphuric acid, and a certain amount of air.

A resistance coil of platinoid metal is wound around the bulb as shown at "A" in the figure. This coil is connected in series with the line and load, or in parallel with an ammeter shunt. When current passes through the coil it causes it to become slightly heated and this heat expands the air in the bulb "A".

This expansion increases the air pressure and forces more of the liquid over into the right-hand part of the tube. If the liquid is forced high enough in this tube, some of it will run over into the small **Index Tube,** "C".

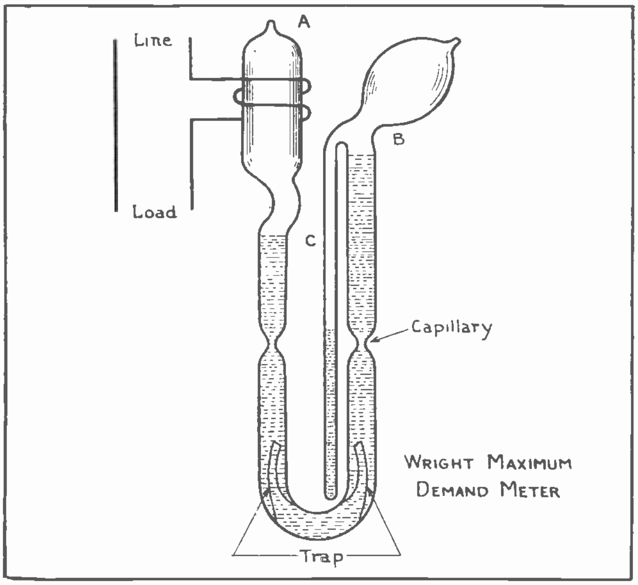

Fig. 98. This sketch illustrates the principle of a common type maximum demand meter which operates by expansion of the air in the bulb "A", when current is passed through the coil around this bulb.

As the heat developed in the resistance coil is proportional to the square of the current passing through it, the index tube "C" can be graduated or equipped with a graduated scale behind it; so the maximum current in amperes can be read from the height of the liquid in this tube.

A momentary increase in load will not register on an indicator of this type, because it requires a little time for the heat in the coil to expand the air inside the tube. This is a desirable feature, as it usually is not desired to measure peak loads that last only an instant.

A load increase which lasts for 40 minutes will register the full amount, or 100%, of the increase.

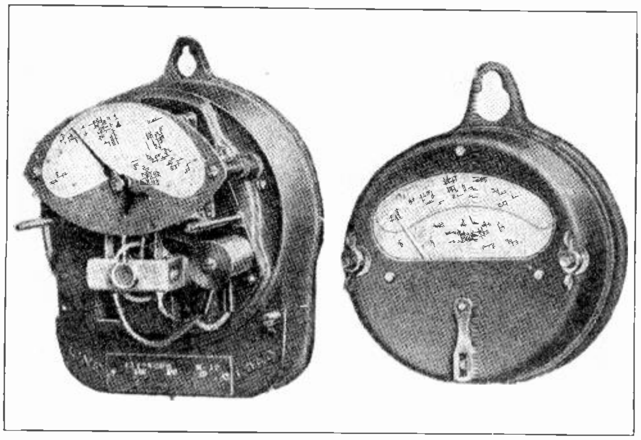

Fig. 98-A. Two types of demand meters using pointers operated by magnets and thermostats instead of liquid to indicate maximum load.

After a reading, this type of instrument can be reset by tilting the tube and allowing the liquid to flow back into tube "B".

Small, inverted, glass funnels are fastened inside the bottom of each side of the tube, to prevent the passage of air from one side of the tube to the other. These are called **traps.** When the tube is tilted to reset the indicator, these traps remain covered with liquid and prevent air from passing through.

Recording wattmeters or ammeters also serve as maximum-demand meters, as they show all load variations.

Another type of maximum-demand meter uses a combination of a wattmeter element and pointer and a watthour meter time element, to allow the wattmeter pointer to register only over certain time periods.

Some demand meters use a thermostatic strip to move the pointer as the strip is expanded and warped by the heat of the load current.

Fig. 98-A shows demand indicators of these types.

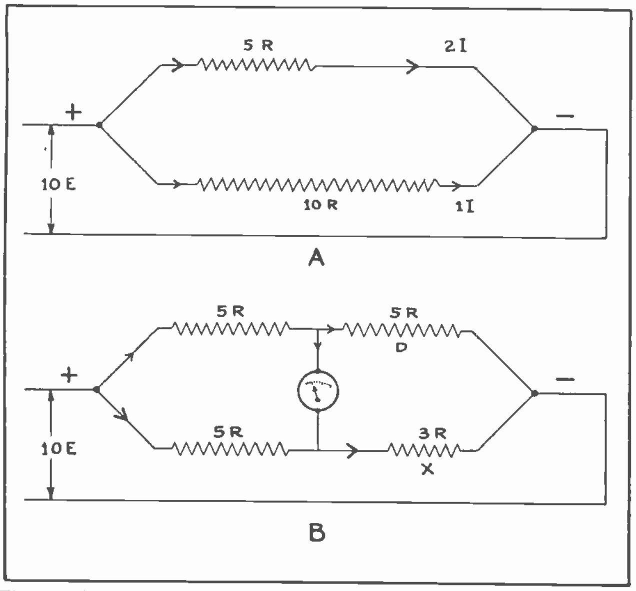

Fig. 99. The sketch at "A" shows the manner in which current will divide in inverse proportion to the resistance of two parallel circuits. At "B" is shown the manner in which current will flow through a galvanometer placed between four resistances, one of which is of a different value than the rest.

110. WHEATSTONE BRIDGE

This instrument is a very convenient device for measuring the resistance of electric circuits or devices, by comparison with standard resistances of known value.

You have already learned that electric current will tend to follow the path of lowest resistance, and will divide through parallel paths in inverse proportion to their resistance.

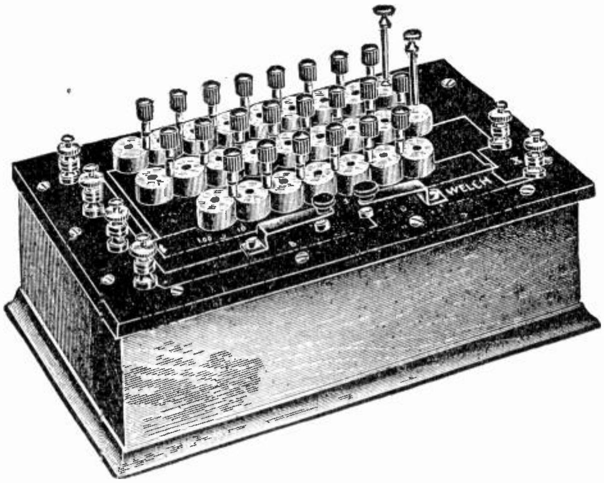

Fig. 100. Resistance box of a common Wheatstone bridge. Note the plugs which are used for varying the amount of resistance in the circuit.

For example, suppose we have one resistance coil of 5 ohms and one of 10 ohms connected in parallel, as shown in Fig. 99-A. If we apply 10 volts to the end terminals, 2 amperes will flow through the 5-ohm coil and 1 ampere through the 10-ohm coil.

Now let us connect a group of four coils as shown in Fig. 99-B. Here we have two coils of 5 ohms each in series on one path, and a 5-ohm coil and a 3-ohm coil in series on the other path.

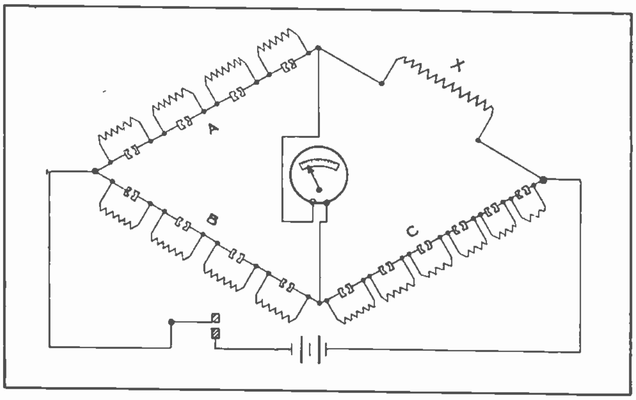

Fig. 101. This diagram shows the connections and principle of a Wheatstone bridge or resistance balancer. Note how the split metal sockets can be used to short out various resistance coils when a metal plug is inserted in these sockets. Study this diagram carefully while referring to the explanations on these pages.

If we now connect a sensitive galvanometer across the center of the paths between the coils, as shown, it will indicate a flow of current from the upper path to the lower when voltage is applied to the terminals of the group.

Tracing from the positive terminal to the center of the group, the resistance of each path is equal, but from this point on to the negative terminal the lower path or coil "X" has the lowest resistance. For this reason, some of the current tends to flow down through the galvanometer wire to the lower coil or easier path.

If we changed the coil "D" to one of 3 ohms, both sides of the circuit would again be balanced and no current would flow through the galvanometer.

On this same principle, if the resistance of coil "X" is not known, we can determine it by varying the resistance of coil "D" in known amounts until the galvanometer indicates zero, or a balanced circuit. We would then know that the resistance of coil "X" is equal to whatever amount of resistance we have in coil "D" to secure the balance.

111. OPERATION AND CIRCUIT OF WHEATSTONE BRIDGE

The Wheatstone Bridge operates on this same general principle. It consists of a box of resistance coils with convenient plugs for cutting coils of various resistance in and out of the balancing circuits. Fig. 100 shows the resistance box of a bridge of this type.

Some bridges have knobs and dial switches instead of plugs for switching the resistance units; and some have the galvanometer built in the top of the box, and the dry cells inside.

Fig. 101 shows a diagram of a common type of bridge and the method by which the coils can be left in the various circuits or shorted out by inserting metal plugs in the round holes between metal blocks attached to the ends of each resistance coil.

The coil or line of which the resistance is to be measured is connected at X. The circuits A, B, and C are called **Bridge Arms.** A and B are called **Ratio Arms,** or **balance arms**; and C is called the **Rheostat Arm.**

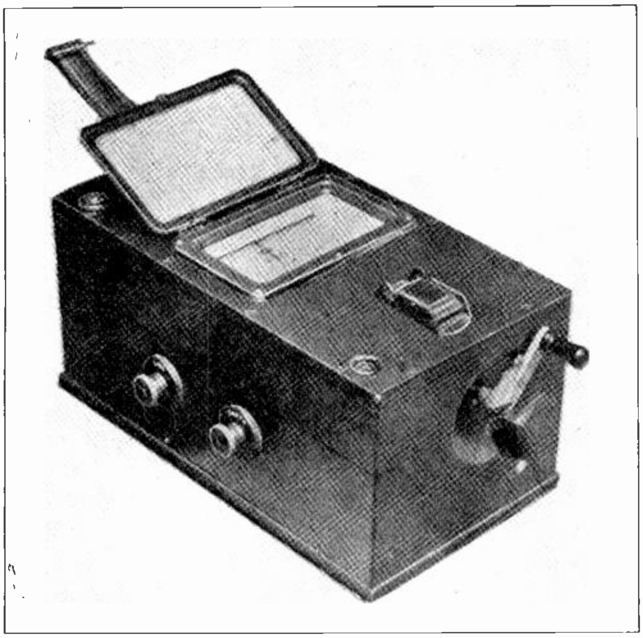

Fig. 102. The above photo shows a "Megger", or device used for measuring the resistance of insulation and high resistance circuits. This instrument contains its own D. C. generator as well as meter element.

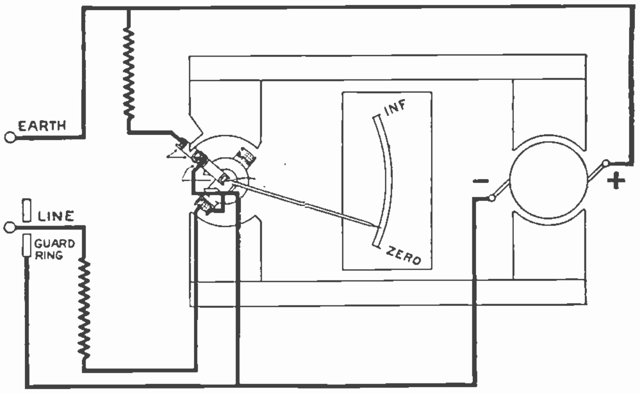

Fig. 103. Simple circuit showing the connections and principles of a "Megger". Note the arrangement of the D. C. generator armature and meter element at opposite ends of the magnet poles and the connections of this device to the line or test terminals.

Arms A and B usually have the same number of resistor units of similar values in ohms. Arm C has a number of resistors of different values.

When the unknown resistance, X, has been connected in and the bridge arms so balanced that the galvanometer shows no reading when the button is pressed, the resistance of X in ohms can be determined by the use of the following formula:

$$X = \frac{A}{B} \times C,$$

In which:

X = resistance in ohms of device under test.
A = known resistance in ratio arm A.
B = known resistance in ratio arm B.
C = known resistance in rheostat arm C.

The Wheatstone bridge is a very convenient device for testing the resistance of coils or windings of electrical equipment; of lines, cables and circuits; and of the insulation on various wires or devices.

There are a number of types of bridges for resistance measurement, most of which are supplied with a connection chart and instructions for operation. So, with a knowledge of their general principles as covered here, you should be able to use and operate any ordinary bridge.

112. "MEGGER"

Another testing instrument frequently used by the practical electrician for testing the resistance of insulation on electrical machinery is known as a **Megger.** This name comes from the fact that this instrument is commonly used to measure resistances of millions of ohms; and a million ohms is called one meg-ohm.

The megger consists of a small hand-operated D. C. generator and one or more meter elements, mounted in a portable box, as shown in Fig. 102. When the crank is turned, the D. C. generator will produce from 100 to 1000 volts D. C., according to the speed at which the generator is rotated and the number of turns in its winding.

Normal operating voltage is usually from 300 to 500 volts, and is marked on the meter scale. Some of these instruments have a voltmeter to show the generator voltage, and an ohm-meter to indicate the insulation resistance of the device under test.

The terminals of the instrument can be connected to one terminal of a machine winding and to the machine frame. Then, when the crank is rotated the insulation resistance in meg-ohms can be read directly from the scale.

Fig. 103 shows the internal connections of a megger and the terminals for connections to the equipment to be tested. As the insulation of electrical machines or lines becomes aged, or in some cases where it has been oil or water-soaked, its resistance in ohms is considerably reduced. Therefore, the resistance test with the megger is a good indication of the condition or quality of the insulation.

Periodic megger tests of electrical equipment and records of the insulation resistance will often show up approaching trouble before the insulation breaks down completely and burns out the equipment.

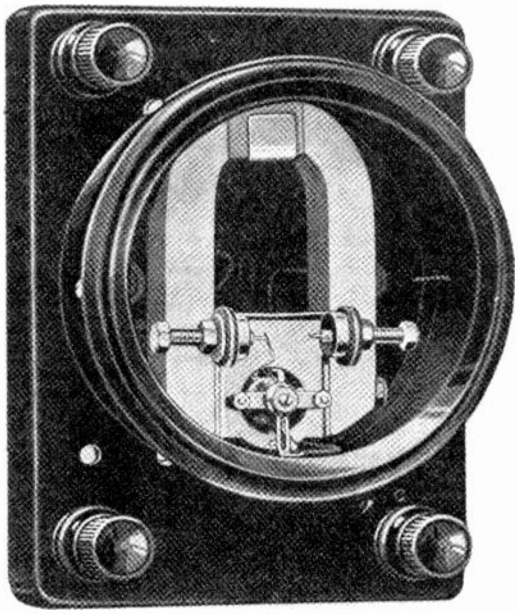

Fig. 104. Very sensitive relays such as shown above are commonly made with the same principal elements used in voltmeters or ammeters. Relays of this type can be used to open or close various circuits at any set voltage or current values.

Either the Wheatstone bridge or the megger can be used to determine the approximate location of grounds or faults in cables and long lines, by measuring the resistance from the end of the line to the fault, through the cable and its sheath or the earth. Then, by comparing this resistance with the known resistance total of the line or with its resistance per foot or per 1000 ft., the distance to the fault can easily be calculated.

113. METERS ESSENTIAL IN ELECTRICAL WORK

A number of simple and practical tests of resistance can also be made with voltmeters and ammeters, and the use of ohms law formulas. By applying voltage of a known value to any device and accurately measuring the current flow set up by this voltage, we can readily calculate the resistance of the circuit or device by the simple formula:

$$R = \frac{E}{I}$$

While on the subject of meters, it will be well to mention that very sensitive relays are often made from regular meter elements, using a short armature or moving contact in place of the regular pointer or needle. Fig. 104 shows a relay of this type. In this figure you can see the short contact needle attached to the moving coil, and the adjustable contacts on each side of this needle.

By proper adjustment of the contacts of relays of this type, they can be made to close or open circuits when the voltage or current values rise above or fall below any certain values.

Keep well in mind the importance of ordinary electric meters in the work of any practical, up-to-date electrician, and remember that great savings in power or equipment can often be made by the proper use of electrical meters and instruments.

For testing the efficiency of machines, checking operations in power plants, inspection of electrical equipment, and for trouble shooting and fault location, electrical meters of the proper types are of enormous value.

The trained practical man should never overlook an opportunity to effect a saving or improve operation by the selection and use of the proper meters.

COYNE
Electrical School
CHICAGO ~ ~ ILLINOIS

ESTABLISHED 1899

DIRECT CURRENT POWER AND MACHINES

Section Three

D. C. Motors
Operation and Principles
Types, Series, Shunt, and Compound
Uses and Applications, H. P. and Efficiency Tests
Controllers
Manual Starters, Speed Controls, Automatic Controllers
Drum Controls, Overload Devices
Carbon Brushes
Types, Applications, Pressure, Fitting and Care
Maintenance of D. C. Machines
Trouble Charts, Testing, Tools, Repairs

DIRECT CURRENT MOTORS

An electric motor, as you have already learned, is a device for converting electrical energy into mechanical energy, or to perform just the opposite function to that of a generator. Motors supply mechanical energy to drive various machines and equipment by means of belts, gears, and direct shaft connections.

When electricity from the line is supplied to terminals of the motor, it develops mechanical force or energy which tends to rotate its armature and any equipment which may be attached to its shaft. This twisting effort or force is known as the **Torque** of the motor.

114. TYPES OF D. C. MOTORS

Direct current motors can be divided into three general classes, the same as D. C. generators were, namely, **Shunt, Series,** and **Compound** motors. These motors are classified according to their field connections with respect to the armature, in the same manner in which the generators were classified.

Compound motors can be connected either cumulative or differential. With generators we find that the shunt, series, and compound types each have different voltage characteristics. With motors, **the effect of these different field connections is to produce different speed and torque characteristics.**

Motors are made with various types of frames, known as **Open Type, Semi-enclosed,** and **Closed Type** frames.

Fig. 105 shows a modern D. C. motor with an open type frame. A frame of this type allows easy access to the commutator, brushes and parts, for adjustment, cleaning and repairs; and also allows good ventilation. Open type motors are generally used where they are to be operated in clean places, and where there is no danger of employees coming in contact with their live parts; and no danger of fire or explosions which might be caused by sparks at their brushes.

Fig. 105-A shows a motor with a semi-enclosed frame. Frames of this type will enclose all the live and moving parts of the motor, and at the same time allow ventilation through the small openings provided in the end plates and around the motor frame.

Fig. 106 shows a motor with a completely enclosed frame. Motors of this type are often built larger and wound with larger wire, so they do not develop as much heat. In some cases they are practically air-tight, and have ventilating tubes attached to their casings to bring cooling air from another room.

Motors with enclosed frames of this type can be used in places where the air is filled with dust and dirt, or possibly vapors or explosive gases.

Enclosed frame motors should always be used where abrasive dust or metal dust is present in the air, or in mills where wood or grain dust might be exploded by any possible sparks from brushes.

115. MOTOR SPEEDS AND H. P.

D. C. motors are always rated in horse power, and range in size from those of a small fraction of one horse power to those of several thousand horse power each. The smaller motors are used for driving household appliances, laboratory equipment, and small individual shop machines, such as drill presses, small lathes, etc. Medium-sized motors, ranging from one horse power to several hundred horse power each, are used for driving machinery in factories and industrial plants, for street railways and electrical locomotives, and for elevator machinery. The larger types, ranging from several hundred to several thousand horse power each, are used principally in steel mills and on electrically-driven ships.

The horsepower ratings of motors refer to the maximum continuous output they can deliver without overheating.

The speed at which D. C. motors are designed to operate depends principally upon their size, because the diameter of the armature, as well as the R. P. M., are what determine the centrifugal forces set up in the conductors and commutator bars.

Very small motors commonly have speeds from 2000 to 4000 R. P. M., while motors of medium or average size, ranging from 1 to 25 h. p., usually rotate at speeds from 1000 to 2000 R. P. M.

Very large motors operate at much lower speeds, generally ranging from 100 to 500 R. P. M.; although some large steel-mill motors have speeds as low as 40 R. P. M.

The speed at which any D. C. motor operates is always determined by the counter-E. M. F. which is generated in its armature.

This counter-E. M. F., or back-voltage, we might

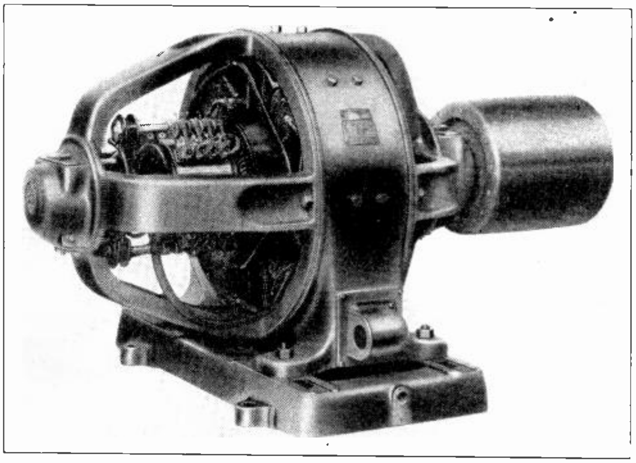

Fig. 105. This photo shows a modern D. C. motor with an open type frame. Note the easy access a frame of this construction provides to the commutator, brushes, and field coils.

say acts as a throttle to control the current flow through the armature, and therefore acts as a governor of the motor speed. In the following pages this principle will be explained more fully in connection with the characteristics of the different types of motors.

116. MOTOR SPEED REGULATION AND CONTROL

In referring to the characteristics and operation of electric motors, we frequently use the terms **Speed Regulation** and **Speed Control.** These terms have entirely separate meanings, and their difference is very important.

Speed Regulation refers to changes in speed which are automatically made by the motor itself, as the load on the machine is varied. Speed regulation is largely determined by the construction of the motor and its windings and is a very important factor in the selection of motors for different classes of work.

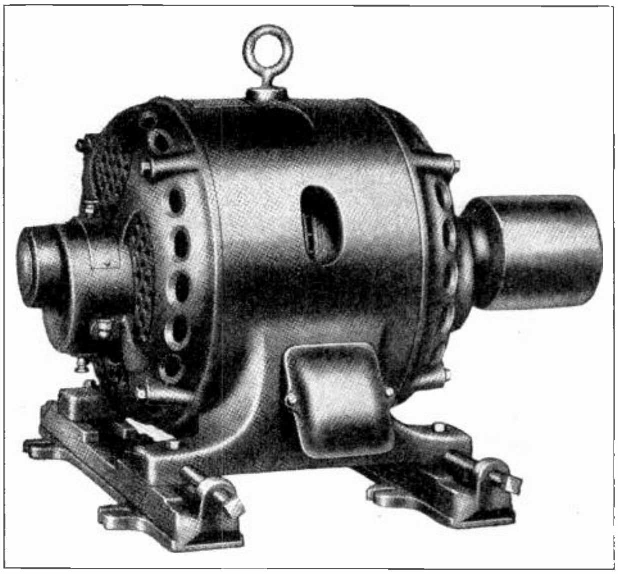

Fig. 105-A. This motor has a frame of the semi-enclosed type. The openings at the ends and around the frame are provided for air circulation and cooling.

The speed regulation of a motor is usually expressed in percentage and refers to the difference in the speed of the machine at no load and full load. It can be determined by the following formula:

$$\text{Speed regulation} = \frac{\text{No load R. P. M.} - \text{full load R. P. M.}}{\text{No load R. P. M.}}$$

For example, if we have a motor that operates at 1800 R. P. M. when no load is connected to it and slows down to 1720 R. P. M. when it is fully loaded, its speed regulation would be:

$$\frac{1800 - 1720}{1800}, \text{ or } .044 +$$

This would be expressed as 4.4%.

Motor speed regulation is entirely automatic and is performed by the motor itself, as the load varies.

The term **Speed Control** refers to changes which are made in the motor speed by the use of manual or automatic control devices. These speed control devices are usually external to the motor and consist of some form of variable resistance. They will be fully explained in the following pages.

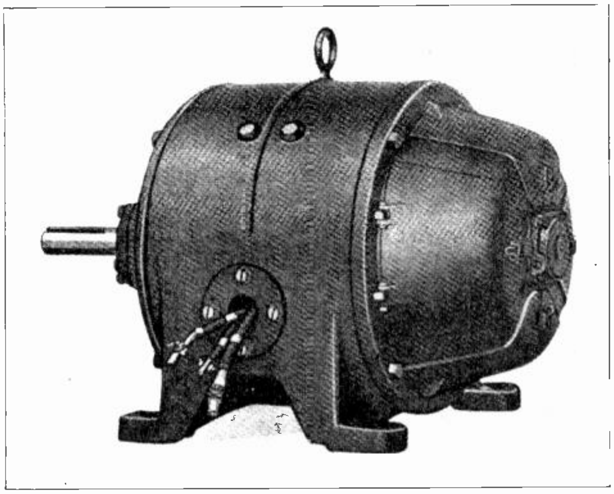

Fig. 106. The above motor has a frame of the enclosed type. Motors of this type are particularly well suited for operation in places where the air is full of dust or vapor.

117. MOTOR RATINGS IN VOLTS, AMPERES, AND H. P.

The rating of a D. C. motor in horse power, amperes, and volts depends on the same factors in their design as the rating of generators does. The motor ratings in horse power are also based on the same factor of the temperature increase in their windings when operated at full rated load.

For example, a 10 h. p. motor is one that when supplied with the proper voltage for which it is designed will drive a 10 h. p. mechanical load continuously without overheating its windings. The current required by a motor is, of course, proportional to the mechanical load in h. p. which it is driving.

In addition to carrying the load without heating the windings, the motor must also be able to carry its full load current without excessive heating or sparking at the brushes and commutator.

Motors are generally designed to carry overloads of a greater amount and for longer periods of time than generators are. Most D. C. motors can carry a 25% overload for a period of two hours, without serious overheating.

We have already learned that D. C. motors are similar to D. C. generators in all details of their mechanical construction. In fact, manufacturers frequently use the same D. C. machines either as motors or generators, by merely changing the name plates on them and making a few minor changes in the connections of the field windings and setting of the brushes.

118. MOTOR PRINCIPLES

Electric motors develop their torque or turning effort by reaction between the flux around the armature conductors and the flux of the field poles, as has been previously explained. When the magnetic lines of force from the field poles attempt to pass through the armature core and windings, they collide with the revolving flux around the armature conductors, as shown in Fig. 107.

Where the lines of force passing from the N. to S. field poles collide with lines of armature flux in the opposite direction, they will, of course, tend to unite and travel in the same direction. This causes the majority of the magnetic lines leaving the N. pole in Fig. 107 to swing upward over the positive conductor, creating a very dense magnetic field above it and a weaker field below it. As the field lines go on across the armature and collide with the downward lines on the left side of the negative armature conductor, the majority of the lines will again join with this revolving flux and pass on the under side of this conductor.

As we know that magnetic lines of force always tend to shorten themselves, or take the most direct path possible through any external circuit, it is evident that this distortion of the field flux and the crowding of the lines above the positive conductor and under the negative conductor will tend to revolve the conductors in a counter-clockwise direction. From the illustration in Fig. 107, we can see that the torque of a D. C. motor is obtained largely from the repulsion between the magnetic lines of force of the armature and field flux. That is why D. C. motors are often said to operate on the "repulsion" principle.

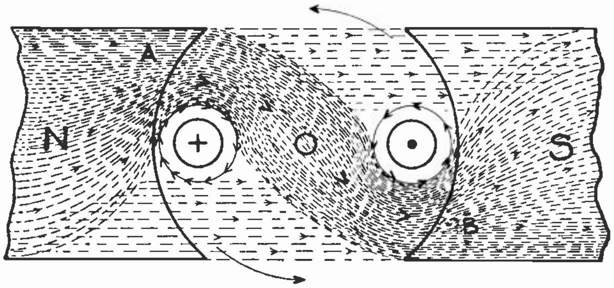

Fig. 107. The above diagram illustrates the manner in which the reaction between the lines of force from the armature and field windings set up the torque or turning effort in a motor.

119. MOTOR TORQUE, SPEED AND H. P.

The torque exerted by such a motor will, of course, depend on the strength of the magnetic flux from the field poles and the strength of the armature flux. Therefore, the torque exerted by a motor can be increased by increasing either the field strength or the armature current, or both.

The horse power or mechanical power output of a D. C. motor is proportional to the product of its torque and speed. The higher the speed at which a motor is operated while maintaining the same amount of torque, the greater will be its horse power.

D. C. motors rated at higher speeds will produce the same horse power with smaller frames and armatures. The cost of high speed motors is therefore much less per h. p. A motor frame that is rated at 5 h. p. at 900 R. P. M. will deliver 10 h. p. at 1800 R. P. M.

120. DIRECTION OF MOTOR ROTATION

The direction of rotation of a D. C. motor can be easily determined by the use of Fleming's left-hand rule. This rule is similar to the right-hand rule which we have learned to use for generators.

Hold the first finger, thumb, and remaining fingers of the left hand all at right angles to each other. Let the first finger point in the direction of flux from the field poles, the remaining fingers in the direction of current through the armature conductors, and the thumb will then indicate the direction of rotation of the armature.

This rule can be quickly and easily applied to diagrams such as shown in Fig. 107 and can also be used on the actual machines, when the armature conductors and connections to the commutator can be seen and the polarity of the field poles is known.

The direction of rotation can also be easily determined with diagrams such as shown in Fig. 107, by simply remembering that the repelling or crowding force on the armature conductor will be on the side where its flux lines join with those of the field flux.

From this study of the direction of rotation of motors, you can see that any D. C. motor can be reversed either by reversing the direction of current through the armature winding or by reversing the field connections to change the polarity of the field poles. Refer to Fig. 107, and using the left-hand rule, note the direction in which these conductors would rotate if their current were reversed or the poles of the motor were reversed.

121. COUNTER-E. M. F. IN MOTORS

You have already learned that a voltage will be induced or generated in the armature conductors of a motor whenever the machine is running, and that this voltage is called **Counter-E. M. F.** As the armature of the motor rotates, its conductors will be going through the field flux and so will produce counter-voltage in the same direction as that of the voltage of a generator rotated in the same direction as the motor. Therefore, this **counter-E. M. F. induced in a motor is always in a direction opposing the applied line voltage,** but of course is never quite as great as the applied voltage.

The amount of counter-voltage which will be generated depends upon the number of conductors in the armature, the strength of the motor field, and the speed at which the machine is operated.

Keep this rule well in mind, because the effects of counter-voltage are extremely important in the operation of D. C. motors and control equipment.

In Fig. 108, the direction of the current and voltage applied to the armature conductors from the line is shown by the solid black symbols in the two armature conductors, and the direction of the counter-voltage generated in these conductors with the polarity and rotation shown, is indicated by the lighter symbols above the conductors.

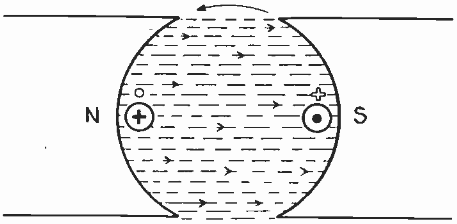

Fig. 108. The above sketch illustrates the manner in which the counter-voltage is generated in the opposite direction to the applied voltage in a motor armature.

As the counter-voltage is generated in the opposite direction to the applied line voltage, we can readily see how it limits or regulates the current which will flow through the armature and thereby acts as a governor of the motor speed.

The voltage applied to a D. C. motor armature is equal to the voltage drop in the winding plus the C. E. M. F., or

$$Ex = Ra\ Ia + CEa$$

in which

Ex = Applied voltage
Ra = Resistance of armature
Ia = Current in armature
CEa = Counter voltage or armature

Then, for example, the applied voltage of a certain 110-volt motor might be used as follows:

	Ex.		Ra Ia		CEa
No load:	110	=	1	+	109
Full load:	110	=	5	+	105

122. ARMATURE RESISTANCE NECESSARY WHEN STARTING D. C. MOTORS

When the motor armature is idle or at rest no counter-voltage is produced, and the current which would then flow through the armature would be determined entirely by its resistance and the voltage applied; according to the formula:

$$I = E \div R.$$

The resistance of D. C. motor armatures is very low, usually less than one ohm. Therefore, excessive currents would flow through them if we were to apply the full line voltage to start the machine.

For this reason, when starting D. C. motors of any but the very smallest sizes, **it is necessary to place some resistance in series with the armature to limit the current until the machine comes up to speed.** As the motor increases its speed the counter-voltage becomes higher and higher, until it limits the current to such an extent that the motor speed cannot further increase. At this point the difference between the counter-voltage and the line-voltage may be only a few volts, even on motors of quite high voltage.

The voltage effective in forcing current through the armature of a motor when it is running will be just that amount of the line voltage which is not neutralized by counter-voltage. In other words, the effective voltage will be line voltage minus counter-voltage. This is illustrated in Fig. 109, which shows the amount of the applied voltage which is neutralized by the counter-voltage developed in the armature. For this illustration we have used even and convenient figures, but in actual operation of a motor running without load the counter-voltage would be even greater in comparison to or percentage of the line voltage.

If we assume the resistance of the armature in this figure to be .2 of an ohm, the current which would flow through its winding if full line voltage were applied would be 100 ÷ .2, or 500 amperes. That is, of course, provided that no external resistance were used in series with the armature.

If this same armature develops 90 volts counter-E. M. F. when rotating at full speed and under full load, the effective voltage is then only 10 volts. So, when running at this speed, the armature current would be 10 ÷ .2, or 50 amperes. From this example you can see what a great effect counter-voltage has upon the current flow in a motor armature.

123. EFFECT OF COUNTER-VOLTAGE ON MOTOR SPEED

The current required to operate a D. C. motor when no load is connected to it is comparatively small. Let us say that the armature shown in Fig. 107 requires 50 amperes to operate it at full load, and only 5 amperes to operate it when the load is disconnected. As the resistance of the armature is only .2 of an ohm, the applied voltage to run the machine at full speed and at no load would be .2 × 5, or 1 volt. So the counter-E. M. F. during the time this motor is running idle should be 100 — 1, or 99 volts.

When the mechanical load is removed from a motor, its armature immediately tends to speed up; but as the speed increases it also increases the counter-E. M. F., thereby reducing the current flow from the line and holding the motor at a constant speed slightly higher than when operated under full load. This again serves to illustrate the manner in which counter-E. M. F. governs the speed of a D. C. motor.

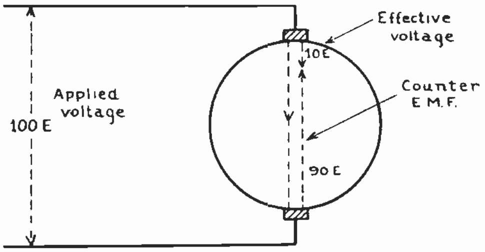

Fig. 109. From the above illustration you will note that the counter-voltage is often nearly as high as the applied voltage. This sketch illustrates the extent to which counter-voltage regulates or limits the flow through a motor armature.

124. D. C. MOTOR CHARACTERISTICS

In selecting D. C. motors for any particular work or application we must, of course, use a machine of the proper horse-power rating to start and carry the load the motor is intended to drive. In addition to the **Horse Power Rating** of the motor, the other essential points to be considered are its **Starting**

Torque and **Speed Regulation** characteristics. These characteristics vary widely for shunt, series, and compound motors, which will be thoroughly explained in the following paragraphs. Make a careful study of this section because it may often be of great advantage to you on a job to be able to select the proper motors for different applications.

125. SHUNT MOTORS

The field winding of a shunt motor is connected directly across the line or source of current supply, in parallel with its armature. This shunt field winding is made up of many turns of small wire and has sufficient ohmic resistance to limit the current through the coils to the safe carrying capacity of the conductors they are wound with. As the resistance of the shunt field winding is practically constant, this current and the strength of the field it sets up will be determined by the line voltage which is applied to the motor.

A simple diagram of the connections of the armature and field of a two-pole shunt motor is shown in Fig. 110.

126. STARTING TORQUE OF SHUNT MOTORS

The starting torque of shunt motors is only fair and they cannot start very heavy loads because their field strength remains approximately constant as long as the applied voltage is constant.

While a motor is starting the armature flux is very dense, because of the heavier currents flowing through the armature at this time.

This increased armature flux of course increases the motor torque, but it also weakens the field by distorting it and forcing it to take a path of higher reluctance; so shunt motors cannot build up as good starting torque as series or compound machines do.

As the torque of the motor depends upon its field strength as well as upon the armature current, we can see that the starting torque of a shunt motor will not be very good.

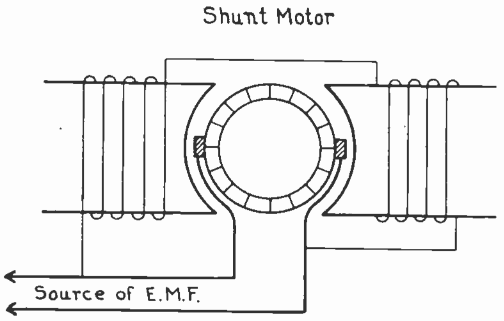

Fig. 110. Diagram of the connections for a simple shunt motor.

127. STALLING TORQUE OF SHUNT MOTORS

If a shunt motor is overloaded to too great an extent it will slow down and possibly be stopped entirely if the overload is great enough. A motor should never be allowed to remain connected to the line when in this stalled condition, or its windings will be burned out. This is due to the fact that when the armature is stopped it is generating no counter-voltage, and the applied line voltage will send a severe overload of current through the low resistance armature. Fuses or circuit breakers should be provided to open the line circuit to the motor in a case of this kind.

The ability of a motor to carry overload without stalling is often referred to as the **Stalling Torque** of the motor.

Shunt motors will carry their full, rated load but should not be overloaded to any great extent, as their stalling torque is only fair.

128. SPEED REGULATION OF SHUNT MOTORS

The speed regulation of shunt motors is excellent, as the strength of their field remains practically constant, and as long as the proper line voltage is applied they will maintain practically constant speed under wide variations of the load.

The shunt motor will of course slow down a little when the load is increased; but, as soon as the armature speed is reduced even slightly, this reduces the counter-voltage generated and immediately allows more current to flow through the armature, thereby increasing the torque and maintaining approximately the same speed.

The speed of shunt motors ordinarily should not vary more than three to five per cent. from no load to full load. Fig. 111 shows a set of curves which illustrate the speed regulation of series, shunt, and compound motors. Note that the speed of the shunt motor only falls off very gradually as the load is increased.

129. SPEED CONTROL AND APPLICATIONS OF SHUNT MOTORS

The speed of shunt motors can easily be varied or controlled by inserting a rheostat in series with

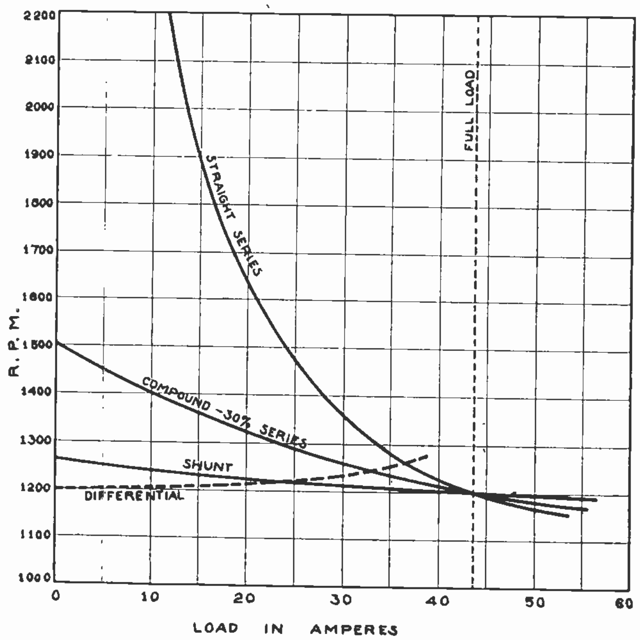

Fig. 111. The above diagram shows the characteristic speed curves for several types of D. C. motors. Note carefully the manner in which the speed varies with increase of load.

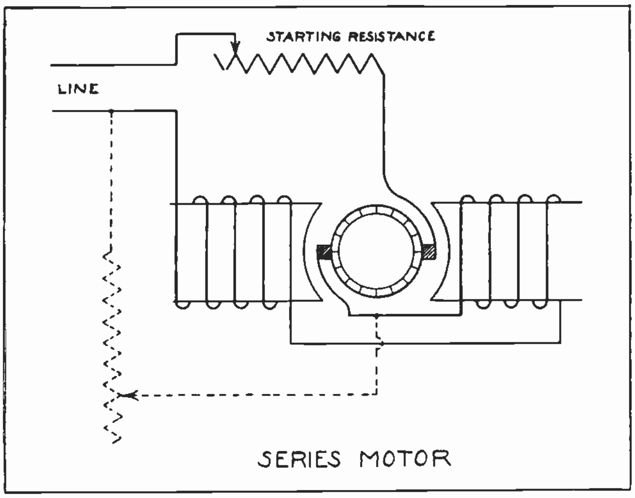

Fig. 112. Diagram of the connections for a simple series motor. The dotted lines show where a shunt can be connected in parallel with the field coils for varying the speed.

their field. If the field is weakened, the motor speed will increase, because the reducd counter-voltage allows more current to flow through the armature. If the field is strengthened, the motor speed will decrease, because this stronger field allows the normal counter-voltage to be generated at lower speed.

The uses and applications of shunt motors are many and varied. They may be used on any job where more than full-load torque is not required for starting and where practically constant speed is essential. They are extensively used for pumps. elevators, motor-generator sets, and for the operation of lathes and various machines used in manufacturing appliances.

130. SERIES MOTORS

Series motors have their field coils connected in series with the armature and the line, as shown in Fig. 112. The windings for the fields of series motors are made of heavy copper wire or strap copper, and may consist of anywhere from a few dozen to a few hundred turns.

The strength of the field of the series motor depends upon the amount of current flowing through the armature and series field coils.

As the armature current depends upon the motor load and speed, the field strength of a series motor will be much greater at heavy loads and low speeds than at light loads and higher speeds, when the armature is developing a greater counter-E. M. F.

131. STARTING TORQUE

The armature current is usually at its greatest value when starting a motor because when the armature is idle or rotating at low speeds it doesn't generate much counter-E. M. F., and very heavy currents will flow through the armature until it comes up to speed. For this reason the starting torque of series motors is excellent.

The torque of motors of this type varies directly with the square of the armature current, because any increase of current through the armature also increases the field strength, as the two windings are in series.

Series motors are capable of starting very heavy loads, and this makes them particularly adaptable for use on street cars and electric railways, and other special applications where the machinery to be driven is difficult to start.

132. STALLING TORQUE

Series motors also have excellent stalling torque, because, when they are overloaded, their speed is reduced and less counter-voltage will be generated in the armature. This allows more current to flow both through the armature and field coils, greatly increasing the flux around the armature conductors and from the field poles.

It is almost impossible to stall a series motor with any reasonable load, because the slower the speed becomes, the more current will flow through the armature and field of the motor, and the greater its torque becomes.

Of course, it is possible to burn out a series motor by overloading it in this manner, if the overload is left on it too long.

133. SPEED REGULATION

The speed regulation of series motors is very poor, because their speed varies inversely with the load applied. Any increase of load actually strengthens the field flux of the series motor. This causes a higher counter-voltage to be generated and momentarily reduces the armature current, until the speed of the motor drops enough lower to bring the counter-voltage back to normal or less than normal, to allow the increased current flow required for the additional load.

If some of the load is removed from the series motor, this decreases the flow of current and weakens its field. The weaker field develops less counter-voltage and momentarily allows more current to flow, until the speed is increased enough to build the counter-voltage up again somewhat above normal value.

Thus, series motors will operate at very high speeds when the load is light and they will overspeed if the load is entirely disconnected. For this reason **series motors should never be operated without load,** or the speed will increase to a point where centrifugal force may throw the armature apart.

Series motors should always be attached to their load by gears or direct shaft connection, and never by belts. If a series motor were belted to its load and the belt should break or slip off the pulleys, the motor might dangerously overspeed before it could be stopped.

In Fig. 111, the speed curve for a series motor is shown, and you will note how rapidly the speed decreases with any increase of load.

There are certain applications for motors, however, where the decrease of speed with increase of load is very desirable.

134. SPEED CONTROL

The speed of a series motor can be controlled or varied at will by the use of resistance in series with the motor. Increasing this resistance will reduce the flow of current through both the armature and field of this type motor, and thereby reduce its torque and speed.

This is one of the methods used to vary the speed of electric street cars, by cutting resistance in or out of the motor circuit with the drum controller. When the resistance in series with the machine is varied, the voltage across the armature is varied accordingly, and the armature slows down or speeds up correspondingly until the counter-E. M. F. and effective voltage again equal the applied voltage.

The speed of series motors can also be varied by connecting a shunt in parallel with their field coils, as shown by the dotted lines in Fig. 112. This shunt merely passes a certain amount of the armature current around the field winding, and thereby weakens the field strength and increases the speed of the motor. These shunts can be used only to increase the motor speed and not to decrease it.

135. USES AND APPLICATIONS OF SERIES MOTORS

The uses and applications of series motors are somewhat limited because of their wide variation in speed when the load is varied, and their tendency to overspeed when the load is removed. Series motors are not adapted to driving machinery or equipment which place a variable load on the motor and require practically constant speed.

Series motors are used principally for electric cranes, hoists, and railway service, and are well suited to this work because of their high torque at low speeds and low torque at high speeds. They are particularly well adapted to electrical traction work because of their splendid starting torque, which enables them to start heavy cars quickly and also climb hills with heavy loads. Their speed characteristic is also an advantage in this case, because it is possible to obtain high speeds with cars operated by this type of motor when the cars are running on the level or with light loads.

136. COMPOUND MOTORS

Compound D. C. motors have some of the characteristics of both the shunt and series motors, as they have both a shunt and series field winding on each pole. The shunt field of the ordinary machine is made up of many turns of small wire and is connected in parallel with the armature and line, as shown in Fig. 113. The strength of the shunt field flux will therefore be proportional to the applied line voltage and will be practically constant as long as this voltage is not varied.

The series field winding is usually made of very heavy copper wires or strap copper and may vary from a few turns to 100 turns or more per pole. This winding is connected in series with the armature, as shown in Fig. 113, and carries the full load current which passes through the armature.

The strength of the series field will therefore be proportional to the load applied to the motor. The shunt field, however, is the one that always determines the polarity of the machine under ordinary conditions and, therefore, it is called the main field winding.

Compound motors can be connected either cumulative or differential, by simply reversing the connections of their series field windings. The connections shown in Fig. 113 are for a cumulative compound motor, and most D. C. motors are understood to be connected in this manner, unless they are marked or designated as differential-compound.

With the series field connected for cumulative-compound operation, the current flows through these coils in the same direction that it does through the shunt coils, and therefore aids in setting up a stronger field when there is any load on the motor.

137. STARTING AND STALLING TORQUE

Cumulative-compound motors have a very much better starting-torque than shunt motors, because the heavier armature currents which flow during starting also pass through the series field and greatly strengthen its flux, thereby increasing the motor torque.

Motors of this type can be used for starting very heavy loads or machinery that is difficult to start and bring up to speed.

The stalling torque of cumulative-compound motors is also very good, because any increase of load on the machine will increase its armature current and the current through the series field. This increases the flux of the field poles, which in turn increases the motor torque and enables it to carry the additional load at slightly reduced speed.

Such motors can be allowed to carry reasonable overloads of 15 to 25 per cent. as long as they don't overheat enough to damage their insulation.

138. SPEED REGULATION AND APPLICATIONS

The speed regulation of cumulative-compound motors can be considered as fair. Their speed will vary inversely with the load, because any increase of load also increases the field flux due to the action of the series winding; and when the field flux is increased, the armature speed must decrease, in order

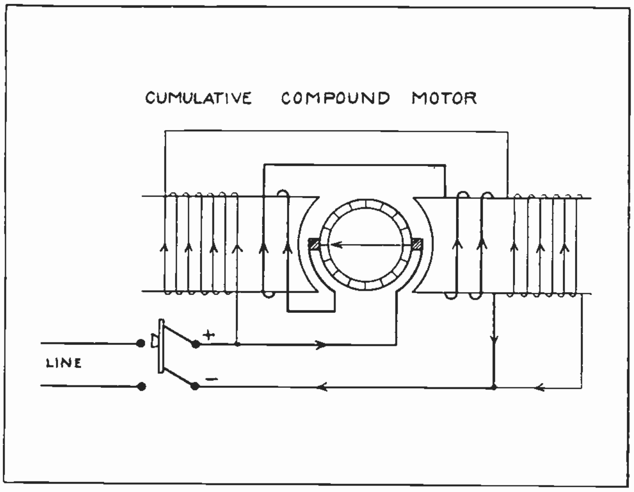

Fig. 113. Diagram of connections for a cumulative compound motor. Note that the series field winding is connected so it will aid the shunt field winding in providing a strong field.

to lower the counter-E. M. F. sufficiently to allow enough current to flow to carry the load. The stronger the field of any motor, the lower will be the speed at which it can generate the normal counter-E. M. F.

Compound motors are used extensively to drive power shears, the rolls of steel mills, and in factories and industrial plants for running machines which require good starting and stalling torque and don't require very close speed regulation.

139. DIFFERENTIAL COMPOUND MOTORS

When compound motors are connected for differential operation their characteristics change considerably from those of cumulative machines.

A differential compound motor has its series field so connected that the current will flow through it in the opposite direction to that of the current in the shunt field windings, as shown in Fig. 114. This tends to weaken the flux set up by the field poles whenever any load is being carried by the motor.

The shunt field winding is the main winding and under ordinary conditions it determines the polarity of the field poles. Occasionally, however, when these motors are started up rather suddenly and under heavy load, the current flow through the differential series winding becomes very strong; and due to its strong flux and the inductive effect which it has on the shunt field coils during the time this flux is building up around the series winding, it may overcome the shunt field flux and reverse the polarity of the field poles. This will cause the motor to start up in the wrong direction.

To avoid this, the series field of a differential motor should be short-circuited when starting. This can be done by the use of a single-pole knife switch of the proper size, connected across the series field terminals, as shown in Fig. 114.

140. STARTING TORQUE AND STALLING TORQUE

The starting torque of an ordinary differential-compound motor is very poor, even poorer than that of a shunt motor. This is due to the effect of the heavy starting currents flowing through this field and weakening the flux of the shunt field to such an extent that the motor has very poor starting torque. Motors of this type are usually started without any load connected to them.

A reversing switch can be used to reverse the polarity of the differential field and make the motor operate cumulative during starting, and thereby improve the starting torque of this motor.

Differential motors will not carry overload without stalling. In fact they will usually only carry about 75% of the full rated load of a shunt motor of the same size. Whenever the load on such a machine is increased, the series field current is increased and, because it flows in the opposite direction of that in the shunt winding, it tends to neutralize and weaken the total field flux and also weaken the load-pulling torque.

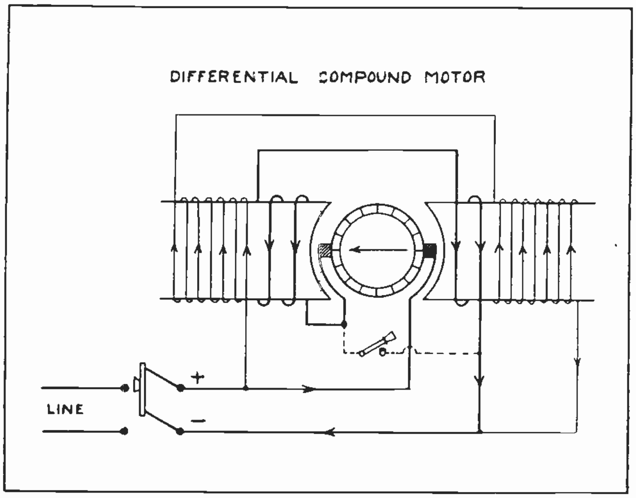

Fig. 114. Differential compound motor connections. Note that the series field is connected so it will oppose and weaken the effect of the shunt field.

141. SPEED REGULATION AND APPLICATIONS

Differential-compound motors have excellent speed regulation up to a certain amount of load. As the load is slightly increased, the motor tends to slow down, but the increased current through the differential series field immediately weakens the shunt field flux and thereby causes the counter-E. M. F. in the armature to be reduced.

This allows more current flow through the armature and maintains the speed at normal value. With just the proper number of turns on a differential series field, the tendency of the motor to slow down with increased load and the tendency to speed up with weakened field can be so balanced that they will neutralize each other, and the speed will remain almost perfectly constant if the load change is not too great.

Note the speed curve shown for this type of motor in Fig. 111.

Differential-compound motors are not used very extensively, because of their very poor starting torque; but they have certain applications where very little starting torque is required and good speed regulation is essential. The operation of textile mill machinery is a good example of this application.

A convenient, practical method for determining whether a compound motor has its series field connected differential or cumulative is to operate the motor and note its speed. Then reverse the series field connection and again note the speed. Whichever connection gives the most speed is the differential connection of the series field winding.

142. BRAKE HORSE-POWER TEST FOR MOTORS

Occasionally it may be desirable to make an actual test of the horse-power output of a motor, in order to determine its condition or efficiency. This can be done by arranging a brake or clamp to apply load to the pulley of the motor and thereby measure the pull in pounds or the torque exerted by the motor.

This method is known as the **Prony Brake Test.**

Fig. 115 shows the equipment and method of its use for making this test. The brake can be made of wood blocks cut to shape to fit the pulley and fitted with bolts and wing nuts so the grip or tension of the blocks on the pulley can be adjusted. When making a number of these tests, it is also a good plan to line the curved faces of the block with ordinary brake lining such as used on automobiles. This makes it possible to apply a smoother braking effect without generating too much heat due to the friction.

An arm or bar, of either wood or metal, can be attached to the brake blocks as shown in the figure, and fitted with a bolt or screw eyes for attaching the scales to the end of the bar. A spring scale, such as shown in Fig. 115, can be used, or the bolt on the underside of the arm end can be allowed to rest on the top of a platform scale.

The brake arm should preferably be of some even length, such as 2 ft. or 3 ft., in order to simplify the horse-power calculation. The arm length is measured from the center of the shaft to the point at which the scale is attached.

With a device of this kind, load can be gradually applied to the motor by tightening the brake shoes or clamps until the motor is fully loaded.

An ammeter can be used in series with one of the line leads to the motor to determine when the machine has been loaded to its rated current capacity. In case an ammeter is used, a voltmeter should also be used, to see that the proper line voltage is applied to the motor at the time of the test. A wattmeter can be used instead of the voltmeter and ammeter if desired.

When the brake has been adjusted so that the motor is drawing its full rated load in watts, the pound pull on the scale should be noted and the speed of the motor in revolutions per minute should be carefully checked.

The adjustment on the brake should be maintained to keep the motor pulling the same amount on the scales and drawing the same load in watts during the time the speed is being checked.

The motor speed can easily be checked by means of a speed counter or tachometer applied to the end of its shaft while running. A watch with a second-hand should be used for gauging the time accurately.

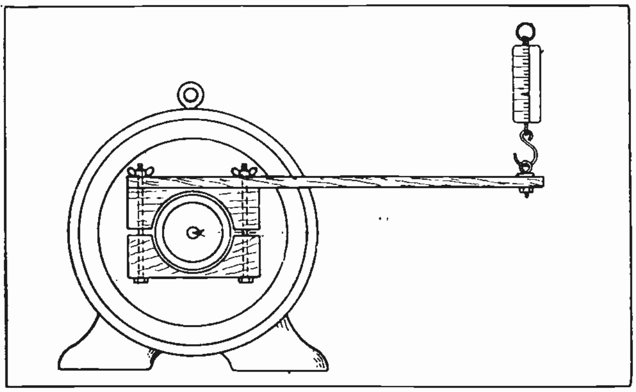

Fig. 115. The above diagram illustrates the method of making a brake-h. p. test on a motor.

143. HORSE POWER CALCULATION

The horse power of a motor is proportional to the product of its torque and speed. Therefore, when we know the length of the lever arm in feet, the pull in lbs. on the scales, and the speed of the motor in R. P. M., we can easily determine the horse-power output by the following simple formula:

$$\text{h. p.} = \frac{2 \times \pi \times \text{R. P. M.} \times \text{P} \times \text{L}}{33{,}000}$$

In which:

h. p. = the horse power developed by the motor

π = 3.1416, or the ratio between the diameter and circumference of a circle. ($2 \times \pi = 6.28$)

R. P. M. = Speed of the motor in revolutions per minute

P = Lbs. pull on the scale

L = Length of lever arm in feet

33,000 = Number of foot-pounds required per per minute for one h. p.

As an example, suppose we have made a test on a motor using a brake arm two ft. in length, and have found that when the motor is fully loaded according to the electrical instruments, it applies 9 lbs. pull on the end of the arm and revolves at a speed of 1500 R. P. M. Then, according to our formula:

$$\text{h. p.} = \frac{6.28 \times 1500 \times 9 \times 2}{33{,}000} \text{ or } 5.1 \text{ h. p.}$$

144. EFFICIENCY TESTS

The efficiency of a motor is, of course, an important item, especially where a large number of motors are being chosen for continuous operation of certain equipment. The higher the efficiency of any motor, the greater the h. p. it will produce from a given amount of electrical energy in watts, and the less power will be wasted in losses within the machine.

These losses are partly mechanical, such as bearing friction and "windage" due to the armature revolving through the air at high speed. They are also partly electrical, such as losses in the armature and field windings due to resistance and to a certain amount of energy being transformed into heat, and the slight magnetic losses due to hysteresis and eddy currents.

The efficiency of D. C. motors may vary from 50% or less for the very small fractional horse power machines up to 90% for the larger ones, and even higher than this for extremely large motors.

The efficiency of ordinary motors from 5 to 50 h. p. will usually range between 75 and 90 per cent; so, when the efficiency of a machine is not known, a good average figure to use is 80% or 85%.

As a general rule, the larger the motor, the higher will be its efficiency. Fig. 116 shows a table in which are given the efficiencies of several sizes of

EFFICIENCY OF 230 VOLT COMPOUND D.C. MOTORS			
SIZE IN H.P.	AT ½ LOAD	AT ¾ LOAD	AT FULL LOAD
5	73 %	78 %	80 %
10	79 %	82.5 %	85 %
25	84 %	87 %	87.5 %
50	85 %	87.5 %	88.5 %
200	87 %	89 %	91.5 %

Fig. 116. This table gives the approximate efficiencies of various sized D. C. motors at various percentages of load.

motors, from 5 to 200 h. p. You will also note by examining this table that the efficiency of any motor is better at full or nearly full load. Therefore, it does not pay to operate motors lightly loaded whenever it can be avoided by the selection and use of motors of the proper size. In many cases, motors which are larger than necessary have been installed to operate certain machines, because these machines require considerable starting torque. In a case of this kind, the selection of a different type motor with a better starting torque can often effect considerable power saving.

145. EFFICIENCY CALCULATION

The efficiency of any motor can be found by dividing its output in watts by the input in watts. This is stated by the following formula:

$$e = \frac{W\ O}{W\ I}$$

In which:

e = the efficiency of the motor in per cent.
W O = watts output
W I = watts input

The output and input can both be determined in horse power or kilowatts, if preferred, and used in the same manner in the formula.

When we have made a test of the horse power of a motor by the Prony brake method and have measured the electrical power input either with a wattmeter or a voltmeter and ammeter, it is then an easy matter to determine the efficiency of the machine with the formula just given.

For example, suppose we have tested a machine and found its full load output to be 35.5 h. p. During this test the wattmeter connected to the motor leads indicated that it was consuming 31,150 watts. To obtain the output in watts, we multiply 35.5 by 746, as there are 746 watts in each h. p., and we find that the output is 26,483 watts.

Then, according to the formula, the efficiency of this motor will be found as follows:

$$e = \frac{26{,}483}{31{,}150}, \text{ or } 85+\ \%\ \text{efficiency}$$

Fig. 117-A shows the method of conecting a wattmeter to the terminals of a motor for determining the input or energy consumed. At "B" in this same figure are shown the proper connections for a voltmeter and ammeter used to determine the input of the motor.

The readings of the voltmeter and ammeter can be multiplied to obtain the power input in watts.

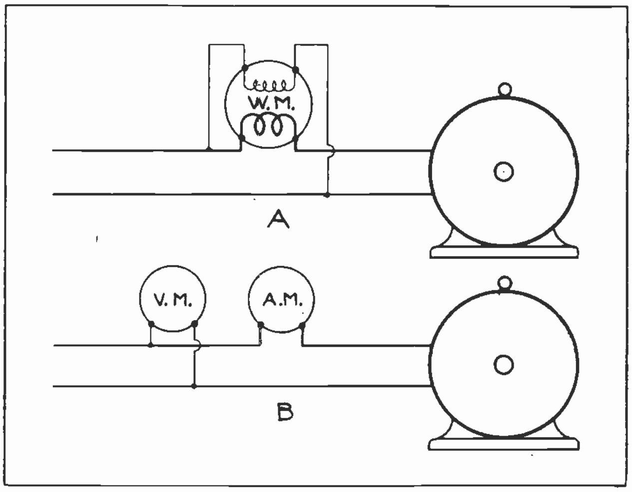

Fig. 117. The above diagram shows the method of connecting a wattmeter or voltmeter and ammeter, to determine the KW or h. p. input to a motor.

D. C. MOTOR STARTERS AND CONTROLS

There are two general types of D. C. motor control equipment. One of these is used for starting duty only, and the other can be used both for starting the motors and for controlling or regulating the speed while the motor is running.

Very small motors of fractional h. p. can be started by connecting them directly across the line, as their armatures are so small and light in weight that they come up to full speed almost instantly. Therefore, the heavy rush of starting current does not last long enough to overheat their windings.

Medium-sized and larger D. C. motors should never be connected directly across the full line voltage to start them, as their heavier armatures require more time to speed up and develop the necessary counter-voltage to protect them from excessive starting current.

If these armatures are connected directly across full line voltage when they are at rest, the rush of starting current through them is likely to be more than 10 times full-load current. This excessive current will overheat the winding, and also possibly damage the insulation of the coils by the powerful magnetic field it sets up and the mechanical forces the coils exert on the slots in trying to practically jerk the armature up to full speed.

So, for this reason, a starting resistance should always be connected in series with the armature of a D. C. motor when starting it, and left in the circuit until the motor armature has reached full speed and has built up its own protective counter-voltage.

When the current flows through this resistance, it causes sufficient voltage drop so that only about one-fourth of the line voltage is applied to the armature. Fig. 118 shows the method of connecting the starting resistance in series with the motor armature.

These starting resistances are usually arranged so they can be gradually cut out of the armature circuit as the motor comes up to speed, and when full speed is reached the resistance is all cut out.

The starting current for D. C. motors should be limited to about 1½ to 2½ times full-load current. It is therefore necesary that starting rheostats have the proper resistance value and current capacity for the motors with which they are usd.

146. TIME ALLOWED FOR STARTING MOTORS

The period of time for which the armature resistance should be left in series with the motor when starting, depends upon the size of the motor and the nature of the load attached to it. A motor connected to a heavy load, of course, requires more time to come up to full speed, and the larger the armature of a motor, the more time is required for it to reach full speed.

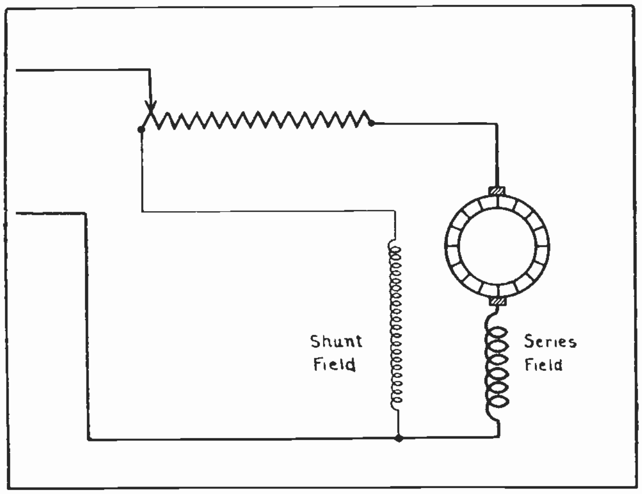

Fig. 118. This simple sketch shows the manner in which a resistance is used in series with the armature when starting a D. C. motor.

Usually from 15 to 30 seconds will be required on ordinary motors. This rule, however, cannot be strictly followed, as the time allowed for starting a motor must be largely a matter of observation and good judgment on the part of the operator. One can readily tell by the sound of the motor when it has reached full speed.

While starting and operating the various motors in your shop work, you will gain considerable practice in judging the time required for different motors. Always watch and listen to the motor closely when starting it up, and never leave the resistance in the circuit any longer than necessary, or it is likely to become damaged by overheating.

147. MOTOR STARTING RHEOSTATS

Starting resistances or **Rheostats,** as they are called, should never be used to regulate the speed of a motor after it is running. Starting rheostats are designed to carry the armature current only for a very short period and should then be cut out of the circuit. If they are used for speed regulation and left in the circuit for longer periods, they are very likely to become overheated to a point where the resistance metal will burn in two and result in an open circuit in the rheostat.

Armature starting resistances for small machines are usually made up of iron wire, or wire consisting of an alloy of nickle and iron. This resistance wire is wound on an insulating base, or form of asbestos or slate. The turns of the coil are so spaced that they don't short together.

The taps are made at various points along the coil and are connected to segments or stationary contacts which are mounted on the face-plate of the starter. A lever arm with a sliding contact is then used to cut out the resistance gradually as the motor comes up to speed.

148. SPEED CONTROL RHEOSTATS

Speed-regulating resistance can be used for starting motors and also for controlling their speed over indefinite periods. Rheostats for this use are made of larger and longer resistance material and are designed to carry the armature current for long periods without damage from overheating.

Speed-regulating resistances are in some cases made of heavy iron wire, but for medium and larger sized motors are generally made of cast iron grids or grids consisting of an alloy of nickle and iron. The nickle alloy is generally preferred in the better class controls.

149. METHODS OF CONTROLLING THE SPEED OF D. C. MOTORS

The speed of shunt and compound motors may easily be controlled by the use of a rheostat in series with the shunt field, as shown in Fig. 119. By varying the resistance of the field rheostat, we can vary the current through the field of the motor. If the field is weakened, the counter-E. M. F. generated in the armature is momentarily reduced and more current is allowed to flow through the machine.

This will cause the machine to speed up until the counter-voltage produced in this weaker field is again normal. If the motor field is strengthened, the

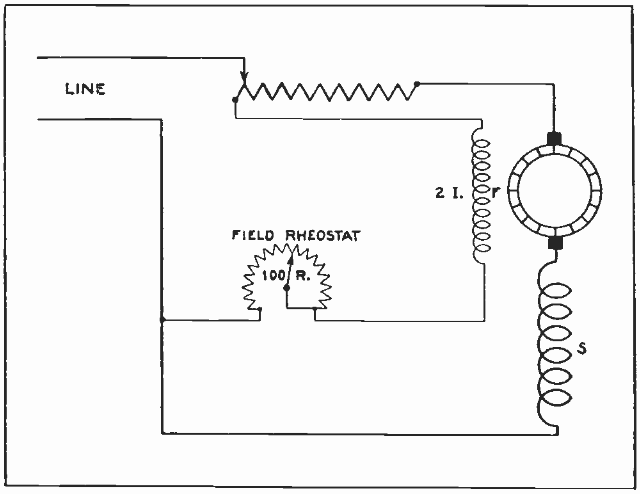

Fig. 119. This diagram shows the armature starting resistance and also a shunt field rheostat for varying the speed of the motor.

counter-voltage developed in the armature will be increased, and this will cause the current flowing through the machine to be reduced, allowing the speed to decrease until the counter-voltage developed in this stronger field is again normal.

It is possible to vary the speed of a motor only above its normal speed by the use of shunt field rheostats.

The torque of a motor armature will vary inversely with the speed when the field is weakened in the manner just described. The output in h. p., however, will remain approximately the same, as the h. p. is proportional to the product of the speed and torque.

For example, if a certain motor normally rotates at 1000 R. P. M. and develops 10 lbs. torque at the end of a brakearm, the product of this speed and torque is 1000 × 10, or 10,000.

Now, if we were to increase the speed of this motor to 2000 R. P. M., or double its normal speed, the torque, which varies inversely with the speed, will be reduced to 5 lbs., or one-half its stronger value. In this case, the speed times the torque equals 2000 × 5, or 10,000 as before.

Motors that do not have interpoles should not ordinarily be operated at speeds greater than 65 to 70 per cent above their normal speed ratings. On motors that have interpoles, it is possible to obtain speed variation as great as 6 to 1 ratio.

Field control is a very economical means of speed variation for D. C. motors, since the output of the motor in horse power remains practically unchanged and the power lost in the field rheostat is very small.

The power lost due to heating in any resistance is equal to the square of the current multiplied by the resistance, or $I^2 \times R = W$.

For example, let us assume that the resistance of the field rheostat shown in Fig. 119 is 100 ohms, and that the field current required by this motor is 2 amperes; then the power lost in the field rheostat would be $2^2 \times 100$, or 400 watts.

150. SPEED CONTROL BY USE OF ARMATURE RESISTANCE

The speed of shunt, series, and compound motors can also be regulated or varied by means of a rheostat in series with the armature, as shown in Fig. 120. An armature resistance used in this manner merely produces a voltage drop as the machine current flows through it, and thus it varies the voltage applied to the armature.

When this method of speed control is used, the strength of the shunt field of the motor is not varied, as it is connected directly across the line so it is not affected by the armature resistance. Observe this method of connection in Fig. 120..

When the voltage applied to the armature is decreased by cutting in the resistance of the armature rheostat, this will decrease the armature current and the speed of the motor. Since the torque of any motor varies with the product of the armature current and field flux, any change of this armature current produces a corresponding change in the torque and speed developed by the machine. Therefore, reducing the torque by decreasing the armature current will cause the horse-power output of the motor to be decreased.

151. SPEED CONTROL BY FIELD RESISTANCE MOST ECONOMICAL GENERALLY

Speed control by means of armature resistance is very wasteful of power because of the very heavy armature current which must be passed through the rheostat, and the losses due to heat and I R drop in the rheostat.

If the armature shown in Fig. 120 requires 50 amperes for full load operation and the speed regulating rheostat has .5 of an ohm resistance, then the energy lost due to heat in the rheostat will be $I^2 \times R$, or $50^2 \times .5$, which equals 1250 watts.

If the field resistance were used for speed control of this motor, the losses would be much less. We will assume the field current to be 2 amperes, and the field rheostat resistance 100 ohms. Then the loss with this form of speed control would only be $2^2 \times 100$, or 400 watts.

The speed regulation of the motor which is controlled by armature resistance is very poor when the machine is operated below normal speed, while the speed rgulation of a motor controlled by the field rheostat is very good, because the armature in this case is always operated at the same voltage.

Shunt field rheostats for ordinary motors are small compact devices, because they don't need to carry a great amount of current or to have a large heat radiating surface.

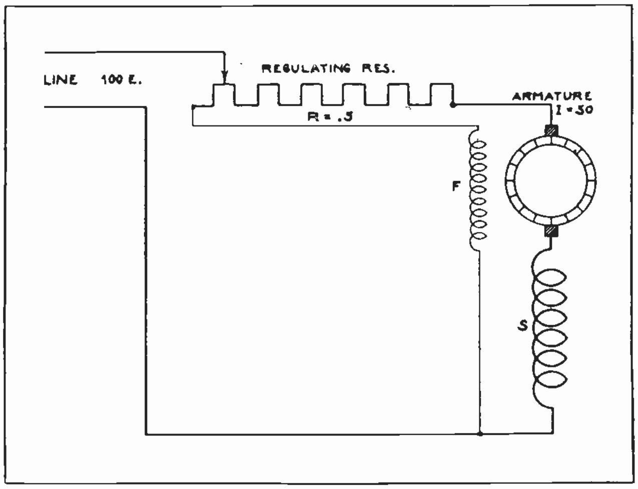

Fig. 120. Rheostats for speed regulating duty use heavier resistance units to stand the continued current load without overheating.

Armature rheostats are much larger and usually made of heavy cast iron grids, or, in the case of some of the latest type controls, they are made from alloy of manganese and copper.

From the foregoing material, it is easy to see that the use of the field rheostat provides a much more economical method of motor speed control than the use of armature resistance, and the latter should therefore be used whenever possible.

The three principal advantages of field control over armature control are as follows:

1. The horse power output remains practically unchanged with field control but decreases considerably with armature control.
2. Power lost in the field rheostat is much lower than in armature rheostats, which must carry the heavier armature current.
3. The speed regulation of a motor which is controlled by field rheostats is much better than that of a machine controlled by armature resistance.

Resistance should never be cut in to both armature and field circuits at the same time on any motor, because resistance in the armature circuit tends to reduce the speed, while resistance in the field circuit tends to increase speed. So each one would tend to defeat the purpose of the other.

Both armature and field control are often used together on the same motor, however, **cutting out** resistance from the armature circuit to bring the speed from zero up to normal, and **cutting in** resistance in the field circuit to raise the speed above normal.

152. D. C. MOTOR CONTROLLERS

There are many types of D. C. motor starters and speed controllers, but the general principles of practically all of them are very much the same. Their function is usually to place resistance in series with the motor armature when the machine is started, and gradually cut out this resistance as the machine comes up to speed.

Some controllers also make a slight variation in the resistance in the shunt field circuit at the same time the armature resistance is cut out. Some types of controls have reversing switches or contacts in addition to the rheostat element, so they can be used for starting and reversing of motors.

The operation of controllers may be either **Manual or Automatic.** In the manual types the lever arm or sliding contact which cuts out the resistance is operated by hand; while, in automatic types, the movement of the sliding contact or switches which cut out the resistance is accomplished by means of electro-magnets or solenoids, which may be operated by a small push button switch located either at the controller or some distance from it. Because of this feature, certain controllers are known as **Automatic Remote-Control** devices.

The design of the various controllers depends in each case upon the size of the motors they are to operate and upon the class of duty they are to perform.

153. CONSTRUCTION FEATURES

Common small motor controls consist of a box or panel on which are mounted the stationary contacts and sliding contact or controller arm; and usually some form of latch or holding magnet to hold the arm in running position, and frequently some form of line switch or, possibly, reversing switch.

On some of the smaller type controllers these contacts, coils, and switches are on the outside of the box or on what is called a "face plate," made of slate or insulating material.

Controllers used for small motors frequently have the resistance coils mounted inside the box, directly behind the face plate. In such cases the box is usually of well-ventilated construction, to allow the heat to escape.

On larger controllers, the resistance coils or grids are frequently located in a separate box or on a panel, and have leads of copper run from the contacts on the panel to the resistance element.

Modern automatic types of controls frequently have the entire assembly of magnets, switches, and contacts enclosed in a metal safety cabinet.

Regardless of the type or application of the controller, you shold be able to easily understand their circuits and principles, with the knowledge you already have of electrical circuits, electro-magnets, switches and rheostats.

154. THREE AND FOUR POINT STARTERS

Some of the most simple and common types of controls used with shunt and compound motors are called 3-point and 4-point controllers. The names 3-point and 4-point are derived from the number of connections or terminals on the face plate of these controllers. The 3-point control is usually arranged for starting duty only, but in some cases it may also be used for speed control, if it is properly designed.

Fig. 121 shows the wiring and electrical connections of a simple 3-point starter. In this diagram all parts and connections are in plain view and the path of the armature current is marked with solid black arrows, while the field circuit is shown by the dotted arrows. Trace this circuit out thoroughly and become familiar with the principles and operation of this fundamental type of starter.

To operate a controller of this type and start the motor, the first step will be to close the line switch

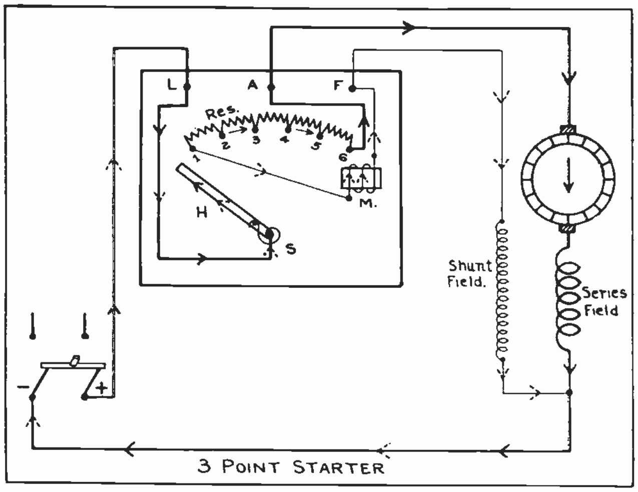

Fig. 121. This diagram shows the connections for a simple 3-point D. C. motor starter. Trace the circuit carefully with the accompanying instructions.

to apply the line voltage to the controller and motor.

You will note that one side of the line connects directly to the motor and that the controller is inserted in the other line wire, so that its resistance will affect both the armature and field circuits during starting.

The first step after closing the line switch is to move the lever arm "H" to the first point or contact attached to the left end of the controller resistance. Current will then start to flow from the opposite line wire, through the controller arm, and through the entire resistance to the motor armature and series field, and then back to the negative line wire, as shown by the solid arrows.

Another circuit can also be traced from the lever arm when it is in contact with point No. 1, as the current divides at this point and a small amount flows through the holding magnet "M", then through the shunt field winding and back to the negative line wire, as shown by the dotted arrows.

As soon as the motor starts to turn, the controller arm can be moved slowly across the contacts in order, 1, 2, 3, etc. This cuts out the resistance from the armature circuit step by step as the armature develops speed and begins to generate counter-voltage.

When the last contact point is reached, all resistance has been cut out of the armature circuit, and the lever arm will be held in this running position by the holding magnet "M", which is in series with the shunt field circuit.

155. "NO VOLTAGE" and "NO FIELD" RELEASE COIL

The reason for connecting this holding magnet in series with the motor field is to provide what is known as **"no field" protection.**

We have learned that a motor with a very weak field is likely to overspeed dangerously. This would probably be the case if an open circuit should occur in the shunt field coils or connections of a motor of this type, when it is not loaded.

However, with the holding magnet, "M", connected in series with the shunt field, if any break occurs in this circuit the magnet, "M", will be de-energized and allow the controller arm to be thrown back to the "off" position by means of a spring. This will stop the motor before it has a chance to overspeed.

This holding magnet also acts as a "no voltage" release, so that if the voltage or power supplied at the line should fail, the starter arm will be released and return to normal position and thus stop the motor.

If this protection were not provided and the controller arm were left in running position, the motor might be burned out or injured when the power came back on the line, because there would then be no resistance in series with the motor armature.

This holding magnet is often referred to as a **no-field or no-voltage release coil,** and provides this very important protection to the motor, in addition to serving its function of holding the starter arm in place.

156. ALL RESISTANCE OUT OF FIELD CIRCUIT DURING STARTING

You will note by tracing the circuit when the starter arm is in the running position, that the field current will then have to pass back through the entire armature resistance, through coil "M", and the shunt field. We find, therefore, that as the controller cuts the resistance out of the armature circuit, it places the same resistance in the shunt field circuit. The advantage of this is that it provides maximum strength of the shunt field during starting of the motor, when it is naturally desired to provide the best possible starting torque.

As the motor comes up to speed, the shunt field strength can be reduced to normal by causing its current to flow through the armature resistance.

The value of the armature resistance in ohms is very low and it therefore doesn't affect the shunt field as much as it does the armature, because the very small current required by the shunt field doesn't create much voltage drop when flowing through this resistance.

157. STOPPING A MOTOR

To stop the motor, we should always open the line switch, which will interrupt the current flow through the armature and field, and also allow the controller arm to fall back to starting position.

Never attempt to stop a motor by pulling the controller arm back across the contacts while the line switch is closed.

This would cause severe arcing and damage to the controller contacts, which should always be kept smooth and in good condition.

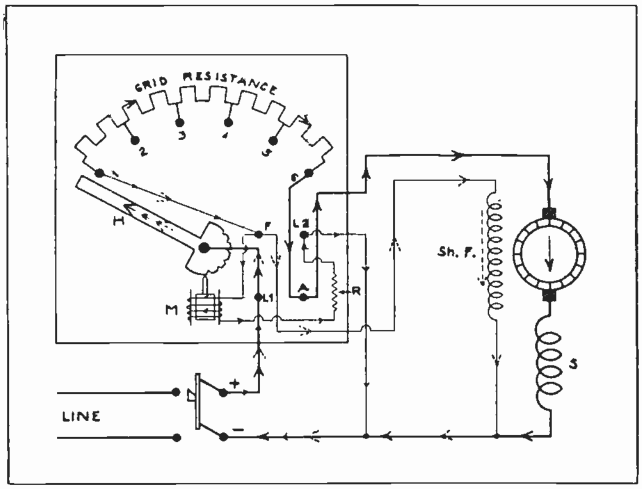

Fig. 122. Wiring diagram of a 4-point starter for speed regulating. Observe the connections and operating principle carefully.

158. STARTER TERMINALS AND CONNECTIONS

You will note in Fig. 121 that the terminals on the starter are marked L, A, and F, to indicate the connections for the line, armature, and field. This makes it a very simple matter to connect up controllers of this type to the line and motor.

The principal point to keep in mind is that one line wire should connect directly to the motor, being attached to both the shunt field and armature, or series field leads. The other side of the line should connect to the line terminal on the controller, and the remaining armature and field leads of the motor should connect respectively to the armature and field terminals on the controller. These terminals are usually marked on the controller or on the blue print supplied with it by the manufacturers.

159. SPEED REGULATING CONTROLLERS

Fig. 122 shows a 4-point controller of the type which can be used both for starting and speed regulation of D. C. motors. The resistance element of this controller is made of heavier grids of iron or nickle alloy, and is designed to carry the full armature current of the motor for indefinite periods.

The principal differences between this controller and the one shown in Fig. 121 are the larger resistance element, the use of 4 terminal points instead of 3, and the arrangement of the holding magnet, "M". With this speed-regulating controller, the lever arm and holding magnet are mechanically arranged so that the arm can be held in any position between No. 1 and 6 on the resistance contacts.

This allows the arm to be set for any desired speed of the motor. In this case, both line wires are connected to the controller terminals marked "L-1" and "L-2". The reason for connecting the negative line wire to the controller at "L-2" is merely to complete the circuit of the holding coil "M", directly across the line.

The small resistance "R" is placed in series with the magnet coil to keep it from overheating.

The armature path of current in Fig. 122 is shown by the large solid arrows, the shunt field current by the dotted arrows, and the current through the holding coil "M", by the small solid arrows. Trace each of these circuits out very carefully to be sure you thoroughly understand the operation of this controller.

Fig. 123 shows two views of a simple motor starter of the 3-point type. The view on the left shows the starter completely enclosed in the safety box with just the handle projecting from the front cover. When the cover is closed this handle connects with the sliding contact arm inside the box. The view on the right shows this arm as well as the stationary contacts and holding magnet.

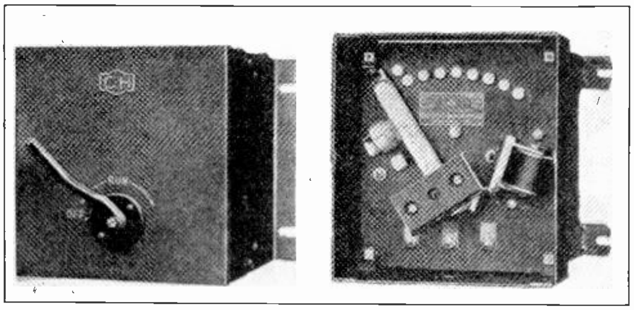

Fig. 123. Photo of a simple 3-point starter enclosed in a metal safety box.

Where small, low priced starters of the type just described are used, fuses are generally used with them to provide overload protection for the motors. Sometimes these fuses as well as the line switch are enclosed in the same box with the starter, as shown in Fig. 124..

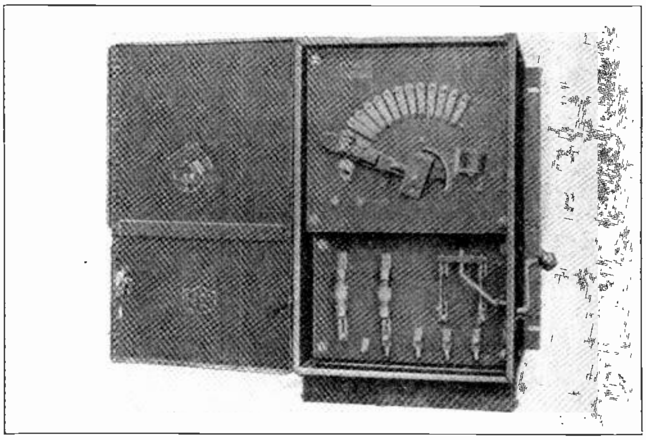

Fig. 124. Speed regulating controller with fuses and line switch enclosed in a controller box.

The switch in this case is also operated by a safety handle on the outside of the box.

Fig. 125 shows three forms of resistance elements such as are commonly used with motor starters. In the lower view, the resistance wire is wound on insulating forms of heat-resisting material, and then coated over with a plaster-like substance of the same nature. Note how a number of these coils can be mounted on a rack and spaced to allow ventilation. We can then connect several such units or coils in series or parallel, as desired, to obtain the proper resistance with convenient standard units.

The view on the upper right shows a heavy-duty resistor made in the form of grids. These grids are clamped together with bolts as shown, and are spaced with washers of porcelain or some other insulating and heat resisting material.

Resistance coils are frequently wound on tubular shapes or forms, and mounted in the starter box, as shown at the upper left in Fig. 125. The copper wires or leads shown attached to these coils are used for connecting them to the stationary segments or contacts on the starter plate.

160. CARBON PILE STARTERS

In some classes of work, such as the operation of textile mill machinery and certain other equipment, it is desirable to have very gradual application of the starting torque of the motor when the machines are first put in motion.

To accomplish this, it would, of course, be necessary to start the motor with extremely high resistance in the armature circuit, so that the starting current could be limited to only a very small fraction of the load current. For this purpose, some starters are made with resistance elements consisting of small carbon disks stacked in tubes of non-combustible material with an insulating lining, as shown in the left-hand view in Fig. 126.

As long as these carbon disks are left loose in the column or tube, the resistance through them is very high, because of the loose contact between each disk and the next. If pressure is gradually applied to the ends of this column by means of a lever and spring, this tightens the contacts between the disks and very gradually reduces the resistance through the pile.

One or more of these tubular piles or resistance elements can be arranged in a starter as shown in the right-hand view of Fig. 126; so that pressure can be smoothly applied to them by means of the lever shown in this view. Starters of this type are known as **carbon pile starters,** and they afford a means of starting motors more gradually and smoothly than with practically any other device on the market.

161. SMOOTH STARTING OF MOTORS WITH CARBON STARTERS

When using a starter of this type, there is practically no sudden increase in the starting current through the motor, as there is when the lever arm of the "step by step" starter is shifted from one contact to the next.

In addition to the pressure-applying device in starters of this type, there must also be some form of switch or contactor to short circuit the carbon piles entirely out of the armature circuit after full pressure has been applied and the machine is up to speed. The reason for using this short-circuiting switch is that the resistance of the carbon pile is still too high to leave in the motor circuit, even when the disks are under maximum pressure; and they would also tend to overheat if left in the circuit too long.

Tubes with larger disks are provided, however, for use with speed-regulating controllers, and these can be left in the circuit while the motor is running.

Two or more of these carbon pile tubes can be connected in series or parallel to obtain the proper current-carrying capacity of different controllers. If the disks become worn or damaged at any time, they can easily be replaced by removing the tubes from the controller and replacing with complete new tubes; or the end plug can be removed from any tube and the disks taken out, so that one or more of those which may be damaged or cracked can be replaced.

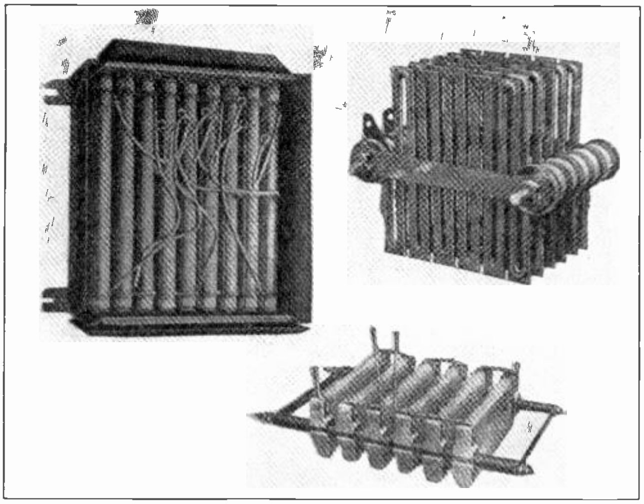

Fig. 125. Several styles of resistance units commonly used with motor starters and speed controls.

Carbon pile controllers are also made in automatic types as well as those for manual operation.

Motor controllers are made in various h. p. ratings, and when purchasing or installing them, care should be used to see that they are of the proper size to carry the current for the motor which they are operating, without overheating of the resistance elements or burning the contacts.

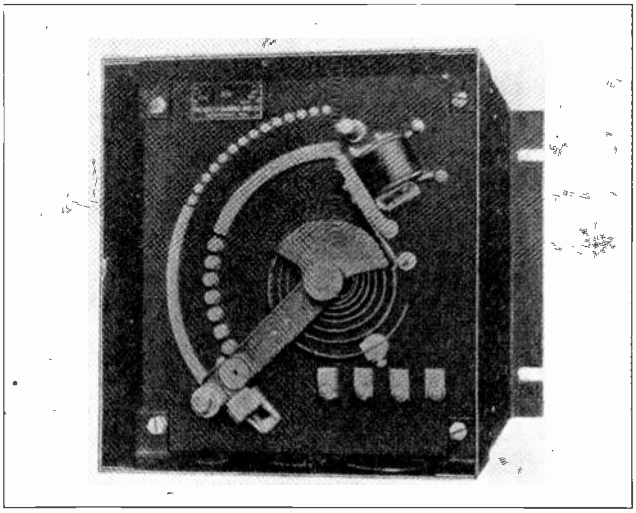

Fig. 125-A. Simple type of D. C. motor starter and speed control. Note the extra sets of contacts for the field resistance used in varying the speed.

162. CIRCUIT OF A CARBON CONTROLLER

Fig. 127 shows the circuit of a simple, manual-type, carbon pile, motor starter. In this diagram the path of the armature current is shown by the solid arrows and can be traced from the positive line wire through the armature of the starter to contact 1. From this point, the armature current flows through the lower wire to the bottom of the carbon pile, up through the carbon disks, out at the top through a flexible lead, on through the armature and series field, and back through the negative line wire.

As soon as the starter arm makes contact with 1, field current can also flow, as shown by the dotted arrows from the positive line, through the starter arm; and from contact 1 the current flows up through the curved brass strip, through the holding coil, "M"; through the shunt field; and then back through the negative line wire.

As the starter arm is moved slowly upward, it applies more and more pressure to the carbon disks by means of the hook and spring shunt shown in the figure. When the starter arm reaches contact 2, full pressure has been applied to the carbon disks; and the arm, upon touching contact 2, short-circuits the carbon pile out of the armature circuit.

The current then flows from the starter arm to contact 2, out at the armature terminal "A" through the motor, and then to the negative line wire.

163. AUTOMATIC STARTERS

As previously mentioned, a great number of motor starters and controllers are equipped with solenoids or electro-magnets which operate the switches or arms which cut out the starting resistance as the motor comes up to speed. This type of construction eliminates manual operation of the controller and reduces liability of damage to motors and controllers by improper use when controllers are operated manually by careless operators.

If a manual starter is operated too rapidly and all of the resistance is cut out before the motor comes up to speed, or if the starter is operated too slowly thus leaving the armature resistance in the circuit too long, it is likely to damage both the controller and the motor.

Automatic controllers which are operated by solenoids or electro-magnets usually have a time control device, in the form of a dash-pot attached to the solenoid or starter arm. By the proper adjustment of the dash-pot, the controller can be set so that it will start the motor in the same period of time at each operation.

Other controllers have the time period which they are left in the circuit regulated by the armature current of the motor so that the resistance cannot all be cut out of the circuit until the starting current has been sufficiently reduced by the increased speed of the motor.

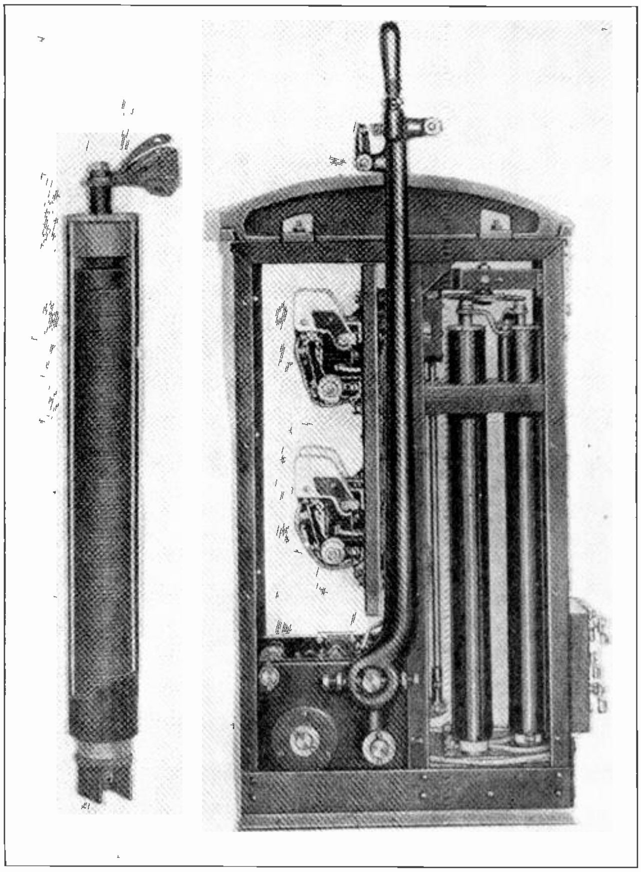

Fig. 126. Carbon-pile rheostat for starting D. C. motors very gradually. On the left is shown one of the carbon resistance elements used with such starters.

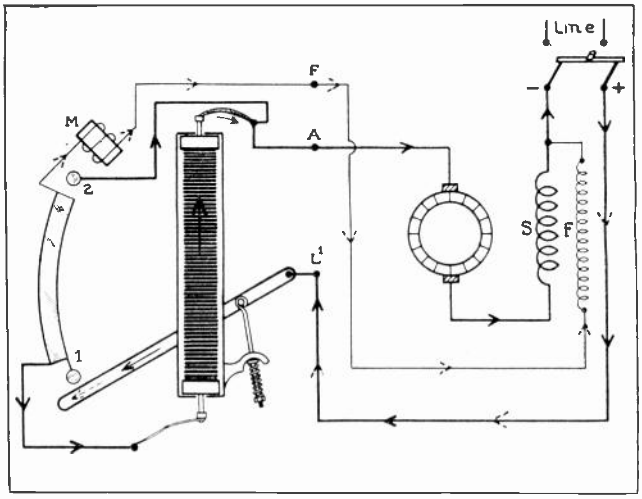

Fig. 127. Wiring diagram for a carbon-pile motor starter. Trace this circuit carefully.

164. REMOTE CONTROL

Another great advantage of magnetically operated controllers is that they can be controlled or operated from a distance by means of push-button switches which close the circuit to the operating solenoids or magnets.

For example, a motor located in one room or on a certain floor of a building can be controlled from any other room or floor of the building. Elevator controls are a good example of the use of remote control equipment. Elevator motors are usually located on the top floor of the building and are controlled by a switch in the car of the elevator which merely operates the circuits of the magnets or solenoids on controllers located near the motors.

Remote control devices can be used to improve the safety of operation of many types of machinery driven by electric motors. Push buttons for stopping and starting the motor which drives a machine can be located at several convenient places around the machine, so that they are always within reach of the operator in case he should become caught in any part of the running machinery.

Automatic and remote types of controllers are, of course, more expensive to install, but they will usually save considerably more than the difference in their first cost, by increasing the life of the motor and control equipment, and by reducing repair bills which are caused by careless operation of manual starters.

There are many types of automatic starters on the market and in use, but their general principles are very much the same; so you should have no difficulty in understanding or installing any of the common types, if you will make a thorough study of the principles covered in the following pages.

165. OPERATION OF AUTOMATIC CONTROLLERS

Fig. 128 shows a diagram of an automatic starter which uses a solenoid coil at "S" to draw up an iron core or plunger and at the same time raise the contact bar "B", which in this case takes the place of the lever arm used on the previously described controllers.

This controller is arranged for remote control by means of the stop and start push buttons shown at the upper right-hand corner. When the "start" button is closed, it completes a circuit through the solenoid coil, as shown by the small dotted arrows.

Trace the circuit of this controller in Fig. 128 very carefully while reading the following explanation.

Assuming the line switch to be closed when the start button is pressed, current will flow as shown by the small dotted arrows from the positive line wire, through the solenoid coil and contacts "B", which are closed at this time; leaving the controller at terminal 1 and passing throught the closed circuit stop switch, through the starting switch, and back to terminal 3,

From this point, it passes through a wire inside the controller to terminal L-2 and back to the negative line wire. thus completing the solenoid circuit. This energizes the solenoid coil and causes it to lift its plunger and raise the contact bar "B".

This bar is prevented from rising too rapidly by a dash-pot attached to the solenoid plunger. The dash-pot consists of a cylinder in which are enclosed a piston and a quantity of oil. As the piston rises it presses the oil before it and retards the motion of the plunger, allowing it to move upward only as fast as the oil can escape around the edges of the piston, or through a by-pass tube which is sometimes arranged at the side of the cylinders.

As soon as the solenoid plunger starts to rise, it allows the spring contact "A" to close and complete the "holding" circuit through the solenoid, without the aid of a start button.

The start button then can be released and current will continue to flow through the solenoid, as shown by the small solid arrows, causing it to continue to draw up the plunger.

As the plunger moves up a little further, the copper contact bar "B" touches the contact finger or spring 1, which connects to the first step of the armature resistance. This allows current to flow as shown by the large solid arrows, from the positive line wire and line terminal "L-1", through the flexible connection to bar "B", contact spring No. 1, then through the full armature resistance to armature terminal "A", series field, motor armature, back to terminal "L-2", and the negative line wire.

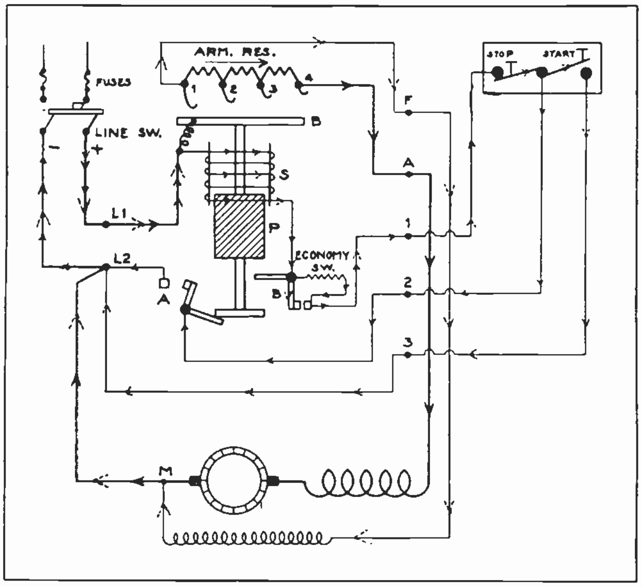

Fig. 128. This diagram shows the wiring for an automatic starter of the solenoid type. Trace each circuit until you thoroughly understand the operation of this controller.

A circuit can also be traced throught the shunt field of the motor, as shown by the large dotted arrows.

As the solenoid continues to draw the plunger slowly upward, the bar "B" next makes contact with springs 2, 3, 4 in succession, thus short circuiting and cutting out the armature resistance one step at a time.

When the bar touches contact spring 4, the current will flow directly from the bar to terminal "A", and through the motor armature, without passing through any of the starter resistance.

166. ECONOMY COIL

The small auxiliary switch shown at "B" in Fig. 128 is for the purpose of cutting a protective resistance in series with the solenoid coil, after the plunger has been raised to the top of its stroke. When the plunger reaches this point, it will lift the arm of this switch, causing the contacts to open.

The current required to hold the plunger in position once it is up is much less than the current required to start it and pull it up. This smaller holding current will flow through the economy resistance, instead of through the contacts at "B", as it did while starting.

Cutting in this economy resistance not only saves current but prevents the solenoid coil from becoming overheated when it holds the controller in operation for long periods. The economy resistance will usually reduce the current flow through the solenoid coil to one-half or less than one-half its value during starting.

167. STOPPING THE MOTOR

To stop the motor with a controller of this type, it is only necessary to press the stop button. This breaks the holding circuit through the solenoid coil and allows the plunger to fall. The plunger is permitted to fall rapidly by means of a flap valve, which allows the oil to escape rapidly when the piston moves in a downward direction. When the plunger reaches the bottom of its stroke, it trips open the switch "A" in the holding circuit; so it will then be necessary to close the starting switch to energize the solenoid once more. The motor can also be stopped by opening the line switch.

Fig. 129 shows the front view of a solenoid-type starter very similar to the one just described. The spring contact-fingers which cut out the armature resistance are slightly different on this starter than on the bar and spring type illustrated in the diagram, but their electrical principle is identically the same.

Beneath the solenoid in Fig. 129 can be seen the oil dash-pot which slows the operation of the plunger, and on the left side of this dash-pot is

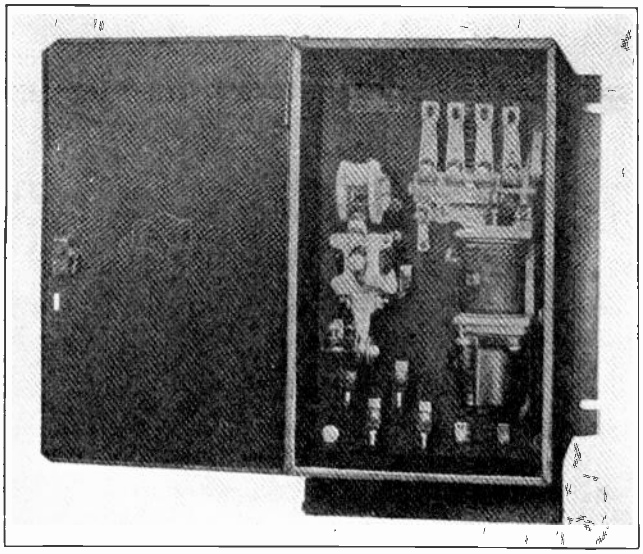

Fig. 129. Photo of a solenoid operated motor starter. Note the arrangement of the contact fingers and also the main line contactor on the left, and the oil dash-pot on the solenoid.

shown a small adjusting screw by which the speed of the plunger operation can be varied as desired.

Fig. 130 shows several types of push-button stations such as are used with remote controllers.

168. DASH-POTS FOR TIME DELAY ON CONTROLLERS

Fig. 131 illustrates the principle of the dash-pot timing device used with many automatic starters. When the plunger rod "R" is drawn up by the solenoid, the piston on the lower end of this rod lifts the oil by the suction of the piston and forces it through the needle valve "V", and around into the lower part of the cylinder.

The speed with which the plunger will rise can, therefore, be adjusted by means of the screw of the needle valve, which will allow the oil to pass more or less rapidly through this opening.

During the period that the piston is lifting against the oil, the disk "D" holds tightly against the openings or ports at "P" in the piston. When the line switch is opened or the stop button is pressed, allowing the plunger to fall, the pressure on the under side of the piston forces the disk "D" to open the ports at "P", and allows the plunger to fall very rapidly.

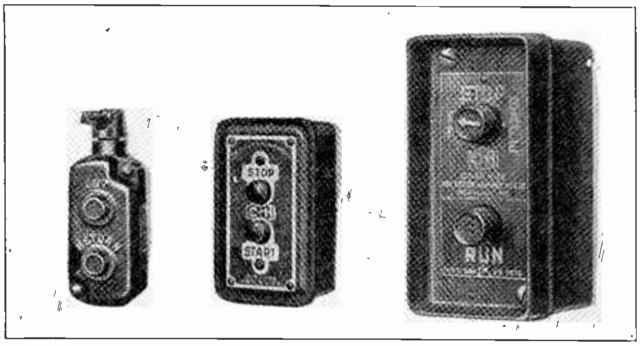

Fig. 130. Several types of push-button stations used with automatic remote controllers.

This dash-pot time-delay device should be carefully adjusted, according to the load on the motor and the time required for the motor to accelerate this load to full speed.

169. MAGNETIC STARTERS

The term **magnetic starter** is commonly used to apply to starters on which the operation depends almost entirely on relays, although they may have either a solenoid or an electro-magnet for overload protection.

Controllers of this type have a number of separate contactors, each operated by its own electro-magnet. These contactors and their circuits are so arranged that they operate in succession, and thus gradually short out resistance from the motor armature circuit.

Controls of this type are used very extensively on large industrial motors, steel mill motors, elevator motors, etc.

On medium-sized motors, the controller mechanism and contactors are often assembled inside the metal box or cabinet. For very large motors the contactors and magnets are usually assembled on a panel similar to a switchboard, and the resistance grids or elements are generally located at the rear of this panel, either on the floor or in a special rack above.

Fig. 132 shows a diagram of a magnetic controller. This controller operates as follows:

After closing the line switch, either of the start buttons at the remote control stations can be pressed to close a circuit through the remote control relay "A", as shown by the small dotted arrows.

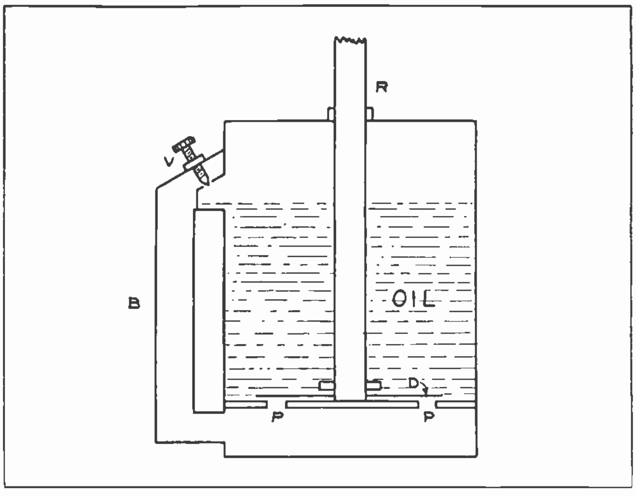

Fig. 131. The above sketch illustrates the principle of an oil dash-pot used as a time control on motor starters.

This relay magnet then attracts its double armature and closes contacts 1 and 2. Contactor 2 completes a holding circuit through relay "A" in series with the stop switches of the remote control stations. This circuit is shown by the small solid arrows.

The same contactor, No. 2, also completes a circuit through relay "B", as shown by the small curved arrows.

The current for this relay passes through the lower portion of the armature resistance and doesn't close contactor 4 immediately. Current for coil "B" is limited by the voltage drop in the armature resistance.

Contactor 1, which was operated by relay "A", closes a circuit through the overload release coil, "O. L.", to the motor terminal "M", as shown by the large dotted arrows. At this point the current divides and passes through both the armature and field circuits in parallel, and through the controller back to the negative line wire.

The armature current shown by the solid black arrows returns through the terminal "A-1" on the controller, through the winding of relay "F" and armature starting resistance in parallel. This current divides through the relay winding and armature resistance in proportion to the resistance of each path. As the relay winding is of much higher resistance than the armature resistance unit, most of the current will pass through the armature resistance and back to the line. However, enough current flows through the winding of relay "F" to cause it to become energized and close contactor 3, which short circuits the field rheostat, "F R", cutting this resistance out of the shunt field circuit of the motor.

The armature resistance used with this controller performs the same function as with any other type, namely that of causing a voltage drop and reducing the current flow through the motor armature during starting.

When contactor 3 is closed, the shunt field of the motor is connected directly across full line voltage, thus allowing the shunt field to receive full strength current and produce the good torque necessary for starting.

170. TIME OF STARTING DEPENDS ON STARTING CURRENT

We recall that relay "B" didn't energize when the circuit through its coil was first closed because it is in series with about one-third of the armature resistance. Therefore, as long as the heavy starting current is flowing through this armature resistance and causing considerable voltage drop, part of that voltage drop being in series with the coil of relay "B", limits its current and prevents it from becoming strong enough to close its armature.

As the motor comes up to speed and develops counter-E. M. F., thereby reducing the starting current through the armature resistance, this will also reduce the voltage drop through that section of the resistance which is in series with coil "B". This allows the current through coil "B" to increase slightly and causes it to close contactor 4. When this contactor closes it places a short circuit on the coil of relay "F", which can be traced from X to X-1, and

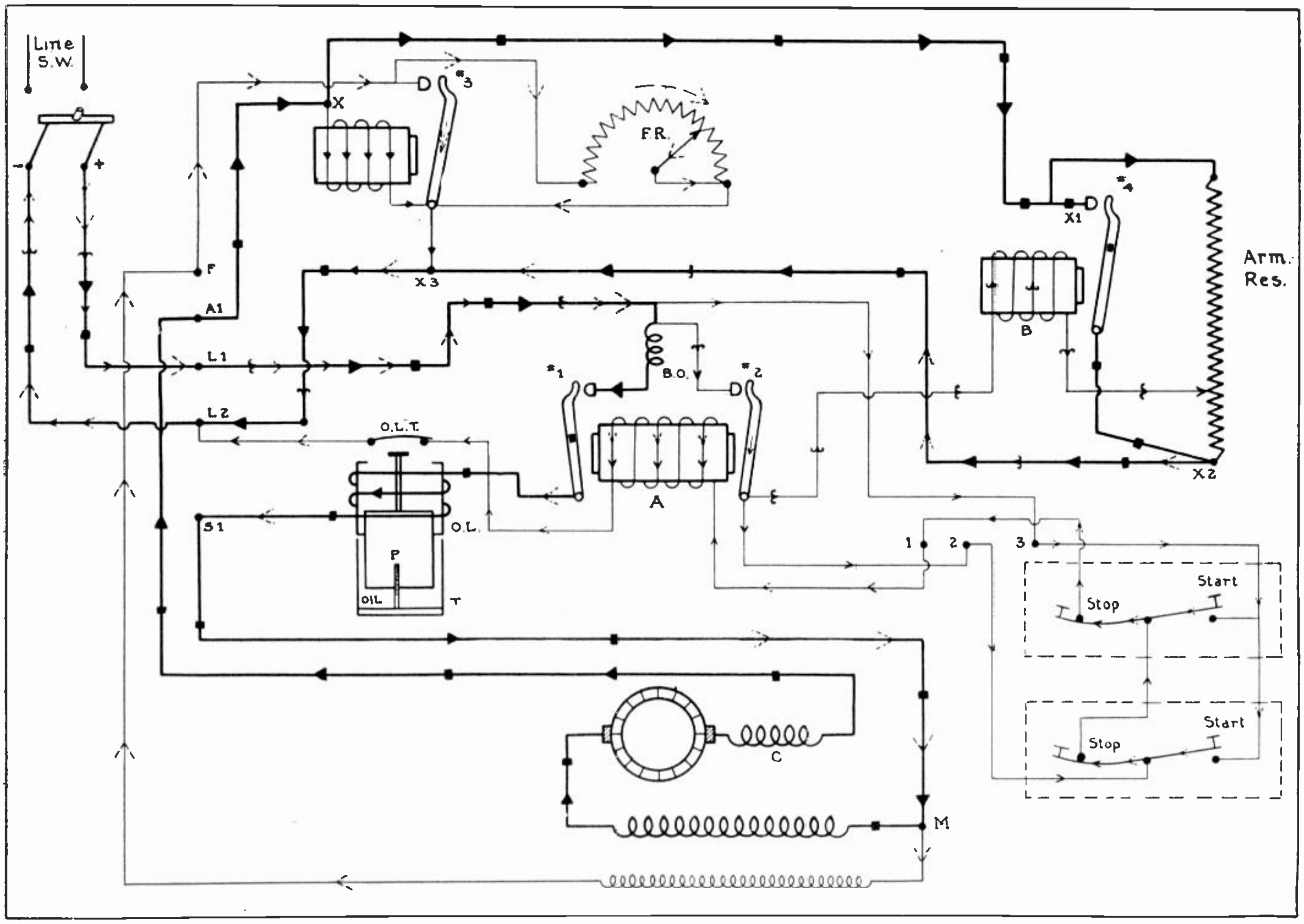

Fig. 132. This diagram shows the complete wiring of a modern magnetic type controller. You will find it very interesting and exceedingly well worthwhile to trace each circuit and obtain a thorough understanding of the operating principles of this starter.

X-2 to X-3. This shorts the current around the coil of relay "F" and causes it to de-energize and release contactor 3.

When this contactor opens, it releases the short circuit on the field rheostat, "F. R." and places this resistance back in series with the shunt field of the motor. This allows the motor speed to make its final increase for the starting operation, and also allows the field rheostat to be used for regulating the speed of the motor.

Contactor 4 is adjustable and can be set to pull in on any desired voltage within the range of this controller. By adjusting the screws to allow the relay armature to normally rest farther away from the core, it will require a higher voltage to operate this contactor.

This means that the motor will have to reach a little higher speed, develop more counter-E. M. F., and further reduce the starting current flowing through the armature resistance, and thereby reduce the voltage drop, allowing a higher voltage to be applied to the coil of relay "B" before it will operate.

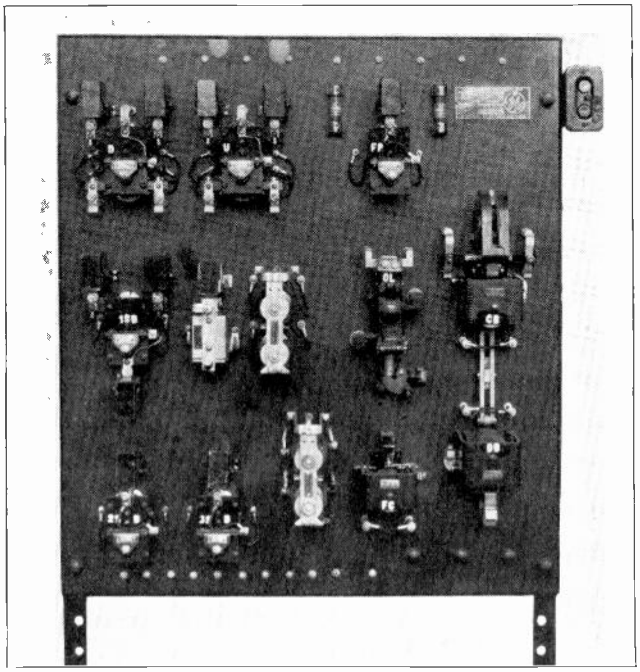

Fig. 132-A. This photo shows the manner in which the magnetic contactors of industrial controls of the larger type are often mounted on an open panel.

When this relay does operate, it short-circuits the armature resistance completely out of the motor circuit by providing a path of copper around the resistance from X-1 to X-2. So we find that the time delay on this relay and controller depends upon the reduction of the starting current through the motor armature and the armature resistance of the controller.

Therefore, if the motor is more heavily loaded at one time of starting than at another and requires longer to come up to full speed and develop the proper counter-voltage, this controller will automatically leave the armature resistance in series that much longer. For this reason it is a very practical and dependable type of control.

After the motor is up to full speed and the controller starting operation completed, the armature current will then be flowing through the circuit as shown by the square dots.

171. OVERLOAD PROTECTION

In tracing this circuit you will find that the armature current passes continuously through the coil of the overload relay "O. L." as long as the motor is in operation.

The purpose of this overload relay, which is included with many controllers of this type, is to protect the motor from overload, both during starting and while the motor is running at full speed.

The coil of this relay is in series with the motor armature and therefore consists of a very few turns of heavy conductor capable of carrying the full armature current for indefinite periods.

If an overload is placed on the motor, thereby increasing its armature current, the increased current will increase the strength of the coil of the overload-relay solenoid.

This will cause it to draw up the plunger "P" slowly against the action of the oil in the dash-pot "T". This dash-pot can be so adjusted that it will require more or less time for the plunger to complete its upward stroke, and so that an overload which only lasts for an instant does not raise the plunger far enough to stop the motor.

The dash-pot is often called an inverse time limit device, because the time required to draw up the plunger is inversely proportional to the current or amount of overload on the motor. A severe overload

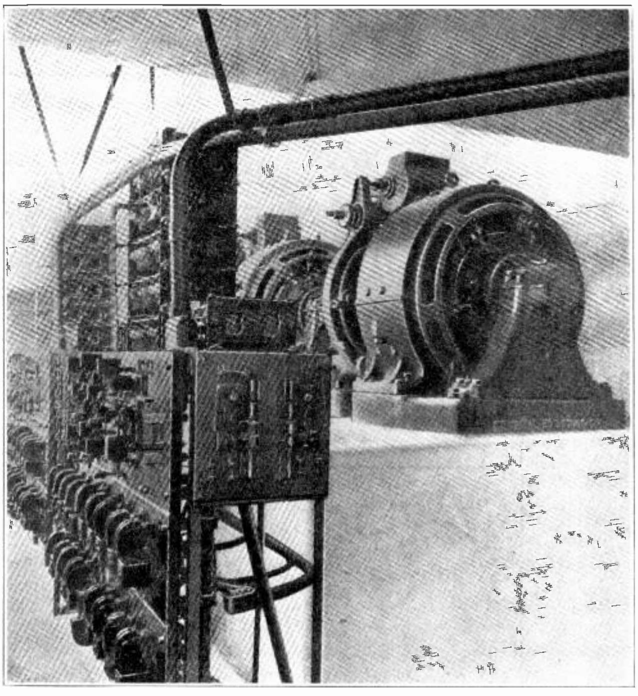

Fig. 132-B. Photo of the control panels for a group of elevator motors. Note the contactors on the face of the panel and the resistance grids located above.

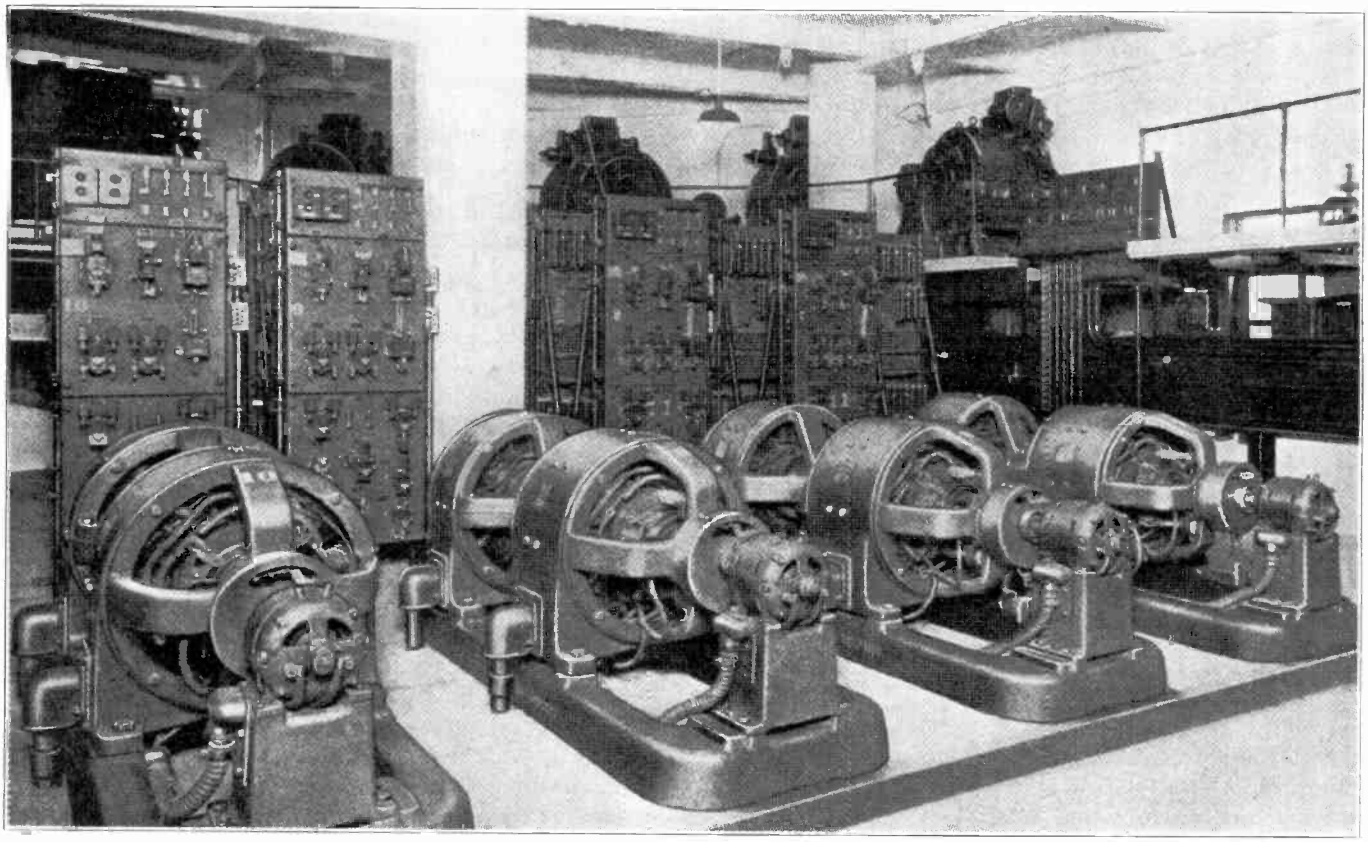

Fig. 132-C. This view shows the control panels for a group of modern elevator machines of the motor-generator type. The magnetic contactors on these panels are operated by remote control from the elevator car.

increases the strength of the coil to such an extent that the plunger will come up very quickly.

If the overload remains on the motor, the plunger will be drawn up completely until it strikes the overload-trip-contact, "O. L. T.". This opens the circuit of the relay coil "A", allowing it to release both its armatures and contactors 1 and 2.

When contactor 1 is opened, it disconnects the motor from the line, and 2 breaks the holding circuit of coil "A", requiring it to be closed again, by means of the start buttons, after the overload on the motor is removed.

172. "BLOW-OUT" COIL

The magnetic blow-out coil, "B. O." is for the purpose of providing a strong magnetic flux for extinguishing the arc drawn at contactor 1 when the motor circuit is broken at this point.

The action of this blow-out coil is purely magnetic. The few turns of which it consists are wound on a small iron core, which has its poles placed on either side of the contacts where the circuit will be broken. This provides a powerful magnetic field at the exact point where an arc would be formed when the circuit is broken by this contactor.

As the arc is in itself a conductor of electrical current and has a magnetic field set up around it, this field will be reacted upon by the flux of the blow-out coil and cause the arc to become distorted or stretched so that it is quickly broken or extinguished. This prevents the arc from lasting long enough to overheat and burn the contacts to any great extent.

Regardless of the extent of the overload, the magnetic blow-out coil is very effective, because the entire load current of the motor flows through its turns and its strength is therefore proportional to the current to be interrupted at any time.

Fig. 133 illustrates the principle and action of this blow-out coil on an arc drawn between two contacts which are located between the poles of the magnet.

In the view at the left, the solid lines between the contacts "A" and "B" represent the arc and the current flowing through it, while the dotted lines between the magnet poles represent the strong flux which is set up by them.

In the view at the right, the circle and dot represent an end view of the arc, and the direction of the flux around the arc is shown by the three arrows. The dotted lines show the magnetic flux from the poles of the blow-out magnet.

By noting the direction of this flux and that around the arc, we find that the lines of force will tend to be distorted as shown, and will stretch the arc out of its normal path in the direction shown by the dotted arrow.

The circuit of a controller such as shown in Fig. 132 may at first seem rather complicated, but you will find after carefully tracing through each part of it several times, that its operation is exceedingly simple. It is only by tracing such circuits as these, both in the diagrams and on the actual equipment, that you will be able to fully understand the operation of controls of this type and become competent in testing their circuits to locate any troubles which may develop in them.

This diagram and the explanation given in the accompanying paragraphs are, therefore, well worth thorough and careful study.

The controller shown in Fig. 132 uses a field rheostat for controlling the speed of the motor. This rheostat can be adjusted, or set at various points, by hand.

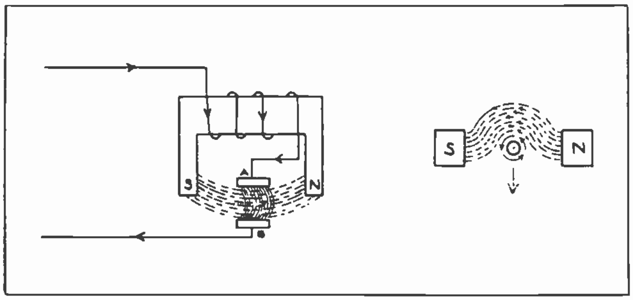

Fig. 133. The above sketch illustrates the principle by which the magnetic blow out coil extinguishes arcs on controller contacts.

Fig. 134 shows a magnetic type of controller very similar to the one shown in Fig. 132. The several magnetic contactors and overload trip coil can be seen mounted on the panel in the cabinet. This view, however, does not show the field rheostat for speed regulation.

173. DRUM CONTROLLERS

Drum controllers are very extensively used in the operation of D. C. motors where it is required to be able to start, stop, reverse, and vary the speed of the motors. The name **drum controller** comes from the shape of this device, and the manner in which the contacts or segments are mounted on a shaft or drum. This cylindrical arrangement of the contacts is made in order that they may be rotated part of a turn in either direction and brought into connection with one or more sets of stationary contacts.

Drum controllers are usually manually operated and can be provided with almost any number and desired arrangement of contacts. Drum controls are extensively used for controlling the motors used on street cars and electric trains, cranes, hoists and machine-tool equipment, where it is necessary to be able to reverse and vary the speed of the motors.

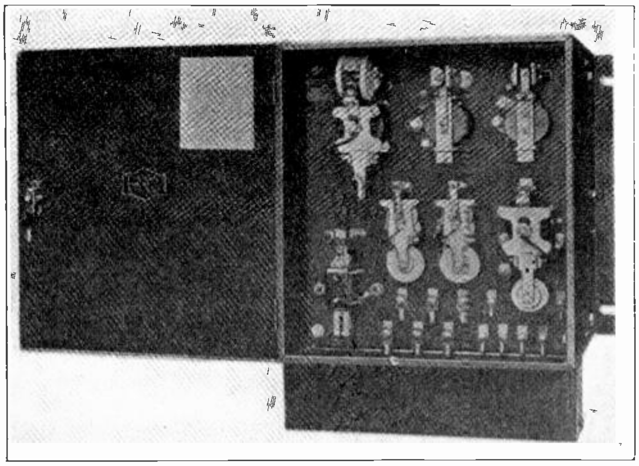

Fig. 134. Photo of an enclosed type magnetic starter for small and medium sized motors.

174. OPERATION OF SIMPLE DRUM CONTROL

Fig. 135 shows a very simple form of drum control and illustrates the manner in which the movable drum contacts can be used to short out the armature resistance step by step from the motor circuit. When the drum shown in this figure is rotated the first step and brings the movable segments "A" and "B" into connection with the stationary contacts, current will start to flow through the entire set of resistance coils, through segments "B", and the jumper which connects it to "A", through segments "A" to contact 1; then through the motor armature and back to the negative side of the line.

When the drum is rotated another step to the left, segment "C" touches contact 3, and as "C" is connected to "B" by the jumper, this short circuits the resistance between contacts 3 and 2.

Rotating the drum two more steps will short out the remaining two sections of resistance in the same order. Thus a simple drum-control can be used to gradually cut out the resistance as the motor comes up to full speed.

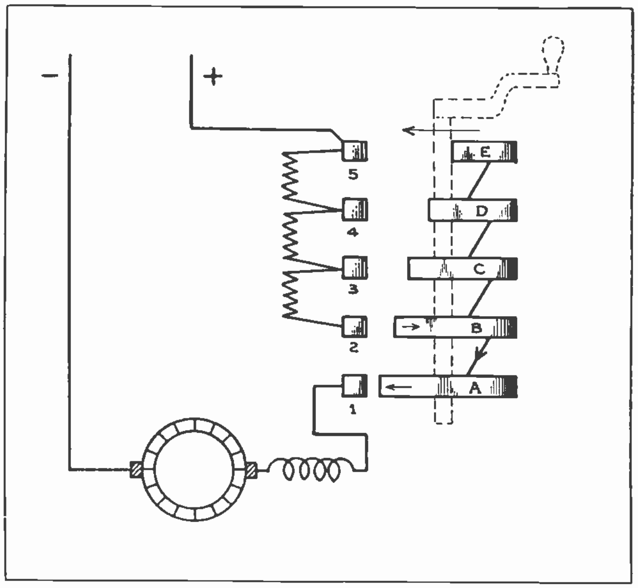

Fig. 135. Simple drum controller showing the method in which the contacts and segments cut out the armature resistance when starting the motor.

By making the resistance elements large enough to carry the motor current continuously, and the drum contacts and segments of heavy copper so they can stand the arcing and wear caused by opening and closing the motor armature circuit, this type of drum controller can be used for speed-regulating duty as well as for starting.

The motor used with this controller in Fig. 135 is a straight series motor similar to the type used on street cars and traction equipment.

175. REVERSING ROTATION OF MOTORS

We have learned that, in order to reverse a D. C. motor, it is necessary to reverse either the field or the armature current. Some controllers are connected to reverse the field of a motor, while others reverse the armature. On ordinary shunt motors the field is usually reversed, but with compound motors it is necessary to reverse both the shunt and series field if this method of reversing the motor is used.

So, for motors of this type, it is common practice to reverse the armature and leave both the shunt and series fields remain the same polarity. To reverse the armature leads will require only two extra contacts on the controller, while it would require four contacts to reverse both the series and shunt field leads.

When the direction of rotation of a compound motor is changed by reversing the field, both the series and shunt field leads should always be reversed; because if only one of these fields were reversed the motor would be changed from cumulative to differential compound.

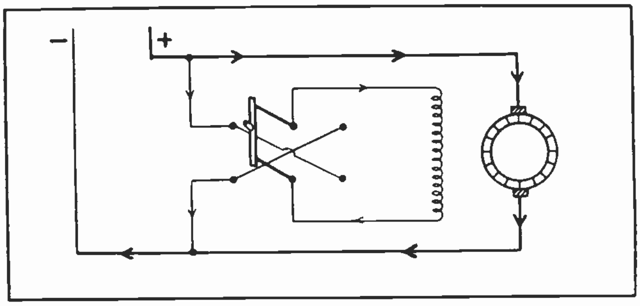

Fig. 136. The above sketch shows the manner in which a motor can be reversed by reversing its field with a double-pole, double-throw knife switch.

Fig. 136 shows the manner in which a simple double-pole, double-throw, knife switch can be used to reverse a shunt motor by reversing the connection of its field to the line.

When switch blades are closed to the left, current will flow through the shunt field in the direction shown by the arrows. If the switch is thrown to the right, the current will flow through the field in the opposite direction, as can readily be seen by tracing the circuit through the crossed wires between the stationary clips. This same switching method can, of course, be used to reverse the connections of the armature to the line, if desired. This reversing switch effect can be built into a drum controller by the proper arrangement of its contacts.

176. REVERSING DRUM SWITCHES

Fig. 137 shows a simple reversing drum-control used for reversing the direction of current through the armature only. This diagram doesn't show the starting resistance or contacts, but merely illustrates the principle or method by which several of the contacts on a drum controller can be used for a reversing switch.

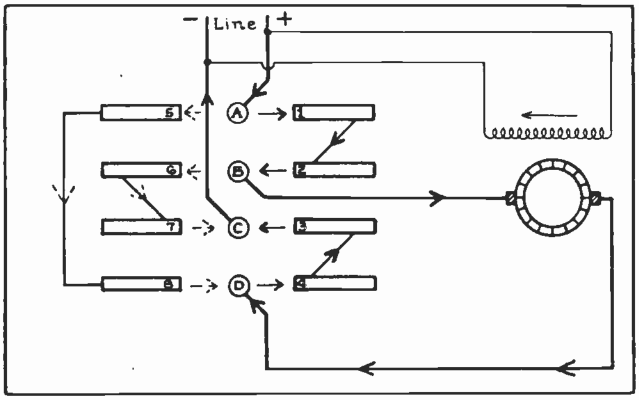

Fig. 137. Drum control with the contacts arranged to reverse the direction of current through the armature and thereby reverse the motor.

The drum control shown in Fig. 137 has one set of stationary contacts—A, B, C, and D, and two sets of moving segments or contacts, Nos. 1 to 8. These two sets of moving contacts are mounted on the same drum and both revolve at the same time, but in diagrams of this sort these parts are shown in a flat view in order to more easily trace the circuit.

If this drum is revolved clockwise when looking at it from the top or middle, the movable contacts 1, 2, 3, and 4, will be brought into connection with the stationary contacts A, B, C, and D. The current flow through the armature can then be traced by the solid arrows, from the positive line wire to stationary contact "A", movable segment 1, through the jumper to movable segment 2, stationary contact "B", through the armature in a right-hand direction, then to stationary contact "D", movable segment 4, through the jumper to movable segment 3, stationary contact "C"; and back to the negative line wire.

If the controller is revolved counter-clockwise, the movable segments 5, 6, 7, and 8 will be brought into connection with the stationary contacts, and the armature current will then flow as shown by the dotted arrows. The field of the motor is left the same polarity and only the armature circuit is reversed. If the field and armature of a motor were both reversed at the same time, the direction of rotation would still remain the same.

177. REVERSING DRUM CONTROLLERS

Fig. 138 shows a drum controller which is used for starting a D. C. motor, as well as for reversing duty. This controller has two sets of stationary contacts and two sets of movable segments. The diagram also shows the armature resistance used for starting the motor and while it is being brought up to speed. The contacts and parts of this drum are also laid out in a flat view in the diagram.

The two sets of movable segments are arranged on opposite sides of the drum, as are the stationary contacts. This is illustrated by the small sketch in the lower left-hand corner, which shows from a top view the position of the contacts at the time segments 1 to 5 are approaching the stationary contacts, "P" to "U".

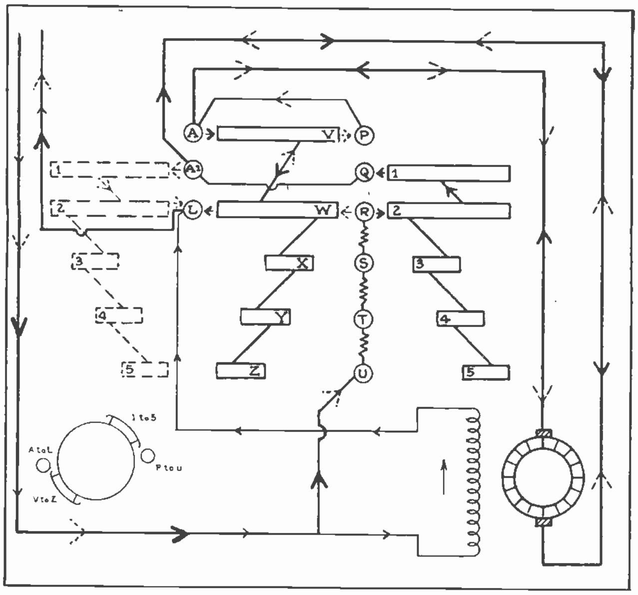

Fig. 138. Wiring diagram of a drum controller for starting and reversing shunt motors.

Now, suppose we move the drum of this controller so it will shift both sets of movable segments to the left in the flat diagram. The first step of this movement will bring movable segments 1 and 2 into connection with stationary contacts "Q" and "R", and will also bring segments "V" and "W" into connection with stationary contacts "A" and "L". "A" circuit can then be traced, as shown by the solid arrows, from the positive line wire to stationary contact "U", through all of the armature resistance to stationary contact "R", movable segment 2, through the jumper to movable segment 1, stationary contact 2 to stationary contact A-1; then through the motor armature, back to stationary contact "A", movable segments "V" and "W", stationary contact "L", and back to the negative side of the line.

As we advance the controller still farther in this same direction, the successive steps will bring movable segments 3, 4 and 5 into connection with stationary contacts "S", "T", and "U", thus gradually shorting out the armature resistance step by step.

When the controller has been moved as far as it will go in this direction and all armature resistance has been cut out, the circuit is from the positive line wire to stationary contact "U", movable segment 5, through the jumpers and segments to movable segment 1, stationary contact 2, and on through the armature and back to the negative side of the line.

You will note that the movable segments 1 and 2, and "V" and "W" are all of sufficient length to remain in connection with the stationary contacts as they slide around and allow the step by step movement which brings the larger segments into connection with their stationary contacts.

To reverse the motor, we will now move the controller in the opposite direction, which will bring the movable segments 1 to 5 clear around on the opposite side to the position shown by the dotted segments, 1 to 5; and the movable segments "V" to "Z" will be brought into connection with stationary contacts "P" to "U".

Before attempting to trace the circuit, get well in mind the position of these movable segments in this new location. Another reference to the circular sketch in the lower corner of the figure will help you to see the manner in which the movable segments are brought up on the opposite side of the stationary contacts as the drum is revolved in the opposite direction.

We now find that, on the first step of the drum movement, the movable segments "V" and "W" will be brought into connection with the stationary contacts "P" and "R", and the movable segments 1 and 2 (dotted) will be brought into connection with stationary contacts "A-1" and "L".

We can now trace a circuit through the armature, as shown by the dotted arrows, from the positive line to stationary contact "U", through the full armature resistance to stationary contact "R", the movable segments "W" and "V", stationary contacts "P" and "A"; then through the armature in the opposite direction to what it formerly flowed, and back to stationary contact A-1; then through movable segments 1 and 2 to negative line terminal "L".

As the controller is advanced step by step in this direction, the movable segments "X", "Y", "Z" will cut out the armature resistance as the machine comes up to speed. In this position the movable segments 3, 4, and 5 will be idle.

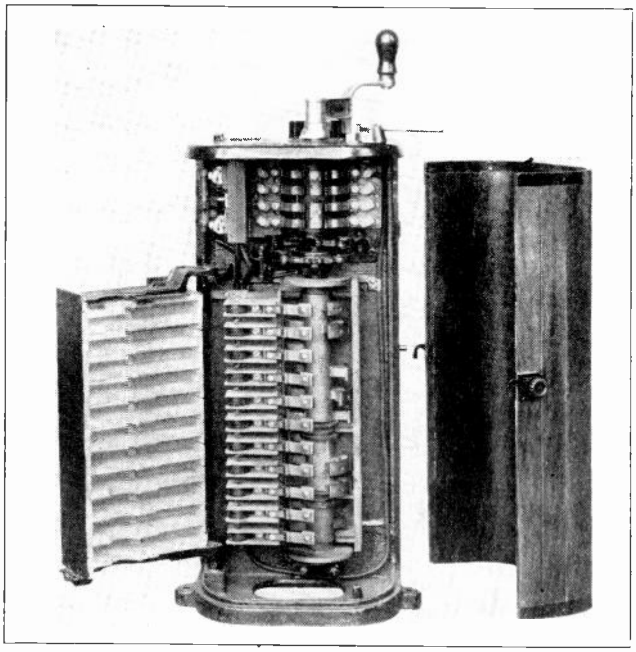

Fig. 139. The above photo shows the mechanical construction and arrangement of parts of a modern drum control. Note the flash barriers on the inner cover which is shown opened to the left.

The shunt field connections of this motor are left the same, so its polarity will remain the same at all times. Trace this diagram carefully until you are able to trace the circuit very readily in either direction or position of the control. A good knowledge of the principles and circuits of these controllers will be of great help to you in the selection of the proper controller for various applications in the field, and also in locating troubles which may occur in controllers of this type or the resistance attached to them.

178. CONSTRUCTION OF DRUM CONTROLS

Fig. 139 shows a photo of a drum controller with the cover removed so that all of the parts can be quite clearly seen. The movable segments are made of copper and are attached to the shaft, which is operated by the crank or handle.

The stationary contacts are in the form of fingers with flat springs to hold them in good contact with the segments when they are passed under these fingers. You will note that the copper shoes of the rotating segments and the individual fingers or stationary contacts are both removable, so they can easily be replaced when they are worn or burned by arcing which occurs during the operation of the controller.

These contacts should always be kept in good condition in order to assure the proper operation of the motor to which the controller is attached. At the left of the stationary contact fingers, can be seen a row of blow-out coils all of which are in series with their respective contacts and circuits. These blow-out coils, as previously mentioned, are for the purpose of extinguishing the arc drawn when the circuits are broken at the contacts.

The inner hinged cover, which is shown swung out to the left, is simply an assembly of boards or barriers made of fireproof material. When this group of barriers is swung into place, one of them comes between each stationary contact and the next. The purpose of these barriers is to prevent a flash-over or short-circuit between adjacent contacts.

This particular drum controller has a separate set of reversing contacts mounted in the top of the case and operated by a separate small handle, which is shown at the right of the main crank.

In addition to the functions of starting, reversing, and varying the speed of motors, some controllers are also equipped with extra contacts for short circuiting the armature through a resistance, in order to provide what is known as **dynamic braking.**

This form of braking, which is frequently used to stop large motors, operates on the principle of a generator, using the counter-voltage generated in the armature to force a current load through the dynamic brake resistance. This method provides a very effective and smooth braking, and will be explained more fully in later paragraphs.

179. DRUM CONTROL FOR REVERSING AND SPEED REGULATING

Fig. 140 shows a drum control which is arranged for starting, reversing, speed-regulating, and dynamic braking duty. This controller has two sets of heavy-duty segments and contacts for the armature circuit, and in the upper section are two sets of smaller contacts which are used in the shunt field circuit, and are short circuited by two large angular segments.

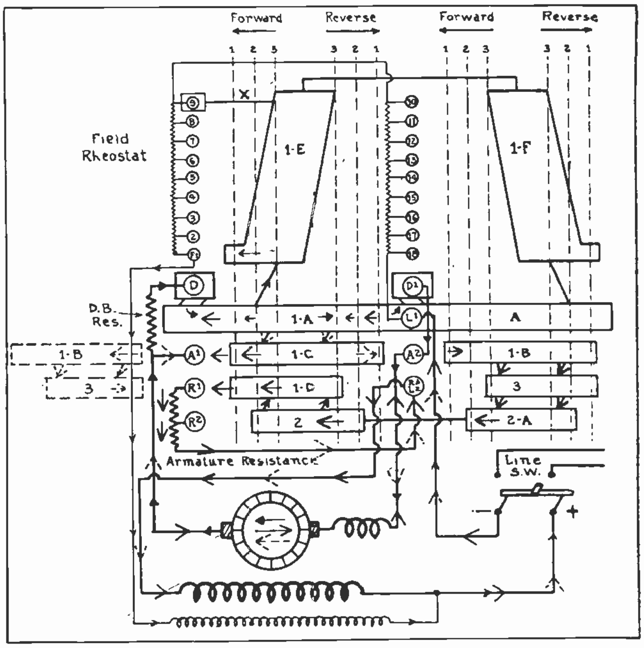

Fig. 140. This diagram shows the wiring for a drum controller used for starting, reversing, and varying the speed of a compound motor.

The shunt field resistance, or rheostat, is shown divided into two sections in the diagram; but you will note that the taps made to this resistance run consecutively from No. 1 to 18, and the resistance itself can be located all in one group and have the separate leads brought to the two rows of contacts as shown. One of the heavy-duty resistances is used for the armature during starting, and the other is used for the dynamic braking.

When this controller is operated in either direction, the first step will close the armature circuit through the armature resistance, and energize the field at the same time, thus starting the motor. As the controller is advanced step by step, the armature resistance will first be cut out and then resistance will be cut in to the shunt field circuit, causing the motor to speed up as much more as desired.

When the controller is in idle position, as shown in the diagram, the motor armature is short circuited by the small movable segments which are now resting on the contacts "D" and "D-1". These contacts are the ones used for the operation of the dynamic brake circuit.

180. FORWARD POSITION, STARTING

The long movable segment "1-A" is continuous around the drum and always makes contact with "L-1". When the controller is moved to the left one step, the movable segment "1-B" connects with the stationary terminal "A-2" in the center of the diagram, and the segments "C" and "D" connect with stationary contacts "A-1" and "R-1" at the left of the diagram.

This completes a circuit through the motor armature and full armature resistance, as shown by the larger solid arrows. In tracing this circuit, remember that this first step of movement of the controller will remove the short segments from contacts "D" and "D-1", thus breaking the short circuit on the armature.

The armature circuit which has just been closed can be traced from the positve line wire to "L-1", to the left through segment "1-A", through the jumpers to segment "1-C", then to terminal "A-1", and through the armature in a right-hand direction, on to terminal "A-2", segment "1-B", through the jumpers and segments 3 and 2-A of the right-hand group, through jumpers and segments 2 and 1-D of the left group, then to contact "R-1", through all of the armature resistance, to the contact which is marked "R-3" and "L-2"; then through the series field winding and back to the negative side of the line.

This first step or movement of the controller also causes the approaching tip of the large angular segment "1-E" to connect to contact "F-1" and close a circuit directly through the shunt field of the motor, without any resistance in series. This circuit can be traced from the positive side of the lines to contact "L-1", segment "1-A", jumper, segment "1-E", contact "F-1", and then through the shunt field winding and back to the line.

When the controller is advanced another step, segment 2 of the left group connects with contact "R-2", and cuts out the upper section of the armature resistance. When the controller is moved still another step, segment 3 of the right-hand group connects with the contact which is marked "R-3" and "L-2", and cuts out the entire armature resistance.

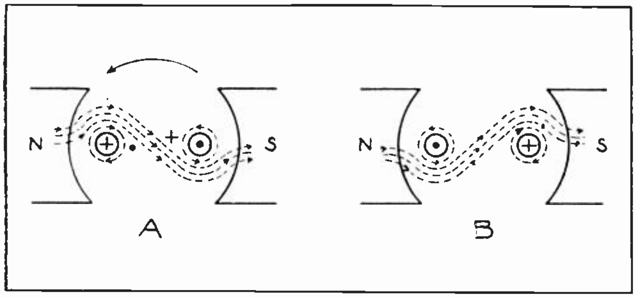

Fig. 141. The above sketch illustrates the principle of dynamic brake action in a motor when its armature is short circuited.

By checking the circuit again with the controller in this position, you will find that a circuit can be traced from the line through the controller and the motor armature, back to the line, without passing through the armature resistance.

The dotted lines which run vertically through the controller and are numbered 1, 2, 3 at their top ends, show which segments make connection with the stationary contacts on the first, second, and third steps of either the forward or reverse rotation of the controller.

For example, the dotted lines No. 1 in both forward groups touch only the segments which will connect with the stationary contacts on the first joint of the controller. The dotted lines No. 2 run through the segments which will connect with the stationary contacts on the second step of the controller. Etc. The dotted lines in the columns marked "reverse" show which segments make contact in order when the controller is moved in the reverse direction.

So far we have moved the controller only three steps to the left or in the forward direction, and we find that this has cut out all of the armature resistance and brought the motor up to approximately normal speed.

181. SPEED CONTROL

During these three steps or movements, the large angular segment "1-E" has been moving across contacts 1 to 9 of the shunt field resistance. These contacts are all shorted together by the segment "1-E", but this makes no difference, because they are not in the field circuit after the first step of the controller.

When the controller is moved the fourth step to the left, the lower end of segment "1-E" will have passed clear across the stationary contacts, and its lower right edge will begin to leave these contacts in the order —1, 2, 3, etc. This begins to cut in resistance in series with the shunt field winding of the motor, thus increasing the speed of the machine as much as desired.

During the time that segment "1-E" has been breaking away from contacts 1 to 9, the segment "1-F" has been moving across contacts 10 to 18; and after the upper right-hand corner, or segment "1-E", has cut in the last step of the resistance from 1 to 9, the segment "1-F" starts to cut in the resistance in the steps from 10 to 18. This gives a wide range of speed variation by means of the shunt field controller. The shunt field circuit is traced with the small solid arrows through the controller for the first position only.

182. REVERSE POSITION

To reverse the motor, the controller will be returned to neutral or "off" position, and then advance step by step in a right-hand direction. As the controller advances the first step in this direction, the right-hand ends of the movable segments will make connections with the groups of stationary contacts opposite to which they were connected before.

This means that segments "1-B" and 3 will have passed around the drum and will approach contacts "A-1" and "R-1" from the left, as shown by the dotted segments "1-B" and 3; and segments "1-C" and "1-D" will approach contacts "A-2" and "R-3" from the left.

With the controller in the first step of this reversed position, current can be traced through the armature by the dotted arrows, and we find it is in the reverse direction to what it formerly flowed through the motor armature.

This circuit is traced from the positive line wire to "L-1", segment "1-A", jumpers and segment "1-C" to contact "A-2", and then through the armature to the left, to contact "A-1", segments "1-B" and 3, contact "R-1", through the full armature starting resistance to contact "L-2"; then through the series field in the same direction as before and back to the negative line wire.

In tracing this circuit, we find that the direction of current through the armature has been reversed but that it remains the same through the series field winding. It is necessary to maintain the polarity of the series field the same in either direction of rotation, in order to keep the motor operating as a cumulative compound machine.

If the controller is advanced in the reverse direction, the additional steps will cut out the armature resistance and begin to insert resistance in the shunt field circuit, the same as it did in the former direction.

183. DYNAMIC BRAKING

When the controller shown in Fig. 140 is brought back to neutral or off position, we find that the short movable segments directly above the long segment "1-A" will be brought to rest on contacts "D" and "D-1", thus short-circuiting the motor armature through the dynamic braking resistance, contact "D", segment "1-A", contact "D-1", and the commutating field.

When the current is shut off from the motor armature by bringing the controller to the "off" position, if the motor is a large one or if the load attached to it has considerable momentum, the motor and machine or car which it is driving, will tend to keep on moving or coasting for some time before coming to a complete stop.

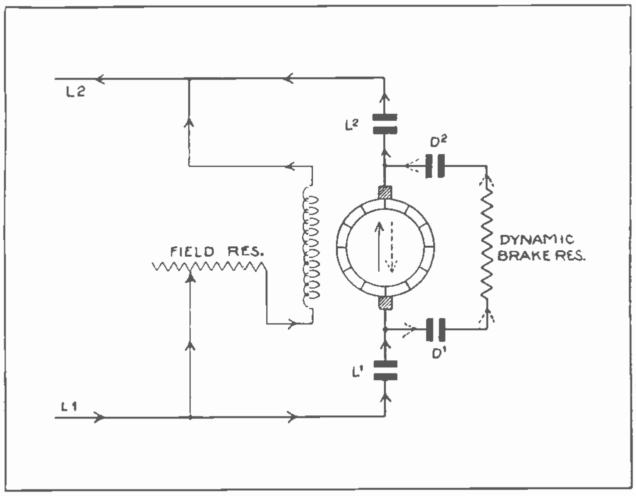

Fig. 142. Diagram showing connections and contacts used for switching a dynamic brake resistance across the armature of a D. C. motor when the line is disconnected.

If we leave the shunt field excited during this period, the motor armature will continue to generate its counter-voltage as long as it is turning. Then, if we short circuit the armature through the dynamic brake resistance, this counter-voltage will force a heavy load of current to flow and the coasting motor armature will act as a generator.

We know that it requires power to drive a generator armature; so, when this short or load is placed on the motor armature, the energy of its momentum is quickly absorbed by the generator action, thus bringing the armature to a smooth, quick stop.

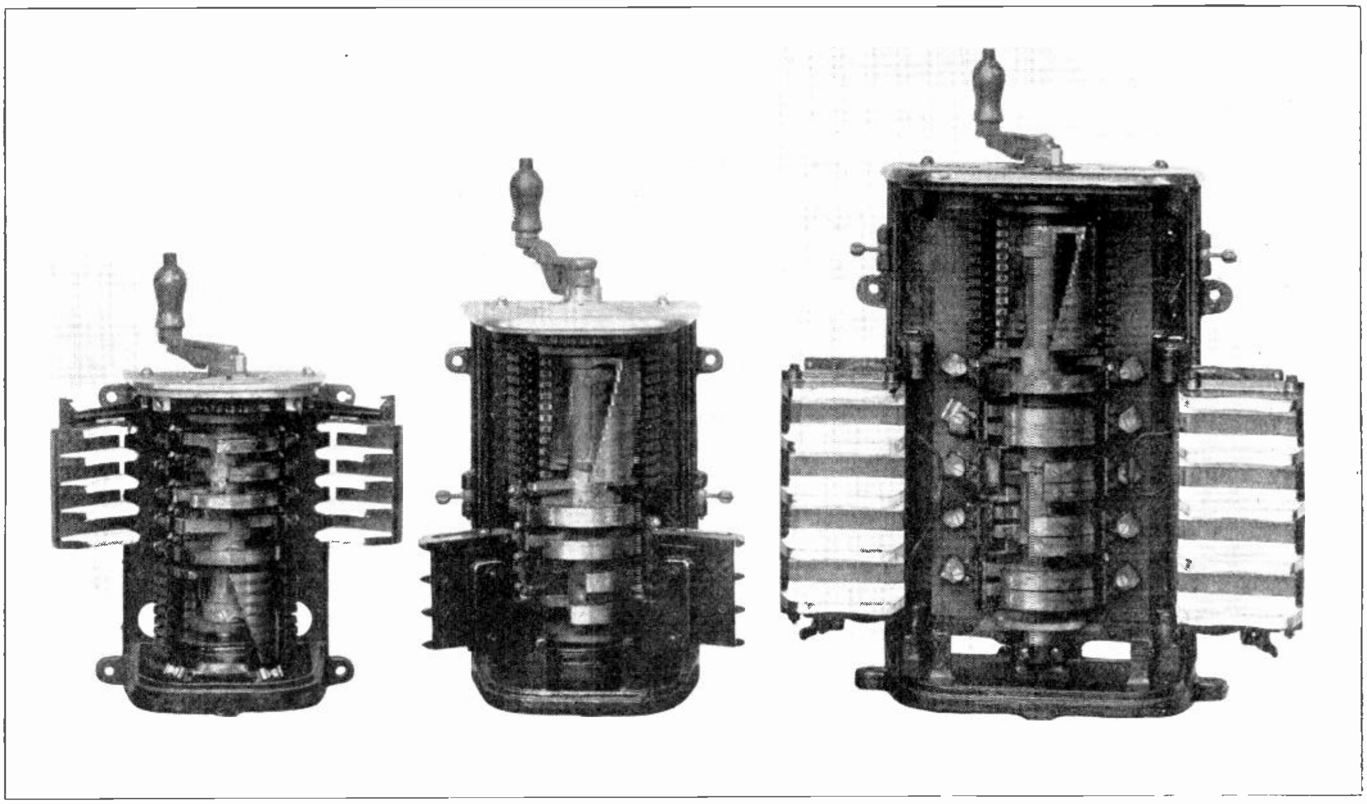

Fig 143. The above photo shows several types and sizes of modern drum controllers. Examine carefully the construction and arrangement of parts of each of these controls.

The field circuit is left complete when the controller is in the off position and as long as the line switch remains closed. This circuit can be traced from the positive line wire to contact "L-1", segment "1-A", segment "1-E", and the jumper at "X", segment "F D", contact 9 and through one-half of the shunt field resistance, then through the shunt field back to the negative line wire.

This half of the shunt field rheostat is left in series with the field for dynamic braking so that the motor armature will not generate too high a counter-voltage.

Another way of illustrating the effect of dynamic braking is as follows: You have learned that the counter-voltage is in the opposite direction to the applied line voltage which rotates the motor. Then, when we disconnect the armature from the line and connect it across the dynamic brake resistance, the armature continues to rotate in the same direction and will produce counter-voltage in the same direction; which will force current through the armature and braking resistance in the opposite direction to what the line current formerly flowed.

As this current resulting from counter-voltage is in the opposite direction to the normal armature current, it will tend to reverse the direction of the armature rotation. This is illustrated by the two diagrams in Fig. 141.

In the view at "A", the symbols marked within the conductors show the direction of the applied voltage and current during motor operation. The symbols marked at the side of the conductors illustrate the direction of the counter-voltage induced in them, which is opposite to the applied voltage and current. With the direction of the motor field as shown, the machine will normally rotate counter-clockwise.

In the view at "B", the line current has been shut off from the motor winding and the direction of current set up by counter-voltage through the armature winding and dynamic braking resistance is shown by the symbols within the conductors.

The polarity and direction of the motor field remain the same, but the direction of flux around the armature conductors is now reversed, and thus it tends to produce rotation in the opposite direction.

The effect of dynamic braking and the period of time in which the motor armature can be stopped by this method will depend upon the strength of field excitation which is left on the motor when the controller is placed in the off position, and upon the amount of resistance used for dynamic braking.

Fig. 142 shows a simplified connection diagram for a shunt motor equipped with dynamic braking. This diagram shows only the controlling contacts which would be used for dynamic braking alone. The solid arrows show the normal direction of current flow through the armature when it is operating from the line voltage, and with contacts "L-1" and "L-2" closed. During this time the contacts "D-1" and "D-2" are, of course, open.

When this motor is stopped, line contacts "L-1" and "L-2" are opened and contacts "D-1" and "D-2" are closed. The counter-voltage in the armature then sends current through it in the reverse direction, as shown by the dotted arrows.

The shunt field is connected across the line in series with its resistance and, as long as it remains excited, the current in the reverse direction will reverse the rotation of the armature. As the motor armature slows down, the counter-voltage generated becomes less and less, and the effect of dynamic braking is reduced.

When the motor armature reaches a complete stop, the voltage in its conductors, of course, ceases to be generated. This results in a sort of cushioning effect and provides one of the smoothest forms of braking which can be used on D. C. motors.

184. REGENERATIVE BRAKING

In some cases, for example with railway motors, the principle of dynamic braking is used in what is known as **regenerative braking**, to actually feed current back to the line.

In order to accomplish this, it is necessary to leave the armature connected to the line and over-excite the field. Then, when an electric car or train, for example, starts down a grade and attempts to rotate its armature rapidly, the motor armature will generate a higher counter-voltage than the applied line voltage.

This will actually force current back into the line, as though this machine were operating in parallel with the power-plant generators.

Dynamic braking effects great savings in this manner and in some cases may supply from 10 to 35 per cent of the energy required by all trains on the system.

Dynamic braking on electric railway applications also saves an enormous amount of wear on brake shoes and air-brake equipment, and a great amount of wear and tear in cases where it is used for cranes, hoists, etc.

Neither dynamic braking nor regenerative braking is effective when the machine is at a stop or practically stopped. Therefore, it is necessary to have either mechanical or magnetic brakes to hold the motor armature stationary if there is some load which tends to revolve it, such as the load on a crane or elevator motor, or the tendency of a train to run down a grade.

Fig. 143 shows three drum controllers of different sizes and types. Note the various arrangements of contacts which can be provided to obtain different control features on the motors.

CARBON BRUSHES

The brushes play a very important part in the operation of any D. C. motor or generator, and are well worth a little special attention and study in this section.

The purpose of the brushes, as we already know, is to provide a sliding contact with the commutator and to convey the current from a generator armature to the line, or from the line to a motor armature, as the case may be. We should also keep in mind that the type of brush used can have a great effect on the wear on commutators and in producing good or bad commutation.

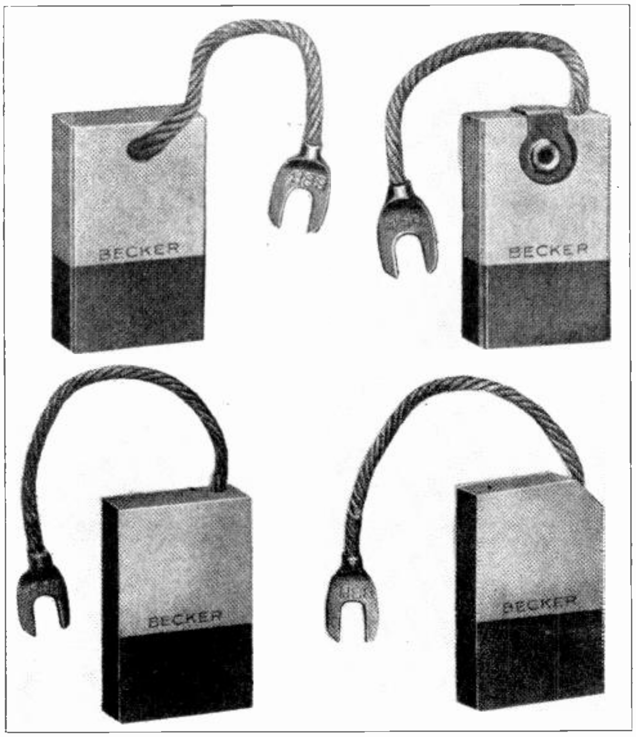

Fig. 144. Above are shown several carbon brushes of common types, such as used on D. C. motors and generators.

It should not be assumed, just because any brush will carry current, that any piece of carbon or any type of brush will do for the replacement of worn brushes on a D. C. generator or motor. This is too often done by untrained maintenance men, and it frequently results in poor commutation and sometimes serious damage to commutators and machines.

Many different grades of brushes are made for use on machines of various voltages and commutator speeds and with different current loads.

In order to avoid sparking, heating, and possible damage to commutators, it is very important when replacing worn brushes to select the same type of brushes or brush materials as those which are removed.

In special cases it is necessary to use only the brushes made by the manufacturers of certain motors or generators for those particular types of machines. Or, in difficult cases of brush or commutator trouble, it may be necessary to have a specialist from a brush manufacturing company determine exactly the type of brush needed. But in the great majority of cases you can replace brushes very satisfactorily by applying the principles and instructions given in the following paragraphs.

185. BRUSH REQUIREMENTS

A good brush should be of low enough resistance lengthwise and of great enough cross-sectional area to carry the load current of the machine without excessive heating. The brush should also be of high enough resistance at the face or contact with the commutator to keep down excessive currents due to shorting the armature coils during commutation. In addition, the brush should have just enough abrasive property to keep the surface of the commutator bright and the mica worn down, but not enough to cut or wear the commutator surface unnecessarily fast.

Figs. 144 and 145 show several carbon brushes of different shapes, with the "pigtail" connections used for carrying the current to the brush-holder studs.

186. BRUSH MATERIALS

The most commonly used brushes are made of powdered carbon and graphite, mixed with tarry pitch for a binder, and molded under high pressure into the shapes desired. This material can be molded into brushes of a certain size, or into blocks of a standard size from which the brushes can be cut.

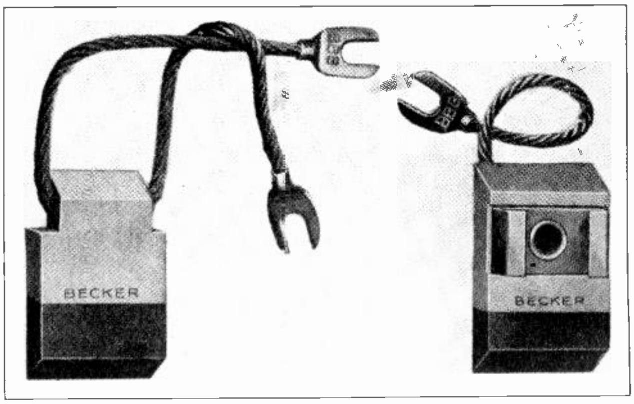

Fig. 145. Two carbon brushes of slightly different shapes, such as used with reaction type brush holders.

The molded material is then baked at high temperatures to give it the proper strength and hardness and to bake out the pitch and volatile matter.

Carbon is a very good brush material because it is of low enough resistance to carry the load currents without too great losses, and yet its resistance is high enough to limit the short circuit currents between commutator bars to a fairly low value. Carbon also possesses sufficient abrasiveness to keep commutator mica cut down as the commutator wears.

Graphite mixed with carbon in the brushes provides a sort of lubricant to reduce friction with the commutator surface. It also provides a brush of lower contact resistance and lower general resistance, and one with greater current capacity.

Powdered copper is added or mixed with graphite to produce brushes of very high current capacity and very low resistance. These brushes are used on low-voltage machines such as automobile starting motors, electro-plating generators, etc. They often contain from 30 to 80 per cent. of copper, and such brushes will carry from 75 to 200 amperes per sq. in.

Lamp-black is added to some brushes to increase their resistance for special brushes on high-voltage machines.

187. COMMON BRUSH MATERIAL. BRUSH RESISTANCE

A very common grade of carbon-graphite brush is made of 60% coke carbon and 40% graphite, and is known as the "utility grade". Brush material of this grade can be purchased in standard blocks 4" wide and 9" long, and in various thicknesses.

Brushes for repairs and replacement can then be cut from these blocks. They should always be cut so that the thickness of the block forms the thickness of the brush, as the resistance per inch through these blocks is higher from side to side than it is from end to end or edge to edge. This is due to the manner in which the brush material is molded and the way the molding pressure is applied, so that it forms a sort of layer effect or "grain" in the carbon particles.

This higher "cross resistance" or lateral resistance is a decided advantage if the brushes are properly cut to utilize it, as it helps to reduce short-circuit currents between commutator bars when they are shorted by the end of the brush.

Fig. 146 shows how brush measurements should be taken and illustrates why it is an advantage to have the highest resistance through the thickness of the brush and in the circuit between the shorted commutator bars.

The resistance of ordinary carbon-graphite brushes usually ranges .001 to .002 ohms per cubic inch, and these brushes can be allowed to carry from 30 to 50 amperes per sq. in. of brush contact area.

These brushes can be used on ordinary 110, 220, and 440-volt D.C. motors; and on small, medium, and large sized generators which have either flush or undercut mica, and commutator surface speeds of not over 4000 feet per min.

188. HARDER BRUSHES FOR SEVERE SERVICE

These utility grade carbon-graphite brushes can be obtained in a harder grade, produced by special processing, and suitable for use on machines which get more severe service and require slightly more abrasiveness. These harder brushes are used for steel mill motors, crane motors, elevator motors, mine and mine locomotive motors, etc.

Brushes with a higher percentage of carbon can be used where necessary to cut down high mica, and on machines up to 500 volts and with commutator speeds not over 2500 feet per minute. This type of brush is usually not allowed to carry over 35 amperes per square inch, and is generally used on machines under 10 h. p. in size.

189. GRAPHITE USED TO INCREASE CURRENT CAPACITY

Brushes of higher graphite content are used where high mica is not encountered, and for heavier current capacity. Such brushes are generally used only on machines which have the mica undercut; and are particularly adapted for use on older types of generators and motors, exhaust fans, vacuum cleaners, washing machines, and drill motors.

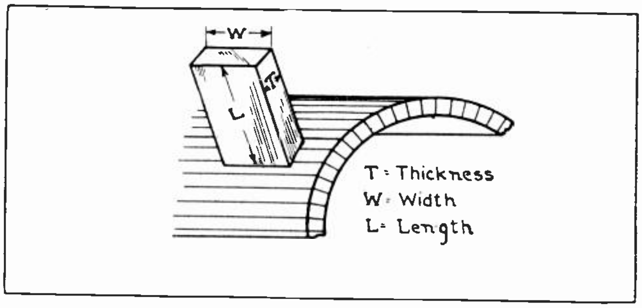

Fig. 146. This sketch illustrates the method of taking measurement for the length, width, and thickness of carbon brushes.

Brushes with the higher percentage of graphite do not wear or cut the commutators much, but they usually provide a highly-polished surface on both the commutator and brush face. After a period of operation with these brushes the surface of the commutator will usually take on a sort of brown or chocolate-colored glaze which is very desirable for long wear and good commutation.

190. SPECIAL BRUSHES

Some brushes are made of practically pure graphite and have very low contact resistance and high current-carrying capacity. Brushes of this nature will carry from 60 to 75 amperes per square inch and they can be used very satisfactorily on machines of 110 and 220 volts, or on high-speed slip rings with speeds even as high as 10,000 feet per minute.

The greater amount of graphite offers the necessary lubrication properties to keep down friction at this high speed.

Another type of brush consisting of graphite and lamp-black, and known as the electro-graphitic brush, is made for use with high-voltage machines which have very high commutator speeds. These brushes have very high contact resistance, which promotes good commutation. They can be used to carry up to 35 amperes per square inch and on commutators with surface speeds of 3000 to 5000 feet per minute.

These brushes are made in several grades, according to their hardness; the harder ones are well adapted for use on high-speed fan motors, vacuum cleaners, drill motors with soft mica, D. C. generators, industrial motors, and the D. C. side of rotary convertors. They are also used for street railway motors and automobile generators, and those of a special grade are used for high-speed turbine-driven generators and high-speed convertors.

191. BRUSH PRESSURE OR TENSION

It is very important to keep the springs of brush holders or brush hammers properly adjusted so they will apply an even amount of pressure on all brushes. If the pressure is higher on one brush than on another, the brush with the higher pressure makes the best contact to the commutator surface and will carry more than its share of the current. This will probably cause that brush to become overheated.

To remedy this, the spring tension should be increased on the brushes which are operating cool, until they carry their share of the load.

Brush pressure should usually be from 1¼ to 3 lbs. per square inch of brush contact surface. This brush tension can be tested and adjusted by the use of a small spring scale attached to the end of the brush spring or hammer, directly over the top of the brush. Then adjust the brush holder spring until it requires the right amount of pull on the scale to lift the spring or hammer from the head of the brush. One can usually tell merely by lifting the brushes by hand, whether or not there are some brushes with very light tension and others with too heavy tension or pressure.

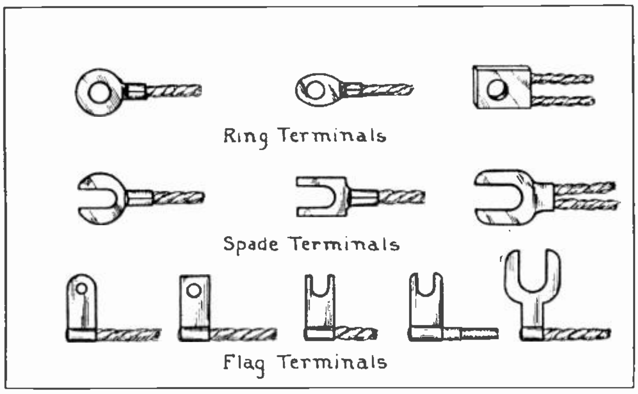

Fig. 147. Above are shown several types of terminals for brush shunts or leads.

Motors used on street cars, trucks, and moving vehicles, or in places where they are subject to severe vibration, will usually require a higher brush-pressure to keep the brushes well seated. On such motors the pressure required may even range as high as 4 lbs. per square inch.

192. BRUSH LEADS OR SHUNTS

All brushes should be provided with flexible copper leads, which are often called "pigtails" or brush shunts. These leads should be securely connected to the brushes and also to the terminal screws or bolts on the brush holders, and their purpose is to provide a low-resistance path to carry the current from the brush to the holder studs.

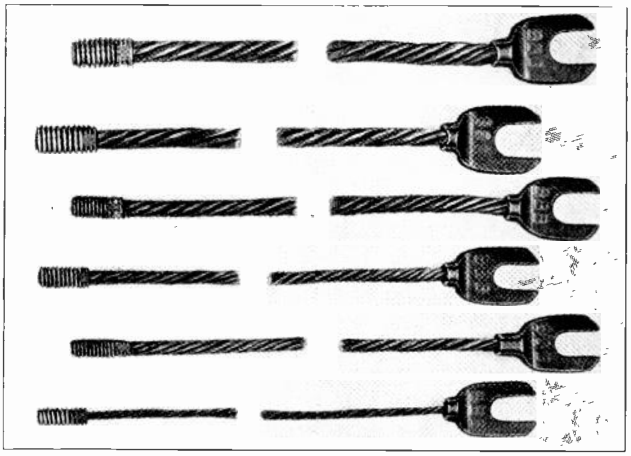

Fig. 148. Brush shunts can be obtained with threaded plugs on their ends for securely attaching them to the brushes.

If these brush shunts or leads become loose or broken, the current will then have to flow from the brush through the holder or brush hammers and springs. This will often cause arcing that will damage the brush and holder and, in many cases, will overheat the springs so that they become softened and weakened and don't apply the proper tension on the brushes.

The brushes shown in Figs. 144 and 145 are equipped with leads or brush shunts of this type and Fig. 147 shows a number of the types of copper terminals or clips that are used to attach these leads to the brush holders by means of terminal screws or bolts.

When new brushes are cut from standard blocks of brush material, the pigtails can be attached by drilling a hole in the brush and either screwing the end of the pigtail into threads in this hole or packing the strands of wire in the hole with a special contact cement.

Fig. 148 shows a number of brush shunts or leads with threaded plugs attached to them. These leads can be purchased in different sizes already equipped with threaded end plugs.

Fig. 148 illustrates the method of preparing a brush and inserting the threaded ends of the brush shunts. The top view shows a bar of brush stock from which the brushes may be cut, and in the center is shown the manner of drilling a hole in the corner of the brush.

Carbon graphite brushes are soft enough to be drilled easily with an ordinary metal drill, and they are then tapped with a hand tap, as shown in the left view in Fig. 148. The threaded plug on the end of the copper lead can then be screwed into this hole in the brush by means of pliers, as shown in the lower right-hand view of the same figure.

Brush leads of this type save considerable time in preparing new brushes, and insure a good low resistance connection to the brush. These leads can be unscrewed and removed from worn brushes, and used over a number of times.

193. CEMENT FOR ATTACHING LEADS TO BRUSHES

When brush leads with threaded tips are not available, a special compound or cement can be made by mixing powdered bronze and mercury. The bronze powder should first be soaked in muriatic or hydrochloric acid, to thoroughly clean it.

The acid should then be washed from the powder with lukewarm water. The bronze powder can then be mixed with mercury to form a thick paste. This paste is tamped solidly around the copper strands of the brush lead in the hole in the carbon brush, and will very soon harden and make a secure connection of low resistance.

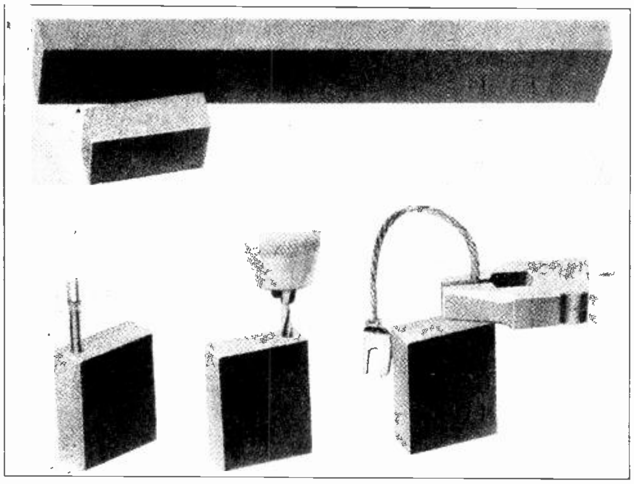

Fig. 148-A. These views illustrate the method of preparing a carbon brush to attach the threaded end of the brush lead or pigtail.

Care must be used not to make this cement too thick or it may harden before it can be tamped in place. It is usually advisable to mix only a very small quantity of the paste at one time, because it may require a little experimenting to get it just the right consistency.

194. DUPLICATING AND ORDERING BRUSHES

Worn or broken brushes should always be promptly replaced, before they cause severe sparking and damage to the commutator. Always replace brushes with others of the same grade of material if possible. The new brushes should also be carefully cut to the same size, so they will span just the same width on the commutator bar and will not fit too tight or too loose in the holders.

If it is necessary in emergencies to replace one or more brushes with others of a slightly different grade, place all those of one grade in the positive brush holders, and those of the other grade in the negative holders. If brushes of different grades are placed in the same set of holders, the current will divide unequally through them and cause heating of certain ones, and it may also cause unequal wear on the commutator.

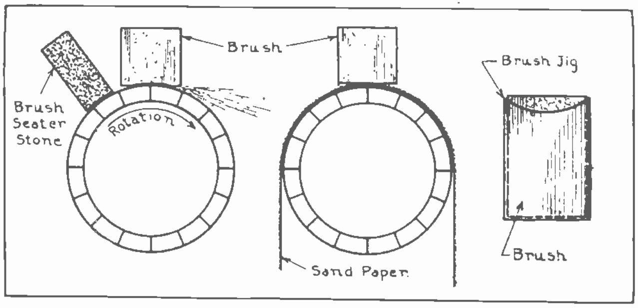

Fig. 149. The above sketches show several methods of cutting brush faces to fit the commutator surface. Each is explained in the accompanying paragraphs.

When ordering new brushes for any certain machine, careful measurements should be taken of the brush width, thickness, and length. The brush thickness is measured in the direction of travel of the commutator or slip rings; the width is measured parallel to the armature shaft or commutator bars; and the length is measured perpendicularly to the commutator or slip ring surface. These measurements are shown in Fig. 146. Any other special measurements should also be given, and in some cases it is well to send the old brush as a sample.

The length of brush leads or shunts should also be specified when ordering new brushes. They are usually provided in standard lengths of five inches, but can be furnished shorter or longer where required.

The style of terminal or end-clip should also be given, along with the diameter of the slot or hole by which they are attached to the bolts on the brush-holder studs.

It is generally advisable to have on hand a few of the brushes most commonly required for re-

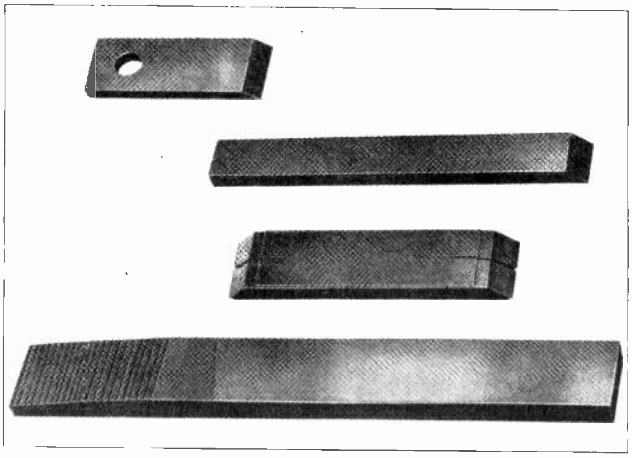

Fig. 150. Brushes made of copper strips or copper "leaf" construction are often used for low voltage machines which handle very heavy currents.

placement on any machines you may be maintaining. It is also well to have a catalogue of some reliable brush manufacturer, to simplify ordering by giving the number and exact specifications of the brushes required.

195. FITTING NEW BRUSHES TO THE COMMUTATOR

New brushes should always be carefully fitted to the surface or curvature of the commutator. This can be done by setting the brush in the holder with the spring tension applied, and then drawing a piece of sandpaper under the contact surface or face of the brush, as shown in the center view in Fig. 149.

The sandpaper should be laid on the commutator with the smooth side next to the bars and the rough or sanded side against the face of the brush. Then, with the brush held against the paper by the brush spring, draw the paper back and forth until the face of the brush is cut to the same shape as the commutator surface.

Be sure to hold the ends of the sandpaper down along the commutator surface so these ends will not cut the edges of the brush up away from the commutator bars.

On small machines where it is difficult to use sandpaper in the manner just described, a **brush-seater stone** can be used. These stones consist of fine sand pressed in block or stick form with a cement binder.

The brush seater is held against the surface of the commutator in front of the brush, as shown on the left in Fig. 149, and as the commutator revolves it wears off sharp particles of sand and carries them under the brush, thus cutting out the end of the brush until it fits the commutator.

When fitting a number of brushes, a brush jig such as shown on the right in Fig. 149 can be used to save considerable time. This jig can be made of either metal or wood, and in the form of a box into which the brush will fit. The open end of the box or jig has its sides cut to the same curve as the commutator surface.

A new brush can then be dropped in this box and its face cut out to the curve or edge of the box by means of a file. The bulk of the carbon can be cut out very quickly in this manner, and the brush can then be set in the holder and given a little final shaping with sandpaper as previously explained.

Graphite brushes should generally be used on iron slip rings on three-wire generators, and metal-graphite brushes on copper rings.

On certain very low voltage machines where heavy currents are handled, "copper leaf" brushes are used. These are made of a number of thin flat strips of hard drawn copper, with the end of the group beveled as shown in Fig. 150.

When brushes of too low resistance are used, they will generally cause long, yellow, trailing sparks at the commutator surface behind the brushes.

Brushes of too high resistance will cause blue sparks and will also cause the brushes to overheat.

If the commutator mica is not being cut down by the brushes and becomes too high, it will cause sparking and burned spaces to the rear of the mica segments, on the leading edges of the commutator bars.

The proper type of brushes and their proper fitting, well deserve thorough attention on the part of any electrical maintenance man or power plant operator; as a great many troubles in motors and generators can be prevented or cured by intelligent selection and care of brushes.

MAINTENANCE OF D. C. MACHINES

Direct current motors and generators are so similar to each other in mechanical construction and electric operation that many of the same rules for care and maintenance apply to both.

With the many thousands of these machines in use in factories, power plants, steel mills, stores, and office buildings, and on railways, the electrician who can intelligently and efficiently operate and maintain them is in great demand.

Most of the repairs and adjustments which have to be made on D. C. machines are usually on parts that are easily accessible and which can be easily handled with simple tools.

In the majority of cases, the brushes, commutator, and bearings require closer attention and more frequent repair than other parts of the machines. These should not, however, require an excessive amount of attention if the motors or generators are operating under favorable conditions and are given the proper care.

The windings of motors and generators very seldom give any trouble, unless the machines are frequently overloaded or if the windings are very old or are subjected to oil and dirt.

196. IMPORTANCE OF CLEANING

One of the most important rules for the maintenance of all electric machines is **to keep them clean and well lubricated.** If this simple rule is followed it will prevent a great many of the common troubles and interruptions to the operation of the equipment.

If dust and dirt are allowed to accumulate in the windings of motors or generators, they clog the ventilation spaces and shut off the air which is necessary for proper cooling of the machine. A layer of dust is also an excellent insulator of heat, and tends to confine the heat to the windings and prevent its escape to the surrounding air. Dust and dirt also absorb and accumulate oil and moisture.

For these reasons, the windings of all electric machines should be kept well cleaned by brushing them with a duster or cloth and occasionally blowing out the dust from the small crevices by means of a hand-bellows or low pressure compressed air. Never use compressed air of over 40 lbs. pressure per square inch, or air that contains particles of grit or metal or any moisture.

Sometimes it is necessary to wash off an accumulation of oily or greasy dirt from the windings of machines. This can be done with a cloth and gasoline. If the windings are well impregnated with insulating compound, the gasoline will not penetrate deeply into them, but if it is allowed to soak into the windings to any extent they should be thoroughly dried before the machine is again connected to a line or operated.

Mixing from ¼ to ½ of carbon-tetra-chloride with gasoline reduces the danger of fire or explosion when using it as a cleaning solution.

197. EXCESSIVE OIL VERY DETRIMENTAL TO ELECTRIC MACHINES

Oil is very detrimental and damaging to the insulation of machine windings and should never be allowed to get on them. Once a winding becomes thoroughly oil-soaked, it will probably have to be rewound.

In some cases, if the oil has not penetrated too deeply, it may be possible to wash it out with gasoline and then thoroughly dry out the gasoline before the winding is put back in service.

When oiling the bearings of a motor or generator, extreme care should be used not to fill the oil-cups or wells too full and cause oil to run over on to the commutator or windings of the machine.

It is practically impossible to secure good commutation if the commutator of a motor or generator is covered with dirt and oil. This will cause the faces of the brushes to become glazed and packed with dirt and will in many cases cause considerable sparking.

Dirt and oil will form a high-resistance film on the surface of the commutator, which will tend to insulate the brushes and prevent them from making good contact.

Oil is also very damaging to the cement used in the mica segments of commutators.

If any oil accidentally gets on the surface of a commutator, it should be wiped off immediately with a cloth and a small amount of kerosene or gasoline and carbon-tetra-chloride. Gasoline should not be used around a running machine because of the danger of igniting it by a spark from the brushes.

198. KEEP BEARINGS WELL LUBRICATED

The bearings of all motors and generators should be kept well oiled but not flooded with oil. The oil in the bearings should be examined frequently to make sure that it is clean and free from dirt and grit, and should be changed whenever necessary.

If the oil in a bearing has become exceptionally dirty or mixed with any abrasive dirt, the oil should be drained and the bearing and oil-cup washed out with kerosene or gasoline. The bearing and cup should then be refilled with clean fresh oil and when the machine is started it should be revolved slowly at first, to be sure that all the kerosene or gasoline on the bearing surfaces has been replaced by oil before the machine is running at full speed.

Bearings should not be filled from the top when regular oil openings or vents are provided on the side.

Bearings which are equipped with oil rings should be inspected frequently to make sure that the rings are turning and supplying oil to the shaft. Check the temperature of bearings frequently either by means of a thermometer, or by feeling of them with the hand to make sure that they are not operating much above normal temperature.

A great amount of work and trouble and costly shut-downs of electrical machinery can be prevented by proper attention to lubrication of bearings.

199. WINDING TEMPERATURES

The temperature of machine windings should be frequently checked to see that they are not operating too hot, that is at temperatures higher than 40° C. above that of the surrounding air.

Convenient thermometers can be obtained for this use and placed in crevices in the winding or against the side of the winding with a small wad of putty pressed around the thermometer bulb and against the winding.

All terminals and connections on electric machines should be frequently inspected and kept

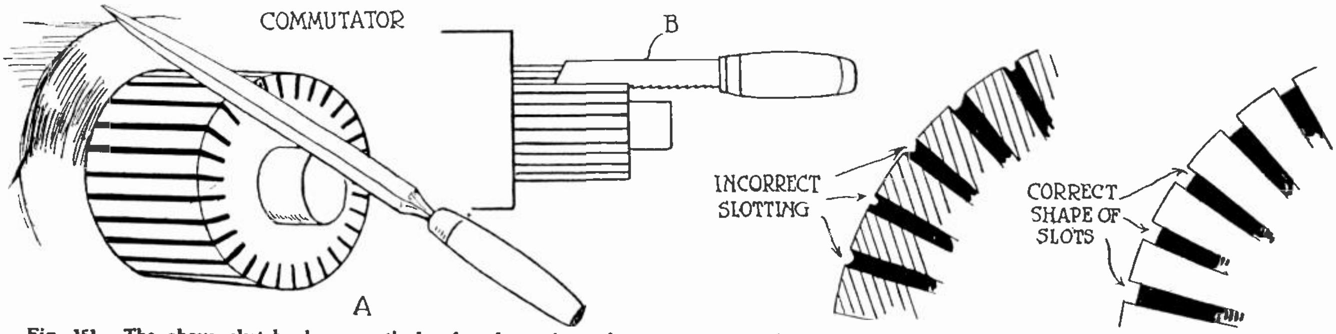

Fig. 151. The above sketch shows methods of undercutting mica segments on the commutator. Mica must be kept down even with, or below the surface of the commutator bars, or it will cause the brushes to make poor contact and will cause severe sparking.

securely tightened. This includes those at the line, at the controller or starting switches, and at the brushes and field coils.

200. PROTECT MACHINES FROM WATER

Moisture or water is always a menace to the insulation and operation of electrical machinery, and machines should be thoroughly protected to keep all water away from their windings and commutators. If a motor or generator is located where water from above may drip upon the commutator, it is very likely to cause flash-overs and damage to the brushes and commutator.

If the windings of a machine become water-soaked or damp, they must be thoroughly dried, either by baking in an oven or by passing low-voltage direct current through the machine to dry them out.

Where a machine is too large to put in an oven or where no oven is available, the armature can be locked to prevent its rotation and then, by the use of a rheostat, low-voltage direct current can be applied in just the right amount to dry out the winding.

Water should be carefully excluded from oil wells and bearings, as it is not a good lubricant and it may cause serious damage if it mixes with the oil.

Motors that operate pumps may often have to be enclosed in a special box or shielding to prevent any drip or spray from coming in contact with them.

201. BRUSH ADJUSTMENT AND MICA UNDERCUTTING

Brushes should be frequently inspected to see that they are seated properly on the commutator and have the proper spring tension. If the commutator mica becomes high it should be corrected, either by using brushes of a type that will keep the mica cut down, or by undercutting the mica with a tool for this purpose.

Commutator mica on small machines can be undercut by hand with a piece of hack-saw blade equipped with a handle, as shown in Fig. 151. The views on the right in this figure show the correct and incorrect methods of undercutting mica.

Mica should be cut squarely with smooth, easy strokes of the hack-saw blade held in a vertical position. The mica should not be cut away too deeply, or the grooves will tend to accumulate dust and dirt, and cause short circuits between the commutator bars.

On small and medium-sized machines, the undercutting need not to be deeper than from 1/64 to 1/32 of an inch. Care should be taken not to scratch or scar the commutator bars while undercutting mica, and one should also be careful not to leave on the edges or corners of the bars any burrs which might cause a short circuit between them.

A small, three-cornered file can be used for cleaning the ends or corners of the mica segments, as shown in the left view in Fig. 151, but a file or three-cornered object should not be used for undercutting mica, as the top of the mica segments must be cut squarely, as shown in the right-hand view in the figure.

For undercutting the mica on large machines, a regular motor-driven mica cutter can be used. These machines consist of a small rotary saw, driven by a motor with a flexible shaft and equipped with handles for guiding the saw blade in the mica slots.

202. RESURFACING AND TRUING OF COMMUTATORS

If the surface of the commutator becomes rough and pitted it can be cleaned with sandpaper. Small spots of dirt or very lightly burned spots may be removed by holding sandpaper against the commutator while the machine is running.

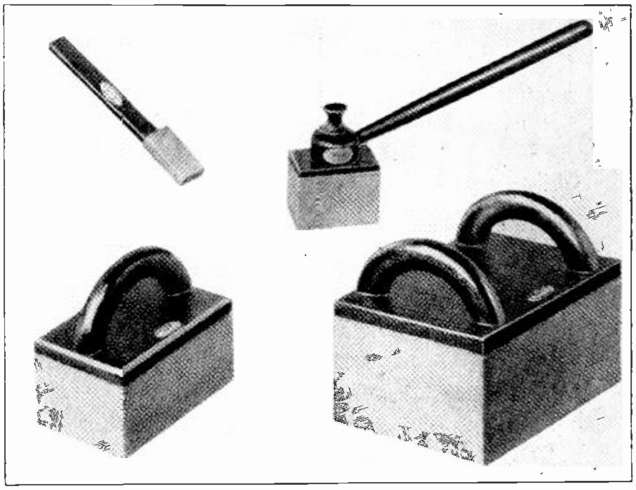

Fig. 152. Commutator stones of the above types are used for dressing or grinding down the burned and rough spots on commutator surfaces.

If the commutator requires much sand-papering it should be done with a block, with a curved surface to fit the commutator, to hold the sandpaper in a manner that will tend to smooth out hollow spots or high spots on the bars, and brings the commutator back to a true round shape.

Several strips of sandpaper can be folded over the curved end of a block of this type and fastened in place with clamps or tacks. As each strip becomes worn it can be removed, exposing the next strip, etc.

Special commutator stones can be obtained for dressing or re-surfacing commutators. These stones consist of a block of grinding or abrasive material equipped with handles for convenient application to the commutator surface. Several stones of this type are shown in Fig. 152. These can be obtained in different sizes and degrees of hardness for use with machines having commutators of different diameters and surface speeds.

If a commutator has become badly pitted or burned or out of round, it may be necessary to remove the armature from the machine and turn the commutator down in a lathe, as shown in Fig. 154. When truing a commutator in a lathe one should never remove any more copper than is absolutely necessary, because even a very light cut with a lathe

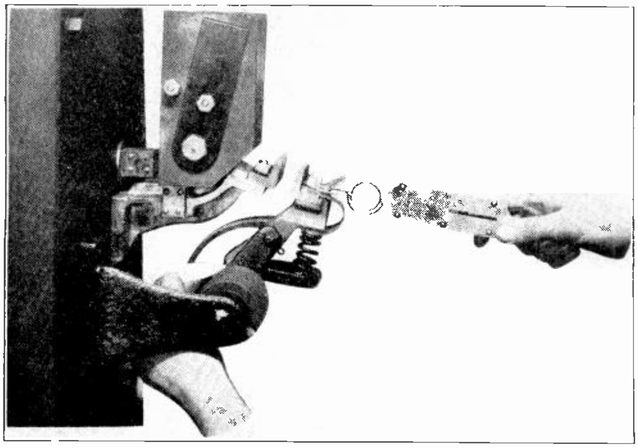

Fig. 153. The above photo illustrates the method of testing the contact pressure or tension of controller contacts. The scale can be used in the same manner for adjusting tension on brushes.

tool will remove more copper from the bars than several years of ordinary wear would destroy.

The armature should be carefully centered to run true in the lathe, and the tool set to remove only a very thin coating of copper, no thicker than a thin piece of paper. If this first cutting doesn't remove the flat spots, another cut can be made.

Commutators should never be turned down in a lathe except as a last resort or when they are badly out of round.

Motors and generators should always have secure and firm foundations and should be anchored so that they don't vibrate while running. If the machine is allowed to vibrate, it may cause serious damage to the bearings and possibly also damage the commutator, shaft, or windings.

203. CARE OF CONTROLLERS

All switches, circuit breakers, and controllers used in connection with motors and generators should be kept in good condition, because if they are allowed to become defective, they may cause damage to the machines by frequent interruptions in the current supply, or by causing voltage drop and lower voltage than the machine is supposed to operate on.

All contact shoes or fingers on starting and control equipment should be kept in good condition and securely tightened. Bolts, nuts, screws, and terminals should also be kept tight and clean.

Sliding contacts or make-and-break contacts of controllers should be kept properly lubricated to prevent excessive wear. A good grade of vaseline serves very well for this purpose, as it will remain where applied on the contacts and will not run or spread over the equipment.

Resistance elements of starting and control equipment should be kept in good condition. In case of open circuits in resistance units, it may be necessary to temporarily bridge this open section of the resistance with a shunt or jumper, in order to keep the machine in operation; but the defective resistance unit should be replaced with a new one as quickly as possible to prevent overloading the machine when starting, due to having insufficient resistance in the armature circuit.

Dash pots and time element devices should be kept properly adjusted to allow the proper time for starting of motors.

204. CARE OF OVERLOAD PROTECTIVE DEVICES

Fuses and overload devices on control equipment or anywhere in the circuit to electrical machines should be kept in good condition, and should be of the proper size and adjustment to protect the machines from current overloads. Fuses should never be replaced with others of larger current ratings than the machines are supposed to carry.

Overload trip coils on circuit breakers should be kept properly adjusted to trip at any current above the normal percentage of overload which the machine is allowed to carry.

If breakers or fuses open frequently in the circuit, it is an indication of some overload or fault on the machines, and the trouble should be located and remedied, instead of setting the circuit breakers for heavier currents or using larger fuses.

205. LIST OF COMMON TROUBLES

In the following lists are given a number of the more common troubles of D. C. machines and the symptoms which indicate these troubles:

MOTORS

MOTOR FAILS TO START

1. Fuse out, causing an open circuit
2. Brushes not making proper contact
3. Line switch open
4. Bearings "seized" due to lack of oil
5. Motor overloaded. This will usually blow the fuse
6. Open field circuit at the terminal block or in the starting box
   "No voltage" release magnet burned out
7. Open armature or line connections, either at the motor or controller
8. Grounded winding, frequently blows the fuse
9. Brushes not set on neutral point
10. Armature wedged. Remove the wooden wedges from air gap of new machines
11. Dirty commutator or brush faces
12. High mica insulation on commutator preventing brush contact
13. Field coils short-circuited or grounded. Will usually cause excessive armature currents and blow the fuses
14. Reversed field connections. Test for polarity with a pocket compass
15. Low voltage
16. Pulley, gear, or coupling, may be tight against the bearing
17. Bent shaft, causing armature to stick on pole faces
18. Burned out armature.

206. MOTOR STARTS TOO QUICKLY

1. Starting box resistance too low for the motor
2. Starting box resistance short-circuited
3. Insufficient time allowed for starting
4. Line voltage too high
5. Series motor without enough load for the starting resistance used with it
6. Too much resistance in field circuit.

207. MOTOR ROTATION REVERSED

1. Reversed field connections
2. Brush connections reversed or brushes in wrong position
3. Compound motor connected differential and starts in reverse direction from the series field. Speed will be high and torque very low
4. No field. Residual magnetism may start the motor in reverse direction on very light loads only. Motor will not start under heavy load
5. Wrong field connection in starting box. Armature resistance may be in series with the field.

208. SLOW STARTING OF MOTORS AND WEAK POWER

1. Low voltage
2. Resistance of starting box too high
3. Brushes off neutral, and will cause bad sparking
4. Motor overloaded
5. Heavy flywheel on driven machines
6. Weak field due to resistance in its circuit
7. Dirty or loose connections
8. Dirty or loose brushes
9. Brushes improperly spaced on commutator
10. Armature defects, shorts, grounds or opens
11. Wet armature or commutator.

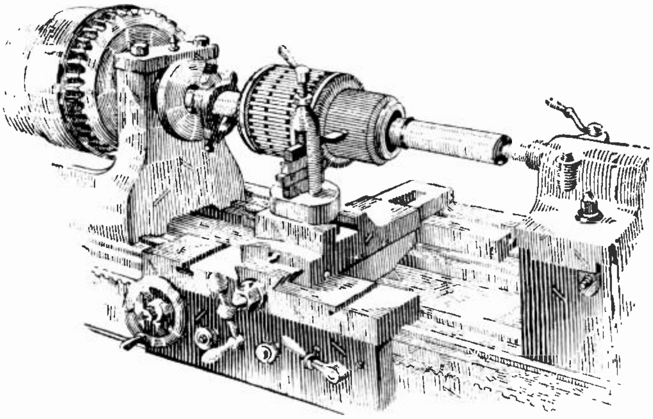

Fig. 154. Commutators that are badly burned or out of round can be resurfaced and trued up in a lathe as shown above.

209. MOTOR BUCKING OR JERKING

1. Overloaded motor
2. Reversed interpole polarity
3. Loose field connections which alternately open and close the field circuit and cause the motor to run jerkily
4. Wet or shorted field coils
5. Defects or loose connections in starting box.

210. MOTOR OVERSPEEDS

1. Open field circuit, may cause dangerously high speed
2. Shorted or grounded field coils
3. Load suddenly reduced on compound motor using field control
4. Brushes off neutral
5. Shorted or grounded armature conductors
6. Line voltage too high
7. Series motor overspeeds on light loads or no load.

211. SPARKING AT BRUSHES

1. Brushes or commutator dirty
2. Rough or burned commutator
3. High or low bars in commutator
4. Commutator out of round
5. Commutator segments shorted by carbon or copper dust in the mica slots, or by solder bridged across the bars
6. High mica
7. Brushes off neutral
8. Wrong type of brushes
9. Brushes poorly fitted
10. Brushes stuck in holders
11. Poor or unequal brush tension
12. Weak field, due to short circuits or ground in the coils
13. Reversed field coils
14. Opens or shorts in armature winding. Opens usually cause long blue sparks and shorts are generally indicated by yellow or reddish sparks. The location of the defective coils will usually be indicated by burned bars to which they are connected
15. Oil grease or water on the commutator
16. Unequal air gaps due to worn bearings
17. Unbalanced armature winding
18. Bent shaft which causes brushes to chatter
19. Poor foundation, permitting vibration of the machine.

212. OVERHEATING OF MACHINES

1. Overloading will cause heat on both motors and generators due to excessive current passing through their windings and brushes
2. Excessive brush friction and brush tension too great
3. Armature out of center due to worn bearings
4. Brushes off neutral
5. Damp windings
6. Excessive sparking at commutator, which may cause enough heat to melt the solder and loosen the armature connections
7. Opens or shorts in armature winding
8. Hot field coils caused by high voltage or short circuits in the coils
9. Field shunts loose or disconnected
10. Windings shorted by oil-soaked insulation

11. Hot field poles may be due to poor design causing eddy currents in the pole shoes. Unequal air gaps may cause field poles closest to the armature to heat
12. Hot bearings due to poor lubrication. May be caused by poor oil, stuck oil rings, or clogged oil wicks. Also caused by poor shaft alignment or excessive belt tension
13. Armature out of center with field poles, due to worn bearings. Causes excessive currents in parts of the armature winding and eddy currents in the field poles. Bearings should be repaired immediately
14. Clogged ventilating ducts
15. Loose connections between armature coils and commutator bars
16. Weak field, not allowing sufficient counter-E.M.F. to be generated to keep the armature current normal
17. Heat transfer through direct shaft connections from air compressors, steam engines or other machinery.

Normal operating temperatures of D. C. motors should not exceed 40° C. above the surrounding room temperature when operated at full load, or 55° C. at 25% overload for two-hour periods. If the machines are operated at temperatures above these values for any length of time, the insulation of the windings will become damaged and eventually destroyed.

213. UNUSUAL NOISES

1. Belt slapping due to a loose, waving belt
2. Belt squealing due to belt slipping on the pulley, caused by loose belt or overloads
3. Brush squealing due to excessive spring tension, hard brushes, or dry commutator surface. Application of a good commutator compound will usually stop the squealing due to a dry unlubricated commutator
4. Knocking or clanking may be caused by a loose pulley, excessive end play in the shaft, a loose key on the armature spider, or a loose bearing cap
5. Chattering vibration, caused by poor brush adjustment and loose brushes, hard brushes, or commutator out of round
6. Heavy vibration due to unbalanced armatures, bent shaft, or loose foundations.

214. GENERATOR TROUBLES. FAILURE TO BUILD UP VOLTAGE

1. Residual field lost or neutralized
2. Reversed field
3. Poor brush contact or dirty commutator
4. Open field circuit due to loose connections or broken wires
5. Field rheostat open or of too high resistance
6. Series field reversed so it opposes the shunt field
7. Shunts disconnected or improperly connected
8. Wet or shorted field coils
9. Too heavy load on a shunt generator
10. Residual magnetism reversed by flux from nearby generators.

215. POOR VOLTAGE REGULATION

1. Loose field shunts or connections
2. Poor regulation of engine speed
3. Belt slipping
4. Brushes off neutral
5. Improper resistance of field rheostat, or loose connections at this rheostat
6. Series field shunts not properly adjusted
7. Overheated field coils
8. Loose or grounded field wires between generator and switchboard
9. Armature out of center
10. Brushes improperly spaced
11. Weak field caused by short circuits or grounds in the windings
12. Shorts, opens, or grounds in the armature coils
13. Excessive and frequent variations in load
14. Improper compounding

216. GENERATORS WILL NOT OPERATE IN PARALLEL

1. Poor speed regulation on prime mover, caused by improper governor adjustment
2. Open equalizer connections
3. Incorrect field shunts, open or loose field connections, or weak fields
4. Defective field rheostat
5. Wet field coils
6. Improper adjustment of series fields for compounding effects
7. Extreme difference in size, causing the smaller machine to be more responsive to load changes than the larger machine
8. Belt slipping, on belt-driven generators
9. Variations in steam pressure, on generators driven by steam engines
10. Defective voltmeter.

217. SYSTEMATIC TESTING

The preceding lists of common troubles and their symptoms are given to serve as a general guide or reminder of the possible causes of trouble in D. C. machines. They do not cover every possible trouble or defect, but intelligent application of the principles covered throughout these sections on D. C. equipment and careful systematic testing, should enable you to locate any of these troubles listed or any others.

Keep well in mind the advice previously given in this Reference Set, to the effect that even the troubles most difficult to locate can always be found by methodically and systematically testing circuits and devices.

Let us remind you once more that any defect or trouble in electrical equipment or circuits **can be found, and that someone is going to find it.** It will be to your credit to be able to locate any and all troubles, and the best way to gain experience and confidence is to undertake willingly every trouble-shooting problem you can find. Go about it coolly and intelligently, use your knowledge of the principles of electricity and electrical equipment and circuits, and in this manner you will save a great deal of time and many mistakes.

You will also be surprised to find out how very simple some of the apparently baffling electrical troubles are, to the trained man who knows how to test and locate them.

218. TEST EQUIPMENT FOR LOCATING FAULTS

Some of the more common devices used for trouble shooting and testing are as follows:

1. Test lamp and leads
2. Magneto tester
3. Battery and buzzer tester
4. Voltmeter (portable type)
5. Ammeter (portable type)
6. Thermometer
7. Speed indicator
8. Wheatstone bridge
9. Megger.

Every maintenance electrician's kit should include a test lamp and a battery and buzzer test-outfit. These are very inexpensive and can easily be made up in a few minutes' time. It is a good idea to use two sockets and bulbs in series, for a test lamp which can be used either on 220 or 110-volt circuits. The two lamps will burn at full brilliancy when connected at 220 volts, and at one-half brilliancy on 110-volt circuits.

219. USE OF TEST LAMPS, BUZZERS AND MAGNETS

Test lamps of this type can be used for locating open circuits, short circuits, and grounds on the machines themselves or the wires leading to them. They are also very convenient for testing to locate blown fuses and to determine whether or not there is any voltage or the proper voltage supplied to the terminals of the machines.

The battery and buzzer test-outfit can be made of one or two dry cells taped together, with the buzzer taped securely to them. This unit should then be supplied with flexible test leads several feet long. The dry cells and buzzer can be located in a portable box if desired.

A simple test outfit of this kind can be used for locating grounds, opens, and short circuits on machines or circuits that are not alive.

The magneto test-outfit is very effective for locating high-resistance short circuits or grounds. These hand-driven magnetos generate voltage sufficiently high to break down the resistance at the point of the fault or defect, while a battery test set or test lamp used with ordinary line voltage might not show the fault.

When installing any new circuits to generators, motors, or controllers, the wiring should be thoroughly tested for grounds, shorts, and opens before connecting the machines.

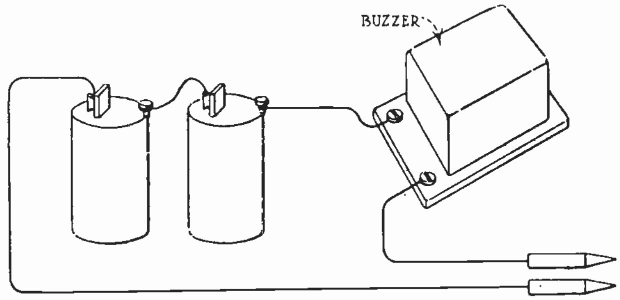

Fig. 155. A simple test set consisting of dry cells and buzzer is a very effective device for trouble shooting and locating of faults in electric circuits and machines.

An ordinary A.C. test magneto will ring through 20,000 to 40,000 ohms resistance. The use of magnetos above 50,000 ohms is not advised because they will ring through the insulation of conductors on long circuits.

In some cases an A. C. magneto will cause its bell to ring when the terminals are attached to the windings of very large machines, due to capacity or condenser effect between the windings and the frame of the machine. In such cases the ringing of the magneto doesn't necessarily indicate defective insulation.

220. USE OF PORTABLE VOLTMETERS AND AMMETERS

Voltmeters are very essential in plants having a great number of electrical machines and circuits. Voltmeters should be used for measuring line voltages or voltage drop on various circuits, to determine whether or not the proper voltage is supplied to the equipment.

It is very important that D. C. motors be operated at their proper rated voltage and not at voltages 10% or more below this, which sometimes results from overloaded line circuits and excessive voltage drop.

Low reading voltmeters are very satisfactory test devices for locating faults in armatures and field coils, as well as commutator defects. They can also be used for testing voltage drop in controller coils and resistors and to locate defective coils in this manner.

Ammeters can be used to measure the current through any circuit or machine and to determine whether wires or machine windings are properly loaded or overloaded.

One or more ammeters should always be available in plants where numerous electrical machines are to be operated and maintained.

221. THERMOMETERS

Thermometers should be used to determine the temperature at which various machines are operated, and especially if a machine is known to be operating somewhat overloaded. On machines that are not overloaded, if the temperatures rise above the rated temperature increase for a normal load, the cause should be determined and remedied at once.

By checking the temperatures at different points on a machine or its windings, the exact location of the fault or trouble can frequently be found by noting the points of higher temperature. Some thermometers for this use are marked with the centigrade scale, while others are marked with the Fahrenheit scale.

A convenient rule for converting the temperature in either scale to the other is as follows:

Temperature C. = 5/9 × Temperature F. — 32
Temperature F. = 9/5 × Temperature C. + 32

222. SPEED INDICATORS

Speed indicators or revolution counters are commonly used to determine the speed of various machines. If machines are overloaded or thought to be operating at low voltage, it is often necessary to test their speed.

In other cases, checking the speed of machines may assist in locating certain faults within the machine or its own windings. In many industrial plants and factories it is very important that the motors driving production machines be kept operating at their proper rated speed, in order not to delay the production of the article being manufactured.

With the ordinary low-priced revolution counters or speed indicators, a watch with a second-hand can be used to check the time during which the revolutions are counted, and to get the speed in R.P.M.

Where a large number of machines are to be tested frequently, a higher-priced speed indicator known as a "tachometer" may be used. This device when placed against the shaft of any revolving machine indicates the speed in R.P.M. instantly.

223. IMPORTANCE OF RESISTANCE TESTS ON INSULATION

As previously mentioned, the megger and Wheatstone bridge are very effective devices for testing the insulation resistance of electrical machines and circuits. Regularly inspecting the motors and generators with one or the other of these instruments will often save many serious cases of trouble or winding failures. In this manner it is also possible to prevent delays in production caused by the shutdown of machinery, on which the faults could have been located and repaired in advance by proper inspection and testing with such instruments.

In medium-sized and larger plants, instruments of this type will very soon save much more than their original cost.

Electric instruments are usually furnished by the employers or plant owners, although in some cases the maintenance man and electrician can well afford to own one or more low-priced portable instruments for the great convenience and aid they give in his work.

Whether these instruments are supplied by the employer or owned by the electrician, they should always be handled with proper care and intelligence.

Most meters are delicate devices and they should not be carelessly handled or banged around. Extreme caution should always be used not to connect ammeters across a line or in circuits with greater loads than the ammeter is designed for. The same warning applies to connecting voltmeters and wattmeters, which should never be connected to circuits of higher voltage than the instrument is made for.

224. COMMON TOOLS FOR MAINTENANCE WORK

A few of the more common tools required by the electrical maintenance man are as follows:

1. Knife
2. Pliers (side cutting)
3. Gas pliers
4. Screw drivers
5. Adjustable wrenches
6. Pipe wrenches
7. Machinist's hammer
8. Center punch
9. Cold chisels
10. Soldering iron
11. Blow torch
12. Tin snips
13. Bearing scrapers
14. Speed indicator
15. Air-gap gauge
16. Files; flat, round, and three-cornered
17. Hack saw
18. Breast drill

This list covers the more essential tools for ordinary jobs. Various other tools can be added for certain things, according to the class of work and equipment to be handled. A few good pointers in

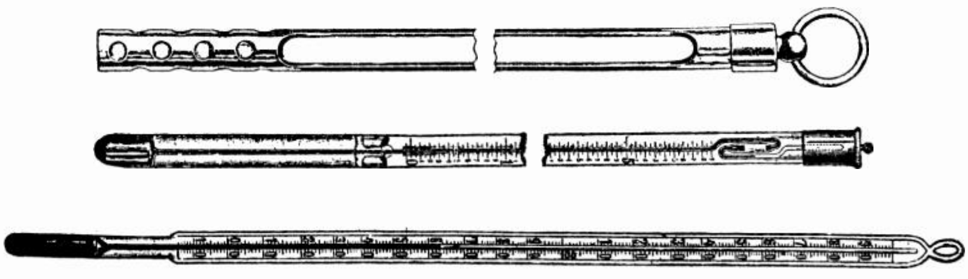

Fig. 156. Convenient thermometers of the above type are used for determining the temperature of the machine windings, by attaching the bulb to the windings with a small amount of putty.

the selection and use of these tools are given in the following paragraphs.

An electrician's knife should be a good substantial one, with one sharp blade that can be used for the removal of insulation from conductors, and one general utility blade for miscellaneous cutting, scraping, etc.

The most common and handy size of pliers is the 7-inch length, and if only one pair is used this should be the size. If one wishes to carry or to have on hand two or more sizes, the 6-inch and 8-inch sizes should also be included.

Cheap pliers never save any money, and only good pliers with strong jaws and good cutting blades should be purchased. Pliers larger than 9-inches are seldom used, except for the handling of very heavy wires and cables. Good pliers are made of the best grade of tempered steel and should never be held in the flame of a torch or allowed to become overheated in any way. Pliers should not be used to cut hard steel bolts or spikes.

The gas pliers are very convenient for holding cable lugs when heating them to melt solder and apply to cable ends, and for other general uses such as gripping bolts, nuts, and small parts. An 8 or 10-inch size is usually most convenient.

You should have at least three or four sizes of screw drivers and sometimes more. It is well to have one short and one long screw driver, both with points to fit a No. 7 wood screw; one short and one long driver to fit a No. 10 wood screw; and at least one large screw driver for No. 14 to No. 16 screws.

Never use a screw driver for a crow bar or chisel, as such abuse will only bend their bits or split the handles and render them unfit for the purpose for which they were intended.

If screw drivers become dull they can be carefully reground on the flat side of an emery wheel. Never grind them to a sharp point, as it tends to make them slip out of the slots in screws.

Adjustable wrenches should be of the 6-inch, 8-inch and 10-inch sizes, and these will handle all except the very heavy work. These tools are used for tightening bolts and nuts on motors, controllers, and all kinds of electrical equipment; and both for taking apart and reassembling motors and machines to be repaired.

When using an adjustable wrench, always tighten the jaws securely on the nut before applying any pull on the handle, as this will avoid slipping and injury to the operator as well as "rounding" of the corners on nuts or bolt heads.

Never use a wrench upside down or backward, and don't hammer the handles, as it will only spring the jaws and spoil the wrench. Wrenches are made with handles long enough to apply by a steady pull all the pressure their jaws will stand.

Pipe wrenches should be used for loosening stubborn or worn nuts on which the adjustable wrench slips, and also for making BX or conduit connections. One 10-inch and one 12-inch pipe wrench will usually be sufficient for ordinary repair work.

A good hack saw is indispensible for cutting bolts, BX, conduit, and heavy cables. Usually the 12-inch rigid or non-adjustable frame is best, and several good sharp blades should always be on hand for this saw.

When using a hack saw, the object to be cut should be securely held in a vise or clamp. If the object is allowed to wobble or twist it will crack the teeth out of the saw blade.

A machinist's hammer of one lb., one and a half lbs., or two lbs. weight will usually be found most convenient.

Center punches are very handy for marking places for drilling holes in metal, or for marking the end-plates of motors or machines before they are removed, so you can be sure of getting them replaced properly.

A small breast drill or Yankee drill with a dozen or more short drills will be found very convenient in making many time-saving repairs.

Several sizes of cold chisels are needed for cutting bolts, screws, metal strips, etc., on which the hack saw cannot be conveniently used.

Tin snips are very convenient for cutting strips of hard insulation, such as fibre, or for cutting shims of thin metal for lining up bearings or machine bases. They can also be used for cutting shims to place under field poles when adjusting air gaps on the poles of motors or generators.

A set of bearing scrapers, such as used on automotive work are usually very convenient. These are to be used for scraping sleeve-bearings to fit the shafts of motors or generators.

An air-gap gauge consists of a group of thin metal feeler gauges that can be used for determining the air gap between the armature core and various field-pole faces.

It is quite important to keep the armature centered in the machine, in order to secure best operation, and when bearings become worn and allow the armature to drop below the center, an air-gap gauge can be used to re-center the armature or determine which poles it is closest to.

One or more pieces of hack saw blade can be easily fitted with file handles and used for undercutting mica on small and medium-sized machines, as was explained in a previous article.

Flat files are very convenient for resurfacing and dressing the faces of contacts on controllers, and hundreds of other uses which are not necessary to mention, as most everyone knows the common uses for a file.

Where most of the work to be done is within reach of electrical circuits of the proper voltage, an electric soldering-iron is generally most convenient. Where electric supply of the proper voltage is not available or where very heavy soldering is to be done, a blow torch is essential. One or more soldering coppers can then be used, by heating them in the flame of the blow torch.

225. OPERATION AND CARE OF BLOW TORCHES

At this point it will be well to give a few general hints on the use of gasoline blow-torches.

A torch of one quart size is usually most convenient for ordinary work. To fill the torch, unscrew the cap in the bottom and pour the gasoline in the opening with a funnel. If any gasoline is spilled on the bottom of the torch it can be run inside by gently rocking the torch back and forth until most of it runs into the opening.

After filling, replace the cap, making sure that the composition washer is in place, to seal the torch air-tight and prevent leakage of gasoline. Tighten the screw cap securely and pump a small amount of air into the tank. Six to ten strokes of the pump is sufficient for starting a torch. Then hold the hand or some object over the torch nozzle, tipping the torch back slightly, and open the needle valve a small amount. The gasoline which is allowed to escape will then drain into the small vessel or cup under the torch. The cup should be nearly full before the valve is closed.

This gasoline should then be carefully ignited with a match and allowed to burn away almost completely before opening the valve again.

This flame heats the torch nozzle and gas generator so the liquid gasoline will be turned into vapor as it escapes. This is necessary for proper operation and to secure the full heat of the flame.

When the torch is well-heated, open the needle valve and adjust it until the flame is a sort of blue color with a slightly pink tinge.

If the torch is operated in a breeze or wind, turn the torch so the flame points against the breeze. This will tend to confine the heat of the flame where it will do the most good and keep the torch hot enough to operate.

When through using the blow torch, it should be extinguished by closing the needle valve; never by blowing or smothering the flame. After extinguishing the torch, let it stand a few minutes; then open the needle valve until a hissing sound is heard. This relieves the pressure in the tank and the needle valve can then be closed tightly and the torch put away until is to be used again.

Never use a pliers on the needle valve or you may damage the soft metal seat of the valve. **Never use one blow torch to heat another, or it may result in an explosion and dangerous burns.**

These few general hints on the types of tools and the methods of their use are intended simply to aid those who have never used tools of this kind to become properly acquainted with them.

Thoughtfulness, pride, and care in your work, and the application of a little mechanical ability along with practice, are all that are required to make most anyone proficient in the use of these tools and in ordinary electric maintenance work.

Always do all repair work neatly and thoroughly. You will find that in the long run it saves time and trouble. Take a reasonable pride in all electrical machinery and equipment which you may be operating or maintaining, and also in your knowledge of the proper operation and care of this equipment.

Conscientious and intelligent application of the knowledge you can gain from this section, along with the actual experience obtainable on D. C. machines in this department of the shop course, should enable you to qualify in the operation or maintenance of practically any Direct Current equipment.

COYNE
Electrical School
CHICAGO ~ ~ ILLINOIS

ESTABLISHED 1899

ALTERNATING CURRENT
AND
A. C. POWER MACHINERY

Section One

Nature of Alternating Current
Generation of Voltage, Sine Curve, Values, Frequency
Single-phase and Polyphase Currents
A. C. Circuits
Inductance, Capacity, Impedance
Ohms Law for A. C., Circuit Calculations
Power Factor
Lagging and Leading Currents
A. C. Power Problems
Power Measurement
Meter Connections

ALTERNATING CURRENT

Alternating current electricity provides one of the greatest fields of opportunity and one of the most fascinating branches of work and study in the entire electrical industry today.

In the last few years, alternating current and A.C. machines have come into such extensive use in nearly all industries that no electrical man can afford to be without a knowledge of this very interesting form of energy and equipment.

One of the greatest advantages of alternating current is that it can be much more economically transmitted over long distances than direct current can. This is due to the fact that the voltage of alternating current energy can easily be stepped up to very high values by means of transformers.

The economical high-voltage transmission of alternating current makes it possible to generate this form of energy more cheaply in large and efficient central generating stations or power plants, and then transmit it to towns and factories at considerable distances.

High tension transmission lines also make possible the use of water power produced in large hydro-electric plants which are often a long distance from the towns and places where the electrical energy is used.

Thousands of miles of high-voltage transmission lines, operating at voltages from 66,000 to 220,000, tie together the great steam and hydro generating stations in vast super-power networks throughout this country. These lines carry hundreds of thousands of horse-power of clean, silent, and efficient electric energy to turn the wheels in our great factories, to light our homes and city streets, and to operate electric railroads, etc.

Interconnection of the greatest power generating plants and centers by high voltage A. C. lines makes possible greater economies of operation and dependability of electric supply than can be obtained in any other way. It tends to balance or equalize the varying loads of the different towns, communities, and factories, into a more uniform average load on all of the interconnected generating plants; and thereby reduces the number of spare generators that must be carried in any of the plants for peak loads. Connecting a great number of power plants together also makes it possible for one generator, plant, or line to be shut down for repairs without interrupting the electric supply to the users, as the full load can be carried temporarily by the other plants on the system.

For these reasons, alternating current transmission lines have been developed with tremendous rapidity so that at present their voltages run as high as 220,000, and new power lines are constantly being installed in a great network throughout the entire country. Engineering tests and experiments are now being carried on toward the development of 330,000-volt transmission lines.

Even with our present super-power lines it is possible to economically transmit many thousands of horse power over distances of several hundred miles.

Great generating plants in Chicago have supplied power to the city of Pittsburg, and have for a short test period supplied power to light the streets of Boston. Chicago has some of the largest generating plants in the world, and these plants are connected with others in a vast system with transmission lines reaching to the eastern and southern coasts of the U. S., and long distances north and west.

Great steam generating plants producing from 100,000 kw. to 500,000 kw. each feed the alternating current to the transmission lines; and new power plants are constantly being built to supply the ever-increasing demand for electric power.

It is almost impossible to comprehend the tremendous rate at which alternating-current electrical equipment has been developed, and the present rate of expansion of this great industry.

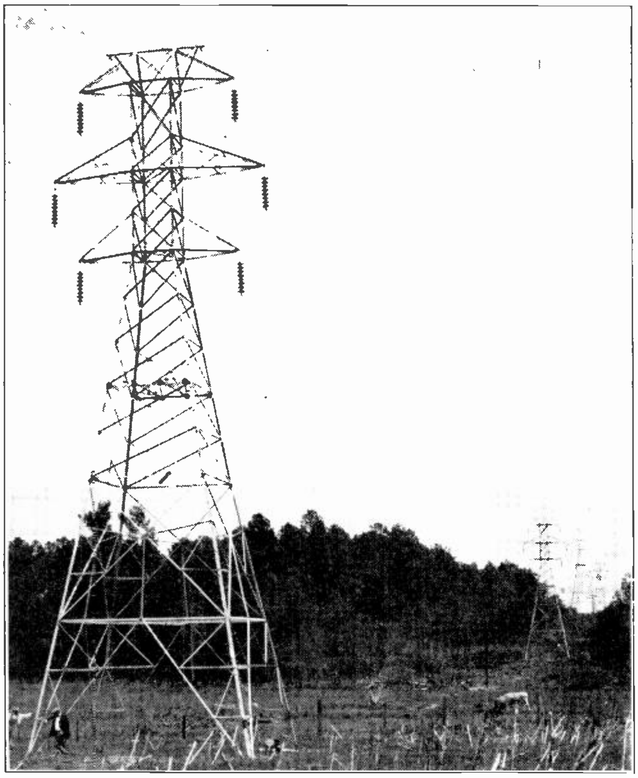

Fig. 1. This photo shows a high voltage power line of the type which carry thousands of h. p. of electrical energy throughout the country.

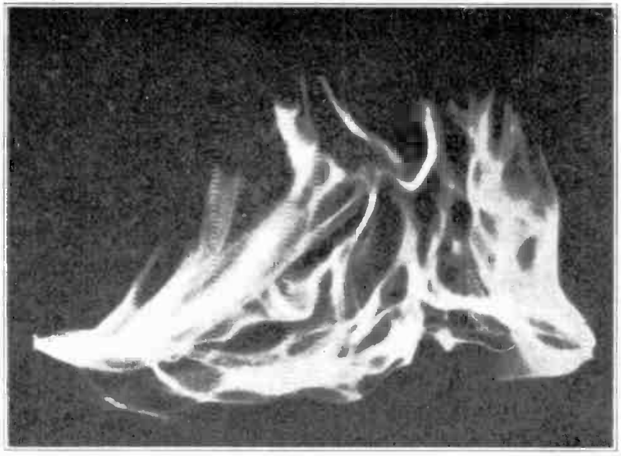

Fig. 2. The above view shows a high voltage arc created by passing current at a potential of several hundred thousand volts through air.

In 1889 an A. C. generating unit of 400 kw. capacity was put into operation, and was thought to be a very large unit at that time. The size of A. C. generators kept increasing until, in 1917, units of 45.000 kw. were in use, and a unit recently installed in one of Chicago's new power plants is of 208.000 kw. capacity. This is equivalent to about 275,000 h. p. Fig. 3 shows a mammoth steam-turbine-driven A. C. generator of 160,000 kw. capacity.

Hydro-electric plants have also developed rapidly. In 1890 only a few thousand h. p. were produced at Niagara Falls, but now its electrical output has been increased to over one million h. p.

A new hydro plant of the Philadelphia Electric Company, at Conowingo, Maryland, produces nearly one-half million h. p. of electric energy; and there are hundreds of other water-power plants which generate from 10,000 to 100,000 h. p. and more each. Fig. 4 shows a photo of the great dam and power house at Conowingo.

The operating of all these steam and hydro-electric power plants provides steady jobs at good pay and clean, fascinating work, for many thousands of trained electrical men. The construction of new plants and power lines, and the inspection and maintenance of existing lines, employs thousands more.

Then there is the manufacture, installation, and maintenance of the vast number of A. C. electrical machines and devices that use the millions of h. p. generated by all these power plants.

Electrical manufacturers produce approximately

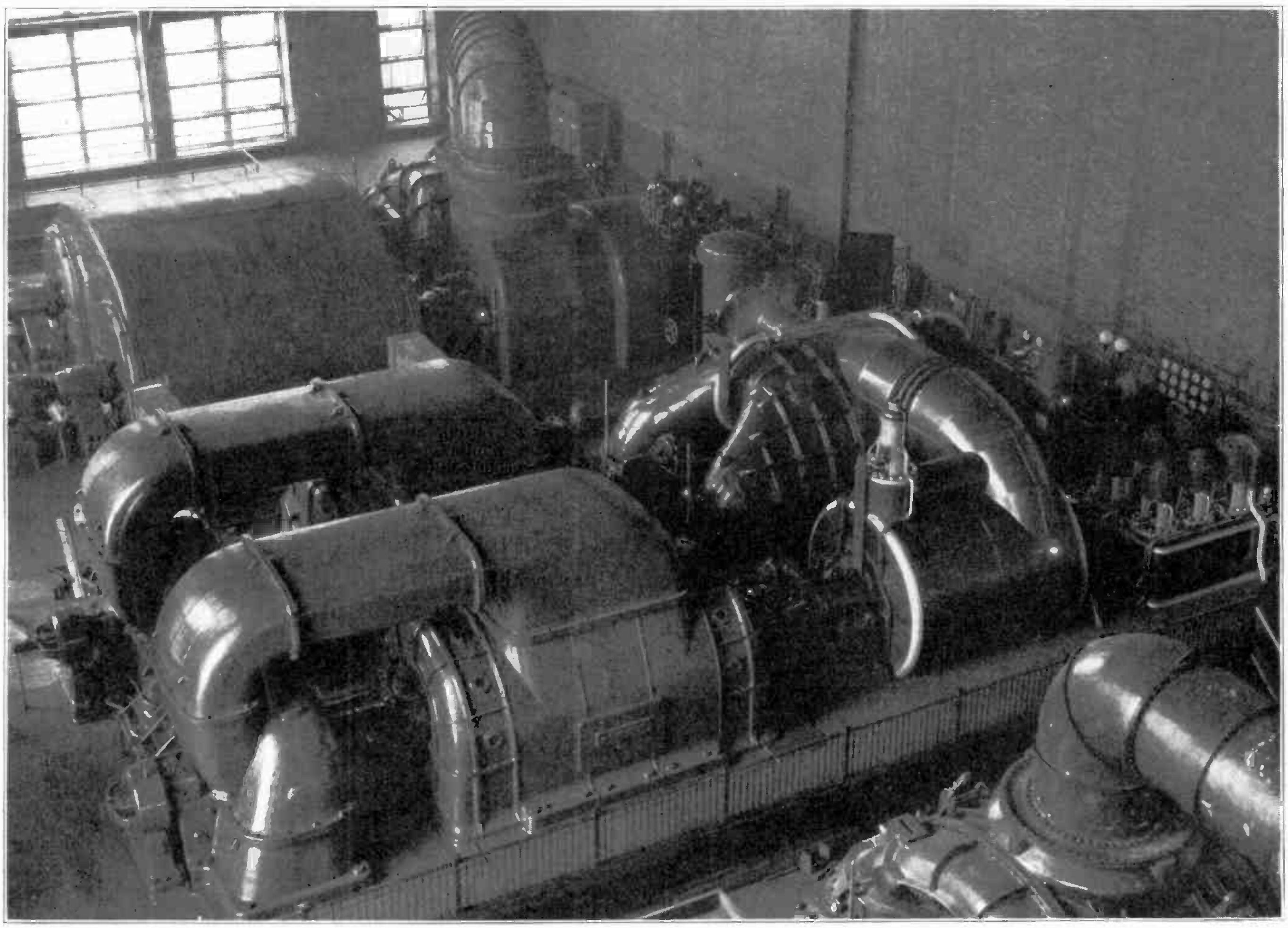

Fig. 3. Modern steam generators of the above type produce many millions of h. p. of electrical energy, for use in lighting and the operation of power machinery. The generator shown in this photo is of 165,000 kw. capacity and is driven by steam turbines. (Photo courtesy of American Brown Bovery Co.)

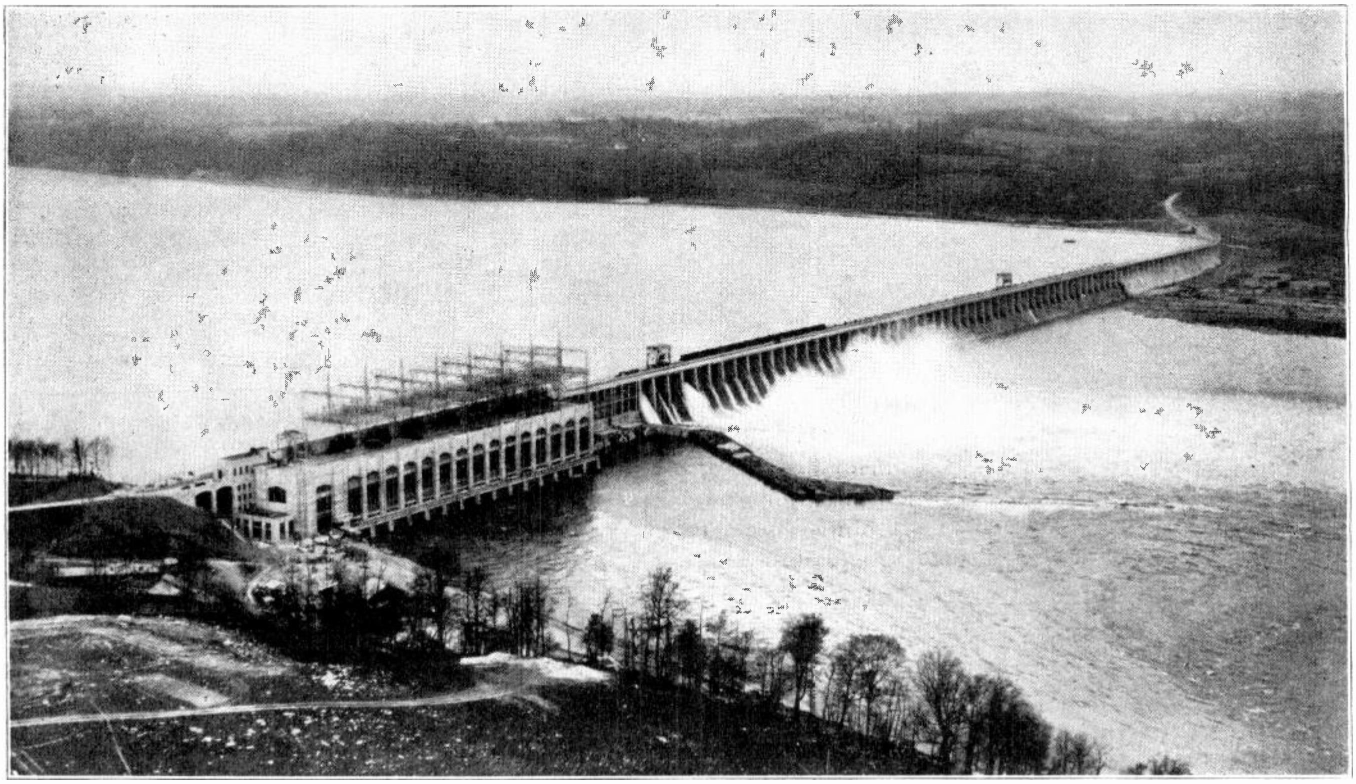

Fig. 4. Enormous hydro-electric generating stations also produce many millions of h. p. to supply the extensive needs for electrical energy. This hydro plant is at Conowingo, Md., and is one of the largest in this country. It produces several hundred thousand h. p. (Photo courtesy Philadelphia Electric Co.)

2½ billion dollars worth of electrical equipment yearly. Try to imagine, if you can, the additional number of men required each year to produce, install, operate, and maintain that equipment.

Approximately 80% of all the money invested in the electrical industry in the U. S. is invested in sixty-cycle, A. C. equipment; and about 90% of all the electric power generated is A. C. So you can readily see the value of a good knowledge of this branch of electricity.

Manufacturing and industrial plants in this country are over 75% electrified at present. The machines in these plants are largely driven by A. C. motors, because of their practically constant speed, rugged construction, and low maintenance costs. Fig. 5 shows a typical example of A. C. motors used for individual drive of machines in a textile mill.

The most common type of A. C. motors have no commutators or brushes, which greatly reduces their wearing parts and the amount of care they require.

Special types of A. C. motors with high starting torque have been developed for certain uses for which D. C. motors were formerly considered necessary, and now there are A. C. motors available for practically every need.

Alternating-current synchronous motors are ideal for operating equipment where absolutely constant speed is required.

In addition to the hundreds of thousands of h. p. used in A. C. motors, factories also use alternating current very extensively for spot welding and butt welding machines, enameling ovens, heat-treating furnaces, and other processes, as well as for lighting.

Sixty-cycle alternating current is very suitable for lighting with incandescent lamps, as the periods of zero voltage between the alternations are so very short that they do not allow time for any noticeable dimming of the light from the lamp filaments. So wherever alternating current is used for power purposes it is also used for lighting; and in homes, offices, and stores alternating current is by far the most generally used for lighting.

Some very important branches of the electrical industry actually depend upon alternating current for their existence. Radio is one of these, and as the energy used in radio transmission is high-frequency A.C., the study of alternating current principles is very essential to anyone who plans to follow radio work.

The increase in the use of alternating current in the last few years and the thousands of uses which have been developed for it so far, make it almost impossible to over-estimate the extent to which A. C. will undoubtedly be used in the near future.

The present rate of development and expansion in this field requires thousands of additional trained men yearly. There are thousands of electricians in the field today who have followed D. C. work almost exclusively and know almost nothing about the principles of alternating current and A. C. machines.

Therefore, this branch offers the finest of opportunities to trained practical men who have a good knowledge of alternating current.

And let us emphasize again that, in addition to being a very valuable subject to know, alternating current electricity is one of the most fascinating and interesting subjects any ambitious student can ever hope to find.

Alternating current differs from direct current in many ways, but practically all the principles of electricity which you have learned so far can, with a few modifications, be easily applied to A.C.

Alternating current is often thought to be a difficult subject to master. It does not need to be at all, when properly explained in a practical manner.

In the following pages the principles of alternating current and the operation and care of A. C. machines will be covered in a simple non-technical manner, for the needs of the practical man.

Study these pages carefully for the sake of your future earning capacity, and to qualify yourself for some of the splendid opportunities in this field.

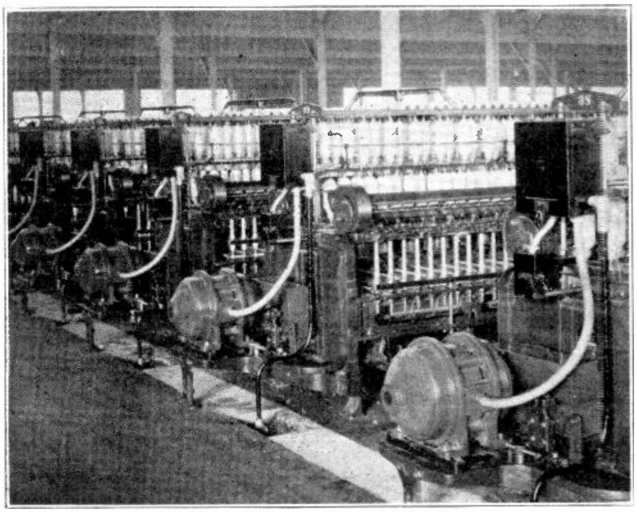

Fig. 5. This view shows a number of A. C. motors being used for individual drive on machines in a textile mill. Thousands of factories and industrial plants use electric motors in this manner for driving their various machines and equipment. (Photo courtesy G. E. Company)

1. NATURE OF ALTERNATING CURRENT

In previous sections of this Reference Set we have already explained to some extent the difference between alternating current and direct current. We shall, however, review some of these points and also take up others in detail, as it is very important to have a thorough understanding of the nature and principles of alternating current, in order to properly understand the operation of A. C. machines.

Alternating current is current that constantly changes in value and periodically reverses in direction.

This reversal of the current is caused by the armature conductors passing first a north and then a south pole in the generator.

You have learned that A. C. is induced in the conductors of any ordinary generator armature, and that to obtain D. C. we must rectify the current from a generator armature by means of a commutator.

Alternating current can be made to produce heat, light, and magnetic effects just as D. C. can. The principal difference in the magnetic fields of A. C. and D. C. circuits is that alternating current produces a constantly varying flux, the lines of which are always in motion or expanding and contracting around the conductor. This alternating or moving magnetic field of alternating current is what makes possible the operation of transformers, to step the voltage up or down as desired.

2. INDUCTANCE AND CAPACITY IN A. C. CIRCUITS

The moving A. C. flux also sets up in any A. C. circuit, **self-induction** due to **inductance.** This inductance and also a condenser effect, or **capacity,** which is caused by the constantly varying voltage of A. C. circuits, are the two principal differences between A. C. and D. C. circuits.

We have learned that the important factors in any direct-current circuit are **pressure, current,** and **resistance.** We have the same three factors to consider in any A. C. circuit and also the two additional factors—**inductance** and **capacity.**

Ohms law applies also to A. C. circuits, with a slight modification to include the inductive and capacity effects on the current, as well as the effects of resistance.

Many of the most important advantages of A. C. and many of the greatest achievements in the electrical industry are based on these two additional factors in A. C. circuits—namely, **inductance** and **capacity.** They will both be thoroughly explained a little later.

3. GENERATION OF ALTERNATING VOLTAGE

The development or generation of alternating-current voltage is shown in Fig. 7. At the left

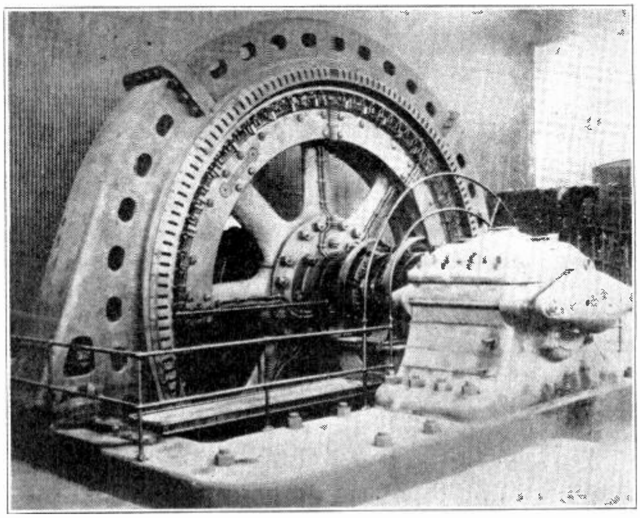

Fig. 6. This large A. C. induction motor is in use in a steel mill and is rated at 6500 h. p. (Photo courtesy G. E. Company)

of this figure is a sketch of a simple two-pole generator in which the progress of the conductor throughout one revolution is shown in eight steps of 45° each. The successive values of voltage which will be induced in this conductor are plotted or projected along a horizontal base-line at the right side of the figure.

The values above the line are positive voltage values and those below the line are negative. Electrical degrees and time are also plotted along this axis line. The electrical degrees are represented by spaces of uniform length and drawn to scale, for example ¼-inch for each 45 degrees, or ½-inch for each 60 degrees, etc.

Other spacing values can be used to suit the size of the drawing desired.

Time "later" is indicated in a right-hand direction and time "earlier" in a left-hand direction. To illustrate this, a vertical line "X Y" is drawn through the axis; and all values on the right-hand side of this vertical line are later in time, while all values on the left are considered to be earlier in time.

While the conductor shown at No. 1 is moving in the neutral plane of the magnetic field it will have no voltage induced in it. Therefore, the voltage value at this point will be as shown at "a" on the axis line. The axis line always represents zero voltage value.

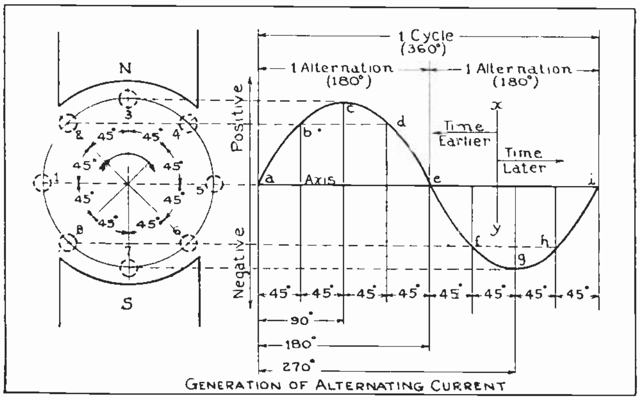

Fig. 7. The above diagram illustrates the manner in which alternating voltage is produced in a simple two-pole generator. The sine curve shows the variations and reversal of voltage for one revolution of the armature. Study this diagram very carefully with the accompanying explanation.

As the conductor moves around the armature 45 degrees in a clockwise direction it comes to position 2, where it is beginning to cut into the field flux of the N pole, and at a more and more abrupt angle. At this point the voltage value will be as shown at "b", or the point where the dotted line running to the right from conductor 2 intersects the vertical time line which is just 45 degrees later than the one at "a".

When the conductor moves another step, or 45 degrees, farther to position 3, it will then be cutting at right angles to the dense flux of the N pole, and will produce a voltage value as shown at "c", where the dotted line from the conductor intersects the time line, which is now 90 degrees later than the one at "a".

When the conductor moves to position 4 it is beginning to leave the flux from the N pole and its induced voltage will be somewhat lower, as shown at "d". As the conductor moves on to position 5 it is again passing through the neutral plane or at a point where it doesn't cut any appreciable amount of flux, and its voltage will again be at zero value, as shown at "e".

The voltage values which this conductor will produce in passing from position 5 back to 1 will be the same as those from 1 to 5, except that the voltage will be in the reverse direction, as the conductor is now cutting in the opposite direction through the flux of the S pole. These negative values are represented at the points, f, g, h, and i, or below the axis line.

The armature conductor has now passed through a complete set of positive and negative values and through one complete revolution or 360 electrical degrees.

4. SINE CURVES; ALTERNATION, CYCLE, FREQUENCY

If we connect the points a, b, c, d, e, f, g, h, and i all together with a curved line, that line will form what is known as a **sine curve.** This curve gives us a clear mental picture of the manner in which the voltage varies in amount and reverses in direction in an alternating-current circuit.

The values from "a" to "e" are all positive and constitute 180 E°, or one **alternation.** The values from "e" to "i" form the negative alternation. These two successive alternations, one positive and one negative, complete one **cycle.**

If we were to go on revolving the conductor rapidly it would produce one cycle after another of alternating current, provided the coil were connected to a closed circuit. The number of these cycles which occur in each second of time is called the **frequency** of an alternating current circuit, and is expressed in cycles per second. Nearly all A. C. systems in this country today use 60-cycle frequency.

Examine the diagram in Fig. 7 very carefully, until you are sure you know the number of electrical degrees in one alternation and in one cycle.

A conductor in a generator must always pass one pair of poles, or one north and one south pole, to complete a cycle. Therefore, the greater the number of poles in a generator the greater will be the number of cycles it will produce per revolution. The frequency of any A. C. generator can always be determined by the following simple formula:

$$f = \frac{RPM}{60} \times N$$

In which:

f = frequency in cycles per second
RPM = revolutions per minute of generator
60 = no. of seconds per min.
N = no. of pairs of poles in generator

5. FLOW OF ALTERNATING CURRENT

If an alternating voltage such as shown in Fig. 7 is applied to a closed circuit, alternating current will flow. The current will, of course, vary in amount and reverse in direction, just as the voltage does. These alternations or impulses of current can be shown by a curve similar to the one for voltage in Fig. 7. Current first starts to flow around the circuit in one direction, and continues in this direction during one alternation, or 180°. In a 60-cycle circuit this would be for 1/120 part of a second.

During this period the current value or intensity keeps gradually increasing up to maximum during the first 90°, or one-half alternation. Then it starts to decrease in amount, but continues in the same direction for another 90°, or the last half of the alternation.

When the current in this direction has fallen to zero value, it then reverses and flows in the other direction for one alternation or 1/120 part of a second, again rising and falling in value or amount.

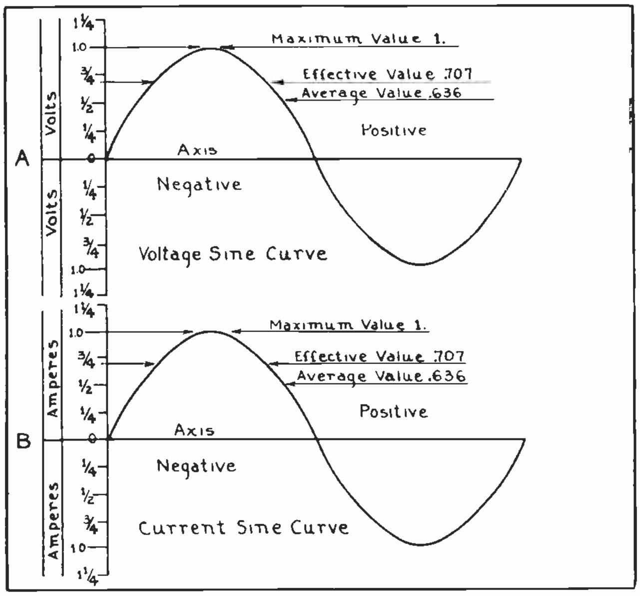

Fig. 8. These sketches show the maximum, effective, and average values of alternating voltage and current.

6. MAXIMUM AND EFFECTIVE VALUES OF ALTERNATING CURRENT

Fig. 8-A shows a curve for one complete cycle of single-phase alternating voltage, and Fig. 8-B shows a curve for the current that we will assume is caused to flow by that same voltage cycle.

These curves show **maximum values** of one volt and one ampere for this circuit. You will note that these maximum values last for only a very short period during each alternation. So, if we were going to determine the heating effect or power that would be continuously produced by such an A. C. circuit with one volt maximum pressure and one ampere maximum current, we could not expect as great a result as from a D. C. circuit with one volt continuous pressure and one ampere continuous current.

By actual test we find the heat produced by the A. C. circuit is about 70%, or to be more exact .707 of that produced by the D. C. circuit.

We therefore say that the **effective** voltage and current values of an A. C. circuit are .707 of the maximum values. It is this effective value that we consider in ordinary work and calculations with A. C. circuits. Ordinary A. C. voltmeters and ammeters are calibrated to read the effective values and not the maximum values.

Therefore, if an A. C. circuit has meter readings of 100 volts and 100 amperes, we know these to be the effective values; and this circuit would produce just as much heating effect as a D. C. circuit of 100 volts and 100 amperes.

Compare carefully the effective and maximum values shown in Fig. 8. You will note that the effective value is nearly three-quarters of maximum value.

If an A. C. circuit has a maximum voltage value of 100 volts, the effective value would be .707 × 100, or 70.7 volts.

7. CALCULATION OF EFFECTIVE AND MAXIMUM VALUES

The effective values of an A. C. voltage or current curve for any alternation, can be calculated by what is called the **root mean square** (R.M.S.) method.

This calculation is made by getting the instantaneous values of the curve at points one degree apart and squaring all these values. Next all these squares are added together and averaged, by dividing the sum by the number of squares. Then, taking the square root of this average, we would have the root mean square; or, in other words, the square root of the average square of the separate values.

This method of squaring the curve values and then getting the square root to obtain the effective value, is used because the **heating effect of any A. C. circuit is proportional to the square of current at any instant.**

The process just described may seem somewhat technical, but with a little reviewing you will find that the principle is quite simple.

You may not have occasion or need to use the R.M.S. method in any calculation in your ordinary electrical work for some time; but it may be very handy for some future reference, so it is given here for your convenience at any later time. It is also given as a matter of interest, so you may know how the effective value is obtained and where the figure .707 comes from.

Remember that an A. C. circuit will perform just as much work per volt and per ampere as a D. C. circuit, because ordinary A. C. meters read the effective values only, and these are the values commonly considered in A. C. work.

One of the most important points to be considered, however, is that to produce a given effective voltage in an A. C. circuit, the maximum voltage for its short periods during each alternation will be considerably higher than the effective voltage registered by the meter. This places a higher voltage strain on the insulation of an A. C. circuit of a given effective voltage value, than on a D. C. circuit of the same voltage.

When either the maximum or effective value of an A. C. circuit is known, the other can be found by one of the following formulas:

Effective value = Max. value × .707
Maximum value = Eff. value ÷ .707

It is often easier to multiply by the reciprocal of a number than to divide by the number itself, and the same result can be obtained by either method. You will recall that the reciprocal of a number is equal to 1 divided by the number. So, in the case of the effective value .707, its reciprocal is equal to $\frac{1}{.707}$, or 1.414.

Accordingly, the above formula for finding maximum value can be changed to read:

Max. value = eff. value × 1.414

The use of this formula is illustrated by the following example.

If we have a motor which is being rewound to operate on a 2200-volt circuit, what would be the maximum voltage stress on its insulation?

If the effective value is 2200 volts, then:

Max. value = 2200 × 1.414, or 3110.8 volts

This would be the maximum voltage impressed on the insulation of the motor winding and, allowing enough extra for safety factor to prevent possibility of puncture of the insulation, it would probably be insulated for 5000 volts or over.

8. AVERAGE VALUE OF ALTERNATING CURRENT

By referring again to Fig. 8, you will note that an **average value** of the curves is also shown. The average value is .636 of the maximum value. This figure is used in a few electrical calculations and in the design of electrical machines, but not a great deal in ordinary electrical work.

Because of the shape of the sine curves for alternating current and the fact that the heating effect is proportional to the square of the current values, the effective value is actually a little higher than the average value, as shown in Fig. 8.

The voltage alternations produced by an actual power generator would not be quite as smooth or perfect in shape as the curves shown in these figures. Instead they would have little irregularities or ripples in them; but as they follow the same general shape, all ordinary circuit calculations for A. C. are based on the true sine curves as shown.

9. SINGLE-PHASE AND POLYPHASE CURRENTS

You have already learned that A. C. circuits are of **single-phase, two-phase,** and **three-phase** types; and in the section on A. C. armature winding the method of generating single-phase and polyphase currents was explained. If you find it necessary to refresh your memory on these points, review pages 1 to 5 of Section Two of Armature winding.

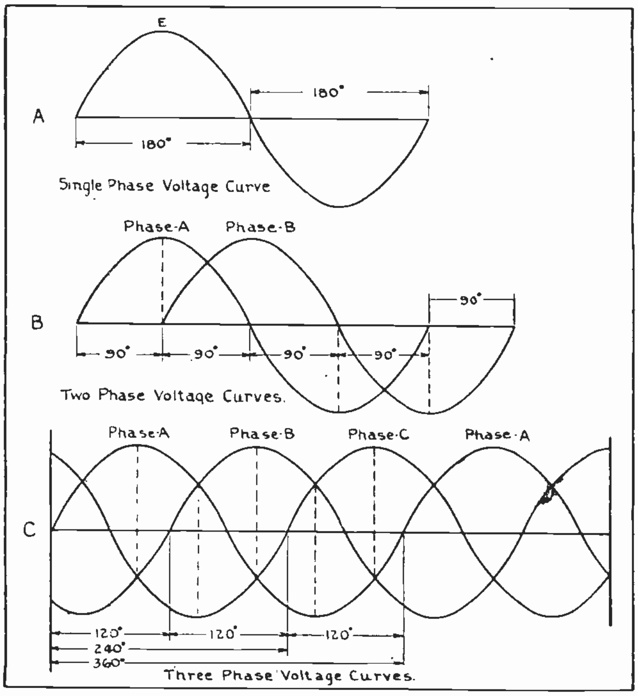

Fig. 9. The above diagram shows the sine curves for single-phase, two-phase, and three-phase alternating voltages.

You will recall that the term "phase" refers to the number of parts of an A. C. circuit or the number of separate sets of alternations in the circuit.

Fig. 9 shows three sets of curves for single-phase, two-phase, and three-phase circuits. The single-phase curve at "A" has successive alternations of 180° each. The two-phase circuits have two sets of alternations occurring 90° apart; that is, they start, reach their maximum values, and finish always 90° apart. Three-phase circuits have three sets of alternations, 120° apart, as shown at "C" in the figure.

You will recall that these alternations are generated with the various spacings in degrees, by spacing the armature conductors the same number of degrees in the generators.

Each alternation of any single-phase or polyphase circuit consists of 180°, and each cycle consists of 360°. Keep in mind also that the poles in an alternator are always spaced 180° apart, and that a pair of poles constitutes 360 electrical degrees.

Six-phase energy is also used in some cases, for converters and rectifiers. Fig. 10 shows a set of curves for six-phase energy. Two-phase circuits are still used to some extent in older installations. Single-phase and three-phase systems are by far the most commonly used. Single-phase systems are used extensively for incandescent lighting and small power motors, and three-phase systems are used almost exclusively for large motors, general power work, and transmission lines.

10. PHASE RELATIONS OF VOLTAGE AND CURRENT

The voltage and current of an A. C. circuit can both be shown in the same diagram by separate sets of curves drawn along the same zero or axis line, as shown in Fig. 11. This figure shows the curves for a three-phase circuit. The solid lines represent the voltage impulses and the dotted lines represent the current impulses.

In this diagram the current value is shown to be slightly less than the voltage value by the lower height of the curves; but the current alternations are **in phase** or in step with the voltage alternations. In other words, the current and voltage alternations of each phase start together, reach their maximum values together, and finish together.

This seems to be the proper or natural condition, as you know that the current variations are caused by the variations in pressure or voltage; so it would seem quite natural that the two should be in step, or "in phase", as we say.

It is possible, however, to have the current impulses occur **out of phase** with the voltage impulses in A. C. circuits, due to the effects of inductance or capacity in these circuits.

The current may either **lag** or **lead** the voltage, according to whether the inductance or capacity is greatest in the circuit. These conditions will be fully explained a little later.

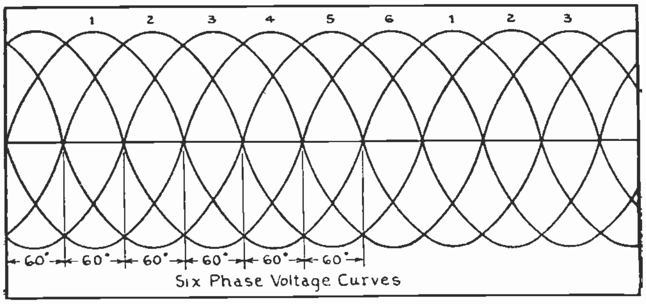

Fig. 10. This sketch shows the sine curves for the voltage of a six-phase A. C. circuit. Compare these sketches carefully with the ones in Fig. 9, and note the number of degrees spacing between each phase and the next.

11. EFFECT OF LAGGING OR LEADING CURRENT ON POWER

When the current and voltage impulses are in phase with each other, or working together in the same direction, they will, of course, produce more useful power in watts when they are out of phase or working in opposite directions part of the time.

When current and voltage are in phase as shown in Fig. 12, the product of the voltage and current values at any instant will give the watts power at that instant.

The power curve in this diagram is shown by the heavy line, and is all above the axis line, representing useful power.

In Fig. 13 the voltage and current are slightly out of phase, and the current is lagging a few degrees behind the voltage. This causes short periods during each alternation when the voltage and current are in opposite directions, as shown between the lines "a" and "b". During this period there is no useful power in watts produced and the power curve is shown below the axis line, representing what is known as **wattless power.**

This wattless power does not produce any useful power on the system, but merely produces additional heating of the conductors, and thereby limits the capacity of generators, motors, and lines in which this condition exists.

When multiplying the values of voltage and current curves to obtain the power in watts at any instant, the polarity of the curves must be carefully observed. When voltage and current curves are of the same direction or polarity, their product will all be positive or useful watts, and is shown by the power curve above the axis line. At points where the voltage and current curves are of opposite polarity, their product will give negative or wattless power, shown by the power curve below the axis line.

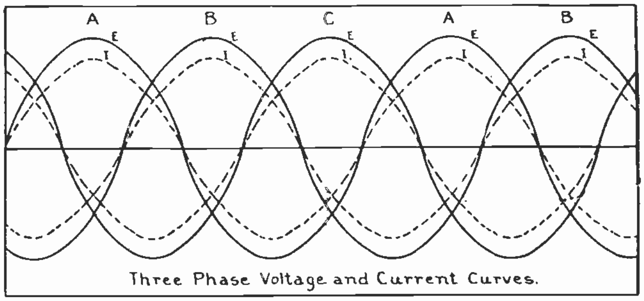

Fig. 11. Voltage and current curves of a three-phase circuit. The voltage is shown by the solid lines and the current by the dotted lines.

12. A. C. CIRCUITS

The practical man will often have occasion to make simple measurements and calculations with the voltage, current, and power of A. C. circuits, in his work in the field as an electrical construction man, power plant operator, or maintenance man.

These calculations can be made with A. C. circuits in very much the same manner that you have already learned for D. C. circuits; and just as easily, once you have a thorough knowledge of A. C. principles and the important factors which control the current and power in A. C. circuits.

It is sometimes difficult for a student to see how these calculations can be made with A. C., because of the manner in which the voltage and current are continuously and rapidly varying in value and reversing in direction. It is our purpose to simplify these points and avoid the unnecessary misunder-

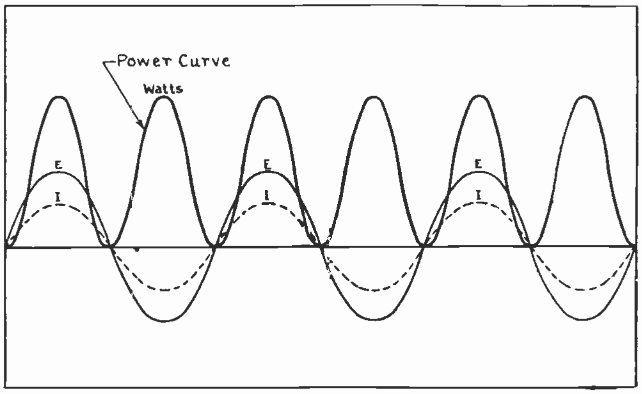

Fig. 12. This diagram shows the curves for the voltage, current, and power of single-phase A. C. circuit, in which the voltage and current are in phase with each other.

standing and difficulties which so frequently worry students and electricians who do not have a proper understanding of the simple fundamentals of alternating current.

An excellent fact to keep in mind at all times is that **an alternating current circuit can at any particular instant be compared to a D. C. circuit.**

As we usually work with the effective values of current and voltage in A. C. circuits and can always consider the circuit during a certain period of one alternation, or as the current is flowing in only one direction for the moment, this greatly simplifies tracing the flow of current in the circuit and making any calculations with the current or voltage.

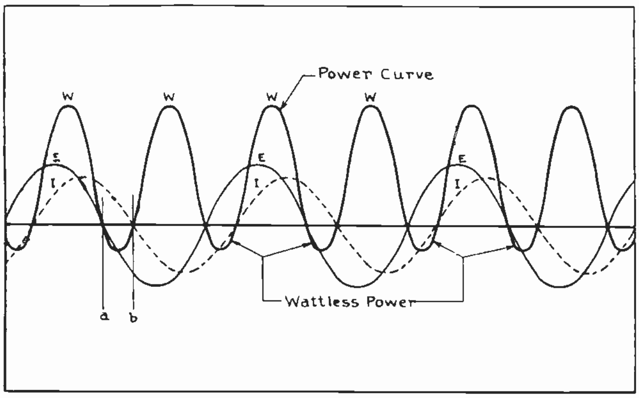

Fig. 13. Voltage, current, and power curves of a single-phase circuit in which the voltage and current are out of phase. The current, represented by the dotted curves, is shown lagging behind the voltage in this case.

13. INDUCTIVE REACTANCE, CAPACITY REACTANCE, and IMPEDANCE

We have already mentioned that in A. C. circuits there are always two other factors besides resistance which control the current flow, and these are **inductance** and **capacity.**

The effects or opposition offered by inductance and capacity to the current and voltage of an A. C. circuit, are known as **inductive reactance** and **capacity reactance.**

If resistance, inductive reactance, and capacity reactance all tend to control the current flow in A. C. circuits, we should be able to sum these all up together to get the total controlling effect on the current and thus simplify our calculations and problems. That is exactly what we can do.

The total opposition offered to the flow of current in an A. C. circuit, is called **impedance.** The impedance of an A. C. circuit therefore, compares with the resistance of a D. C. circuit.

The factors that make up the impedance can be illustrated in another way as shown in Fig. 14.

Impedance is here shown as being composed of the resistance and total reactance. The total reactance is then subdivided into its two classes, Inductive reactance and Capacity reactance.

The impedance and reactance of A. C. circuits are both measured in the unit ohm, to be comparable to the resistance in ohms.

The symbols used to indicate these very important factors of A. C. circuits are as follows:

Z = Total impedance in ohms
X = Total reactance in ohms
X_L = Inductive reactance in ohms
X_C = Capacity reactance in ohms
R = Resistance in ohms.

14. OHMS LAW FOR A. C. CIRCUITS

Now that we know the factors that control the flow of current in A. C. circuits and also that they can all be grouped into impedance in ohms, it is easy to see how Ohms law can be applied to an A. C. circuit by simply substituting the ohms of total impedance for the ohms resistance used in D. C. Ohms law.

From Ohms law for D. C. circuits we learned that the current flow could be determined by dividing the voltage by the resistance in ohms. Then for **A. C. circuits, the current can be determined by dividing the effective voltage by the impedance in ohms. Or,**

$$I = \frac{E}{Z}$$

And from this we can obtain by transposition the other two very convenient formulas:

$$Z = \frac{E}{I}, \text{ and } E = I \times Z$$

As inductance and capacity are such important factors in A. C. circuits, and are the cause of inductive reactance and capacity reactance, it will be well to learn more about them. In addition to offering opposition to the current and voltage, inductance and capacity also cause the current to be out of phase with the voltage in most A. C. circuits. For these reasons we will explain them in detail in the following paragraphs.

- IMPEDANCE
  - RESISTANCE
  - REACTANCE
    - INDUCTIVE REACTANCE
    - CAPACITY REACTANCE

Fig. 14. This figure shows the several different factors which make up the impedance in an A. C. circuit.

15. INDUCTANCE

Inductance is that property or ability which an electric circuit possesses for developing a counter electro-motive force within the circuit itself, by electro-magnetic induction.

The counter-E. M. F. due to inductance is caused by the variations or changes of current strength in the circuit, and the corresponding changes or variations in the magnetic flux around it.

All A. C. circuits will have a certain amount of inductance. In some cases this inductance is so small that it can be disregarded entirely in ordinary problems; while in other cases the inductive effect is so great that the whole operation of the circuit or device may depend upon it.

Inductance tends to oppose every change of current that occurs in any circuit, by generating or inducing a counter-voltage of self-induction as the changing flux cuts across the conductors of the circuit itself.

For this reason, A. C. circuits which have coils or machine windings connected in them, have a much greater inductance than straight wires or lines, or incandescent lighting circuits. This is because coils and windings set up very strong fields of concentrated magnetic flux, and as these lines of force cut across the turns of the coil they generate considerable counter-voltage of self-induction.

A. C. circuits to which are connected induction motors and transformers are very highly inductive, because of the windings of these machines and their location on the iron cores of the device in a manner which is ideal for establishing very strong magnetic fields.

Ordinary incandescent lighting circuits are considered as practically non-inductive because their inductance is so small that it is usually not considered in ordinary calculations.

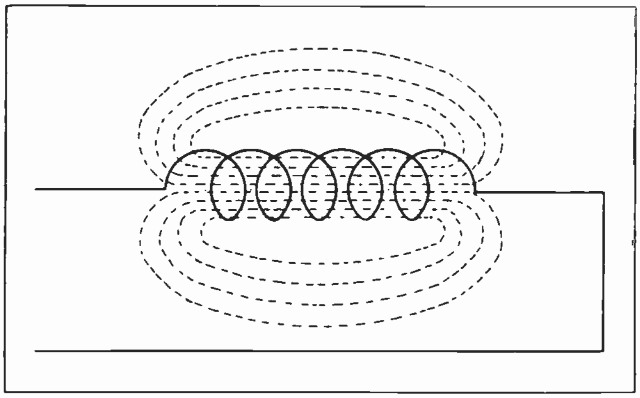

Fig. 15. The alternating flux around coils or wires of A. C. circuits produces voltage of self-induction and inductive reactance in the circuits.

The counter-voltage and inductive reactance which result from inductance in the winding of A. C. machines regulate or limit the current flow a great deal more than the ohmic resistance does. This is the reason why many A. C. machines and devices will be burned out almost immediately if they are connected to a D. C. circuit of the same voltage.

The direct current, being constant in value, does not have a continually varying or moving flux to set up the counter-voltage of self-induction.

The unit with which we measure inductance in a circuit is called the **henry. A circuit has an inductance of one henry when a current change of one ampere per second will induce one volt counter-voltage of self-induction in that circuit.**

The unit "henry" is sometimes known as the **coefficient** of **self-induction,** and the symbol for this unit, "henry", is the capitol letter L. Therefore, the expression 10 L means 10 "henrys" of inductance in the circuit.

Sometimes the inductance of a circuit is much less than one henry, and is expressed in milli-henrys (M. H.), or 1/1000 part of a henry.

16. COUNTER-VOLTAGE OF SELF-INDUCTION

Fig. 15 illustrates the manner in which the counter-voltage is build up by induction in a coil in an A. C. circuit. The current flowing through the coil sets up a strong magnetic field around all its turns.

We know that with alternating current these lines of force will be constantly expanding and contracting, and reversing in direction, as the current varies in amount and reverses in direction.

As the lines of force expand and contract, and cut across the turns of the coil in first one direction and then another, they will induce a **voltage which opposes the applied voltage.**

It will be well to keep this fact always in mind—**that the electro-magnetically induced currents are always in such a direction that the field set up by them tend to oppose or stop the force which produced them.** This is known as **Lenz's Law,** as it was disovered by an early experimenter named Lenz.

The manner in which the counter-voltage is set up by induction is illustrated more in detail in Fig. 16. In this figure we have shown a sectional view of a coil of wire as though the turns were all cut in half, lengthwise through the coil. The current set up by the applied line voltage at the particular instant, is shown flowing in at the lower conductor ends and out at the top ends.

The flux which will be set up by this current is shown around the lower end of the right-hand turn of the coil. Flux would, of course, be set up around all the turns but, for convenience in illustrating the principle of induction, is shown only around this one turn.

When the current of one alternation in the circuit builds up in the turns of the coil, the flux shown around the conductor or single turn will expand

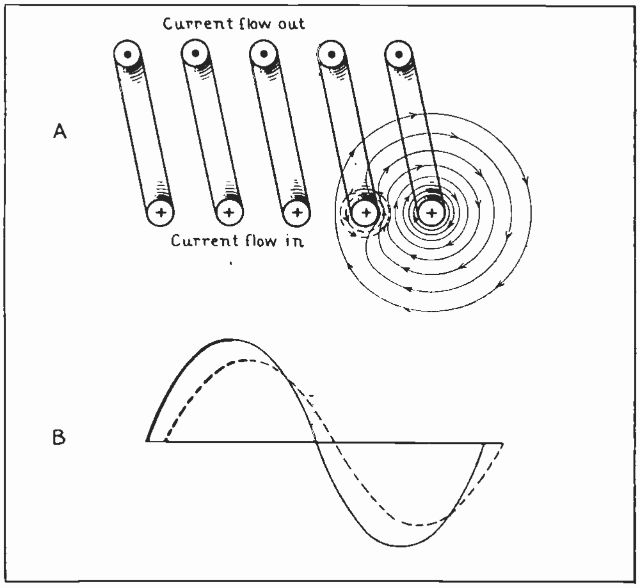

Fig. 16. The above diagram illustrates the manner in which the counter-voltage of self-induction is built up in an inductance coil.

more and more until the current reaches maximum value. During this building up of the current and flux, the lines will be cutting across adjacent turns of the coil in the direction shown, and will be inducing a voltage in them.

By applying the right-hand rule for induced voltages, we find that the direction of the voltage induced in the turn "B" of the coil, will be opposite to the applied voltage. This also checks with Lenz's law which says that the direction of the induced current will be such that its field will oppose the force that produces it.

When we consider that the flux of a coil in an A. C. circuit will be continually cutting across all turns of that coil, and that the counter-voltage it will induce in all these turns will add together as the turns are all in series, we can then see that the counter-voltage of self-induction in such a coil may greatly limit the flow of curent through it.

If we place an iron core in such a coil, and allow it to build up a much stronger field, this will greatly increase the inductance of the coil. Such coils are often called **choke coils** because of the "choking" or limiting effect which their counter-voltage has on the flow of alternating current through them.

A coil of several hundred turns wound on a large iron core and connected across a 110 or 220-volt, 60-cycle circuit, may produce nearly as much counter-voltage as the applied line voltage, and allow only a very small current to flow through the coil.

This explains why coils of A. C. devices or machines are usually wound with a much smaller number of turns than are D. C. devices for circuits of the same voltage; because on A. C. circuits the inductive reactance or counter-voltage controls the current even more than the ohmic resistance does.

This self-induced voltage caused by the inductance of a coil as shown in Fig. 16-A, being in a direction which opposes the applied line voltage, actually tends to make the current in the coil lag behind its voltage. That is, the current alternation does not reach its maximum value until a few degrees later than the voltage does, as shown by the curves in Fig. 16-B.

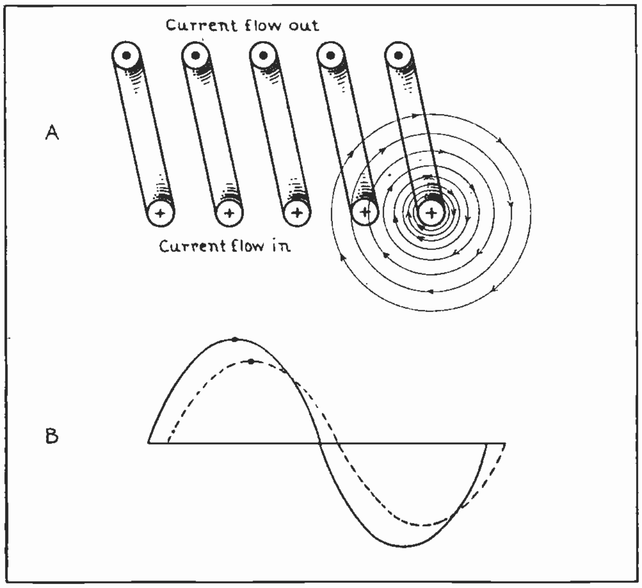

Fig. 17. This view shows the flux around one turn of a coil during the period when the current is at maximum value. The flux is neither contracting nor expanding at this period, and therefore produces no voltage of self-induction.

When the voltage of the alternation reaches maximum value, the current tends to stop increasing, but this causes the flux around the conductor to stop expanding and also to stop generating the counter-voltage in the turns of the coil. This allows the current to rise to its full maximum a little later than the voltage reaches its peak.

This is illustrated in Fig. 17-A, where the flux has stopped expanding and producing counter-voltage; and on the curves at "B" the current and voltage peaks are marked by the round dots.

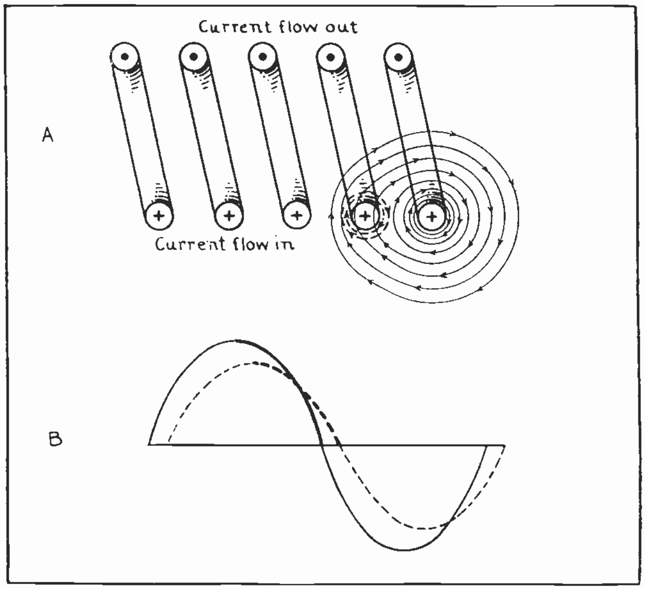

Fig. 18. This sketch shows the same coil as in Figs. 16 and 17 during a period when the current through the coils is decreasing from maximum to zero value. Note how the flux contracts and cuts across the turns of the coil.

As the voltage starts to reduce and causes the current to decrease, the lines of force around the turns of the coil will start to contract or die down as shown in Fig. 18-A. They are now cutting across the turns of the coil in the opposite direction to what they formerly were, and so they induce a voltage in the same direction as the applied voltage. This self-induced voltage now adds to, or aids, the applied voltage, which still further explains why the current flow reaches its maximum value after the voltage does.

As the voltage dies on down to zero and the current also tends to decrease to zero, the contracting lines of force keep on inducing voltage that tends to make the current continue in the same direction, even for a short instant after the applied voltage has reached zero.

Thus the current of the alternation reaches its zero value slightly later than the voltage does.

17. LAGGING CURRENT CAUSED BY INDUCTANCE

From these illustrations we can see that inductance causes the current to reach its maximum and zero values a few degrees later than the voltage, or to lag behind the voltage. Inductance, therefore, causes the current to be out of phase with the voltage. The greater the inductance of an A. C. circuit, the farther its current will lag behind the voltage.

In circuit diagrams inductance is usually represented by turns of a coil, as shown in Fig. 15.

In a circuit that has practically all inductance and very little resistance, the current would lag almost 90 degrees behind the applied voltage. If it were possible to have a circuit with all inductance and no resistance, the current lag on that circuit would then be 90°. This condition is, of course, not possible, because all circuits have some resistance.

Fig. 19 shows the curves for the applied voltage E, counter-voltage of self-induction Ec, current I, and flux F, for a circuit that we shall assume has inductance only and no resistance.

The change in current value and the corresponding flux change are much more rapid as the current passes its zero point. This can be seen by noting the various amounts of current change along the curve I, between the vertical time lines which divide the alternation into even time periods of ⅛ alternation each. You will note that the current change from "l" to "m" is much greater than in the next equal time period from "m" to "n".

This very rapid change of current and flux will cause the maximum counter-voltage to be induced at the time the current passes through its zero value. The curve Ec shows the counter-voltage at maximum during this period.

The current changes at the lowest rate when near its maximum value, or from o to p, and p to q. The correspondingly slower flux change at this point causes the induced counter-voltage to be at or near zero value during this period.

So we find that the counter-voltage of self-induction in this case lags behind the current by 90 degrees. The applied line voltage to overcome the counter-voltage is 180° out of phase with it, or in direct opposition to the counter-E. M. F.

The applied voltage therefore "leads" the current by 90°, or as we more commonly say, the current "lags" the voltage by 90°.

In actual circuits, the current would never lag this far but would be somewhere between this point and the "in phase" position, according to the amount of inductance in the circuit.

The curve E, which represents the applied voltage to overcome the voltage of self-induction, is shown 180° out of phase with the voltage of self-induction and 90° ahead of the current.

In any actual circuit the energy voltage would be a few degrees later than the voltage curve E in this figure, because there would be a little resistance to overcome.

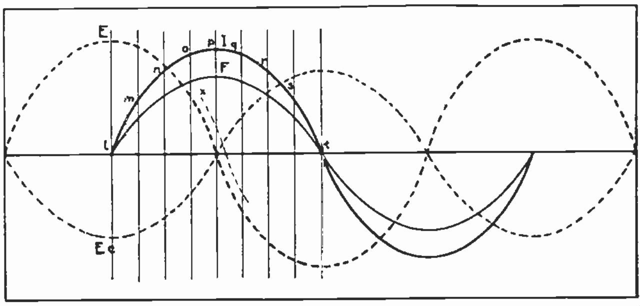

Fig. 19. Curves for a single-phase circuit in which the current and voltage are approximately 90° out of phase with each other, due to inductance in the circuit.

The applied voltage in Fig. 19 is shown at zero value when the current is at maximum, while in an actual circuit having some resistance, the energy voltage would still be a little above the zero value, as shown by the short dotted section of the curve at "X".

18. SELF-INDUCTION IN D. C. CIRCUITS

While there is practically no inductive effect or counter-voltage of self-induction in a D. C. circuit as long as the current does not vary, there is often considerable voltage of self-induction set up in windings of large D. C. machines or magnets when the circuit is first closed or opened. This effect is encountered with the rotors or fields of large alternators, as their coils are excited by D. C.

When D. C. voltage is first applied to the field winding of large machines, it may actually require several seconds or more for the current to build up to its full value and overcome the effects of self-induced counter-voltage set up by the expanding flux.

When such circuits are opened, the sudden collapse of flux around the coils may induce very high voltage, which tends to oppose the decrease of current or keep the current flowing in the same direction. This accounts for the very severe arcs drawn when some highly-inductive D. C. circuits are opened.

The choking effect or counter-voltage of self-induction in an A. C. circuit will vary directly with the frequency of the current, or the rapidity with which the flux changes and reversals are made.

This fact is taken advantage of in constructing certain devices, such as choke coils for lightning arresters, load-limiting reactors, etc. These devices will be explained later.

19. CALCULATING INDUCTANCE AND INDUCTIVE REACTANCE

The amount of inductance which any coil or device may have in henrys can be calculated by the following formula:

$$L = \frac{\text{Maximum flux} \times \text{no. of turns}}{\text{Maximum current} \times 10^8}$$

In which:

10^8 = 100,000,000, or the no. of lines of force necessary to be cut in one second to produce one volt.

When the inductance of a certain device or circuit is stated or known in henrys, the inductive reactance in ohms can be found by the following formula:

$X_L = 2\pi \times f \times L$

In which:

X_L = inductive reactance in ohms
π = 3.1416, or ratio of circumference to diameter of a circle
2π = 6.2832
f = frequency in cycles per second
L = inductance in henrys

This formula is very important, as the inductive reactance is one of the factors we need to know in order to apply the A. C. ohms law for making any A. C. circuit calculations.

As most A. C. power circuits are highly inductive due to the machine windings, as previously explained, inductive reactance is the factor most commonly encountered in ordinary A. C. work in power plants and industrial plants.

Induction motors and transformers are highly inductive devices.

20. CAPACITY

In alternating current circuits there is always a certain amount of condenser effect, or tendency to store an electro-static charge as the varying voltage of each alternation is applied. This condenser effect is known as the **capacity** of a circuit.

You will recall, from an explanation of condensers in the Elementary Section of this set, that a condenser consists of two or more surfaces or areas of conducting material, separated by an insulator or dielectric. This condition exists in an electric circuit, as the wires form the conducting areas, and their insulation, or in some cases air only, forms the dielectric between them.

You have also learned in the earlier discussion of condensers that the amount of charge in coulombs which a condenser will absorb depends on the voltage applied.

On ordinary low-voltage A. C. circuits of short length, the condenser or capacity effect is so small that it need not be considered in every day problems. On high-voltage transmission lines of great lengths, the capacity effect is often very great and must be carefully considered in several ways.

For example, such lines may store such a charge that even after they are disconnected from the power plant they may hold a charge of thousands of volts and many kilowatts. In fact, they often hold so much of a charge for a short period after the voltage source has been disconnected from them, that the wires would be very dangerous to handle until after they have been shorted together or grounded by placing a ground wire across them. This discharges the capacity charge stored in the line and makes the wires safe to handle.

21. UNIT OF CAPACITY

Capacity of electric circuits or condensers is measured and expressed by the unit, **farad. A condenser has one farad capacity when a charge of one coulomb will raise the condenser potential one volt.**

The coulomb, you will recall, is a flow of one ampere for one second. A condenser of one farad capacity will take a charge of one coulomb when one volt is applied to its terminals.

Most condensers have capacities of only a few millionths of a farad; so the unit **micro-farad,** meaning $\frac{1}{1,000,000}$ of a farad, is much more commonly used than the larger unit.

Capacity is, however, always expressed in farads or fractions of a farad when used in calculations. For example, 50 microfarads would be expressed as .000,050 farad. The symbol for farads or capacity is the large letter "C".

22. CONDENSER CHARGING CURRENT

When voltage is first applied to the terminals of a condenser, as shown in Fig. 20, a current will at once start to flow into the condenser to store up its electro-static charge. If the direction of the applied voltage and current for the instant are as shown by the arrows in Fig. 20-A, the top plate of the condenser will become positively charged and the lower plate negatively charged, as shown.

When the voltage is first applied to a condenser and before its plates have had time to build up their charge of voltage, the current flow into the condenser will be very rapid and at maximum value, even though the applied voltage is still very low. This is illustrated by the curves in Fig. 20-B. The curve E represents the applied voltage; the curve I, the current flow to the condenser; and the dotted curve Ec, the counter-voltage of the condenser. These curves are shown for a circuit that has practically all capacity and very little resistance.

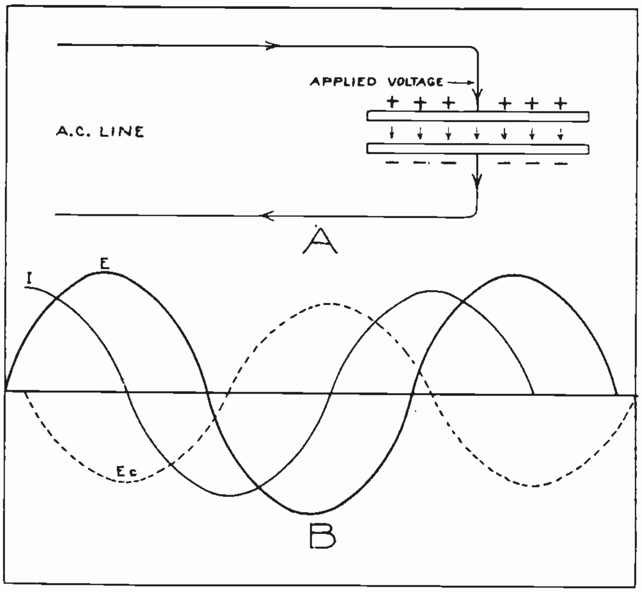

Fig. 20. This diagram shows the current leading the voltage by nearly 90°, due to capacity or condenser effect in the circuit.

You will note at the first curve on the left that the current reaches maximum value just a little later than the applied voltage starts from zero value. Then, as the applied voltage keeps on increasing, the counter-voltage, Ec, of the condenser is building up and reduces the flow of current, until it reaches zero value just after the applied voltage reaches maximum.

In this circuit, therefore, the voltage leads the current by nearly 90 degrees. If it were possible to have a circuit with all capacity and no resistance, the voltage would lead the current by 90°.

When the applied voltage passes its maximum value and starts to die down, the condenser starts to discharge, causing the current to start to flow in the reverse direction just after the applied voltage reaches maximum.

As the condenser discharges, its counter-voltage dies down as shown by the dotted curve Ec, until it reaches zero value just a few degrees later than the applied voltage does.

When the alternating voltage reverses, the current flows into the condenser in the opposite direction and charges its plates with opposite polarity.

In this manner a condenser receives its heaviest or maximum current just as the applied voltage reverses and starts to build up in a new alternation, and then the condenser discharges its current ahead of the next voltage reversal, causing the current in such a circuit to lead the voltage.

Current does not actually flow through a condenser as long as its insulation is not punctured by too high voltage, but the rapid flow of alternating current in and out of a condenser as it charges and discharges, provides a flow of current that can be measured by an ammeter or used to operate devices, just as though it actually flowed clear through the circuit.

The amount of the charging current is proportional to the size or capacity of the condenser, and is also proportional to the amount and frequency of the applied voltage.

When a condenser is connected in a high frequency circuit it will allow a much greater flow of current than when in a low frequency circuit.

Condensers in a D. C. circuit do not allow any current flow except during the first instant that the voltage is applied, and while the condenser is taking its charge. If a condenser which has been charged in this manner is short-circuited, it will discharge its energy in one violent rush of current.

23. CAPACITY REACTANCE

Capacity of an A. C. circuit causes **capacity reactance,** or **condensive reactance,** as it is often called. This condensive reactance tends to oppose the flow of current similarly to resistance and inductive reactance.

Capacity reactance tends to oppose any change in the voltage of a circuit, and causes the voltage to lag behind the current, as previously explained.

We learned that inductive reactance causes the current to lag behind the voltage; so we find that in this respect capacity reactance is opposite to inductive reactance.

Lagging voltage can also be expressed as "leading current", as both terms express the same condition in the circuit. In describing the phase relations of the voltage and current, we usually say "lagging current" or "leading current"; and seldom refer to lagging voltage.

When the capacity of any circuit is known in farads, the capacity reactance in ohms can be determined by the following formula:

$$X_c = \frac{1}{2\pi \times f \times C}$$

In which:

X_c = capacity reactance in ohms
f = frequency in cycles per sec.
C = capacity in farads
$2\pi = 6.2832$

This formula is very important, as we want to be able to convert the apparent resistance effect of capacity into ohms capacity reactance, in order to apply Ohms law to any A. C. circuit problems.

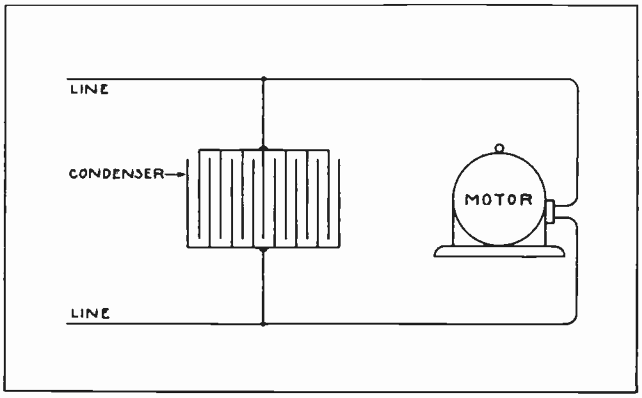

Fig. 21. A condenser connected in parallel with a motor will cause lagging voltage or leading current, and will neutralize effects of induction produced by the motor.

Capacity effect or condensers are usually shown in circuit diagrams by a symbol such as is used in Fig. 21. This symbol represents the plates of a condenser, the two groups of which are connected to the two wires of the circuit. In an actual condenser the insulation between the plates may be any convenient form of dielectric, such as fibre, glass, rubber, paper, or oil. In the case of A. C. circuits and lines, this insulation which forms the dielectric for the condenser effect may be the insulation on the wires or, as in the case of transmission lines, merely the air between the wires.

As capacity reactance is opposite in effect to inductive reactance, special condensers are often connected in A. C. circuits in industrial plants, to neutralize the effects of inductance and lagging current. The advantages of this will be explained later.

In Fig. 21 the condenser is connected in parallel with a motor. When the voltage of any alternation starts to build up on this circuit, the condenser takes a charge and its voltage opposes the building up of the applied energy voltage, thus causing it to lag.

When the energy voltage reaches maximum, the condenser will be fully charged and, as the energy voltage starts to decrease, the condenser voltage will then be applied to the circuit and will tend to oppose the dying down of the energy voltage, or will maintain it longer. This retards the dying down of the energy voltage and causes it to reach its zero value an instant later. After the energy voltage reaches zero the condenser will still be discharging or applying a little voltage to the circuit.

Thus we have another illustration of the manner in which a condenser causes the lagging voltage, or leading current as it is more frequently expressed.

The effects of capacity are very useful and valuable in many circuits.

Static condensers are often used on highly-inductive power circuits to improve the power factor by neutralizing the effect of excessive inductance.

Condensers are also used extensively in radio and telephone work to pass currents of certain frequencies and stop those of lower frequency or D. C. in various circuits.

24. SUMMARY OF INDUCTANCE AND CAPACITY

Some of the most important points to remember about inductance and are summed up briefly in the following:

Inductive equipment in A. C. circuits consists of coils, windings of transformers, motors, generators, choke coils of lightning arresters, current-limiting reactors, etc.

Capacity effects in A. C. circuits are produced by static condensers, over-excited synchronous motors, long transmission lines or underground cables, etc.

(a) Inductance opposes current changes
Capacity opposes voltage changes

(b) Inductance causes lagging current
Capacity causes leading current

(c) The effect of inductance is opposite to that of capacity, or their effects are 180° apart and tend to neutralize each other

(d) Excessive inductance is detrimental to the power-carrying capacity of a circuit
Excessive capacity is detrimental to the power-carrying capacity of a circuit

(e) Inductance may be used to neutralize the effect of excessive capacity
Capacity may be used to neutralize the effect of excessive inductance

(f) Inductance causes low power-factor, "lagging"
Capacity causes low power-factor, "leading"

(g) Lagging power-factor may be compensated for by static condensers or over-excited synchronous motors.

25. SERIES A. C. CIRCUITS

There are four classes of series circuits commonly encountered in alternating current work. These are as follows:

(a) Circuits with resistance only
(b) Circuits with resistance and inductive reactance
(c) Circuits with resistance and capacity reactance
(d) Circuits with resistance, inductive reactance, and capacity reactance.

Incandescent lighting circuits and those supplying similar non-inductive equipment are considered to have resistance only. Actually these circuits have a slight amount of inductance and capacity, but it is so small that it is negligible.

Circuits of this type can be treated similarly to D. C. circuits, because the resistance is the only opposing force to the current and therefore the resistance equals the total impedance. To determine the current flow in such circuits it is only necessary to divide the applied voltage by the resistance or impedance in ohms.

The most common types of circuits encountered in alternating current power work are those which have resistance and inductive reactance. The method of determining the impedance and currents of such circuits will be covered in the following paragraphs.

26. CALCULATION OF IMPEDANCE IN SERIES A. C. CIRCUITS

Fig. 22-A shows a resistance and an inductance connected in series. The resistance of 8 ohms is represented by the usual symbol, with which you are already familiar, and the inductive reactance of 6 ohms is represented by the coil symbol which is commonly used for showing inductance in circuits.

At first thought, it might seem that we can merely add the ohms resistance and ohms inductive reactance to get the total impedance in the circuit; because this was a method used in D. C. circuits with two or more resistances in series. This method cannot be used with resistance and inductive reactance, however, because their effects on the current are out of phase with each other.

If this circuit had only resistance, the current which would flow when alternating voltage is ap-

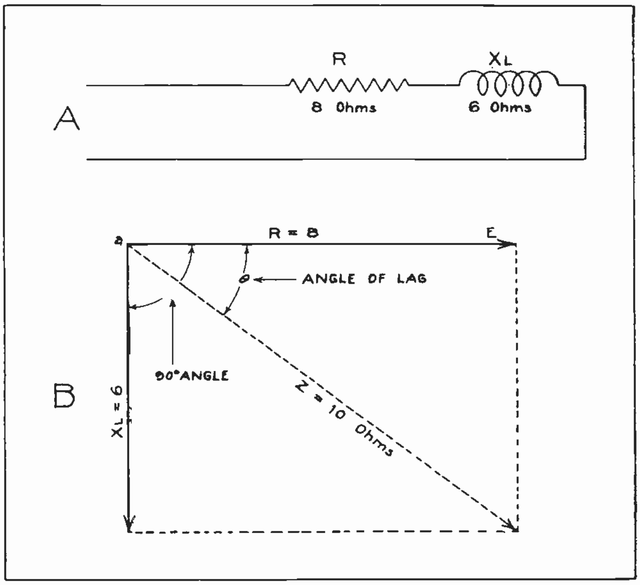

Fig. 22. "A". A resistance coil connected in series with an inductance coil in an A. C. circuit. "B". This sketch shows the method of determining the amount of impedance of the circuit shown at "A".

plied would be in phase with the voltage. If the circuit had only inductance, the current which would then flow would be 90° out of phase with the voltage, or lagging 90° behind it.

27. GRAPHIC SOLUTION FOR RESISTANCE AND INDUCTIVE REACTANCE IN SERIES

As the inductive reactance and resistance both tend to affect the flow of current and its phase position with respect to the voltage, we can determine these effects by the use of a diagram such as shown in Fig. 22-B. Here we have a horizontal line used to represent the 8 ohms resistance; and a vertical line at an angle of 90° with the horizontal line, to represent the 6 ohms inductive reactance.

These two lines can be drawn to scale, so that the length of each will represent the proper value in ohms. In diagrams of this type the lines are all considered to be revolving, like the spokes of a wheel, in a counter-clockwise direction around the point where they join at "a".

Keep this fact well in mind whenever examining or working with such diagrams.

If these lines are revolving counter-clockwise, then the shorter line representing the inductive reactance X_L will be 90° behind the long line, which represents the resistance, "R".

As the current which would flow in a circuit with only resistance would be in phase with the applied voltage, the horizontal line "R" can also be allowed to represent the current in phase with the voltage.

If we now draw dotted lines as shown to complete the rectangle we will have what is known as a **parallelogram** of forces, and the length of the diagonal line "Z" will indicate the total amount of impedance, and its position with respect to the line "R" will indicate the angle of lag of the current behind the applied voltage.

If the lines representing the resistance and inductive reactance are carefully drawn to scale and at the proper angle, then by measuring the length of the line "Z" we will get the value of the impedance in ohms, according to the same scale length used per ohm on the other lines. A scale of ¼" per ohm is used for the lines in Fig. 22.

This graphic method provides an exceedingly simple way of solving such problems. It would not, of course, be very accurate on large values or figures, because it would be difficult to make the lines long enough or to measure them with sufficient accuracy. This diagram will, however, show the manner in which the amount of current lag in degrees is determined by the proportion of resistance and inductive reactance in the circuit.

By examining the diagram in Fig. 22-B, or by drawing another like it with a longer line to represent a greater amount of inductive reactance, you can readily see that this would swing the diagonal line "Z" farther downward, or would cause a greater angle of lag between the current and voltage.

On the other hand, if we were to increase the amount of resistance and lengthen the line "R", this would swing the line "Z" up and nearer to the resistance line, and bring the resulting current nearer in phase with the voltage.

28. FORMULA FOR IMPEDANCE OF RESISTANCE AND INDUCTIVE REACTANCE IN SERIES

The impedance of such a circuit, with resistance and inductive reactance in series, can be calculated accurately by the following formula:

$$Z = \sqrt{R^2 + X_L^2}$$

We can obtain the impedance in ohms by squaring the resistance and inductive reactance in ohms, adding these squares together, and then extracting the square root of the sum, as shown by this formula.

In the case of the circuit shown in Fig. 22, where we have 8 ohms resistance and 6 ohms inductive reactance, our problem would be:

$$Z = \sqrt{8^2 + 6^2}, \text{ or}$$
$$Z = \sqrt{64 + 36}, \text{ or}$$
$$Z = \sqrt{100}, \text{ or 10 ohms impedance}$$

This illustrates the various steps in solving such a problem with the exception of the details of finding the square root. The process of extracting the square root of a number is explained in a later section on mathematics. If you require it you can also obtain assistance on this process from your instructor.

It will be a very good plan to practice a few square root problems until you can handle these problems easily, because there are numerous opportunities in alternating current electric problems to use square root to excellent advantage.

On the great majority of ordinary electrical jobs it will not be necessary to use such problems; but, if you desire to work up to higher positions, you will want to be able to work out the problems pertaining to the various circuits and machines you may be operating.

29. RESISTANCE AND CAPACITY IN SERIES

Fig. 23-A shows a circuit in which a resistance and capacity are connected in series. The resistance of 4 ohms is represented by the usual symbol and the capacity reactance of 3 ohms is represented by the symbol for a condenser.

For the graphic solution of this problem we will again draw a horizontal line of proper length to represent the 4 ohms resistance, and a vertical line to represent the 3 ohms capacity reactance. This time, however, we will draw the vertical line 90° ahead of the horizontal line which represents the resistance. The line is drawn in this position because we know that capacity reactance tends to make the current lead the voltage.

If the circuit were all capacity and no resistance, this lead would be 90°; but, as there are both re-

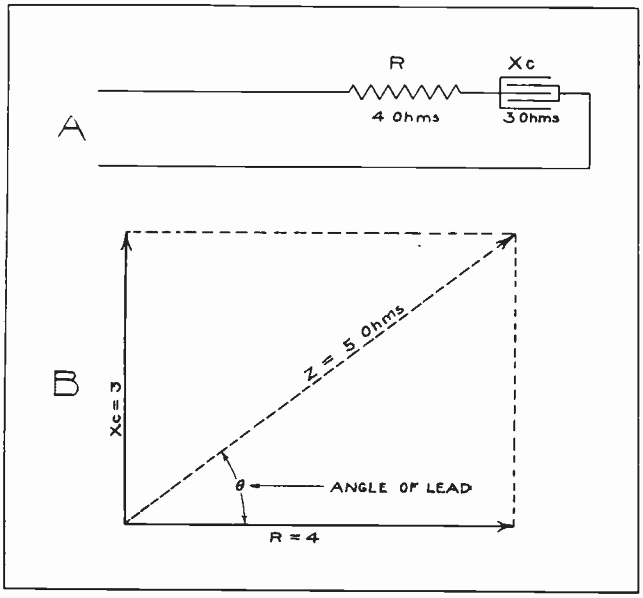

Fig. 23. "A". This circuit has a resistance connected in series with a condenser. "B". The vector diagram shows the method of determining the impedance and angle of lead between the current and voltage for a circuit such as shown at "A".

sistance and capacity, we make the lines of proper length and space them 90° from each other, to determine what the angle of lead of the circuit will be.

By again completing the parallelogram with dotted lines and drawing the diagonal line through it cornerwise, this line "Z" will represent the total impedance and will also show the phase position or angle of lead of the current. The lines in this figure are drawn to scale, using ½-inch per ohm, and you will find by measuring the line "Z" that it shows the total impedance to be 5 ohms.

This, of course, is not the sum of the two values 4 and 3, which would be obtained if they were added by arithmetic, but it is the correct vectorial sum of the two values when they are out of phase 90° as shown.

The impedance of the circuit shown in Fig. 23 can be calculated by the use of a formula very similar to that used for the circuit in Fig. 22. The formula is as follows:

$$Z = \sqrt{R^2 + Xc^2}, \text{ or, in this case}$$

$$Z = \sqrt{4^2 + 3^2}, \text{ or}$$

$$Z = \sqrt{16 + 9}, \text{ or}$$

$$Z = \sqrt{25}, \text{ which gives 5 ohms impedance}$$

30. RESISTANCE, CAPACITY, AND INDUCTANCE IN SERIES

Fig. 24-A shows a circuit in which we have resistance, inductance, and capacity all in series.

In Fig. 24-B, all three of these values are represented by the solid lines, R, Xc, and X_L. In this case we have again drawn a horizontal line to represent the resistance. The line X_L, representing inductive reactance, is drawn 90° behind the resistance line; and the line Xc, representing capacity reactance is drawn 90° ahead of the resistance line.

We know that inductive reactance and capacity reactance have opposite effects in the circuit and will therefore tend to neutralize each other. As the inductive reactance is the greater in this case, our first step will be to subtract the 10 ohms capacity reactance from the 22 ohms of inductive reactance.

This neutralizes or eliminates the 10 ohms capacity reactance and 10 ohms of the inductive reactance shown on the line from "l" to "m". The remaining 12 ohms of inductive reactance which are not neutralized by the capacity effect, and the resistance, will be the factors which determine the total impedance and the phase angle of the current.

Once more drawing our parallelogram with the remaining factors or values, we find that the current still lags behind the applied voltage and that the total impedance is 20 ohms. The scale to which the lines are drawn in this case is $\frac{1}{16}$ of an inch per ohm.

The total impedance of a circuit such as shown in Fig. 24-A can be more accurately calculated by means of the formula:

$$Z = \sqrt{R^2 + (X_L - Xc)^2}$$

In this case $X_L - Xc$ is $22 - 10$, or 12.

Then, $12^2 = 144$.

The next step indicated by the formula is to square the resistance. This will be 16×16, or 256.

Then, $256 + 144 = 400$.

And the final solution of the problem will be:

$$Z = \sqrt{400}, \text{ or 20 ohms.}$$

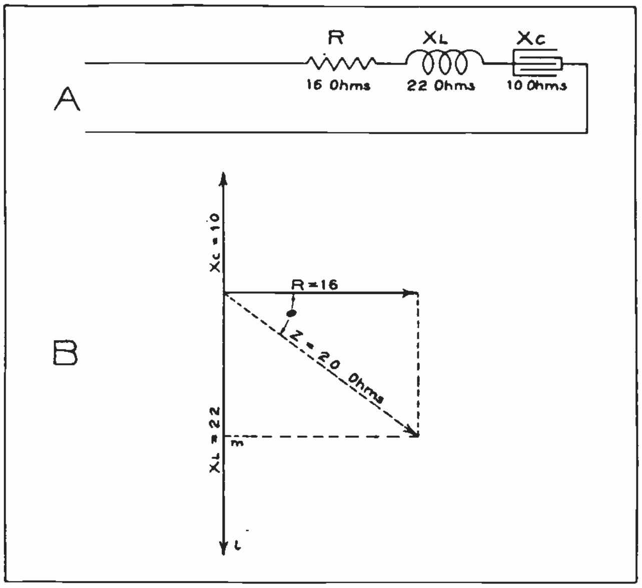

Fig. 24. "A". Resistance, inductance, and capacity connected in series in an A. C. circuit. "B". Note how the capacity reactance is subtracted from the inductive reactance, as the two neutralize each other in the circuit.

31. PARALLEL A. C. CIRCUITS

Parallel alternating current circuits are of the same four general types as series circuits. That is, they may contain resistance only, resistance and inductance in parallel, resistance and capacity in parallel, or resistance, inductance, and capacity in parallel.

To determine the impedance of parallel A. C. circuits we must use the reciprocal method, somewhat similar to that which was explained for parallel resistances in D. C. circuits.

You will recall that with D. C. circuits when the resistances were in series we added the resistance in ohms of all the circuits to obtain the total resistance. But when resistances were in parallel we first added the conductances or reciprocals of the resistance to obtain the total conductance, and then inverted this or obtained its reciprocal, which is the total resistance.

This is the same general method used in determining the total impedance of parallel A. C. circuits.

The opposite of impedance in A. C. circuits is the **admittance.** Admittance in this case means the same as conductance in D. C. circuits. Admittance is, therefore, always the reciprocal of the impedance and is expressed in **mhos**, the same as conductance for D. C. circuits.

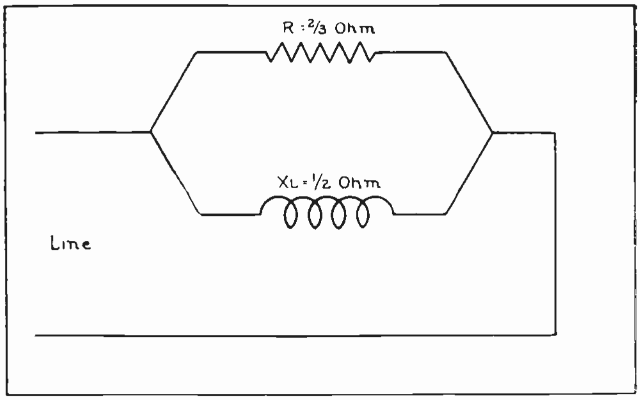

Fig. 25. Resistance and inductance in parallel. The impedance for this circuit can be determined by the formulas given on this page.

32. RESISTANCE AND INDUCTANCE IN PARALLEL

Fig. 25 shows a resistance of ⅔ ohm connected in parallel with an inductive reactance of ½ ohm. The total impedance of this circuit can be determined by the following formula:

$$Z = \frac{1}{\sqrt{\left(\frac{1}{R}\right)^2 + \left(\frac{1}{X_L}\right)^2}}$$

According to this formula we must first obtain the separate reciprocals of the resistance and inductance by dividing the number 1 by each of these values in ohms. These reciprocals are then squared and added together and the square root of their sum next obtained. The final step is to obtain the reciprocal of this square root by dividing the number 1 by it, as shown by the formula.

Using with the formula the values given in Fig. 25, the problem becomes:

$$Z = \frac{1}{\sqrt{\left(\frac{1}{\frac{2}{3}}\right)^2 + \left(\frac{1}{\frac{1}{2}}\right)^2}}$$

Here we have substituted the $\frac{2}{3}$ ohm resistance for the "R" shown in the formula, and the $\frac{1}{2}$ ohm inductive reactance for the X_L shown in the formula.

We next divide the number one by each of these values, to obtain their reciprocals, and our problem then becomes:

$$Z = \frac{1}{\sqrt{\frac{3^2}{2} + 2^2}}$$

Then by squaring these reciprocals as indicated by the formula, the problem becomes:

$$Z = \frac{1}{\sqrt{\frac{9}{4} + 4}}$$

Before we can add $\frac{9}{4}$ and 4, they must both be converted to like fractions, or:

$$Z = \frac{1}{\sqrt{\frac{9}{4} + \frac{16}{4}}} \text{ or } \frac{1}{\sqrt{\frac{25}{4}}}$$

Then obtaining the square root of $\frac{25}{4}$, our problem is reduced to $\frac{1}{\frac{5}{2}}$.

We then divide 1 by $\frac{5}{2}$ to get the reciprocal, which equals $\frac{2}{5}$ ohms, total impedance.

33. RESISTANCE AND CAPACITY IN PARALLEL

Fig. 26 shows a circuit with a resistance of $\frac{1}{4}$ ohm and a capacity reactance of $\frac{1}{3}$ ohm, connected in parallel. The total impedance of this circuit can be determined by a formula similar to the one just used, or as follows:

$$Z = \frac{1}{\sqrt{\left(\frac{1}{R}\right)^2 + \left(\frac{1}{X_C}\right)^2}}$$

Substituting the values given for the circuit, the problem becomes:

$$Z = \frac{1}{\sqrt{\left(\frac{1}{\frac{1}{4}}\right)^2 + \left(\frac{1}{\frac{1}{3}}\right)^2}}$$

When we divide the figure 1, in each case, by the resistance and reactance to get their reciprocals, we then have:

$$Z = \frac{1}{\sqrt{4^2 + 3^2}} \text{ or, } \frac{1}{\sqrt{16 + 9}}$$

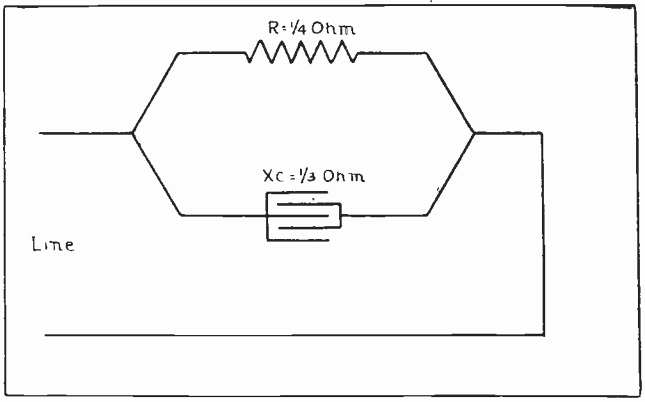

Fig. 26. Resistance and capacity in parallel in an A. C. circuit. Practice using the formulas given on these pages for determining the impedance of such circuits.

As 16 + 9 = 25, the problem now remains:

$$Z = \frac{1}{\sqrt{25}}$$

The square root of 25 = 5, so this reduces the problem to:

$$Z = \tfrac{1}{5}, \text{ or } \tfrac{1}{5} \text{ ohm impedance}$$

34. RESISTANCE, INDUCTANCE, and CAPACITY IN PARALLEL

Fig. *27* shows a circuit with inductance, resistance, and capacity in parallel.

The total impedance of this circuit can be found by the formula:

$$Z = \frac{1}{\sqrt{\left(\frac{1}{R}\right)^2 + \left(\frac{1}{Xc} - \frac{1}{X_L}\right)^2}}$$

Note the similarity between this formula and the one which was used for impedance of series circuits having inductance, resistance, and capacity. The principal difference is merely that with parallel circuits we use the reciprocals of the values, instead of the values in ohms themselves.

You will also note that with parallel circuit problems we subtract the reciprocal of the inductive reactance from the reciprocal of the capacity reactance, as one of these effects tends to neutralize the other, as they did in series circuits.

In the circuit shown in Fig. *27* the inductive reactance in ohms is larger than the capacity reactance, but when the reciprocals of these values are obtained their relative sizes will be reversed, as shown by their subtraction in the formula.

In a circuit where the capacity reactance might be the greatest, we would reverse the order of subtraction, in order to subtract whichever reciprocal is smallest from the one that is largest.

Substituting the values from the circuit in Fig. *27*, for the symbols given in the formula, the problem of determining the total impedance becomes:

$$Z = \frac{1}{\sqrt{\left(\frac{1}{1\frac{1}{3}}\right)^2 + \left(\frac{1}{\frac{3}{5}} - \frac{1}{1\frac{1}{2}}\right)^2}}$$

Our first step will be to convert the whole numbers and fractions, to fractions, as follows;

$$1\frac{1}{3} = \frac{4}{3}, \text{ and } 1\tfrac{1}{2} = \frac{3}{2}.$$

$$\text{Then } Z = \frac{1}{\sqrt{\left(\frac{1}{\frac{4}{3}}\right)^2 + \left(\frac{1}{\frac{3}{5}} - \frac{1}{\frac{3}{2}}\right)^2}}$$

Then by dividing 1 by each of the fractions to obtain their reciprocals we have:

$$Z = \frac{1}{\sqrt{\frac{3^2}{4} + \left(\frac{5}{3} - \frac{2}{3}\right)^2}}$$

Next subtracting $\frac{2}{3}$ from $\frac{5}{3}$ as shown in the latter part of the formula, we have:

$$Z = \frac{1}{\sqrt{\frac{3^2}{4} + \frac{3^2}{3}}} \text{ or } Z = \frac{1}{\sqrt{\frac{3^2}{4} + 1^2}}$$

Then $\frac{3}{4}$ squared equals $\frac{9}{16}$, and 1 squared equals 1, So, $Z = \frac{1}{\sqrt{\frac{9}{16} + 1,}}$ or $Z = \frac{1}{\sqrt{\frac{25}{16}}}$

Obtaining the square root of $\frac{25}{16}$ gives $\frac{5}{4}$,

$$\text{So, } Z = \frac{1}{\frac{5}{4}}, \text{ or } \tfrac{4}{5} \text{ ohm impedance}$$

Once more let us remind you that on your first electrical jobs you may not have much use for problems or formulas such as the foregoing. But as you may wish to be able to calculate the impedance of A. C. circuits at some future date, these problems have been worked out step by step in these pages to provide a guide or reference for you, in case you need them in the future.

Working them out carefully and also applying these formulas to other similar circuit problems will be very good practice, and will also help you to more clearly understand certain points about impedance, admittance, and reactance in A. C. circuits.

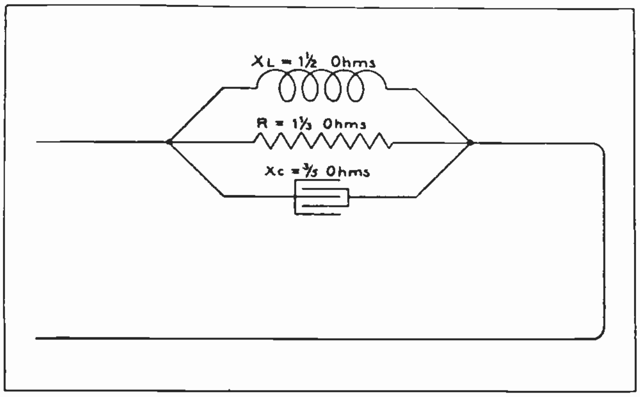

Fig. 27. This sketch shows inductance, resistance, and capacity connected in parallel. The method of determining the impedance of such a circuit is thoroughly explained on this page.

35. CURRENT IN PARALLEL CIRCUITS

The total line current or resultant current as it is called, and also the amount of lag or lead of the current in parallel A. C. circuits, can be worked out by the use of vector diagrams such as those shown in Figs. 22, 23, and 24 for series circuits.

When using vector diagrams for parallel circuits, the lines can be allowed to represent the currents through the resistance, inductance, and capacity branches of the circuit.

The current through the separate branches of the circuit, or the devices which contain the resistance, inductance, and capacity, can be determined by the use of an A. C. ammeter, or by the use of Ohms law formulas for each branch, as follows:

$$I = \frac{E}{R},\ I = \frac{E}{X_L},\ I = \frac{E}{X_C},\ \text{etc.}$$

For example, in Fig. 28 is shown a circuit with resistance, inductance, and capacity in parallel. We can assume that these are a heater resistance, a transformer winding, and a condenser all operated from the same 40-volt line. Separate tests made with an ammeter in the circuit of each device show 8 amperes flowing through the resistance or heater, 4 amperes through the inductance or transformer coil, and 2 amperes through the condenser.

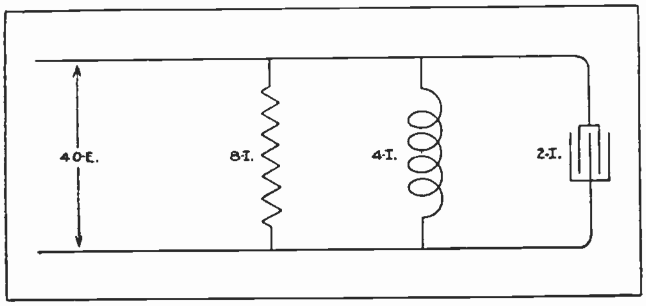

Fig. 28. Note the amount of current in each of the branches of the above circuit and compare this sketch with Fig. 29, while determining the total current in the circuit.

By use of Ohms law formulas, we can determine the resistance and reactance in ohms of each of these devices as follows:

$$R = \frac{E}{I} \text{ or } R = \frac{40}{8}, \text{ or 5 ohms}$$

$$X_L = \frac{E}{I} \text{ or } X_L = \frac{40}{4}, \text{ or 10 ohms}$$

$$X_C = \frac{E}{I} \text{ or } X_C = \frac{40}{2}, \text{ or 20 ohms}$$

We can represent the currents of this circuit by the vector diagram shown in Fig. 29.

The solid horizontal line represents the current through the resistance; and as this current will be in phase with the line voltage, this same line can represent the phase position of the voltage.

The vertical line, which is 90° behind the horizontal current and voltage line, represents the current through the inductance.

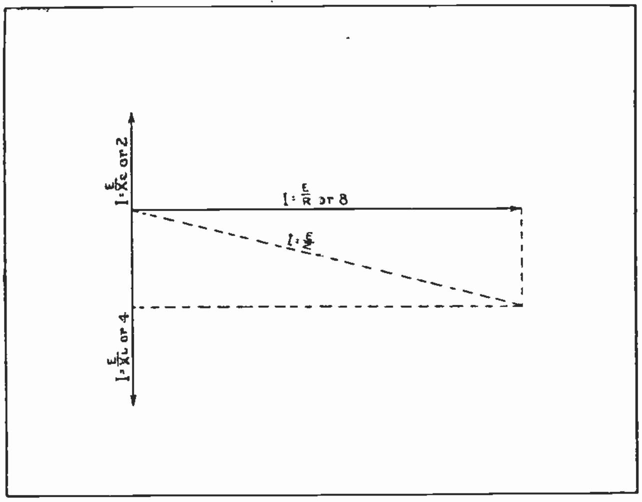

Fig. 29. This diagram illustrates the method of determining the current in parallel A. C. circuits which have all three factors; resistance, inductance, and capacity.

The shortest vertical line, which is 90° ahead of the horizontal line, represents the current through the condenser.

Now if we subtract the leading current from the lagging current, and draw dotted lines to form the parallelogram with the remaining lagging current and the current which is in phase with the voltage, the diagonal line, $I = \frac{E}{Z}$, through this parallelogram will represent the total line current.

It may seem peculiar that the total line current or vectorial sum of the three currents is only slightly more than the current through the resistance. This is due to the fact that the leading and lagging currents, which are balanced, tend to neutralize each other, or actually circulate between the condenser and inductance in Fig. 28, and do not flow on the line wires from the generator. This interesting fact will be further discussed later in a section on power factor.

36. POWER FACTOR

We have learned so far in our study of alternating current and A. C. circuits, that inductive reactance and capacity reactance often cause the current in these circuits to be out of phase with the voltage.

We have also found that this reduces the amount of effective or true power in watts and causes a certain amount of wattless energy. This was illustrated by the voltage, current, and power curves shown in Fig. 13.

In a D. C. circuit the power in watts can always be obtained by multiplying the volts by the amperes. It can also be obtained with a wattmeter. When the current and voltage of an A. C. circuit are in phase with each other the power can be determined by the same method as used for D. C. circuits. That is, by obtaining the product of the volts and amperes.

37. TRUE POWER AND APPARENT POWER

When the voltage and current of an A. C. circuit are out of phase their product will not give the **true power** in the circuit, but instead gives us what we call **apparent power.** The apparent power of A. C. circuits is commonly expressed in **kilovolt amperes,** abbreviated kv-a.

Alternators, transformers, and certain other A. C. machines are commonly rated in kv-a. When an A. C. wattmeter is connected in a circuit which has lagging or leading current it will read the **true power** and not the apparent power. This is due to the fact that the coils which operate the pointer in the meter depend upon true or effective power for their torque which moves the pointer against the action of the spring.

It is very important to remember that you can always obtain the true power of an A. C. circuit by means of a wattmeter. The product of voltmeter and ammeter readings in the circuit will give the apparent power, and this figure will usually be more than the true power, because the current in most A. C. circuits lags somewhat behind the voltage.

Keep in mind that true power is expressed in watts and kilowatts and apparent power in volt-amperes or kilovolt-amperes.

38. POWER FACTOR DEFINITION AND FORMULA

The ratio between the apparent power and true power in any circuit is known as the power factor of that circuit. This power factor is expressed in percentage and can always be found by dividing the true power by the apparent power, or this can be expressed as a formula in the following manner:

$$\frac{\text{True power}}{\text{Apparent power}} = \text{Power Factor}$$

The practical man, doing electrical maintenance work or power plant operating in the field, is likely to have many occasions to use this formula and method of determining the power factor of various machines or circuits with which he is dealing. Therefore, it is well to keep in mind that you can always determine the apparent power of a circuit or machine by means of a voltmeter and ammeter and obtaining the product of their readings; then obtain the true power by means of a wattmeter, and finally determine the power factor by means of the formula just stated.

If the apparent power in kv-a. is known for any circuit or machine, and the power factor of that circuit or machine is also known, then the true power can be determined by the following formula:

$$\text{App. power} \times \text{P. F.} = \text{true power}$$

As many A. C. machines are rated in kv-a. and have their power factor stated on the name-plate, this formula will often be very handy for determining the amount of true power the machine will supply.

In case the true power and the power factor of a circuit are known, the apparent power can be determined without the aid of meters by the following formula:

$$\frac{\text{true power}}{\text{P. F.}} = \text{apparent power}$$

The greater the angle of phase difference between the current and voltage in an A. C. circuit, the less true power will be obtained and the lower will be the power factor. Therefore we find that power factor will always depend upon the amount of lag or lead of the current.

39. LAGGING OR LEADING CURRENT

Tests show that the power factor is mathematically equal to what is called the **cosine** of the angle of lag or lead between the voltage and current. When the voltage and current are exactly in phase this angle is zero, and its cosine and the power factor will both be 100%.

This condition is often called **unity power factor.** As the voltage and current get out of step or out of phase, the power factor starts to drop below 100%, and the greater the angle of phase difference becomes the lower the power factor will drop.

When the angle of phase difference is 90° either lagging or leading, the power factor will be zero, and, regardless of the amount of voltage or the amount of current flowing, there will be no true power developed.

A lag or lead of 90° is not encountered in electrical circuits, because there is always a certain amount of resistance, and no circuit is entirely made up of inductance or capacity.

The term "angle of phase difference" which will be used considerably from now on is represented by the symbol θ or $\emptyset$.

40. CAUSES OF LOW POWER FACTOR

As previously mentioned, the majority of A. C. circuits possess considerable inductance. Therefore, we usually find lagging current on most power circuits in the field.

Lightly loaded A. C. power equipment, such as motors, alternators, and transformers have much lower power factor than fully loaded machines. For this reason idle or lightly loaded A. C. machines should be avoided as much as possible, and all such equipment kept operating as nearly at full load as possible.

A great number of factories and industrial plants, using large amounts of A. C. equipment, fail to realize the importance of power factor and of having machines of the proper size and type so that they can be kept operating fully loaded. This results in low power factor on their circuits, and in the overheating of conductors and machines by the excessive currents set up by wattless power. This condition provides a splendid field of opportunity for the trained electrical maintenance man who has a knowledge of power factor, and the ability to measure the power required for various loads and select suitable motors and other equipment to handle these loads in the most efficient manner.

In many cases hundreds of dollars per month can be saved on power bills, machines and circuits relieved of current overloads, and frequent damage to windings prevented, by simply correcting the power factor in the plant. A great many untrained electrical men have little or no real conception of this subject and its importance. So you will find it very well worthwhile to carefully study and obtain a good understanding of these principles, and of the methods for correcting power factor, which will be covered later.

41. EXAMPLES OF LOW POWER FACTOR

The following problems, which are very typical of conditions often encountered in the field, should help you to more fully understand and appreciate this material given on power factor.

Let us suppose that on a certain job you have measured a circuit with a voltmeter and ammeter, and found 30 amperes flowing at 220 volts. Multiplying these two figures gives us 6600 watts of apparent power. A wattmeter connected in this same circuit shows a reading of only 3960 watts true power, which indicates that the power factor is rather low.

By the use of the formula:

$$\frac{\text{true power}}{\text{app. power}} = \text{power factor}$$

which, when applied in this case would be $\frac{3960}{6600}$ = .60 P.F., it is easy to see that a great deal of the current which is flowing in this circuit is not producing effective power.

If the company in whose plant this condition exists is generating its own power, the generators may be overloaded and overheated by wattless current, which doesn't produce power at the motors or equipment.

In case the power is being purchased from some generating company, we should keep in mind that these concerns very often give lower power rates if the consumer's power factor is kept up to a certain value. In other cases the customer may be charged a penalty rate for having low power factor.

Therefore it is often good economy to change the motors which are causing the low power factor, or to install power factor corrective equipment, such as synchronous motors or static condensers.

These devices provide condenser or capacity effects which neutralize the effects of induction motors and transformers, and thereby prevent excessive lagging current on the line and generators.

A. C. machines are commonly rated in kv-a., or kilovolt amperes, because the heating effect in their windings is proportional to the square of the current in amperes which these windings are caused to carry.

If these machines were rated in kw. and the power factor was exceedingly low, they might be forced to carry more current than their windings could stand, in an attempt to produce the proper amount of true power in kw.

This is exactly what happens in a number of cases in various plants, where there are no trained electricians who understand or appreciate the importance of power factor, and the necessity for measuring the current in amperes as well as the watts or kw. shown by the wattmeters.

Suppose that in another case there is a transformer in the plant where you are employed, and this transformer is rated at 10 kv-a. and connected to a 500-volt line. A wattmeter in the circuit of the transformer shows the load to be only 9 kw., but the transformer continually operates at a rather high temperature, as though its windings might be overloaded.

An ammeter could be used to determine the current flow, but in this case let us assume that the test is made by a portable power factor indicator, and that it shows the power factor to be 75%.

If we check up on these figures with the formula previously given for apparent power, it will soon show why the transformer is operating above normal temperature.

In the first place a 10 kv-a. transformer designed to operate on 440 volts would have a current capacity of about 22.7 amperes. This could be proven in the following manner.

10 kv-a. is equal to 10,000 volt-amperes or apparent watts.

Then, according to the formula $\frac{W}{E} = I$, from Watts law, we find that in this case there would be:

$$\frac{10{,}000}{440} \text{ or } 22.7 + \text{amperes,}$$

full load current for the transformer.

The actual load on the transformer we have found is 9 kw. at 75% P.F. 9 kw. ÷ .75 = 12 kv-a. apparent power.

Then, as 12 kv-a. is equal to 12,000 apparent watts, the current for this load can be determined as follows:

$$\frac{W}{E} = I, \text{ or } \frac{12{,}000}{440} = 27.3 \text{ amperes.}$$

This shows that the transformer is carrying 5.6 amperes more than its full rated load, or is about 20% overloaded. This is not an excessive overload and would probably not cause any damage if the transformer is well ventilated and the load not left on too long.

This 10 kv-a. transformer would be fully loaded under each of the several following conditions.

10 kw. output at 100% P.F.
9 kw. output at 90% P.F.
8 kw. output at 80% P.F.
7 kw. output at 70% P.F., etc.

42. POWER IN SINGLE-PHASE CIRCUITS

Thus far we have only mentioned power in single-phase circuits.

With balanced polyphase circuits the power of the system will be the product of the power in one phase multiplied by the number of phases.

If the power is considerably unbalanced in the several phases, it should be calculated separately for each phase, and the power of the separate phases is then added together to get the total power on the system.

The apparent power in a single-phase circuit is determined by the usual Watts Law formula:

$$\text{App. W} = \text{E} \times \text{I}$$

The true power in kw. for a single-phase circuit is found by the formula:

$$\text{True W} = \text{E} \times \text{I} \times \text{P. F.}$$

When the apparent power, or kv-a., and the voltage of a single-phase circuit are known, the current can be determined as follows:

$$\frac{\text{App. W}}{\text{E}} = \text{I}$$

43. POWER IN TWO-PHASE CIRCUITS

In balanced two-phase circuits, the power is calculated the same as for two single-phase circuits, that is, by the formulas:

$$\text{App. W} = 2 \times \text{E} \times \text{I}$$
$$\text{True W} = 2 \times \text{E} \times \text{I} \times \text{P. F.}$$

To determine the current in either phase of a balanced two-phase circuit when the voltage and total kv-a. are known, use the formula:

$$\frac{\text{App. W}}{2 \times \text{E}}$$

Two-phase power is used very little at present, but you may occasionally encounter some older installations of this type which are still in use.

44. POWER IN THREE-PHASE CIRCUITS

The power of balanced three-phase circuits can be determined by the formulas:

$$\text{App. W} = \text{E} \times \text{I} \times 1.732$$
$$\text{True W} = \text{E} \times \text{I} \times 1.732 \times \text{P. F.}$$

These formulas will apply to any balanced three-phase circuit, whether it is connected star or delta.

The constant 1.732 is used in three-phase formulas because the power of one phase of a three-phase circuit is always:

$$\frac{\text{E} \times \text{I}}{1.732} = \text{App. W.}$$

This is due to the fact that in delta-connected systems the line current is always 1.732 times the phase-winding current of any device on the system; and in star-connected systems the line voltage is always 1.732 times the phase-winding voltage.

Therefore, part of the current in any phase wire of a three-phase, delta circuit is not effective in producing power in that phase, but is used in the other phases; and part of the voltage of any phase of a three-phase, star system is effective in producing power in the other phases.

So the apparent power in any one phase will always be:

$$\frac{\text{E} \times \text{I}}{1.732}$$

To obtain the power for all these phases we would then use the formula:

$$\frac{3 \times \text{E} \times \text{I}}{1.732} = \text{total 3-ph. app. W.}$$

However, as 1.732 is also the square root of 3, it is not necessary to multiply the single-phase power by 3 and then divide by 1.732, as the same result is obtained if we simply multiply the single-phase power by 1.732, as shown in the first two formulas given for three-phase power.

These two formulas are well worth memorizing, as you will have frequent use for them in any work with three-phase power circuits or machines, and you can always depend upon them to quickly and easily determine the apparent power or true power.

To get the true power always use the formula which includes the power factor.

45. CURRENT IN THREE-PHASE CIRCUITS

To determine the current of any phase of a balanced three-phase circuit, when the apparent power in kv-a. and the voltage are known, the following formula can be used:

$$\frac{\text{App. W}}{1.732 \times \text{E}} = \text{I}$$

When the voltage, true power in kw., and power factor are known, the current can be determined as follows:

$$\frac{\text{True W}}{1.732 \times \text{E} \times \text{P. F.}} = \text{I}$$

To determine the voltage when apparent power and amperes are known:

$$\frac{\text{App. W}}{1.732 \times \text{I}} = \text{E}$$

To determine the voltage when true power and amperes are known:

$$\frac{\text{True W}}{1.732 \times \text{I} \times \text{P. F.}} = \text{E}$$

The voltage and current can also be determined with voltmeter and ammeter, when they are available. Check these formulas by actual meter tests while you are in the A. C. Department of your shop course.

46. PRACTICAL FIELD PROBLEMS

What will be the true power of a balanced three-phase circuit which has 20 amperes flowing at 440 volts, and at 80 per cent P. F.?

Using the formula:

$$\text{True power} = 1.732 \times \text{E} \times \text{I} \times \text{P. F.}$$

our problem becomes:

$$440 \times 20 \times 1.732 \times .80$$
$$440 \times 20 = 8800$$
$$8800 \times 1.732 = 15241.6 \text{ apparent power}$$
$$15241.6 \times .80 = 12193.28 \text{ true watts}$$

The apparent power in kv-a. will then be:

$$\frac{15241.6}{1000}, \text{ or } 15.24 \text{ kv-a.}$$

The true power in kw. will be:

$$\frac{12193.28}{1000}, \text{ or } 12.2 - \text{kw.}$$

Suppose that in another case you have made a meter test on the circuit to a 65 h. p., three-phase induction motor. The voltmeter shows 230 volts across any one of the three phases, and an ammeter connected first in one phase and then the others, shows that the load is properly balanced and that 85 amperes is flowing in each wire. What is the apparent power of this circuit in kv-a?

Using the formula:

$$3 \text{ Ph. App. W.} = E \times I \times 1.732$$

We find that $E \times I = 230 \times 85$, or 19,550

Then $19{,}550 \times 1.732 = 33{,}860.6$ watts, and $33{,}860.6 \div 1000 = 33.86+$ kv-a.

Testing this same circuit with a wattmeter, we find only 20,320 watts or 20.32 kw. of true power in the circuit.

Assuming that both the voltmeter and ammeter test and the wattmeter tests were made at the same time, and while the motor was operating under the normal mechanical load which it drives, what is the power factor of the circuit?

$$\text{P. F.} = \frac{\text{true power}}{\text{apparent power}}$$

or, in this case,

$$\text{P. F.} = \frac{20.32}{33.86}, \text{ or } 60+ \text{ P. F.}$$

This is a very low and undesirable power factor, and if we check the motor input in h. p., we will find the probable cause of the low power factor.

The motor is rated at 65 h. p., but is consuming only 20.32 kw. of true power when running with its normal connected load. As 1 kw. is equal to 1.34 h. p., then $20.32 \times 1.34 = 27.2+$ h. p., and this is less than half of the motor's full rating.

Lightly-loaded induction motors operate at a much lower P. F. than fully loaded ones, and are common causes of low power factor.

In cases such as the one in this problem, if the mechanical load on the motor is never more than 27.2 h. p. and not particularly difficult to start, the 65 h. p. motor should be changed to one of about 27 or 30 h. p., to obtain better P. F. and higher efficiency.

If the total true power in a balanced, 440-volt, three-phase system is 125 kw., and this system is operating at 90 per cent. power factor, what will be the current in each phase?

Referring back to the formula given for finding current in a 3 Ph. circuit, when the true power, power factor, and voltage are known, we find that:

$$I = \frac{\text{True watts}}{1.732 \times E \times \text{P. F.}}, \text{ or}$$

in this case, 125 kw. = 125.000 true watts; therefore

$$I = \frac{125{,}000}{1.732 \times 440 \times .90}, \text{ or } 182.2+ \text{ amperes.}$$

Work out this problem and prove the figures. Practice working problems with the formulas given in this section until you are quite familiar with their use and the manner in which the power factor affects such calculations on actual circuits and machines which you will encounter in your work.

POWER MEASUREMENT

In the preceding articles we have mentioned several times the use of meters to measure the voltage, current, or power of A. C. circuits.

It is very important that you appreciate the great value of meters in such work, and also that you know how to properly connect and use them. This fact was emphasized in the section on Direct Current and it is equally as important, or even more so, in connection with A. C. circuits and machines.

The intelligent use of the proper meters often helps to improve the efficiency of operation of various power machines, and also prevents damage to equipment by making sure that the voltage and current are right for the design and rating of that equipment.

In many cases very great savings can be effected by permanently connecting the proper meters to certain heavy power circuits or the circuits of individual machines, to allow frequent observation of voltage, load, and power factor conditions.

Frequently the saving effected in this manner will more than pay for the cost of the meters, in the first few months of their use.

On circuits where no meters are permanently installed, it is well to make periodic tests with portable meters, to see that the machines or circuits are operating at proper voltage, and that they are not overloaded. These tests will also show if certain machines are operating lightly loaded and causing low power factor and poor efficiency.

Many of the values for A. C. circuits can be easily calculated when certain others are known, by the use of the formulas which have been given in the preceding articles. In other cases, it may be much quicker and easier to use meters to determine these values. By using meters where necessary or most convenient, and the simple formulas where meter readings are not obtainable, practically any problem can easily be solved.

47. CONNECTING INSTRUMENTS

When making any tests with portable meters or when installing permanent meters, it is very important to get all connections properly made. Otherwise, incorrect readings will be obtained, and wrong connections may result in damage to the instruments, or danger to the person making the connections.

With A. C. voltmeters, ammeters, and wattmeters also, the same general rule applies as was given for

D. C. meters: **always connect voltmeters and potential elements of wattmeters across the line, and always connect ammeters and current elements of wattmeters in series with the line — never in parallel.**

The coils or shunts of ammeters and of the current elements of wattmeters are of so low resistance that if they were connected across the line, a short circuit would result and probably burn out the instrument. In such cases there is also danger of the operator being burned by flying drops of molten copper, or of his getting "flashed eyes" from the blinding flash of the arc which may be caused by the short circuit, when wrong connections are made to live circuits.

The following connection diagram and instructions for the use of meters on various tests are given to enable you to make such tests correctly and safely.

48. POWER MEASUREMENT ON SINGLE-PHASE CIRCUITS

Fig. 31 shows the proper connections for a voltmeter, an ammeter, and a wattmeter in a single-phase circuit. Note that the voltmeter and potential coil of the wattmeter are both connected **across** the line; and that the ammeter and the current coil of the wattmeter are both connected **in series** with the line.

It does not matter which side of the line the ammeter and wattmeter are connected in, as all the current to the motor must flow through each line wire, and correct total readings can be obtained from either wire.

The voltmeter in this case will indicate whether or not the line voltage is proper for the voltage rating of the motor as given on the name-plate of the machine.

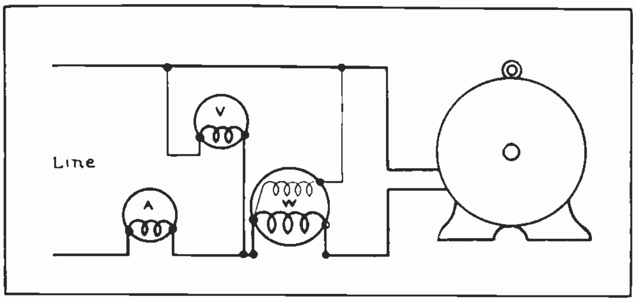

Fig. 31. This sketch shows the method of connecting the meters to measure voltage, current, and power of a single-phase motor.

Too low a voltage will cause reduced torque and poor efficiency of motors, and possibly also cause them to overheat.

The ammeter when connected as in Fig. 31 will indicate the current load on the motor and show whether the machine is overloaded, or possibly too lightly loaded most of the time. The full-load current rating of A. C. motors is usually stamped on their name-plates.

The wattmeter may be used instead of the ammeter to determine the load on the machine; but if the power factor is low, the wattmeter reading divided by the voltage is not a reliable indication of the current load on the machine; because with low power factor there may be considerable wattless current flowing.

The wattmeter can be used with the voltmeter and ammeter to determine the power factor of the machine. The wattmeter will read the true power, and the product of the voltmeter and ammeter readings will give the apparent power. Then, dividing the true power by apparent power will give the power factor, as previously explained.

The wattmeter reading gives the true power input to the motor, and enables one to calculate the h. p. the motor should deliver if it is operating properly.

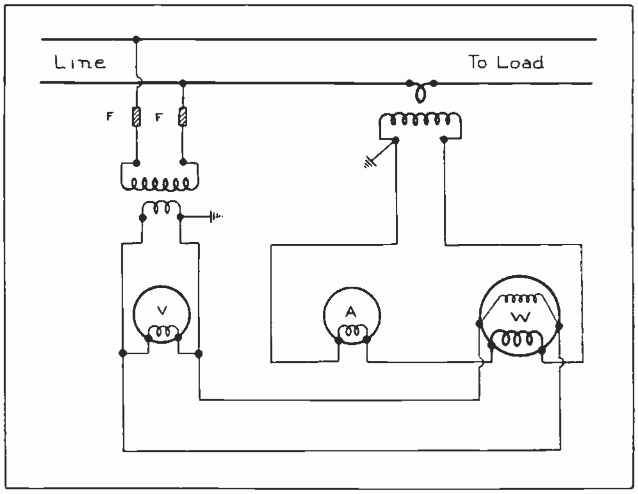

Fig. 32. When meters are used to measure the energy of high voltage lines instrument transformers are used to reduce the voltage and current to the meters.

49. METER CONNECTIONS FOR HIGH VOLTAGE CIRCUITS

Fig. 32 shows the meters and connections for measuring the voltage, current, and power of a high-voltage circuit, where **instrument transformers** are used.

On circuits over 600 volts, meters are very seldom connected directly to the line, because of the danger to operators and the difficulty and expense of insulating the meter elements for the higher voltages.

Special transformers are used to reduce the voltage and current at the meters to a definite fraction of the voltage and current on the line. These transformers are called **current transformers** and **potential transformers,** and are designed to maintain on their secondaries a fixed ratio of the voltage or current on their primaries. The meters used with such transformers can, therefore, be calibrated to read the full voltage, current, or power on the line.

The potential transformer (P. T.) in Fig. 32, has its primary winding connected across the line, and its secondary supplies both the voltmeter and the potential coil of the wattmeter, which are connected in parallel.

The current transformer (C. T.) has its primary coil connected in series with the line, and its secondary supplies both the ammeter and the current coil of the wattmeter, which are connected in series.

You will note that the secondaries of both transformers are grounded, to prevent damage to instruments and danger to operators in case the insulation between the high-voltage primary and the low-voltage secondary coils should fail.

The potential transformer is equipped with fuses in its primary leads.

Never disconnect an ammeter from a current transformer without first short-circuiting the secondary coil of the transformer.

If the secondary of a current transformer is left open while its primary is connected to the line, dangerously high voltages may be built up in the secondary. This will be more fully explained in a later section on transformers.

50. DETERMINING RESISTANCE OF A. C. CIRCUITS

Resistance measurements on A. C. circuits can be made by use of a Wheatstone bridge or a megger, both of which were explained in the section on D. C. meters. The Wheatstone bridge is most frequently used for making accurate tests on lines or devices of various resistances, although the megger is very convenient for making tests where extreme accuracy is not required.

The resistance of an A. C. circuit or device can also be calculated from voltmeter and ammeter readings, by passing low-voltage direct current through the circuit under test. Inductance does not oppose the flow of D. C., so the current flow will be proportional to the voltage and resistance only.

When the voltage and current readings are obtained with D. C. meters and with D. C. voltage applied to the circuit, the resistance can then be determined by the formula $E \div I = R$, with which you are already familiar.

It is well to remember that the resistance of wires and metallic circuits of copper, aluminum, iron, etc., will increase with any increase in the temperature of the conductors. This is particularly true of iron or resistance alloys in rheostats, and of the filaments in incandescent lamps.

The resistance of lamp filaments when heated to incandescence may be from 4 to 10 times as high as it is at 70° F., or ordinary room temperature.

51. CURRENT MEASUREMENTS ON THREE-PHASE CIRCUITS

Fig. 33 shows a three-phase motor with an ammeter connected in one of its phase wires to measure the current. If the motor is operating properly, the current should be very nearly the same, or balanced in all three phases. Prove this by actual tests on some of the motors in the A. C. Department of your shop course.

The current rating on the name-plate of any three-phase motor is the amount of current that should flow in each of the three wires leading to the motor. Therefore, if the motor shown in Fig. 33 has a name-plate rating of 50 amperes, an ammeter should show 50 amperes in any of the three phases when the motor is operating fully loaded.

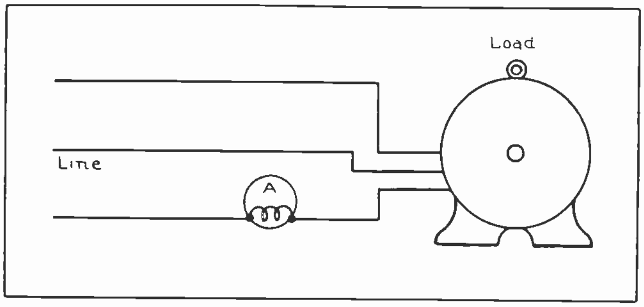

Fig. 33. Ammeter connected to measure the current in one phase of a three-phase motor.

If the current is unbalanced to any great extent, it indicates that there is probably a fault in one or more of the phases in the motor winding.

Where the current of a three-phase system is known to be balanced at all times, one ammeter permanently connected in any phase is all that is required to determine the current.

It is well, however, to occasionally test all three phases with a portable ammeter, to locate any possible unbalance which may occur due to faulty machine windings; or to locate unbalance which may occur on main wires by connecting more single-phase equipment on some one phase than on another.

All single-phase load connected to a three-phase system should be kept balanced as much as possible, by connecting an equal number of devices or equal loads in kv-a. to each phase.

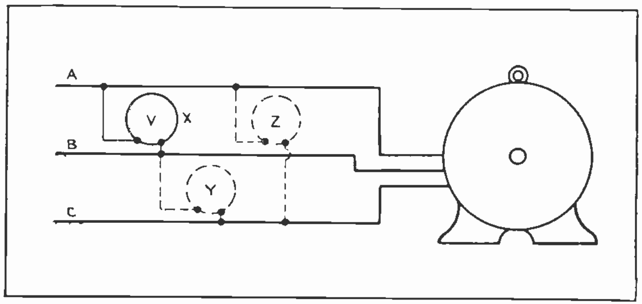

Fig. 34. This diagram shows three different connections for a voltmeter used to measure the voltage of each phase of the three-phase line to this motor.

Where the load is likely to be unbalanced and the amount of load on the different phases is varying, it is often well to have three ammeters, one connected in each phase.

52. VOLTAGE MEASUREMENTS ON THREE-PHASE CIRCUITS

Fig. 34 shows the method of connecting a voltmeter to indicate the voltage of a three-phase system or motor. The voltmeter can be connected between any two of the three wires, and should show approximately the same reading on all phases.

Slight variations of voltage between the various phases generally do no harm, but if the voltmeter shows widely varying readings when connected first at X, then at Y, and then at Z, and particularly if these voltages are below normal, it indicates that the circuit is probably unbalanced.

This unbalance and reduced voltage on certain phases will decrease the torque and efficiency of three-phase motors operating on the line.

53. POWER MEASUREMENTS ON THREE-PHASE CIRCUITS

For measuring the power of three-phase circuits, either single-phase or polyphase wattmeters can be used. The readings of single-phase wattmeters can be totalled up to obtain the three-phase power, while a three-phase wattmeter will read directly the true power of all three phases.

Where single-phase wattmeters are used, the **two wattmeter method** shown in Fig. 36 is very commonly applied.

In order to obtain correct results with the two meters, it is necessary to test them to make sure that corresponding coil leads are brought out to the same meter terminals; or, if they are not, to get them correctly marked so that the meters can be connected properly to the three-phase wires to get the right polarity of the meter coils.

To test the meters, connect them both to a single-phase circuit, or to the same phase of a three-phase circuit, as shown in Fig. 35-A. Make sure that there is some load on the circuit to enable the meters to show a reading.

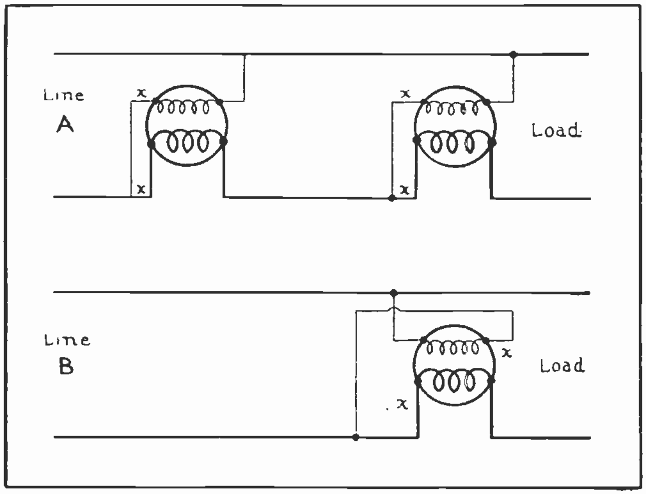

Fig. 35-A. Above is shown the method of connecting wattmeters to a single-phase circuit to locate the proper terminals of the potential and current coils.
Fig. 35-B. This sketch illustrates the method of reversing the leads to the potential coil if necessary, to make the meter read properly.

If both meters give the same indication with their pointers moving across the scale in the right direction, then carefully mark or tag the terminal of the potential coil and the terminal of the current coil which are connected together and to the line. In this figure these leads are each shown marked with an "X".

If one of the meters reads "backwards" when connected as shown in Fig. 35-A, the potential coil leads should be reversed as shown in Fig. 35-B. The meter should then read "forward"; that is, its pointer should swing to the right across the scale. The terminals or leads should then be marked as shown.

With the two meters now connected to the three-phase circuit as shown in Fig. 36 and **with** the proper terminals connected together and to the lines, the meter readings will be called **"positive" readings.** The sum of the two meter readings will be the total three-phase power of the circuit. If the meters are properly connected as shown in Fig. 36 and the pointer of one meter attempts to swing backwards, or below zero, the potential leads of that meter should be reversed, as shown on meter No. 2 in Fig. 37. Its reading is then called **"negative,"** and should be subtracted from that of the positive meter to get the three-phase power.

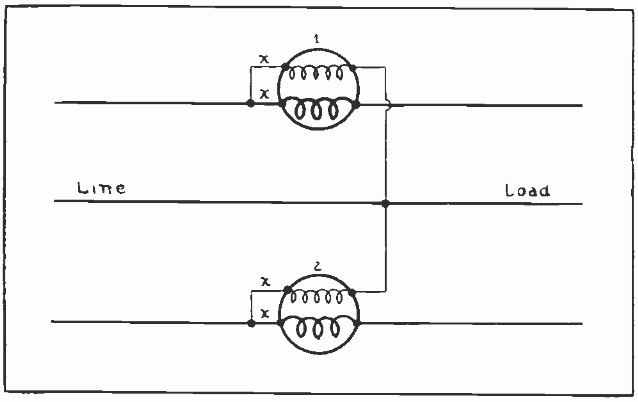

Fig. 36. This sketch shows the connections for using two single-phase wattmeters to measure the power in a three-phase circuit.

54. CORRECT CONNECTIONS NECESSARY FOR ACCURATE RESULTS

Fig. 38 also shows the connections for the "two wattmeter method" but shows the current coil of one of the meters connected in a different phase from what it was in Fig. 36. The current coils of the two wattmeters can be connected in any two of the three phases, and if the potential coil leads are properly connected the results should be the same. However, one of the potential coil leads of meter No. 2 is connected wrong in Fig. 38, as this connection will give correct readings only when the power factor is unity, or 100%.

As unity power factor is seldom found on any A. C. circuit, this connection should usually be avoided, and the potential coil lead should be connected as shown by the dotted line.

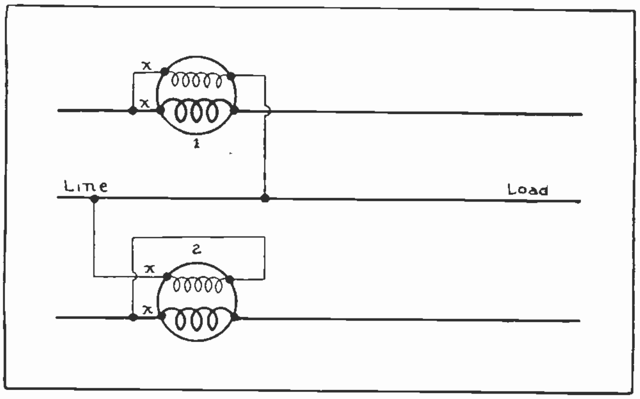

Fig. 37. This diagram shows the connections to the lower wattmeter reversed to obtain proper readings on circuits with low power factor.

When the "two wattmeter method" is used, the ends of the potential coils which are not attached directly to the same wire with their current coils should connect to the phase wire in which no current coil is connected; as shown in Fig. 36, or in Fig. 38 after the one lead is corrected as shown by the dotted line.

It may at first seem peculiar that two wattmeters used in this manner will give the total three-phase power of the circuit. This is true, however, because the current which flows to the lead through the unmetered wire at any instant must be flowing back to the alternator through one or both of the other wires, thus allowing the two meters to read full 3 Ø power.

The phase relations between the currents and voltages of a balanced three-wire system are such that the "two wattmeter method" will accurately give the total three-phase power, if the connections are properly made and the readings are added if they are both "positive", or subtracted if one is "negative" and the other "positive".

If wattmeter No. 1 in Fig. 36 reads 8000 watts and meter No. 2 reads 6000 watts, the total power will be 8000 + 6000, or 14,000 watts.

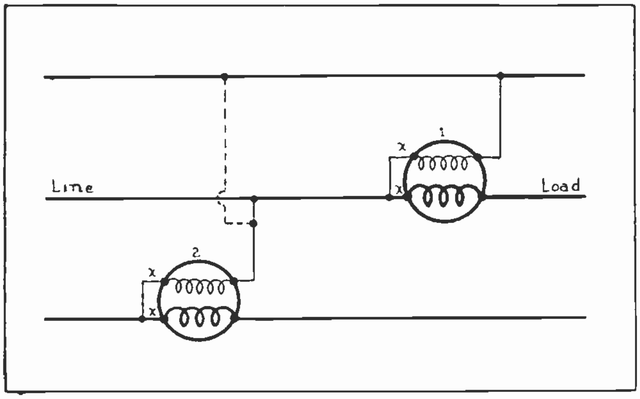

Fig. 38. This sketch shows the correct and incorrect methods of connecting one of the wattmeters when measuring three-phase power by the "two wattmeter method".

If the meters must be connected as shown in Fig. 37 to obtain readings above zero, then the negative reading must be subtracted from the positive reading to get the total power.

For example, if meter No. 1 in Fig. 37 reads 20,000 watts and meter No. 2 reads 6,000 watts, then the total power will be:

20,000 — 6,000, or 14,000 watts.

In all circuits where the power factor is less than 50 per cent., one of the two wattmeters will give a negative reading.

On circuits where the load is quite constant, one wattmeter can be used to determine the three-phase power, by connecting it first in one phase and then in another, as shown at positions 1 and 2 in Fig. 39.

The reading of the meter in position 1 is noted, and the meter is then shifted to position 2, and the reading is again noted. If both readings are "positive", their sum will give the total true power. If one reading is "positive" and one negative, their difference will give the total true power.

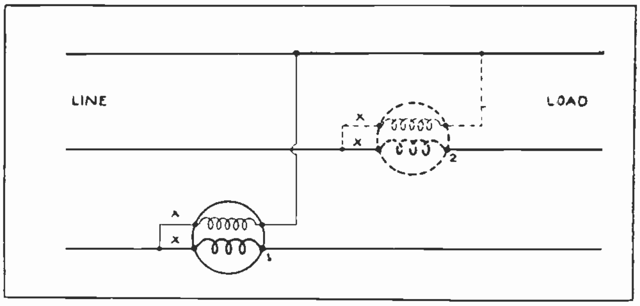

Fig. 39. The above diagram shows the manner of connecting one wattmeter in two different phases of a three-phase system in order to measure the total power.

One wattmeter should not be used to determine total three-phase power on circuits where the load varies much, as the load may change while the meter connections are being changed, and thus give an incorrect total.

55. POWER MEASUREMENT ON HIGH VOLTAGE CIRCUITS

Fig. 40 shows the connections for the "two wattmeter method" of measuring three-phase power on high-voltage circuits where instrument transformers are used.

Separate potential transformers supply the voltage from the two phases to the potential elements of the wattmeters. Separate current transformers supply the proportional current from the two phases to the current elements of the two wattmeters.

The same procedure of marking the potential and current coil leads and checking the positive or negative readings is followed in this case as when no instrument transformers are used.

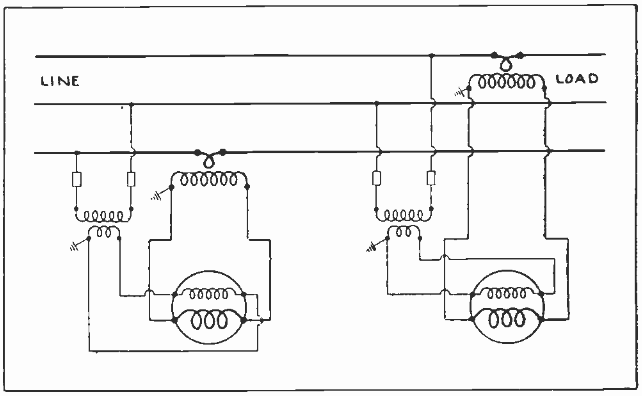

Fig. 40. Connections for two wattmeters on a three-phase circuit, using instrument transformers to reduce the voltage and current to the meters.

56. THREE METER METHOD OF POWER MEASUREMENT

Fig. 41 shows three wattmeters used to measure the total power of a three-phase system.

With this connection we use a "Y box" which consists of three separate resistances, connected together at one end to form a star connection and provide a neutral point to which one end of each wattmeter potential coil is connected.

When connected in this way, each wattmeter measures only the power of the phase in which it is connected, and the total power will be the sum of the three meter readings.

For example, if meter No. 1 reads 14,000 watts, meter No. 2 reads 16,000 watts, and meter No. 3 reads 17,000 watts; the total power will be 47,000 watts.

Wattmeters connected in this manner will always read "positive" regardless of the power factor.

This makes the method very simple and reliable and one which is very commonly used on large power circuits, where very accurate readings are important and all chance of error should be avoided.

For measuring the total power of a three-phase, four-wire system, the connections shown in Fig. 42 are used. In these systems the neutral wire is already provided by the fourth wire which is connected to the star point of the windings of the alternator or at the transformer connections, and therefore no Y box is needed.

The total power of the three-phase, four-wire system thus measured will be the sum of the three meter readings.

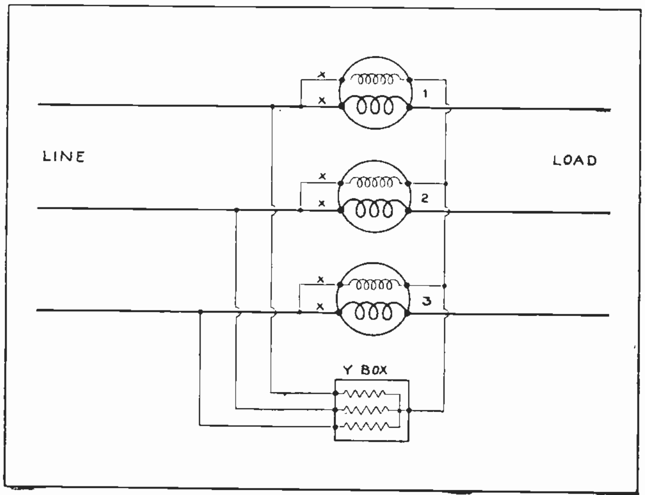

Fig. 41. Meter connections for a "three wattmeter method" for measuring the total power in a three-phase circuit. The Y Box shown in this diagram is explained in the accompanying paragraphs.

57. METERING THE OUTPUT OF AN ALTERNATOR

Fig. 43 shows the meters and connections for measuring the power output of an alternator, both in true power and apparent power, and also for determining the voltage, current, and power factor.

We will assume that the meter readings are as follows:

Voltmeter = 440 E
Ammeter = 60 I
Wattmeter No. 1 = 18,250 W
Wattmeter No. 2 = 21,750 W

The total three-phase true power will then be 18,250 + 21,750 = 40,000 W, or 40 kw.

The total three-phase apparent power will be E × I × 1.732, or 440 × 60 × 1.732 = 45,724.8 watts or approximately 45.725 kv-a.

The power factor will then be $\frac{\text{true power}}{\text{app. power}}$ or, 40 ÷ 45.725 = .831, or 83.1% P.F.

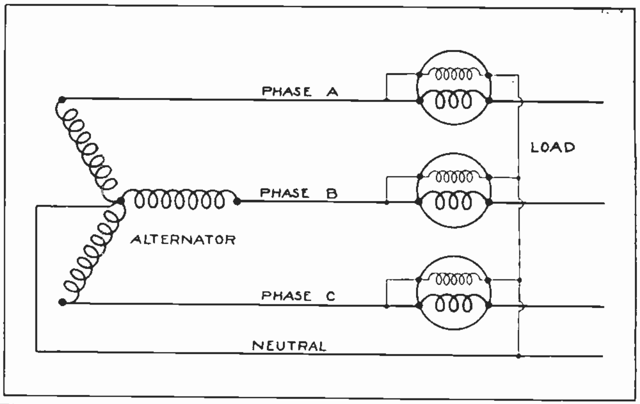

Fig. 42. This diagram shows the connections for three wattmeters to measure the power of a three-phase, four-wire system.

58. PRACTICAL METER TEST AND POWER PROBLEMS

The following practical examples are given for your practice, to make you thoroughly familiar with the use of the formulas and methods commonly used on actual circuits in the field.

In a great many cases the men who can make these calculations as well as operate and maintain the machines intelligently are the men who become foremen or chief operators.

Assume that we have made a meter test of a single-phase circuit and have obtained the following readings:

Voltmeter = 220 E
Ammeter = 80 I
Wattmeter = 14,000 W

What will be the kw., kv-a., and P.F. of this circuit?

Use the proper formulas in each case, looking them up in the preceding articles if necessary, and work out each part of the problem step by step, and carefully.

The answers are given here to enable you to check your results.

kw. = 14, kv-a. = 17.6, and P.F. = 79.5%

In another case, you are called upon to make a test of an alternator and you obtain the following meter readings:

Voltmeter = 2200 E
Ammeter = 50 I
Wattmeter = 160,000 W

What will be the kw., kv-a., and P.F.?

Answers: kw. = 160, kv-a. = 190.5+, and P.F. = .839 or 84−%.

On a two-phase system we find a voltage of 200 E on each phase, current of 60 I on each phase, and a wattmeter reading shows 9,000 watts on each phase. What will be the kw., kv-a., and P.F.?

Answers: kw. = 18, kv-a. = 24, and P.F. = .75.

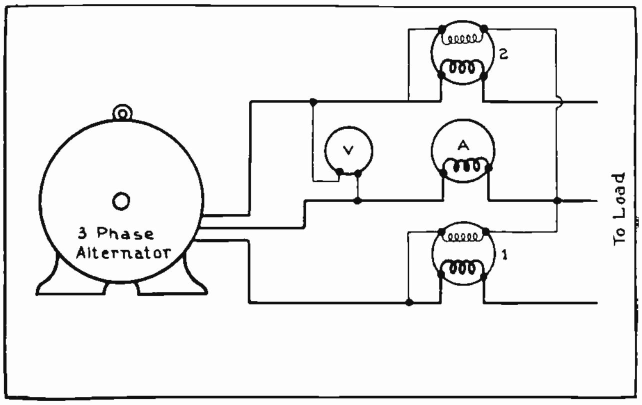

Fig. 43. Voltmeter, ammeter, and wattmeter connected to measure the voltage, current, and power output of a three-phase alternator.

If a coil or winding of an A. C. machine has a flow of 5 amperes through it when connected to 200 E, A.C., and has 20 amperes through it when connected to 100 E, D.C., what will be the impedance, the resistance, and the P.F. of the winding?

On A. C. circuits:

$$\frac{E}{I} = Z, \text{ therefore } \frac{200}{5} = 40 \text{ ohms impedance}$$

On D. C. circuits:

$$\frac{E}{I} = R, \text{ therefore } \frac{100}{20} = 5 \text{ ohms resistance}$$

When both the resistance and impedance are known,

$$\frac{R}{Z} = \text{P.F., Therefore, } \frac{5}{40} = \frac{1}{8} = \text{—, or } .125,$$

or 12½ % P.F.

If a circuit with a condenser or capacity effect, causing a capacity reactance of 20 ohms, is connected in series with a resistance of 12 ohms, what is the total impedance and the P.F ?

$$Z = \sqrt{R^2 + Xc^2}, \text{ or } Z = \sqrt{12^2 + 20^2}$$

$$12^2 = 12 \times 12 \text{ or } 144$$

$$20^2 = 20 \times 20 \text{ or } 400$$

$$144 + 400 = 544$$

$$\sqrt{544} = 23.3+ \text{ , ohms impedance}$$

$$\frac{R}{Z} = \text{P.F., or } \frac{12}{23.3} = .515, \text{ or } 51.5\% \text{ P.F.}$$

COYNE
Electrical School
CHICAGO ~~ ILLINOIS
ESTABLISHED 1899

ALTERNATING CURRENT
AND
A. C. POWER MACHINERY

Section Two

A. C. Meters
Types, Construction, Operating Principles
Voltmeters, Ammeters, Wattmeters
Watthour Meters
Demand Indicators, Power Factor Meters
Frequency Meters, Synchroscopes

ALTERNATING CURRENT METERS

Alternating current meters are in many respects very similar to direct current meters, which were explained in the D. C. Section Two.

Ordinary A. C. meters consist of: The moving element, which is delicately balanced and mounted in jeweled bearings and has the pointer or needle attached to it; a controlling force or spring to limit the movement of the pointer and movable element; a stationary coil or element to set up a magnetic field; a damping vane or element to prevent vibration or excessive "throw" of the pointer; and the meter scale and case.

One of the principal differences between A. C. meters and D. C. meters is that, while certain types of D. C. meters use permanent magnets for providing the field in which the moving element rotates, A. C. meters use coils instead.

Some types of A. C. meters, also, operate on the induction principle, which is not used in D. C. meters.

59. TYPES OF A. C. METERS

There are several different types of A. C. meters each of which uses different principles to obtain the torque for moving the pointer. Some of the most common of these types are: The moving-iron repulsion type; inclined coil and moving vane type; dynamometer type; induction type; and hot-wire type.

Some types of A. C. meters can also be used on D. C. circuits with fair results, but they are usually not as accurate on D. C.

60. MOVING IRON TYPE INSTRUMENTS

The moving-iron principle used in some makes of A. C. voltmeters and ammeters is illustrated by the several views in Fig. 44. This is one of the simplest principles used in any type of alternating current meter, and is based upon the repulsion of two soft pieces of iron when they are magnetized with like polarity.

If two pieces of soft iron are suspended by pieces of string within a coil, as shown in the upper left-hand view of Fig. 44, and current is passed through this coil, the flux set up within the turns will magnetize the two parallel pieces of iron with like poles at each end. The repulsion of like poles will cause the two iron strips to push apart, as shown in the top center view. This effect will be produced with either D. C. or A. C. flowing in the coil, because it makes no difference if the poles of the iron strips do reverse, as long as like poles are always created together at the top and bottom ends of each strip.

The view at the upper right shows the poles reversed, and the strips still repel as before. They must, of course, be made of soft iron so their polarity can reverse rapidly with the reversal of the A. C.

Now, if the two iron strips are again suspended in a horizontal coil, as shown in the lower left view, and one of the strips is in this case rigidly attached to the side of the coil and the other suspended by a string so that it is free to move, the strips will again repel each other or push apart when current is passed through the coil, as shown in the lower center view.

The view at the lower right shows how this principle can be applied to move the pointer of the meter. One small piece of soft iron is attached to the coil in a fixed position as shown. The other piece is attached to the movable element or pointer, which is mounted on a shaft and pivots, so it is free to move.

When alternating current is passed through the coil, the two iron vanes are magnetized with like poles, and the repulsion set up between them causes the movable one to rotate in a clockwise direction and move the pointer across the scale.

61. A. C. VOLTMETERS AND AMMETERS

This principle and method of construction can be used for both voltmeters and ammeters, by simply making the coil of the proper resistance and number of turns in each case.

Ammeter coils usually consist of a very few turns of large wire, as they are connected in series with the load or in parallel with an ammeter shunt. Ammeters designed for use with shunts or current transformers, however, usually have coils of smaller wire and a greater number of turns.

Voltmeter coils are wound with a great number of turns of very fine wire, in order to obtain high enough resistance so they can be connected directly across the line.

Separate resistance coils are sometimes connected

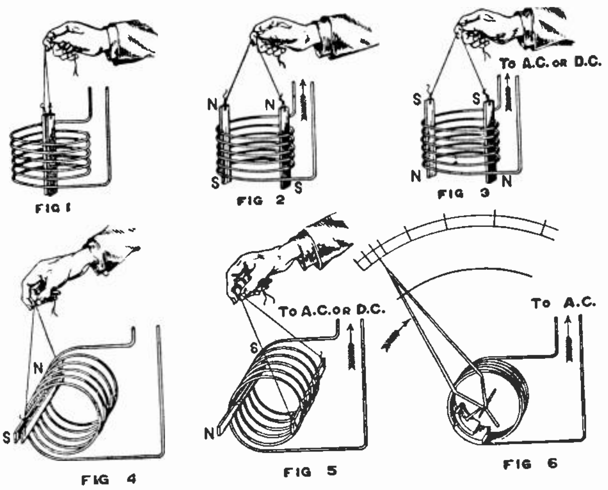

Fig. 44. The above views illustrate the principle of the moving-iron type meter. Note how the iron bars repel each other when they are magnetized with like poles, by the flux of current through the coils.

in series with the coils of voltmeters to provide sufficient resistance to limit the current through them to a very small amount. The current required to operate a voltmeter usually does not exceed a very few milli-amperes.

Fig. 45 shows a meter of the moving vane type. The iron vanes are made in several different shapes, but always operate on the same principle of the repulsion between like poles.

Some meters of this type depend upon the weight of the moving iron vane and a small adjustable counter-weight to react against the magnetic force as the pointer is moved across the scale. Other meters use a small coil spring to oppose the pointer movement.

This type of meter can be used on D. C. circuits also, but may not be as accurate, because of the tendency of the iron vanes to hold a little residual magnetism from the constant direct current flux which is applied to them.

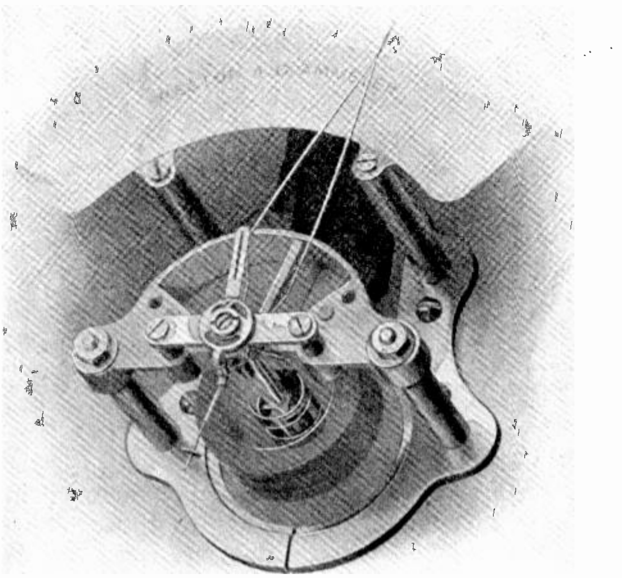

Fig. 45. This photo shows the construction and important parts of an iron-vane meter. Note the position and shape of the iron vanes within the coil and also note the damping vane and chamber above the coil.

62. DAMPING OF METERS

The damping chamber can be seen directly behind the lower part of the pointer in Fig. 45. The damping vane, made of very light-weight material and attached to the pointer, moves in this air chamber as the pointer moves. This vane doesn't touch the sides of the chamber but fits closely enough so that it compresses the air on one side or the other as it moves in either direction. This prevents oscillation of the pointer with varying loads and permits more accurate readings to be obtained.

For damping the pointer movement some instruments use a small aluminum disk which is attached to the pointer and moves between the poles of a permanent magnet. This operates similarly to the damping disk and magnet explained for D. C. watt-hour meters, the retarding effect being produced by the eddy currents induced in the disk.

Fig. 46 shows the movable assembly of the moving-iron type of instrument, on which can be seen the damping vane, mounted directly beneath the pointer, and also the movable iron vane at the lower end of the shaft, and the small coil spring which controls the pointer movement across the scale.

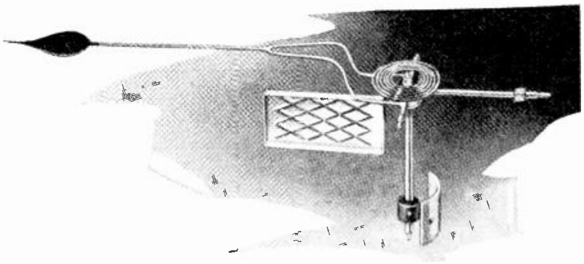

Fig. 46. Moving element of an iron-vane type meter. This view shows the shaft, iron vane, damping vane, pointer, and spring.

63. THOMPSON INCLINED COIL INSTRUMENTS

The Thompson inclined coil and moving vane type of construction is quite extensively used in some makes of A. C. voltmeters and ammeters. This type of meter uses a coil inclined at an angle of about 45 degrees with the back of the instrument, as shown in Fig. 47. This coil supplies the flux to operate a small moving vane of soft iron, which is also mounted at an angle on the shaft of the meter so that it is free to move and operate the pointer which is attached to the same shaft.

When the meter is idle and has no current flowing through the coil, the small coil spring at "C" holds the pointer at zero on the scale. When the shaft is in this position, the movable iron vane is held at an angle to the axis of the coil or to the normal path of the flux set up by the coil when it is energized.

When the coil is energized and sets up flux through its center, as shown by the arrows, the iron vane tends to move into a position where its length will be parallel to this flux. This causes the pointer to move across the scale until the magnetic force exerted is balanced by the counter-force of the spring.

This type of construction is used both for voltmeters and ammeters, by winding the coils with the proper number of turns, as previously explained.

64. DYNAMOMETER TYPE INSTRUMENTS

Dynamometer type instruments are used for voltmeters, ammeters, and wattmeters. Meters of this type have two coils, one of which is stationary and the other which is movable and attached to the shaft and pointer. The torque which moves the pointer is produced by the reaction between the fields of the two coils when current is passed through both of them.

There is usually no iron used in the two elements of this meter; the moving coil being light in weight

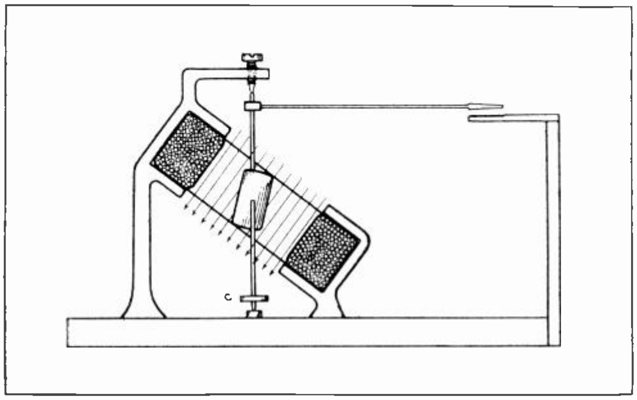

Fig. 47. The above diagram shows the construction and principle of the Thompson inclined-coil meter.

and delicate in construction, but rigid enough to exert the proper torque on the shaft.

In some meters of this type, the movable coil is mounted within two stationary coils, as shown in Fig. 48; while in other types it is mounted near to the side of one large coil, as shown in Fig. 49. In either case, the movement of the smaller coil is caused by the reaction between its flux and the flux of the stationary coil or coils.

When both the stationary and movable coils are excited or energized, the lines of force through their centers tend to line up or join together in one common path. When the pointer is at zero, the movable coil rests in a position so that its axis and the direction of its flux will be at an angle to that of the stationary coils. So, when the current is applied the reaction of the two fields will cause the movable coil to force the pointer across the scale against the opposing force of the delicate coil springs, which can be seen in both Figs. 48 and 49.

These coil springs are usually made of phosphor-bronze alloy, and in some cases they carry the current to the movable coil.

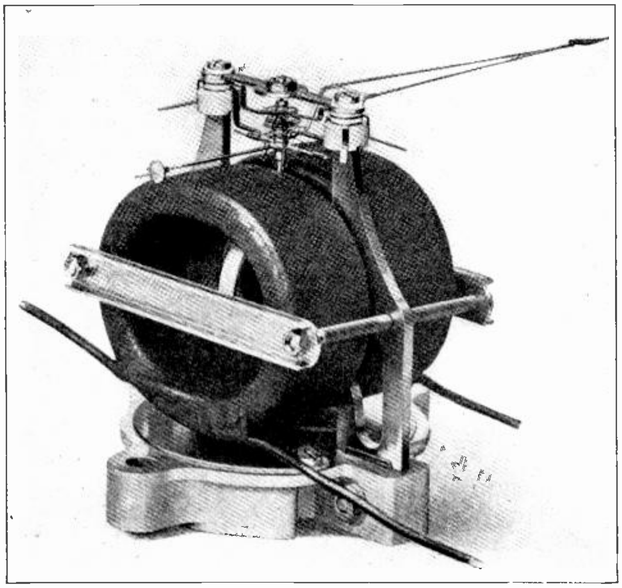

Fig. 48. This view shows the coils of an electro-dynamometer type meter.

Voltmeters of the electro-dynamometer type usually have the two coils connected in series with each other and also in series with a resistor, and then connected across the line.

Ammeters of this same type may have the two coils connected in series and then across an ammeter shunt which carries the main load current. In some cases the stationary coil of an ammeter may carry the full load current, while the movable coil is connected in parallel with a shunt so that it carries only a small fraction of the current.

The movable coil is not designed to carry much current in any case, because it must be light in weight and delicate in construction to obtain the proper accuracy in the operation of the meter.

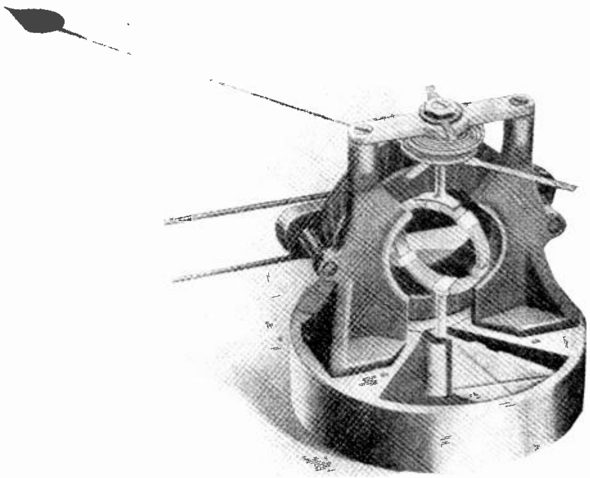

Fig. 49. Another dynamometer type meter with slightly different arrangement of the coils. Note the damping vane attached to the bottom end of the shaft so that it rotates in the damping chamber under the meter element.

65. A. C. WATTMETERS

Wattmeters using the electro-dynamometer principle have elements very similar to those shown in Fig. 48. The stationary coils are used for the current element and may be connected in series with the load or in parallel with a shunt. The movable coil is the potential coil and is connected in series with a resistance, and then across the line.

Resistances used in connection with the coils of A. C. meters are generally of the non-inductive type, so they will not affect the reading of the meter by introducing inductive reactance in the circuit.

While shunts are used in some cases with certain coils of A. C. meters, instrument transformers are also commonly used to reduce the amount of current and voltage applied to the coils of the meters. This eliminates the necessity for current coils with very heavy windings and the necessity of winding potential coils with a great number of turns to obtain high resistance to permit them to be connected across high-voltage lines.

As the current coils in the wattmeter will always carry a current proportional to the amount of load, and the potential coil will carry a current proportional to the voltage applied to its terminals, the torque set up by the magnetic fields of these two coils will be proportional to the power in watts in the circuit. The scale can therefore be graduated and marked to read directly the watts or kw. of the circuit to which the meter is connected.

Since the torque acting on the movable element is proportional to the instantaneous current and voltage, the meter will register the true power of the circuit, regardless of the power factor.

Fig. 53 shows a sketch which further illustrates the principle of the dynamometer-type wattmeter. You will note that stationary current coils which are connected in series with the line, set up a flux which tends to repel the flux of the movable coil and will cause it to move the pointer across the scale to the right.

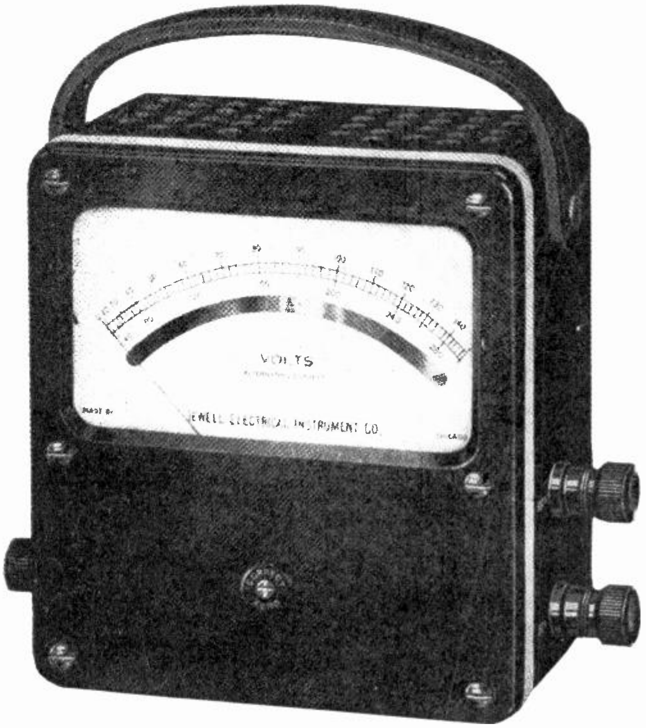

Fig. 50. A convenient style of portable voltmeter used for testing circuits and electrical machinery. (Photo courtesy Jewell Instrument Company.)

Electro-dynamometer type meters are somewhat more delicate and less simple in construction than the moving iron types, but the former are more accurate and therefore generally preferred where exact measurements are desired.

The scale over which the pointer of this instrument moves is not graduated with spaces of even width, because of the fact that the opposing force is a spiral or helical spring and, therefore, becomes greater with greater amounts of movement of the pointer.

66. INDUCTION TYPE INSTRUMENTS

Induction type A. C. meters operate on a principle similar to that of an induction motor, using the magnetic flux of stationary coils to induce currents in a rotating element in the form of a metal cylinder or drum, or in some cases a metal disk.

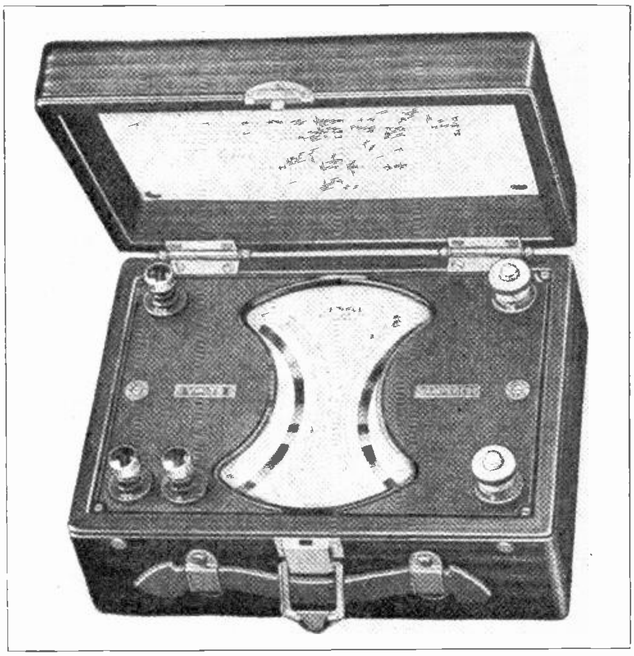

Fig. 51. This portable meter has two elements and two scales, and can be used to measure either volts or amperes. The voltmeter element has an extra terminal to provide increased voltage range of this instrument. (Photo courtesy Jewell Instrument Company.)

Fig. 57 shows a sketch of an induction meter of this type which can be used either as a voltmeter or an ammeter, according to the manner in which the coils are wound and connected.

A set of primary coils and also a set of secondary coils are wound on the upper part of the iron core. The primary coil, being connected to the line, sets up alternating magnetic flux which magnetizes the core and also induces in the secondary coils a current which is out of phase with that in the primary.

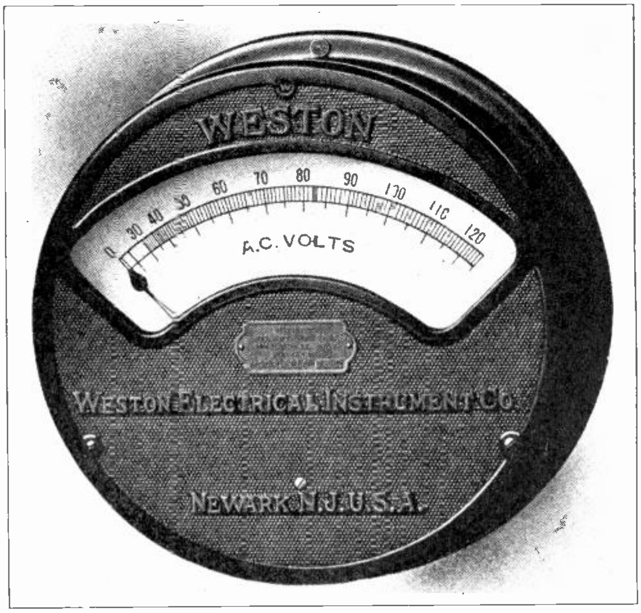

Fig. 52. Switchboard type A. C. voltmeter. Note the tapering graduation at the left end of the scale.

These secondary coils are connected in series with a third set of coils wound in slots at the lower end of the core near the movable drum. The different phase relations between the currents of these coils tend to set up a flux which is out of phase with that established in the core by the primary coil, thereby producing a sort of revolving field which induces eddy currents in the drum. The reaction between the flux of these eddy currents and the flux set up by the coils then causes the drum to tend to rotate by the same principle as used in A. C. induction motors.

The pointer is attached to this drum, so that, when the drum is rotated, the pointer is moved across the scale against the action of the coil springs.

When an instrument of this type is used for an ammeter, the primary coil is wound with a few turns of heavy wire and is connected in series with the line, or it can be wound with small wire and connected in parallel with a shunt or to the terminals of a current transformer.

When used as a voltmeter, the primary coil is wound with more turns of fine wire and is connected in series with a resistance and then across the line.

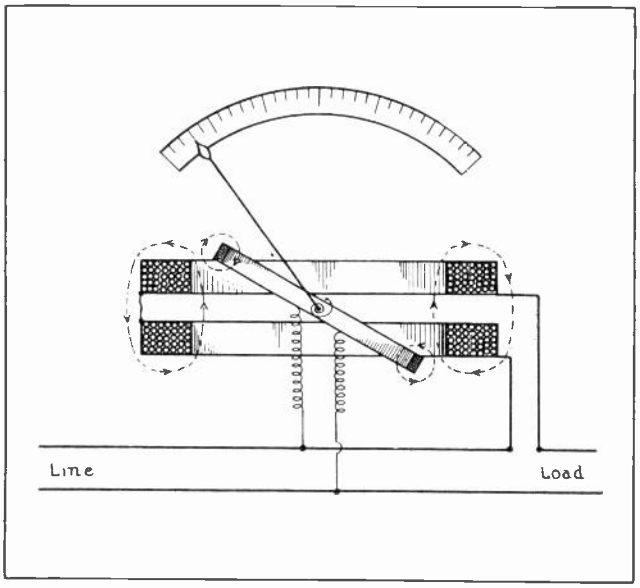

Fig. 53. This diagram illustrates the construction and principles of the dynamometer type instrument. Note the action between the flux of the moving and stationary coils.

67. INDUCTION TYPE WATTMETERS

This same induction principle can be applied to wattmeters, as shown in Fig. 58.

In this case, the potential element consists of the primary coils "P" which are connected in series with a reactance coil "B", and then across the line. The secondary coils "S" have current induced in them by the flux of the primary, and are connected in a closed circuit with a variable resistance "R".

In this manner, the amount of induced current which flows in the secondary coils may be varied by adjusting the resistance, so that the reaction between their flux and that of the primary coils will produce the proper phase relation between the flux set up in the core and the flux of the current coils "C", which are wound in slots near the movable drum.

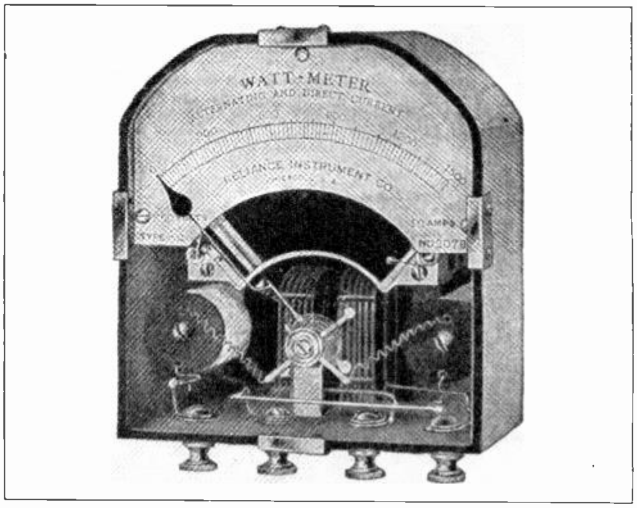

Fig. 54. This view shows the interior construction of a dynamometer type wattmeter. The current coils of the meter, the resistance coils, and damping vane in its chamber can all be plainly seen. (Photo courtesy Reliance Instrument Company.)

This current element is connected in series with the line, or to the proper shunt or instrument transformer.

When both sets of coils are excited, a revolving field is set up, which induces eddy currents in the movable drum, similarly to the operation of the induction voltmeter in Fig. 57.

In this case the strength of the combined flux set up by the potential and current coils will be proportional to the voltage and current of the line. So, with the proper graduation of the scale, this meter can be made to record directly in watts the power of the circuit to which the meter is attached.

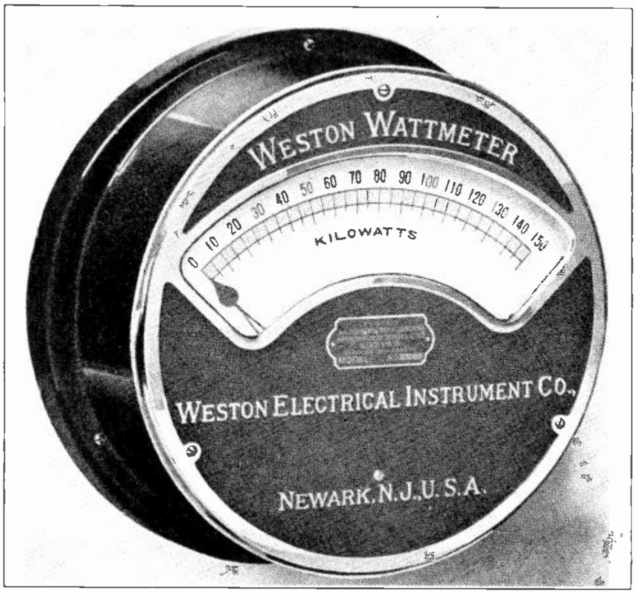

Fig. 55. Switchboard type wattmeter which has its scale calibrated to indicate the load in kilowatts. (Photo courtesy Weston Electrical Instrument Co.)

68. SHADED POLE INDUCTION METERS

Another type of induction meter which uses the **induction disk,** or **shaded pole** principle, is illustrated in Fig. 60.

This type of instrument has the torque produced on a moving disk, by inducing eddy currents in the disk by means of the large exciting-coil "C", and small shading coils "S", on the soft iron core.

When alternating current is passed through the large coil it sets up an alternating flux in the iron core and induces eddy currents in the edge of the disk which is between the poles of the core. The flux also induces secondary currents in the small shading coils, which are built into slots in one side of the pole faces and are short-circuited upon themselves to make closed circuits.

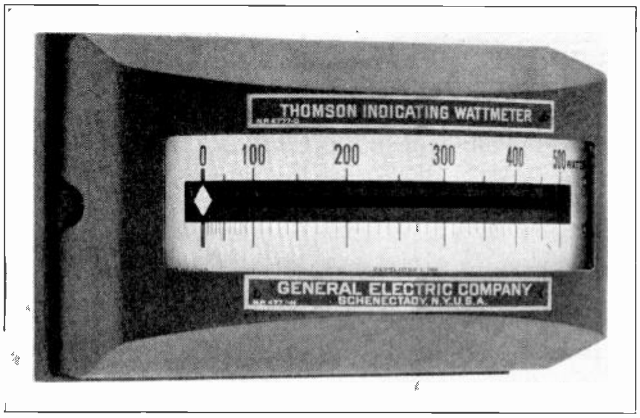

Fig. 56. Another type of switchboard meter known as the "horizontal-edgewise" type. Meters of this type are very commonly used in power plants. (Photo courtesy G. E. Company.)

The induced currents in these shading coils are out of phase with the current in coil "C", and therefore they set up flux which is out of phase with the main core flux. This causes a sort of shifting or sliding flux across the pole faces, which reacts with the flux of the eddy currents in the disk and causes the disk to tend to rotate.

The disk can rotate only part of a revolution, as its movement is opposed by a spring on the shaft. The rotating movement of the disk moves the pointer across a scale as in any other meter.

The movement of the disk and pointer is damped by the drag magnet "M", which induces eddy currents in the disk when it moves and thereby tends to slow its movement and prevent jumping or oscillation of the pointer.

The sides of the moving disk or ring are often cut in a slightly varying or tapering width, to obtain greater torque as the pointer moves farther against the force of the spring. This allows uniform graduation of the scale.

When instruments of this type are used for ammeters, the main coil "C" is connected in parallel with a special alloy shunt, the resistance of which changes with temperature and load changes, to compensate for heat and increased resistance in the coil or disk.

When used as a voltmeter, the coil of the instrument is connected in series with a reactance coil to compensate for changes in frequency, and also in parallel with a shunt to compensate for temperature and resistance changes.

This same principle of induction is applied to A. C. induction watthour meters, frequency meters, and various types of A. C. relays; so it is well worth thorough study to obtain a good understanding of the manner in which it produces the torque in the disk.

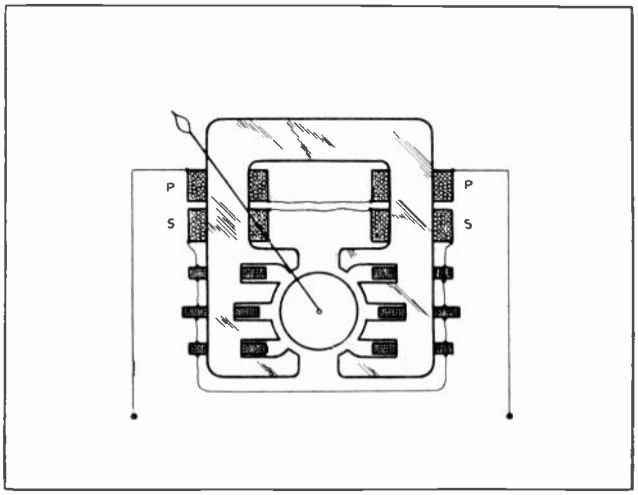

Fig. 57. This diagram shows the core and coils of an induction type meter. Study the principles of this meter thoroughly with the accompanying explanations.

69. HOT-WIRE INSTRUMENTS

Hot-wire instruments are those which obtain the movement of their pointers by the expansion of a wire when it is heated by the current flowing through it.

This principle is illustrated by the diagram in Fig. 61. When the terminals "A" and "B" are connected to a line and current is passed through the wire "W", it becomes heated by the current and expands.

This expansion causes it to loosen and sag, and allows wire "X" to become slack. Wire "Y" is

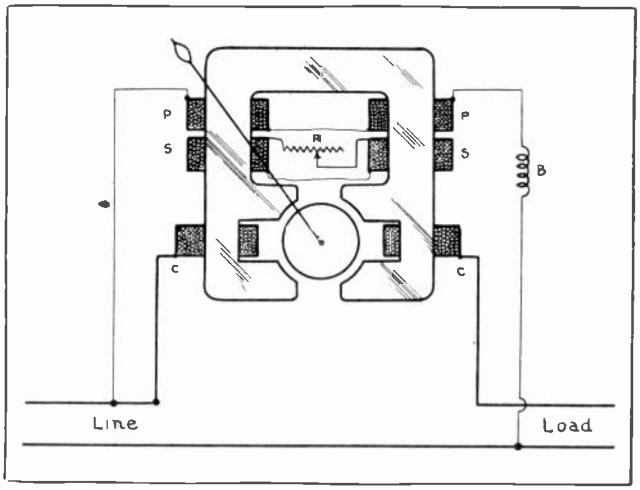

Fig. 58. Core and coils of an induction type wattmeter. Note how the current and potential coils are connected to the line.

attached to wire "X" and is wrapped around a pulley on the shaft to which the pointer is attached. The other end of this wire is attached to a spring which is fastened to the meter case. This spring maintains a continual pull on wire "Y"; so that, as soon as wire "X" becomes slack, wire "Y" is drawn around the pulley and causes it to rotate and move the pointer across the scale.

When the current decreases or stops flowing through wire "W", this wire cools and contracts back to its tight condition and draws wires "X" and "Y" back against the action of the spring; thus returning the pointer to zero.

When instruments of this type are used as ammeters, the wire "W" is connected in series with the line or in parallel with a shunt which is in series with the line. When the device is used as a voltmeter, the wire "W" is connected in series with a resistance and then across the line.

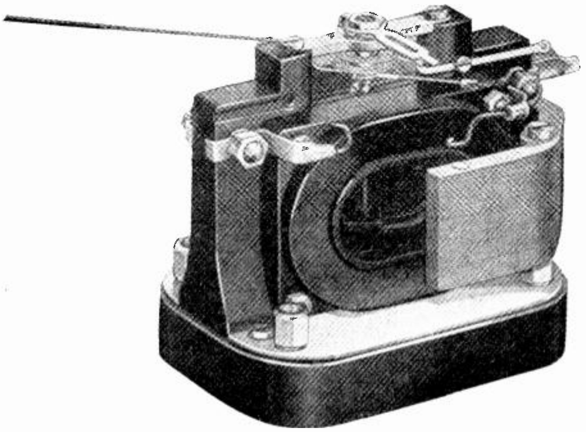

Fig. 59. This photo shows a meter element with part of the magnetic shield in place around it. These shields are made of soft-iron laminations and prevent magnetic flux from other machines or circuits from interfering with the accuracy of the meter. One-half of the shield is shown removed in this view.

Hot-wire meters often have damping disks attached to their shaft, so the disks rotate between the poles of a permanent magnet and retard any sudden movement of the pointer by the action of the induced eddy currents in the disk.

Hot-wire instruments are made in a number of different forms, and with various arrangements of their wires and parts; but all of them operate on the same general principle. Fig. 62 shows the working parts of a hot-wire meter of slightly different construction from that shown in Fig. 61.

Meters of this type can be used on either D. C. or A. C. circuits; but they are particularly adaptable to high frequency A. C. circuits, such as in radio stations, X-ray work, and laboratories where very high frequencies are used. Having no coils in their construction, hot-wire meters are non-inductive and therefore offer less impedance to high frequency currents and read more accurately on varying frequencies.

70. ELECTRO-STATIC VOLTMETERS

Electro-static voltmeters are often used for measuring very high voltages. These meters operate on the principle of the attraction between bodies with unlike charges of static or high-voltage electricity. Fig. 63 shows an electro-static voltmeter, with the case opened to show all the working parts clearly.

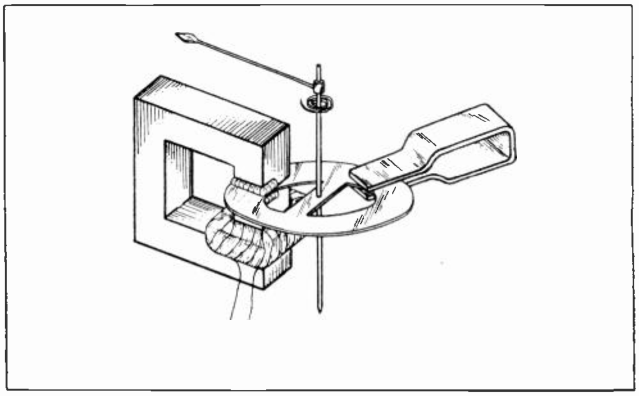

Fig. 60. Diagram illustrating the principles and construction of a disk type induction meter. The torque on the disk is produced by the action of the flux from the shaded pole.

This instrument consists of a set of stationary metal vanes, and a pair of movable vanes of light weight metal. In normal or zero position, the movable vanes hang free of the stationary vanes due to gravity action on a counter-weight attached to the shaft.

When the wires of a high-voltage line are connected to this instrument, one wire to the stationary vanes and one to the movable vanes, charges of opposite polarity will be set up on the vanes. This causes them to attract each other and the movable vanes will be drawn nearer to the stationary ones, or in between them. This moves the pointer across the scale a distance proportional to the voltage applied.

Electro-static voltmeters can be obtained to measure voltages as high as 50,000 volts, or even more. They can also be made to measure quite low voltages, by using a number of vanes, closely

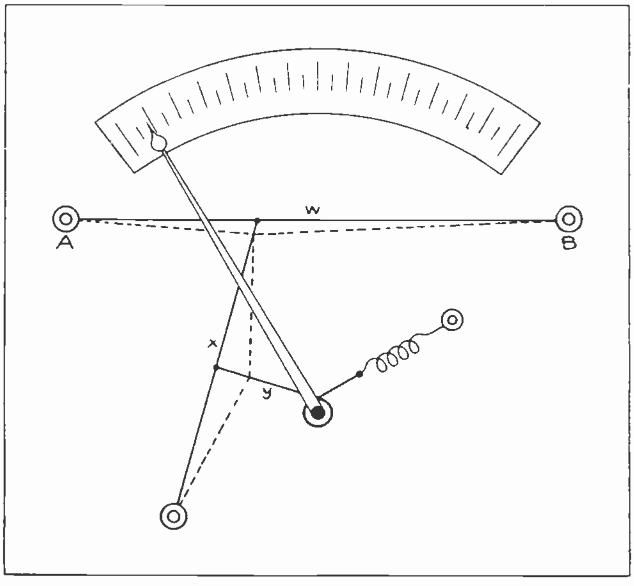

Fig. 61. This sketch shows the operation of a hot-wire meter, in which the movement of the pointer is obtained by the expansion of a wire when heated by passing current through it.

spaced. These instruments will work on either D. C. or A. C. circuits, because it makes no difference if the polarities reverse, as long as the movable and stationary vanes are always of opposite polarity at any instant.

71. A. C. WATTHOUR METERS

A. C. watthour meters are quite similar in many ways to those for D. C., which were explained in the section on D. C. meters. They consist of current coils and potential coils which set up flux and turning effort on the rotating element. The rotating element drives a chain of gears which operate the pointers on a row of four dials, and total up the power used in kilowatt-hours.

Some A. C. watthour meters are of the electrodynamometer type. They have the potential coil wound on the moving armature and are equipped with commutator and brushes similar to those of D. C. watthour meters. The more common type of A. C. meter uses the induction disk principle, as meters of this type are much simpler and more rugged, have fewer wearing parts, and therefore require less care than the other types do.

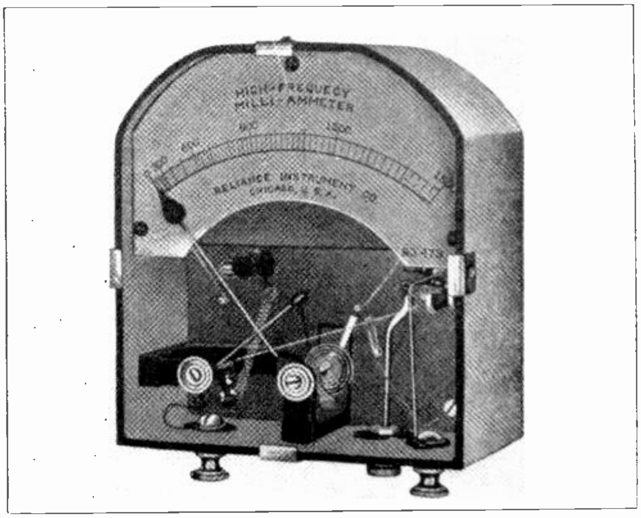

Fig. 62. This view shows the inside parts of a hot-wire meter of slightly different construction than the one illustrated in Fig. 61.

In the induction type watthour meter, both sets of coils are stationary and the rotating element is simply a light-weight aluminum disk mounted on a vertical shaft. There are no commutators or brushes to produce friction or get out of order. Fig. 64 is a photo of a modern A. C. induction watthour meter, and it shows clearly the principal parts of such a meter, with the exception of the gears, dials, and the damping magnets, which are on the other side of the meter.

The two coils of heavy wire on the lower part of the core are the current coils, and the large coil above is the potential coil. Between these coils the rotating disk can be seen.

Fig. 65 shows a diagram of the core, coils, disk, and one damping magnet of a meter of this type, and further illustrates its operating principle.

The potential coil "P" is wound with a great number of turns of very fine wire, and on the upper leg of the soft, laminated-iron core; and the current coils "C" and "C-1" are wound with very few turns of heavy wire, on the two lower core legs.

The large number of turns in the potential coil make this winding highly inductive, and cause the current which flows through it to be nearly 90 degrees lagging, or out of phase with that in the current coils. As the current coils consist of only a very few turns, their circuit has very little inductance, and the current through them will be nearly in phase with the line voltage.

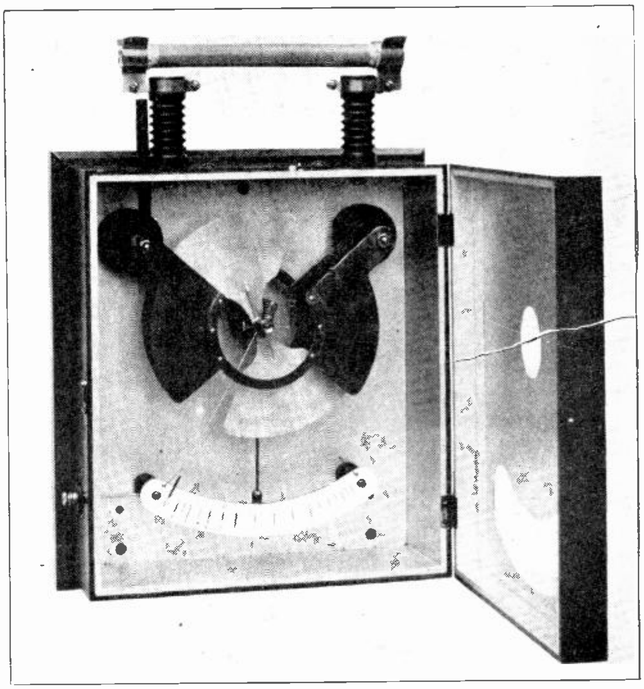

Fig. 63. This photo shows an electro-static voltmeter for measuring the potential of high voltage circuits. The pointer movement is obtained by the attraction between the moving and stationary metal vanes when they are charged with opposite polarity.

The potential coil is connected across the line or across the terminals of a potential transformer. The current coils are connected in series with the line on small power and lighting circuits; or to the secondary of a current transformer on heavy power circuits.

The reversing flux of the current coils alternately leaves one of these poles and enters the other; while the flux of the voltage coil leaves its pole and splits or divides between the two poles at its sides and the two poles of the current coils under the disk.

These two different fluxes which are set up by the out-of-phase currents in the potential and current coils, create a shifting or rotating field effect, which induces eddy currents in the disk; and the reaction between the flux of these eddy currents and the main flux causes the torque and rotation of the disk. This is called the motor element.

One of the damping or "drag" magnets is shown at "D" in Fig. 65. There are two of these magnets, located one on each side of the disk; and when

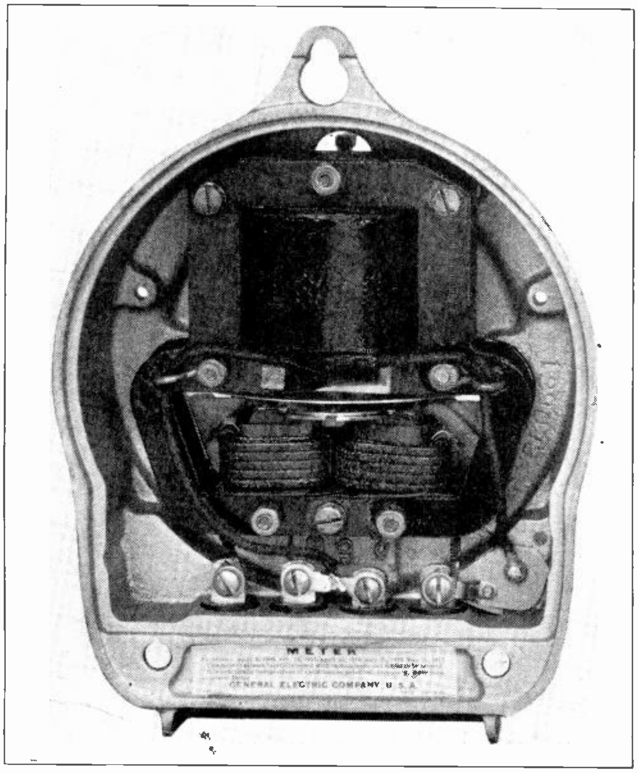

Fig. 64. Interior view of a modern watthour meter, showing the current and potential coils, and the induction disk.

the edge of the disk revolves between the magnet poles, their flux induces in the disk eddy currents which tend to retard its motion. This retarding or damping force will always be proportional to the speed of the disk.

As the current and flux of the potential coil are proportional to the line voltage, and the current and flux of the current coils are proportional to the load current, the torque exerted on the disk by these fluxes will always be proportional to the product of the volts and amperes. This is also proportional to the load in watts on the line.

This force acting against the retarding effect of the damping magnets will cause the meter speed to be proportional to the power used at any time.

The upper end of the shaft on which the disk is mounted is fitted with a worm which drives the first gear of a chain of several gears, which in turn operate the pointers, exactly as described for D. C. watthour meters in Article 102, Section Two, of Direct Current.

A. C. watthour meters are also read in exactly the same manner as explained in Article 103 of Section Two on Direct Current.

72. CREEPING

Sometimes the disk of an A. C. watthour meter will continue to revolve very slowly when the load is all disconnected from its circuit. This is known as **creeping**; and it may be caused by vibration, too high line-voltage, wrong adjustment of the friction compensating device, wrong connection of the potential coil, a short circuit in the current coil; or by a high-resistance ground or short-circuit on the line.

The potential coil of a watthour meter is connected directly across the line; so, as long as there is voltage on the line, there will always be a very small amount of current flowing in this coil whether there is any load on the line or not.

If the meter is over-compensated for friction by the light load adjustment, this may set up enough torque to rotate the disk slowly. Vibration of the meter reduces the friction on its bearings and may be the cause of starting the creeping.

If the line voltage rises above normal, it will increase the amount of current flowing in the potential coil and thereby increase the torque set up by the light-load, friction-compensating device.

The potential coil should be connected across the line between the current coils and the service, as shown in Fig. 65; because, if it is connected on the load side of the current coils, the small current which is always flowing through the potential coils will also flow through the current coils, and may set up enough flux and torque to cause the meter to creep.

If a short-circuit occurs in the current coils, making a closed circuit of one or more turns, the flux of the potential coil will induce a current in these shorted turns. The flux of this secondary current, working on the disk with that of the potential coil, will cause the meter to creep.

High-resistance grounds or short circuits on the line may cause enough current leakage to operate the meter slowly, and yet not enough current to blow a fuse.

Some watthour meters have two small holes drilled on opposite sides of the disk to prevent creeping. The nature of the eddy currents set up around these holes will tend to stop the disk when the holes come between the poles of the magnets.

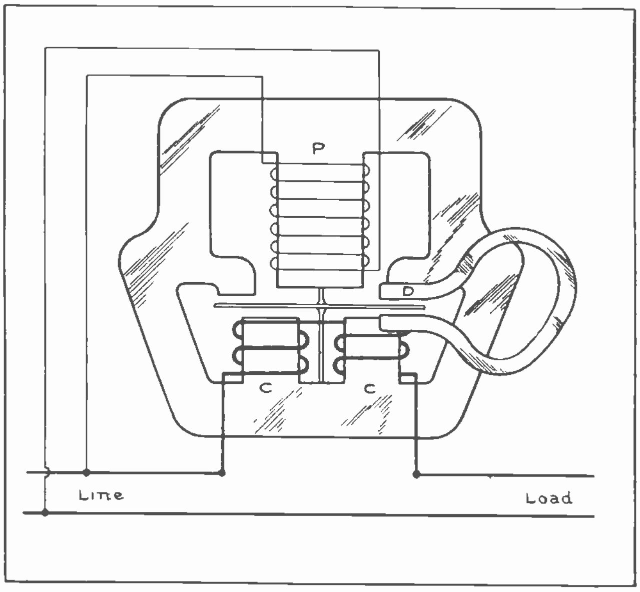

Fig. 65. This diagram illustrates the construction and principles of an induction watthour meter. Note the manner in which the current and potential coils are connected to the line.

73. A. C. WATTHOUR METER ADJUSTMENTS

The light-load adjustment, or friction compensation, on some watthour meters consists of a small coil placed near the current or potential coil and short-circuited so that it will have current induced in it by the flux of the main coil. The current and flux of this auxiliary coil are out of phase with those of the main coils and so they set up a small amount of "split-phase" or shifting flux, which adds just enough to the torque of the disk to compensate for friction at light loads.

In other meters, this adjustment consists of a small plate located between the disk and the poles of the current coil cores, to distort part of their flux and thereby produce a slight shifting flux and torque on the disk. These auxiliary coils or plates are usually adjustable by means of a screw, so that they can be accurately set to provide the right amount of compensation.

Fig. 66. Watthour test meter or rotating standard, used for calibrating watthour meters.

A. C. watthour meters often have another adjustment to compensate for inductive load and lagging current on the line.

On some of the latest type meters this adjustment consists of a copper punching mounted under the meter disk and directly under the pole of the potential coil.

The secondary current induced in this copper plate, or ring, sets up flux of a proper phase relation with the main field to compensate for lagging load currents.

By moving this plate back and forth by means of an adjusting screw, the meter can be adjusted properly for various inductive loads.

The **full-load adjustment** for calibrating watthour meters is made by shifting the damping magnets in or out at the edge of the disk.

If the meter runs too fast, the poles of the permanent magnets are moved farther out on the disk, to produce a greater retarding effect. If the meter runs too slowly, the damping magnets are moved farther in.

On later type meters, the damping magnets are mounted in a brass clamp which is adjustable by means of a screw.

74. TEST METERS AND POLYPHASE WATTHOUR METERS

Fig. 66 shows a portable test meter or rotating standard, used for calibrating and adjusting watthour meters, in the manner explained in the section on D. C. meters. This test instrument is connected to the same circuit or load as the meter under test, and the number of revolutions of its pointer are compared with the revolutions of the meter disk. By this comparison, and careful consideration of the watthour constant on the disk of the meter, we can determine whether the meter under test is operating accurately, or is running too fast or too slowly.

Polyphase watthour meters are also made for measuring the power in kw. hours in a three-phase circuit. These meters have two or three separate elements for measuring the power either by the "two meter" or "three meter" method.

Fig. 67 shows a polyphase induction watthour meter for use on a three-phase, four-wire circuit.

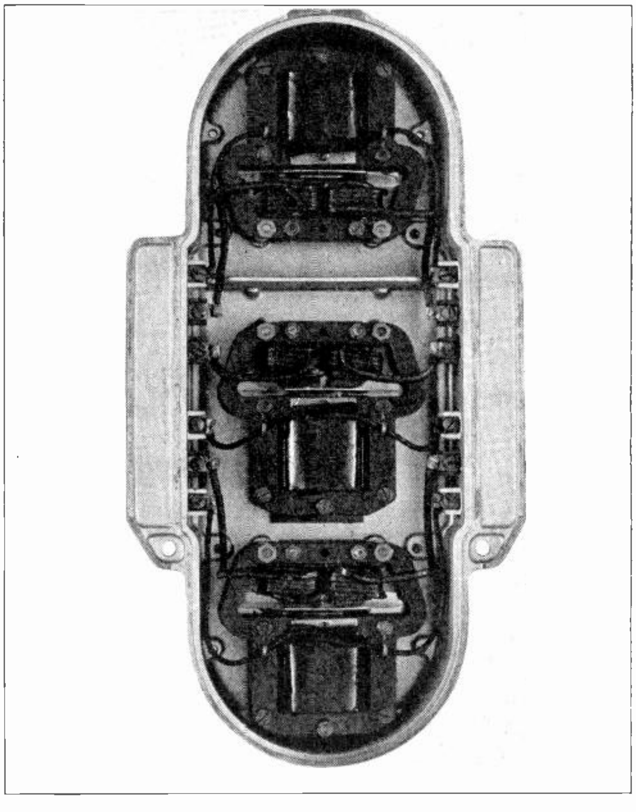

Fig. 67. This photo shows a three-phase watthour meter with three separate meter elements, one of which is connected to each phase.

75. DEMAND INDICATORS

In the section on D. C. meters one type of maximum demand indicator was explained. This type, you will recall, uses the heating effect of the load current to expand the air in a glass tube, and force a liquid over into an index tube to indicate the maximum demand on the system. This same type of demand indicator can also be used on alternating current systems.

In addition to this thermo-type of demand indicator, other A. C. maximum demand indicators are used which are operated either by electro-magnets or the induction disk principle.

One of these is simply a wattmeter element which moves a pointer over a scale a certain distance proportional to the maximum load, and leaves the pointer locked in this position until a higher load advances it farther, or until it is reset by the meter reader. This type is known as an indicating demand meter.

Another type has a marker operated by a magnet so it makes a mark on a moving paper tape each time the watthour meter makes a certain number of revolutions. These are called recording demand indicators.

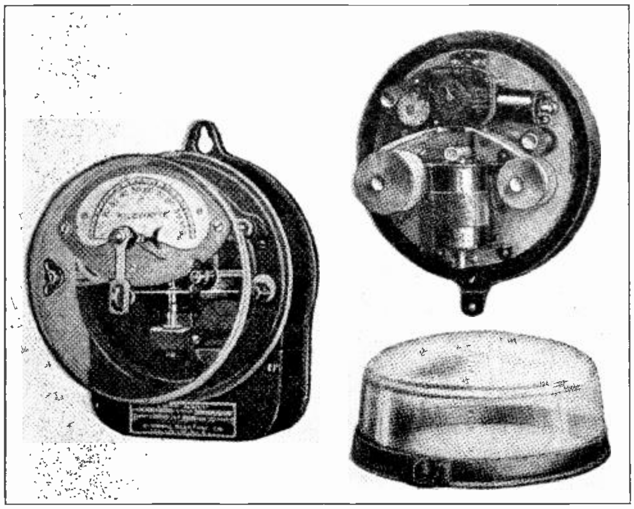

Fig. 68. Two types of maximum demand indicators. The one on the left is of the indicating type, and the one on the right is a recording type meter.

These indicators are used in connection with a watthour meter which is equipped with a contact-making device, so that it closes the circuit to the control magnet coils of the demand indicator every time the watthour meter makes a certain number of revolutions.

On the indicating type of demand meter, the pointer or needle is advanced across the scale a distance proportional to the amount of maximum load during any period that the instrument is energized.

On recording type demand indicators the speed of the tape is constant, so the number of marks for any given time period will vary in frequency and spacing according to the speed of the watthour meter during that period.

These marks, therefore, provide an indication of the maximum amount of power during any period.

Spring wound clocks or electric clocks are often used with demand indicators to control the time element or tape.

Some of the spring type clocks used with these meters, will run from 8 to 40 days with one winding.

Fig. 68 shows an indicating type of maximum demand meter on the left, and one of the recording type at the right. The cover is removed from the instrument at the right, showing the magnet coils and paper tape on which the record is printed.

Recording wattmeters using paper charts and operating on the same general principles as the recording wattmeters explained in the D. C. Meter Section, are also used in A. C. work.

76. POWER-FACTOR METERS

It has previously been mentioned in this section that power-factor meters can be used to read directly the power factor of any A. C. circuit. Power-factor meters are designed to register on their scale the power factor, or the cosine of the angle of lag or lead between the current and voltage of the circuit to which they are attached.

There are a number of different types of power-factor meters. One of the very common types which operates on the electro-dynamometer principle is illustrated in Fig. 69. This instrument has two movable coils, "A" and "B", mounted at right angles to each other on the shaft to which the pointer is attached. Coil "B" is connected in series with a resistance unit, "R", and coil "A" in series with an inductance "S"; then they are connected across the line of which the power factor is to be measured.

The stationary coils, "Z" and "Z-1", are connected in series with each other and then in series with one side of the line. The current through coil "B" will be approximately in phase with the line voltage; while the current through coil "A" will lag nearly 90 degrees behind the voltage, because of the inductance which is connected in series with this coil.

As the stationary coils are connected in series with the load, their current will be in phase with the load current. At unity power factor, the current through the stationary coils will be in phase with the current through the movable coils "B" and "C", and their magnetic fields will be at maximum value at the same time.

The flux of these coils tends to line up or flow through the same axis, and therefore holds coil "B" in its present position with the needle resting at 1.00. or unity power factor.

This is also often called 100 per cent. P.F.

While the power factor is unity, the current and flux of coil "A" will be approximately 90 degrees out of phase with the flux of the stationary coils; therefore, there will be just as much tendency for this coil to try to turn in one direction as in the other, so it doesn't exert any definite torque in

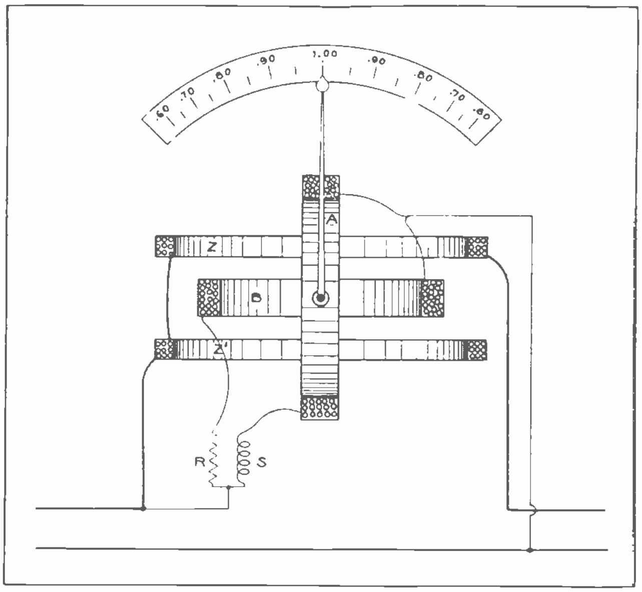

Fig. 69. This diagram shows the important parts and operating principles of a power factor meter.

either direction and allows coil "B" to hold the pointer in an upright position.

If the line current and voltage were approximately 90° out of phase, then the current in coil "A" would be in phase with the current in the stationary coils, and its flux would tend to turn coil "A" until its axis lines up with that of the stationary coils "Z" and "Z-1". It may turn either to the right or left according to whether the current lags or leads the line voltage.

During such a period, when the line current lags the voltage nearly 90°, the flux of coil "B" would be approximately 90° out of phase with the flux of the stationary coils, and it would therefore exert no appreciable torque in either direction.

If the line current and voltage were about 45° out of phase with each other, then the flux of both coils "A" and "B" would tend to line up with the flux of the stationary coils and the needle would assume a position of balance at about 71% power factor.

In this manner, any degree of lag or lead of the line current will cause the two coils to take a corresponding position, dependent upon the angle between the currents in the stationary coils and those in coils "A" and "B".

When the instrument is used as a power-factor indicator, the scale is marked to indicate the cosine of the angle of lag or lead, so that the power factor can be read directly from the scale.

The scale of this meter can also be marked to indicate in degrees the amount of lag or lead in the current, and can then be used to indicate the phase relations between the line voltage and the current.

Fig. 70 shows a switchboard-type power-factor meter. The scales of these instruments are seldom marked lower than 45 or 50 per cent, because it is very seldom that the P.F. is found to be lower than this on any system. You will note that the needle can swing either to the right or left of unity and thereby indicate whether the power factor is lagging or leading.

Meters of this type will operate satisfactorily with voltage variations as much as 25% either below or above normal.

Single-phase power-factor indicators will not give accurate readings if the frequency of the circuit varies more than 2%. For high-voltage or heavy power circuits, current and potential transformers are used with such meters to reduce the voltage and current applied to their windings.

Power plants and large industrial plants which use considerable amounts of alternating current power are usually equipped with power-factor meters, and portable instruments of this type can often be used to make very valuable tests on machines or circuits throughout various plants.

77. FREQUENCY METERS

A frequency meter is an instrument which, when connected across the line the same as voltmeters are connected, will indicate the frequency of the alternating current in that line.

There are many cases where it is necessary to know or maintain the exact frequency of certain circuits or machines, and in such cases a frequency meter is used to conveniently determine the frequency of the circuit.

Power plants supplying A. C. usually regulate the frequency very carefully so that it will stay almost exactly at 60 cycles per second, or whatever the frequency of the generators is intended to be.

There are two types of frequency meters in common use, one known as the **vibrating-reed** type and the other of the **induction** type.

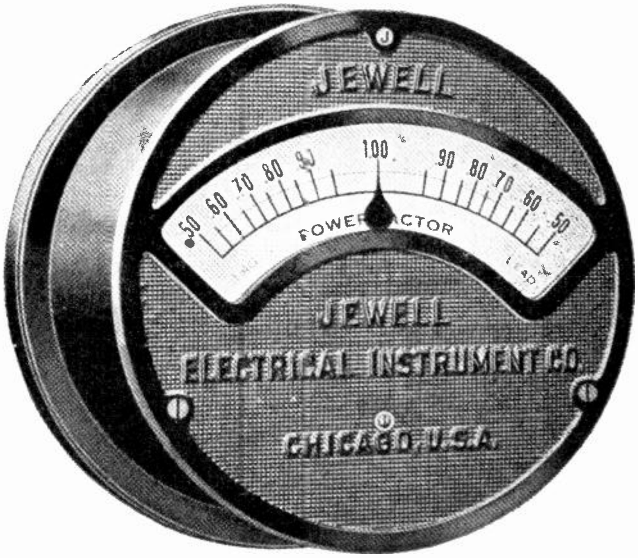

Fig. 70. Switchboard type power factor meter, such as commonly used in power plants and large industrial plants.

78. VIBRATING-REED TYPE INSTRUMENT

A vibrating-reed instrument is a very simple device, consisting principally of an electro-magnet which is excited by the alternating current, and a number of steel reeds which are like thin, flat springs. These reeds are caused to vibrate by the changing strength and reversing flux of the magnet.

Fig. 71 illustrates the principle of this type of frequency meter. The large electro-magnet is wound with a coil of fine wire which is connected in series with the resistor and across the line. When alternating current is passed through this coil, it magnetizes the core first with one polarity and then another.

The polarity is constantly reversing and varying in strength, in synchronism with the frequency of the current. This causes the ends of all the steel reeds to be slightly attracted each time the end of the magnet becomes strongly charged.

These reeds are about ⅛ of an inch wide and approximately 3 inches long, but they each have slightly different natural periods of vibration. In other words, they are somewhat like tuning forks which will vibrate more easily at certain frequencies, depending upon the weight and springiness of the elements.

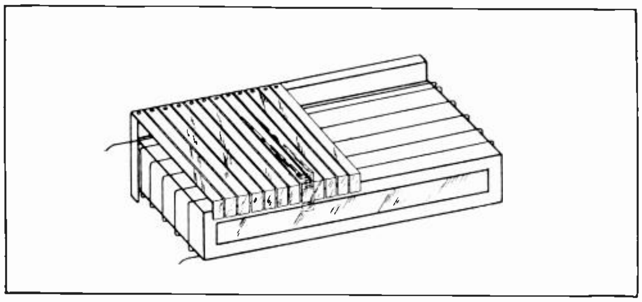

Fig. 71. Diagram of a vibrating-reed type frequency meter. Only part of the reeds are shown in this view. Note the appearance of one reed which is vibrating more than the others.

The reeds of the frequency meter can be made to vibrate at different frequencies either by making them of slightly different thicknesses or by weighting the ends very accurately with small amounts of lead. In this manner they are graduated from one end of the instrument to the other, so that the reeds on one end have a lower rate of vibration, and as they progress toward the other end each one has a slightly higher rate of vibration.

This arrangement will cause one or two of the reeds which have a natural rate of vibration closest to the frequency of the alternating current, to vibrate more than the others do when the magnet coil is energized.

The vibration of most of the reeds will be barely noticeable, because the magnetic impulses do not correspond with their natural frequencies. But the reed which has a natural vibration rate approximately the same as that of the alternating current, will vibrate up and down from ⅛ to ¼ of an inch or more, and perhaps one reed on each side of it will vibrate a little.

The front ends of the reeds are bent downward in short hooks to make them plainly visible and, when viewing them from the front, the end of the reed which is vibrating will appear longer than the others. Then, by reading on the scale directly under this vibrating reed, the frequency can be determined.

Another meter using this same principle, but of slightly different construction, is shown in Fig. 72. This meter has the reeds attached to a bar, "B", that is mounted on a stiff spring, "S", in such a manner that the whole bar with all of the reeds can be vibrated. There is also an iron armature, "A", attached to this bar and projecting out over the reeds beneath the poles of a pair of electro-magnets, "M".

These magnets are excited by the alternating current, the same as the large magnet shown in Fig. 71, and they cause the iron armature to vibrate and rock the bar, thereby causing the reeds to vibrate also.

This vibration of the reeds will be hardly noticeable, except on those that have a natural rate of vibration the same as the speed of the bar movement and the frequency of the alternating current which excites the magnets. These several reeds will vibrate so that their ends will be plainly noticeable, as previously explained.

This type of frequency meter has an adjusting screw for varying the distance between the electro-magnets and the armature "A". By changing this adjustment, the amount of vibration of the reeds can be regulated.

If the circuit to which a meter of this type is connected has a frequency of 60 cycles, the reed directly above the number 60 on the scale will be the one which vibrates the most.

This reed, however, will be moving at the rate of 120 vibrations per second, or once for each alternation of the 60 cycles.

79. INDUCTION-TYPE FREQUENCY METERS

The induction-type frequency meter is more commonly used than the vibrating-reed type. This meter operates on the induction-disk and shaded-pole principle, similar to that which was explained for induction voltmeters and ammeters.

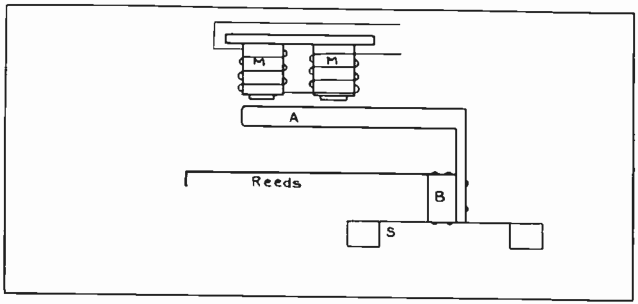

Fig. 72. This sketch shows a side-view of another type of vibrating-reed frequency meter. This instrument uses a pair of small electro-magnets to vibrate the armature to which the reeds are attached.

Fig. 73-A shows a side view of the cores, and disk of an induction-type frequency meter.

Each of the cores, "C" and "C-1", is wound with exciting coils, one of which is connected in series with a resistor "R", and the other in series with an inductance "X".

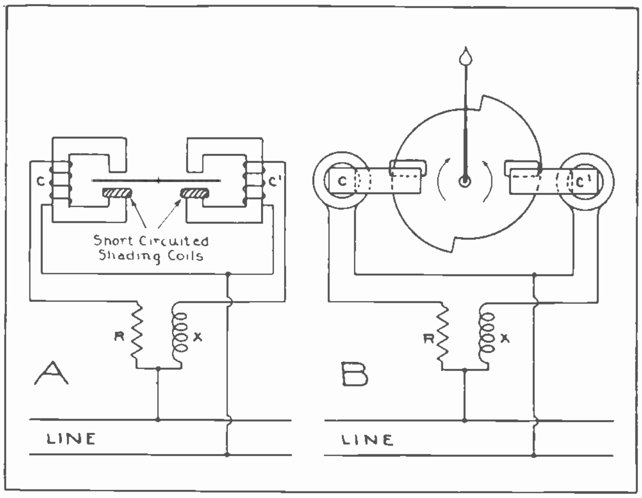

Fig. 73. "A" shows a side-view of an induction type frequency meter. This instrument uses the shaded-pole method of producing torque on the disk by induction. "B". Top view of an induction frequency meter, showing the shape and position of the disk between the poles.

These inductance coils, such as shown at "X", are sometimes called **reactors.** One end or pole of each of the magnet cores is equipped with a shading coil or small, short-circuited coils which are imbedded in one side of the pole faces.

When the coils "C" and "C-1" are excited with alternating current, the flux which is set up in the cores induces secondary currents in the short-circuited shading coils. The flux from these secondary currents in the shading coils reacts with the flux from the main coils and sets up a shifting flux across the edges of the disk.

This induces eddy currents in the disk and tends to set up torque and rotation of the disk. The position of the shading coils and the shape of the disk can be noted in Fig. 73-B.

You will also note in this view that the shading coils are placed on the same side of each magnet, so that they will both tend to exert opposing forces on the disk, each trying to revolve the disk in the opposite direction.

When the instrument is connected to a circuit of normal frequency, or 60 cycles, the current flow through each of the coils "C" and "C-1" will be balanced, and the pointer will remain in a vertical position as shown.

You will recall that the inductive reactance of any coil varies in proportion to the frequency. Therefore, if the frequency of the line increases or decreases, it will vary the amount of current which can pass through the inductance "X" and the coil "C-1".

If the frequency is increased, the inductive reactance of coil "X" will become greater and decrease the current through coil "C-1". This will weaken the torque exerted on the disk by this magnet and allow the disk to rotate a small distance to the right.

If the line frequency is decreased below normal, the inductive reactance of the coil "X" becomes less, allowing more current to flow and strengthen coil "C-1". This will cause the disk to rotate to the left a short distance.

If the disk were perfectly round it would continue to rotate; but it is so shaped that the side under the poles of coil "C" always presents the same amount of surface to the pole, while the side under the poles of coil "C-1" presents a smaller area to the pole as the disk revolves to the left. Therefore, it will turn only a short distance until the increased strength of coil "C-1" is again balanced by the decreased area of the disk under this pole.

The reverse action takes place as the disk rotates to the right, so it will always come to rest at a point corresponding to the frequency of the line to which the meter is connected. The current through coil "C" remains practically constant, because it is in series with the resistor, and the impedance of this non-inductive resistor does not vary with the changes in frequency.

Fig. 74 shows a switchboard-type frequency meter with the needle resting in the normal position, indicating 60 cycles frequency. The scale is graduated to indicate frequencies as low as 50 cycles and as high as 70 cycles per second.

Instruments of this type will operate satisfactorily on voltages either 25% below or above normal. When used on 110-volt circuits, these meters are usually connected directly across the line, the same as a voltmeter.

80. CONNECTIONS OF FREQUENCY METERS

When used on higher voltage, a potential transformer can be used to step the voltage down. In other cases a resistance box may be used in series with the meter so that it can be operated directly from lines as high as 440 volts.

Fig. 74-A shows the connections of a frequency meter of this type, with its resistance and reactance units which are enclosed in one box. There are

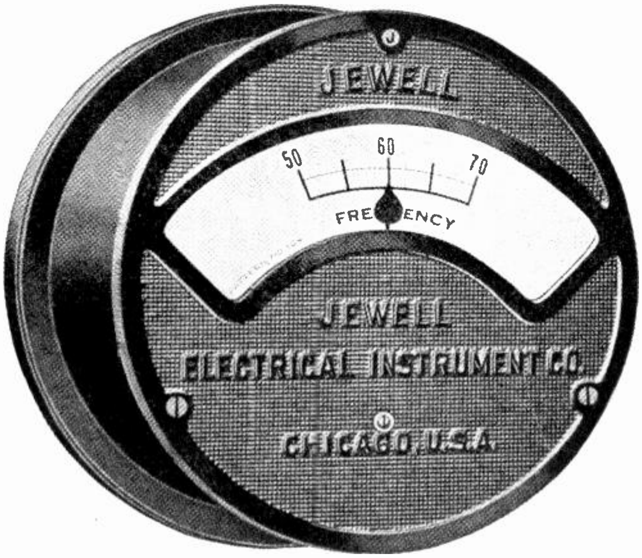

Fig. 74. This photo shows a switchboard type frequency meter, such as commonly used in power plants. The connections to instruments of this type are made to brass terminal bolts which project through the switchboard from the back of the meter.

three terminals on the meter and three on the resistance and reactance unit.

The terminal "R" of the reactance box is connected to the right-hand terminal of the meter, while the terminal "L" from the box connects to the left-hand terminal of the meter. The center terminal of the meter connects to the line wire opposite to that to which the common wire of the reactance box is connected.

Sometimes these meters fail to register properly because of no voltage or very low voltage on the circuit, or because the moving element has become stuck. If the meter reads extremely high, it may be caused by a bent disk, a short-circuit in the resistance coil, or an open circuit in the reactor coil. Testing with a voltmeter will locate either of these faults in the resistance and reactance box.

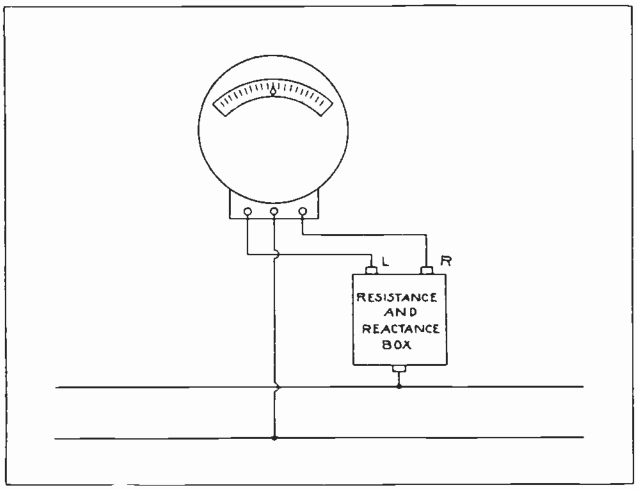

Fig. 74-A. This sketch shows the connections for a frequency meter and the resistance and reactance box which is used with the meter.

If the meter reads too low, it may be due to the moving element having become stuck or to an open circuit in the resistance unit. If the meter reads opposite to what it should, that is, if the needle indicates a lower frequency when you know the frequency is increased, or if it indicates a higher frequency when the line frequency is decreased, then the two outside terminals at the meter or at the reactance box should be reversed.

81. SYNCHROSCOPE

When paralleling A. C. generators, it is necessary to have a device to indicate when the machines are in phase or in step with each other. For this purpose an instrument called a synchroscope is used.

A synchroscope will indicate the phase difference between the running generator and the one which is being brought on to the bus, and will also indicate which machine is running the fastest, so that their speeds can be properly adjusted and the machines brought into perfect step or in phase with each other. This synchronizing is absolutely necessary before paralleling any A. C. generators.

The construction and operation of the ordinary synchroscope is practically the same as that of a single-phase power-factor meter.

Fig. 75 shows the construction and connections of a common type of synchroscope. The operating principle of this type of device is similar to that of a two-pole motor. The stationary coils on the field poles, "O" and "P", are connected to the running generator. The frequency of the current supplied to these coils will therefore be constant.

The movable coils, "A" and "B", are mounted on a shaft or rotor, at right angles to each other. The coil "A" is connected in series with a resistor, and coil "B" in series with a reactor. The two coils, with their resistance and reactance, are then connected in parallel and across one of the phases of the "incoming generator".

The current flowing in coil "B" will be approximately 90° out of phase with that in coil "A", because of lagging effect produced by the reactance coil in series with coil "B". This phase displacement of the currents produces a sort of revolving field around the rotor winding of the movable coils.

Let us assume that, at a certain instant, the current which is being supplied to the stationary field coils by the running generator reaches its maximum value at the same time as the current in the rotor coil "A", which is supplied from the incoming generator.

We shall assume also that at this instant these currents are both of the proper polarity to set up fluxes in the same direction, or from left to right between the field poles "O" and "P", and also from left to right through the center axis of the coil "A". Then these lines of force will tend to join together or line up with each other and cause the rotor to assume the position shown in the diagram.

If the frequency of the two generators remains the same, and if they are in phase, the rotor will remain in this position and the pointer will indicate that the machines are in synchronism.

If the maximum value of the current from the

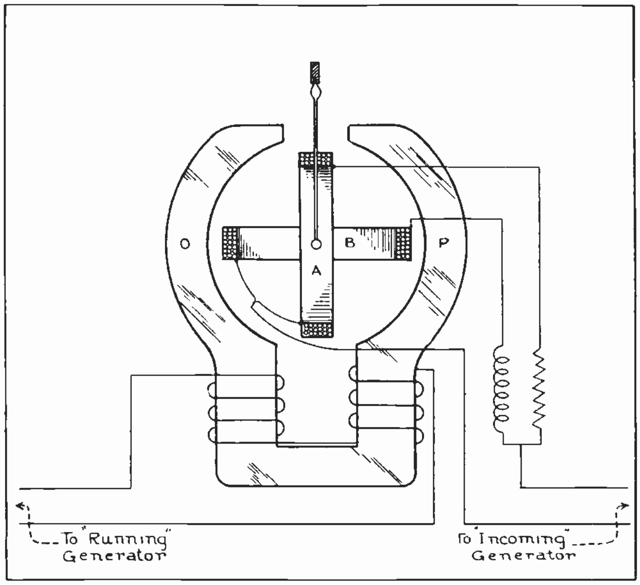

Fig. 75. The above diagram shows the important parts and illustrates the principles of a synchroscope. This diagram also shows the connections of the coils to the "running" and "incoming" generators.

running generators occurs about ¼ of a cycle or 90° later than the maximum value of the current from the incoming generator, then the current in the field poles will be in phase with the current in the rotor coil "B"; because the current through this coil is lagging approximately 90°, due to the inductance in series with it.

When the maximum flux and current occur at the same time at the field poles "O" and "P" and in the movable coil "B", this will cause the flux of coil "B" to line up with that of the field poles, and will cause coil "B" to turn into the position now occupied by coil "A" in the diagram.

If the angle of phase difference between the maximum currents of the two generators becomes still greater, the pointer will move a still greater distance from the point of synchronism.

82. SYNCHROSCOPE SHOWS WHICH MACHINE IS RUNNING TOO FAST

If the incoming generator is operated a little slower and at lower frequency than the running machine, the needle will move to the left; and when the current of the incoming machine drops 360° behind that of the running generator, the pointer will have made one complete revolution to the left

If the incoming machine is rotating faster and producing higher frequency than the running generator, the pointer will revolve to the right, and the faster the pointer revolves, the greater is the difference in speed and frequency between the two machines.

Fig. 76 shows a synchroscope for switchboard mounting. The left side of its scale is marked "slow", and the right side marked "fast", with arrows to show the direction of rotation of the pointer for each condition. These terms marked on the scales of such instruments refer to the incoming machine.

Some types of synchroscopes have an open face or glass cover over the entire front, so that the entire pointer is in full view at all times. In other cases, the pointer moves behind a transparent scale such as shown in Fig. 76. These instruments have a small lamp located behind the scale, so that the pointer can be seen through the scale as it passes across the face of the meter.

This lamp, however, is lighted only when the two generators are nearly in phase with each other. This will be explained in a following paragraph.

Whether the synchroscope uses a lamp or not, it indicates that **the machines are in synchronism only when the pointer comes to rest over the dark spot at the top center of the scale.**

83. SYNCHROSCOPES WITH LAMPS

The diagram in Fig. 75 is for a synchroscope of the type on which the needle revolves in plain view around the open face of the meter, when the generators are operating at different frequencies.

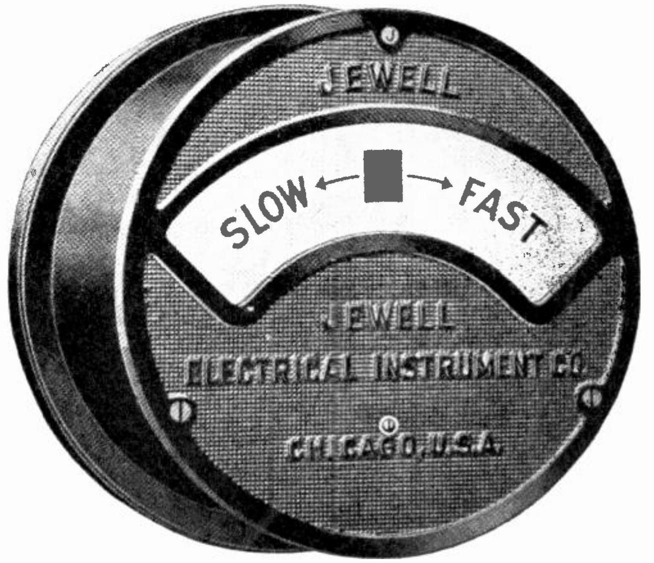

Fig. 76. Switchboard type frequency meter. With this type of instrument the pointer swings back and forth behind a transparent scale when the machines are out of phase.

The pointer of the meter shown in Fig. 76 does not revolve clear around, but only swings back and forth behind the scale when the machines are out of phase. But as the lamp behind the scale and pointer lights up only when the pointer is passing the lamp and dark spot on the scale, the pointer appears to be rotating either to the right or to the left. In this manner, this type of meter also indicates whether the incoming machine is running slower or faster than the running machine

Fig. 77 shows the inside of a synchronscope of this type and Fig. 78 shows the connection of its coils and also the transformer which operates the lamp.

The stationary coils, "C" and "C-1", are connected in series with a resistor and then across the busses of the running machine. The movable coil, "M" is connected in series with a resistor, "R", and a condenser, "X", and then across the busses of the incoming machine.

When the two generators are in phase the movable coil holds the pointer in a vertical position, but when the machines are out of phase the pointer will swing back and forth with a speed proportional to the amount of difference between the generator frequencies.

If the generators are running at the same frequency, but just a few degrees out of phase, the pointer will stand at a point a little to the left or right of the mark on the scale.

The lamp used with these synchroscopes is caused to light up and go out by being connected to the secondary of a small transformer which has two primary coils, one of which is connected to the running machine and the other to the incoming machine.

These primary coils are so wound that, when the machines are in phase opposition, the flux of the two coils joins around the outer core of the transformer, leaving the center leg idle, and the lamp dark.

When the two machines are in phase or nearly so, the fluxes of the two primary coils oppose each other and set up sufficient flux in the center leg of the core to induce a voltage in the secondary coil and light the lamp. Therefore, the lamp will light when the machines are in phase and will go dark when the machines are 180° out of phase.

A. C. generators can also be synchronized with a lamp bank, as will be explained in a later section, but the synchroscope is a more convenient and reliable device and it is practically always used for synchronizing alternators in power plants.

As it is not practical to synchronize and parallel more than one incoming generator at a time, one synchroscope can be used for several generators connected to a large switchboard. The synchroscope is frequently mounted on a hinged bracket or arm at the end of the switchboard so it will stand out where it can be seen by the operator from any point along the board.

In larger power plants a synchroscope with a very large face or dial is used in this manner, so it is plainly visible to operators. More complete instructions on paralleling generators by means of synchroscopes will be given in a later section.

Most synchroscopes have their coils wound for operation on 110-volt circuits, but external resistors can be used with them for connecting the instruments to 220 or 440-volt circuits. When they are used with generators of higher voltages, potential transformers are used to reduce the voltage to the instrument.

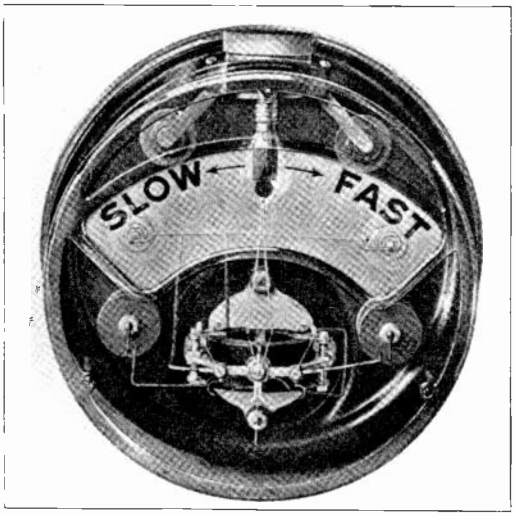

Fig. 77. This view shows the inside of a synchroscope and the arrangement of the various parts, including the lamp and meter coils.

84. INSTALLATION AND CONNECTIONS OF SYNCHROSCOPES

When installing and connecting a synchroscope, care should be taken to see that the proper terminals of the resistor and reactor are connected to the similarly marked terminals on the instrument. It is very easy to make mistakes in these connections, if they are not very carefully made.

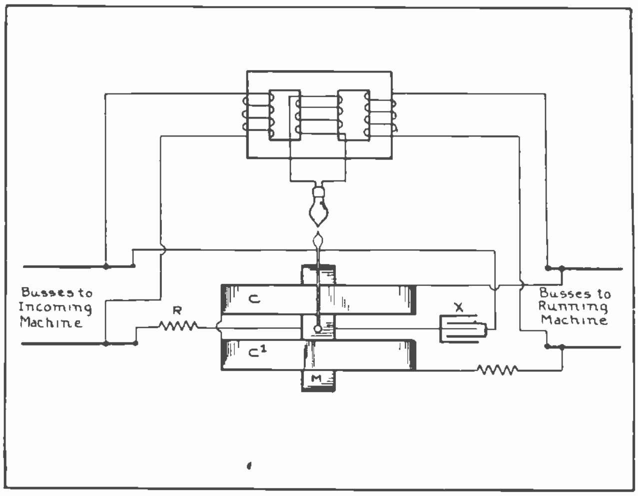

Fig. 78. This diagram shows the important parts and connections of a synchroscope similar to the one shown in Figs. 76 and 77.

The synchroscope, when shipped from the factory, has usually been tested and is packed in good condition. Therefore, if it doesn't operate correctly after it has been installed and connected, the fault is probably not in the meter, and the external wiring should then be checked over very carefully.

If the meter develops no torque, the trouble may be in the connections from the incoming generator. In this case the circuits through the resistor and reactor should be tested for opens, and the circuits through the meter should also be tested.

If the meter rotates but develops very little torque, the trouble may be in the connections from the running generator and its voltage and connections should be checked. A pair of test lamps can be used to determine whether the synchroscope is operating properly or not. If the lamps are connected to burn brightly when the two machines are in synchronism, and the synchroscope doesn't indicate synchronism at the same time the lamps do, the cause is probably wrong external connections, or the pointer may be displaced on the shaft.

Disconnect the meter from the generator busses and connect both elements to a single-phase circuit of the proper voltage. If the pointer now stands in vertical position, the meter is correct and the external connections must be checked.

If the instrument indicates synchronism when the two generators are 180° out of phase according to the lamp test, then reverse the two leads from the running generator. If the synchroscope rotates slowly when the generators are operating at widely different speeds and rotates rapidly when the generators are operating at nearly the same speed, the incoming generator may be connected to the running machine terminals.

The foregoing material on various types of A. C. meters, of course, does not cover every meter made, but does cover the more common types and the general principles on which they operate.

A good understanding of these principles and the applications of the various meters explained will be of great value to you in most any branch of electrical work, and will be very helpful in choosing proper meters and installing and testing them on various jobs.

Always remember when handling or working with electric meters of any kind, that they are usually very delicate in construction and should never be bumped or banged around Even slight jars may damage the jeweled bearings, shaft points, or some part of the moving element.

Connecting instruments to circuits of too high voltage or too heavy current for the range of the meter, will often bend the pointer or damage the moving element, and possibly burn out the coils.

Always try to appreciate the great convenience and value of electric meters for measuring the values of electric circuits, and handle these instruments intelligently and carefully on the job.

Intelligent selection of the proper meters for new electrical installations, or for old ones that do not have proper or sufficient meters, may often result in a promotion for you.

So give this subject proper consideration, and always handle any meters you may have to work with, in a manner that will be a credit to yourself and your training.

COYNE
Electrical School
CHICAGO ~ ~ ILLINOIS

ESTABLISHED 1899

ALTERNATING CURRENT
AND
A. C. POWER MACHINES

Section Three

A. C. Generators
Types, Construction Features, Cooling
Field Excitation, Exciter Generators and Connections
Alternator Voltage Control, Automatic Regulators
Operation and Paralleling
Phasing Out and Synchronizing
Starting Alternators, Adjusting Load
Shutting Down

ALTERNATING CURRENT GENERATORS

As most of the electrical power generated is alternating current, the operation and care of A. C. generators, or **alternators** as they are commonly called, is a very important subject. This section will deal principally with the common types of alternators; their construction, operation, and care.

The windings used in alternators and the principles by which they generate alternating voltage have been covered in the sections on Armature Winding and in Alternating Current, Section One.

Alternators are made in sizes ranging from the small belt-driven or engine-driven types of from 1 to 50 kv-a. up to the mammoth turbine-driven units of over 200,000 kv-a.

Alternators can be divided into the following classes: (A) Revolving armature or revolving field types: (B) Vertical or horizontal types; (C) Turbine or engine types.

85. REVOLVING FIELD ALTERNATORS

Practically all A. C. generators of over 50 kv-a. capacity are of the revolving-field type, because this type of construction permits the generation of much higher voltages in the stationary armature windings, and also because it eliminates the necessity of taking high-voltage energy from a revolving member through sliding contacts. This greatly simplifies the construction of the machine and reduces insulation difficulties.

Revolving-field alternators are commonly made to generate voltages as high as 13,200, and some are in operation producing voltages of 22,000 direct from their armature windings. Alternators can now be constructed to produce voltages as high as 36,000. The generation of such high voltages makes possible very economical transmission of this energy, and also reduces the necessary winding ratio of transformers when the voltage is to be stepped up still higher for long distance transmission.

At the left in Fig. 79 is shown the stator, or stationary armature, of an alternator. The rotor, or revolving field, which has been removed from the stator, is shown at the right. Note the stator coils or windings which are practically the same for alternators as for A. C. induction motors.

These windings were thoroughly described, both as to construction and connections, under Three-Phase Stator Windings in the Armature Winding Section.

Note also the construction of the revolving field element and the manner in which the poles are mounted on the spider. The collector rings, through which the low-voltage direct current is passed to the field coils, can be seen at the end of the rotor.

Some of the smaller A. C. generators have revolving armatures which are wound very similarly to those for D. C. generators, and have connections brought out to slip rings so the generated energy can be transferred from the revolving armature to the line by means of these slip rings and brushes.

However, many of the smaller alternators are also built with revolving fields. Fig. 80 shows a belt-driven alternator of 125 kv-a. capacity, with a revolving field and stationary armature. This generator is driven at 900 R.P.M. and produces three-phase, sixty-cycle energy at 2300 volts. Note the three leads which are brought out from the stator and are permanently connected to the switchboard or line when the machine is installed. In this manner the load current flows directly from the stationary armature to the line without any slip rings or sliding connections in the circuit. Note the D. C. exciter-generator which is attached directly to the end of the shaft of this alternator.

Fig. 81 shows the revolving field for a small alternator of the type shown in Fig. 80. Note carefully the construction of the field poles on this rotor, and also the slip rings and D. C. exciter-armature on the end of the shaft.

The direct current energy required to excite the field of an A. C. generator is very small in comparison with the A. C. output of the machine. This energy for excitation varies from three-fourths of one per cent. to two and a half per cent. of the total capacity of the alternator.

It is easy to see, therefore, that the revolving field will require much smaller and lighter conductors than a revolving armature would; and also that the handling of this smaller amount of energy through

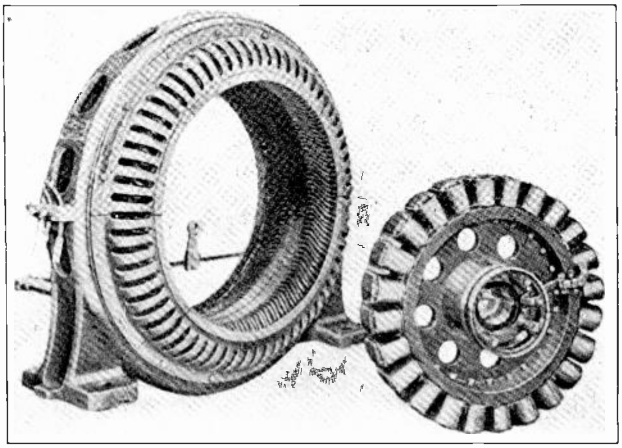

Fig. 79. Above are shown the complete stator of an A. C. generator on the left and the revolving field or rotor on the right. The field coils on the rotor are excited with direct current and revolved within the stator to generate alternating current in its windings.

brushes and slip rings at low voltage, is a much simpler proposition than to handle the total load current of the machine at the high voltages used on modern alternators.

Keep in mind that it makes no difference in the nature or amount of voltage generated by the machine whether the field poles revolve past the stationary armature conductors or the armature conductors revolve past the stationary field poles. As long as the same field strength and speed of motion are maintained, the cutting of the lines of force across the conductors will in either case produce the same voltage and the same frequency.

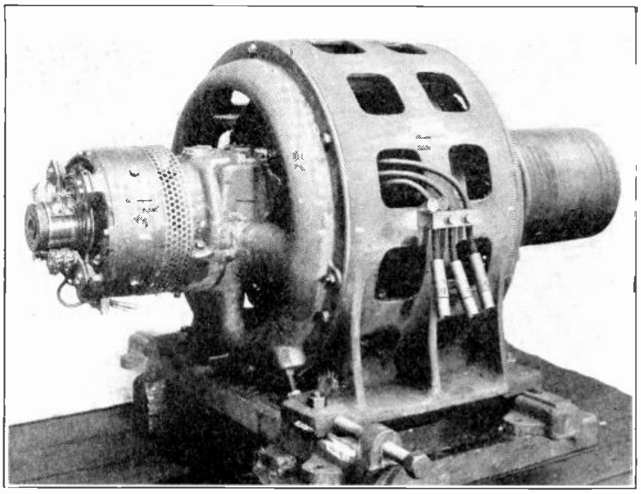

Fig. 80. This photo shows a 125 kv-a. alternator of the horizontal belt-driven type. Note the D. C. exciter-generator which is direct connected to the left end of the shaft. (Photo Courtesy Allis Chalmers Mfg. Co.)

86. VERTICAL TYPE AND HORIZONTAL TYPE ALTERNATORS

The terms vertical and horizontal as applied to A. C. generators refer to the position of the shaft. Belt-driven alternators, or generators that are connected directly to steam engines, are usually of the horizontal-shaft type. The generator shown in Fig. 80 is of the horizontal type.

Large steam-turbine-driven generators are also more commonly made in the horizontal types, although some of these are in operation which have vertical shafts.

Water-wheel generators are more commonly made in the vertical type, as this construction allows the generator to be placed on an upper floor, with the water-wheel on a lower level and attached to the generator by means of a vertical shaft.

This reduces the danger of moisture coming in contact with the generator windings due to any possible leakage or dampness around the water-wheel.

Fig. 82 shows a large, vertical type, water-wheel-driven generator. This machine has a capacity of 18,750 kv-a. and produces 60-cycle alternating current at 6600 volts. Machines of this type usually operate at quite low speeds, this particular one having a normal speed of 112½ R.P.M.

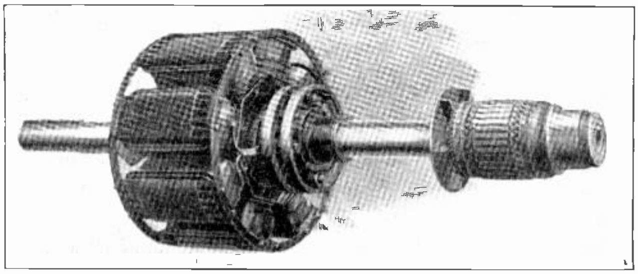

Fig. 81. This view shows the construction of the rotor or revolving field of an alternator similar to the one shown in Fig. 80. Examine its construction carefully and note the position of the collector rings and exciter-armature on the shaft.

Note the D. C. exciter-generator mounted on top of the shaft above the thrust bearing and main support members of the generator frame. The water-wheel attaches to this generator at the coupling which is shown on the lower end of the shaft.

Horizontal-type generators usually present a much simpler bearing problem, as the horizontal shaft lies in simple sleeve-bearings which support the weight of the revolving field at each end of the shaft.

Vertical-type generators require special thrust-bearings to support the weight of the shaft and rotor, and also a set of guide bearings to keep the rotor in proper alignment within the stator core.

Vertical-type machines require less floor space, which is one advantage in their favor where the power plant must be as small as possible.

87. TURBINE TYPE AND ENGINE TYPE ALTERNATORS

The terms "turbine" and "engine" type as applied to alternators refer to the type of prime mover by which the alternator is driven. As there is considerable difference between the speeds of ordinary reciprocating steam engines and those of steam tur-

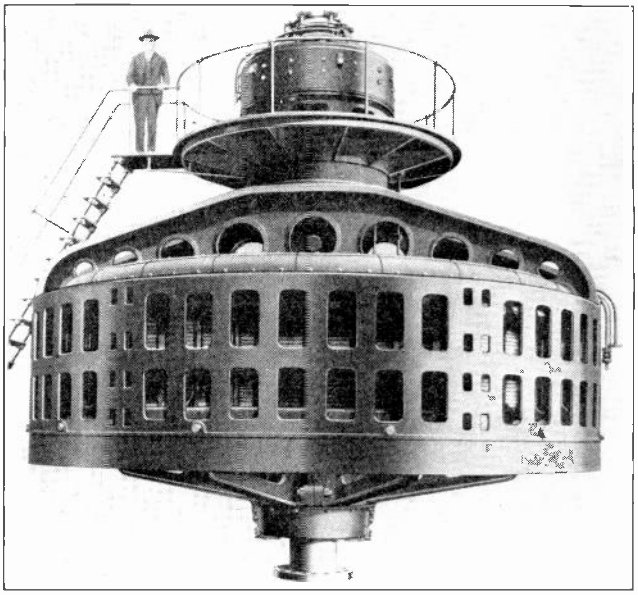

Fig. 82. Large vertical type alternator for water-wheel drive. The stator core and windings of this machine lay in a horizontal position just inside the lower frame work, and the field poles revolve on the vertical shaft within the stator. (Photo Courtesy Allis Chalmers Mfg. Co.)

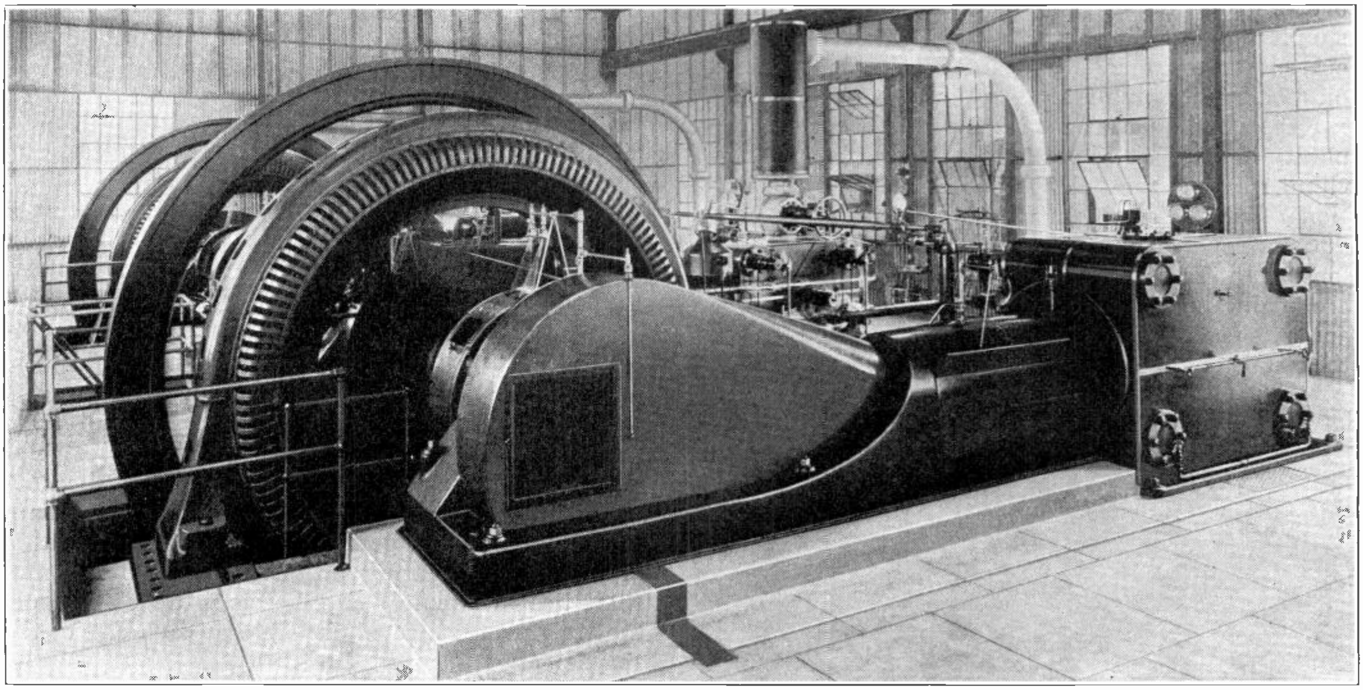

Fig. 83. This photo shows a view in a power plant equipped with horizontal type steam-engine-driven alternators. These alternators are made with large diameters because of the relatively low speed at which they are driven. (Photo Courtesy Allis Chalmers Mfg. Co.)

bines, the generators designed for engine drive are of considerably different shape and construction than those designed for high-speed turbine drive.

Engine-driven alternators are usually of quite large diameter and narrow in width from one side to the other of the stator core. The rotors for these machines usually have a rather large number of field poles, in order to obtain the proper frequency at their low operating speeds.

Fig. 83 shows a horizontal-type engine-driven alternator of 1000 kv-a. capacity, and gives a good general idea of the shape and construction of these machines. Note the large fly-wheel used in connection with such alternators to maintain a perfectly even speed in spite of the pulsations delivered by the piston of the engine.

Steam-turbine-driven generators, or turbo-alternators as they are commonly called, are usually made with much smaller diameters and greater in length than the engine-type generators are. The very high speeds at which steam turbines operate makes necessary the small diameter of the revolving field of the generator, in order to reduce centrifugal stresses.

These higher operating speeds also make possible the generation of ordinary 60-cycle energy with a very small number of field poles.

Turbine-driven generators are commonly made with two or four poles on the revolving field. Fig. 84 shows a large steam-turbine-driven alternator of 50,000 kw. or 62,,500 kv-a. capacity. The generator is on the left in this view and the steam turbine on the right. The two are directly connected together on the same shaft.

This alternator is completely enclosed in an air-tight casing to keep out all dirt and moisture from its windings, and to allow cooling by forced air circulation within this casing.

88. CONSTRUCTION OF ALTERNATORS. ARMATURES

Regardless of the type or construction of the alternator, the two principal parts to be considered are the armature and the field. The main winding, whether it is placed on the rotor or in the stator, is usually referred to as the armature; and, as previously mentioned, these armature windings for ordinary A. C. generators are practically the same as those for the stators of induction motors. In fact, the same winding can be used for either a motor or generator, if the squirrel cage is exchanged for a revolving field with the proper number of poles, or vice versa.

On large machines there are enormous magnetic stresses set up between the conductors of the winding when the generators are heavily loaded or during times of sudden surges due to overloads or short-circuits. For this reason, it is necessary to securely anchor or brace the coils, not only by slot wedges but also by using at the coil ends, special supports which are rigidly connected to the stator frame.

The coils are securely tied or wrapped to these braces or supports and in some cases are mechanically clamped down on the supports to prevent distortion or warping of the coils due to magnetic stresses set up by the flux around them.

The view on the left in Fig. 85 shows the frame of a turbine-driven alternator with one of the first stator punchings or core laminations in place. This view shows the manner in which these core laminations are fitted in the stator frame and held in place by the dovetail notches in the frame.

When the complete core is assembled, the laminations are also held more firmly together by the use of clamping rings and bolts which apply pressure at the ends of the stator core.

The view at the right in Fig. 85 shows the same stator with the core completely assembled and the windings in place. Note the heavy connections which are made between the phases and coils of the winding and also the manner in which these connections are rigidly secured to the end of the stator core.

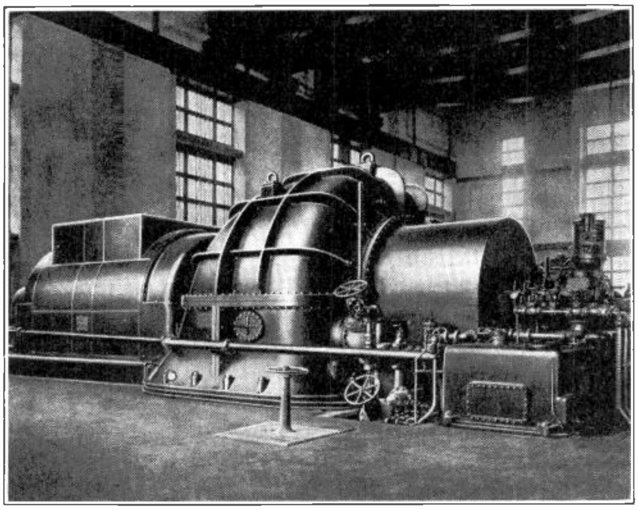

Fig. 84. Large steam-turbine-driven alternator. The turbine with its control mechanism is on the right. The alternator is enclosed in the air-tight casing at the left. This unit is typical of many hundreds of great steam-driven generators in use in modern power plants throughout this country. (Photo Courtesy General Electric Co.)

Fig. 86 shows an excellent view of the end of the winding in a large turbine-driven generator, and shows clearly the method of bracing and tying the coils in place. Note the comparatively small diameter and great length of the stator openings on the machine shown in Figs. 85 and 86.

The armature coils on large alternators are usually made of heavy copper bars and consist of only a few turns to each coil. These coils are heavily insulated according to the voltage of the machine, and are securely wedged into the slots.

Spaces or air ducts are left at intervals throughout the stator when the laminations are assembled, to allow free circulation of the cooling air throughout the windings.

89. FIELD CONSTRUCTION

The field of an A. C. generator is constructed very much the same as the field of a D. C. generator, except that the field of an alternator is usually the revolving element. Low-speed alternators of the large diameter engine-driven types usually have the field poles mounted on a spider or wheel-like construction of the rotor, as shown in Fig. 79.

Fig. 81 also shows the mounting of the field poles on a smaller rotor of the solid type which is used for a small diameter, medium-speed alternator.

The poles consist of a group of laminations tightly clamped together and equipped with a pole-shoe, or face, of soft iron. They are attached to the rotor core or spider, either by means of dovetail ends and slots or by means of bolts.

Fig. 87 shows several views of field poles of the dovetail type. These views also show the pole shoes and the rivets which hold the laminations together. The coils for field poles of this type may be wound with either round or square wire, or thin, flat, copper ribbon of the type shown in Fig. 88.

Field poles and coils of this type are sometimes called "spool wound", because of the shape of the poles and the manner in which the coils are wound on them.

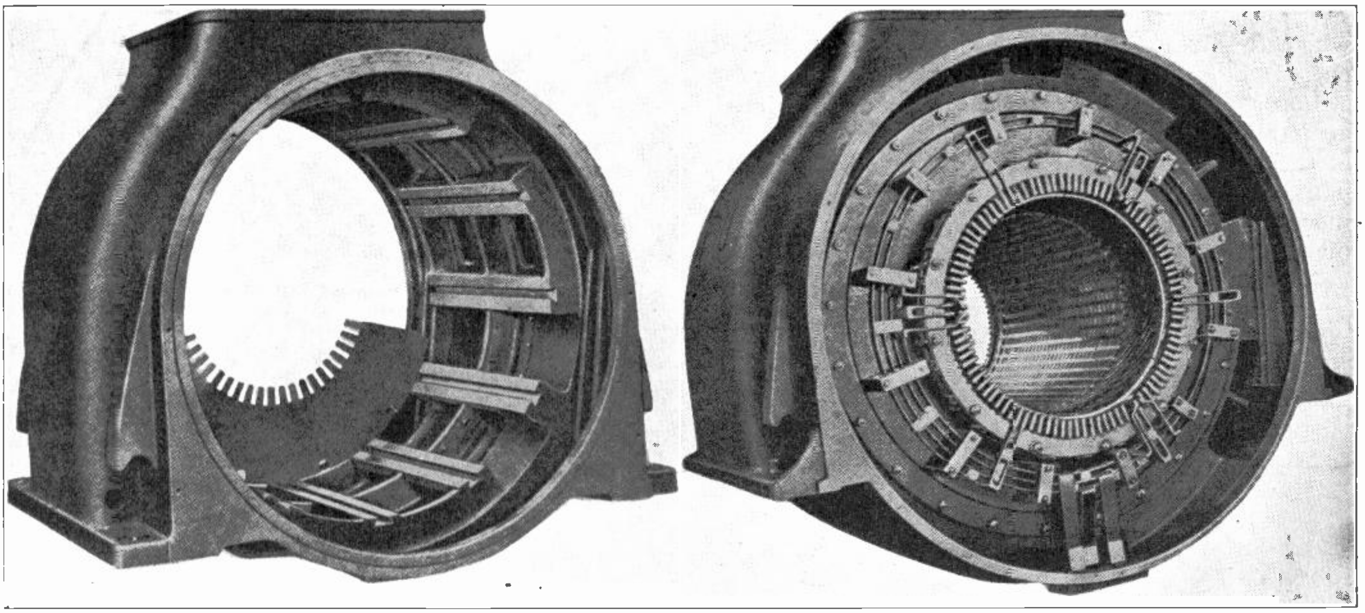

Fig. 85. The above two views show very clearly the method of construction of the stator core and windings of high speed steam-turbine-driven alternators.

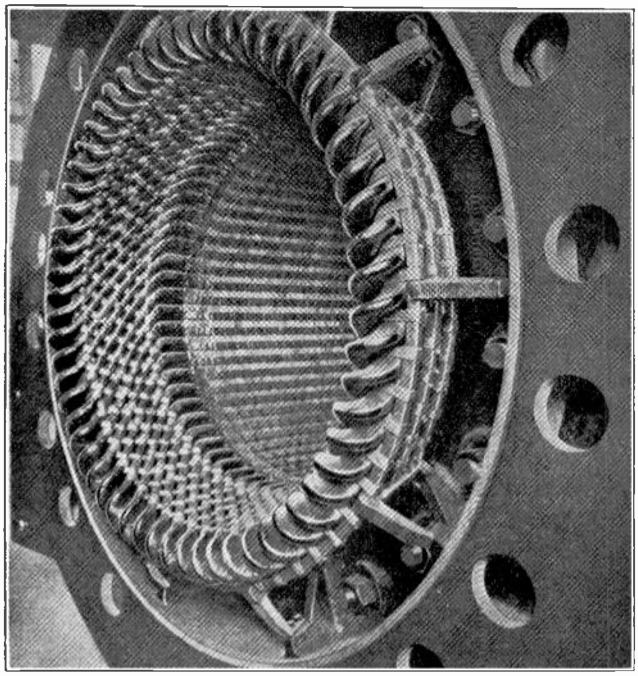

Fig. 86. This photo shows the end of a stator winding for a high speed turbo-alternator. Note the rigid bracing of the coil ends.

The field coils are connected either in series or in series-parallel groups, according to the size of the machine and the exciter voltage which is applied. They are always connected to give alternate north and south poles around the entire field. Alternator fields always have an even number of poles.

On high-speed turbine-driven alternators which have long rotors of narrow diameter it would be very difficult to construct field poles of the "spool wound" type, and also extremely difficult to hold the coils in place because of the great centrifugal force at these high speeds. For such machines the field coils are usually wound in the slots cut in the surface of a long, solid field rotor or core.

Fig. 89 shows a two-pole rotor of this type, in which the field coils can be plainly seen at the left end of the slots. These coils are also wound with strap or bar copper. When the rotor is completed, a metal casing or sleeve is placed over both ends of the coils as shown at the right end of this rotor. This sleeve protects the coils from damage or mechanical injury and also holds them securely in place and prevents them from being thrown or bent outward by the high centrifugal force exerted upon them during operation.

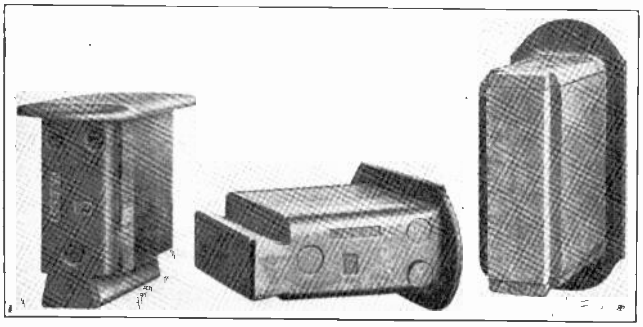

Fig. 87. Several views of laminated field poles such as commonly used in revolving field alternators.

Fig. 90 shows a closer view of the end of a rotor of this type, on which the slip rings and ventilating blades can be clearly seen. This type of rotor construction provides a very rugged field element and very secure mounting of the coils and is, therefore, ideally suited to the very high speeds at which steam-turbine alternators are operated.

90. COOLING OF GENERATORS

All electrical equipment produces a certain amount of heat in proportion to the losses which take place within the windings. Large A. C. generators produce considerable heat, even though their efficiencies often approach 98%. In the enormous sizes in which generators are built today the cooling of these machines becomes a serious problem.

The heat must be removed or carried away from the windings as rapidly as it is created or the windings would soon overheat to a point where the insulation would be damaged. As the resistance of copper conductors increases with any increase in temperature, the efficiency of the machine would also be reduced by allowing it to operate at temperatures higher than normal.

Natural air circulation is not sufficient for effective cooling of the windings of these large machines, as it is with smaller D. C. and A. C. generators. Therefore, it is necessary to use one of the several forms of artificial cooling or forced ventilation.

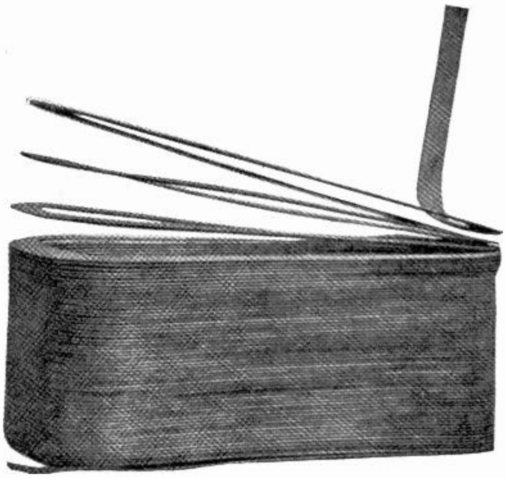

Fig. 88. Field coil which is wound with thin copper strip, making a coil which is very compact and easily cooled.

One very common method of cooling is to completely enclose the generator in a housing, such as shown on the machine in Fig. 84, and force a blast of air under low pressure through this housing and the machine windings. The air used for this purpose is first washed with a spray of water to cool it and clean it of all dust and dirt, and then the air is dried before being passed through the generator windings.

This clean air is then kept dry and is recirculated through the generator over and over again, being

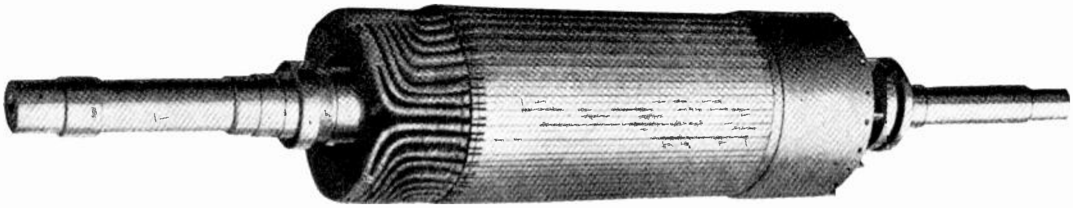

Fig. 89. This photo gives an excellent view of a high speed field rotor such as commonly used in turbine-driven alternators. Note how the field coils are placed in slots in the solid rotor so that when they are excited with D.C. they will create two field poles on opposite sides of the rotor. (Photo Courtesy Allis Chalmers Mfg. Co.)

cooled each time it leaves the machine, by being passed over a set of cold water pipes.

It is of the greatest importance that this ventilating air be kept circulating constantly through large alternators during every moment of their operation, and also that the air be kept clean and dry.

Some other gases are more efficient than air for carrying off the heat from machine windings. Hydrogen gas is being successfully used for this purpose. Because of its efficiency in absorbing heat from the windings and transferring it to the cooling pipes through which the gas is circulated outside of the generator, the use of hydrogen in this manner makes possible increased efficiencies and reduced sizes of alternating current machines.

Hydrogen being an explosive gas, it is necessary to eliminate all possibility of its becoming ignited around the generator; otherwise an explosion and serious damage would result.

Large alternators are usually equipped with thermometers or electrical temperature indicators to show the temperature of their armature windings at all times during operation. Many large high-speed alternators have water-cooled bearings, with water circulating through passages in the metal around the bearings, to carry away the heat.

91. ALTERNATOR FIELD EXCITATION

The field of an alternating current generator is always excited or energized with direct current and in this manner constant polarity is maintained at each pole. As alternators do not produce any direct current themselves, they cannot be self-exciting, as many D. C. generators are.

The direct current for excitation of alternator fields is produced by a separate D. C. generator, known as the **exciter generator.** The exciter machine may be belt-driven from a pulley placed on the shaft of the main alternator, or it may be directly connected and driven by the end of the alternator shaft as on the machines in Figs. 80 and 82.

In some cases in large power plants the exciters are driven by separate prime movers. Sometimes one large exciter-generator is used to furnish direct-current field energy for several alternators, each of which obtains its field current from the exciter bus.

In other cases, there may be a number of exciter-generators which are all operated in parallel to supply the exciter bus with direct current; and any or all of the alternators can obtain their field current from this bus.

Exciter-generators are usually of the compound type and of a voltage ranging from 110 to 250 volts. It is not necessary to use high voltage for field excitation, as this current is only used to produce magnetic flux, the strength of which is determined by the number of ampere turns on the field poles.

The direct current from the exciter generator or busses is conducted to the revolving field poles of the alternator through brushes and slip rings, as previously explained. These slip rings can be plainly seen on the revolving field units shown in Figs. 81 and 89.

92. CONNECTIONS OF EXCITER AND ALTERNATOR FIELD CIRCUIT

Fig. 91 shows the connection diagram and circuit of an exciter-generator connected to a three-phase alternator. This alternator has four poles on its revolving field and in this case all of the poles are connected in series.

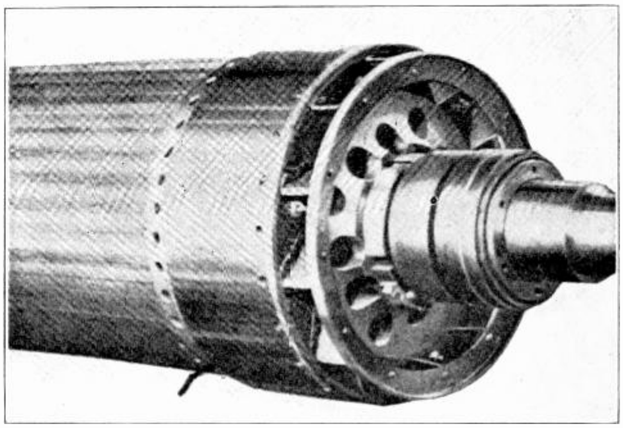

Fig. 90. End-view of high speed field rotor showing shield ring over the coil ends and also showing ventilating plates and slip rings.

The stator winding is of the ordinary type which has been previously described in the section on A. C. Armature Windings, and in this diagram it is simply shown as a continuous winding around the stator, having three line leads which are connected to points 120 degrees apart around the winding.

When the field of this alternator is excited with direct current and the poles revolved so their flux cuts across the conductors of the stator winding, three-phase alternating current will be generated and supplied to the line or busses.

If this four-pole machine has its field revolving at 1800 R.P.M., the frequency of the generated A. C. will be 60 cycles per second, according to the formula given in Article 4 of A. C. Section One.

The exciter shown in this figure is a compound-wound D. C. generator and has its voltage controlled by means of a shunt-field rheostat, R. The exciter voltage can be controlled either by manual operation of the field rheostat or by an automatic voltage regulator in connection with the field rheostat. This regulator will be explained in later paragraphs and in this figure we shall consider the rheostat to be manually operated.

A voltmeter and ammeter are shown connected to the exciter circuit between the D. C. generator and the field discharge switch, S, of the alternator. They are connected at this point because it is desirable to know the exciter voltage before the field switch is closed, and also because of the high voltages which may be induced in the alternator field if the field discharge switch should accidently be opened while the alternator is operating in parallel with others.

The ammeter indicates the amount of field current which is being supplied to the alternator at any time, and furnishes an indication of the field strength and normal or unusual operating conditions in the alternator.

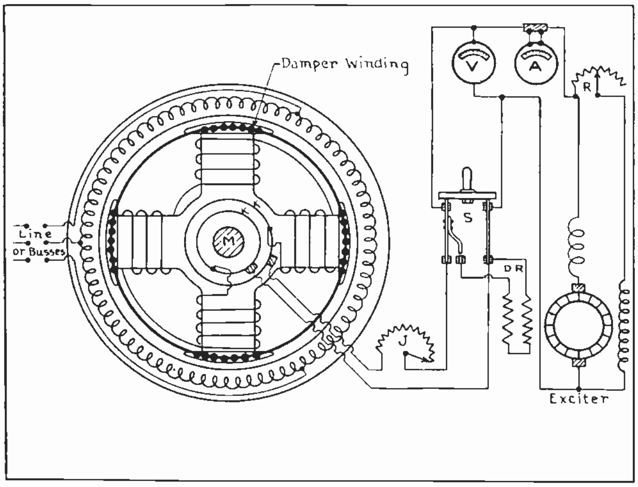

Fig. 91. This diagram shows the connections of the stator and rotor of a three-phase alternator with the exciter-generator, rheostats, meters, and field discharge switch.

93. FIELD DISCHARGE SWITCH

The field discharge switch is a special type of switch which has a third or auxiliary blade attached to one of the main blades and is arranged to make contact with an extra clip just before the main blades of the switch are opened, and also during the time that this switch is left open.

This places the field discharge resistance, D. R., across the collector rings and field winding of the alternator when its circuit to the exciter is open. The purpose of this discharge resistance is to prevent the induction of very high voltages in the field winding when its circuit is interrupted and the flux allowed to collapse across the large number of turns of the field winding.

Placing this resistance across the field winding allows the induced voltage to maintain a current through this closed circuit for a short period after the switch is open. This uses up the self-induced voltage and magnetic energy of the field, and allows the current to die down somewhat gradually.

If the flux of the alternator field were allowed to collapse suddenly by completely opening the circuit, the induced voltage might be sufficiently high to puncture the insulation of the field windings and cause short-circuits or grounds between the winding and the core.

94. EXCITER AND ALTERNATOR RHEOSTATS

Between the field discharge switch and the slip rings is an alternator field rheostat, "J". This rheostat is used to obtain very fine and accurate adjustment of the alternator voltage, and its resistance is usually so proportioned that its full range of voltage operation is just equal to the change in voltage obtained by moving the arm of the exciter rheostat one point.

It is easy to see that the voltage of the main alternator can also be conveniently controlled by adjusting the voltage of the exciter generator. As the exciter voltage is varied, more or less current will be forced through the field winding. By the proper use of both the exciter field rheostat, R, and the alternator field rheostat, J, a wide range of voltage adjustment in very small steps can be obtained on the alternator.

For example, suppose that the exciter shunt field rheostat has 10 points, which will make it possible to obtain 10 voltage changes on both the exciter output and the alternator output. If the alternator field rheostat has 20 points, we can obtain 20 steps or variations in the alternator voltage between each two adjacent points of the ten-point exciter rheostat.

With this combination it is therefore possible to obtain 200 voltage variations, which will permit very accurate voltage adjustment of the alternator.

95. FACTORS GOVERNING VOLTAGE AND FREQUENCY OF ALTERNATORS

From the alternator field rheostat we follow the exciter circuit to the brushes which rest on the slip rings, K-K. The slip rings are mounted on the rotor shaft but are well insulated from the shaft and from each other. Leads are taken from these rings to the field poles. The slip rings and brushes form the sliding connection between the stationary part of the exciting circuit and the revolving alternator field.

Regardless of whether the alternator field is constructed with spool type coils on projecting poles as shown in Fig. 91 or with coils imbedded in the slots of the solid rotor as used on high-speed turbine generators, as long as direct current is passed through these coils a powerful magnetic field will be set up at each pole of the electro-magnets formed by the coils.

When the alternator field is thus excited or energized and is then revolved within the armature or stator core, it is evident that the lines of force from the field poles will be cut by the stationary armature conductors. In this manner a voltage is induced in the armature conductors and, as we have already learned, this voltage will be proportional to the number of lines of force in the field, and to the speed with which the field poles are rotated, as well as the number of conductors in series in the armature winding.

As the frequency of the alternator depends upon its speed and the number of field poles, we cannot vary the speed of the alternator to vary its voltage, as we can with direct current generators.

The frequency must be kept constant in order to maintain constant speed of the motors attached to the system, and if the speed of the alternator were to be varied it would, of course, change the frequency. For this reason, the voltage of an alternator must be adjusted by means of the alternator field rheostat or the exciter field rheostat.

The voltmeter in Fig. 91 is across the armature leads of the exciter generator and will show any variations in the voltage produced by the exciter when its rheostat is adjusted.

When once the setting of the alternator rheostat, J, has been established, the voltmeter will give somewhat of an indication of the variations brought about in the alternator field strength by varying the exciter voltage.

The ammeter provides a more accurate indication, because its readings will show the amount of current flowing through the alternator field with any adjustment or change in either the exciter or alternator rheostats.

96. CONTROL AND ADJUSTMENT OF ALTERNATOR VOLTAGE

It is often necessary to change the voltage produced by the armature of an A. C. generator while it is in operation, in order to compensate for voltage drop in the lines with increasing load on the system. In other words, when the load is increased, the added current flowing through the line will cause a greater voltage drop; and, in order to maintain constant voltage at the load, the alternator voltage should be increased.

We have already mentioned that the alternator voltage can be controlled either by manual operation of the rheostats by the plant operator, or by an automatic regulating device.

Manual or hand regulation is generally used only in small power plants which are not operating as a part of a large system.

The accuracy and uniformity of hand regulation depend upon the faithfulness and skill of the operator. This method is not usually satisfactory in large plants or on systems where there are frequent variations of considerable amounts in the load, because it requires almost constant attention on the part of the operators and even then doesn't prevent some voltage variation at the load.

It is very important to have constant voltage on most electrical machines and devices, in order to maintain their rated torque and speed. This is particularly true where any lighting equipment is connected to the system, because if the voltage is allowed to vary to any extent, it causes noticeable fluctuations in the brilliancy of incandescent lamps.

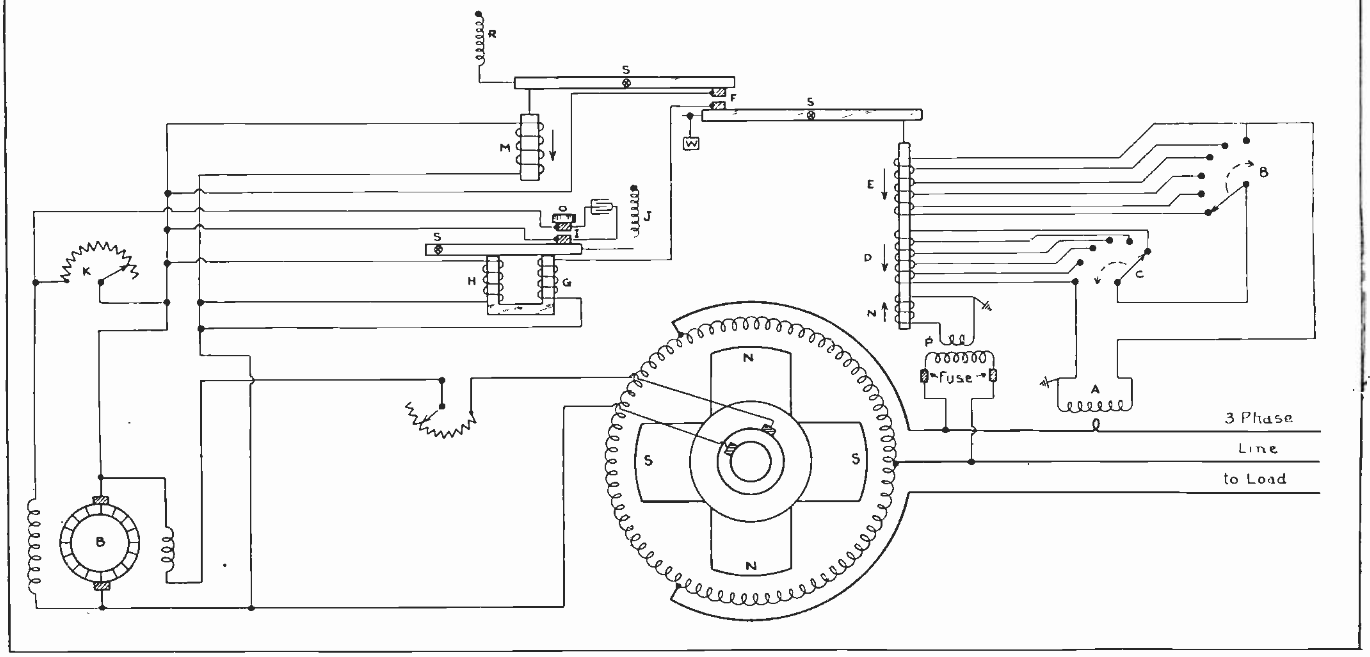

Fig. 92. The above diagram shows the wiring and illustrates the principles of a Tirrill automatic voltage regulator, properly connected to the exciter and line leads of a three-phase alternator.

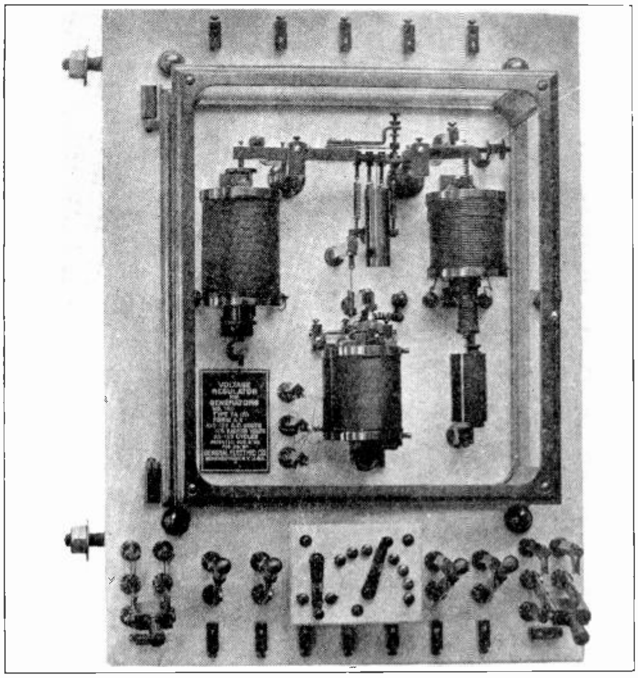

Fig. 92-A. This photo shows an automatic voltage regulator of a type similar to the one for which the wiring was shown in Fig. 92. and shows the arrangement of the solenoids and relays on the panel. (Photo Courtesy General Electric Co.)

97. AUTOMATIC VOLTAGE REGULATORS

To obtain more accurate and immediate voltage adjustment for all variations in load, automatic voltage-regulators are generally used in connection with the exciter field rheostat. One of the most common types of these devices is known as the Tirrill voltage regulator. This device automatically regulates the alternator voltage within very close limits by means of a set of relays which cut resistance in or out of the field rheostat of the exciter-generator.

The relays are operated by variations in the voltage and current load on the lines leading from the main alternator.

Fig. 92 shows the connection diagram of a Tirrill automatic voltage-regulator. If you will trace out each part of this diagram very carefully, you will be able to easily understand the operating principle of this device.

Whenever the load on the alternator is increased, this will increase the amount of current flowing in each wire of the three-phase line, and the current transformer, A, will have an increased current flow in its secondary winding.

The secondary of this transformer is connected through a set of multiple point switches, B and C, to the solenoid coils, D and E. When these two coils have their current increased, they tend to pull the plunger downward and operate the lever arm to close the contacts at F.

When the contact F is closed it completes a circuit through coil G of the differential relay which is energized by direct current from the exciter-generator. Coil H of this relay is connected directly across the exciter-armature and is normally energized at all times.

Coil G is so wound that when it becomes energized it neutralizes the magnetism set up in the core by coil H, and this allows the armature to release and be drawn upward by the spring, J, thus closing the contacts at I.

These contacts are connected across the exciter field rheostat, K, and can be arranged to short-circuit all or part of this resistance. When the resistance of this rheostat is cut out of the shunt field of the exciter it allows the exciter voltage to increase, thereby increasing the field strength and the voltage of the main A. C. generator.

If the A. C. generator voltage rises above normal, it will increase the voltage induced in the secondary coil of the potential transformer, P, thereby strengthening the solenoid coil, M, which will raise the plunger and open the contacts, F.

When the contact opens at F this de-energizes coil G of the differential relay, allowing the magnetism of coil H to draw the armature down and open contacts at I.

This removes the short-circuit from the exciter rheostat and places the resistance back in series with the shunt field. The contacts at F can also be opened by the coil M if the exciter voltage rises too high.

When using a regulator of this type, the exciter field rheostat K should be set at a point so that if it were used alone it would maintain a voltage slightly lower than that required by the system.

The automatic regulator will then short out the resistance of the rheostat often enough to maintain the voltage at its proper value. The arm which

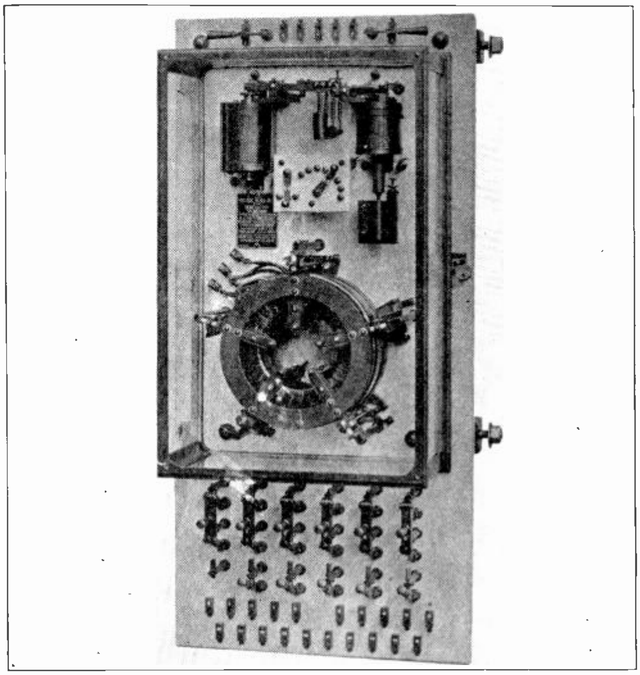

Fig. 92-B. Automatic voltage regulator for controlling the voltage of several alternators in parallel. (Photo Courtesy General Electric Co.)

operates the lower contact at F continually vibrates or oscillates, and opens and closes the contacts at frequent intervals during the operation of this device.

These contact arms are accurately balanced and adjusted by means of adjusting screws on the counter-weight, W, and the tension of the spring, R.

A condenser, O, is connected across the contacts I to reduce arcing and prevent burning and pitting of these contacts when they open and close the short-circuit on field rheostat K.

The relay armatures which operate the various contacts are pivoted at the points marked S. The switches, B and C, are used to vary the strength of the solenoid coils, E and B, and thereby adjust the regulator to operate at the proper amount of increased load current.

OPERATION AND PARALLELING OF ALTERNATORS

It is only in very few cases, such as in small isolated power plants, that a single A. C. generator is operated alone. Usually several A. C. generators are operated in parallel in the same plant, and in a great many cases a number of power plants generating A. C. are all tied together in parallel.

In our study of D. C. generators we found that it is absolutely necessary to have their voltages equal and polarities right if the machines are to be operated in parallel.

In order to operate alternators in parallel we **must have their voltages equal** and in addition to this, the machines must be properly **phased out** and **synchronized.**

These three conditions are the principal ones which must be observed before connecting any alternator in parallel with another.

You have already learned how to adjust the voltage of A. C. generators. Voltage adjustment, of course, can only be used to vary the voltage within a limited range above and below that of the normal voltage of the machine. Therefore, alternators must all be designed for the same voltage in order to operate successfully in parallel. Then the final adjustments can be made with the rheostats to get the voltages exactly equal.

98. PHASING OUT ALTERNATORS

"Phasing out" consists of identifying the phases of polyphase generators, in order to get the corresponding phases of two or more machines connected together. For example, the three-phase alternator, which is by far the most common, usually has the phases marked or designated A, B, and C. When connecting an alternator to one or more others, or to the busses in a power plant in which other generators are operating, each phase must connect to the corresponding phase of the busses or other alternator: A to A, B to B, and C to C.

Phasing out is usually necessary only when a machine is first installed or after some changes have been made in the connections of the windings of the machine. Once the generator has been properly phased out and the connections permanently made to the busses on the switchboard, it is not necessary to test the phases again unless changes are made in the generator or in the plant.

If a generator is disconnected even temporarily, the phases should be plainly and surely marked, so that they can be connected back in the same manner when the machine is again attached to the busses or leads to the other alternator.

If an armature of an alternator has been rewound or if the connections have been changed in any way, the machine should always be phased out before reconnecting it to the busses or line.

Synchronizing is an operation which must be performed every time an A. C. generator is paralleled with other running machines. This will be explained in later paragraphs.

There are several methods that can be used for phasing out A. C. generators. Two of the most common are known as the **lamp-bank method** and the **motor method.**

Equally good results can be obtained with either method, and the choice of one or the other will usually depend upon the convenience or the adaptability of the available equipment.

99. LAMP-BANK METHOD OF PHASING OUT

Fig. 93 shows the connections and illustrates the principle of the lamp-bank method of phasing out alternators. In this diagram two alternators are shown properly connected and furnishing power to the busses and outgoing line. A third similar generator is shown suitably located and ready to be phased out and connected to the live busses. The lamps to be used in the phasing-out operation are shown connected around the oil switch.

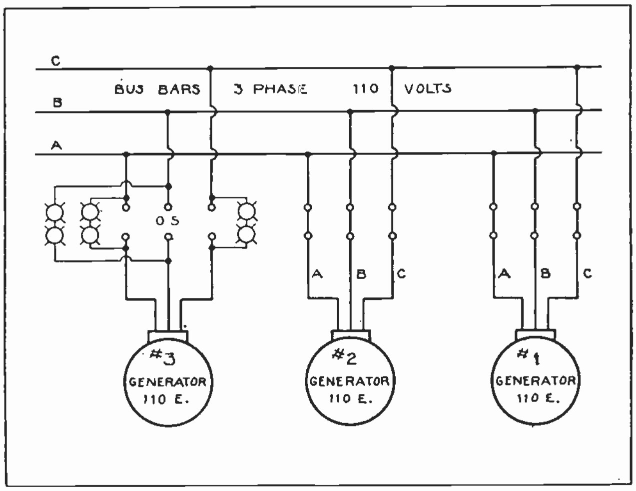

Fig. 93. This diagram shows the method of connecting lamps for phasing out an alternator which is to be operated in parallel with two others.

A sufficient number of lamps must be connected in series in each phase to withstand double the voltage of the alternator. It can readily be seen, therefore, that if the voltage of the machine is higher than 440 volts, it would require a considerable number of lamps in order to use this method, that is if the lamps only were used.

So, with higher voltage machines step-down transformers are often used to reduce the voltage to the lamps. Small power transformers or instrument transformers can be used.

In phasing out a new generator by this method it is necessary to bring it up to its rated speed and voltage. The lamps connected as shown in Fig. 93 will then alternately light up and go dark, due to the generator voltages being out of phase and in phase at different periods.

If all three sets of lamps become bright and dark together or at the same time, it indicates that the proper phases of the new generator are connected to corresponding phases on the opposite side of the oil switch. If the lights do not burn bright and dim together it is then necessary to interchange or reverse any two leads of the generator which is being phased out.

While this interchange can be made anywhere between the generator and the oil switch or between the oil switch and the busses, it is usually best to reverse the leads right at the generator terminals. We should never reverse the leads of any other machine to make the phases match with the new generator, as this would reverse the rotation of all of the three-phase motors operating on the system.

Extreme caution should be used never to connect even a small generator in parallel with another one or to live busses, without first carefully phasing it out; because if one A. C. generator is connected in parallel with others when out of phase, it results in practically a short-circuit on the running machines, the same as though one D. C. generator of the wrong polarity were connected in parallel with others.

Care should also be used to see that the lamps are of sufficient number and resistance to stand double the voltage of the alternator, because at certain periods during the alternations they may be subjected to the voltage of the new machine plus that of the running machines in series.

When phasing out higher voltage machines and using lamps and transformers, the primary and secondary leads of the transformer should be carefully marked and tested if necessary, to determine whether they are of additive or subtractive polarity. These terms will be explained later, in the section on transformers.

Care should also be taken not to reverse either the primary or secondary leads of the transformer, but to have them all connected with the same respective leads both to the alternator and busses.

100. MOTOR METHOD OF PHASING OUT

Fig. 94 shows the connections for phasing out an alternator by means of a three-phase motor. To use this method conveniently and to avoid making mistakes in connections, it is usually best to connect the leads of the three-phase motor in uniform order to the blades of a double-throw, three-pole, knife switch.

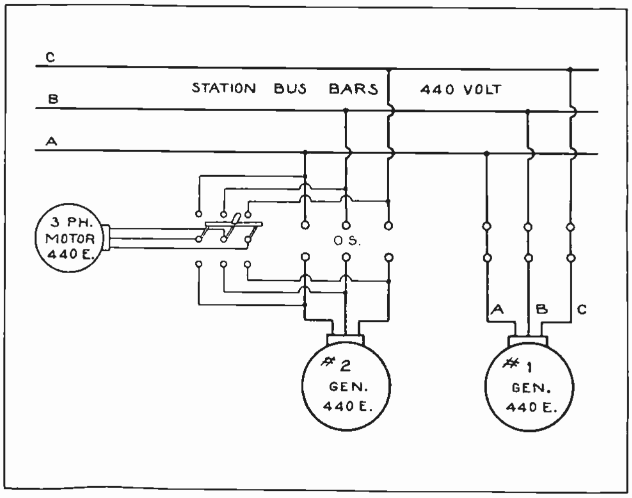

Fig. 94. The above sketch shows the connections and illustrates the method for phasing out an alternator by means of a three-phase motor.

The outer contacts or clips of the switch on one side are connected to the busses or running generators, while the clips on the other side are connected to the machine which is to be phased out. With this connection the motor can be operated either from the new generator or the running machines. When the connections are properly made, the generator which is to be phased out is brought up to rated speed and voltage. The knife switch is then closed to operate the motor from this generator, and the direction of the motor rotation is carefully noted.

To avoid mistakes, it is best to mark this clockwise or counter-clockwise direction of rotation with a chalked arrow, either on the pulley or the frame of the machine, on the side from which you are observing it. Then open the double-throw switch and allow the motor to come to a full stop. The switch is then closed in the opposite direction, to run the motor from the bus bars and running alternators, and the direction of rotation is again noted.

If the motor rotates in the same direction in both cases, the generators have like phases connected opposite to each other on the switch terminals. If these same leads are carefully connected to the oil switch in the same respective manner, the generators should operate satisfactorily in parallel after having been synchronized.

If the motor rotates in the reverse direction when the switch is in the second position, it will be necessary to interchange or reverse any two leads of the generator which is being phased out. The connections should then be tested again by running the motor from each side of the switch, and it should run in the same direction in both positions of the switch blades.

If the voltage of the alternator is too high for any available motor, small power transformers can be used to reduce the voltage for making this test of the phases.

101. SYNCHRONIZING OF ALTERNATORS

As previously mentioned, any A. C. generator must be carefully and accurately synchronized before being connected in parallel with other running generators.

Synchronizing is one of the most critical operations to be performed in a power plant, and should be given careful study in this section of the Reference Set as well as in your department lectures and practice. Be sure to practice this operation thoroughly with the alternators in the A. C. Department of your shop course.

This is one operation which you want to be sure you can perform skillfully and confidently before applying for any position as a power plant operator.

Synchronizing means to bring the generators into step or so that their positive and negative alternations occur at exactly the same time. On large machines this must be accurate to within a few degrees; that is, the same alternations of each machine must have their maximum and zero values occurring at the same instant in each phase.

By referring back to the sine curves which were shown for the voltage alternations in the first A. C. Section of this set, and also by drawing a few curves for yourself, if necessary, you will soon see what is meant by having the alternations occur in phase or in step with each other.

If alternators were connected together when out of phase more than a very few degrees, it would result in very heavy surges of current between the two machines, because of the difference in their voltages at any instant. If two machines were connected together when they were 180° out of phase, this would mean that one generator would be producing positive voltage while the other was producing negative voltage, and it would result in a double voltage short-circuit, the same as though two D. C. generators were connected together with wrong polarity.

The nearer the two machines are to being in phase, the less will be the difference in their instantaneous voltages at any point of the cycle.

By careful adjustment of the speed of the "incoming" alternator, we can by means of a synchronizing device get the two machines exactly in phase with each other. A skillful operator can then close the oil switch at just the right instant and connect the machines in parallel with practically no resulting surge or current flow between the "incoming" and running generators.

If large generators are connected together when they are very much out of phase, it is likely to wreck the machine windings and possibly cause serious damage to the generators and other plant equipment.

The two most common methods for determining when alternators are in synchronism are by the use of either a synchroscope or lamp-bank. A voltmeter is sometimes used for this purpose also. A synchroscope is by far the more reliable and convenient, as it shows whether the incoming generator is running too slowly or too fast and indicates which way the governor or throttle of the prime mover should be adjusted in order to bring this machine to the same frequency as the running machines.

The pointer of the synchroscope also indicates more accurately when the generators are exactly in phase with each other.

The operation and connections of the synchroscope were explained in the section on A. C. Meters, and you should practice synchronizing A. C. generators with a synchroscope as well as the lamp banks in your shop department.

When voltmeters are used, they are connected the same as the lamp bank, which will be explained in the following paragraphs.

Voltmeters to be used for synchronizing should be of the "dead beat" type, or well damped so that their pointers do not oscillate or swing too far beyond the actual voltages. Voltmeters are seldom used for this purpose because of their cost and the fact that a synchroscope, costing very little more, is much more convenient and reliable.

102. SYNCHRONIZING WITH LAMPS

The lamp-bank method of synchronizing is used quite extensively in small plants, where the generators are not large and the cost of the synchroscope is considered prohibitive.

Fig. 95 shows the connections for using lamps to synchronize two alternators. You will note that these connections are practically the same as when lamps are used to phase out an alternator, except that the lamps are arranged with a double-throw, three-pole switch, so they can be used to synchronize either alternator with the busses, according to whichever machine may be running at the time.

The incoming generator, which in this case is No. 1 in the figure, is started and brought up to speed and voltage. The synchronizing switch, S, is then closed to the right and the lamps will alternately become bright and dark, the same as in phasing out an alternator, except that in this case the

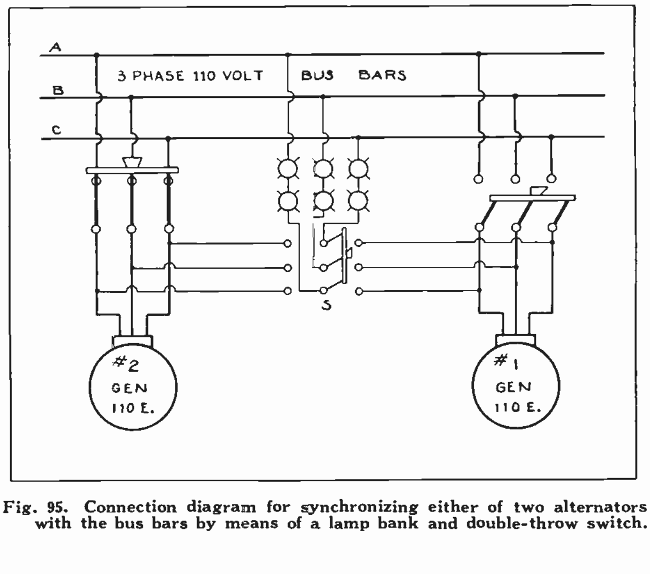

Fig. 95. Connection diagram for synchronizing either of two alternators with the bus bars by means of a lamp bank and double-throw switch.

alternators are presumed to have been phased out and the three sets of lamps should all go bright and dark together.

When the generators are 180° out of phase, or one machine positive and the other negative, their voltages will add together through the lamps and cause the two lamps in series in each phase to burn brightly.

When the generators are exactly in phase—that is, phase A of generator No. 1 reaches its maximum voltage at the same time phase A of generator No. 2 does—these voltages are then opposing each other on the busses and no current will flow through the lamps.

If the frequency of the incoming machine is only slightly different from that of the running machine, the lamps will brighten and darken very slowly; but if the frequency of the incoming machine is considerably different from that of the running machine, the lamps will flicker on and off very rapidly.

So, by adjusting the governor or throttle of the prime mover which drives the incoming generator and watching the operating of the synchronizing lamps, we can tell whether we are approaching the frequency of the running generator or if we are getting farther away from it.

When the speed of the incoming generator is properly adjusted and the frequencies are almost exactly the same, the lamps should go on and off very slowly, actually remaining dark for a considerable fraction of a second, and requiring several seconds to change from bright to dark each time.

During the middle of this dark period, the switch which connects the incoming generator to the busses should be closed. By watching the speed with which the lamps brighten and go dark throughout several of these periods, one can approximately time the length of the dark period so that the switch can be closed about the middle of this period.

This requires good judgment and skill, which can be obtained only by practice, and you should be sure to obtain this pratice on the generators in the A. C. shop department.

One of the disadvantages of using lamps for synchronizing is the fact that an incandescent lamp requires a considerable proportion of its rated voltage to cause the filament to light even enough to be noticeable. Therefore, there may be some small difference in voltage between the two alternators even when the lamps are dark. This is the reason for closing the switch at the middle of the dark period, when the voltage difference between the two machines should be the very lowest.

Alternators should never be paralleled as long as the lamps are burning at all; or, in case a synchroscope is used, as long as it indicates any phase difference between the two machines. If the phase difference is small when the machines are paralleled, they may pull in step; and while there may not be any serious damage the first time this is done, if it is done a number of times the severe shock to the windings will sooner or later damage their insulation or the coil bracing.

The very heavy surges of current which result through the generator windings when they are paralleled slightly out of phase, set up enormous magnetic stresses which tend to distort the conductors at the end of the coils and also apply very heavy pressures against the insulation in the slots. This also results in severe mechanical shock to the entire machine.

103. SYNCHRONIZING WITH SYNCHROSCOPES

The lamp-bank method will probably be encountered in a number of small plants and may often be very handy to you in synchronizing small generators when no synchroscope is available. The synchroscope is, however, by far the most commonly used in modern plants of any size, and because of its extreme accuracy this instrument should be used whenever possible.

Another of the decided advantages of the synchroscope over the lamp-bank is that its pointer indicates whether the incoming generator is running too fast or too slow.

When the synchroscope is used, the governor or throttle of the prime mover is adjusted according to the indication of the synchroscope pointer and whether it is revolving in the direction showing that the incoming generator is running too fast or in the opposite direction showing that it is running too slow.

When the speed of the incoming generator has been adjusted to a point where the synchroscope is revolving very slowly in the "fast" direction the knife switch or oil switch which connects the incoming machine to the busses can then be closed, just as the pointer reaches the mark on the center of the scale.

By connecting the alternators together when the incoming machine is running slightly faster than the running machines, it enables the incoming gen-

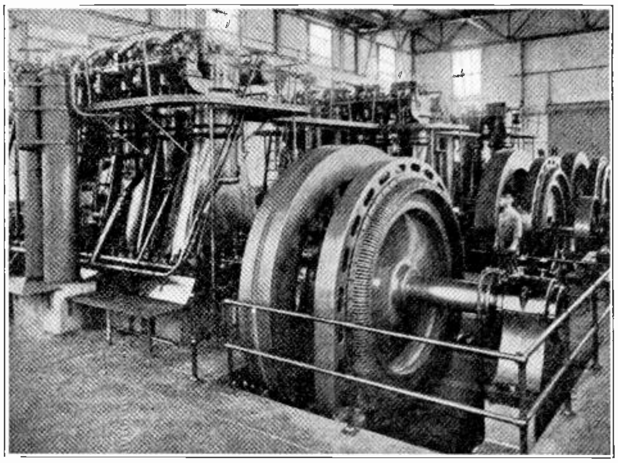

Fig. 95-A. This photo shows a group of alternators driven by Diesel oil engines. Many power plants located in the oil fields, or in places where water and coal are difficult to obtain, are equipped with engines and generators of this type.

erator to pick up its share of the load more readily and smoothly.

When paralleling alternators by means of remote controlled oil switches it is often necessary to allow a fraction of a second for the actual closing of the oil switch. This is done by closing the remote control switch just before the synchroscope pointer reaches the mark on the scale, so that the oil switch will close and parallel the alternators just at the time the pointer is on the mark and the machines are in exact synchronism.

104. STARTING UP ALTERNATORS

The procedure to be followed when starting an alternator and preparing to bring it on to the busses in parallel with others may vary in certain details with the operating policies of different plants, but there are certain general methods and precautions to be followed.

The following material on this subject applies only to alternators which are already installed and in operating condition. The procedure for starting new alternators which are to be operated for the first time will be covered in a later section on the installation and operation of electrical machinery.

When starting an alternator in a small plant, the electrician or switchboard operator may also have to start the prime mover. In large power plants the prime movers are usually started and controlled by the turbine engineers or men of the steam crew.

In either case, a certain amount of time must be allowed for the routine and preparations necessary in starting the prime movers. These points will be covered more fully in a later section on prime movers.

Before starting an alternator we should make sure that the armature and field switches are open. The field switch should be set in the discharge position.

If the exciter is separately driven, it should be started and brought up to full rated speed before the alternator is started. If the exciter is driven from the alternator shaft it will, of course, come up to speed at the same time the main alternator does.

In either case the exciter voltage should be kept low, usually at about 50% of its rated voltage, until after the field circuit to the alternator has been closed. This allows the voltage to be built up more gradually in the armature of the alternator.

The alternator field switch can next be closed, to energize the field poles. Then adjust the exciter voltage until the alternator armature develops its full rated voltage. If the generator is to operate alone and supply power to a line, the armature switch may then be closed. If the generator is to operate in parallel with others, it must first be properly synchronized before closing the armature switch.

In some cases, when starting a single alternator that is to be operated alone, it is desirable to close its armature switch to the line with the alternator voltage at about one-half its full rated value. This allows the generator to pick up any load which may have been left connected to the system, without such heavy current surges through the machine. The voltage can then be brought up to normal by means of the field rheostats, after the armature switch is closed.

Always remember that the three most important requirements before paralleling A. C. generators are: (A) They must be of equal voltage; (B) Generators must have been phased out and have like phases ready to connect together; (C) The generators must be in synchronism.

When these conditions have been obtained the armature switch may be closed and the incoming generator connected in parallel with the bus bars and running machines. The alternators should then operate satisfactorily in parallel, if they are of the proper design and characteristics.

105. ADJUSTING AND TRANSFERRING LOAD ON ALTERNATORS

The next step is to make the alternator which has just been connected pick up its share of the load on the system. This cannot be done by increasing the armature voltage, as is done with direct current generators.

Alternating current generators are caused to take more of the load by slightly increasing the power applied by the prime mover. This is done by adjusting the governor or throttle of the prime mover so it will deliver slightly more power to the alternator.

This, of course, tends to make that alternator on which the power is increased run slightly faster than the others, but the tendency of two or more alternators to hold together in synchronism after they are once paralleled prevents the machine from actually running any faster than the others.

Instead, the additional power applied by the prime mover merely causes this generator armature to advance a few degrees in phase ahead of the others, and this will cause it to pick up its share of the load.

The field rheostat can then be adjusted to reduce any cross currents or wattless currents between the armatures of the alternators in parallel. This is very important, and the field current should be adjusted until the armature current of each alternator is at the minimum for the load they are carrying at that time.

In other words, by having wrong field adjustment on alternators, it is possible to have the sum of the currents from the separate machines equal considerably more than the total load current being taken from the busses. These cross currents between the alternators may result in heating, if they are not kept at a minimum.

When the proper load distribution has been obtained between the generators operating in parallel, they should maintain this division of load, provided the governor of the prime movers is properly adjusted so that all machines respond alike to variations in the load.

106. SHUTTING DOWN AN ALTERNATOR

When the load on a certain power plant or group of alternators is reduced to such an extent that it is not economical to keep all of the alternators operating, one of the machines can be disconnected from the bus and shut down until such time as increased load may again require its operation.

Shutting down an alternator is a simple operation, but there are several important steps to be followed in order to perform this operation properly.

In some small plants A. C. generators are taken off the busses by merely opening their armature switches. This, however, results in a very sudden dropping of the load of the disconnected machine and may result in heavy current surges and fluctuations in the voltage of the other machines.

For this reason many power companies object to this practice, and require that the load be gradually dropped from the machine which is to be disconnected. This can be done in the following manner.

The throttle valve on the prime mover of the generator to be shut down is first closed little by little until the generator drops pratically all of its load and the ammeter or wattmeter in its circuit shows its current output to be at a very low value. In up-to-date plants of medium or large size, wattmeters or watthour meters give the most reliable indication when the load is reduced to zero, as the ammeter may then still show some flow of wattless current.

This load is, of course, automatically picked up by the other generators, or is in reality simply transferred by reducing the power applied to the alternator which is being shut down.

When the load on the machine has been reduced to zero or a very low value, the armature switch is then opened, disconnecting the generator from the busses. The throttle valve of the prime mover is then closed all the way and the generator is allowed to drift to a stop.

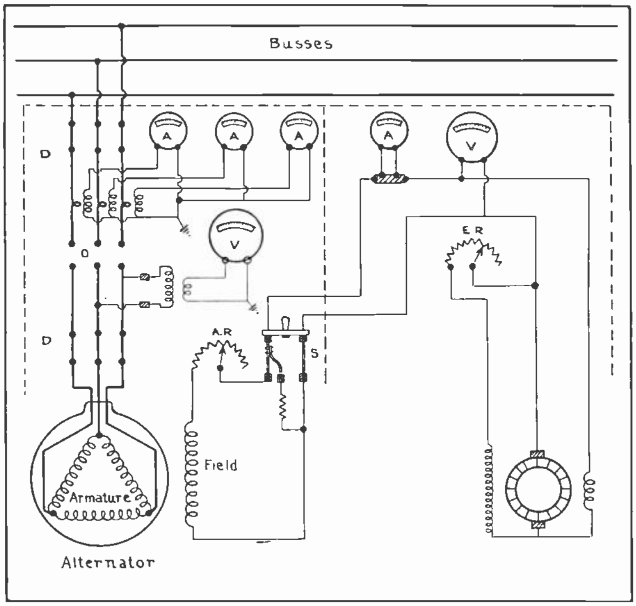

Fig. 96. This diagram shows the wiring and arrangement of a three-phase alternator, and the meters and equipment commonly used on the switchboard panels.

After the armature switch has been opened, the field switch may be opened if desired; or the field can be left energized temporarily, in order to bring the generator to a stop in a little shorter time. **The field switch should never be opened before the armature switch has been opened.**

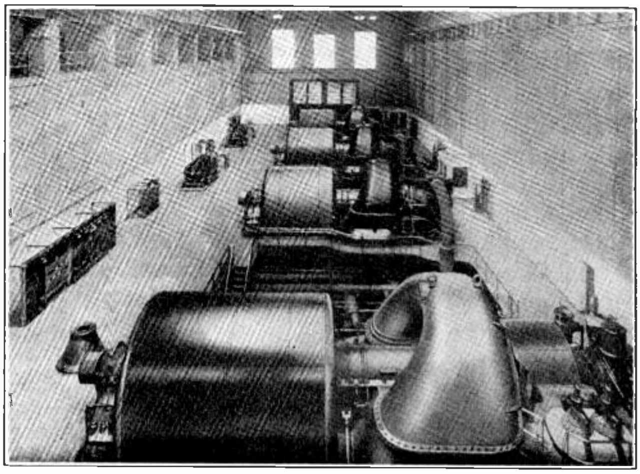

Fig. 97. Interior view of a large power plant showing several of the steam-turbine-driven alternators and also part of the switchboard and the exciter-generators.

When the generator comes to a complete stop and is standing idle, the field switch should always be open. It is also a very good precaution to open any disconnect switches which are between the generator, oil switch, and the bus bars. This will prevent any power flow from the busses to the generator armature if the oil switch should accidentally be closed when the machine is standing idle.

Different generating companies have various special rules to meet the operating conditions in their various plants, and any operator should make a careful study of these rules as well as the general rules and principles which are covered in this section. All such rules are made to provide safety for operators and machines, as well as to provide satisfactory service to the customers to whom the power is supplied.

107. ARRANGEMENT OF INSTRUMENTS AND CONNECTIONS FOR ALTERNATORS

Fig. 96 shows a diagram of the connections for an alternator and its exciter. This diagram also shows the meters to measure the voltage and current of each machine. The three A. C. ammeters are connected, by means of current transformers, to measure the current in each phase of the alternator.

The A. C. voltmeter is connected by means of a potential transformer to indicate the voltage of the alternator. This voltage, of course, should be the same on all three phases; so it is only necessary to measure it on one phase.

You will note that the voltmeter connections are made between the alternator and the oil switch, O; so that the voltage of the alternator can be read before the oil switch is closed to parallel this machine with any others which may be connected to the busses.

Two disconnecting switches, D, are provided, one on each side of the oil switch. After the oil switch is open and the alternator shut down, these disconnecting switches can be opened with a switch pole, or by hand in the case of low voltage circuits, and thus the oil switch and instrument transformers are separated from the live busses.

This permits any necessary repair work to be done on these devices with safety. The alternator rheostat, A.R., and the field disconnecting switch, S, are mounted on the alternator panel of the switchboard. The alternator panel is also very often provided with a wattmeter and a watthour meter. The wattmeter is to indicate the power output of the machine at any instant and the watthour meter tells the power in kw. hours which is produced by the machine during any certain time period.

The alternator panels are often provided with switches or plugs for connecting the synchroscope or synchronizing lamps to any machine that is being started. These auxiliary devices are not shown in the diagram in Fig. 96, but they will be covered more fully in a later section on switchboards.

The exciter panel at the right in Fig. 96 contains the D. C. ammeter and voltmeter, for measuring the current to the field of the alternator and the voltage generated by the exciter. The exciter field rheostat, E.R., is also on this panel.

In some power plants the exciter panel is located adjacent to the alternator panels in this manner. In other large plants the direct current from the exciters may be metered and controlled from an entirely separate switchboard.

Among the more important features to be checked and watched in the care of alternators are the following. The temperature of both the windings and bearings should be frequently checked, and the meters watched to see that the machines are not overloaded. The speed and frequency of alternators should be accurately maintained, and the fields properly adjusted to keep cross currents at a minimum between parallel alternators. Tests should be made periodically on the insulation of alternator windings to note any weakness before it results in a complete failure of the machine.

Always see that there is plenty of cool, clean, dry air available for cooling the machines. All parts of the generators should be kept clean, and the windings should be cleaned with compressed air to keep dust or dirt from blocking ventilating passages and causing excessive heating. Additional material will be given on the care of generators in a later section on maintenance of electrical machinery.

Fig. 97 shows the generating room in a large power plant with four large steam-turbine-driven

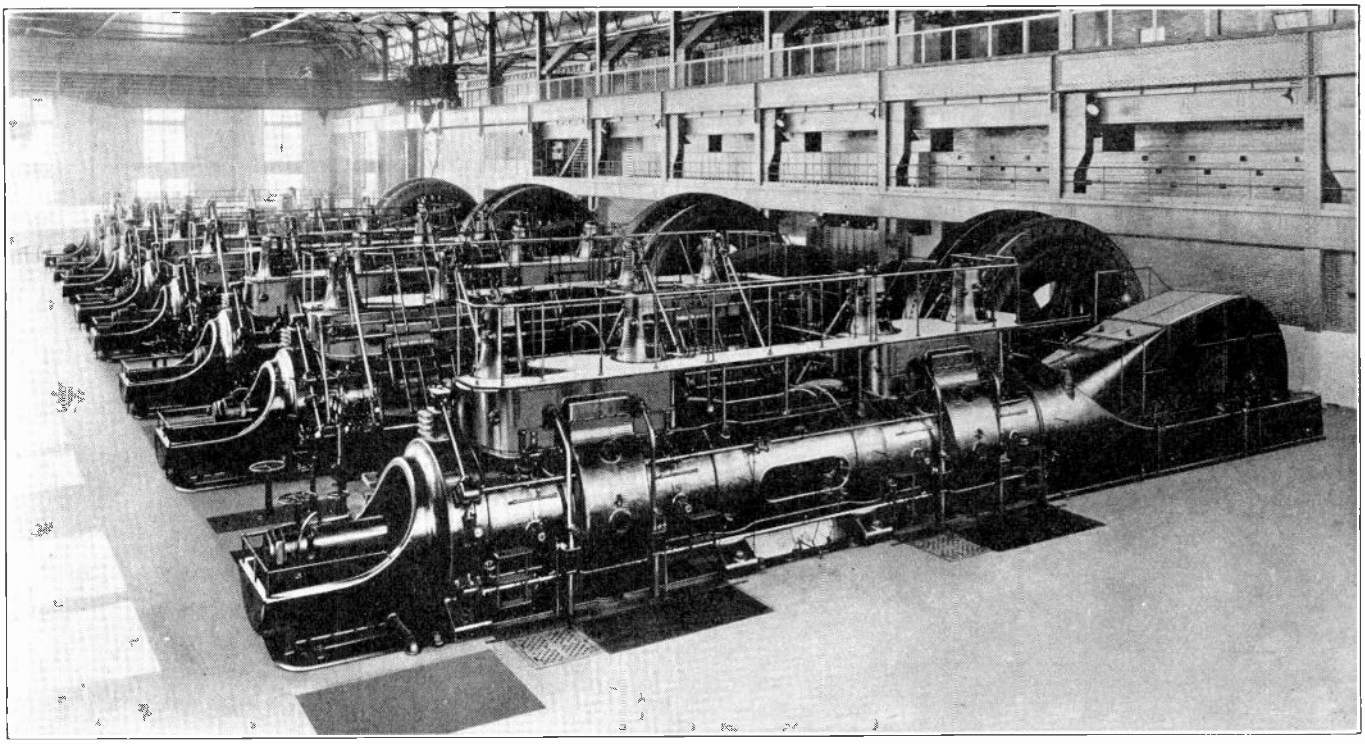

Fig. 98. Privately owned power plant producing alternating current for use in steel mill operations. These alternators are driven by gas engines which burn waste gases as a fuel. (Photo Courtesy Allis Chalmers Mfg. Co.)

alternators which are operated in parallel. Part of the switchboard and also the small exciter generators can be seen at the left of the photo.

Fig. 98 shows a section of a large industrial power plant in a steel mill. Waste gases from blast furnaces are used to operate twin tandem gas engines, and these engines in turn drive the alternators, which are operated in parallel to supply electricity used in the mill.

A great many of the larger factories and industrial plants have their own private power plants to generate the vast amount of electrical energy which they use.

Operation of electrical equipment in plants of this type as well as in the mammoth generating stations which are owned and operated by public utility companies, provides fascinating and profitable work for many thousands of trained men.

To be able to qualify for a responsible position in a plant of this kind is well worth a thorough study of everything covered in this entire Reference Set and in your shop course.

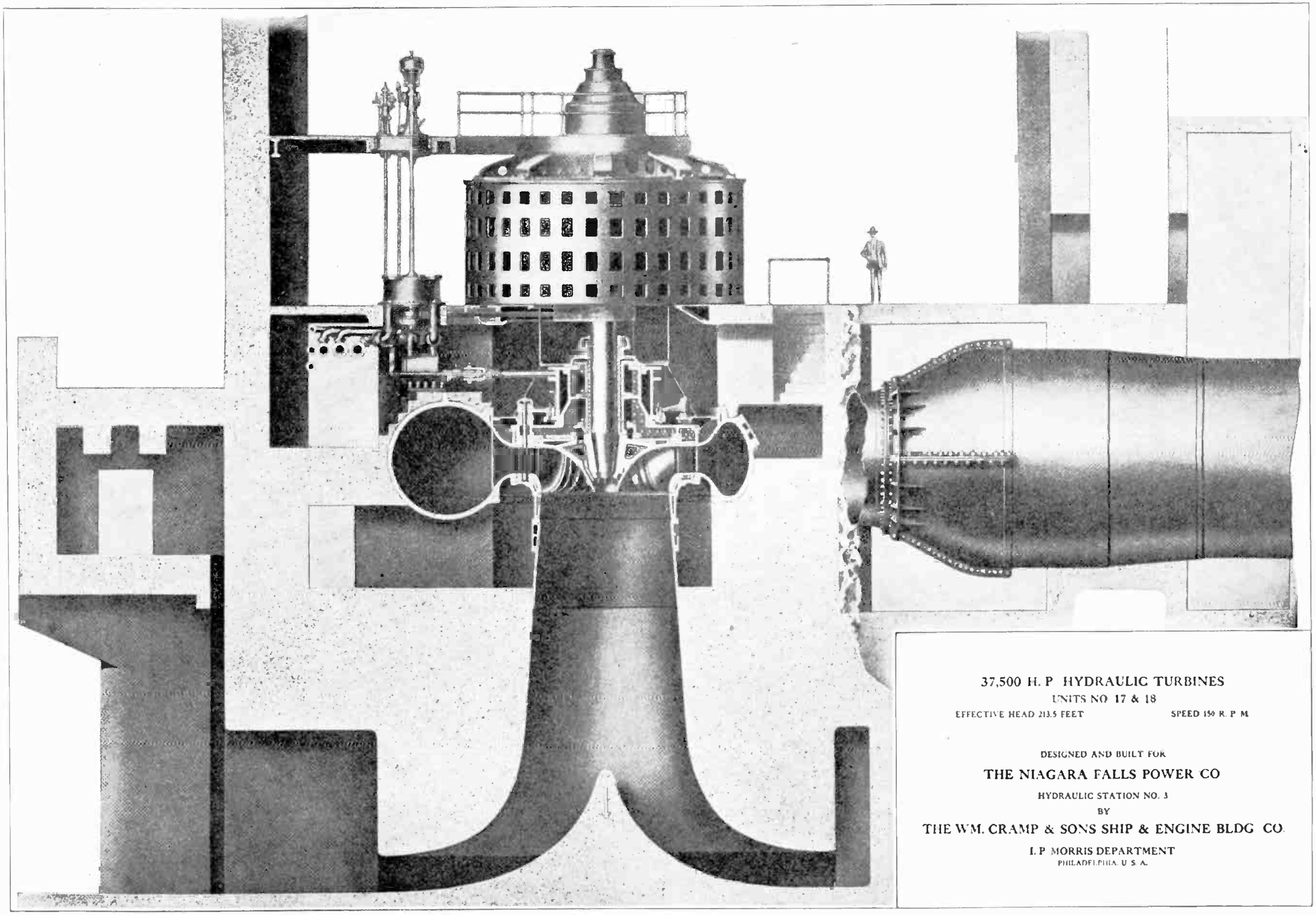

Fig. 98-A. This photo shows a large water-wheel driven alternator and also an excellent sectional view of the hydraulic turbine which drives the alternator. Note the size of the generator compared with the man in the picture. Hundreds of machines of this type are in use in hydro-electric power plants throughout the country.

COYNE
Electrical School
CHICAGO ~ ~ ILLINOIS
ESTABLISHED 1899

ALTERNATING CURRENT
AND
A. C. POWER MACHINERY

Section Four

Transformers
Types, Construction, Cores, Windings
Air, Oil and Water Cooling, Operating Temperatures
Operating Principles
Ratios, Voltages, Polarities
Connections
Star and Delta, Paralleling, Phasing Out
Polarity Tests, Grounding
Special Transformers
Tap Changing, Scott, Auto Transformers
Induction Regulators, Instrument Transformers
Tests, Field Problems, Maintenance

TRANSFORMERS

We have already mentioned that it is necessary to use high voltage in order to transmit large amounts of electrical power economically over long distance lines. This, you will recall, is one of the principal advantages mentioned for alternating current, because it is possible to economically increase the voltage of alternating current with transformers.

A transformer is a device by means of which alternating voltages may be stepped up or down as desired. When the voltage of a circuit is raised or lowered by means of a transformer, the current is varied in the opposite direction by the same proportion.

If we raise the voltage the current is stepped down, or if we decrease the voltage the current is increased. For example, if we consider a circuit having 5,000 watts at 100 volts, the current in this case will be W ÷ E, or 5000 ÷ 100, which equals 50 amperes.

If we were to raise the voltage of this same circuit to 1000 volts the current would then be 5000 ÷ 1000, or 5 amperes.

It is easy to see that a much smaller conductor could be used to carry the 5 amperes than would be needed for 50 amperes, so the same amount of power can be transmitted over smaller wires at high voltage than it can be at low voltage. This is the principle applied to modern transmission lines, and whenever a large amount of power is to be transmitted to some distant location the voltage is stepped up by means of transformers to some one of the standard high voltages, and the current is thereby reduced a corresponding amount.

It is then possible to use a much smaller amount of copper in the conductors, and yet operate the transmission lines at a certain economical percentage of loss. These smaller conductors require much lighter supporting structures, such as the poles and steel towers, and lighter insulators and fittings.

As the cost of the copper in a transmission line is very great and the poles or towers also represent a large investment, the saving effected by the use of higher voltage is enormous.

For example, 50,000 kw. can be transmitted many miles at a potential of 100,000 volts over a copper conductor less than an inch in diameter; but if this same amount of energy were to be transmitted at 500 volts, it would require a conductor over a foot in diameter to carry the current with the same amount of loss.

From these points just mentioned, it is evident that alternating current provides a very convenient and economical means of transmitting large amounts of power for considerable distances, by stepping up the voltage at the generating plant with transformers and then stepping it down again to safe and suitable voltages for the equipment at the point where the energy is to be used.

By far the greater amount of electrical energy is used at voltages from 110 to 440. Some of the larger motors, however, are operated at voltages from 2300 to 6600, and in some cases as high as 12,000 volts or more.

Transformers are one of the most efficient pieces of electrical equipment that we have; the efficiencies of some of the very largest sizes ranging over 99%. These high efficiencies are obtainable because the transformer has no moving or wearing parts and therefore no friction or mechanical losses.

For this same reason, transformers require very little care and attention, except to maintain the proper insulation and ventilation of their windings.

Power transformers are often referred to as **static transformers**, even though they have nothing to do with static electricity. This term is used because their parts are all stationary. We mention this term at this point because it is often confusing to the student or electrician to hear a transformer called by this term, if he doesn't know what it means.

108. TYPES OF TRANSFORMERS

We have already learned that a transformer consists primarily of an iron core which provides a path for the magnetic flux and on which are placed the two windings; one called the **high tension winding** and the other the **low tension winding.** The high tension winding (H.T.) is the one which has the greatest number of turns, and the low tension winding (L.T.) is the one which has the smaller number of turns.

These windings are also commonly referred to as **primary** and **secondary** windings. The primary winding is always the one which is connected to the source of power. The secondary winding is always the one which receives its power from the primary by induction, and is the one connected to the load.

There are several common types of transformers and they are classified according to the manner of their core construction. These are known as: the **core** type, **shell** type, and **distributed** type.

It may help you to distinguish between these types by remembering the number of magnetic paths or circuits which each type of core provides for its flux. The simple core type provides one path; the shell type, two paths; and the distributed type, three or four paths.

The sketches in Figs. 99 and 100 show the differences between these common types of transformer cores. Fig. 99 shows the plain core-type transformer, consisting of four sides, or legs as they are commonly called, arranged in the form of a square or rectangle. The primary and secondary coils can be wound on opposite legs, as shown in this figure, or they can both be wound on the same core leg if desired.

When the primary winding is excited with alternating current, it sets up an alternating magnetic flux which is carried by the core over to the secondary winding. As the lines of force expand and contract, due to the alternations of the current, they cut across the turns of the secondary winding, thereby inducing voltage in this winding by the principles of electro-magnetic induction which were explained in the Elementary Section of this reference set.

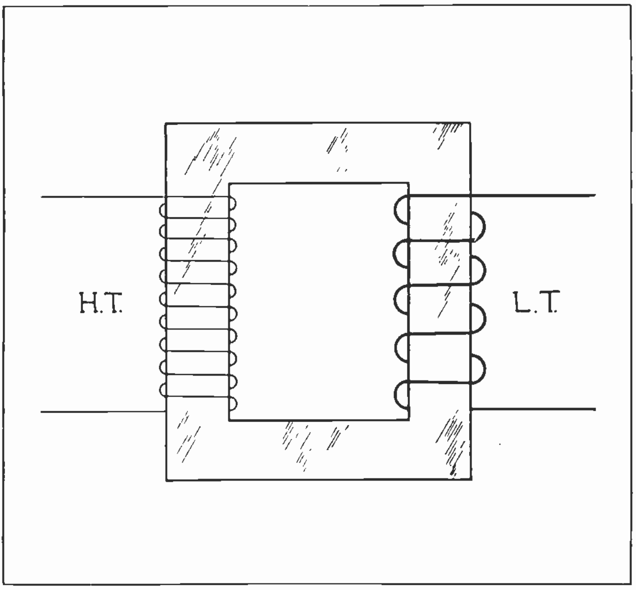

Fig. 99. This sketch shows the core and windings of a simple transformer. The winding on the left with the greater number of turns is the high tension winding, and the one on the right the low tension winding.

The amount of voltage which will be induced in the secondary winding depends upon the ratio of the number of turns in the primary and secondary coils. If the secondary has fewer turns than the primary, the voltage will be stepped down; on the other hand, if the secondary has a greater number of turns, the voltage will be stepped up.

An ordinary transformer can be used to step the voltage either up or down, depending upon which of the windings is made the primary, or excited by the applied voltage. So we find that, in the case of step-up transformers, the primary is the winding with the fewer turns; while on a step-down transformer, the primary is the winding with the greatest number of turns.

109 TRANSFORMER CONSTRUCTION

The purpose of the transformer core is to provide a low reluctance path for the magnetic flux. Transformer cores are therefore made of a special grade of soft iron or silicon steel, and are built up of thin laminations. These laminations are insulated from each other, either by a coating of insulating varnish or by an oxide scale which is formed on their surfaces by a heat-treating process.

This laminated construction reduces eddy currents which would otherwise be set up by the alternating flux and would cause the core to overheat.

The left view in Fig. 100 shows a sketch of a shell type transformer core with the primary and secondary windings both placed on the center leg. On the right in Fig. 100 is shown a sketch of the distributed type core on which the coils are also wound on the center leg and are surrounded by the four outside legs of the core.

This distributed-type core is used principally for low-voltage lighting and distribution transformers in sizes under 50 kv-a. The large area of core iron, well distributed around the coils, makes the "no load" losses very low with this type of transformer, so that it is ideal for use on lighting circuits where the load may be very small at times.

The core-type and shell-type transformers are both suitable for large capacity and high voltage work. The core-type is best suited for the very high voltages, because its coils can be more easily wound and insulated than those of the shell-type. The windings of the core-type transformer, being located more on the outside of the core, can therefore radiate heat away from the windings more rapidly.

The shell-type core, because of its shape and the location of the windings on the center leg, provides somewhat better mechanical protection for the coils during handling in and out of the transformer case. The shell-type transformer is best suited for moderate voltages and heavy currents.

Fig. 101 shows a complete distributed-type, transformer core of the three-leg construction. This view shows the manner in which the core legs are assembled from the thin laminations and also the

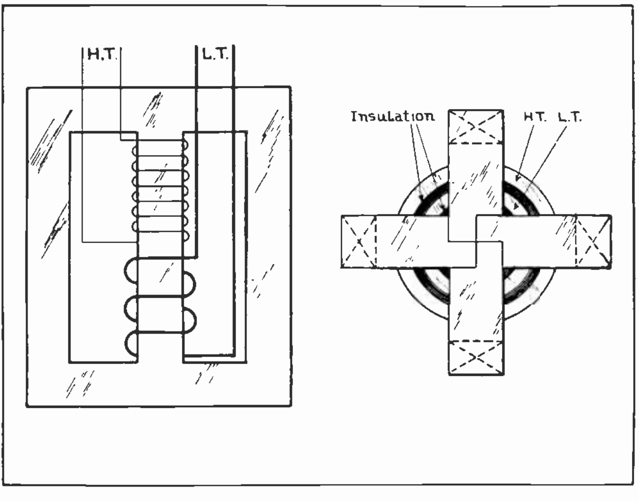

Fig. 100. The diagram on the left shows a transformer with a shell-type core, and on the right is shown the top view of a transformer with a distributed-type core. This view shows the top edges of the coils and insulation, while the sketch on the left shows a schematic diagram of the coils in their position on the core.

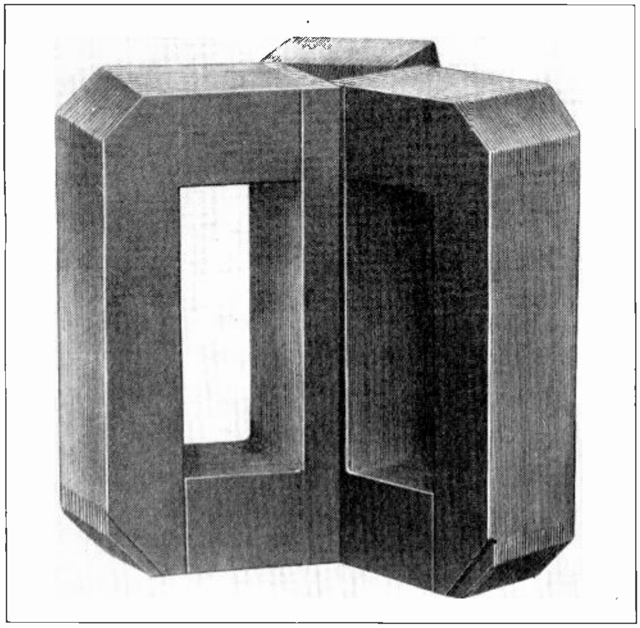

Fig. 101. The above photo shows a complete core of the three-sided type for a distributed core transformer. (Photo Courtesy General Electric Co.)

manner in which the laminations are overlapped at the corners of the core, in order to provide a good magnetic path of low reluctance.

110. TRANSFORMER WINDINGS

Transformer coils are wound with insulated copper wire, some of the smaller sizes being wound with round wire while square or rectangular wire is used for practically all of the medium and larger sized units.

The square and rectangular wires form a more compact and solidly built coil and also provide better conductivity for the heat to flow out of the windings. The coils are usually built up in a number of carefully wound layers and each layer is well insulated from the preceding and following ones.

It is only in a few types of very small transformers that the coils are wound directly on the core legs. In practically all medium-sized and larger transformers the coils are form-wound and then slipped over the legs of the transformers core before the core is completely assembled.

The coils, after being wound, are thoroughly dried by being heated in ovens and are then dipped in hot insulating compound to thoroughly insulate every turn from the adjoining turns.

In many cases the dipping or impregnating process is performed in air-tight tanks, so that the coil can first be subjected to a high vacuum to draw out every bit of moisture and air from the windings. The hot insulating compound is then applied under pressure to force it into every crevice and space in the turns of the winding.

The coils are then thoroughly baked to dry out and harden the insulating compound so it will present a smooth, hard surface and prevent moisture, dust, and dirt from getting into the windings during operation of the transformer.

After the coils are thoroughly insulated and baked, they are placed upon the well-insulated legs of the iron core. The core insulation consists of several layers of fiber or fish paper; or, in some cases on the higher voltage units, it consists of a special bakelite or composition tube.

Fig. 102 shows the partly assembled core for a distributed-type transformer, and the primary and secondary coils ready to be set in place over the center leg of this core as soon as it is insulated. The primary coil, shown in the center of this figure, is built up of several layers which have been form-wound and then thoroughly insulated by a wrapping of tape. The secondary winding, shown on the right, is built up of a number of separate coils, each of which is well insulated from the others.

These coils are then connected in series to form a complete high-voltage winding. This type of construction provides better separation and insulation of the sections of the secondary winding, between which very high voltages exist.

A heavy layer or tube of high-grade insulation is also placed between the low tension and high tension windings to prevent a flash-over from the high-voltage winding to the low-voltage coil.

After the L.T. and H.T. coils are in place on the core, they are securely wedged and anchored, to prevent any possible moving or distortion due to heavy magnetic stresses set up around the coils when the transformer is loaded, or during the possible occurrence of short-circuits.

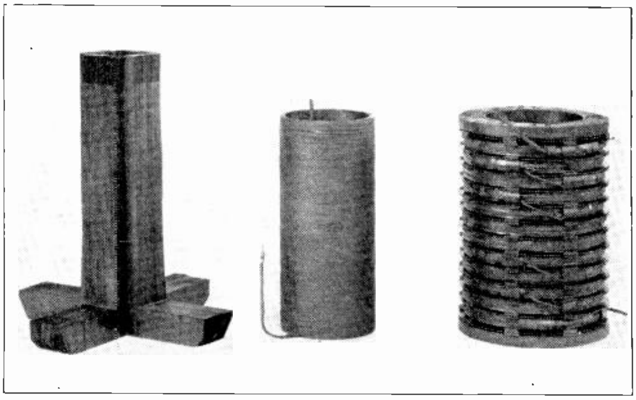

Fig. 102. This view shows a partly assembled core of the distributed type and the primary and secondary windings which are ready to be placed on the core. (Photo Courtesy General Electric Co.)

Fastening the coils securely in place also prevents them from rubbing against the core and having their insulation damaged by the slight vibration which is set up by the alternating fluxes in the core laminations.

Fig. 103 shows a completed transformer element with the windings in place on the core, the laminations of the outer and top sides of the core having been assembled after the windings were placed on the center leg. The whole core is then securely clamped by means of bolts to prevent excessive vibration of the laminations.

If these laminations are not clamped tightly together, the reversing magnetic fluxes will cause them to vibrate excessively and create a great deal of noise during the operation of the transformer. Loose laminations might also chafe the insulation of the windings.

In Fig. 103 you may also note the manner in which the leads are connected to the coils and brought up to a terminal plate of porcelain or insulating material. The heavy, stiff, copper leads are then carried on up to the point where they leave the tank or transformer case.

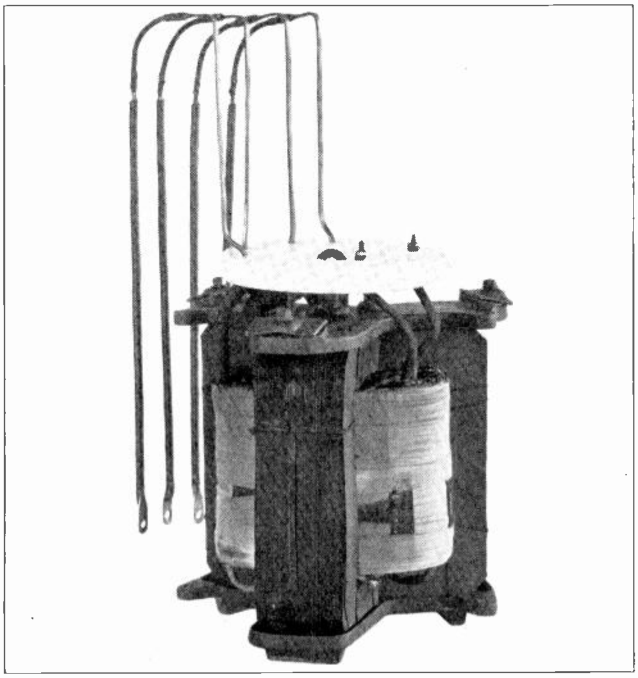

Fig. 103. Complete transformer core and windings. Note how the legs of the core are assembled to form complete magnetic paths around the coils. (Photo Courtesy General Electric Co.)

Fig. 104 shows another transformer winding, consisting of form-wound coils assembled in several layers. These layers are separated or spaced from each other by strips of wood, the ends of which can be seen around the left end of the winding. This type of construction not only insulates the sections of the coil from each other, but also provides spaces for the circulation of the cooling air or oil to carry away the heat from the inside of the winding more easily.

A winding built up of a number of separate layers or sections in this manner may have these sections connected either in series or parallel, according to the voltage and current capacity desired from the transformer.

111. SINGLE-PHASE AND POLYPHASE TRANSFORMERS

The transformers we have so far considered and shown in the figures have been of the single-phase type. Transformers are also made in polyphase types, as shown in Fig. 105. This photo shows a complete three-phase transformer element with the primary and secondary windings of each phase located on a separate leg of the core.

From this it is easy to see that a three-phase transformer is simply a combination of three single-phase transformers all assembled on one core. The low voltage windings of the transformer shown in Fig. 105 are inside the high voltage coils and next to the core legs. The high voltage coils which are placed over the others can be clearly seen in this view. Note carefully the manner in which the separate sections of the coil are insulated from each other, and also the insulating barriers placed between the three coils to prevent a flash-over from one winding to the next. The leads for connecting the coils to the line are shown carefully taped and marked, and brought up to separate insulating supports above the core.

A three-phase transformer requires less core material than three single-phase transformers of the same capacity. This is due to the fact that in the three-phase transformer the magnetic fluxes of each phase use the same core at alternate periods as the alternations and fluxes of each phase occur 120° apart. Therefore, the advantages of polyphase transformers are: that they require less core material; are lighter in weight; and occupy less floor space in a power plant or substation than three single-phase transformers of the same capacity.

One of the disadvantages of a polyphase transformer is that, in case of trouble or breakdown in the insulation or windings, all three phases must be cut out of service for repairs; while, in the case of single-phase transformers, the one defective unit can be disconnected for repairs, and service can be maintained to the customers either by substituting another single-phase unit or by a special open-delta

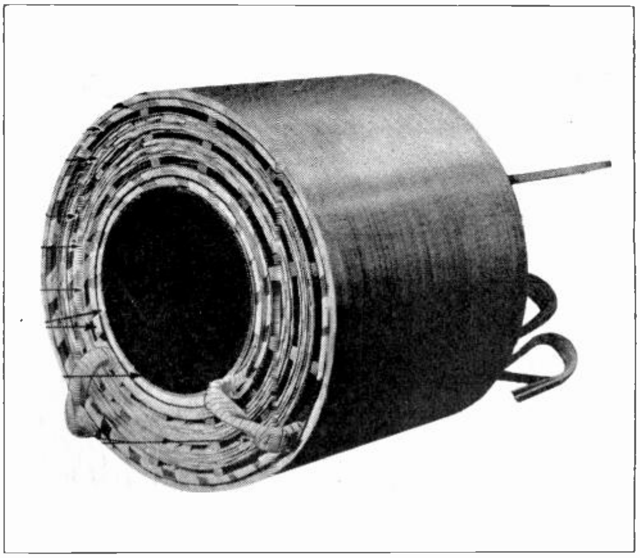

Fig. 104. This view shows a transformer winding which is built up in layers that are spaced apart with wood strips to allow circulation of cooling oil through the winding. (Photo Courtesy General Electric Co.)

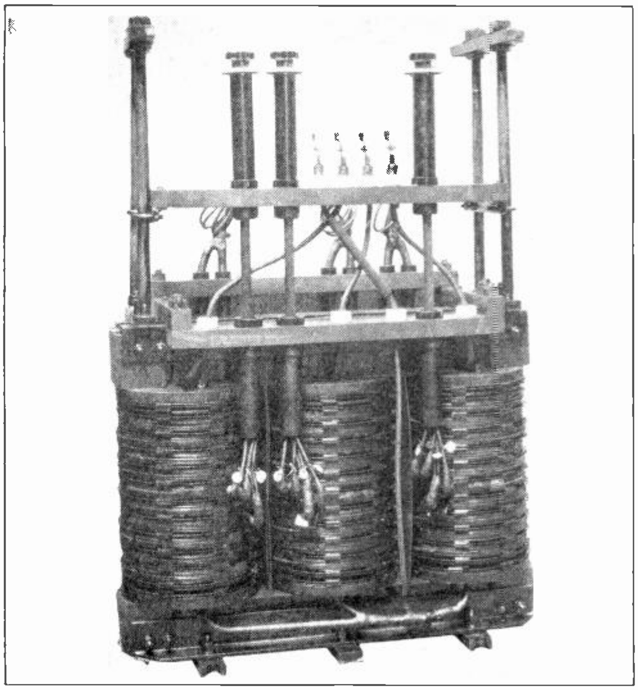

Fig. 105. Complete three-phase transformer core and windings ready to be placed in the tank and covered with oil. (Photo Courtesy General Electric Co.)

connection to the remaining two units. This connection will be explained in later paragraphs.

In modern transformers, however, the construction and insulation of the coils is such that under ordinary operating conditions there is very little chance of breakdown or failures.

112. TRANSFORMER LOSSES

Although transformers are very efficient devices, they have certain small losses which take place within their windings and cores during operation. These losses are commonly referred to as **copper losses** and **core losses.**

The copper loss is due to resistance of the coils, which causes a certain amount of the energy to be transformed into heat within the windings. This loss is proportional to the square of the current in the windings, and is therefore approximately zero at no load and maximum at full load.

The core loss consists of eddy current losses and hysteresis losses which are set up in the core by the reversing magnetic flux. Eddy currents, you will recall, are low-voltage short-circuited currents which are caused to flow in various areas of the core by the magnetic lines of force cutting across the core in varying intensities. These eddy currents are reduced and kept at a minimum by the laminated construction of the core; but the small amount which still exists, even in the best core construction, will cause a certain amount of heat to be developed in the iron.

Hysteresis loss is due to the reversal of the magnetic charges of the molecules of the iron as the alternating flux constantly reverses in the core. This loss also tends to produce a certain amount of heat in the core.

The core losses remain approximately the same at no load or full load of the transformer, because they are always proportional to the magnetizing current and flux.

These losses and tests to measure them will be more fully discussed in later paragraphs of this section.

113. TRANSFORMER COOLING

In a transformer which is operating under full load, a considerable amount of heat is produced by the copper and core losses. This heat must be removed and carried away from the windings and core, because if it were confined and stored up within them it would soon cause the temperature to rise so high that it would burn or damage the insulation of the windings.

Transformers must also be kept cool to maintain their high operating efficiency, because the resistance of the copper in the windings increases with the temperature increase and thereby increases the I^2R loss.

In very small transformers, such as bell-ringing and toy transformers, instrument transformers, etc., the heat is carried away by the natural circulation of air around the core and windings.

On larger power transformers some additional means of cooling the windings must be provided. Transformers are often classified according to their methods of cooling, as follows: **natural air cooled, forced air-blast cooled, oil cooled,** and **oil and water cooled.**

Natural air cooling is used only in the smaller types, as previously explained.

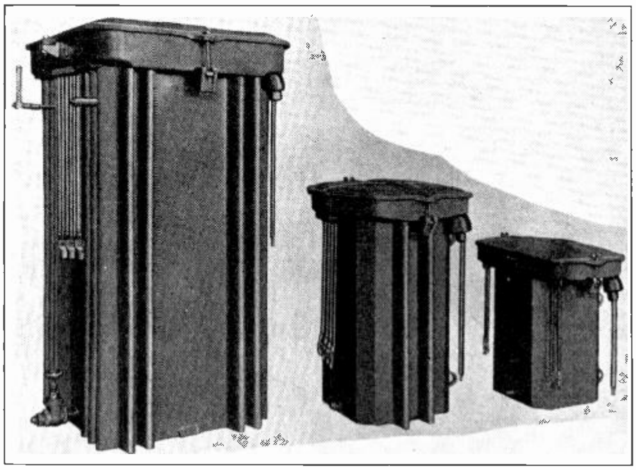

Fig. 106. This view shows three different sizes of common power transformers. Note the cooling flanges or ribs in the tanks of the two larger ones. (Photo Courtesy General Electric Co.)

114. AIR-BLAST COOLING OF TRANSFORMERS

Transformers that are cooled by forced air circulation have their core and windings enclosed in an iron case or jacket which is open at the bottom and top. Clean, dry air under low pressure is forced upward through the windings and, in this manner, carries away the heat much more rapidly than natural air-circulation would.

The air for cooling transformers of this type is supplied by motor-driven fans and is usually fed to the transformers through an air passage or chamber which runs under the floor on which the transformers are located.

Air passes up through the transformers and exhausts, into the room in which they are located, escaping through open windows or air-vents in the building.

Quite often a small ribbon or cord is attached to the top of the transformer casing, directly in the exhaust air system, so that it will be blown upward and kept fluttering in the air. This provides an indication of failure of the air supply.

It is very important that the air be kept circulating at the proper rate through transformers of this type or otherwise they would quickly overheat.

The air intake for supplying fresh air to air-blast transformers should be located where it will not draw any moisture or dust, as either of these would quickly deteriorate the insulation on the transformer windings, and dust would tend to clog the air passages between and around the coils.

Very often a cloth screen is placed over the air intake to stop the passage of fine dust and a certain amount of moisture.

115. OIL-COOLED TRANSFORMERS

The common oil-cooled transformers of the small and medium sizes have their cores and windings immersed in a tank of insulating oil. This is by far the most common type of transformer in use.

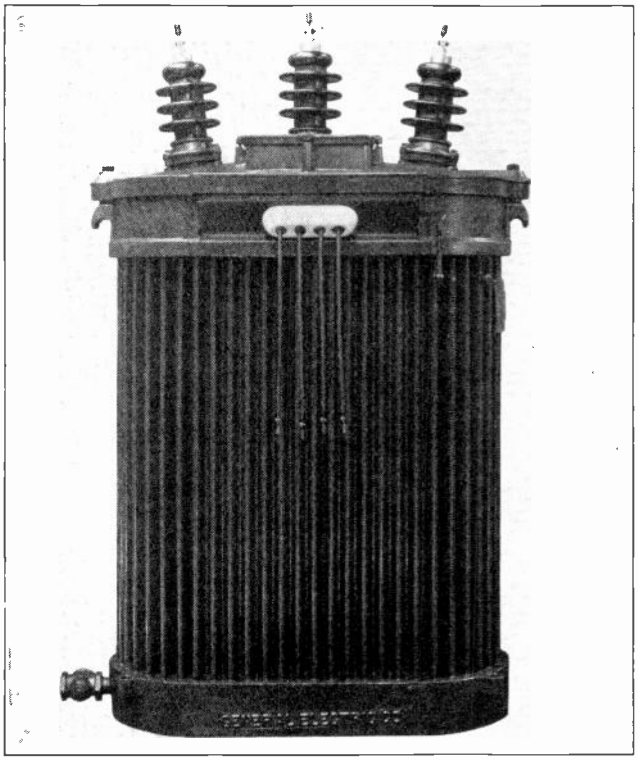

Fig. 107. Three-phase power transformer for high voltage operation. Note the large insulating bushings and also note the manner in which the entire tank is corrugated to provide a greater heat-radiating surface.

The oil, which is of a special grade known as transformer oil, not only serves as a cooling agent for the windings and core, but also serves as an excellent insulation between the layers of the winding and the core.

This oil flows into all crevices and passages between the windings and conducts the heat through the liquid to the metal tank, from which it is given off to the outside air.

Fig. 106 shows several transformers of the oil-cooled type, the capacities of which, from left to right, are: 150 kv-a., 37½ kv-a., and 15 kv-a. The tanks of these transformers are made of either cast iron or pressed steel. The pressed steel tanks are much lighter in weight and more durable mechanically; because, if they are dropped or bumped, it will usually only dent the tank instead of cracking it, as often occurs with cast iron.

On the small sizes of transformers, the tanks usually have a plain, flat surface on each side, as shown on the 15 kv-a. unit at the right in Fig. 106. On the larger sizes, the sides of the tank are usually corrugated or provided with projecting fins as shown on the two larger transformers in this figure. This construction greatly increases the area or surface of the metal which is in contact with the air, and thus enables the air to absorb and carry away the heat from the tank much more rapidly.

Note the manner in which the coil leads are brought out of the transformer case through insulating bushings, which are usually made of porcelain. The cases are equipped with covers which can be removed for inspection of the windings or for changing the connections at the terminals inside. These covers are provided with a washer or gasket around their edges so that, when they are clamped securely in place by the bolts and nuts shown in the figure, they seal the transformer tightly and keep out practically all dirt and moisture.

Transformers of this type and smaller, ranging down to 1 kw. in size, are the types commonly seen on poles throughout the cities and in many rural districts. They are used to step the voltages of the transmission or distribution lines down to that used in homes for lighting or in shops for power purposes.

Fig. 107 shows a complete three-phase transformer which has the entire surface of the case deeply corrugated to provide sufficient cooling area. The high-tension winding of this transformer is constructed for 25,000 volts, and you will note the much larger insulating bushings through which the high-voltage leads are brought out at the top of the case.

You will note also that the transformer cases shown in these figures are provided with drain plugs or valves at the bottom, so that the oil can be drained out and replaced whenever it becomes dirty or has absorbed too much moisture.

During operation throughout a period of several months or longer the oil will often absorb a little moisture, and the presence of even very slight amounts of water in the oil greatly reduces its insulating qualities. It is therefore necessary at times to replace or dry out this oil. This will be more fully covered later under Care and Maintenance of Transformers.

116. COOLING TUBES OR RADIATORS

On very large power transformers, ranging from 300 kv-a. to 10,000 kv-a. and up, the cases are usually provided with a number of pipes or tubes on the outside, as shown in Fig. 108. Some smaller transformers are equipped with these cooling tubes, if they are to be located in places where it is difficult to cool them otherwise. These tubes connect to the top and bottom of the tank and allow the oil to circulate through them from top to bottom, by the natural movement of the oil caused by its being heated inside the transformer and cooled in the tubes.

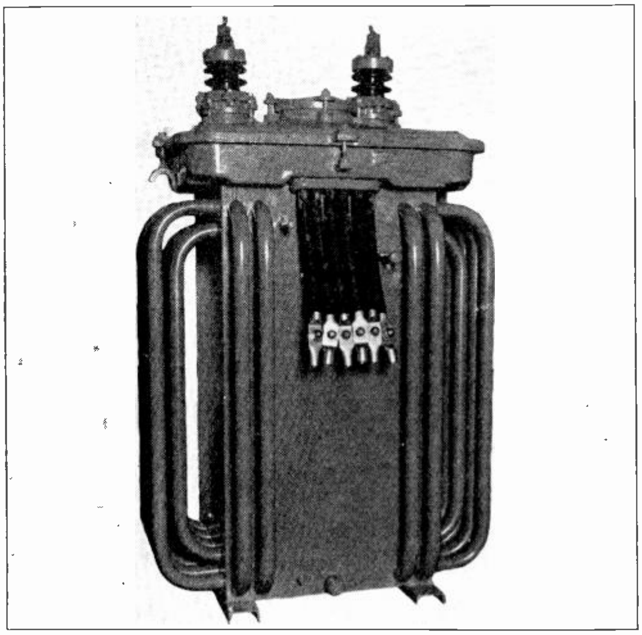

Fig 108. This transformer is equipped with cooling tubes to allow the oil to circulate outside of the tank and give off its heat more rapidly to air.

The heated oil around the transformer coil and windings tends to rise to the top and pass out of the tank into the top ends of the tubes. In the tubes it is cooled off more rapidly, as they are completely surrounded by air, and the oil is thus caused to flow to the bottom of the tubes and back into the transformer.

The oil is kept continually circulating in this manner by the thermosiphon principle just explained.

Fig. 109 shows a bank of three large single-phase power transformers, each of which has a capacity of 30,000 kv-a. These transformers have a high-voltage winding which produces 220,000 volts. Note the very large insulating bushings through which the high voltage leads are taken out to the line.

These transformers are equipped with groups or sets of cooling fins or tubes which are commonly called radiators and are clearly shown in this photo. These sets of cooling fins are adjustable to take advantage of spacing of the transformers and the air currents around them. They are also removable for cleaning.

The cooling of this type of transformer is sometimes further improved by directing a blast of air against these cooling fins by means of motor-driven fans and sheet metal tubes to direct the air through the cooling fins.

117. OIL AND WATER COOLED TRANSFORMERS

In some cases, where it is difficult to sufficiently cool transformers by means of natural oil circulation through cooling tubes, oil and water cooled transformers are used. In transformers of this type a coil of copper tubing or pipe is located in the oil, above the core and windings.

Cold water is then circulated from the outside through this copper piping and rapidly absorbs the heat from the top level of the oil, which is always the hottest in any transformer. Fig. 110 shows a transformer equipped with a cooling coil of this type.

The heat passes easily through the copper tubing because copper, as you will recall, is a good conductor of heat. The heat is thus absorbed by the water and continually carried away by the new supply of cool water which is circulated constantly through the cooling coil, by a pump or by a connection to a local water supply system.

118. AUXILIARY OIL TANKS AND BREATHER PORTS

In Fig. 109 you will note a special oil tank or reservoir mounted on top of each of the transformers. This tank, which is commonly called an **oil conservator**, is used to maintain the oil level above the top of the main tank and thereby keep the transformer tank completely filled with oil and exclude all air from it.

The smaller outside tank, which is only partly filled with oil, provides the necesary air space to allow for expansion of the oil in the main tank with increased temperature during increases of load. This type of construction also exposes a much smaller area of the top surface of the oil to the air, and thereby reduces the amount of moisture that the oil will absorb in a given time.

In some cases the transformers are provided with a breather port or opening which allows the air to pass in or out of the tank, during expansion and contraction of the oil with temperature changes. This breather can be equipped with a filter of calcium chloride through which the air must pass.

Calcium chloride has a great affinity or attraction for water and therefore absorbs practically all mois-

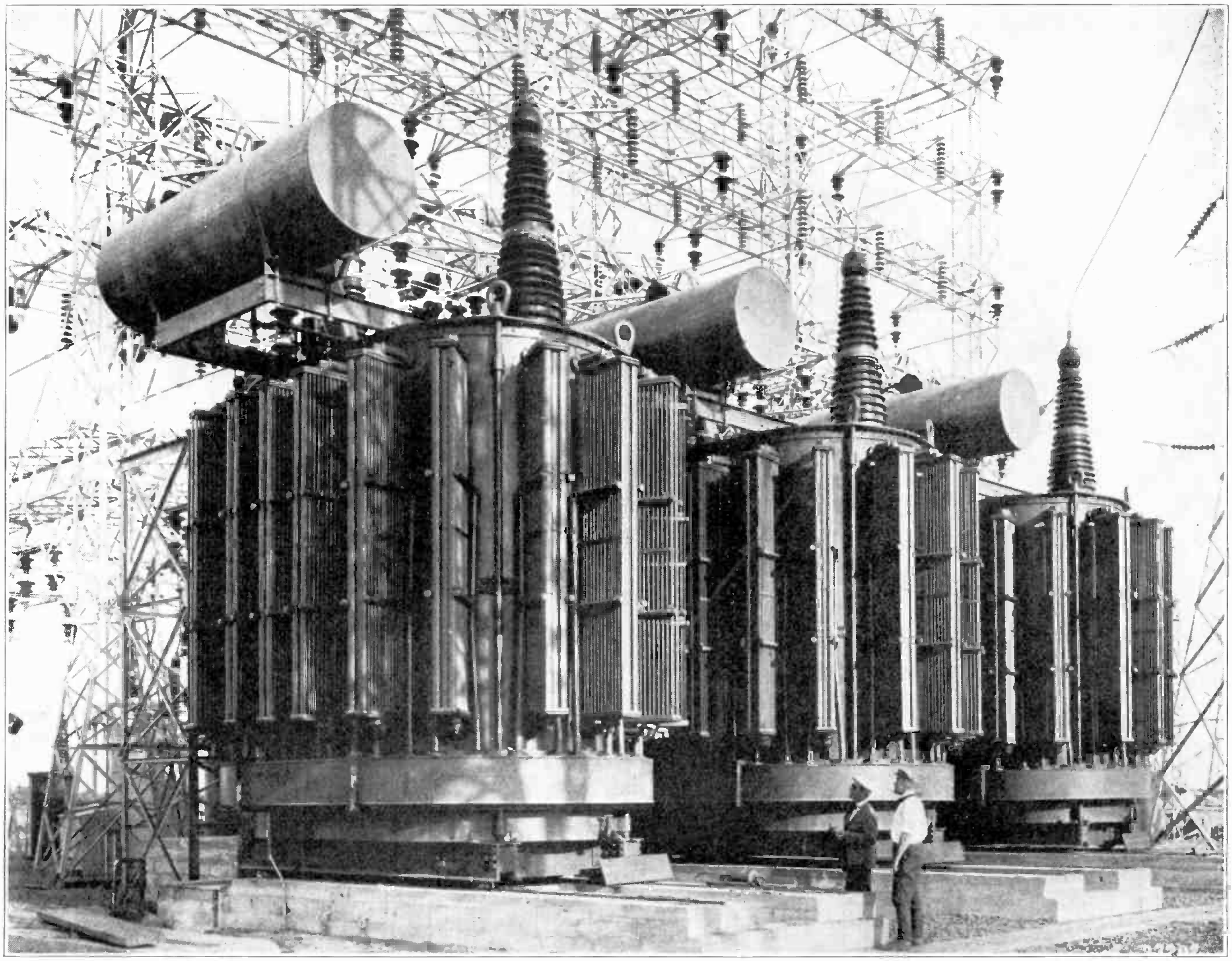

Fig. 109. This photo shows a bank of large power transformers in the foreground and the structure of a high voltage switching station in the background. Note the cooling radiators on the sides of the transformer tanks and also the large insulating bushings which are used for the 220,000-volt leads. Transformers of this type are used in connection with high voltage transmission lines to step the voltage up or down at the receiving end of the line. (Photo Courtesy General Electric Co.)

ture from the air before it is allowed to enter the transformer.

119. TRANSFORMER OPERATING TEMPERATURES

Transformers are commonly designed to withstand temperature increases of 55° C. to 75° C. above normal temperature. This variation in maximum operating temperatures is due to the different classes of insulation which are used.

Transformer windings which are insulated with impregnated cotton, silk, and paper cannot be operated at such high temperatures as those which are insulated with mica and other special insulating compositions.

Practically all large transformers are provided with thermometers which indicate the operating temperatures at all times. When operating or caring for transformers which use forced air or circulating water in their cooling, it is very important to regulate the air and water so that the maximum temperatures for which the unit is designed will not be exceeded.

It is also well to remember always that the temperature ratings of electrical machinery are commonly given in the centigrade scale.

When we say that a transformer is allowed to operate at 55 degrees centigrade above normal temperature, its temperature is considerably higher than 55 degrees Fahrenheit. The centigrade scale has its zero point at 32 degrees on the Fahrenheit scale, and its 100-degree point is at 212 degrees Fahrenheit. One degree of the Fahrenheit scale is equal to only 5/9 of a degree centigrade.

So, to determine the value in degrees F. of any certain temperature above freezing, which is expressed in degrees C., we can use the following formula, or rule:

$$\text{Temp. F.} = (\text{C}^\circ \times \frac{9}{5}) + 32$$

Or, to determine the C. temperature of a certain F. value, we can use the formula:

$$\text{Temp. C.} = (\text{F}^\circ - 32) \times \frac{5}{9}$$

Keep in mind that these particular formulas apply only to temperatures above freezing.

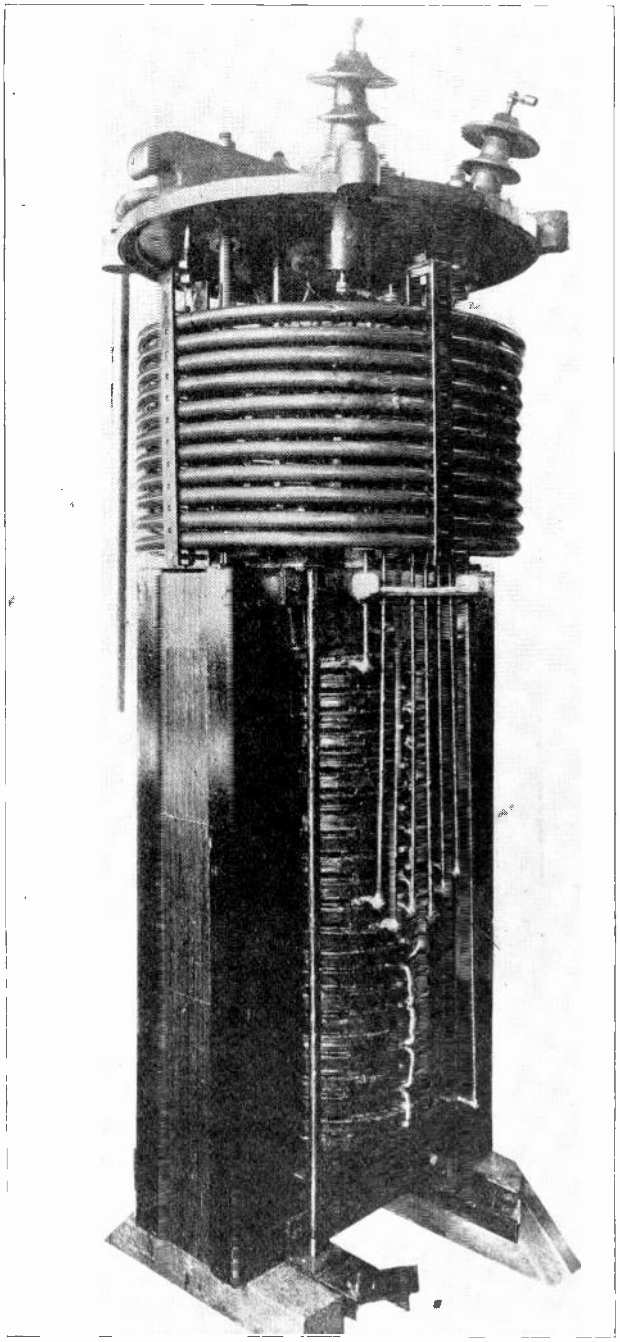

Fig. 110. This view shows a single-phase power transformer equipped with a coil of copper tubing through which water is circulated to cool the transformer and the oil which surrounds it.

Fig. 111 gives a convenient table of comparative temperature values in both the centigrade and Fahrenheit scales. From the table we can quickly find that 55° C. is equal to 131° F., and 75° C. is equal to 167° F., etc.

120. SPECIAL TEMPERATURE AND LOAD INDICATOR DEVICE

For small and medium-sized transformers which are to be mounted upon poles, a device known as a **thermotel** is often used to indicate when the transformers are overloaded or operating at too high temperatures. This device can be read from the ground and therefore does not necessitate climbing the pole to determine the operating temperature of the transformer.

Fig. 112 shows a photograph of a thermotel unit which is equipped with an extension to be inserted under the cover of the transformer tank. These devices operate by the expansion of a liquid in a tube immersed in the oil. When the oil becomes heated the liquid expands and increases the pressure on the walls of a thin, curved, metal tube attached to the pointer of the device.

The increased pressure tends to straighten out the tube and thereby causes the pointer to move across the scale a certain distance, in proportion to the temperature of the transformer oil.

As this temperature is proportional to the amount of load, the scale of the thermotel can be marked so that the pointer will indicate the percentage of load or overload at which the transformer is operated.

If the transformer is overloaded and the pointer is caused to move beyond the 100% load mark, it trips a white vane or semaphore which falls into view in the window of the device. This indication is clearly visible to an inspector on the ground and shows that the transformer has been overloaded. These devices are exceptionally convenient because they can be read from the ground and can be installed on a transformer by simply hanging over the edge of the transformer case a hook-like extension which carries a tube of liquid.

Cent.	Fahr.	Cent.	Fahr.	Cent.	Fahr.	Cent.	Fahr.	Cent.	Fahr.
-40	-40	15	59	70	158	150	302	800	1472
-35	-31	20	68	75	167	160	320	900	1652
-30	-22	25	77	80	176	170	338	1000	1832
-25	-13	30	86	85	185	180	356	1200	2192
-20	-4	35	95	90	194	190	374	1400	2552
-15	+5	40	104	95	203	200	392	1600	2912
-10	+14	45	113	100	212	300	572	1800	3272
-5	+23	50	122	110	230	400	752	2000	3632
0	+32	55	131	120	248	500	932	2200	3992
+5	+41	60	140	130	266	600	1112	2400	4352
+10	+50	65	149	140	284	700	1292		

Fig. 111. This convenient table gives the comparative temperature values in degrees centigrade and Fahrenheit. With this table it is easy to convert the degrees centigrade from the rating or temperature of any electrical equipment into degrees of the Fahrenheit scale.

121. INSULATING BUSHINGS

Where the primary and secondary leads of the transformer coils are brought out of the tank or case for connection to the line, these leads must be carefully insulated from the metal case, in order to prevent flash-overs and grounding of the circuit.

On low-voltage transformers, ranging from 110 to 2300 volts, the insulated wires are brought out through small procelain bushings or collars, as shown in Fig. 106. On transformers operating at voltages from 2300 to 33,000 volts, much larger porcelain bushings are used. These bushings are equipped with flanges or petticoats to increase the creepage or flash-over distance which an arc would have to travel in order to jump from the lead-in wire to the tank.

Bushings of this type are shown on the high-voltage terminals of the transformers in Figs. 107 and 108. The low-voltage leads on both of these transformers are brought out through the ordinary small porcelain bushings.

On transformers operating at voltages from 50,000 to 220,000 volts or more, special oil-filled porcelain bushings or condenser-type bushings are used. The high-voltage bushings on the 22,000-volt transformers shown in Fig. 109 are of the oil-filled porcelain type. The porcelain of these bushings is hollow and is filled with oil, which is separated into layers by a number of thin insulating tubes.

High-voltage bushings of this type have a metal rod extending through them from one end to the other, to serve as a conductor. The coil and line leads are connected to the top and bottom ends of this rod by means of bolts or threaded connections.

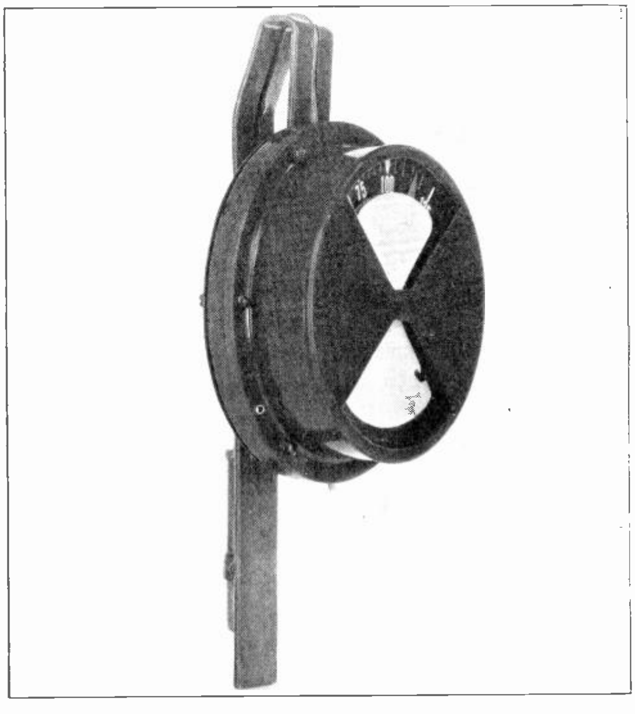

Fig. 112. This photo shows a temperature-indicating device for use with pole type transformers. This device is called a thermotel and indicates both excessive temperatures and overload of a transformer on which it may be installed.

The condenser-type bushing consists of a number of alternate layers of insulation and metal foil wrapped tightly around the conductor rod. The reason for using layers of metal foil in a bushing of this type, instead of using solid insulation, is that the metal distributes the voltage stress more evenly over the entire surface of the insulation layers and thereby reduces the tendency to puncture at one spot near the iron tank of the transformer.

Fig. 113 shows a polyphase transformer removed from its tank, but with the cover in place so the lower ends of the insulating bushings can be seen. The smaller bushings in the front are those of the low-voltage leads and the larger bushings in the rear are those of high-voltage leads.

You will also note that the connecting lead between the two outer windings is carried across through a special tube of insulating material, to prevent flashing over to the center coil.

Power transformers are built in voltages ranging from 110 to 220,000, while special testing transformers used in research and laboratory work are built to develop voltages as high as 250,000 or more from one unit.

A number of these transformers can be connected in series or **cascade** connection to obtain potentials as high as several million volts. Voltages of this order are used in making flash-over and puncture tests on line insulators, transformer bushings, high-voltage cables, etc. They are also used for determining the effects of lightning on transmission line equipment, electrical machinery, and buildings. Fig. 114 shows a demonstration of an arc from the high-voltage transformers which can be seen in the right rear of this photo.

Special industrial transformers are made to step voltages down as low as 1 or 2 volts and to produce

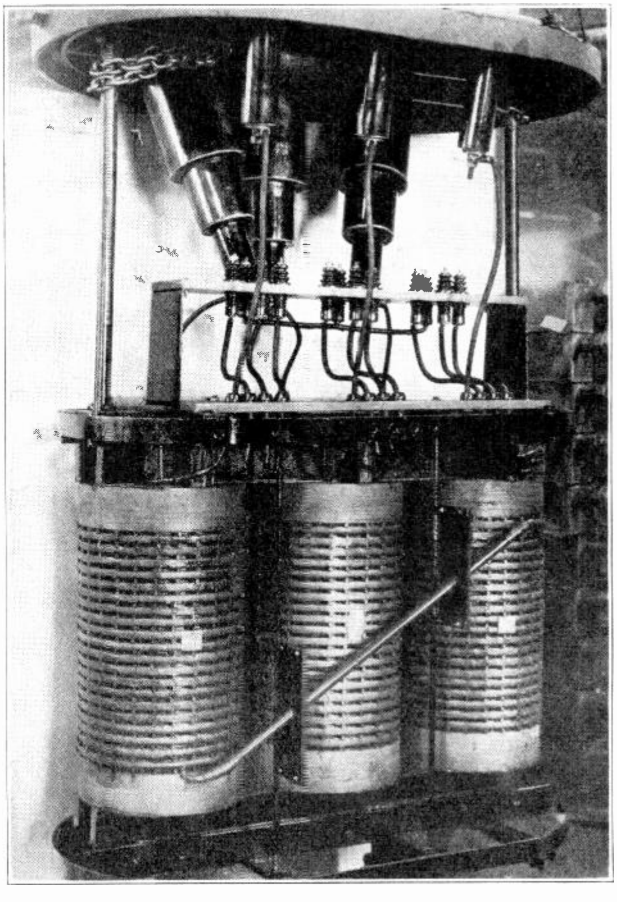

Fig. 113. This view shows the core and windings of a high voltage, three-phase transformer and also the lower ends of the insulating bushings through which the high voltage and low voltage leads are taken from the tank.

many thousands of amperes from very low voltage secondary windings, to be used in butt welding, spot welding, etc.

Transformers are always rated in kv-a. and are built in sizes from a fraction of one kv-a. to 40,000 kv-a. or more.

122. TRANSFORMER PRINCIPLES

When the primary winding of a transformer is excited with alternating current, the powerful magnetic field which is set up around this winding and through the core will cut across the turns of the secondary winding as the flux expands and contacts with the variations and reversals of the current in the primary winding.

As this flux cuts back and forth across the turns of the secondary winding, it induces a voltage in each of these turns by the principle of electro-magnetic induction which has already been explained.

As the induced voltage in the secondary coil depends upon the movement of the primary flux, and as this flux moves in synchronism with the alternations of the primary current, the secondary current will always be of the same frequency as that in the primary.

The secondary current will, however, always be approximately 180° out of phase with the primary current. This is due to the fact that the most rapid change of primary flux occurs during the period when the primary alternations are passing through or near their zero values, as was shown with the sine curves in Section One of Alternating Current.

It is at this point of most rapid flux change that the maximum voltage is induced in the secondary; therefore, the maximum secondary voltage occurs approximately 90° later than the maximum primary current.

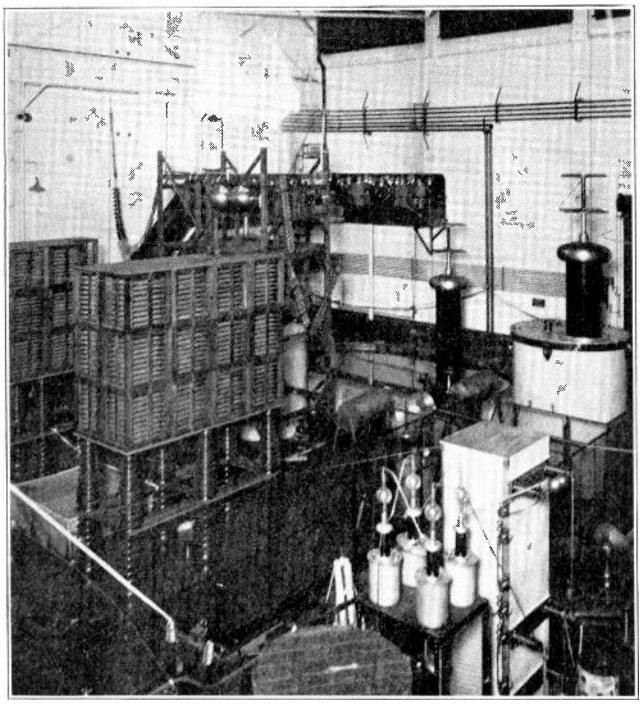

Fig. 114. The above photo shows a high voltage test room at the plant of the General Electric Company. Transformers in this room are capable of producing over one million volts and an enormous arc produced by this voltage can be seen above the sphere gap and condenser slightly to the left of the center of the picture.

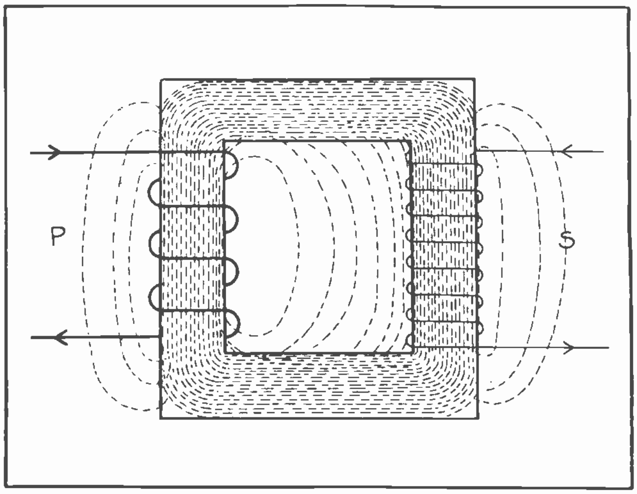

Fig. 115. This sketch illustrates the operating principle of a simple transformer and shows the manner in which the primary flux passes through the core and induces voltage in the secondary winding.

As a transformer winding is highly inductive and has very little resistance, the secondary current will lag approximately 90° behind the induced secondary voltage. Thus, the secondary current is approximately 180° behind the primary current. This is a very good point to remember because it means that when the current flows through the primary coil in one direction, as shown by the arrows in Fig. 115, it will be flowing in the opposite direction through the secondary coil.

Therefore, if the primary and secondary coils are wound alike, the voltage polarities produced at the ends of the secondary coil will be opposite to those applied to similar ends of the primary coil.

You will note in Fig. 115 that, while the greater part of the magnetic flux set up by the primary follows the iron core, a certain amount of this flux will be set up around the windings outside of the core and also across the opening between the core legs. This is called **leakage** flux and is considerably greater at full load of the transformer than at no load.

123. TRANSFORMER RATIOS AND SECONDARY VOLTAGES

In a simple transformer, all of the turns of the secondary coil are in series with each other, so their induced voltages will add together and the voltage at the terminals of the secondary winding will be the sum of the voltages induced in all the turns.

Therefore, the greater the number of turns in the secondary winding of any transformer, the higher will be the voltage induced in this winding.

From this, we find that in any transformer the amount of voltage change, or the ratio between the primary and secondary voltages, will be proportional to the ratio between the number of turns in the primary and secondary windings.

For example, if the primary winding of the transformer shown in Fig. 115 has fifty turns and the secondary winding has one hundred turns, the transformer will be a step-up transformer with a ratio of one to two.

The first figure of a transformer ratio always refers to the primary and the second figure to the proportional number of turns in the secondary.

If, in another case, we have a step down transformer with a primary winding of 1000 turns and a secondary winding of 100 turns, the ratio of this transformer would be expressed as 10:1; and if we were to apply 2200 volts to the primary winding, 220 volts would be produced by the secondary winding.

From these illustrations we can see that the following formula applies:

$$\frac{\text{Primary turns}}{\text{Secondary turns}} = \frac{\text{Primary voltage}}{\text{Secondary voltage}}$$

or, in the case of the transformer just mentioned,

$$\frac{1000}{100} = \frac{2200}{220}$$

If we know the ratio between the number of turns on the primary and secondary windings of any transformer and know the amount of primary voltage which is applied, we can easily determine the secondary voltage, because it will bear the same relation to the primary voltage as the number of secondary turns bears to the number of primary turns.

To find the secondary voltage of either a step-up or step-down transformer, **divide the primary voltage by the ratio of primary to secondary turns,** or in other words,

Secondary E = (Primary E × last figure of ratio) ÷ first figure of ratio.

For example, if a step-up transformer with a ratio of 1 to 10, has 100 volts applied to its primary, the secondary voltage will be (100 × 10) ÷ 1, or 1000 volts.

If, in another case, a step-down transformer with a ratio of 20 to 1 has 2200 volts applied to its primary, the secondary voltage will be 2200 × 1) ÷ 20, or 110 volts.

The formula for finding the approximate secondary current is as follows:

Sec. I = (Pri. I × first figure of ratio) ÷ last figure of ratio.

124. POWER OUTPUT OF TRANSFORMERS

If a transformer were 100% efficient, the amount of power in kv-a. that would be obtained from the secondary would always be the same as that supplied to the primary, regardless of the amount that the voltage might be stepped up or down.

Of course, no transformer can be 100% efficient, but the efficiency of large power transformers is so high that for simple illustrative problems we may ignore the slight loss.

If a step-up transformer produces a secondary voltage ten times as high as the voltage applied to the primary, then the full load current in the secondary winding will be just one-tenth of that in the primary winding.

For example, if a 10 kv-a. transformer with a ratio of 1 to 10 has 200 volts and 50 amperes applied to its primary and increases the voltage to ten times higher, or 2000 volts on the secondary, the full load secondary current will then be 5 amperes.

If we multiply the volts by the amperes in each case, we will find the same number of volt-amperes or kv-a. in the secondary as in the primary. The primary voltage times primary current will be:

200 × 50 = 10,000 volt-amperes, or 10 kv-a.

The secondary volts times the secondary amperes will be:

2000 × 5 = 10,000 volt-amperes, or 10 kv-a.,

as before.

From this, it is evident that the high-voltage winding of any transformer can be wound with correspondingly smaller wire, according to the ratio between the high-voltage and low-voltage windings. Therefore, the high-tension winding of any transformer is always the one with the smaller wire and the greater number of turns; while the low tension winding is the one with the larger wire and the smaller number of turns.

This has been mentioned previously but it is repeated here as a reminder of a very simple way to determine which is the high-voltage coil and which is the low voltage coil of any transformer.

As power factor doesn't enter into the kv-a. rating of a transformer or into the calculations for volt-amperes, it is a simple matter to find the current rating of any transformer winding merely by dividing the volt-amperes by the voltage of that winding.

To obtain the volt-amperes, remember, it is only necessary to multiply the kv-a. rating by 1000, as one kv-a. equals 1000 volt-amperes.

One volt-ampere is the same as one watt of apparent power. For example, if we have a 10 kv-a. transformer with a ratio of five to one, and a primary voltage of 550, the secondary voltage would be 110 volts. If we multiply the kv-a. rating of 10 by 1000, we get 10,000 volt-amperes. The primary current will then be 10,000 ÷ 550, or 18.2 amperes, and the secondary current will be 10,000 ÷ 110, or 91— amperes.

If the power factor of a transformer were 100%, we could obtain the same number of actual kw. of true power as the kv-a. rating of the transformer. However, the power factor of a transformer and its attached load is usually much lower than 100%, so it is often possible to have a 10 kv-a. transformer fully loaded and yet supplying only 5 to 8 kw.

This is the reason transformer capacity is always rated in kv-a.

125. EFFECT OF SECONDARY LOAD CURRENT ON PRIMARY CURRENT

When a transformer is operating idle, that is, connected to the line but having no load connected to the secondary, only a very small amount of current will flow in the primary winding. This current is called the **magnetizing current** and is just the amount required to strongly magnetize the core.

As long as a transformer is not loaded, the lines of force of this very strong field set up by the magnetizing current are constantly cutting across the turns of the primary winding and thereby inducing a counter-voltage which is very nearly equal to the applied voltage. This limits the current flow to a very small amount.

As soon as the load is connected to the secondary, the primary current will automatically and immediately increase in proportion to the amount of this load. If the secondary is fully loaded, the primary current immediately comes up to full load value. If the secondary is overloaded the primary will also be overloaded, and it is thus possible to burn out the primary or both the primary and secondary windings by connecting too much load to the secondary of any transformer.

This automatic variation in the current taken by the primary whenever the load on the secondary is changed, is caused by the reaction of the secondary flux on the flux of the primary coil. When there is no load connected to the secondary winding there will, of course, be no current flowing through it, even though full voltage is induced in this winding. As soon as its circuit is closed by connecting some load to the secondary leads, current starts to flow through this winding and sets up a magnetic field around it.

We recall that the current in the secondary winding is always 180° out of phase or in the opposite direction to that in the primary; therefore, the magnetic flux set up by the secondary is in the opposite direction to the primary flux in the core.

This secondary flux neutralizes a certain amount of the primary flux and reduces the number of lines of force which are cutting across the primary turns. This reduces the counter-voltage set up in the primary and allows more current to flow through it.

The resistance of the primary winding is so low as to be almost negligible, so the transformer depends largely upon the counter-voltage of self-induction to limit the current flow through this winding.

If the secondary load is increased to such an extent that the flux of its currents almost entirely neutralizes the primary flux, the counter-E.M.F. generated in the primary winding will be so low that an excessive flow of current will result and possibly burn out the winding.

This is a very important principle to keep in mind in connection with transformers and certain other alternating current machines. It explains the reason why A. C. windings will usually be burned out very quickly if connected to a D. C. circuit; because direct current, with its constant and unchanging flux, doesn't develop counter-voltage to limit the current flow.

126. POLARITY OF TRANSFORMER LEADS

Nearly all modern transformers have their H.T. and L.T. leads marked with **polarity markings.**

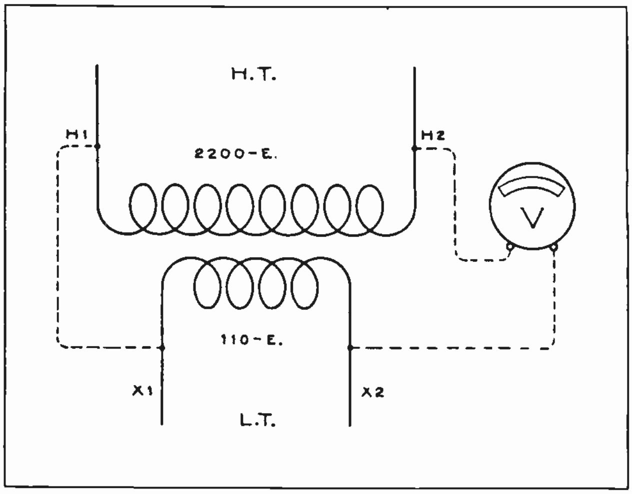

Fig. 116. This diagram shows the methods of connecting a shunt and a voltmeter to the high tension and low tension terminals of a transformer for making a polarity test.

These marks would be for example: H-1 and H-2 on the high-tension side of a single-phase transformer, and X-1 and X-2 on the low tension side.

On a three-phase transformer, the leads would be marked H-1, H-2, and H-3 on the high-tension side; and X-1, X-2, and X-3 on the low-tension side. These polarity markings indicate the order in which the leads are brought out from the windings, and also indicate the respective polarities of primary and secondary leads at any instant.

We know, of course, that the polarity of alternating-current windings is continually and rapidly reversing; but, as the secondary always reverses with the same frequency as the primary and is always 180° out of phase with the primary, we can determine the respective polarities at any instant of any alternation.

These polarity markings aid in making the proper connections for transformers to be operated in parallel, as it is necessary to have similar leads connected together, in order to have the transformers operate with the proper phase relations for satisfactory parallel operation.

If a transformer winding is marked H-1, H-2, H-3, and H-4, it will usually be found that H-1 and H-4 indicate the end-leads or full-winding terminals, while H-2 and H-3 are intermediate taps taken off at certain sections of the winding.

The highest and lowest numbers are placed at the end-leads or full winding, while the intervening numbers are placed on the part-voltage taps. The H-1 lead is usually located on the right-hand side, when facing the high tension side of the transformer. With transformers marked in this manner, if the H-1 and X-1 leads are connected together, as shown by the dotted line in Fig. 116, then when the voltage is applied to the H.T. winding the voltage between the remaining X-2 and H-2 leads will be less than the full voltage of the high-voltage winding.

In Fig. 116 a voltmeter is shown connected across the H-2 and X-2 leads of the single-phase transformer. The reason its reading will be lower than the applied voltage on the primary winding is because the polarity of the low-voltage winding is opposite to that of the high-voltage winding, and the two voltages will therefore oppose each other; so that the voltmeter will read their difference; or 2200 — 110 equals 2090. A transformer with the leads arranged and marked in this manner is said to have **subtractive polarity.**

If the leads are brought out of a transformer so that the voltmeter when connected to the adjacent H and X leads, as shown in Fig. 116, reads the sum of the voltages of the high tension and low tension windings, then the transformer is said to have **additive polarity.** In this case the markings of the X-1 and X-2 leads would be reversed.

On transformers which have their leads properly marked, the markings indicate whether the leads are arranged for subtractive or additive polarity.

Fig. 117 shows on the left a transformer with the leads marked for subtractive polarity and on the right another transformer with the leads marked for additive polarity.

When facing the high-tension side of a transformer, if the X-1 lead is on the right-hand side, it indicates that the polarity is subtractive; while, if the X-1 lead is on the left, it is then known to be additive polarity.

Leading transformer manufacturers have adopted standard connections and polarity markings for their transformers. Most power transformers are arranged with subtractive polarity, except distribution transformers of 200 kv-a. and under and with voltage ratings of 7500 volts and less; and these transformers are arranged with additive polarity.

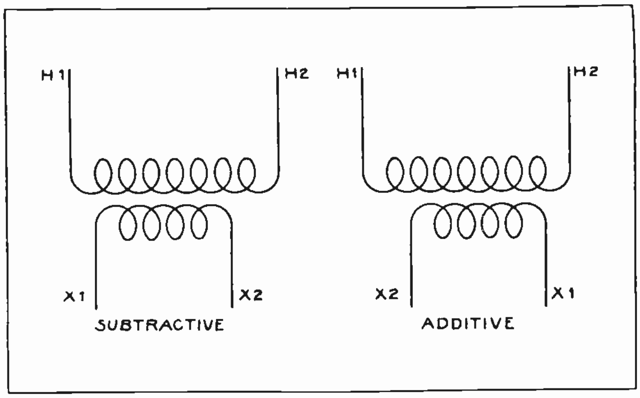

Fig. 117. This sketch shows windings of two transformers with their leads properly marked for subtractive and additive polarities.

127. VOLTMETER TEST FOR TRANSFORMER POLARITY

When the leads of a transformer are not marked in any manner, we can determine whether it has additive or subtractive polarity by simply connecting a jumper between the high-tension and low-tension leads on one side and a voltmeter of the proper rating between the high-tension and low-tension leads on the other side, as shown in Fig. 116.

If, when the primary is excited with its rated voltage, the voltmeter reads the difference between the voltages of the high and low voltage windings, the transformer has subtractive polarity, and the leads should be marked as shown in Fig. 116.

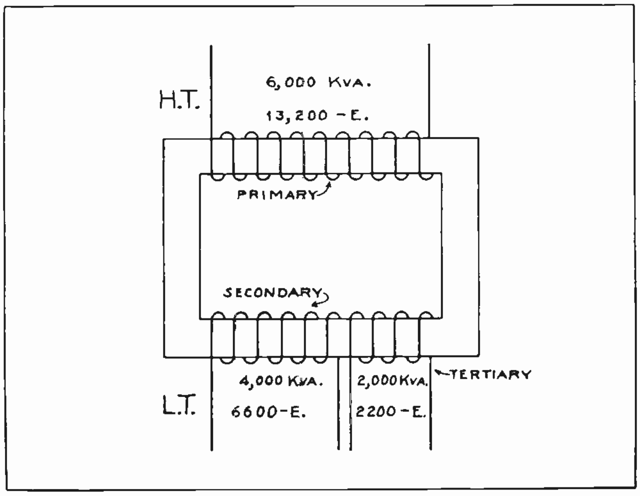

Fig. 118. Diagram of a transformer which is equipped with three windings. The high tension winding in this case is the primary, and the low tension winding is divided into two sectons, called the secondary and tertiary windings.

If the voltmeter reads the sum of the voltages of the high and low voltage windings, the transformer has additive polarity, and the leads should be marked as shown in the sketch at the right in Fig. 117.

128. TERTIARY WINDINGS

Sometimes a transformer may have on its core a third winding which really acts as an additional secondary winding and is for the purpose of supplying a separate circuit of a different voltage. This third winding is commonly called a **tertiary** winding.

Fig. 118 shows a transformer with primary, secondary, and tertiary windings. The primary winding is designed for 6000 kv-a. at 13,200 volts. The secondary winding, or larger of the two low-tension windings, is designed for 4000 kv-a. at 6600 volts. The tertiary winding, or smaller of the two low-tension windings, is designed for 2000 kv-a. at 2200 volts.

Some special transformers may also use tertiary windings to obtain certain power factor and voltage control characteristics.

TRANSFORMER CONNECTIONS

Transformers can have their primary and secondary windings connected in a number of different ways, using series and parallel connections to obtain different voltages, current capacities, etc. A number of the most common connections are thoroughly explained in the following paragraphs and illustrated with the accompanying diagrams. Observe each of these connections carefully and note the results obtained and the purpose for which each connection is used. Connections for single-phase transformers will be covered first and those for polyphase and special transformers will follow.

Fig. 119 shows a sketch of the windings and leads of an ordinary single-phase transformer, such as is commonly used for supplying current to lights and small motors. This transformer has a ratio of 20:1, with the primary winding designed for 2300 volts for connection to the regular 2300-volt distribution lines which are commonly run down streets or alleys to supply power to homes and small shops.

The secondary winding is designed for 115 volts and has two leads for connection to the service wires running to the house or shop. The outline of the tank is shown by the dotted line surrounding the windings.

The high-tension and low-tension leads are usually brought out on opposite sides of the tank, as shown in this diagram. The position and manner in which these leads are brought out was also clearly shown on the two smaller transformers in Fig. 106. Refer back to this photograph so that you may note and have well in mind the manner in which these leads are brought out at the top of the transformer case.

In Fig. 119, one side of the low-voltage secondary winding is shown grounded. This is done for safety reasons and to provide the grounded wire for polarized lighting systems, as previously explained in the section on wiring for light and power. It is well to mention again that this ground affords a definite safety protection against damage to connected equipment or accident to persons, in case of failure of the insulation between the high-voltage and low-voltage windings.

For this reason, the ground wire which is attached to the secondary wire and carried down the pole to a ground rod should be carefully connected and protected from breakage or damage.

129. SINGLE-PHASE TRANSFORMERS WITH SPLIT SECONDARIES

Most single-phase transformers are made with the secondary winding in two sections and have four leads brought out from this winding. This allows a choice of two voltages for light and power purposes, and also provides connections to obtain a three-wire Edison system with grounded neutral for lighting purposes.

Secondary windings arranged in this manner are known as **split-secondary,** or **series-multiple** secondary, windings. Fig. 120-A shows a diagram of a transformer of this type and also shows the manner in which the center leads of the split-secondary are usually crossed inside the transformer tank. This is done for convenience in connecting them in either series or parallel outside of the tank.

Fig. 120-B shows how the two sections of the secondary winding can be connected in series by simply connecting the two center leads together on the outside of the tank. Each half of the secondary is designed to supply 115 volts, so that when the two are connected in series, 230 volts will be obtained across the outside wires and 115 volts across either outside wire and the center wire.

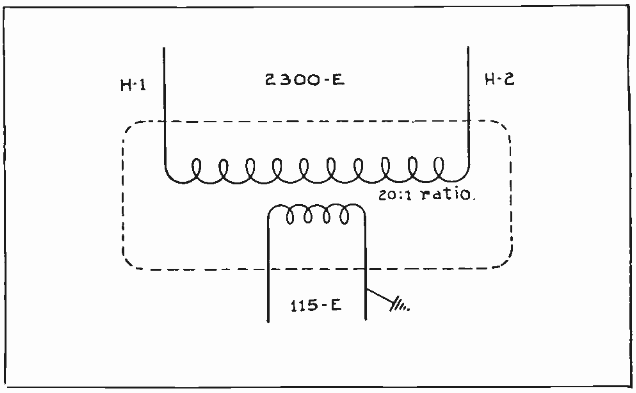

Fig. 119. The above sketch shows a schematic diagram of the primary and secondary windings of a single-phase transformer. This transformer has a step-down ratio of 20:1 and one side of the secondary is grounded, as is common practice.

If only 230-volt service is desired, the center wire can be left off and just the two outside wires used, but if three-wire, 115-volt and 230-volt service is desired, the center wire is connected to the point where the secondary coils are joined together, as shown. The ground connection should be attached to the center point when the three-wire system is used, and can be attached either to the center or to one of the outside wires when 230-volt, two-wire service is used.

Fig. 120-C shows the manner in which the two secondary windings can be connected in parallel to supply 115 volts and double the current capacity of either winding. This makes the entire output of the transformer available at 115 volts.

You will note from this diagram that having the center leads crossed inside the transformer makes possible a very convenient parallel connection by simply connecting together the adjacent leads outside of the tank.

The connections shown in Fig. 120-B for providing 115 and 230-volt service, brings three wires from the secondary of the transformer. The circuit, however, remains single-phase and should never

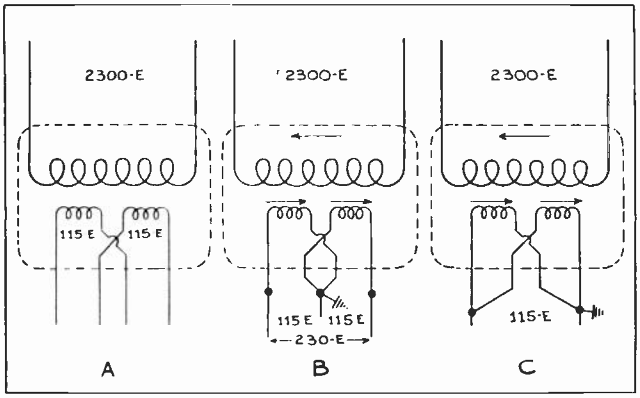

Fig. 120. A shows a single-phase transformer with the secondary winding in two sections. Note the manner in which the leads are crossed inside of the tank B. Secondary windings connected for 115 and 230-volt service. C. Secondary windings connected in parallel for 115-volt service.

be confused with a three-phase transformer just because they both have three wires.

Keep in mind when connecting load to a three-wire system, that the load should be balanced as evenly as possible between each outside wire and the neutral, in order to prevent operating one side of the transformer secondary heavily loaded while the other is idle or lightly loaded.

The arrows shown above the windings in Figs. 120-B and 120-C indicate the direction of the voltage that would be induced in the secondary coils with respect to the voltage in the primary at a certain instant when the right-hand primary wire is considered to be positive.

These arrows will show how the voltages of the two secondary coils add together in Fig. 120-B and how the currents would add together in Fig. 120-C.

130. TESTING SPLIT-SECONDARY LEADS BEFORE MAKING CONNECTIONS

In connecting the two coils of the secondary winding of a transformer in either series or parallel, if there is any doubt as to the way connections have been brought out of the tank, the leads before being connected together should be carefully tested by means of test lamps or a voltmeter.

To test them for finding the proper leads to connect in series, connect together two leads, one from each coil, and then connect a lamp or voltmeter between the remaining two leads. If when the primary is excited, the lamps burn brightly or the voltmeter indicates the sum of the voltages of the two secondary windings, the connection is correct for series operation.

The first two leads which were joined can then be permanently connected together, and the line wires connected to the two wires to which the lamp or voltmeter were attached.

In testing the leads for parallel connection, again temporarily join together one lead from each coil and connect the lamps or voltmeter between the remaining two leads. If when the primary is excited, the lamps do not burn or the voltmeter shows no indication, the leads to which they are connected may be safely joined together to one of the line wires for parallel operation. The other leads can be permanently connected together and attached to the opposite line wire.

If the lamps light or the voltmeter indicates voltage, the leads are improperly connected and should be reversed before being permanently connected for parallel operation.

It is very important that the proper leads be used when connecting transformer secondaries in parallel; otherwise, the windings will probably be burned out when the primary is excited.

131. PARALLELING SINGLE-PHASE TRANSFORMERS

Two or more single-phase transformers can be connected in parallel to supply a greater current or kv-a. of power than the capacity of one transformer will provide. In this manner additional transformers can be installed to take care of increasing load which has grown beyond the capacity of transformers already installed, or two or more small transformers can be temporarily connected in parallel to replace one larger transformer in emergencies when the larger transformer is to be taken out of service for repairs.

In paralleling transformers it is necessary to connect together transformers of similar characteristics; otherwise, one transformer may assume more than its share of the load and possibly blow the primary fuses. This would throw all of the load on the remaining transformers and would either overload them, or blow the fuses in their primary leads.

It is also very important to see that leads of the proper polarity are connected together; because, if the wrong secondary leads are connected in parallel, it would result in a double-voltage short-circuit, the same as though two single-phase alternators were connected in parallel when 180° out of phase.

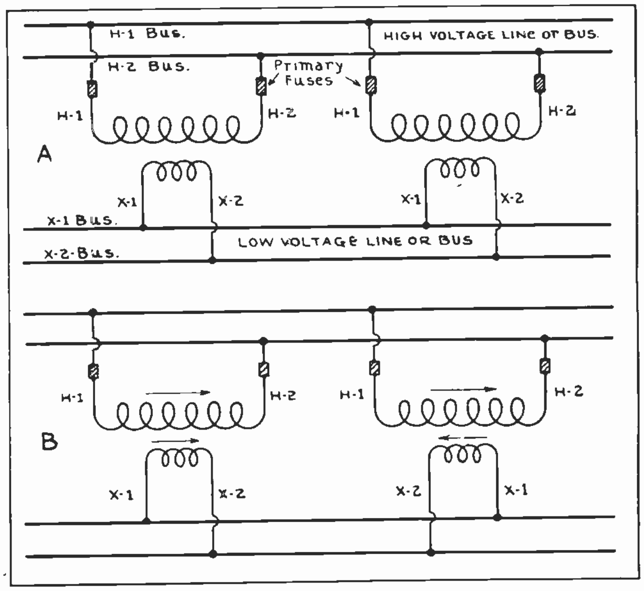

Fig. 121. A shows two single-phase transformers with like polarities connected in parallel. B shows the proper method of connecting two single-phase transformers in parallel when the polarity of one is subtractive and the other is additive. Note the polarity markings in each case.

Transformers with different ratios should never be connected in parallel, as even a small difference in the secondary voltages of two or more transformers would result in very heavy cross currents between the units if they were connected together.

When the primary and secondary leads are properly marked, it is a simple matter to connect two or more single-phase transformers in parallel, as leads with like polarity markings can then be safely connected together, as shown in Fig. 121-A.

In connecting together two transformers, one of which has additive polarity and the other subtractive polarity, the leads should be arranged in parallel, as shown in Fig. 121-B.

132. TESTING SECONDARY LEADS FOR PARALLELING SINGLE-PHASE TRANSFORMERS

If the leads of the transformers are not marked, then the secondary leads should be tested with a voltmeter or lamp bank before being connected in parallel. This test is illustrated in Fig. 122, and is similar to the tests made for parallel connections of the two secondary windings of one single-phase transformer.

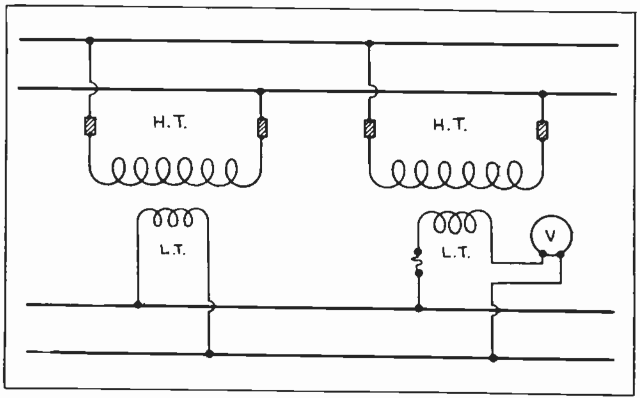

Fig. 122. This diagram illustrates the method of using a voltmeter to test the polarity of a transformer secondary before connecting it in parallel with another.

The high-tension leads can be connected to the supply line in a uniform manner, as shown in the diagram. The secondary leads of one transformer can then be connected to the low-voltage line, and the secondary leads of the other transformer should have a fuse connected in one and a voltmeter connected in the other; then they can be connected to the line in the same manner as those of the other transformer.

If the voltmeter shows no reading, the connections are correct for parallel operation and the fuses can be eliminated and the voltmeter removed from the circuit. If the voltmeter does show a reading, the connections are wrong and the leads of one transformer secondary should be reversed and then connected to the line after testing again with the voltmeter to make sure that they are right.

133. CONNECTING TRANSFORMER PRIMARIES IN SERIES

In certain cases it might be desired to connect a bank of single-phase transformers to a high-tension line which has a voltage higher than the voltage rating of the high-tension winding of the transformers. As the more common distribution and transmission voltages usually vary in multiples such as 2200 volts, 6600 volts, 13,200 volts, etc., it is often possible to connect the primaries of two or more transformers in series to the high-voltage line. The secondaries can then be connected in parallel or series as desired.

Fig. 123 shows three single-phase transformers with 2200-volt primary windings connected in series to a 6600-volt line. The impedance of the three windings in series is the same as that of one 6600-volt winding of the same kv-a. capacity and will therefore limit to the proper value the current which will flow through the windings at 6600 volts.

The secondaries of these three transformers are shown connected in parallel to the low-voltage line. If each of the transformers has a 10:1 ratio, the low-voltage line will be supplied with 220 volts and the power that can be taken from this line will be equal to the sum of the kv-a. ratings of the three transformers.

Fig. 124 is a photograph of a transformer installed on a pole, and shows the method of connecting the low-voltage secondary leads together and to the wires which run to the buildings for three-wire service. You will also note the lightning arresters which are attached to the high voltage wires and have their lower ends grounded, and the fuse cutouts which are mounted on the rear cross-arm and connected in series with the primary leads.

This view also shows the installation of a thermotel temperature and load indicator which is inserted under the edge of the transformer tank cover.

134. THREE-PHASE TRANSFORMER CONNECTIONS

To step the voltage of a three-phase circuit up or down, it is necessary to use either a polyphase transformer or three single-phase transformers; except in certain cases where, by means of special connections, two single-phase transformers can be used.

Each method will be explained in the following paragraphs.

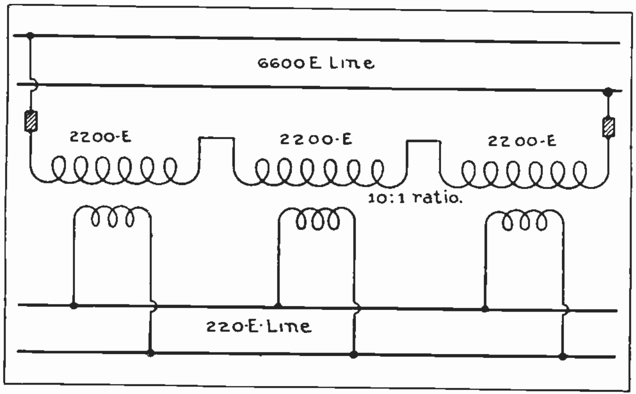

Fig. 123. Transformer primaries are sometimes connected in series to a line of higher voltage as shown above. The secondaries can then be connected for parallel operation.

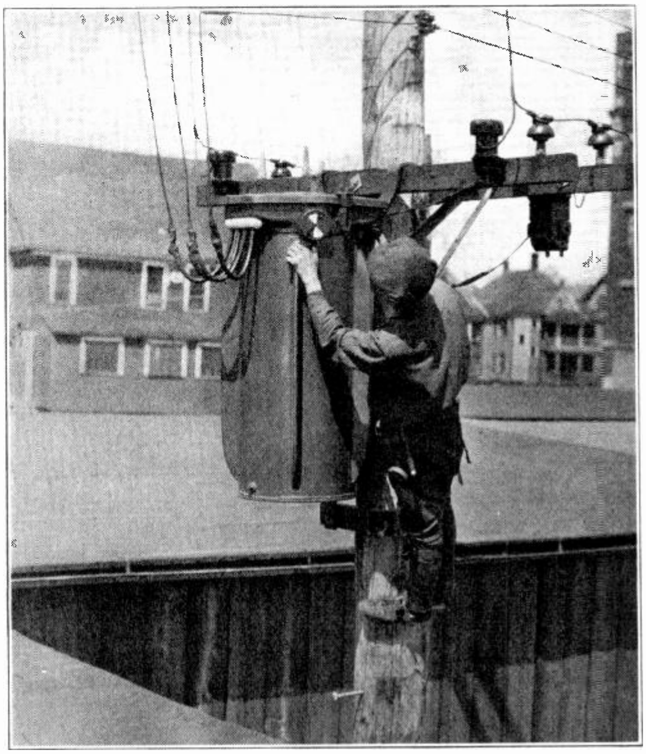

Fig. 124. This photo shows a pole type transformer and the method of making primary and secondary connections. Also note the thermotel temperature indicator near the hand of the electrician.

Polyphase transformers are quite commonly used where space is limited, because they are more compact and require less space than three single-phase transformers of the same kv-a. rating.

Where flexibility is desired, three single-phase transformers are frequently used because of the advantage in the fact that if one transformer is taken out of service the load can be temporarily carried by the other two, by making a slight change in the connections.

Fig. 125 shows the arrangement of the primary and secondary coils on the core of a three-phase step-down transformer. This sketch also shows the connections of the primary and secondary windings to high-voltage and low-voltage three-phase lines.

In each of the following connection diagrams three primary and three secondary windings will be shown without the cores, and these can be used to represent either three single-phase transformers or the three sections of a three-phase transformer.

When three single-phase transformers are connected together to a three-phase system they are commonly referred to as a **bank** of transformers.

135. STAR AND DELTA CONNECTIONS, AND THEIR VOLTAGE AND CURRENT RATIOS

There are three types of connections commonly used with transformers on three-phase systems, and these connections are known as the **star**, **delta**, and **open-delta** connections.

Ordinary star and delta connections and their voltage and current ratios have been explained both in the second section on Armature Winding and in the first section on Alternating Current, in connection with A. C. motor and generator windings. The same ratios and values for these connections apply to transformers as well as to motors or generators, and they will therefore be repeated here for convenience.

You will recall that the star connection provides a sort of series arrangement of the windings of any electrical machines connected in this manner; while the delta connection is a parallel arrangement of the windings.

The star connection always increases the line voltage above that of the phase windings, while the delta connection increases the line current above that of the phase windings.

When transformer or generator windings are connected **star, the line voltage will be 1.732 times the phase-winding voltage** and the **line current** will be the **same as the phase-winding current.**

When transformers or generators are connected **delta,** the **line current will be 1.732 times the phase-winding current** and the **line voltage** will be the **same as that of the phase windings.**

We recall that multiplying either the current or voltage by the constant 1.732 gives the actual sum of two values which are added together 120° out of phase. To make it very easy to determine the voltage or current that can be obtained by the use of star or delta connections with transformers, we can arrange the material from the preceding statements in the following simple rules.

Rules for Star connections:

(A) Line I = Phase I
(B) Phase I = Line I
(C) Line E = Phase E × 1.732
(D) Phase E = Line E ÷ 1.732

Rules for Delta connections:

(A) Line E = Phase E
(B) Phase E = Line E
(C) Line I = Phase I × 1.732
(D) Phase I = Line I ÷ 1.732

136. THREE-PHASE STAR CONNECTIONS

Fig. 126 shows a diagram of the connections for either three single-phase transformers, or the three sets of windings of a polyphase transformer, in which both the primaries and secondaries are connected star, or Y.

This connection is known as the **star-star** or **Y-Y** connection.

You will note that, with this connection, the right-hand ends of each of the transformer windings are connected together to one common point or wire, and the left-hand ends are connected separately, one to each phase wire of the lines.

Tracing out this connection from each line wire through the phase windings, you will find it results in a star-shaped connection, as shown by the small simplified sketch at the left in Fig. 126.

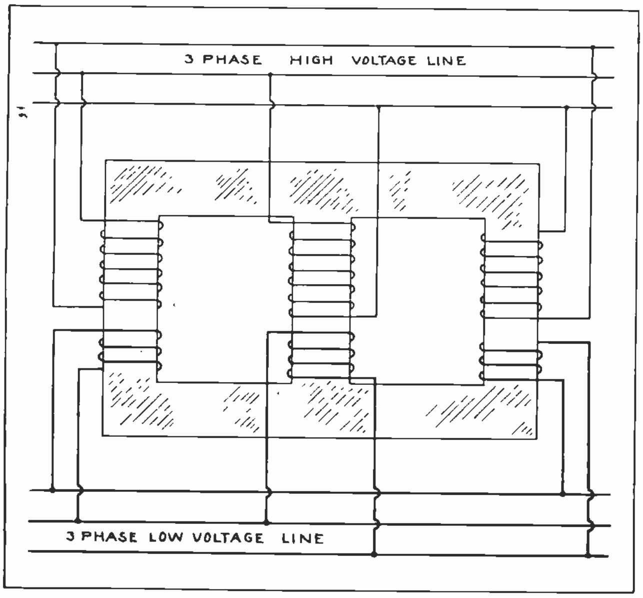

Fig. 125. The above sketch shows the primary and secondary windings of a three-phase transformer. Both primary and secondary are connected delta to the line wires.

To remember how to make this star connection, it is only necessary to keep in mind that **one end of each winding is connected to a common wire or neutral point** and that **the remaining ends are connected in order to respective phases.**

Where transformers are placed in an ordinary row or bank and where they have their terminals arranged and marked symmetrically, the connections to the high-voltage and low-voltage lines can usually be made in the same neat and symmetrical order as shown in Fig. 126. Following a definite and orderly system in this manner whenever possible, will help you to avoid mistakes when making such connections.

With this connection the primary line voltage will be found between L A and L B, L B and L C, and between L C and L A. This line voltage can also be found between any two of the three phase wires A, B, and C.

The primary phase voltage is the voltage between L A and D, L B and D, and L C and D.

The secondary line voltage can be measured between S A and S B, between S B and S C, or between S C and S A.

It can also be measured between any two of the three phase wires, A, B, and C.

The secondary phase voltage can be measured between S A and E, S B and E, or S C and E.

For the purpose of illustrating the various voltage and current values on the primary and secondary line leads and phases, we shall assume that the primary line voltage is 1000 volts and the primary line current 10 amperes; and that the step-down ratio of the transformers is 10:1.

Then, according to rule D for Y connections, the primary phase voltage will be: 1000 ÷ 1.732, or 577 volts across each phase winding.

According to rule B for the current in Y connections, the primary phase current will be 10 amperes. Then, considering the 10:1 ratio, the secondary phase voltage will be 577 ÷ 10, or 57.7 volts.

The secondary current will be increased in the same proportion that the voltage is decreased; so that the secondary phase current will be 10 × 10, or 100 amperes through each phase winding.

The secondary line voltage will be 57.7 × 1.732, or 99.9+ volts.

According to rule C for Y connections, the secondary line current will be the same as that in the phase windings, or 100 amperes. According to rule A for Y connections, the apparent power in the secondary line would be equal to the apparent power in the primary line, minus the very small percentage of loss in the transformers. When the transformers are operating at or near full load, this loss is so small that it is generally not considered in the ordinary approximate calculations used in field problems.

To calculate the power of the three-phase bank of transformers from the primary line voltage and current, we would use the three-phase power formula given in Section One of Alternating Current, or:

Three-phase app. power = E × I × 1.732

With the values given in Fig. 126 this would be:

1000 × 10 × 1.732, or 17.3+ kv-a.

Following the same rule for the secondary, we would have:

99.9 × 100 × 1.732, or 17.3+ kv-a.

If the primary line voltage used on a star connection such as shown in Fig. 126 were 4000 volts instead of the 1000 volts assumed in this problem, then the primary phase voltage would be 4000 ÷ 1.732, or approximately 2309 volts across the primary winding of each transformer.

This voltage is very commonly used where the primaries of three transformers are to be connected in star and the secondaries used separately for supplying single-phase light and power load at 115 and 230 volts.

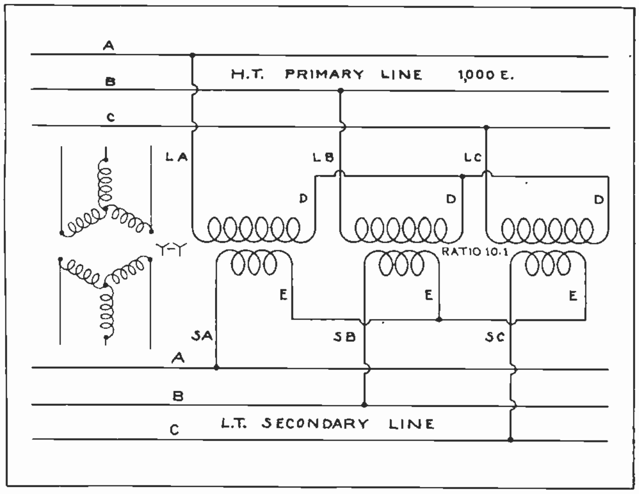

Fig. 126. Connection diagram for a bank of three transformers connected star-star.

137. THREE-PHASE DELTA CONNECTIONS

Fig. 127 shows the connections for a bank of three single-phase transformers, or the three sets of windings of a three-phase transformer, which are connected delta-delta, or Δ-Δ. These transformers are also of the 10:1 step-down ratio, and we shall assume the same values of 1000 volts and 10 amperes on the primary line.

If the primary line voltage is 1000, then, according to the rule B for delta connections, the primary phase voltage is also 1000. According to rule D for delta connections, the primary phase current will be 10 ÷ 1.732, or 5.77 amperes through each phase winding.

With the 10:1 step-down ratio, the secondary phase voltage will be 1000 ÷ 10, or 100 volts from "c" to "d" across each phase winding, and the secondary phase current will be 10 × 5.77 or 57.7 amperes through each phase winding.

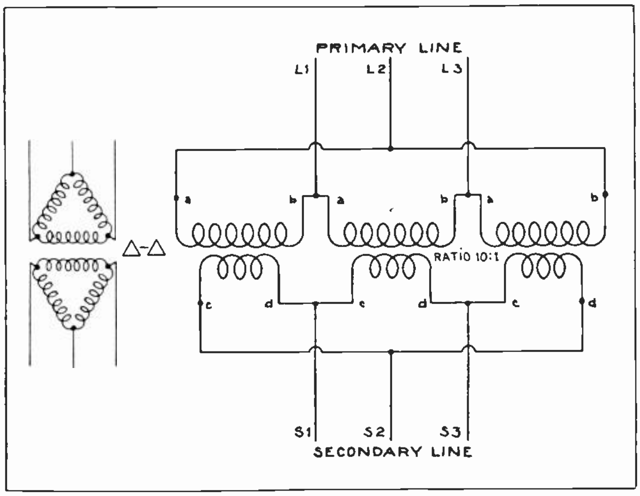

Fig. 127. Connection diagram for a three-phase bank of transformers connected delta-delta. Compare the large diagram with the small schematic sketch at the left and also with the explanation given in these paragraphs.

According to rule A for delta connections, the secondary line voltage will be 100; and according to rule C for delta connections, the secondary line current will be 57.7 × 1.732, or 99.9+ amperes.

The apparent power in kv-a. will again remain the same on the secondary as on the primary, with the exception of the slight loss in the transformers. So we find that it makes no difference in the amount of power the transformer will handle whether it is connected star or delta.

When a bank of transformers are connected either star-star or delta-delta, the difference between their primary and secondary line currents and voltages will only be that difference which is caused by the ratio between the transformer windings.

138. THREE-PHASE STAR-DELTA CONNECTIONS

Fig. 128 shows a bank of three transformers connected star-delta, or Y-Δ. The phase winding leads and line leads are marked the same in this diagram as in Fig. 127, and this transformer is also a step-down transformer with a ratio of 10:1.

We shall again assume the primary line voltage to be 1000 and the primary line current to be 10 amperes. With this connection, the primary phase voltage will be 1000 ÷ 1.732, or 577 volts between "a" and "b", or across each phase winding.

The primary phase current will be the same as the line current, or 10 amperes. With the 10:1 step-down ratio, the secondary phase voltage across each phase winding, or between "c" and "d", will be 577 ÷ 10, or 57.7 volts. The secondary phase current will be 10 × 10, or 100 amperes.

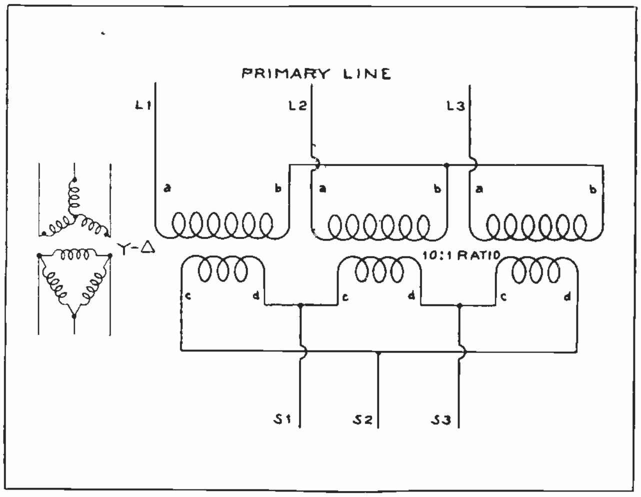

Fig. 128. Three-phase transformer bank with the primary connected star and the secondary delta. This connection is called "star-delta."

The secondary line voltage will be the same as the secondary phase voltage, or 57.7; because the secondary is connected delta. Check this with rule A for delta connections.

The secondary phase current will be 10 × 10 or 100 amperes, and the secondary line current will be 100 × 1.732, or 173.2 amperes, according to rule C for delta connections.

139. DELTA-STAR CONNECTIONS

Fig. 129 shows a bank of three transformers connected just the opposite to those in Fig. 128. In this case, the primary is connected delta and the secondary is connected star. This is called a delta-star or Δ-Y connection.

You will note that in referring to these connections with the terms delta or star, the primary is always mentioned first; the same as when speaking of the ratio between primary and secondary windings.

Assuming the same figures of 1000 volts and 10 amperes on the primary line and a 10:1 step-down ratio for these transformers in Fig. 129, the primary phase voltage will be 1000 from "a" to "b" in any phase winding, according to rule B for delta connections. The primary phase current will be 10 ÷ 1.732, or 5.77 amperes through each phase winding, according to rule D for delta connections.

With the 10:1 step-down ratio, the secondary phase voltage will be 100; and the secondary phase current will be 10 × 5.77, or 57.7 amperes. The secondary is connected star; so, according to rule

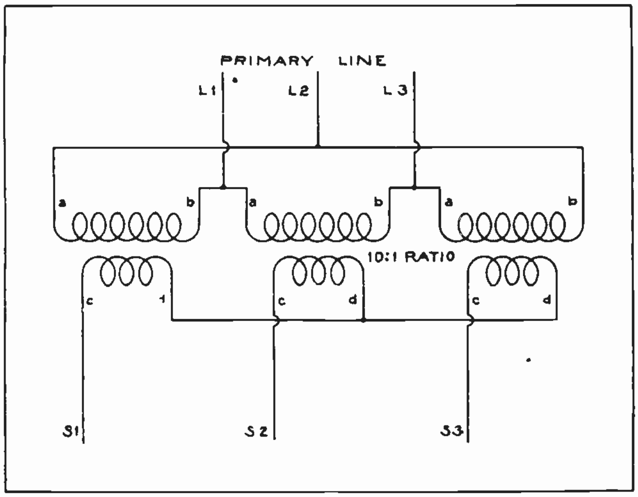

Fig. 129. Three-phase transformer bank connected delta-star. Observe carefully the methods of making the connections shown in each of the diagrams in this section.

C for star connections, we find that the secondary line voltage will be 100 × 1.732, or 173.2 volts.

This voltage would be found between S-1 and S-2, or between S-2 and S-3, or S-3 and S-1.

The secondary line current will be the same as the phase current, or 57.7 amperes. Check this with rule A for star connections.

If you determine the apparent power in kv-a. of both the primary and secondary windings in either Fig. 128 or Fig. 129, by using the formula,

three-phase app. power =
Line E × Line I × 1.732,

and using the voltage and current values given for the lines in each case, you will find the power to be the same on the secondaries as on the primaries.

This will be very good practice and will help you to become more familiar with the use of the three-phase power formula and calculations.

The four transformer connections which have just been explained and illustrated are the ones most commonly encountered in the field. Some companies may make slight variations or changes in these, but the general principles involved remain the same.

140. ADVANTAGES OF STAR CONNECTIONS FOR TRANSMISSION LINES

One of the principal advantages of the star connection for transformers is that it provides higher voltages for use on long-distance transmission lines, with lower ratios between the primary and secondary windings.

When used in this manner, the transformer supplying the power to the line is usually connected delta-star, to step up the voltage as high as possible with a given transformer ratio. The transformer at the receiving end of the line can then be connected star-delta, in order to reduce the voltage the maximum amount with a given transformer ratio.

Fig. 130 illustrates the use of these connections with a transmission line. A power plant alternator develops 2300 volts which is fed to the delta-connected primary of the step-up transformer. This transformer, having a ratio of 1:10, will produce a phase voltage of 23,000 volts in each phase of the star-connected secondary. The line voltage, however, will be 23,000 × 1.732, or 39,836 volts.

If we had used either a delta-delta or star-star connection, the line voltage would only be 23,000 with a 1:10 transformer ratio. Knowing that the higher the voltage used on the transmission line the greater will be the economy of transmission and the saving in copper costs, we can readily see the advantage of this connection.

At the receiving end of the line shown at the right, the step-down transformers use the opposite connection, or star-delta, to step the voltage down a maximum amount for a given ratio. Here a 10:1 ratio transformer with star-connected primary and delta-connected secondary will reduce the secondary line voltage to 2300 volts. This voltage can be used directly on large 2300-volt power motors, or it can be stepped down again with smaller banks of 10:1 transformers, using split secondaries to obtain 115 and 230 volts for lighting purposes.

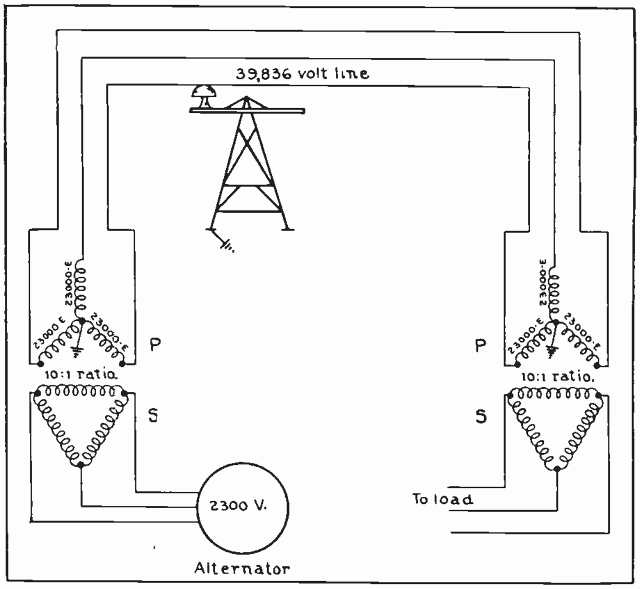

Fig. 130. This diagram illustrates the method and advantage of using star-delta and delta-star transformer connections with transmission lines.

When using transformers with the secondaries connected star and attached to high-voltage transmission lines, the neutral point of the star connection is commonly grounded. This provides another great advantage for the star connection because it makes possible the use of higher transmission line voltages with less voltage strain between the line wires and ground.

This greatly reduces the tendency to flash-over the line insulators and makes possible the use of smaller insulators, thereby reducing the cost of the transmission line.

You will note that, while the voltage between the line wires in Fig. 130 is 39,836 volts, the voltage between any line wire and ground or the steel tower supporting the insulator will only be 23,000 volts, or that of one phase winding of the step-up transformer secondary.

This is due to the fact that the neutral point of the star connection is grounded and will always be at approximately the same potential as the tower supporting the insulators.

141. OPEN-DELTA CONNECTIONS

One of the advantages of the delta connection for transformers is that one transformer can be taken out of service for repairs, and service maintained on the remaining two by what is known as the open-delta or V connection.

In other cases where it is desired to provide three-phase service with only two transformers, the open-delta connection is used for permanent installations. The total three-phase capacity of two transformers used in this manner will only be 57.7% of the capacity of three transformers of the same size.

An installation of this type is sometimes made where the average load to be supplied is rather light at the time, but is expected to become heavier as the plant or community expands. When the load increases beyond the capacity of the two transformers, a third one can be added and the connection changed to straight delta. The addition of this third transformer increases the capacity of the group 73% over what it was with the two transformers.

Fig. 131 shows the method of connecting two single-phase transformers in open-delta. The phase voltage in systems connected open-delta will be the same as the line voltages, or the same as with regular delta-delta connections.

The line current will be the same as the phase current, instead of being greater, as with ordinary delta connections. This is due to the fact that line 1 and line 3 have only one path through the phase windings, instead of two paths, as with the straight delta connection.

Where three transformers are connected delta-delta, if one becomes defective it is a very simple matter to connect the remaining two in open-delta. By overloading the transformers to a certain extent, it is possible to maintain nearly full load service for short periods while the defective transformer is being repaired.

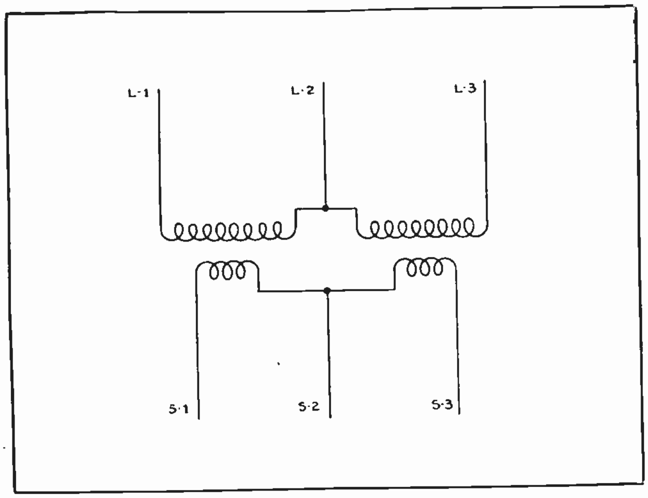

Fig. 131. Connections for using two single-phase transformers to provide three-phase service by what is called the "open-delta" connection.

If three transformers are connected star-star and one becomes defective, it requires a little more changing of the connections to convert the other two to open-delta operation; but it is not difficult to do, once you have well in mind the method of making the open-delta connection.

Both the primary and secondary of the defective transformer should always be disconnected from the line when changing to open-delta connection with the other two transformers.

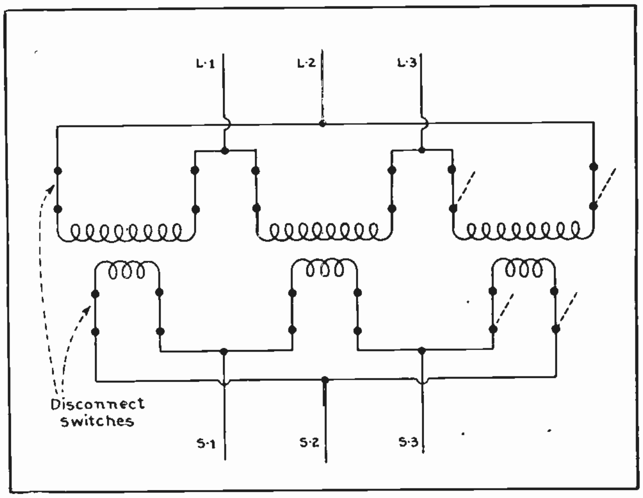

Fig. 132. This diagram shows a convenient method of arranging a bank of transformers with disconnect switches to quickly change over to open-delta operation in case of trouble on one transformer.

It is possible to use the open-delta connection on two of the phase windings of the three-phase transformer, in case one phase becomes defective. If the transformer is of the core type, both the primary and secondary coils of the damaged winding should be left open; but if the transformer has a shell type core, both the primary and secondary windings of the defective phase should be short-circuited upon themselves when the open-delta connection is made on the two good phases.

Fig. 132 shows three single-phase transformers connected delta-delta and equipped with disconnect switches in each of the primary and secondary leads. This arrangement permits a quick change-over to open-delta operation of two transformers if any one should become defective.

For example, if the right-hand transformer should become defective, the disconnect switches could be opened as shown by the dotted lines, and the remaining two transformers would then be operating open-delta. The same change could be made on either of the other two transformers with the same result.

When three transformers are connected either star or delta or in any combination of these except the open-delta, the total kv-a. capacity on the secondary side is equal to three times the capacity of one transformer.

Transformers which are to be connected together in a star or delta on three-phase lines should have similar characteristics; that is, similar kv-a. and voltage ratings, and also similar ratios, impedance, reactance, etc. If the characteristics are not the same the result may be excessive heating of one or more of the transformers or unbalanced line conditions.

142. GROUNDING OF TRANSFORMERS

As previously mentioned, the high-voltage winding of star-connected transformers is frequently grounded at the neutral point, when these transformers are used in connection with transmission lines.

It is quite common practice also to ground the low-voltage secondary windings of step-down transformers connected either star or delta. As explained in earlier paragraphs, this protects the low-voltage circuit in case of failure or puncture of the insulation between the high-voltage and low-voltage windings.

It is well to keep in mind that the secondary windings and the circuits to which they are connected are only insulated for the low voltage, and the insulation is not heavy enough to stand the high voltage applied to high-tension primary windings. So, if it were not for the ground on the low-voltage side a flash-over of the high-voltage to the low-voltage secondary would tend to puncture the insulation of the low-voltage circuits or some of the devices connected to them.

Having the ground already on the low-voltage circuits provides an easy path for the high voltage to go to ground. This flow of current from the high-voltage winding through the fault to the ground will frequently blow the primary fuses, thus indicating the trouble at once, so that it can be repaired.

The larger sketch on the right in Fig. 133 shows the method of grounding the delta-connected secondary of a three-phase bank of transformers. This ground is commonly made from the center tap, which is taken from the middle of one phase of the secondary winding.

The small sketch on the left in Fig. 133 shows a schematic diagram of the secondary connections and also illustrates the position of the ground.

Assuming that the secondary of these transformers has a voltage of 220 between any two phase wires, the voltage from the various phases to ground will be as follows: A phase to ground, 110 volts; B phase to ground, 190.5 volts; C phase to ground, 110 volts.

The reason for this variation in the voltage between the different phase wires and ground can be noted by careful observation of either of the connection diagrams shown in Fig. 133.

You will note that only half of the center phase winding is between either phase A or phase C and the ground, so there will be only half the voltage of this winding, or 110 volts, between either of these phase wires and ground.

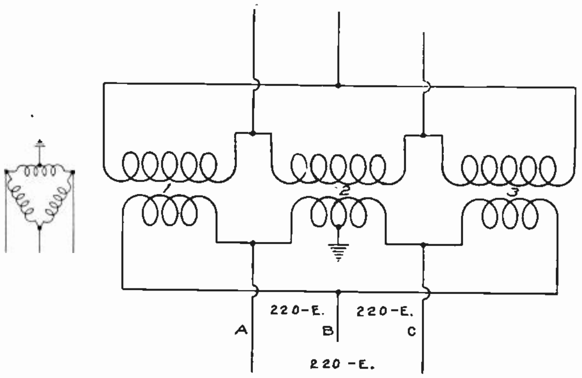

Fig. 133. This sketch shows the method of grounding the secondary circuit of a bank of transformers on which the secondary is connected delta.

Tracing the circuit from phase B in either direction to ground, we must pass through the secondary winding of transformer No. 1 or No. 3 in series with one-half of the winding of No. 2 to get to ground. This adds the voltages of one whole winding and half a winding, together in series, but 120° out of phase.

To get the effective sum of 220 volts plus 110 volts when these two values are out of phase 120°, we add the two voltages and then divide by 1.732, which gives approximately 190.5 volts.

Fig. 134 shows the common method of grounding the low-voltage secondary of a bank of transformers, when the secondary is connected star. The ground connection is made at the common connection, or neutral point, of the three secondary phase windings.

This is illustrated both by the larger sketch at the right and the small schematic diagram at the left in Fig. 134.

If the ground connection were not used on a bank of star-connected transformers, the voltage from any line wire to ground would be the same as the voltage between any two line wires. When the ground is used, the voltage between any line wire and ground is only 57.7 of the voltage between any two line wires, as was previously explained for the high-tension side of transformers which were connected to transmission lines.

This reduces the voltage strain on the insulation of the conductors and devices connected to the secondary circuit and also reduces the shock hazard.

143. PARALLELING THREE-PHASE TRANSFORMERS

When paralleling three-phase transformers the same precautions must be followed as when paralleling three-phase alternators. It is first necessary to phase out the leads and determine like phases.

This can be done by the lamp-bank or motor method explained in the section on A. C. generators.

The two or more transformer banks should be operated from the same primary line. They will then have like frequencies and will operate in synchronism, once they are properly phased out and connected.

When all of the transformer primaries and secondaries are properly marked in the manner previously explained, it is a simple matter to connect leads of like polarity together. If they are not marked, or in any case where the marks are not known to be dependable, the leads should be tested by means of a voltmeter or test lamps, in order to get connected together the leads of like polarities and between which there is no voltage difference.

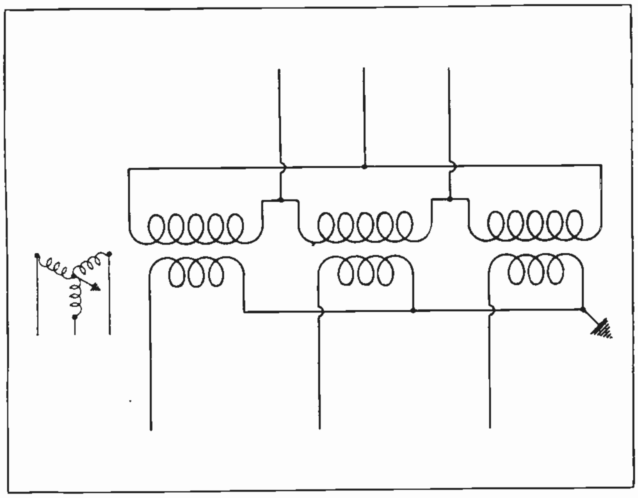

Fig. 134. This sketch shows the location of the ground connection on a bank of transformers with the secondary connected star. Read carefully the explanation of the advantages of this system which are given in the accompanying paragraphs.

144. THREE-PHASE, FOUR-WIRE SYSTEMS

The three-phase, four-wire system is obtained by bringing out the fourth wire from the neutral or grounded point of a star-connected bank of transformers as shown in Fig. 135. This system is used by a great many power companies for distribution circuits of 2300 to 4000 volts which feed power and lighting equipment.

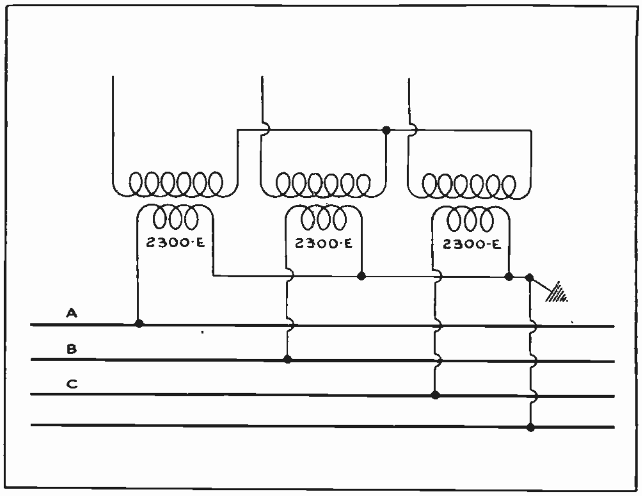

Fig. 135. Connections for three-phase, four-wire service from the star-connected secondaries of a three-phase bank of transformers.

The three-phase, four-wire system provides two different voltages, one of which is obtained between any two of the line wires A, B, and C; and the other between any of the line wires and the neutral wire, N.

Assuming the secondary phase voltage of the transformers in Fig. 135 to be 2300 volts, the voltage between any two of the line wires A, B, and C will be approximately 4000 volts; while the voltage between any one of the line wires A, B, or C and the neutral wire N will be 2300 volts. The voltage from any one of the line wires to ground will be 2300 volts, while the voltage from the neutral wire to ground will be zero.

In any four-wire, three-phase system in which the fourth or neutral wire is taken from the Y point, or common connection of the star-connected transformer windings, the voltage from any line wire to neutral is equal to the voltage between the line wires multiplied by .577, which is the same as dividing by 1.73.

SPECIAL TRANSFORMERS

In addition to the common types of single-phase and polyphase transformers for which the connections have just been explained, there are several special transformer connections which are frequently encountered in the field.

These special transformers each have certain special applications and are very important in the particular work for which they are designed. You should, therefore, have a good understanding of the principles and uses of the more common types.

145. TAP-CHANGING TRANSFORMERS

It is often desirable to make slight changes in voltage delivered by a bank of step-up or step-down transformers, in order to compensate for varying line drop. In other cases we may wish to change the ratio of the transformer slightly to adapt it to changed operating conditions with other transformers or line equipment.

For this purpose a **Tap-Changing** transformer is frequently used.

Transformers of this type are equipped with extra leads or taps brought out from a certain section of the winding so that, by shifting a sliding connection from one of these taps to the other, the number of turns in the winding can be varied.

This will, of course, vary the ratio between the transformer primary and secondary and will thereby increase or decrease the voltage, according to whether turns are being cut out or added in the winding.

It is usually desirable to be able to accomplish this change without disconnecting a transformer or interrupting service.

There are several different ways of accomplishing this, and one common method is shown in Fig. 136. With this type of transformer, a certain portion of the end of the primary winding is divided into two sections or windings in parallel and marked M and N in the diagram. These sections are equipped with taps and provided with a set of sliding contacts, X and Y, which can be moved from one tap to another. Either of these tapped sections of the transformer winding will carry the entire load for a few seconds without overheating.

The tap switches should not be shifted or changed during the time that load current is flowing through them, or the contacts would be badly burned by the arc set up by the heavy current and high voltage.

To prevent this, an oil switch is provided in each of the parallel circuits or leads to the tapped sections of the winding.

In order to increase the voltage on the secondary we decrease the number of turns on the primary, thereby decreasing the step-down ratio between the two windings.

This is done in the following manner. Oil switch "A" is first opened to temporarily shift all of the load over to the section N of the tapped winding and thereby stop the current flow through section M. The movable contact is then shifted from stationary contact 3 to 2. Oil switch "A" is then closed, and oil switch "B" opened to shift all of the load to section M.

Movable contact Y is then shifted from stationary contact 3 to 2 in order to balance the number of turns in the two parallel tapped sections. Then oil switch "B" is again closed, allowing the load to divide between the two tapped sections of the winding.

Quite a number of large power transformers are being built with tap changing switches or mechanisms, which are installed either in the top of the transformer case or in an auxiliary box on the side of the transformer.

Some of these tap-changing switches are designed for hand-operation while others are operated by remote control motors or by an automatic voltage-regulating device.

The use of tap changers aids in keeping electric service to customers at the proper voltage and greatly increases the flexibility of transformers equipped with them.

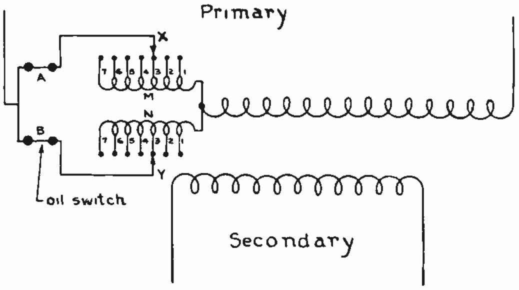

Fig. 136. This diagram shows a method of arranging adjustable connections on the primary of a tap-changing transformer.

146. SCOTT TRANSFORMERS

Sometimes it is desired to change two-phase energy to three-phase, or vice versa. This can, of course, be done with motor-generator sets, but in a number of cases it may only be desired to convert a small amount of power from one system to the other and, therefore, doesn't justify the installation of costly machinery.

In certain older plants which are equipped with two-phase motors, it may be desired to change over to modern three-phase service; or it may be that the power company, in changing over its equipment. can furnish only three-phase service.

In order to prevent scrapping or discarding all of the two-phase motors installed, it is often desirable to change the three-phase energy which is supplied, to two-phase energy to operate a number of the motors, until they are worn out and can be economically replaced with three-phase machines.

This change from three-phase to two-phase or the reverse can be economically made by means of two single-phase transformers, one of which is equipped with a center tap and the other with a tap at 86.6% of its winding.

Two transformers connected in this manner are shown in Fig. 137. This connection is known as the **Scott Transformer** connection and is named after its inventor, Charles F. Scott, consulting engineer of the Westinghouse Electric and Manufacturing Company.

Two of the three-phase line leads are connected to leads L-1 and L-2 of the single-phase transformer which has the center tap. The third three-phase line lead is connected to the 86.6% tap on the remaining single-phase transformer winding.

The other end of this winding is connected to the center tap of the other unit, as shown in the diagram. When three-phase energy is applied to these three line leads, two-phase energy can be taken from the transformer secondaries at the leads marked "phase A" and "phase B".

On the other hand, if two-phase energy is applied to A and B phase, three-phase energy can be obtained from leads L-1, L-2, and L-3.

The small sketch at the right illustrates this type of transformer with a schematic diagram, and shows the manner in which the three-phase voltages and relations are obtained from the two transformers.

Assuming the voltage of each of the complete transformer windings on the three-phase side to be 100 volts, we find that there will be 50 volts in each of the sections on either side of the 50% tap of the left winding, and 86.6 volts in the active section of the right-hand winding.

Connecting the end of the right-hand winding to the center tap of the left winding causes the voltages in these two windings to be 90° out of phase with each other.

The 86.6% of the right-hand winding is in series with either half of the left winding when tracing from L-3 to L-1 or L-2.

When 86.6 volts are added in series with 50 volts, but are 90° out of phase, the resultant voltage will be 100 volts. So we find that there will be 100 volts between L-1 and L-2, between L-2 and L-3, and also between L-3 and L-1.

Special single-phase transformers can be bought with taps arranged for this connection, or in some cases where it is desirable to change over a small amount of power, two small single-phase transformers can have either their primaries or secondaries rewound and equipped with taps at the middle of one and at 86.6% of the winding of the other.

147. AUTO TRANSFORMERS

The auto transformer is one in which a single tapped coil is used for both the primary and secondary, as shown in Fig. 138-A and B.

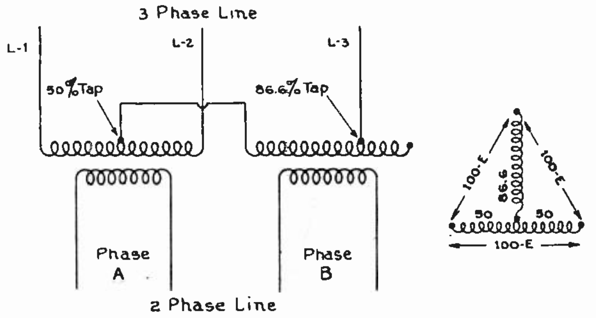

Fig. 137. The Scott transformer connection shown above is often used to change three-phase energy to two-phase or vice versa.

The principal application of auto transformers is for use with starting compensators, to reduce the starting voltage of A. C. induction and synchronous motors.

Auto transformers use somewhat less copper than the regular type of static transformer, but their efficiencies are usually somewhat lower.

The diagram at A in Fig. 138 shows an auto transformer used to step the voltage down, while the diagram at B shows a step-up transformer.

When alternating voltage is applied to the terminals of the full winding in Fig. 138-A there will be a voltage drop across the entire coil, which is equal to the amount of applied voltage.

As the resistance of the coil is very low, the self-induced counter-voltage of the full coil will also be nearly as high as the applied voltage. The induced counter-voltage in the small secondary section of the coil will be proportional to the number of turns included in this section. Therefore, the voltage obtained on the secondary leads will depend upon the point at which the tap, or wire A, is connected to the winding, and the number of turns between wires A and B.

If the secondary section of an auto transformer is wound with heavier wire, a considerably greater current can be taken from this section than is supplied to the primary leads. This is due to the fact that the flux of the upper section of the main coil also cuts across the turns of the lower section, and will thereby induce added energy in this coil.

For starting induction motors this is ideal, because the heavy starting currents which are required can be obtained at low voltage from the secondary of an auto transformer without drawing such a heavy surge of current from the power line.

In the step-up auto transformer in Fig. 138-B, the secondary voltage will be equal to the voltage across the primary coil plus the voltage induced in the secondary section by the flux of the primary coil. In this manner the voltage can be stepped up as much as desired, by properly arranging the ratio of turns in the primary and secondary sections.

Auto transformers are frequently equipped with taps, so that the wire A can be moved back and forth to include more or less turns in the primary or secondary windings.

If wire A in diagram A is moved to a higher point, it will include more turns in the secondary, thereby increasing the step-up ratio and the secondary voltage of the transformer.

Auto transformers of this type are very convenient for obtaining variable voltages for certain special applications.

Fig. 138-C shows a diagram of an auto transformer connection that can be used to supply 110-volt and 220-volt energy from a 440-volt line, for operation of lights and 220-volt motors. It is also very convenient for obtaining various voltages for test purposes.

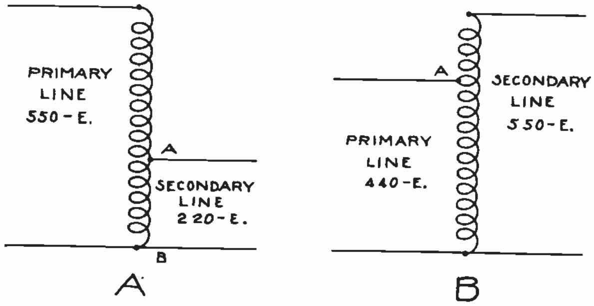

Fig. 138. A shows a step-down auto transformer. Note the reduction obtained in the voltage between the primary and secondary lines. B shows a step-up auto transformer to increase the secondary voltage.

Auto transformers with low ratios such as 2 to 1, are sometimes used on very large installations because of their cost being much lower than that of two-coil transformers. They are not often used however for general light and power service because of the very high voltage to ground which they place on the secondary leads, and the danger that this would create to equipment and persons handling it.

Three-phase auto transformers are used for starting three-phase induction motors, as well as for certain other special applications.

Fig. 139 shows a three-phase auto transformer in which the three ends, one from each coil, are connected together to form a star connection at Y. The other end of each coil is connected to its respective line lead.

A little current will be flowing through the windings of an auto transformer as long as it is connected to the line, the same as the magnetizing current which exists in the primary of any transformer even when no load is on the secondary.

When the secondary of an auto transformer is loaded, the primary current of course increases; but, in the case of a step-down auto transformer such as commonly used with motor starters, if the step-down ratio is 2 to 1, then the primary current will increase only one-half as much as the secondary load current is increased.

Many auto transformers used for motor starters or compensators have their coils equipped with taps, so that the secondary leads to the motor can be changed to obtain higher or lower starting voltage and thereby increase or decrease the starting torque of the motor.

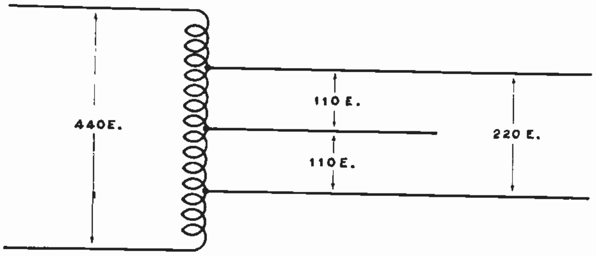

Fig. 138-C. Auto transformer connection for obtaining both 110 and 220 volts from a 444-volt line.

The diagram in Fig. 139 shows the windings equipped with three taps of this nature. It is quite common to have these taps arranged so that, when the secondary leads are placed on the terminals A, the secondary will deliver 40% of the line voltage to the motor. When the taps are placed on terminal B, the motor will receive 50% of the line voltage. When they are placed on the terminal C, the motor will receive 60% of the full line voltage, etc.

Added diagrams and further explanations of auto transformers will be given in a later section in connection with alternating current controllers.

148. INDUCTION VOLTAGE-REGULATORS

On distribution lines which feed energy to line and power equipment there is practically always a certain amount of load variations as the lights and motors of different buildings are switched on and off.

This variation in the load on the feeder wires also causes a variation in voltage drop on these wires, and a certain amount of variation in the voltage supplied to the load devices.

It is extremely undesirable to have more than a very few per cent. of voltage variation at the load —particularly on circuits which supply current to incandescent lights.

Low voltage causes reduced efficiency of incandescent lamps and reduces the torque and efficiency of motors; and sudden voltage variations cause objectionable flickering of lights. For this reason it is necessary to have some means of automatically regulating the voltage of feeder and distribution circuits which supply energy from the substations to customers' premises.

As the various feeder lines running out from substations usually have different lengths and different

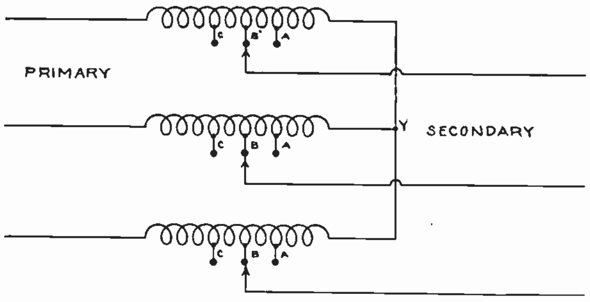

Fig. 139. Three-phase auto transformer in which each winding has several taps so that the secondary voltage can be varied.

amounts of load it is not possible to regulate the voltage of all of these circuits by controlling the voltage at the substation busses. These busses are therefore supplied with one uniform voltage of the proper value to compensate for the ordinary line drop in the feeders and distribution lines.

The voltage of each of the distribution circuits is then automatically regulated to compensate for the load and voltage variations, by means of a device known as an **induction voltage-regulator.**

149. OPERATING PRINCIPLES OF INDUCTION REGULATORS

An induction voltage-regulator is simply a form of transformer which has a movable secondary winding which can be shifted or rotated with respect to the primary winding. The primary winding is called the **stator** and the movable secondary is called the **rotor.**

By turning the secondary winding into various positions with respect to the primary, the voltage induced in the secondary can be varied in amount over a wide range and, by turning the secondary winding far enough, the voltage induced in it can actually be reversed.

In this manner the secondary voltage of the regulator can be made to either aid or oppose the line voltage. Figs. 140-A, B, and C shows the connections for an induction voltage regulator.

The primary winding, B, consists of a large number of turns of comparatively small wire and is connected directly across the line. The secondary winding consists of a very few turns of heavy wire which is large enough to carry the entire load current, and this winding is connected in series with the load and one side of the line.

In Fig. 140-A the secondary rotor winding is shown in a position so that it is receiving the maximum induced voltage from the primary, and this voltage is in a direction to add to the primary voltage in series and thereby increase the line voltage.

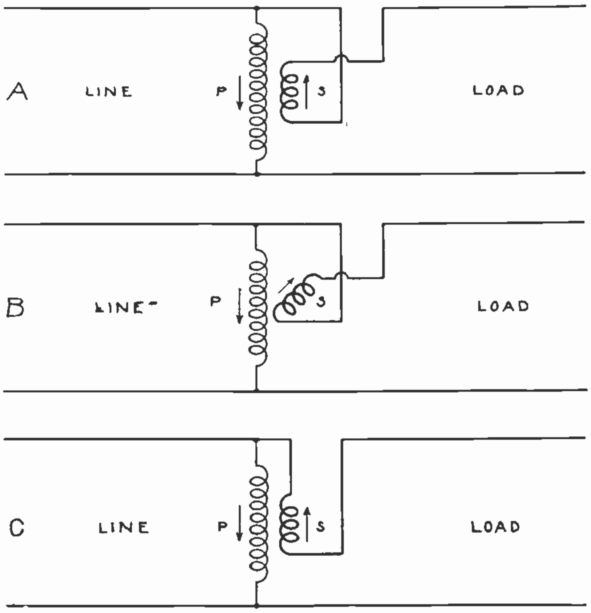

Fig. 140. The above three sketches show the connections and illustrate the principle of an induction voltage regulator. Study carefully each of the three diagrams while reading the explanations given on these pages.

In this figure, it is assumed that the top wire is positive for the instant, and the arrows near the primary and secondary coils indicate the direction of the voltages in them.

You will recall that when current flows in one direction through the primary winding of an ordinary transformer, it will be flowing in the opposite direction, or 180° out of phase, in the secondary, provided the coils are wound alike.

In Fig. 140-B the secondary rotor is shown turned at somewhat of an angle with the primary winding, and in this position the secondary receives less induced voltage from the primary and therefore doesn't aid or increase the line voltage as much.

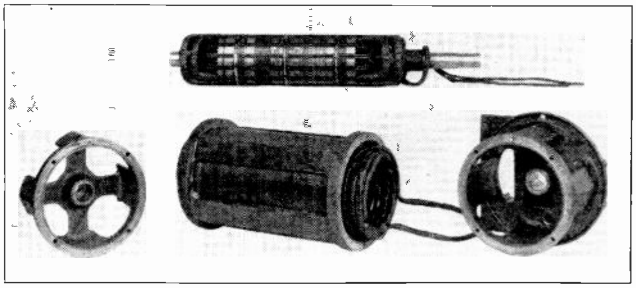

Fig. 141. This photo shows the stationary, primary, and rotating secondary windings of an induction voltage regulator. (Photo Courtesy General Electric Co.)

In Fig. 140-C the secondary has been turned to a position 180° from where it was in A. In this position it is receiving maximum induced voltage from the primary and its voltage is in a direction opposing the primary voltage, so that it reduces the voltage applied to the line.

Fig. 141 shows the stationary primary winding, and also the movable secondary winding which is placed on the rotor. These units are shown removed from the voltage regulator case. This photograph shows very clearly the construction of these elements. Note how the flexible leads of the movable secondary are given a few turns around the shaft of the rotor so that they can be permanently connected in series with the line and yet allow the rotor to make one-half turn, or 180° of rotation. This eliminates the necessity for slip rings and brushes.

150. AUTOMATIC OPERATION OF INDUCTION REGULATORS

The boosting or bucking effect of the induction voltage regulator usually ranges from 5% below normal line-voltage to 5% above line-voltage. These regulators are usually operated automatically by means of small A. C. motors which drive a worm gear and rotate the secondary of the regulator.

The motor is controlled or started, stopped, and reversed by a set of potential relays or contact-making voltmeters with auxiliary contacts on the movable element.

When the voltage on the distribution line drops below normal, the relays close the circuits of the

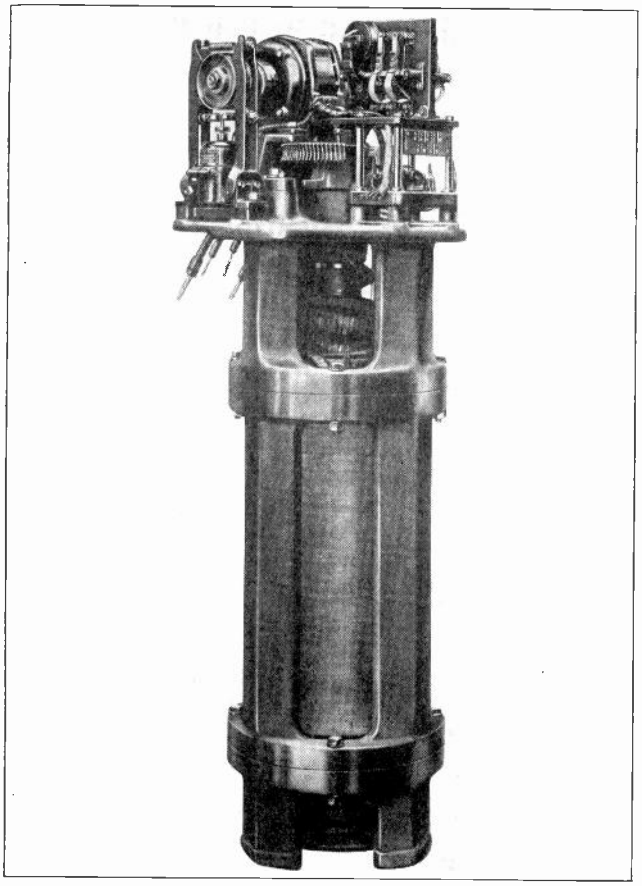

Fig. 142. Complete stator and rotor of a single-phase voltage regulator with the operating motor attached. (Photo Courtesy General Electric Co.)

motor to revolve the secondary winding of the regulator to a position where it will receive a greater induced voltage of a direction to aid and increase the line voltage. If the line voltage rises too high because of removal of practically all the load from the line, the relay contacts close another circuit to reverse the motor and rotate the secondary winding of the regulator to bucking position, where its voltage will oppose that of the line.

Fig. 142 shows a completely assembled primary and secondary unit of an induction regulator. The operating motor and part of the contacts are shown attached to the top of the stator frame in this view.

Fig. 143 shows a complete single-phase regulator with the primary and secondary enclosed in a tank of insulating oil. The sensitive voltage relay, adjustable tap-control, and resistance box and switch are shown mounted on a panel on the front of the regulator.

Induction regulators are also made for three-phase operation. These are wound similarly to the stator of the three-phase induction motor. Regulators of the induction type are in very common use in modern substations which supply alternating current to feeder and distribution circuits. Therefore, it will be well worth your while to obtain a thorough understanding of the principles of this device and to carefully observe and study the various parts of the control and operating mechanism of the regulator in your A. C. shop Department.

151. INSTRUMENT TRANSFORMERS

While on the subject of transformers, it will be well to consider more fully the principles and construction of the small transformers which are used in connection with meters on high-voltage A. C. circuits, and which are known as **instrument transformers.**

The use of these transformers has already been explained to some extent in the section on Alternating Current Meters. Those which are used to reduce the current of heavy-duty power circuits and to operate ammeters and the current elements of wattmeters and watthour meters, trip coils of oil switches, operating coils of current relays, etc., are known as **current transformers (C.T.)**

The other type, which are used to reduce the voltage of high-tension circuits and to operate voltmeters, potential elements of wattmeters and watthour meters; power-factor meters, synchroscopes, potential relays, etc., are known as **potential transformers (P.T.)**

Instrument transformers are carefully and specially designed to give very accurate ratios of transformation on voltage and current values within the range for which they are designed.

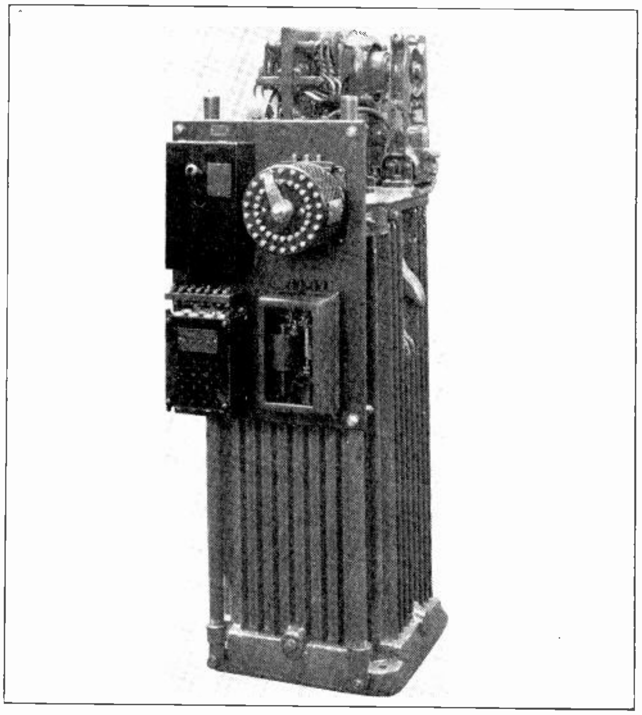

Fig. 143. This photo shows a single-phase regulator enclosed in its tank and equipped with the operating motor and control relays. (Photo Courtesy General Electric Co.)

152. CURRENT TRANSFORMERS

The primary of a current transformer is always connected in series with the line of which the current is to be measured, as shown in Fig. 144-A. This primary winding usually consists of only one or two turns and in some cases of just a straight conductor passed through the core around which the secondary is wound. This produces the same effect and ratio as one loop or turn.

On circuits carrying very heavy currents, the flux set up by one turn, or even just a short section of the straight conductor, is sufficient to induce the proper voltage in the secondary winding, as the instruments require very little power to operate their moving elements.

The secondary winding consists of a great many turns and its terminals are connected directly to the terminals of the ammeter, wattmeter, or relay which the transformer is to operate.

The secondary of the current transformer should always be grounded for safety in case of a breakdown of the insulation, which might allow the high voltage of the line to get to the low-voltage circuit.

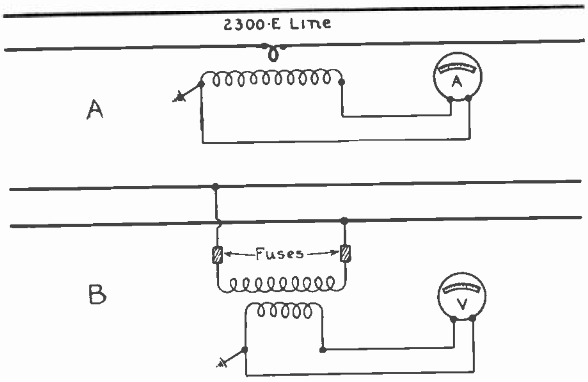

Fig. 144. A shows the connections for a current transformer which is used to operate A. C. ammeters, wattmeters, and current relays. B. Connections for potential transformer used to operate voltmeters, potential elements of wattmeters, potential relays, etc.

Fig. 145 shows a current transformer which is designed for connecting in series with power cables or lines. The cables are connected to the leads of the heavy primary conductor by the copper lugs and bolts shown attached. The leads to the instrument are taken from the two small terminals on the connection block on the lower left of the transformer core.

Fig. 145-A shows a current transformer which is designed for connection in series with a bus bar on a switchboard.

153. CAUTION

As previously mentioned in the Section on A. C. Meters, the current transformer which has its primary connected in a live line **should never be left with its secondary open-circuited.**

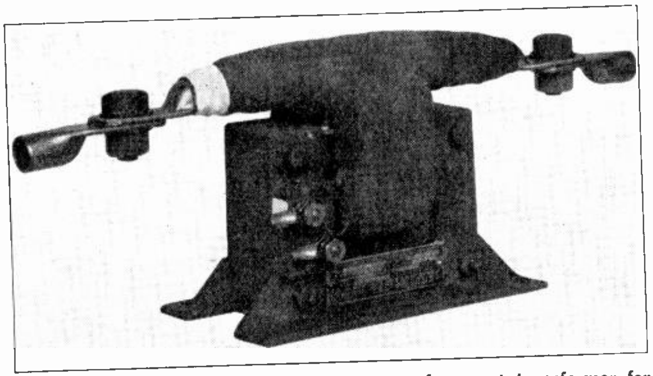

Fig. 145. This photo shows a common type of current transformer for use with cable lines or small bus bars.

Before disconnecting the meter leads or relay leads from the secondary of the current transformer, the transformer secondary should be short-circuited with a good, secure connection. If this is not done, when the instrument is removed there will be a dangerously high voltage built up in the secondary winding of the transformer. This high voltage may puncture the insulation of the transformer secondary winding, or of the meter just as it is being disconnected or reconnected; or it may cause a serious shock to the operator who is making or breaking the connections.

You will note by observation of the diagram in Fig. 144-A that, with one turn in the primary and a considerable number of turns in the secondary, a current transformer resembles a step-up transformer with the secondary as the high-voltage winding. It would act as such if it were not for the fact that the meters and devices connected to the secondary are of very low resistance, and the current which normally flows through the secondary sets up a flux that opposes the primary flux, and thereby limits the amount of induced voltage to a very low value.

This principle was explained in the Section on Principles of Power Transformers.

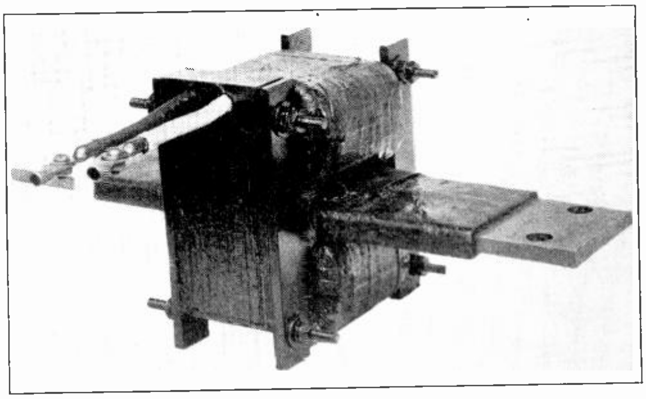

Fig. 145-A. Bus-bar type current transformer for use with large bus bars on switchboards. (Photo Courtesy General Electric Co.)

The short-circuit should always be left on the secondary winding until after the meters or devices have been reconnected to it. This short-circuit will not cause the secondary winding to become damaged or burned by overload because the increased current which tends to flow through the secondary winding, when shorted, immediately sets up a heavy flux that more completely neutralizes the flux of the primary and thereby allows very little voltage to be induced in the secondary as long as its circuit is closed.

If this circuit were left open, however, there would be no current flowing and no secondary flux to oppose the primary field, and this would allow the primary flux to build up to full normal value and induce in the secondary the very high voltage which has been mentioned.

154. POLARITY MARKINGS AND RATIOS

The polarity of current transformers is usually indicated by permanent white markings placed on the primary and secondary leads.

The relative instantaneous directions of the current will be **into the marked primary lead,** and **out of the marked secondary lead.**

Current transformers ratios can be expressed in different ways. One common method is as follows: 80:5, 400:5, 250:5, etc.

These respective indications or markings mean that the maximum secondary rating is 5 amperes when the primary is fully loaded by the number of amperes expressed by the first figure of the rating. In other words, transformers are designed with the various proper ratios so that 80 amperes through the primary will produce a flow of 5 amperes in the secondary; or, in the case of another transformer, 400 amperes flowing through the primary will produce a flow of 5 amperes through the secondary, etc.

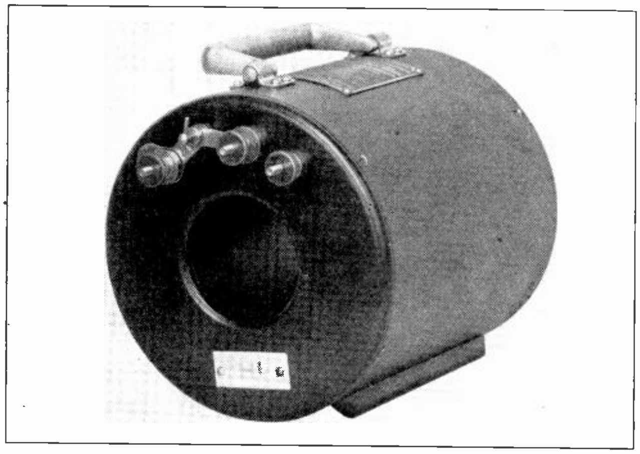

Fig. 146. Portable current transformers of this type are very convenient when making tests on lines or electric machines with portable ammeters and wattmeters. (Photo Courtesy General Electric Co.)

With current transformers of this type it is possible to use ammeters which have windings with a maximum capacity of 5 amperes. The ammeter scale is then calibrated according to the ratio of the transformer so that the meter will indicate the full line current rather than the amount of current actually passing through the meter coil itself.

Another method of expressing current transformer ratios, is as follows: 80:1, 600:1, 1200:1, etc.

The principle involved in this method is the same as that of the transformer ratios previously explained; and ammeters of 5 ampere maximum capacity are used and have the scales calibrated according to the transformer ratio.

155. ADVANTAGES AND APPLICATIONS OF CURRENT TRANSFORMERS

Ammeters for use without current transformers and designed for a flow of more than 100 amperes through their coils, are usually not very accurate and require very heavy and bulky coils to carry the current.

As many alternating current power circuits carry loads of several thousand amperes, current transformers are very commonly used. They serve the same general purpose as ammeter shunts do in direct current circuits, even though the transformers operate on a principle of induced voltage entirely different from that of voltage drop due to resistance in the shunts.

Fig. 146 shows a portable current transformer which can be conveniently used with portable ammeters or wattmeters for making tests on heavy power circuits. This transformer is so constructed that the cable or line on which the current is to be measured can be passed through the hole in the center of the transformer core. The flux around the line conductor is sufficient to operate the transformer secondary and instruments attached.

In cases where the voltage of the line on which the current is to be measured exceeds 500 volts and possibly ranges up into the thousands of volts, it is much safer to use current transformers to operate meters and relays. By using a transformer, the windings of the ammeters or relays are kept insulated from the line voltage.

Some power companies make it a general practice to use current transformers on all lines of 200 volts and over. There is often a tendency on the part of operators and electrical men in the field to overload current transformers by connecting too many instruments on one transformer. This is not good practice, as it causes inaccurate meter readings, particularly where the current elements of wattmeters are connected to the same transformer with ammeters.

Most meters are matched and calibrated to operate with certain current transformers and for accurate readings these should be kept together.

Other types of current transformers are designed to operate overload trip-coils, relays, etc., and these should not be used with ammeters or wattmeters.

156. POTENTIAL TRANSFORMERS

A potential transformer resembles an ordinary single-phase power transformer, except that it is of only a few watts capacity. The primary windings of potential transformers consist of a great number of turns, and are connected across the high voltage lines and protected with special fuses known as potential transformer fuses.

The secondaries are commonly wound for 100 or 110 volts. Fig. 144-B shows the connections for a potential transformer, and the voltmeter properly connected to its secondary. The secondaries of these transformers are also grounded for safety reasons and to immediately ground the high voltage in case of failure of the insulation between the primary and secondary windings.

Voltmeters and the potential elements of wattmeters which are designed for use with potential transformers are wound and constructed the same as voltmeters for lines of 100 or 110 volts, and their scales are calibrated according to the ratio of the potential transformer, so the meters will indicate the full line voltage.

It is quite general practice to use potential transformers for the operation of voltmeters, wattmeters, and potential relays on lines of 200 volts and over.

It is very seldom advisable or practical to use voltmeters directly connected to lines of over 600 volts.

On the left in Fig. 147 is shown a potential transformer for a primary voltage of 220 volts. The terminal markings, H-1 on the primary and X-1 on the secondary, can be seen in this photo.

The view on the right in this figure shows a large oil-insulated current transformer for use with a line of 25,000 volts. The in-going and out-going leads to the primary are both carried through the large porcelain insulating bushing. One lead is in the form of a small rod which goes down through the center of the bushing, and the other lead is in the form of a metal sleeve which surrounds the inner rod but is well insulated from it.

Potential transformers for use on very high voltage lines are also built with their windings immersed in tanks of oil and have two high-voltage insulating bushings for their primary leads, which are connected across the line.

Oil-insulated instrument transformers of this type are commonly installed outdoors in the substation structure where the high voltage lines enter or leave the station.

157. TRANSFORMER TESTS

Three very common tests which you may often be called upon to make on transformers are those for determining the **core loss, copper loss,** and the **regulation** of various power transformers.

These losses and figures on the characteristics of the transformer can usually be obtained from the manufacturers, but the tests for determining them are very simple and are often performed in the field.

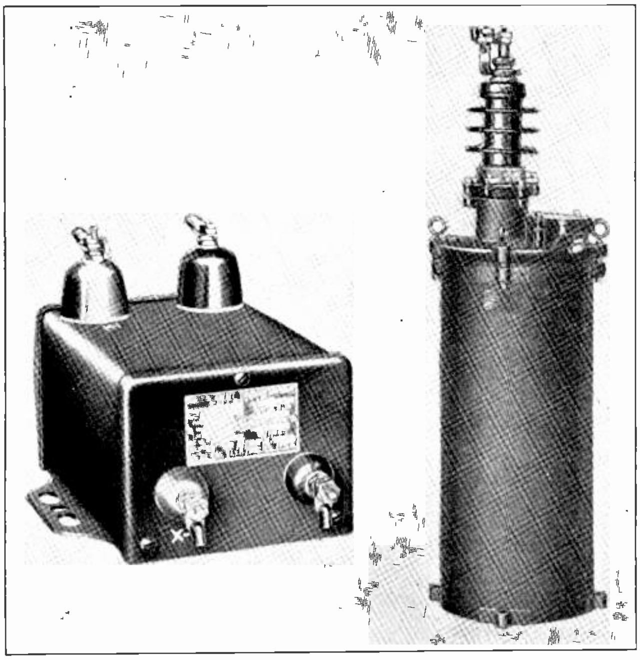

Fig. 147. At the left is shown a small potential transformer with the high-voltage terminals on the top and the low-voltage terminals on the end. Note the polarity markings on the case. On the right is shown a large oil-insulated power-type current transformer.

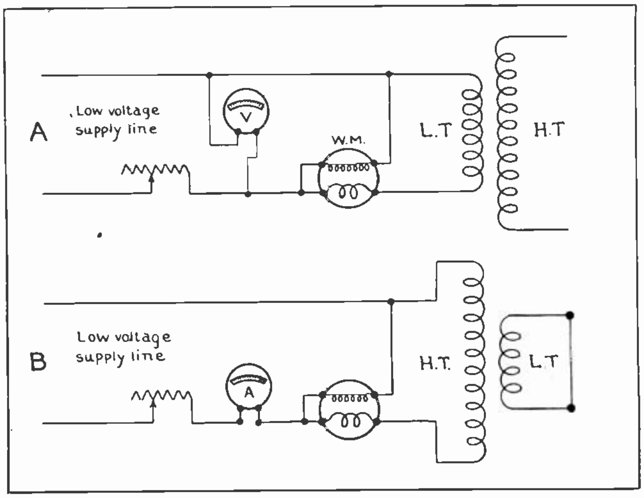

Fig. 148. A shows the method of connecting a voltmeter and ammeter to a transformer to make a core loss test. B shows the connections for making a copper loss test.

The connections for making the core-loss test are shown in Fig. 148-A. When performing this test it is generally more convenient to use the low-tension winding for applying the power, thus avoiding unnecessarily high voltage on the instruments.

For making the core-loss test, the wattmeter and voltmeter of the proper ratings and some form of rheostat are required, and they should be connected as shown in the diagram. The secondary of the transformer should be left open-circuited during the test. The rheostat should be adjusted until normal voltage is applied to the primary winding, and the wattmeter reading will then indicate the core loss of the transformer in watts.

In other words, when the secondary of the transformer is open and not loaded, the energy required to magnetize the core will be the core loss. You will recall from a statement in the earlier part of this section that the core loss of a transformer is practically the same at no load as at full load.

The connections for making the copper-loss test are shown in Fig. 148-B. In this test it it usually more convenient to use the high-voltage winding of the transformer as the primary to be excited. The low-voltage secondary should be short-circuited during the test.

A low voltage is then applied to the high-tension coil and the rheostat is adjusted until the ammeter indicates that the current flow is equal to the full load current rating of the high-tension winding. When this current value is reached, the wattmeter reading will indicate the full-load copper-loss.

With the secondary short-circuited in this manner it is usually necessary to apply only 1 to 3 per cent. of the rated high-tension voltage to bring the current up to full-load value for the high-tension winding.

The regulation of a transformer may be determined approximately by the following method.

First, measure the secondary voltage under full load, with the transformer primary supplied with rated voltage and frequency. When the secondary load is removed, the voltage will rise and the amount of increase should be noted.

This increase, or difference between the full load and no load voltage, divided by the full load secondary voltage will give the per cent. of regulation.

158. FIELD PROBLEMS

In each of the following problems except the last one, the answers are given; but you should carefully work them out, and also make in each case a connection diagram of the equipment mentioned, or that which would be required, just as you would connect it up right on the job.

Suppose that you were to install a bank of three single-phase transformers to supply current to a motor load of 150 h. p. What size of transformers would you install?

It is considered good practice to install about 1 kv-a. of transformer capacity per h. p. of secondary load. This will allow for the loss in the transformers and motors and also for the power factor, which is usually somewhat below unity on a system loaded with motors.

So, as the exact power factor and current ratings of the motors in this case are not known, we should install transformers with a total three-phase capacity of 150 kv-a.

When 150 kv-a. is divided among three single-phase transformers, it will require transformers of 50 kv-a. each.

In another case, suppose you wish to determine the amount of current that can be taken from each secondary line wire of a three-phase bank of transformers which have a total capacity of 600 kv-a. and a secondary voltage of 440 volts.

We know that the apparent watts divided by (volts × 1.732) will give the line current on any phase of the three-phase system.

Then, as apparent watts are equal to 600 kv-a. × 1000, or 600,000 watts, the current will be found in the following manner:

$$I = \frac{600{,}000}{440 \times 1.732}, \text{ or 787 amperes per line conductor.}$$

If on some future job you have a bank of transformers with a step-down ratio of 2:1, with the primary windings connected star to a 440-volt circuit and the secondary windings connected delta, what voltage will be obtained from the secondary line leads?

This problem can be solved in the following manner:

If the transformer primaries are connected star to a 440-volt line, the voltage across each of the primary phase windings will be:

$$440 \div 1.732, \text{ or approimately 254 volts.}$$

Then, if the transformer step-down ratio is 2:1, the voltage across the secondary phase windings will be:

$$254 \div 2, \text{ or 127 volts.}$$

As the secondary windings are connected delta, the line voltage will be the same as the phase-winding voltage, or 127 volts.

If an alternator supplying 6600 volts is connected to the primary of a delta-star bank of step-up transformers which have a ratio of 1:11.55, what will

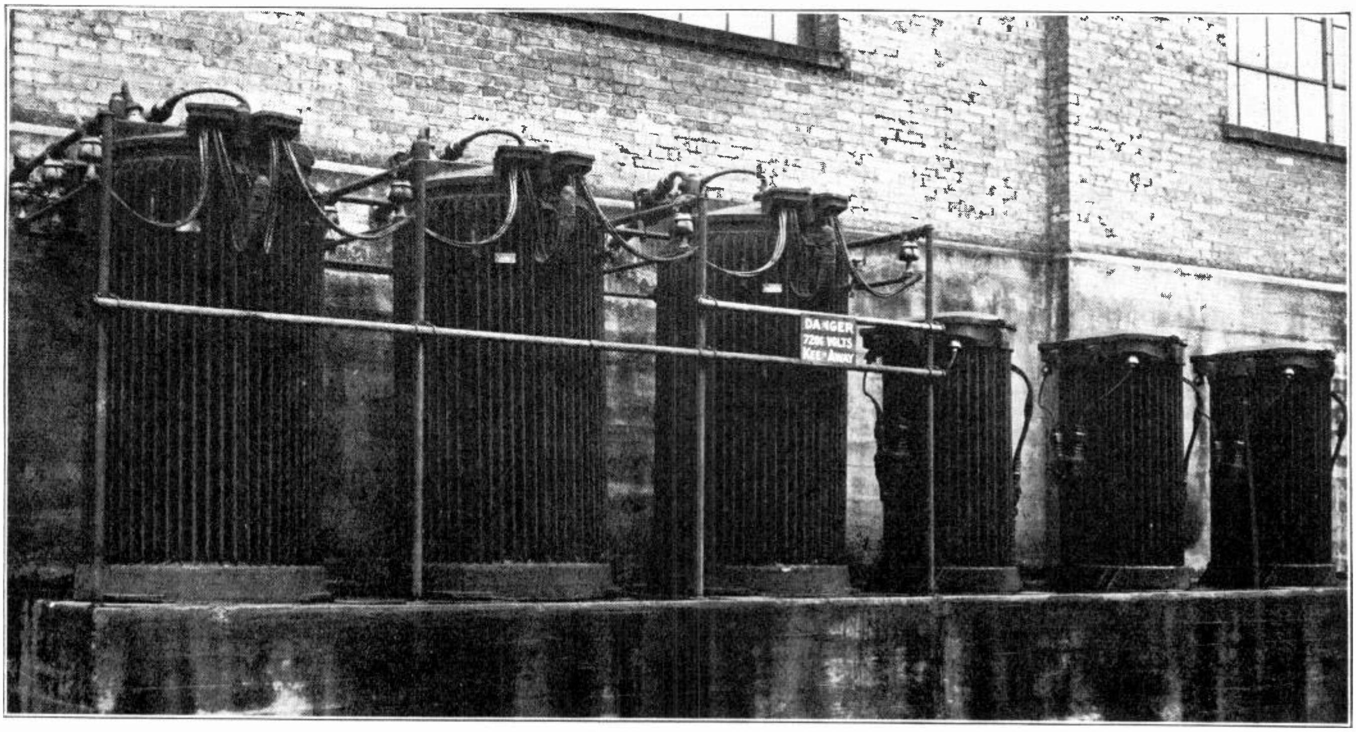

Fig. 149. This photo shows two three-phase banks of transformers of different sizes. Note the manner in which the connections are made. Connections from transformer banks are very frequently run through conduit or load-covered cables to the circuits they are to supply. In some cases connections are made to rigidly supported bus bars which may lead to a switchboard or switching station.

be the high-tension line voltage obtained from the star-connected secondaries of the transformers?

This problem can be solved in the following manner:

If 6600 volts are applied to the delta-connected primaries of the transformers, then the voltages across each of the primary phase windings will be 6600. With a step-up ratio of 1:11.55 the voltage across each of the phase windings on the secondaries of the transformers will be 76,230 volts.

Then, if these secondaries are connected star, the line voltage will be 76,230 × 1.732, or 132,030 volts.

This same line voltage can be obtained with a bank of transformers connected in this manner and having an even ratio of 1:10, by simply increasing the alternator voltage from 6600 to a little over 7622 volts.

Which transformer connections could be used to raise the voltage of a 13,200-volt alternator to 132,000 volts for the transmission line, if the bank of transformers has a step-up ratio of 1:10?

159. MAINTENANCE AND CARE OF TRANSFORMERS

Transformers usually require considerable less maintenance than most other electrical machines; because transformers have no moving or wearing parts, such as bearings, etc.

There are, however, certain important features which should not be overlooked when installing new transformers and also in the regular inspection and care of these devices, to make certain that they are operating under proper conditions.

When installing transformers they should whenever possible be placed in a location where there is plenty of free circulation of fresh air to carry away the heat developed in the transformers.

Transformers are quite often installed in special rooms, known as **transformer vaults,** inside of various buildings. These rooms should be well provided with openings for ventilation, and in many cases it is advisable to have some sort of fan or blower system to constantly circulate fresh air through the transformer vaults.

Where transformers have water-cooling coils in the tanks, the circulation of air around the tanks is not so important; but, even with these types of transformers, a great deal of the heat will be carried away and their operating temperature kept lower if plenty of fresh air can come in contact with the tanks.

When transformers are installed out-of-doors, the air problem will usually take care of itself; but, if the transformers are equipped with water-cooling coils, they should be inspected frequently to see that the circulating water supply is not interrupted by failure of the pumps, and also to see that this water as well as the transformer itself are kept at the proper temperature.

In certain cases where transformers may be temporarily overloaded to maintain service during emergencies, or where conditions make their cooling difficult, they may be kept at safe temperatures by means of fans or blowers to direct air against their tanks or radiators. Sometimes a spray of water against the tanks from a set of perforated pipes will greatly aid in cooling them. The water should, of course, be kept away from high voltage lead-in wires and bushings.

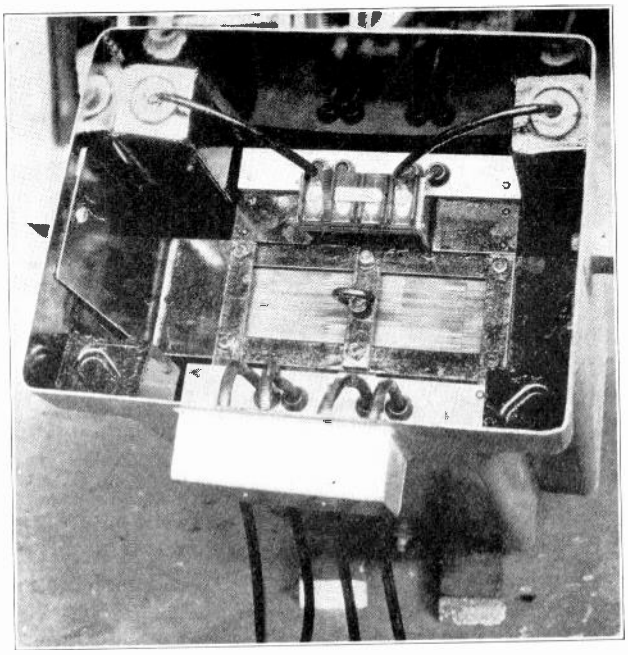

Fig. 150. This photo shows the inside of a small distribution transformer with the oil removed. Many transformers of this type are provided with a terminal block mounted on the core inside of the tank so that the connections can be changed to obtain different voltages.

As previously mentioned, most large transformers are provided with thermometers to indicate the temperature; and for highest operating efficiency, as well as for safety of the insulation of the windings, the temperature should be kept at or below the maximum rating which is usually marked on the transformer name-plate.

160. DRYING OUT TRANSFORMERS

When installing new transformers which have been shipped without the oil in the tanks, or used transformers which have become damp, it is very important to see that the windings and tanks are thoroughly dried out before the oil is placed in the transformers.

This is usually accomplished with some form of air heater and fan arrangement for blowing dry, heated air through the windings. Large transformers may require several days to thoroughly dry out.

In emergency cases the windings may be heated to dry them out by short-circuiting the secondary winding and applying from 1 to 2 per cent. of the normal rated voltage to the primary.

A rheostat is generally used in series with the primary winding to avoid too rapid temperature rises, and the actual drying temperature should not be reached for several hours after starting to apply the low voltage to the primary.

This method of drying out a transformer must be performed with great care at the start or the inner sections of the winding may reach dangerously high temperatures before the outside sections become warmed up.

The principal reasons for drying out transformers so carefully are both to prevent moisture from reducing the dielectrical strength of the insulation on the windings and to prevent any of this moisture from being absorbed by the oil when it is placed in the transformer tank.

The degree of dryness obtained can be determined by measuring the insulation resistance between the winding and core with a megger.

161. EFFECT OF WATER ON TRANSFORMER OIL

The presence of even a very slight amount of water in the oil will greatly reduce its dielectric strength or insulating qualities. The dielectric strength of good transformer oil is usually between 220 and 250 volts per mil. In other words, it will require a voltage of this amount to puncture or break through 1/1000 of an inch of good transformer oil.

The common test for transformer oil is made by placing a sample of the oil in a testing cup or receptacle in which is submerged a pair of round test electrodes one inch in diameter, and with flat faces spaced 1/10 of an inch apart.

When high voltage from a test transformer is applied to these terminals of the test gap, the 1/10 inch layer of oil between them should stand a potential of about 220,000 volts before breaking down. If the oil flashes through at a much lower voltage than this, it indicates the presence of moisture or dirt in the oil.

If oil which has almost no water in it, or we will say not over 1/10 part of water in 10,000 parts of oil by volume, has a breakdown voltage of over 20,000 volts, when water is added to the extent of one part of water in 10,000 parts of oil, the oil will usually break down at less than 10,000 volts; showing that its dielectric strength has been reduced more than one-half by even this very small moisture content.

Only a good grade of mineral oil should be used in transformers. The principal requirements are that such oil should be free from moisture, dust, dirt, and sediment. It should also be free from acid, alkali, and sulphur. It should have a low flash point, and should have the previously mentioned dielectric strength of about 220 volts per mil.

During normal operation of the transformer it is quite probable that the oil will absorb more or less moisture from the atmosphere.

Most transformer manufacturers equip their transformers with air-tight or water-tight insulating bushings around the conductors or leads where they leave the tank, and also with moisture seals under the tank covers. In spite of this, a certain amount of moisture may enter the tank by the "breathing" action which is due to expansion and contraction of the oil with changes of temperature in the transformer, and which causes air to be forced in and out of the transformer tank with these changes in temperature.

Even when transformers are equipped with the air-dryer or moisture-absorbing units in the breather or ventilator previously explained, some moisture may gradually be absorbed by the oil.

The presence of this moisture may not be visible to the eye when the oil is examined, but it can be detected by the voltage-breakdown test.

If a pint of oil and a pint of water are vigorously shaken together in a container and then allowed to stand for a few minutes they will separate because oil is the lighter of the two. Most of the water will settle to the bottom, but a certain number of very small particles of water will be retained in suspension in the oil.

The same condition is met in the case of transformers. Most of the first moisture which enters the tank remains suspended in the oil until the oil can hold no more water, and then the water begins to settle to the bottom of the tank.

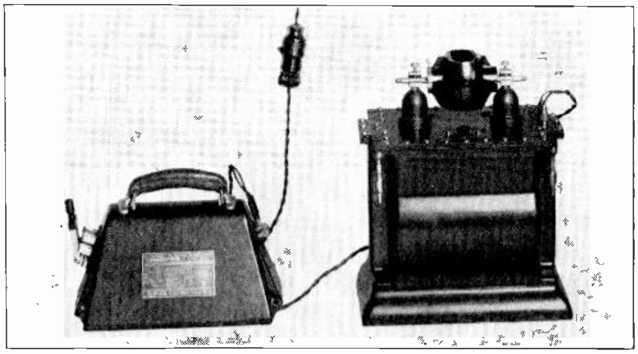

Fig. 151. Portable oil testing outfit consisting of high voltage transformer oil test cup and voltage adjuster. (Photo Courtesy General Electric Co.)

162. TESTING TRANSFORMER OIL

We should never wait for water to appear at the bottom of the tank; but, instead, the oil should be periodically tested by removing small samples from the drain valve at the bottom of the tank and testing these samples in a high-voltage test gap such as previously described.

If, at any time, the oil removed from the bottom of the tank breaks down at voltages below 16,500 on a standard test gap, the oil should be both dried out and cleaned. If this is neglected it may result in the dielectric strength of the oil becoming so low that it will cause a flash-over between the transformer windings and result in serious damage.

Fig. 151 shows a convenient portable oil-testing device which consists of a small high-voltage transformer capable of producing secondary voltages of from 15,000 to 25,000 volts. The oil test cup or receptacle is mounted above the transformer and is attached to the high-voltage terminals. The oil cup is made of an insulating composition and has the metal electrodes inside the cup with their shafts extending through the ends to the transformer terminals.

One of the electrodes is adjustable so that the cup can be accurately set for various tests. There is also provided a voltage adjustment knob, located between the electrode posts. The power required by a test outfit of this kind is so small that it can be operated directly from an ordinary 110-volt lighting circuit.

When testing oil with such a test outfit, the cup is usually filled so that the oil is about an inch above the electrodes, and after allowing sufficient time for the oil to flow between the gap faces and for all bubbles to rise to the top, the voltage is applied, low at first, and gradually increased until the sample breaks down. Several samples are usually tested to obtain average results and avoid mistakes.

163. CLEANING TRANSFORMER OIL

There are three common methods or removing moisture and dirt from transformer oil. These methods are boiling, filtering, and the use of centrifugal separators.

The first method is the least used of the three and is generally only resorted to in emergencies.

Oil **filter presses** are quite commonly used by a number of plants and power companies, and the **centrifugal separator** is very extensively used where large amounts of oil must be cleaned frequently.

To dry the moisture out of oil by boiling is a somewhat crude method but it may occasionally be handy in emergencies. To do this, it is only necessary to heat the oil to a temperature slightly above the boiling point of water, or 212° F. Maintaining the oil at this temperature will gradually boil out the water.

The temperature of the oil should not be raised more than about 20° above the boiling point of water, or the excessive heat may injure the quality of the oil and lower its dielectric strength.

Oil filtering is accomplished by forcing the oil through a series of filter papers. These filter papers are similar to blotting papers. A number of them are held securely clamped in a special press, such as shown in Fig. 152; and oil is forced through these filter papers one after another, by means of an electrically-driven pump.

The filter papers will allow the oil to pass slowly through them, but will stop and hold most of the moisture. They will also stop most of the dirt and sediment which the oil may contain.

A pressure gauge is connected in the oil-circulating system between the pump and the filter press, so that the proper pressure may be maintained on the filter papers. After the pump has been started a few minutes, the pressure should be noted. If at any time during operation the gauge indicates a sudden pressure drop, the pump should be immediately shut down, because the reduced pressure is usually due to some of the filter sheets having been punctured by water.

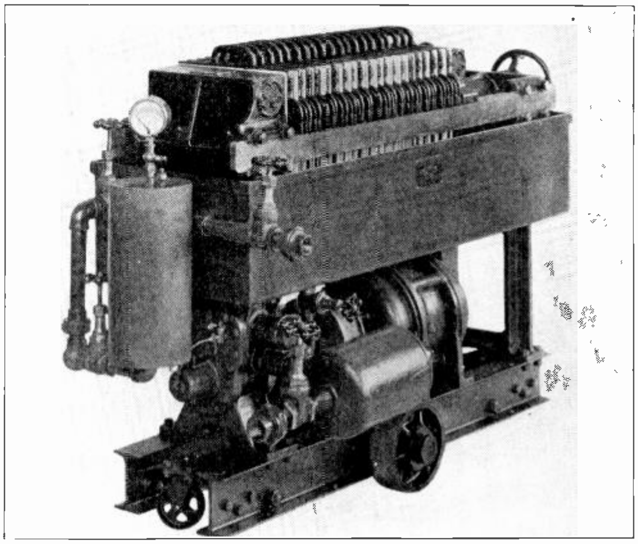

Fig. 152. This photo shows a filter press for cleaning and removing the moisture from insulating oil. Note the motor-driven pump mounted underneath the filter press. (Photo Courtesy General Electric Co.)

It is then necessary to drain the oil from the filter and replace the punctured sheets as well as several adjacent sheets on each side of them. This is done in order to guard against missing a few sheets which have very small punctures that may not be easily seen.

The moisture-laden oil which is drained from the filter each time it is shut down, should be set aside and filtered at the end of the run. This will eliminate a lot of unnecessary shut downs, as a considerable amount of the water may have settled out of the bad oil during the time it was left standing.

Centrifugal oil separators such as the one shown in Fig. 153 separate the oil and water by whirling them at high speed, causing the two to leave the separator disks at different levels because of the different weights or specific gravities of oil and water.

This method is very rapid, convenient, and clean, and is very commonly used in large power plants and by power companies which have to clean large amounts of insulating oil from transformers, oil switches, etc.

Large transformers are usually provided with oil drain connections at the bottom of the tank and refilling connections at the top. It is not necessary to take a transformer out of service in order to clean the oil, as connections can be made to both the bottom and top of the tank; so that the oil can be run through the filter press or centrifugal separator and the clean oil returned to the top of the tank as fast as the dirty oil is withdrawn from the bottom.

By this method some of the oil may, of course, be run through the cleaning process several times; but, as soon as the sufficient moisture and dirt have been removed so that a test sample of the oil in the transformer tests up to the proper voltage again, the cleaning process can be stopped and the filter or separator disconnected from the transformer.

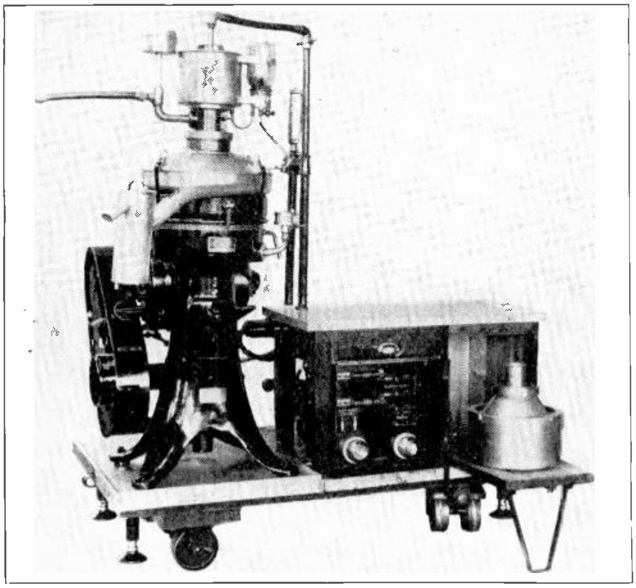

Fig. 153. Motor-operated centrifugal oil purifier which separates water and dirt from the oil by revolving them at high speeds. (Photo Courtesy General Electric Co.)

Sometimes it is necessary to take a transformer out of service and thoroughly clean the tank and windings to remove all sediment and dirt from the bottom of the tank and also any accumulations of dirt or oil sludge which may be clinging to the windings and clogging up the oil circulation spaces, thus preventing proper cooling and causing the transformer to overheat.

There are many thousands of small and large transformers in use in power plants, substations, and industrial plants today; and it is because you will undoubtedly have frequent occasion to use a good working knowledge of these devices that their operating principles, connections, and care have been quite thoroughly covered in this section.

This subject is of sufficient importance so that you should make sure that you have a thorough understanding of the material covered in this section. You should also be very thorough in making the various important tests and connections on the transformers in the A. C. Shop Department of your course.

COYNE

Electrical School

CHICAGO ~~ ILLINOIS

ESTABLISHED 1899

ALTERNATING CURRENT POWER
AND
A. C. POWER MACHINES

Section Five

Alternating Current Motors
Types, Construction, Principles, Characteristics
Single Phase and Polyphase Motors
Squirrel-Cage Induction Motors, Slip Ring Motors,
Synchronous Motors
Special Motors
Power Factor Correction
Proper Selection and Loading of A. C. Motors
Static Condensers, Synchronous Condensers
Power Factor Correction Problems
Calculation of Condenser Sizes

ALTERNATING CURRENT MOTORS

By far the greatest part of all the electrical energy generated is used for power purposes, and most of this mechanical power is developed by alternating current motors.

A. C. motors are made in sizes from 1/300 h. p. and less, up to 60,000 h. p. and over, and they can be built even larger if any need for more powerful motors arises.

A. C. motors are made to meet almost every conceivable need and condition in the driving of machinery and equipment of all kinds. Some of the latest type A. C. motors are designed to produce excellent starting torque and give a wide range of speed control, and many other desirable characteristics which it was formerly thought possible to obtain only with D. C. motors.

Alternating current motors also have the advantage of practically constant speed; and the A. C. squirrel-cage induction motor, which is the most commonly used type, has no commutator or brushes and therefore eliminates all sparking and fire hazard and reduces the number of wearing parts.

A. C. motors are quiet, safe, and efficient in operation, and very convenient to control, and are therefore an ideal type of power device. A child can start or stop a unit of several thousand h. p. by merely pressing a button of an automatic remote controller such as is used with many large A. C. motors.

A. C. electric motors are rapidly replacing steam and gas engines and other forms of power in older factories; and practically all new factories, mills, and industrial plants are completely operated by electric motors. Hundreds of thousands of A. C. motors are in use in machine shops, wood working shops, saw mills, automobile factories, and industrial plants of all kinds.

Fig. 154 shows a group of A. C. motors driving machines in a textile mill, and Fig. 155 shows two large motor-driven planers in a wood working plant.

Motor installation and maintenance provides one of the greatest fields of opportunity in the entire electrical industry, for trained men to cash in on their knowledge in interesting and good paying work.

164. TYPES OF A. C. MOTORS

Alternating current motors are made in a number of styles or types, depending upon the class of service and type of power supply they are intended for. The most common of these are the **repulsion, induction,** and **synchronous** types.

Repulsion motors are used on single-phase circuits only, but induction and synchronous motors are made in single-phase, two-phase, and three-phase types.

Single-phase motors are most commonly made in sizes from ½ to 10 h. p., although in a few cases larger ones are used. They are usually wound for circuits of 110, 220 or 440 volts.

Two-phase motors are still in use to some extent in a few older plants and factories, but the great majority of A. C. motors are three-phase. Three-phase motors are commonly made in sizes from ½ h. p. to several thousand h. p. each, and can be made as large as any present requirements demand.

Fig. 156 shows a 3000-h. p., A. C. induction motor in use in a modern steel mill. The control panel is shown at the left of the motor.

165. VOLTAGE RATINGS AND SPEEDS

The majority of three-phase motors are operated at 220, 440 and 550 volts, but many of the larger ones of several hundred h. p. and up, are designed for voltages of 1100, 2300, and up to 12,000 volts.

Medium-sized A. C. motors are commonly made to operate at speeds ranging from 900 to 3600 R.P.M. and very large motors operate at lower speeds, from 200 to 600 R.P.M. Very small single-phase motors of the repulsion or series universal type are made to operate at speeds from 4000 to 12,000 R.P.M.

Power motors of the higher speed types develop more h. p. for a given size than the low speed motors do.

166. CONSTRUCTION FEATURES AND GENERAL PRINCIPLES

A. C. motors are also made with various types

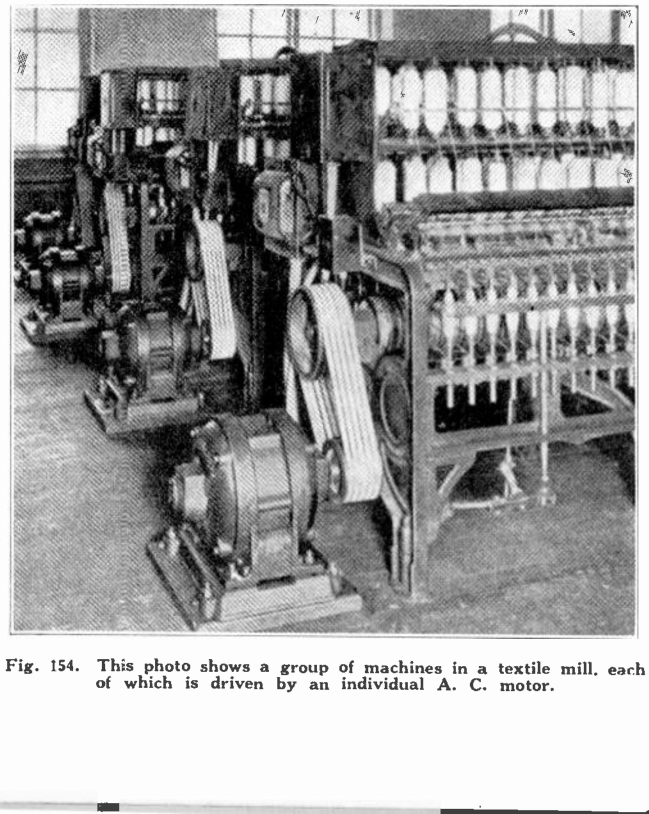

Fig. 154. This photo shows a group of machines in a textile mill, each of which is driven by an individual A. C. motor.

of open and enclosed frames, to adapt them to uses in various locations and under various conditions.

Fig. 157 shows a 5-h. p., three-phase, 220-volt, induction motor of a common type, such as is used by the tens of thousands in this country alone for turning the wheels of industry.

Fig. 158 shows an A. C. motor with an enclosed-type frame, which keeps all dust and dirt from its windings.

The constructional features and general operating principles of A. C. motors have been covered in this Reference Set in Section Two of Armature Winding, and so they need not be repeated in detail here. It will be a very good plan for you to carefully review Articles 66 to 75 inclusive and to re-examine Figs. 45 to 57 in Section Two of Armature Winding, and get these points well in mind again before proceeding further with this section.

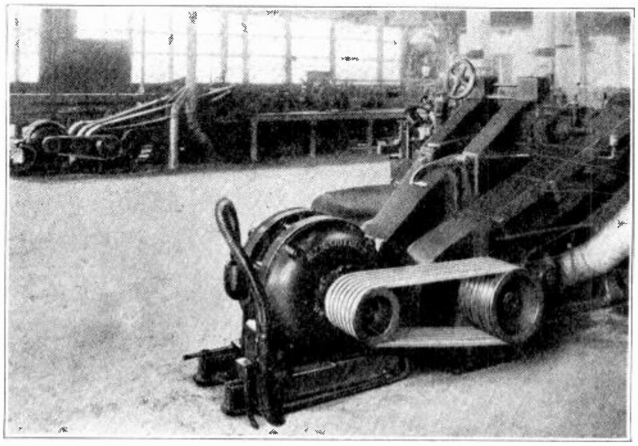

Fig. 155. An A. C. induction motor in use for driving a woodworking machine. The motor is connected to the machine by means of a special rope drive. (Photo courtesy Allis-Chalmers Mfg. Co.)

You have already learned that the principal parts of ordinary A. C. induction motors are the stator and rotor.

You will recall that the stator is commonly connected to the line and receives alternating current which sets up a revolving magnetic field around the inside of the stator winding. This revolving flux cuts across the bars or windings of the rotor, inducing a secondary current in them, and the reaction between the flux of the rotor currents and that of the revolving stator field produces the turning force or motor torque.

Fig. 159 shows the stator of an A. C. induction motor, and Fig. 160 shows a squirrel-cage rotor for the same type motor. Fig. 161 shows a sectional view of an induction motor, with the rotor in place inside the stator core.

Some A. C. induction motors have wire windings instead of bars such as are used on squirrel-cage rotors. These wire-wound rotors are called **phase-wound** rotors and will be explained in later paragraphs.

167. MOTOR CHARACTERISTICS

Each of the different types of A. C. motors has certain different characteristics with respect to their starting torque, load "pull out" torque, speed regulation, efficiency, etc. It is very important for you to know these different characteristics and to be able to compare them for various motors, so you will be able to select the proper motors for the various power drives and applications you may encounter on the job.

Some of these motor characteristics you are already familiar with from your study of D. C. motors; others of them apply only to A. C. motors and are covered for the first time in this section.

Motor characteristics depend largely on their design, and therefore the characteristics of any certain type of motor can be varied considerably by the manufacturers. Motors are available in common types with the required characteristics for most any power need, and for special requirements the designers and manufacturers can build motors of just the proper type to fit the needs of any certain job.

In the following pages we shall take up each common type of A. C. motor separately, and thoroughly explain its principles, characteristics, and applications.

Before doing this, however, there are a few general terms and expressions which apply to all A. C. motors and with which you should be familiar. These terms will be frequently used in explaining the various motors, and if you will carefully familiarize yourself with them now, it will make the following material much easier to understand.

168. SYNCHRONOUS SPEED

The term **synchronous speed** as used in connection with A. C. motors refers to the speed in R.P.M. of the rotating magnetic field which is set up around the stator by the current supplied from the line.

Synchronous motors revolve at the same speed as the rotating magnetic field in their stators, and thus maintain an absolutely constant speed as long as the frequency of the line current remains unchanged.

The speed of the rotating magnetic field of any A. C. motor and the operating speed of synchronous motors depend upon the frequency of the current on which they operate and the number of poles in their stator winding.

This synchronous speed can always be found by the simple formula:

$$S = \frac{120 \times f}{p}$$

In which:

S = synchronous speed in R.P.M.
f = frequency in cycles per sec.
p = number of poles in the motor.
120 = twice the number of seconds in one minute.

The constant 120 is used instead of 60 seconds per minute, because a pole of the rotor must pass one pair of poles during each cycle.

For example, if a four-pole motor is operated on

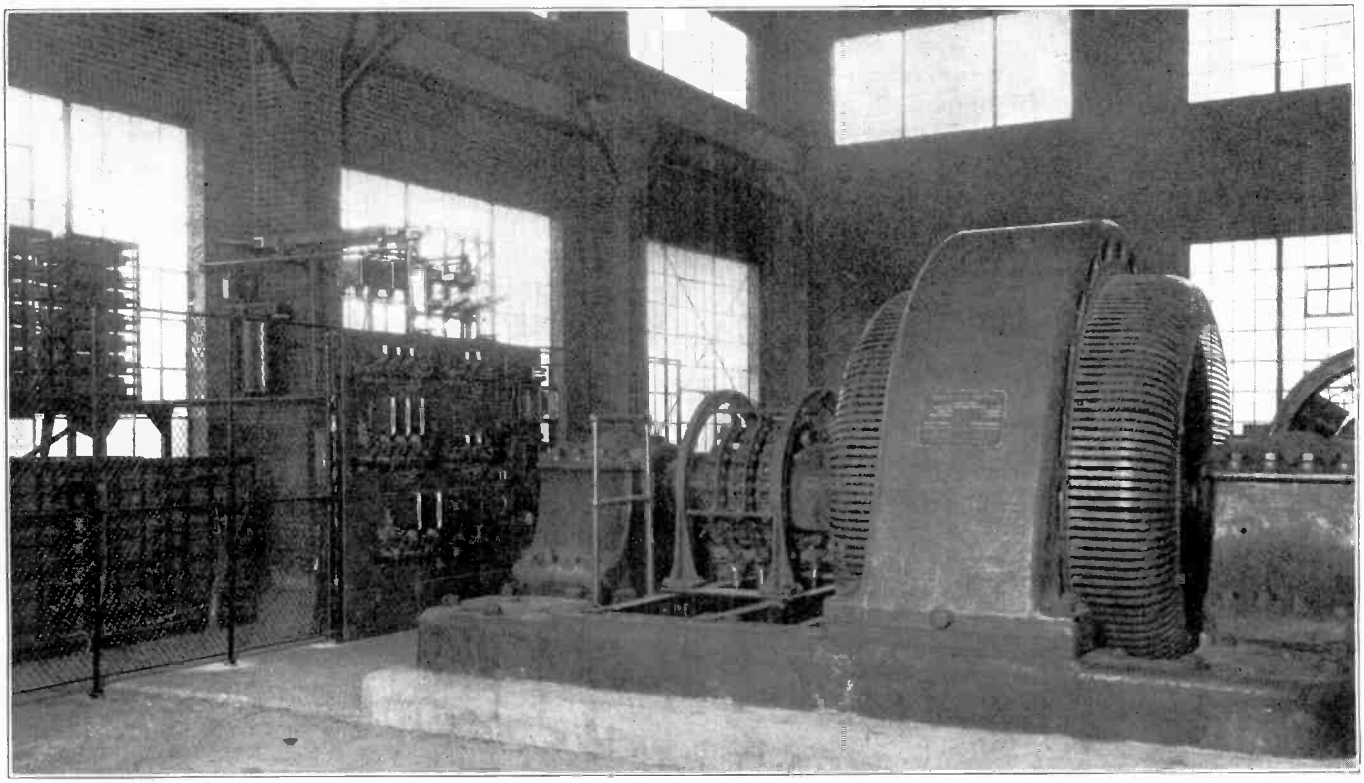

Fig. 156. This photo shows a 3000-h. p., 375 RPM, A. C. induction motor in use in a steel mill. Note the control panel and resistors for starting and speed regulation shown in the left of this view. (Photo Courtesy General Electric Co.)

a 60-cycle circuit, its synchronous speed will be:

$$S = \frac{120 \times 60}{4}, \text{ or } 1800 \text{ R.P.M.}$$

169. SLIP

A. C. induction motors never operate at exactly synchronous speed, as their rotors must always turn at slightly lower speed than the rotating magnetic field, in order that the lines of force will cut across the rotor conductors and induce the necessary current in them.

This difference between the actual operating speed of induction motors and the speed of their rotating magnetic fields is called the **slip** of the motor. The slip is generally expressed in per cent. of synchronous speed.

For example, if a six-pole induction motor is operated on a 60-cycle circuit, it will have a synchronous speed of 1200 R.P.M., but its actual speed when fully loaded is only 1140 R.P.M.

To find the per cent. slip, we can divide the amount of slip by the synchronous speed, or in the case of the motor just mentioned, 1200 — 1140 = 60 R.P.M. of slip, and $\frac{60}{1200} = .05$, or 5%, slip.

The slip of a motor will vary with the amount of load. Increasing the load causes the rotor to slow down a little and allows the magnetic field to cut across the rotor conductors more rapidly, and thereby develop in the rotor the increased amount of induced current needed to maintain the added torque for the heavier load.

The slip of various induction motors usually ranges from 2 to 8 per cent., according to the size and type of motor and the amount of load connected to it. The larger motors have less slip than small ones do.

170. TORQUE: STARTING, RUNNING and PULL-OUT

You have already learned that the term **torque** applies to the twisting or turning effort developed by a motor. Torque is expressed and measured in

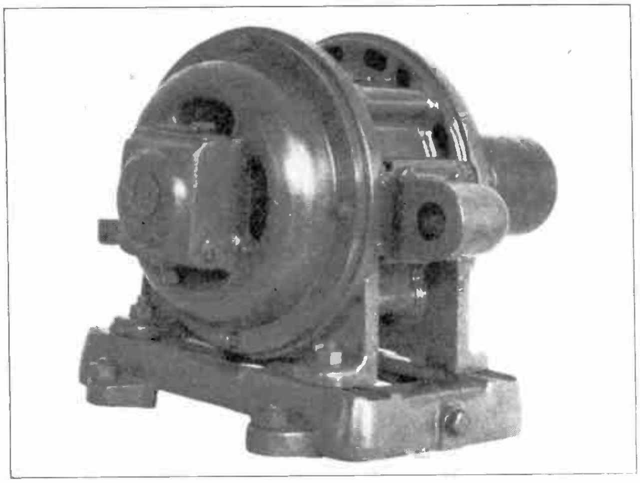

Fig. 157. Common type of 5-h. p. A. C. induction motor. Motors of this type are used by the thousands in factories and industrial plants throughout the country. (Photo courtesy General Elec. Co.

pounds-feet; a torque of twenty pounds-feet being equal to a pull of 20 lbs. at a radius of one foot, or a pull of 10 lbs., at a radius of 2 feet, etc.

You have also learned that the important periods of torque to consider in selecting motors of proper characteristics, are: the **starting torque, running torque,** and **pull-out** or **stalling torque.**

The running torque of a motor is taken as a base and the starting and stalling torque are compared with it, and expressed as a certain percentage of the running torque. For example, if a motor has a running torque of 15 pounds-feet, and a starting torque of 30 pounds-feet, the starting torque is two times the running torque, or 200%.

As the running torque is used as a base for comparison, it is important to have some means of determining this torque. The running torque of a motor can be found by the following formula.

$$T = \frac{5252 \times H.P.}{R.P.M.}$$

In which:

T = running torque in pounds-feet.
5252 = constant.
H.P. = horse power rating of motor.
R.P.M. = motor speed in rev. per min.

As an illustration, if a 10 h. p. motor has a speed of 1800 R.P.M., its running torque would be:

$$\frac{5252 \times 10}{1800}, \text{ or } 29.2 \text{ — pounds-feet}$$

The **starting torque** or turning effort exerted by a motor during starting is very important and should always be considered when selecting motors that are to start up under heavy loads. The starting torque of common induction motors will vary from 2 to 5 times the running torque, according to the design of the motor and the amount of line voltage applied during starting.

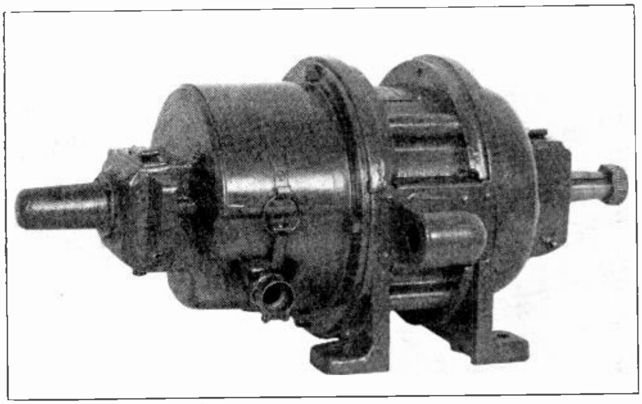

Fig. 158. A. C. induction motor with totally enclosed frame to keep out dust and dirt from the windings and also prevent fire and explosion hazard. (Photo courtesy General Electric Co.)

The starting torque of an induction motor varies directly with the square of the applied voltage during starting.

The **pull-out** torque of a motor is the torque required to cause the motor to pull out of step with the line frequency, slow down, and come to a complete stop if the overload which exceeds the pull-out torque is left on the machine. In other words, the pull-out torque expresses the ability of a motor to carry overloads without stalling.

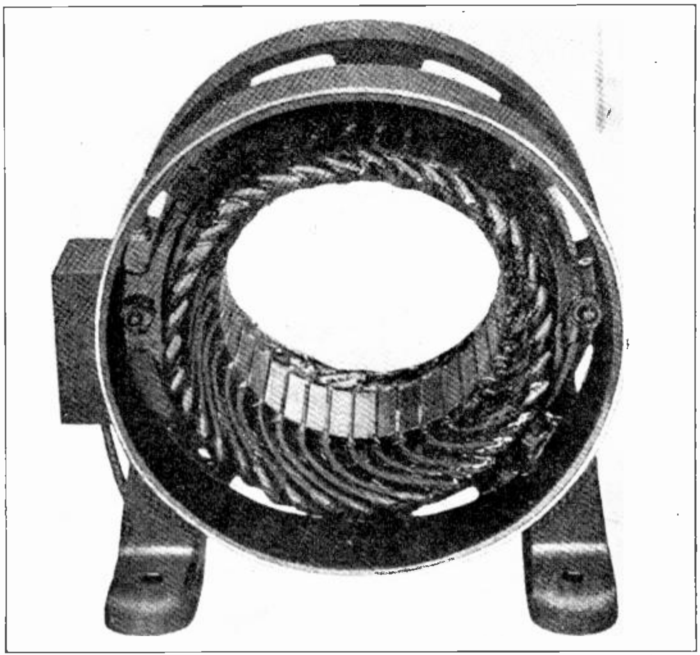

Fig. 159. This view shows a stator of an induction motor with the end shields and rotor removed. When A. C. is applied to the winding a revolving magnetic field is set up around the inside of the stator core.

The pull-out torque of common A. C. motors ranges from 1½ to 3 times full load torque.

The starting torque, running torque, or pull-out torque of an A. C. motor can be found by means of the brake horse-power test which was explained in Articles 142 and 143 in Section Three of Direct Current.

171. EFFICIENCY AND POWER FACTOR

As you have already learned, the efficiency of any motor is the ratio of its output to input, or

$$\text{eff.} = \frac{\text{Mech. h. p. output}}{\text{Elec. h. p. input}}$$

The mechanical h. p. output of any motor can be determined by means of the brake h. p. test, and the electrical h. p. input can be found by using a wattmeter or voltmeter, ammeter, and power factor indicator, and then dividing the watts by 746.

The efficiency of A. C. motors varies with their design and also with their size. The efficiency of common induction motors generally ranges from about 78% to 82% on motors of 1 to 5 h. p., and up to 90% or better on motors of several hundred h. p.

The efficiency of any A. C. motor is always higher when the motor is operated at or near full load, and becomes much lower when the motor is operated lightly loaded.

This is also true of the power factor of A. C.

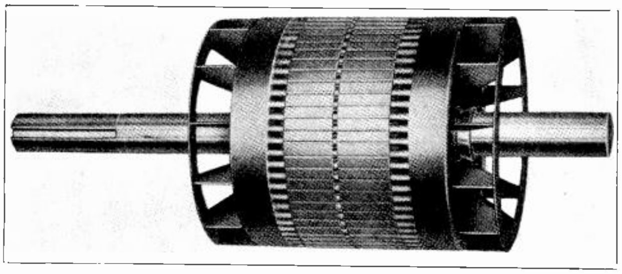

Fig. 160. Squirrel-cage rotor from an A. C. induction motor. Note the manner in which the bars are imbedded in the core slots and also note the ventilating fans at the ends of the rotor.

motors. The power factor of large motors is usually higher, ranging from 78% to 85% for motors of 1 to 5 h. p. to 93% for motors of 200 h. p. and up. The power factor of an induction motor is much better when the motor is fully loaded, and is very poor when motors are operated lightly loaded or without any load.

The method of determining the power factor of any A. C. machine or device was explained in Articles 36 to 41 of Section One on Alternating Current.

Very often in ordinary field problems, where approximate figures are all that are required, if the power factor and efficiency of certain motors are not known, they are both assumed to be about 80% for induction motors of 1 h. p. to 10 h. p., and about 88% for motors of 10 to 50 h. p.

Synchronous A. C. motors can be made to operate at 100% or unity power factor, or even at a leading power factor if desired, by properly exciting their D. C. fields. This will be explained in the section on synchronous motors.

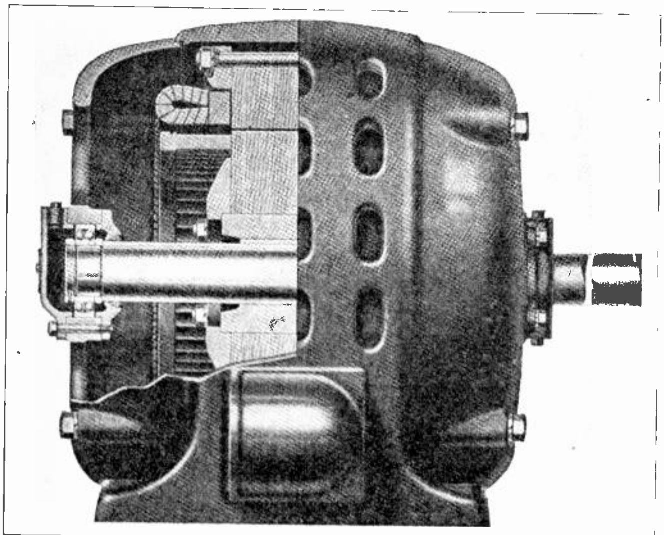

Fig. 161. Sectional view of a squirrel-cage induction motor showing the position of the rotor and bars with respect to the stator core and winding.

172. HORSEPOWER, VOLTAGE and FREQUENCY RATINGS

Motors as well as other electrical machinery have their load ratings or maximum output capacity determined by the heat developed in them. A. C. motors heat up due to copper losses and core losses, as explained in the section on transformers. The horse power rating of any A. C. motor is the load it can carry continuously without overheating.

Unless otherwise specified, motors are usually rated at full load with a 40° C. rise in temperature. Most A. C. motors are designed to carry overloads of not over 25% for periods of 2 hrs. with a temperature rise not exceeding 55° C.

Nearly all modern motors have their h. p. ratings and temperature rise limits stated on their name-plates.

The voltage given on the name-plate of a motor is the proper voltage at which the motor should be operated. Practically all ordinary A. C. motors are designed to give full-load rating as long as the voltage does not vary more than 10% above or below normal, provided other conditions are normal.

A. C. motors will develop full rated h. p. on frequencies not exceeding 5% variation above or below the normal frequency for which they are designed, provided the voltage and other conditions are normal.

If the voltage and frequency of the line are both off normal, their combined variation should not exceed 10%.

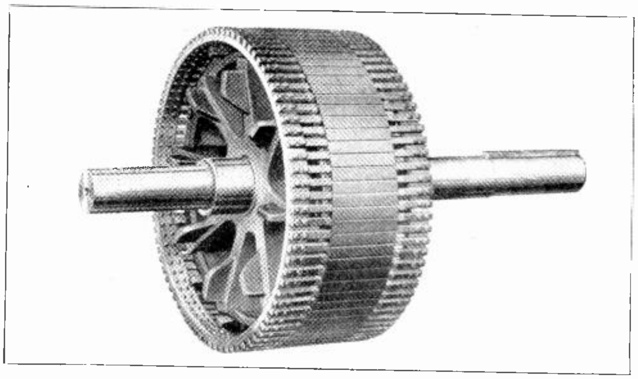

Fig. 161-A. This photo shows an excellent view of a squirrel-cage rotor using square bars which are riveted to heavy end rings.

173. CURRENT RATINGS

The name-plate current rating of an A. C. motor refers to the current required by the motor at full load. This current can also be found by placing an ammeter in any one of the line leads to the motor when it is operating at full load.

For example, a three-phase motor having a name-plate rating of 25 amperes will give an ammeter reading of 25 amperes in each of the three line leads to the motor, when operating at full load.

The approximate current of a three-phase motor can easily be determined by the following formula:

$$I = \frac{\text{h. p.} \times 431}{\text{eff.} \times \text{P. F.} \times \text{E}}$$

This is a simplified formula used to shorten the working of such problems. The current can also be found by first converting the h. p. into watts and dividing this by the product of efficiency and power factor to get the apparent power; and then using the three-phase current formula given in Article 45 of Section One on A. C.

The table in Fig. 162 gives the approximate currents for standard A. C. squirrel-cage induction motors of different h. p. and voltage ratings, and of single, two, and three-phase types.

Special squirrel-cage motors with high reactance rotors and motors with phase-wound rotors may take from 1 to 5 amperes more than the current ratings given in the table for the same h. p. and voltage.

174. SINGLE-PHASE MOTORS

Single-phase motors are quite extensively used in small sizes, ranging from ¼ h. p. or less to 10 h. p. for general purposes. Special single-phase motors for railway service are sometimes made as large as several hundred h. p., but for general industrial power purposes they are seldom made larger than 10 h. p.

Small single-phase motors from ⅙ to ½ h. p. find a very wide application in the operation of small power-driven machines in homes and small shops, where it is desirable to operate these devices from the ordinary single-phase lighting circuits.

Washing machines, electric ironers, oil burners, refrigerators, fans, pumps, drill presses, etc., are commonly driven by motors of this type.

Some idea of the great extent to which fractional h. p. single-phase motors are used can be obtained from the fact that hundreds of thousands of new motors of this type are manufactured each year.

For operating machines or equipment requiring more than one h. p., it is seldom advisable to use single-phase motors if three-phase service is available, as the efficiency and power factor of single-phase machines is considerably lower than with three-phase motors. For a given horse power, a single-phase motor must be considerably larger than a three-phase motor of the same rating.

Approximate Currents taken by Standard Squirrel Cage Motors.
(Full Load)

Size of Motor in H.P.	110 Volts			220 Volts			440 Volts			550 Volts			2200 Volts		
	1 Ph	2 Ph	3 Ph	1 Ph	2 Ph	3 Ph.	1 Ph	2 Ph.	3 Ph.	1 Ph	2 Ph	3 Ph.	1 Ph	2 Ph	3 Ph
⅙	3.34			167											
¼	4.8			24											
½	7.	4.3	5	35	2.2	2.5		1.1	1.3		.9	1.			
¾	9.4	4.7	5.4	4.7	2.4	2.8		1.2	1.4		1.0	1.1			
1	11.	5.7	6.6	5.5	2.9	3.3		1.4	1.7		1.2	1.3			
1½	15.2	7.7	9.4	7.6	4.	4.7		2	2.4		1.6	2.			
2	20	10.4	12	10	5	6		3	3		2.	2.4			
3	28			14	8	9		4	4.5		3	4			
5	46			23	13	15		7	7.5		6	6			
7½	68			34	19	22	17	9	11		7	9			
10	86			43	24	27	21.5	12	14		10	11			
15					33	38		16	19		13	15			
20					45	52		23	26		19	21			
25					55	64		28	32		22	26		6	7
30					67	77		34	39		27	31		7	8
40					88	101		44	51		35	40		9	10
50					108	125		54	63		43	50		11	13
60					129	149		65	75		52	60		13	15
75					156	180		78	90		62	72		16	19
100					212	246		106	123		85	98		22	25
125					268	310		134	155		108	124		27	32
150					311	360		155	180		124	144		31	36
200					415	480		208	240		166	195		43	49

Fig. 162. The above convenient table gives the approximate current per phase required by common squirrel-cage motors of different sizes and different voltages.

Single-phase motors are made in several different types, the most common of which are: **split-phase, repulsion, repulsion-induction,** and **series universal motors.**

Another type sometimes used is known as the **shaded-pole,** single-phase, induction motor.

Straight single-phase motors can be made with just one winding in the stator, and a few of the older type motors were made this way. A motor of this type will not start itself, but if it is started by hand or by some other method, it will develop torque due to the reaction between the stator flux and the flux of the current induced in the rotor once it is started to turn.

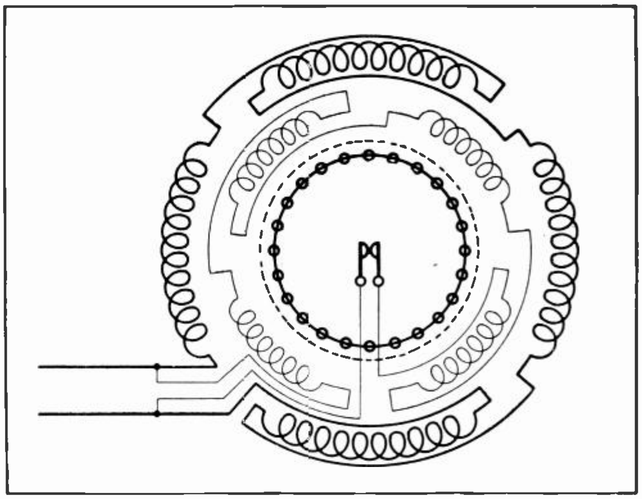

Fig. 163. This sketch shows the connections of the starting and running windings of a single-phase, split-phase A. C. motor.

175. SPLIT-PHASE, SINGLE-PHASE MOTORS

The split-phase principle is used to make single-phase motors self-starting and is in reality a simple method of obtaining a sort of polyphase winding and field.

One of the most common ways of obtaining this split-phase effect is by winding the stator with two sets of coils, the poles of which are displaced from each other by 90°. The main winding is known as the "running" winding, and the starting winding, which consists of fewer turns of smaller wire, is used only during the starting of the motor.

As soon as the motor is nearly up to speed, the starting winding is disconnected and cut out of service by a centrifugal switch, as explained in Articles 72 and 73 in Section Two of Armature Winding.

Fig. 163 shows a simple schematic diagram of a single-phase, split-phase induction motor. The running winding is shown by the heavy lines and the starting winding by the lighter lines. The squirrel-cage rotor is represented by the circular ends of the bars which are shown arranged in the circle in the center of the diagram and are all short-circuited together by a ring. The dotted circle represents the air-gap or division between the stationary and rotating members of the machine.

176. SPLIT-PHASE MOTOR PRINCIPLES

You will recall from the explanation given in Section Two of Armature Winding that the current which flows in the starting winding of a split-phase motor is nearly 90° out of phase with that in the running winding, because of the different amounts of inductance and resistance in these two windings.

This causes the maximum current and flux to occur in these poles a fraction of a second earlier than in the poles of the running winding and produces a sort of shifting or rotating magnetic field around the stator. This rotating flux cuts across the bars or windings in the rotor and induces in them a heavy secondary current at low voltage.

The reaction between the stator flux and the flux of the rotor currents sets up the starting torque required to rotate the motor and bring it up to speed. After the rotor is turning at full speed the split-phase effect and starting winding are not necessary, as the normal reaction between the flux of the moving rotor conductors and the alternating flux of the stator will then maintain the running torque.

The centrifugal switches of motors of this type are arranged with weighted contacts or segments which are thrown apart by centrifugal force when the motor reaches full speed. The contacts of these switches are connected in series with the starting winding, as shown in Fig. 162; so they keep this winding open-circuited as long as the motor continues to run at full speed.

When the motor is stopped or slows down below a certain speed, the centrifugal force on the switch elements is reduced and a spring causes the contacts to again close and bring the starting winding back into service.

177. ROTOR CONSTRUCTION

Fig. 164 shows the squirrel-cage rotor of a small single-phase motor, and also the centrifugal switch which is attached to the plate on the right-hand end of the rotor. The copper bars of the rotor shown in this view are imbedded in slots in the laminated rotor core. The narrow openings of these slots can be noted in the figure.

The bars are, of course, too large to be inserted through these openings and are therefore inserted endwise through the slots. The end rings which short-circuit the bars to complete the closed circuits under each pole of the stator winding are shown fitted tightly to the sides of the laminated core. These end rings are securely attached to the bars by riveting the bar ends tightly into the holes in the rings or by brazing or soldering them in.

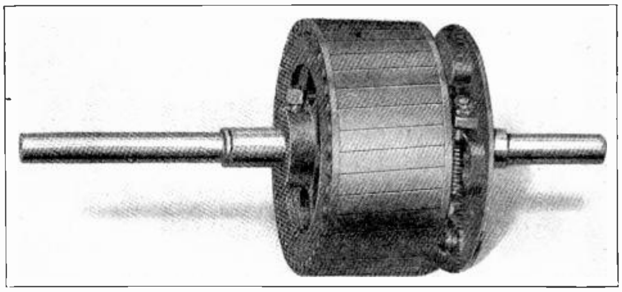

Fig. 164. Small squirrel-cage rotor such as used in single-phase induction motors. Note the centrifugal switch mechanism on the right end.

In some cases the squirrel-cage element complete, consisting of the bars and end rings, is cast from aluminum in one piece within the rotor core. On large squirrel-cage motors the bars are sometimes bolted or welded to the end rings.

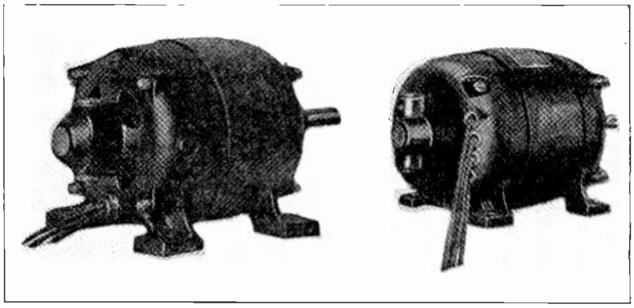

Fig. 165. Two small fractional h. p. A. C. motors of the single-phase, Split-phase type. There are millions of A. C. motors of approximately this size in use today.

The bars of squirrel-cage rotors are usually not insulated from the slots, as the copper or aluminum from which the bars are made is of so much lower resistance than the core iron that the low-voltage induced currents practically all flow through the bars, because they afford the easier path. In some cases, however, the rotor bars are insulated with a layer of stiff paper around them.

Fig. 165 shows two common types of single-phase split-phase motors of fractional h. p. size. Note the four leads which are brought out of each of these motors, two of which are the leads to the starting winding and two to the running winding.

To reverse a split-phase motor of this type it is necessary to reverse either the starting winding or the running winding leads. Some single-phase motors have their windings arranged so the coils can be connected either in series or parallel for operation on either 110 or 220 volts, and motors of this type also have four leads brought out of the frame.

The standard direction of rotation is clockwise when the motor is viewed from the end on which the pulley is placed or the end which has the shaft extension for the pulley.

178. CONDENSER TYPE SPLIT-PHASE MOTORS

The split-phase principle can be applied to single-phase motors by the use of a condenser or an inductance placed in series with one section of the stator winding. The leading or lagging current which is set up in the circuit by the condenser or inductance produces the separation or split-phase effect of the magnetic fields which occur in the different sections of the motor winding.

Figs. 166-A and B show two different methods used with split-phase motors of this type. These motors use a three-phase winding and depend upon the third wire from the condenser or inductance to supply current which is displaced in phase from that on either of the other two leads to the winding.

Another method which is quite often used with a later type of fractional h. p. single-phase motor is to use two windings displaced 90° from each other, one of which has a condenser connected in series with it. Both windings are left permanently connected to the line and the motor operates similarly to a two-phase motor.

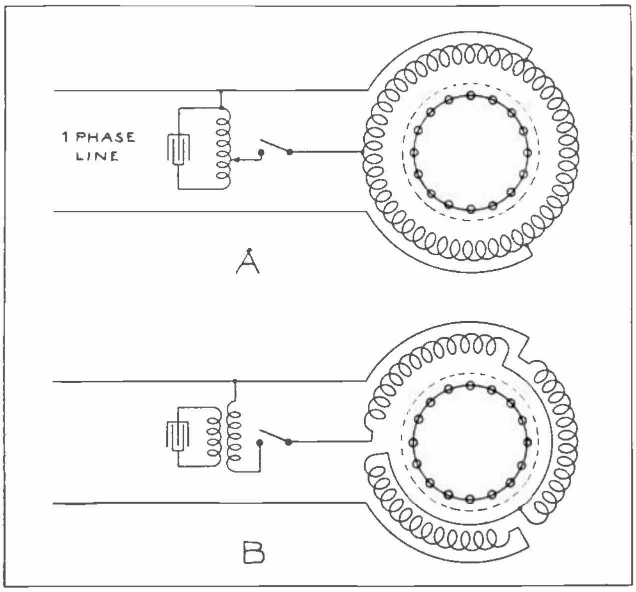

Fig. 166. The above two diagrams show the connections for two different types of single-phase, split-phase motors which use condensers and inductance coils to obtain the split phase currents for their stator windings.

This method entirely eliminates the use of the centrifugal switch. This is a particularly desirable feature, because the operation of motors equipped with centrifugal switches often causes considerable interference with radio receiving sets, as when the motors of such devices as oil burners, refrigerators, and washing machines are started and stopped.

By using the proper size of condenser the lag current effects produced by the motor windings can be neutralized to quite an extent by the leading current produced by the condenser. In this manner it is possible to obtain with single-phase motors much higher power factor than the older types have.

Fig. 167 shows a condenser-type motor for single-phase operation. This motor uses a polyphase winding and has a regular squirrel-cage rotor, both of which can be clearly seen in this disassembled view. The condenser is shown completely enclosed in the metal box on the right.

179. SHADED-POLE MOTORS

Another method of producing torque in a single-phase A. C. motor is by the use of shaded poles similar to those explained under A. C. induction meters in Article 68 of Section Two on Alternating Current.

Fig. 168-A shows a diagram of a 6-pole, single-phase motor of the shaded-pole type, and at B is illustrated the manner in which the shading coil distorts the magnetic flux of the main pole.

The shading coil consists of a small coil of a few turns of wire wound into a slot and around one side of the main pole. This coil is short-circuited, so that it always forms a complete circuit and acts as a secondary winding, receiving induced current from the flux of the main pole winding.

When the main winding is excited with A. C. it sets up a powerful alternating magnetic field which induces current in the rotor bars and also in the short-circuited shading coil. The induced current in the shading coil sets up a flux approximately 90° out of phase with that of the main winding.

The flux set up by the shading coil will therefore oppose the flux of the main pole and cause it to be distorted, as shown at B in Fig. 168.

The reaction between these two magnetic fields which are out of phase with each other causes a

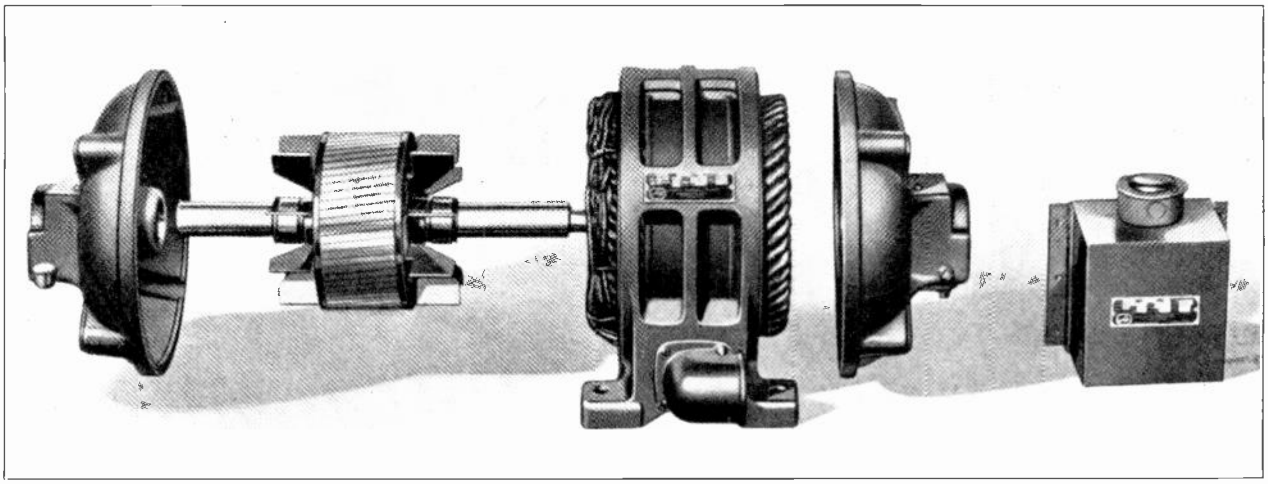

Fig. 167. This photo shows an excellent disassembled view of a squirrel-cage induction motor for single-phase operation and also the condenser by which it obtains the split phase currents for its stator winding.

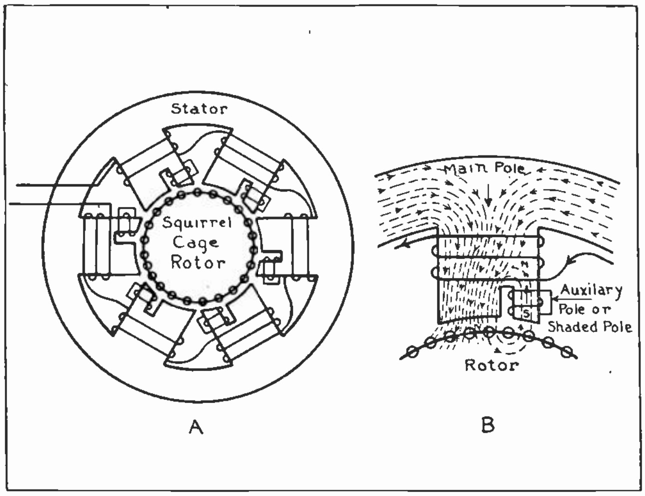

Fig. 168. The above two sketches show the construction and illustrate the principles of the shaded-pole type induction motor.

shifting flux across the face of the main poles, which produces a sort of rotating field effect.

This shifting or rotating field from the shaded stator poles reacts with the flux of the induced current in the rotor and sets up the torque required to operate the motor.

Motors of this type are self-starting and do not require any centrifugal switches or other circuit-breaking devices. They can be reversed by changing ends with the stator or rotor, that is by removing the rotor, changing it end for end and replacing it in the stator.

Shaded-pole motors are used in some electrical fans and for certain other devices requiring fractional horse power motors, but they are not used very often in larger sizes because of their rather low power factor and efficiency.

180. REPULSION MOTORS

Another type of single-phase motor very commonly used is the **repulsion** motor. This motor doesn't operate on the split-phase principle but obtains its torque by repulsion between definite poles induced in the rotor and the poles set up in the stator by the current supplied from the line.

Fig. 169 shows a simple diagram of a single-phase repulsion motor. The stator of this machine has only one winding, which is excited by alternating current from the line and sets up an alternating field or reversing magnetic poles in the stator.

The rotor, which is represented by the symbol for the commutator in Fig. 169, has a wire winding of the wave type similar to that used in D. C. motors. The brushes which rest on the commutator are short-circuited together so they form complete circuits through various sections of the armature winding.

The alternating flux set up by the stator winding induces secondary currents in the rotor or armature winding, and these currents flowing through the paths created by the commutator bars and shorted brushes set up definite alternating poles at certain points on the rotor.

Only two brushes are required with ordinary wave windings but four brushes are quite commonly used on motors of four or six poles. The two small sketches at the right in Fig. 169 show different methods of connecting the brushes for short-circuiting them together. In some cases the brushes are simply grounded to the frames or to a metal ring, as illustrated in the lower small sketch at the right in this figure.

The great majority of repulsion motors are made in the four-pole type, but a few of the two-pole and six-pole type are also made.

181. OPERATING PRINCIPLE

The location of the poles set up by the induced current in the rotor will depend upon the position in which the brushes are set. These brushes are located so that the centers of the induced rotor poles will be built up at a point a few electrical degrees to one side or the other of the center of the stator poles; and so that the polarity of the induced poles in the rotor will be the same as the polarity of the nearby stator pole.

The magnetic repulsion which takes place between these like poles which are only a few degrees apart from each other, will exert a strong turning force on the rotor and thus develop the torque required to operate the motor.

By shifting the brushes a short distance, the induced rotor pole can be set up on the opposite side of the stator pole and thus cause the motor to reverse its direction of rotation.

The speed of repulsion motors can also be varied widely by shifting the brushes so that the rotor poles are induced at a point closer to or farther away from the stator poles.

Repulsion motors produce very good starting torque and have fair efficiency and power factor.

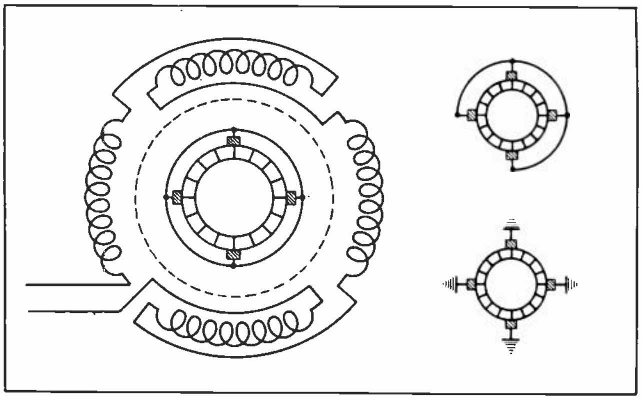

Fig. 169. This diagram shows the connections of the stator winding and brushes of a single-phase A. C. repulsion motor.

182. COMPENSATING WINDINGS

In some cases they are equipped with an auxiliary winding which is connected to an extra set of brushes and is known as a **compensating winding.** Fig. 170 shows the connections for the compensating winding of a motor of this type. The compensating winding is the one shown in lighter lines and is connected to brushes B and B-1. Brushes A and A-1 are the main brushes which short-circuit the proper sections of the rotor winding to produce the regular motor torque.

The purpose of this compensating winding is to improve the power factor and stabilize the speed of the repulsion motor.

Repulsion motors are commonly made in sizes from fractional h. p. to 10 h. p. They, of course, have the disadvantage of requiring a commutator and brushes, which add extra wearing parts to the motor and at times cause a certain amount of sparking if they are not properly cared for.

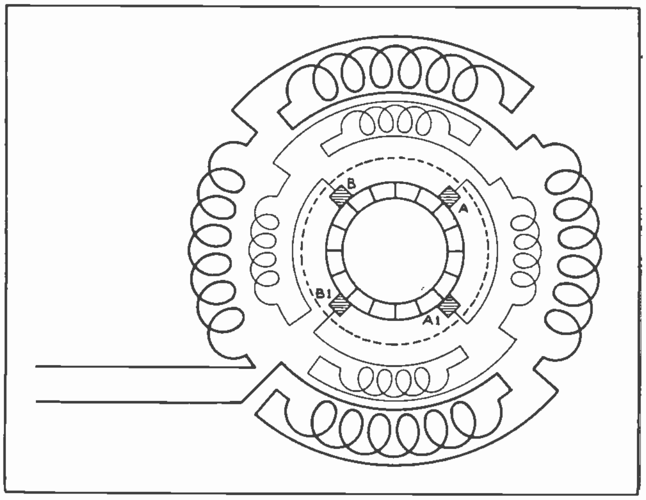

Fig. 170. Diagram of the connections for a repulsion motor with a compensating winding which improves the power factor of this type of machine.

Fig. 171 shows a disassembled view of a single-phase repulsion motor. Note the single-phase winding in the stator core and the typical D. C. armature winding on the rotor. The other parts shown are the end shields, bearing sleeves, rings, brush holders and ring, end-bracket bolts, brushes, and the rails upon which the motor frame is mounted for belt tightening adjustment.

183. REPULSION-INDUCTION MOTORS

Single-phase repulsion-induction motors are simply a combination of the repulsion and induction motor principles. A motor of this type starts as a repulsion motor and runs as an induction motor; thus, the name, **repulsion-induction** motor.

These motors have one winding in the stator and a wire-wound armature equipped with a commutator and brushes as shown in Fig. 172. During starting, the brushes rest on the commutator, thus short-circuiting only certain sections of the rotor winding, setting up like poles near the stator poles, and causing the repulsion torque, the same as the straight repulsion motor.

When the motor reaches nearly full speed a centrifugal device, shown at "A" in Fig. 172, short-circuits all the bars of the commutator together, thus shorting the entire rotor winding and making it act similarly to a squirrel-cage winding.

In some cases the centrifugal device also lifts the starting brushes off the commutator to reduce the wear on the commutator and brushes while the machine is running normally.

After the commutator is shorted, the machine runs as an ordinary single-phase induction motor. In this manner, good starting torque and moderate starting current of the repulsion motor are obtained during starting of the load, and the motor when running operates with the constant speed characteristics of an induction motor.

By equipping these motors with a compensating winding, their power factor can be kept very high when operating at full speeds. Repulsion-induction motors will develop from 2½ to 3 times full load torque during starting and require only from about 2 to 2½ times full load current for starting.

184. SERIES OR UNIVERSAL A. C. MOTORS

If a motor has a wire-wound armature and a commutator of the D. C. type connected in series with its stator winding as shown in Fig. 173, and is then connected to a single-phase A. C. line, the motor will operate very much the same as a series D. C. motor. This is due to the fact that when the armature and stator are connected in series, the alternating current reverses in both of these windings at the same time and causes the magnetic poles set up in the rotor and stator to also reverse at the same time and thereby retain a fixed relation to each other at all times.

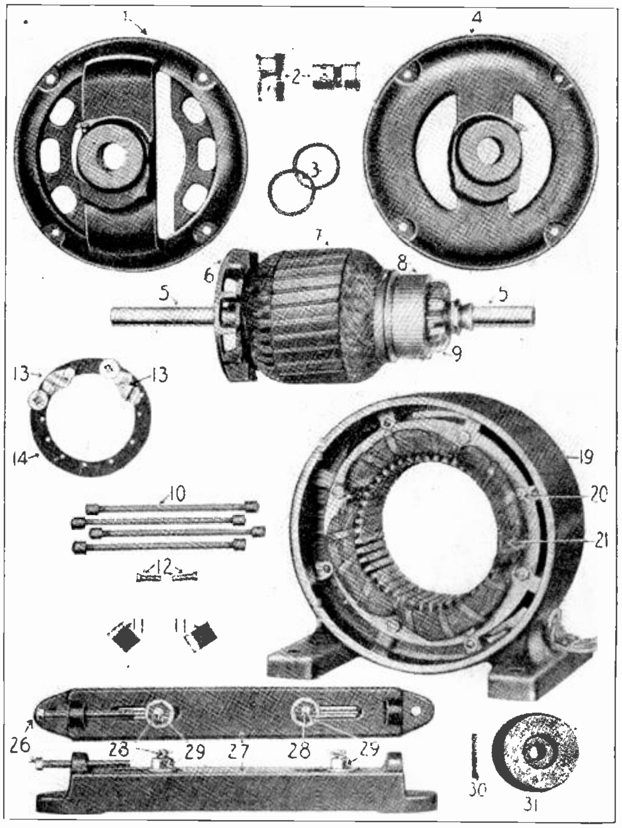

Fig. 171. Disassembled view showing important parts of an A. C. single-phase repulsion motor.

As an illustration: We know that if we reverse both the armature and field leads of a shunt D. C. motor, the machine will continue to operate in the same direction; so we can see that if the polarity of both the armature and field are reversed continually but always at the same time, the motor will continue to develop torque in one direction.

Small ordinary D. C. motors can be operated in this manner on single-phase alternating current, provided the field poles are of laminated construction so they don't overheat due to eddy currents when alternating current is applied.

It is because of the fact that this type of motor can be operated either on direct current or alternating current that it is very commonly called a **universal** motor.

A great many small, fractional horse power, universal motors are made for use with electric fans, household appliances, dentists' tools, and other equipment which may have to be changed from D. C. circuits to A. C. circuits.

The characteristics of series A. C. motors are very similar to those of D. C. series motors. The A. C. series motor will produce excellent starting torque but has very poor speed regulation.

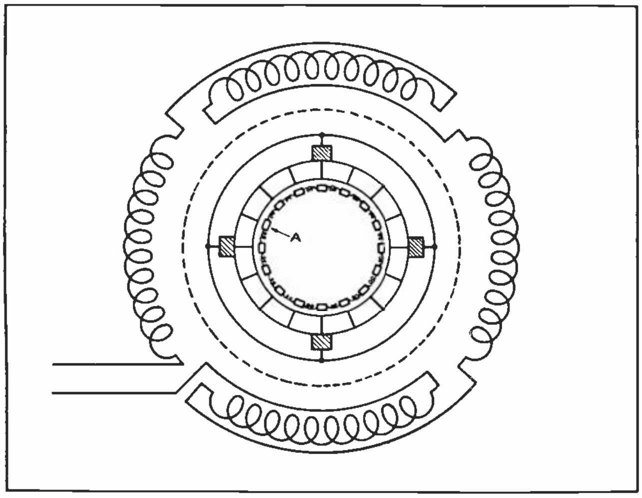

Fig. 172. This diagram shows the connections and arrangement of the short-circuiting device of a repulsion-induction motor. The short-circuiting mechanism at "A" lays around the inside of the commutator bars and short-circuits them all together when the machine comes up to speed.

The speed of these motors can be varied either by connecting a rheostat in series with them or by varying the applied voltage with an auto transformer.

Series A. C. motors of large sizes are quite commonly used in traction service on electrically-operated railway cars and locomotives.

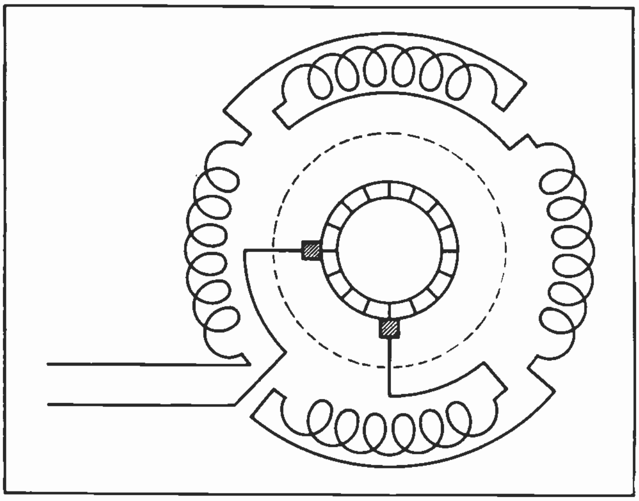

Fig. 173. Stator and armature connections for a series A. C. motor of the universal type which can be operated on either D. C. or A. C.

Besides having the necessary starting torque and speed variation range which are ideal for railway work, these motors possess the added advantage of being able to operate on either D. C. or A. C. trolleys.

For example, the New York, New Haven & Hartford Railroad have been using motors of this type for many years. Their trains are operated on alternating current when outside of New York City, and when within the city they operate from direct current.

185. STARTING SINGLE-PHASE MOTORS

Single-phase motors of fractional h. p. and those up to 2 h. p. are commonly started by connecting them directly across the line. Snap switches are generally used for starting those under ½ h. p., and small knife-switches of the enclosed safety type are used for starting those over ½ h. p.

Single-phase motors of 2 h. p. to 10 h. p. are generally started with a simple starting-box of the resistance or inductance type, to reduce the starting voltage and prevent too heavy surges of starting current.

The use of starting boxes is particularly desirable where the motors are operated from circuits to which lights are connected, as otherwise the heavy starting currents may cause objectionable voltage drop and dimming of the lights.

Where the motors are operated from power circuits, even the largest single-phase motors are sometimes started directly across the line.

POLYPHASE A. C. MOTORS

Polyphase A. C. motors are the most extensively used of any form of power device. They are made in a wide range of sizes from ½ h. p. up to thousands of h. p. each, and are designed to operate at speeds from less than 100 R.P.M. to 3600 R.P.M.

Polyphase motors are self-starting without the aid of auxiliary windings or centrifugal switches. The most commonly used type of polyphase motor has no commutator or brushes, and therefore has very few wearing parts and produces no sparking hazard.

Polyphase motors can be obtained to fit practically any class of drive or power need, and a far greater amount of horse power is produced by polyphase A. C. motors than by all other types of electric motors combined. Fig. 174 shows a modern polyphase induction motor.

There are three general types of polyphase motors, known as: **squirrel-cage induction** motors, **slip ring** or **phase-wound induction** motors, and **synchronous** motors.

Any of these types can be obtained for either two or three-phase operation, but two-phase motors are not very extensively used any more.

186. OPERATING PRINCIPLES

The operating principles of both two and three-phase motors were explained and illustrated in Articles 74 and 75 of Section Two of Armature Winding, and before proceeding farther with this section you should carefully review these articles and Figs. 56 and 57 of Section Two on Armature Winding.

You will recall that the stator winding of a polyphase motor sets up a revolving magnetic field, which induces the secondary currents in the rotor winding or bars and then reacts with the flux of this rotor current and thereby causes a smooth and powerful torque which turns the rotor.

By reviewing Article 74 of Section Two of Armature Winding, you will find that two-phase motors have two windings which are displaced 90 electrical degrees from each other in the stator core.

A simple method of representing the windings of a two-phase motor in electrical diagrams is shown in Fig. 175. The two small sketches in Fig. 175-B show the two-phase "mesh" or delta connection above, and the two-phase star connection below.

When two-phase motors are equipped with wound rotors, regular three-phase wound rotors are generally used. This eliminates the need for four collector rings, and the three-phase rotor winding works equally well on the induced current which it receives from the rotating magnetic field of the stator.

When the stator windings shown in Fig. 175-A are supplied with two-phase current, a rotating field is set up, as explained in Article 74, Section Two of Armature Winding. This rotating magnetic field will induce secondary currents in the squirrel-cage, or in a wound rotor, whichever is used; and the reaction between the flux of the rotor currents and that of the stator field produces the motor torque.

The same squirrel-cage rotor can be used in either a two-phase or three-phase motor, provided they both have the same diameter of stator core opening.

Two-phase motors can be reversed by reversing the leads of either phase.

187. THREE-PHASE MOTORS

As three-phase energy is so convenient and economical for power transmission purposes and as it is also ideal for producing a uniform revolving field in polyphase motors, three-phase motors are by far the most commonly used of any type of electric motor.

In Section Two on Armature Winding we learned that the stators of three-phase motors have a uniform and continuous winding, to which the line leads are connected 120 electrical degrees apart.

Review carefully the manner in which these windings are arranged and connected for obtaining different numbers of poles, and also the manner in which they set up the revolving magnetic field when the stator is supplied with three-phase energy.

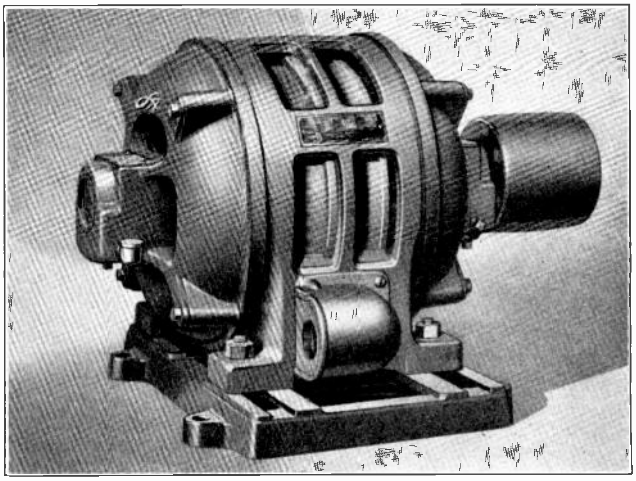

Fig. 174. This photo shows a modern polyphase induction motor. The three phase leads from the line are connected to the stator leads in the connector box shown on the side of the frame.

It is easy to see that this revolving field will cut across the bars of a squirrel-cage rotor, or across the conductors of a phase-wound rotor, and induce in them the secondary currents which, by the reaction of their flux with the flux of the stator, produce the motor torque.

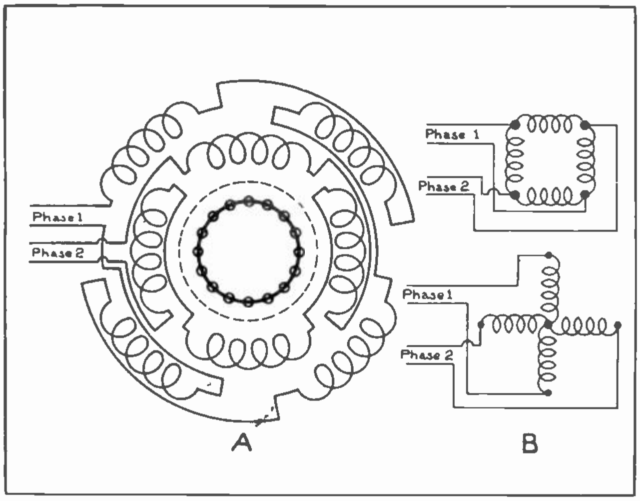

Fig. 175. A. This diagram shows the connections of the stator windings of a two-phase induction motor. At B are shown two schematic diagrams illustrating different methods of connecting two phase windings.

Fig. 176 shows two excellent cut-away views of a modern three-phase squirrel-cage induction motor. This figure shows clearly the important constructional features and the location of all the parts in the assembled motor. Note carefully all details of the construction of the rotor, stator, windings, frame, bearings, ventilating openings, etc.

The windings of a three-phase motor can be represented in simple schematic diagrams as shown in Fig. 177-A or B, according to whether they are connected delta or star.

As three-phase motors are so extensively used, the following discussion of characteristics of the various types of motors will refer principally to three-phase machines. Many of the same characteristics are, however, also found in two-phase motors.

188. SQUIRREL-CAGE MOTOR CHARACTERISTICS

Squirrel-cage motors are commonly referred to as constant speed motors; but their speed is not quite constant, as they do not operate at synchronous speed and their "slip" varies with the amount of load applied to them.

When a squirrel-cage motor is not loaded, its speed will be very near to that of the revolving magnetic field, or synchronous speed. As load is applied to the motor, its speed is gradually reduced until at full load the slip is usually from 3 to 5 per cent. on large motors, and may be as much as 8 or 10 per cent. on small single-phase machines.

The running torque of a squirrel-cage motor of any given size is the same as that of a slip-ring or synchronous motor of the same size; because the running torque, you will recall, depends entirely

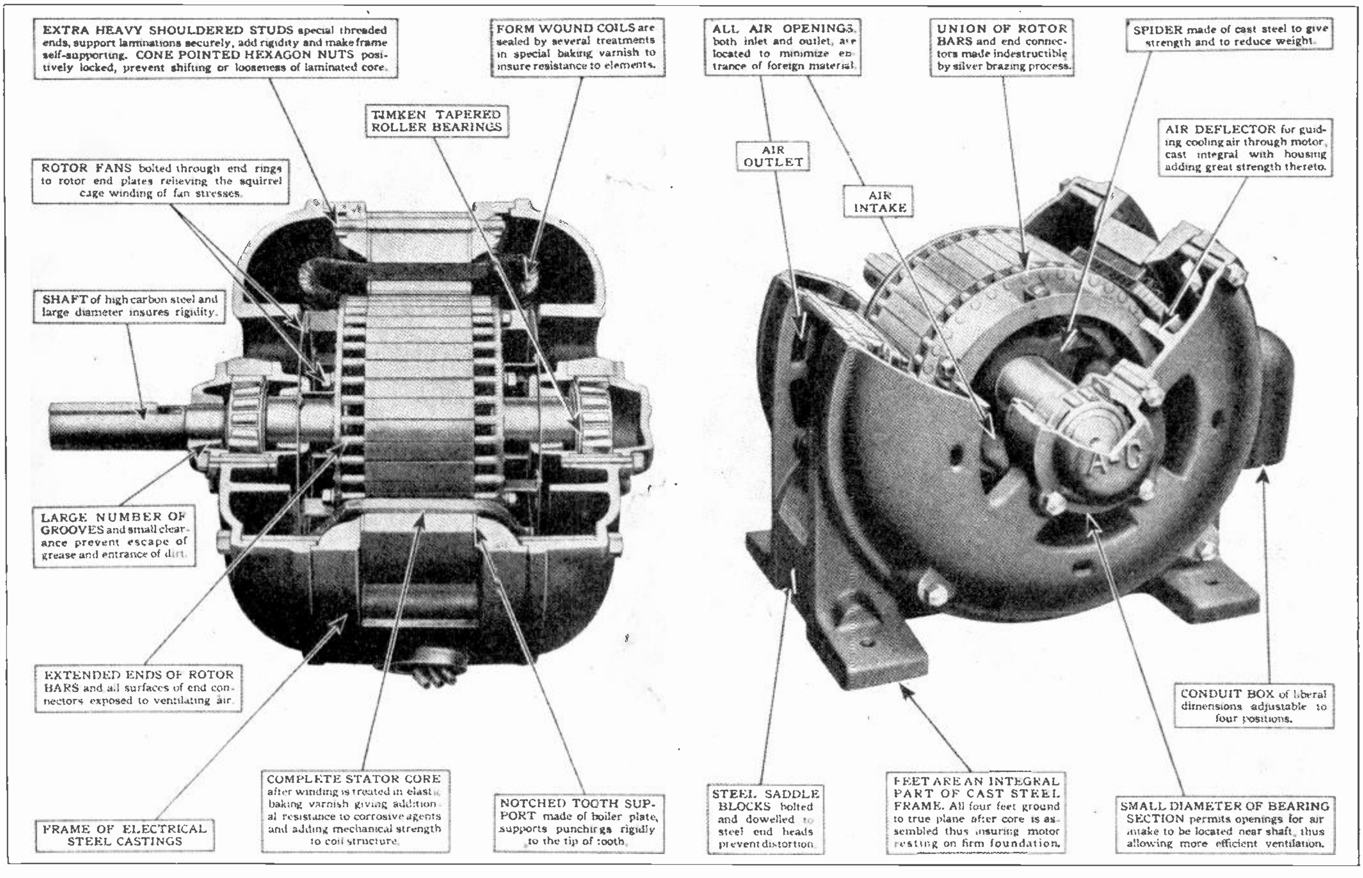

EXTRA HEAVY SHOULDERED STUDS special threaded ends, support laminations securely, add rigidity and make frame self-supporting. **CONE POINTED HEXAGON NUTS** positively locked, prevent shifting or looseness of laminated core.

FORM WOUND COILS are sealed by several treatments in special baking varnish to insure resistance to elements.

ALL AIR OPENINGS both inlet and outlet, are located to minimize entrance of foreign material.

UNION OF ROTOR BARS and end connectors made indestructible by silver brazing process.

SPIDER made of cast steel to give strength and to reduce weight.

TIMKEN TAPERED ROLLER BEARINGS

ROTOR FANS bolted through end rings to rotor end plates relieving the squirrel cage winding of fan stresses.

AIR OUTLET

AIR INTAKE

AIR DEFLECTOR for guiding cooling air through motor, cast integral with housing adding great strength thereto.

SHAFT of high carbon steel and large diameter insures rigidity.

LARGE NUMBER OF GROOVES and small clearance prevent escape of grease and entrance of dirt.

EXTENDED ENDS OF ROTOR BARS and all surfaces of end connectors exposed to ventilating air.

CONDUIT BOX of liberal dimensions adjustable to four positions.

FRAME OF ELECTRICAL STEEL CASTINGS

COMPLETE STATOR CORE after winding is treated in elastic baking varnish giving additional resistance to corrosive agents and adding mechanical strength to coil structure.

NOTCHED TOOTH SUPPORT made of boiler plate, supports punchings rigidly to the tip of tooth.

STEEL SADDLE BLOCKS bolted and dowelled to steel end heads prevent distortion.

FEET ARE AN INTEGRAL PART OF CAST STEEL FRAME. All four feet ground to true plane after core is assembled thus insuring motor resting on firm foundation.

SMALL DIAMETER OF BEARING SECTION permits openings for air intake to be located near shaft, thus allowing more efficient ventilation.

Fig. 176. The above photo shows two cut-away views of a polyphase squirrel-cage induction motor. The important parts of the motor are clearly shown in these two views and you should carefully note the descriptions given for each part. A careful study of this figure will show a number of very important features of induction motor construction. (Photo courtesy Allis-Chalmers Mfg. Co.)

upon the speed and horse power rating for which the motor is designed.

The load pull-out torque of the squirrel-cage motor should not be less than 150% of the running torque, and with certain types of motors it will be as high as 250% of the running torque.

Having a pull-out torque considerably greater than the running torque enables the motor to carry momentary overloads without stalling.

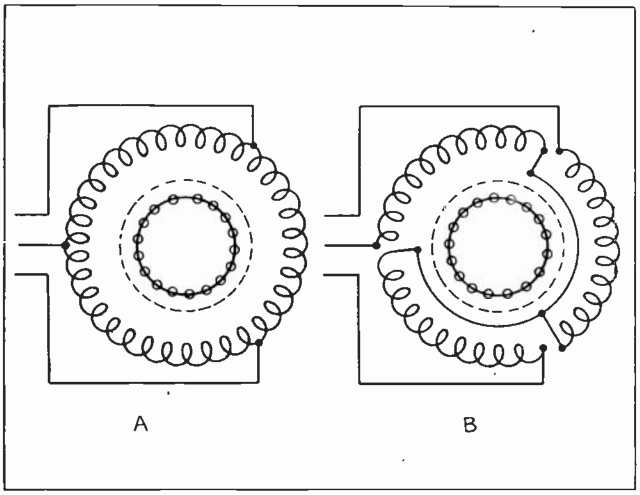

Fig. 177. A shows a delta-connected stator winding for an induction motor. The sketch at B shows a star-connected winding.

189. STARTING TORQUE

The starting torque of squirrel-cage motors depends upon the design of the rotor and upon the value of the voltage applied to the stator winding during the starting period.

A very important rule to keep always in mind when working with induction motors is as follows: **the starting torque of an induction motor varies with the square of the applied voltage.**

Good starting torque can be obtained with squirrel-cage motors by starting them on the full line-voltage or the rated voltage of the machine. When started in this manner, the current taken by the motor will be several times the normal full load current; and if heavy loads are being started, the starting current may range from 4 to 9 times full load current.

If the load should require considerable time to come up to speed, the heavy starting current required during this time may overheat and possibly damage the stator windings. For this reason the type of load to be started must be taken into consideration when determining the starting voltage to be applied to the motor.

The very heavy surge of starting current which results when squirrel-cage motors are started at full line-voltage is often very objectionable, as it causes voltage drop in the line and this voltage drop may interfere with the operation of other power equipment or cause considerable variation in the brilliancy of lights that may be attached to the same circuit.

In some cases the supply lines may not be large enough to permit the starting of induction motors on full line-voltage. In many cases power companies object to or do not permit this method of starting motors which are connected to their lines. So, for these reasons, most squirrel-cage motors of 1 to 5 horse power and larger are started at reduced voltage by the use of some form of motor-starting devices.

A. C. motor starters are explained in a later section. Their principal function, however, is to reduce the voltage to the motor by means of resistance or inductance in the circuit of the stator winding during the starting period. When the starting voltage is reduced, the heavy surge of starting current will also be greatly reduced and, of course, the starting torque developed by the motor will also be considerably lower.

The convenient table in Fig. 178 shows the effect which reduced starting voltage has on the starting current and starting torque of common induction motors. The various starting voltages shown in the table range from 33% to 100% of the rated motor voltage, and the starting current and starting torque for each different voltage are given in percentage of full-load current and running torque of the machine.

Some induction motors are designed with special squirrel-cage rotors to improve the starting torque. These machines will be explained in later paragraphs.

Fig. 178-A gives a set of curves which show the starting torque and starting current of a typical squirrel-cage motor. Curve A shows the starting torque on full line voltage, and curve A-1 shows the starting current for the same condition. Curves B and B-1 show the starting torque and current of a squirrel-cage motor with a high resistance rotor. Note how the added resistance increases the torque and decreases the current.

Curves C and C-1 show the starting torque and current when a starting compensator is used with an ordinary squirrel-cage motor. Note how the torque at reduced stator voltage is lower than with

Starting voltage in percent of rated motor voltage	Starting current in per cent of full load current	Starting torque in per cent of running torque
33%	75 %	22 %
40 "	110 "	33.3 "
50 "	175 "	50 "
60 "	250 "	70 "
66 "	300 "	88 "
80 "	450 "	130 "
100 "	700 "	200 "

Fig. 178. The above table shows the effect of reduced starting voltage on both the starting current and starting torque of induction motors.

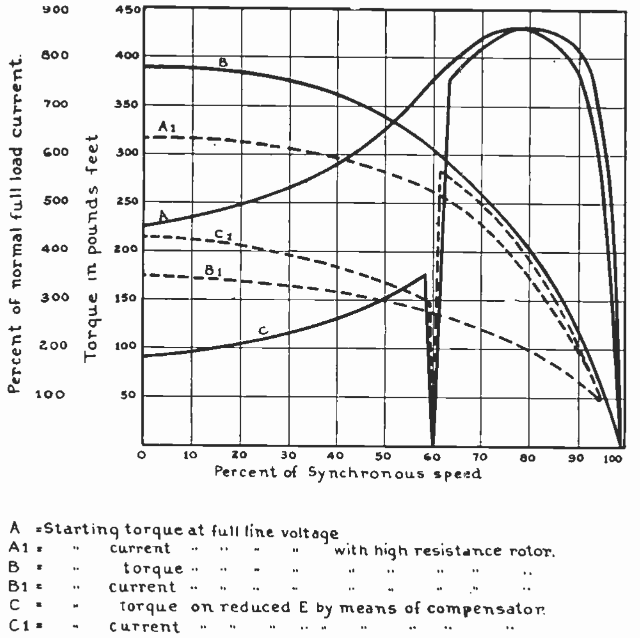

Fig. 178-A. The above diagram shows voltage, current, and torque curves of an ordinary squirrel-cage motor. A careful study of these curves will help you gain an understanding of these very important characteristics of squirrel-cage motors.

either of the other methods of starting, and also the interruption and sudden increase of torque when the compensator switches over to full voltage.

190. POWER FACTOR AND EFFICIENCY

The power factor of three-phase, squirrel-cage motors operated at full load may vary from 60 to 70 per cent. in the case of small low speed motors, to 75 to 90 per cent. for medium-sized motors; and as high as 90 to 96 per cent. for large motors of several hundred horse power and up.

Power factor is a very important characteristic to be considered when selecting large induction motors or a large number of small ones; because, as explained in an earlier section, a great deal of money can be saved on power bills by keeping the power factor of the system as high as possible.

It is also very important to remember that any induction motor operates at a much lower power factor when it is lightly loaded, and for this reason motors should be properly chosen so that during normal operation they will be running at or near full load a greater part of the time.

The efficiency of squirrel-cage motors varies similarly to the power factor. Small low-speed motors may have efficiencies ranging from 50 to 80 per cent., while the larger machines will operate at efficiencies from 90 to 95 per cent.

The efficiencies are usually best when the motors are operating above 75% of their full rated load. High-speed motors of the two and four-pole type generally have the highest efficiency and power factor.

Fig. 178-B shows the power factor and efficiency curves for a 100 h. p. squirrel-cage motor. Note that the P.F. and efficiency are both very low at light loads, under 20 h. p., and then rapidly rise to high values on loads between 60 and 100 h. p., but fall off again when the motor becomes overloaded. This figure also shows the current and speed curves of the motor at various loads.

191. FACTORS CONTROLLING SPEED OF INDUCTION MOTORS

As explained in the earlier part of this section, the speed of induction motors depends upon the number of poles in the stator winding and upon the frequency of the alternating current on which they are operated.

As induction motors are designed to operate on practically constant frequency, their speed cannot be varied to any appreciable extent by varying the frequency.

The speed of squirrel-cage induction motors can be changed by changing the number of poles in the stator winding, as explained in Section Two of Armature Winding. If the speed change is to be permanent, the stator can be reconnected for a different number of poles; while, if it is desired to frequently make a certain change in the speed during operation of the motor, the stator winding can have the pole leads brought out separately to terminals of a switching device by means of which the number of poles can be quickly changed by regrouping them. The switching device and connections for this method of varying the speed of squirrel-cage motors will be explained in a later section on A. C. Motor Controls.

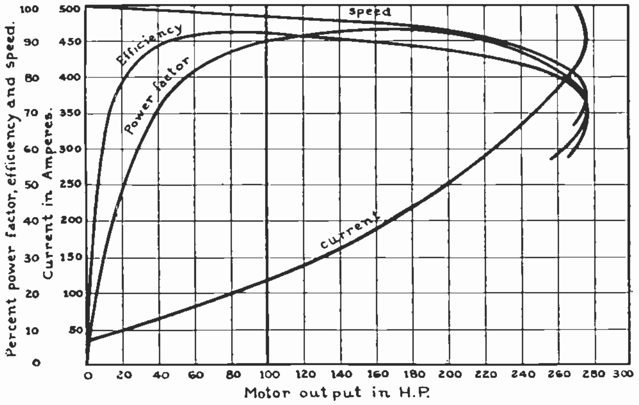

Fig. 178-B. This diagram shows the efficiency, power factor, speed, and current curves for a 100-h. p., squirrel-cage motor. Note carefully how the efficiency and power factor vary with different amounts of load up to full rated load, and also on various overloads.

The direction of rotation of a three-phase induction motor can be reversed by reversing any two of the three phase leads to the motor.

192. GENERAL APPLICATION

Because of their very rugged construction and small number of wearing parts, squirrel-cage induction motors find a very wide field of application. They require very little maintenance and repair, if they are operated under the proper conditions.

Having no commutator brushes or other sliding contacts they do not produce any sparking and can therefore be used in many locations where other types of motors cannot be used because of the danger of explosions. This applies to buildings or locations where explosive gases or dust may be in the air.

When selecting and installing motors it is well to keep in mind that sawdust, coal dust, starch, flour, grain dust of any kind, sugar, etc., are very explosive when mixed with air in just the right proportions. This is also true of paint and varnish fumes, oil vapors, and vapors from certain chemicals.

To eliminate fire and explosion hazard, squirrel-cage motors are invariably used in modern plants manufacturing or handling materials such as those just mentioned. Fig. 179 shows a number of squirrel-cage motors of various sizes, and Fig. 180 shows a 100-h. p. squirrel-cage motor installed in a cotton gin.

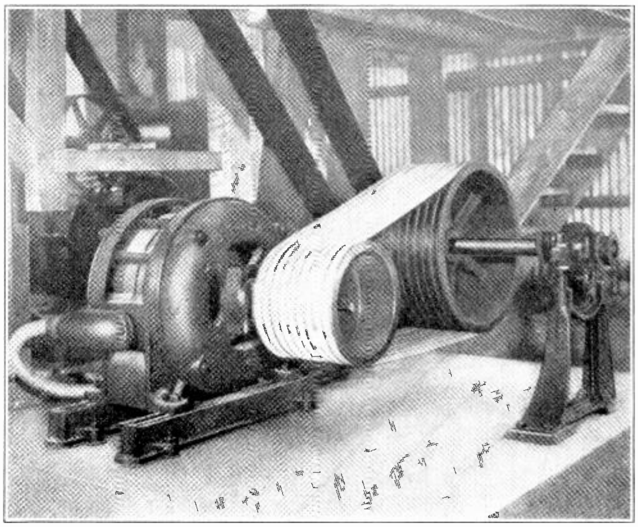

Fig. 180. This photo shows a 100-h. p. squirrel-cage motor driving machinery in a cotton mill. The motor operates the large pulley on the line shaft by means of the "texrope" drive, and belts convey the power from this shaft to the driving machinery. (Photo courtesy Allis-Chalmers Mfg. Co.)

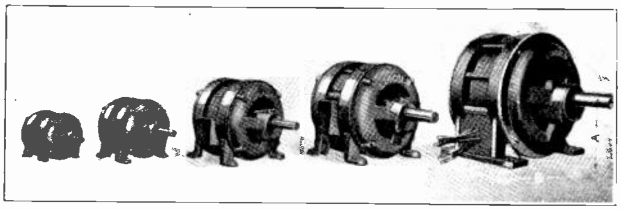

Fig. 179. This photo shows a group of polyphase induction motors of various sizes. Motors of this type are available in practically any size required.

Some of the uses to which squirrel-cage induction motors are commonly put are as follows:

- Machine drives in industrial plants
- Machine drives in wood-working plants
- Operating machines in general manufacturing plants
- Textile mill drives
- Saw mills
- Paper mills
- Steel mills
- Grain elevators
- Flour mills
- Mining machinery
- Electric ship propulsion
- Passenger and freight elevators
- Motor-generator sets
- Small hoists
- Pumps and fans

193. SLIP-RING MOTORS

From the foregoing material on squirrel-cage motors, it is evident that they are not well adapted to variable speed service. Where variable speed duty is required, slip-ring induction motors are commonly used.

These slip-ring or phase-wound motors have stators and stator windings of exactly the same type as those used in squirrel-cage motors, but their rotor windings are made of insulated copper wire or bars somewhat similar to those used on direct current machines.

Generally these motors are wave-wound and star-connected, although in some cases they are lap-wound and delta-connected. The star-connected wave-winding is somewhat easier to install and produces better mechanical strength and balance of the rotor.

Three leads are connected to the rotor winding at points 120° apart and are brought out along the shaft and connected to three slip rings.

Fig. 181 shows a wound rotor of a slip-ring motor and the slip rings can be clearly seen mounted on the shaft. These rings are usually made of brass and are well insulated from each other and from the shaft. This rotor in Fig. 181 has a winding of insulated copper wire.

Fig. 181-A shows another phase-wound rotor which has a winding of insulated copper bars, which are properly connected to the slip rings on the shaft.

During operation of slip-ring motors the brushes slide on the rings and provide a connection for the

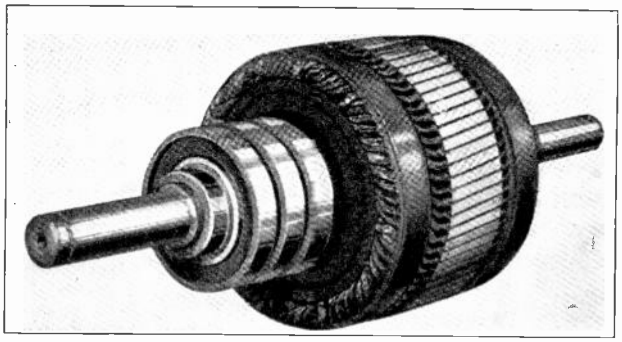

Fig. 181. Wound rotor of a variable speed slip-ring motor. This rotor has windings of insulated copper wire similar to those in D. C. armatures.

induced currents to flow from the rotor winding to a control resistance in the external circuit. By varying this resistance the secondary current flow in the rotor can be varied; and this will increase or decrease the amount of torque and slip, and thus vary the speed of the motor.

Controllers of the face-plate type or drum type are commonly used with variable speed, slip-ring motors.

Fig. 182 shows a 440-volt induction motor of the slip-ring type. Note the brushes resting on the three slip rings and also note the three leads which are brought out from these brushes for connection to the controller by which the speed of the motor is varied.

The connections of the stator winding are made at the hooded outlet shown on the side of the motor frame. The slots shown between the sections of the laminated stator core of this motor are provided for the circulation of cooling air.

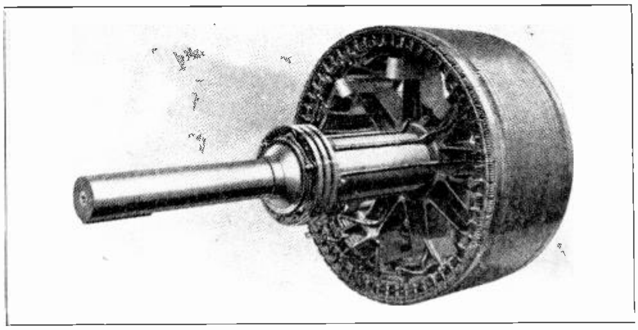

Fig. 181-A. Phase wound rotor of a large slip-ring induction motor. This rotor has heavy bar windings which are not shorted together like those of a squirrel-cage rotor, but instead have connections brought out from each phase to the slip rings.

194. STARTING AND SPEED CONTROL WITH EXTERNAL RESISTANCE

Fig. 183 shows a schematic diagram of the connections for the stator, rotor, and starting or speed-control resistance of a slip-ring motor. The resistance is shown connected star, the same as the rotor windings, and if you trace the circuit from each section of the rotor winding you will find that the complete resistance of two sections of the controller is in series with it.

The three sliding-contact arms which are indicated by the arrows are connected together at the central point and are arranged to cut out this resistance as they are rotated in a clockwise direction.

This resistance is used for starting slip-ring motors as well as for controlling their speed, and if the amount of resistance is properly proportioned these motors have a very good starting torque with moderate starting currents.

Before starting the motor by closing the line switch, the controller should be set so that the maximum amount of resistance is in the rotor circuit. Then this resistance is gradually cut out as the motor comes up to speed.

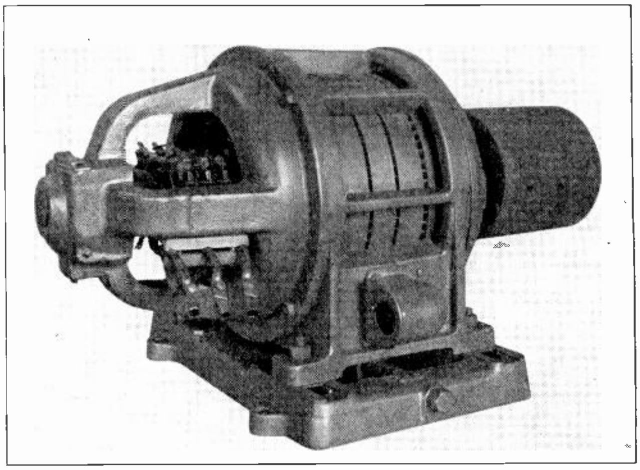

Fig. 182. This photo shows a complete slip-ring motor to which variable resistance can be connected for starting and speed-regulating duty. Note the slip rings and rotor connections on the left-hand end of the machine. (Photo courtesy General Electric Co.)

In many cases slip-ring motors with resistance starters are used just because of their good starting torque and lower starting currents, even though they may not be required to give variable speed service.

If the resistance is only used for starting duty it can be much smaller and lighter than when used for speed-regulating duty. When used for regulating the speed of the motor the rheostat must have resistance elements large enough to carry the full load current continuously without overheating.

After the motor is up to speed, if resistance is again cut into the rotor circuit, the speed will be decreased in proportion to the amount of resistance inserted.

Fig. 184 shows a diagram of a heavy-duty slip-ring motor with the starting and speed regulating resistance arranged so it can be cut in or out of the rotor circuit by means of short-circuiting switches.

The motor is started with all of the resistance switches open and the full resistance in the rotor circuit. When switch No. 1 is closed it shorts out the first section of resistance; switch 2 shorts the second section, and switch 3 shorts out the last of

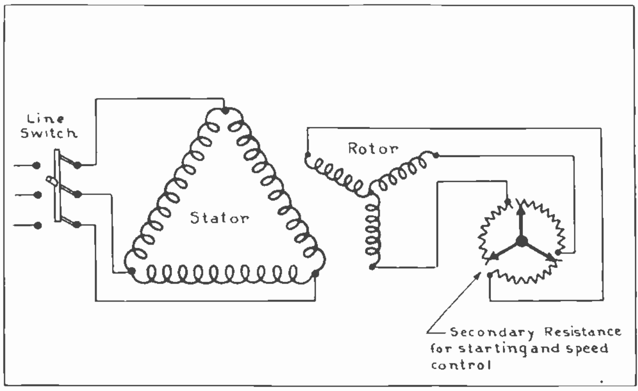

Fig. 183. The above diagram shows the connections of the stator and rotor of a slip-ring induction motor, and also the variable resistance used in the rotor circuit for starting and speed control.

the resistance, bringing the motor up to full speed.

For starting and controlling the speed of large motors of this type magnetically operated contactors or breakers are used in place of the knife switches shown in Fig. 184.

The value of the induced voltage in the secondary or rotor winding of a slip-ring motor may vary between 25 and 60 per cent. of the stator voltage, according to the design of the motor.

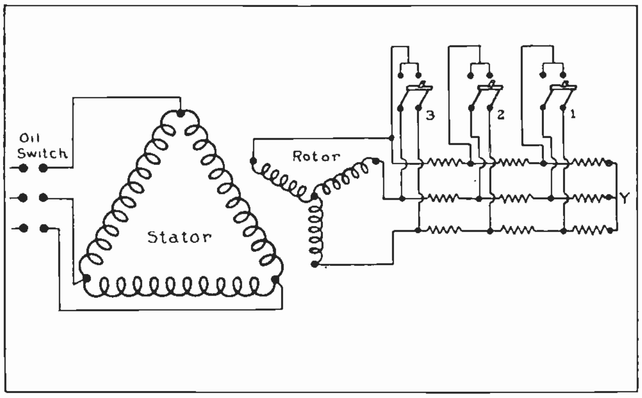

Fig. 184. Connection diagram of slip-ring induction motor with knife switches used to cut out the starting or speed control resistance step by step.

195. INTERNAL RESISTANCE MOTORS

On small motors with phase-wound rotors the secondary resistance is often mounted in the rotor spider so that it revolves with the rotor winding and can be connected directly to it, thus eliminating the necessity for collector rings and brushes.

In such motors the resistance may be cut out or short-circuited by a centrifugal switch as the motor comes up to speed. In other cases motors of this type are equipped with a hollow shaft, through which a rod is run and connected to the machanism which operates the contacts to cut the rotor resistance in or out of the circuit.

This rod is provided with a knob on the outer end and can be pushed back and forth by hand while the motor is operating. Motors of this type with the internal secondary resistance should not be used on loads which require too great a length of time to come up to speed, or the resistance units may be damaged by overheating.

Motors with internal rotor resistance are usually not made in sizes over 200 h. p. Motors larger than this are practically always equipped with slip rings and external resistance and many of the smaller slip-ring motors also have external resistance.

196. CHARACTERISTICS OF SLIP-RING MOTORS

Slip-ring motors can be designed to give a starting torque of 250% or more of the running torque. A starting torque of 125% may be obtained with a stator current of 150% of full load current rating; and a starting torque of 200% can be obtained with 250% of full load current, etc.

This ability to produce good starting torque with moderate starting currents makes the slip-ring motor very desirable where loads must be frequently started and stopped, and where it is necessary to avoid heavy starting current surges of 4 to 6 times the running current value.

Figs. 185-A and B give a set of curves which show the starting torque and starting current of a slip-ring motor during the various steps of starting, and as the resistance is cut out of the rotor circuit step by step.

These curves may appear a bit complicated at first glance, but study them carefully for a few minutes and you will find them very simple to understand. You will also find that they give a lot of valuable information on the characteristics and performance of slip-ring motors.

197. EFFECT OF SECONDARY RESISTANCE ON STARTING TORQUE

The upper set of curves at A show the starting torque developed by the motor at various percentages of its synchronous speed, and with different amounts of resistance in the rotor circuit.

The heavy irregular line which jumps from curve T-1 to T-2, T-3, and T-4 shows the variations and amount of starting torque as the resistance is cut out and as the motor picks up speed during starting.

To read the value of the torque at any point on any curve, just follow the horizontal chart lines to the left edge of the figure, where the torque can be read approximately, in per cent. of full load torque of the motor. By following the vertical lines downward from any point on a curve, the per cent. of synchronous speed at that point can be found.

For example: The motor is started with full resistance in the rotor circuit, and curve T-1 shows the starting torque commencing at about 185% of full load torque and dropping off to about 160% as the motor reaches 35% speed. Here the first section of resistance is cut out, and the torque is increased to about 295%. Again it gradually reduces as shown by curve T-2, to about 220% when the motor has reached 70% speed.

Cutting out another section of resistance brings the torque back up to about 325% from where it decreases as shown by curve T-3 to about 125% when the motor reaches 92% speed.

Then cutting out the last step of resistance raises the torque once more to slightly over 200%, from which point it drops as shown by curve T-4 to 100% or full load torque as the motor reaches its actual running speed of about 97% synchronous speed.

By cutting out the resistance in this manner, the starting torque is kept high during the entire starting period.

The dotted line at the left end of the heavy line in curve T-2 shows the value of the starting torque

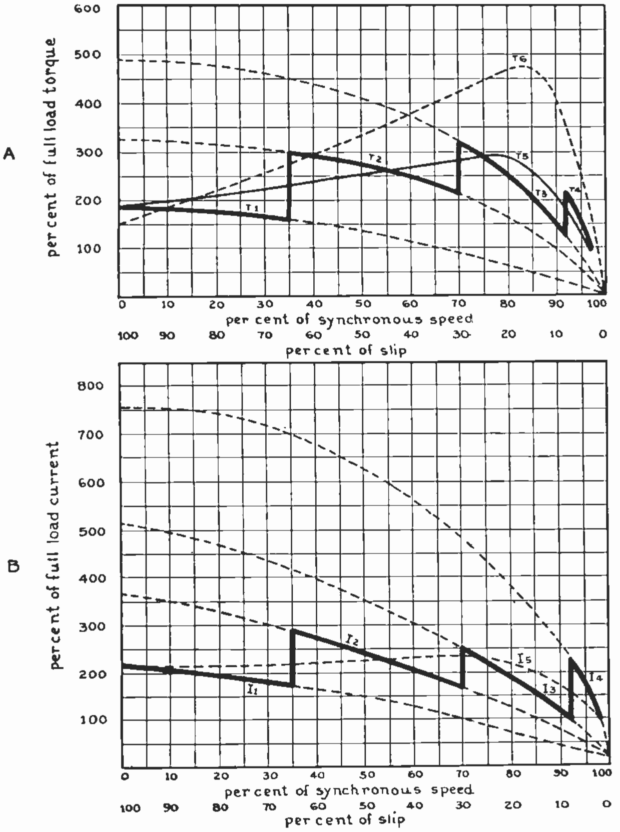

Fig. 185. A shows the torque curves of a slip-ring induction motor as the resistance is cut out of the rotor circuit and the motor comes up to speed. B shows the current curves of the same motor and corresponding to the various steps of the torque curves. Study these curves very carefully with the accompanying explanation.

that would be obtained if the motor were started with one section of resistance already out of the rotor circuit. The dotted line forming the left end of curve T-3 shows the starting torque when starting the motor with two sections of resistance cut out.

The dotted lines forming the right-hand ends of the curves T-1, T-2, and T-3 show hcw the torque will continue to fall off very rapidly, if the resistance is not cut out as the motor picks up speed.

The light continuous curve T-5 shows the gradual variation in starting torque which would be obtained if the resistance was cut out very smoothly and gradually, instead of in sections or steps.

The continuous dotted curve T-6 shows the starting torque obtained by starting the motor without any resistance and allowing it to come up to full speed in this manner. This curve shows the very important fact that the torque obtained by starting without any starting resistance in the rotor circuit is at first actually lower than when starting with resistance in the circuit.

This corresponds with what has previously been mentioned, that the starting torque of induction motors can be increased by using the proper amount of resistance in the rotor circuit.

Note also from curve T-6 how the starting torque or constant voltage keeps increasing as the motor speed increases, becoming maximum at about 83% of synchronous speed, and then falling off as the motor approaches closer to synchronous speed.

This is due to the fact that when an induction motor is first started, the difference between the rotor speed and the speed of the revolving magnetic field is very high, and therefore the frequency of the induced rotor currents is high. At this high frequency the rotor currents lag considerably behind the induced voltage, and the torque or power produced is very low.

As the rotor speed increases, the difference between its speed and that of the revolving magnetic field of the stator is less, the frequency of the induced rotor currents is lower, and the power factor is higher; which results in increased torque.

Of course, when the rotor reaches nearly synchronous speed, the lines of force of the rotating magnetic field do not cut across the rotor conductors as rapidly, and the induced voltage and current in the rotor begin to decrease. This causes the torque to reduce somewhat as the motor approaches its rated speed and settles down to operate at its normal percentage of slip, which is always required to produce full load torque.

The percentage of slip is also marked from right to left along the lower side of Figs. 185-A and B. This slip, of course, decreases as the percentage of synchronous speed of the rotor increases.

198. STARTING CURRENT OF SLIP-RING MOTORS

In Fig. 185-B, or the lower set of curves, is shown the current during the various steps of starting a slip-ring motor. You will note that when the motor is started with full resistance in the rotor circuit the starting current as shown by curve I-1 is at first about 215% of normal full load running current. This current reduces gradually as the rotor increases its speed and reduces the slip.

When the motor reaches 35% speed and the first section of resistance is cut out, the current is increased to about 285%, as shown by curve I-2, and so on throughout the following steps of starting the motor.

After the last section of resistance is cut out at about 92% speed, the current decreases as shown by curve I-4, until at about 97% synchronous speed or actual operating speed of the motor, the current has reached 100% or normal full load current.

Note the very heavy starting currents which will be drawn by the motor if it is started without any resistance or with only one or two sections of resistance in the rotor circuit. This is shown by the dotted lines forming the left ends of curves I-4, I-3 and I-2. If this particular motor were started without any resistance the starting current at first would be about 750% or 7½ times full load current, and it would then gradually decrease as the motor speed increases and the slip decreases.

Also note from curve I-5 the more uniform starting current which would be obtained by cutting out the resistance gradually instead of in steps.

The current shown by curve I-5 corresponds to the starting torque shown by curve T-5 in Fig. 185-A.

Each of the other current curves corresponds to the torque curve of the same number in the upper figure.

The efficiency and power factor of slip-ring motors are generally a little lower than those of squirrel-cage motors, but this small loss is frequently more than offset by the other advantages of the slip-ring motors.

When slip-ring motors are used for variable speed service and are being operated below normal speeds their power factor and efficiency will be correspondingly lower than when running at their full rated speed.

The horse power output of motors of this type varies in proportion to the speed at which they are operated. Slip-ring motors generally have approximately the same percentage of slip, or in some cases a little more than that of squirrel-cage motors.

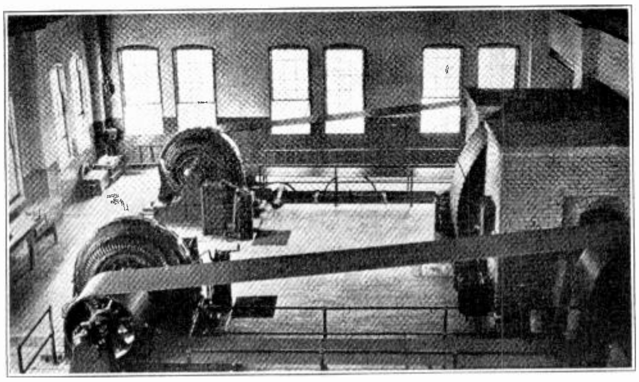

Fig. 186. This photo shows two large slip-ring motors driving a ventilating fan in a mine. The motors are connected to the fan by means of special multiple rope drives.

199. APPLICATIONS OF SLIP-RING MOTORS

Because of their very good starting torque with moderate starting currents and due to the fact that they can be used for variable speed duty, slip-ring induction motors have a large number of applications and types of service to which they are ideally suited.

They are extensively used for driving machines which require frequent starting and stopping, and which are hard to start because of the nature of the load. They are also used for operating devices which require speed variation over a greater range than can be obtained by changing the number of poles of squirrel-cage motors.

Some of the common uses for slip-ring motors are as follows:

Pump and compressor drives
Variable speed fans and blowers
Hoists and cranes
Rotary dryers and kilns
Grinders and crushers
Electric railways
Electric ship drives.

Fig. 186 shows two 450-h. p. slip-ring induction motors driving a large mine ventilating fan, and Fig. 187 shows a 300-h. p. slip-ring motor which is used to operate a large hoist.

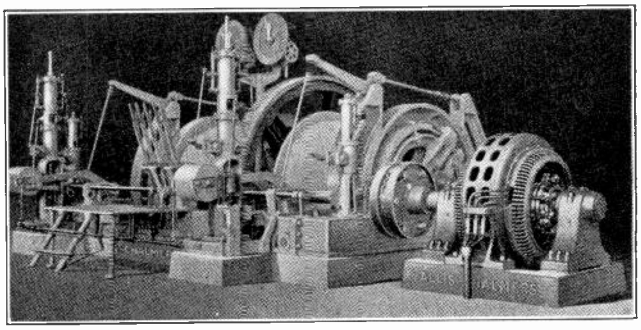

Fig. 187. Large slip-ring motor used to drive the drums of a hoisting machine. Note the manner in which the stator leads are brought up to the motor in conduit which is imbedded in the floor. (Photo courtesy Allis-Chalmers Mfg. Co.)

200. SYNCHRONOUS MOTORS

Synchronous motors operate at synchronous speed, or in exact step, with the applied frequency and the rotating magnetic field of the machine.

When in normal operation, the synchronous motor has no slip, or "zero slip" as it is often called. The speed of these motors is inversely proportional to the number of poles in the stator and directly proportional to the frequency of the applied line voltage, and as long as the number of poles and frequency remain unchanged the speed will not vary.

Therefore, a synchronous motor is actually a constant-speed motor and can be used where a certain speed must be accurately maintained at all times.

Another great advantage of synchronous motors is that their power factor is very high, and they can actually be operated at leading power factor in order to improve the power factor on a system which is loaded with inductive equipment.

In many cases synchronous motors are used for power factor correction alone, and are operated without any mechanical load attached. In such cases the motors are connected to the system or lines and allowed to run idle or float on the lines, with their D. C. field poles strongly excited; so that they actually generate and feed leading current into the line and thus help to neutralize the effects of the lagging current produced by induction motors or other inductive equipment on the line.

When these machines are used for power factor correction in this manner they are called **synchronous condensers**; because their effect on the system is the same as that of a static condenser, which also produces leading current.

Synchronous motors are made for power drives and power-factor-corection in sizes ranging from a few horse power to 50,000 kv-a. or more.

Power companies have synchronous condensers as large as 50,000 kv-a. connected directly to lines of 13,200 volts for correcting the power factor on their systems.

Special synchronous motors are made in very small sizes for the operation of electrical clocks and such devices. Some of these small motors operate on a fraction of one watt of electrical energy.

201. CONSTRUCTION AND EXCITATION

Synchronous motors are constructed almost exactly the same as alternators; in fact, an alternator may in many cases be operated as a synchronous motor. Synchronous motors have the A. C. armature winding or element and a D. C. field the same as alternators.

Small synchronous motors are sometimes made with stationary field poles which are excited by direct current, and with a revolving A. C. armature to which the line current is fed through slip rings.

Most medium and all large-sized synchronous motors, however, are made with revolving fields, the same as large A. C. generators. On these motors the alternating current line-energy is fed to a stationary armature or stator winding which sets up a revolving magnetic field, the same as in induction motors. The field poles on the revolving field or rotor receive their D. C. exciting current through slip rings.

As synchronous motors are always operated from alternating current lines, it is necessary to have some source of direct current for exciting their fields. This field supply is usually obtained from small D. C. exciter-generators, which are either mounted directly on the end of the synchronous motor shaft or may be belt-driven from a pulley on the shaft.

Fig. 188 shows a 75-h. p. synchronous motor of the revolving field type. This motor has its D. C. exciter-generator mounted on the end bracket and driven by the end of the main motor shaft. Note the slip rings and brushes, which are located just inside the end-plate of the synchronous motor and through which direct current from the exciter-generator is passed to the revolving field poles. This motor has six poles and is designed for 60-cycle operation, so its speed will be 1200 R.P.M.

Fig. 189 shows the stator of a large slow-speed synchronous motor, and Fig. 190 shows a large diameter revolving field for a synchronous motor of this type.

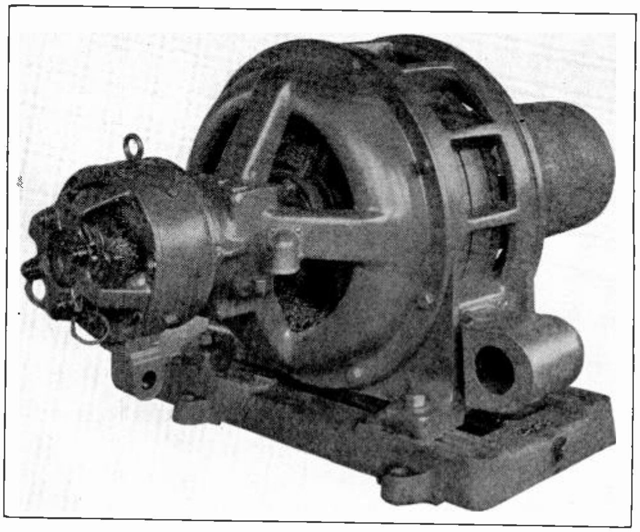

Fig. 188. This photo shows a 75 h. p. synchronous motor of the revolving field type. Note the small exciter-generator which supplies D. C. to the field of the large motor. (Photo courtesy General Electric Co.)

Large synchronous motors with a great number of poles can be made to operate at very low speeds and are, therefore, frequently used to drive slow-speed pumps or machinery by direct connection.

202. DAMPER WINDINGS

In addition to the D. C. windings on the fields of synchronous motors, they are usually provided with a **damper winding** consisting of short-circuited bars, similarly to the squirrel-cage windings used on induction motors. This damper winding can be clearly seen on the outer ends of the poles of the field rotor in Fig. 190.

Damper windings are provided on synchronous motors to obtain sufficient starting torque to enable the motors to start with some load attached, and also to prevent what is known as **hunting**. Hunting of synchronous motors will be explained a little later.

203. OPERATING PRINCIPLES

When synchronous motors are started, their D. C. fields are not excited until the rotor has reached practically full synchronous speed; so the starting torque to bring the rotor up to speed must be produced by induction.

When the stator winding of a synchronous motor is excited by being connected to the A. C. line, it immediately sets up the rotating magnetic field with which we are already familiar. The rotating flux of this field cuts across the damper winding of the revolving member or rotor and induces secondary currents in the bars of this winding.

The reaction between the flux of these secondary currents and that of the revolving stator field produces the torque necessary to start the rotor in motion and bring it up to speed.

If no damper winding is provided a synchronous motor will have very poor starting torque, as it must then depend upon the induced currents in the high-resistance field coils and the slight eddy currents in other parts of the rotor. This, however, is sufficient to start some of the older type synchronous motors which were not provided with damper windings, or to start alternators when they are used as synchronous motors.

When some of the older type synchronous motors were used to drive machinery which had to be started under load, they were often started and brought up to speed by means of a separate induction motor just large enough for this purpose.

In other cases, the synchronous motor was attached to the load by means of a friction clutch or magnetic clutch, so that the rotor could be disconnected from the load during starting and then pick up the load by means of the clutch after the rotor had reached synchronous speed and its D. C. field poles were excited.

This is not necessary with most modern synchronous motors which are properly adapted to their load; because it is possible, by properly proportioning the squirrel-cage damper winding, to design synchronous motors with fair starting torque.

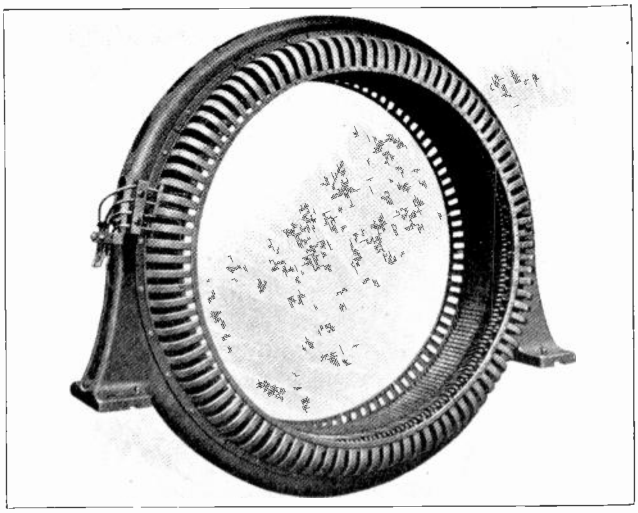

Fig. 189. Above is shown the stator of a large synchronous motor. You will note that the stator, frame, core, and windings are the same as those used for alternators.

When a synchronous motor has been brought up to nearly synchronous speed and is operating as an induction motor because of the damper winding, then the D. C. field poles are excited and the powerful flux of these poles causes them to be drawn into step or full synchronous speed with the poles of the rotating magnetic field of the stator.

During normal operation the rotor continues to revolve at synchronous speed, as though the D. C. poles were locked to the poles of the revolving magnetic field of the stator.

As a synchronous motor has no slip after the rotor is up to full speed, no secondary current is induced in the bars of the damper winding during normal operation.

204. PULL OUT TORQUE

If a synchronous motor is overloaded to the extent where the D. C. rotor poles are made to lag or pull out of step with the poles of the rotating stator field, the slip which results will again cause current to be induced in the damper winding and to develop torque by induction, as during starting.

If the overload is not too great or doesn't last for more than an instant, this torque developed by induction in the damper winding may enable the rotor to pull back into step; but if the overload is too great and lasts too long, the rotor will be pulled out of step with the revolving magnetic field, and the motor will lose its torque and will stall.

If the D. C. current supplied to the revolving field of a synchronous motor is interrupted during operation, the motor will, of course, lose its torque and will stop if there is any appreciable load connected to it.

We have found that a synchronous motor develops its torque by the attraction between the poles of the revolving magnetic field set up by the stator and the D. C. poles of the rotor, which are maintained at constant polarity by direct current through their coils.

We know that magnetic lines of force are more or less elastic, so we can readily see that it is possible for the D. C. poles of the rotor to be pulled back a little or caused to lag slightly behind the center of the revolving poles of the stator, without actually being pulled out of step far enough to lose the attraction between the poles and thereby lose the torque. This might be caused by sudden surges of load of very short duration.

With a moment's thought we can also see that if a north pole of the revolving field is pulled back and caused to lag a little behind the center of an

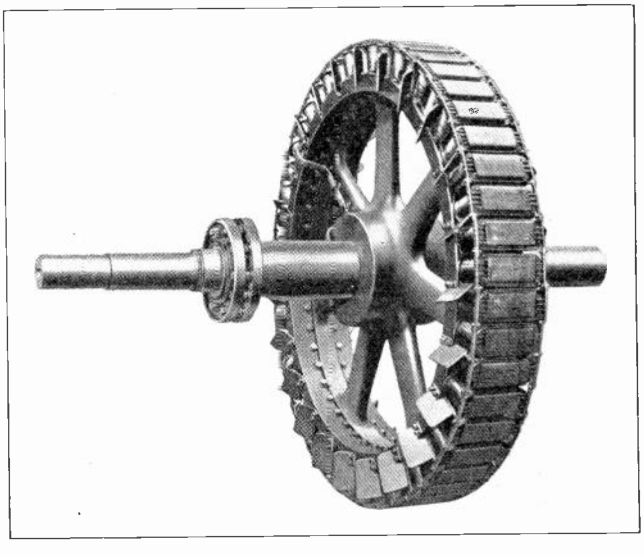

Fig. 190. Revolving field or rotor of a large slow-speed synchronous motor. Note the squirrel-cage damper winding attached to the pole faces and also the slip rings through which the D. C. is passed to the revolving field poles.

unlike pole or south pole of the stator field, this north pole of the rotor will be drawn closer to the adjacent north pole of the stator, which will tend to repel it and add to the torque, thereby keeping the rotor in step if the load is not too great.

205. HUNTING

If a heavy load is suddenly removed from the synchronous motor, the rotor will tend to surge ahead and, due to the elastic nature of the flux, the D. C. poles may for an instant actually surge a little ahead of the revolving poles of the stator.

Sometimes fluctuations in the mechanical load or in the line voltage may in this manner cause the rotor of a synchronous motor to surge or oscillate back and forth more or less irregularly. This is known as **hunting.**

The hunting of the synchronous motor can usually be noticed by a change in the normal operating sound or the smooth, steady hum which is given off by a motor when it is operating properly. The hunting causes a rise and fall, or sort of throbbing note, to come into this sound. This audible note may be of very low frequency, even as low as several oscillations per minute, or it may be of much higher frequency. This will be according to the size and design of the machine and according to the nature of the disturbance which causes the hunting.

Another indication of hunting may be had by watching the pointers of any ammeters connected in the line circuit to the motor. Hunting causes the stator current to increase and decrease, and this will cause the ammeter needle to swing back and forth at the same frequency as that at which the sound or hunting note occurs. During normal operation, the ammeter pointer should change only when the load is changed or when the field excitation is varied.

Hunting may be due to anyone of the following causes: (A) Fluctuations in mechanical load on the motor. (B) Surging of generators on the line. (C) Switching surges. (D) High or low frequency surges. (E) Regular or pulsating electric loads on the line. (F) Hunting of other synchronous motors on the same line.

Hunting should not be allowed to continue, because it may set up very dangerous mechanical stresses within the motor, and it will also produce objectionable surges of current on the A. C. line supplying the motor.

Damper windings play a large part in the prevention of hunting, because, as soon as the rotor attempts to fall behind or surge ahead of the poles of the rotating stator field, the slip at once causes secondary currents to be induced in the damper winding, and thereby develops inductive torque which tends to hold the rotor at constant speed.

In some cases a synchronous motor may have a tendency to hunt, even though it is equipped with damper windings. Changing the voltage applied to the D. C. field may cause the motor to stop hunting, and if this doesn't stop it, it may be necessary to shut the motor down and restart it. This will often eliminate the hunting.

Sometimes a slight increase or decrease of the mechanical load on the motor may help to stabilize its speed and prevent hunting.

If none of these things will stop it, it will then be necessary to definitely locate and eliminate the cause; which may be in the A. C. supply line, on the exciter-generator, or in the mechanical load.

Fig. 191 shows a large synchronous motor of 2000 h. p., designed for operation on 2300 volts and at unity power factor. Note the exciter-generator, which in this case is mounted on a separate pedestal at the right of the motor. The armature of the exciter is mounted on the motor shaft and is directly driven at the same speed as the synchronous motor.

Fig. 192 shows a three-phase synchronous motor of 150 h. p. which has its exciter driven by means of a large pulley on the end of the motor shaft and a special rope belt. This makes possible the use of a small, high-speed, D. C. generator.

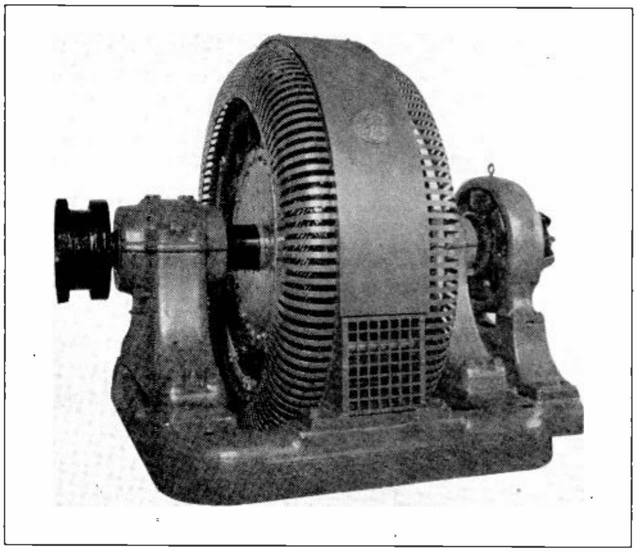

Fig. 191. This photo shows a 2000-h. p., 2300-volt, synchronous motor which operates at 100% power factor. The D. C. exciter-generator is shown on the right-hand end. (Photo courtesy General Elec. Co.)

206. CONNECTIONS OF SYNCHRONOUS MOTORS

Fig. 193 shows a diagram of the connections for a synchronous motor and its exciter-generator. You will note that the wiring and connections for this machine are practically identical with those for an alternator, with the exception that a rheostat is not always used in the field circuit of the synchronous motor.

Regardless of the A. C. voltage at which the synchronous motor may be operated, the exciter voltage is seldom higher than 250 volts. The capacity of the exciter-generator in kw. usually ranges from 1 to 3 per cent of the kv-a. rating of the synchronous motor.

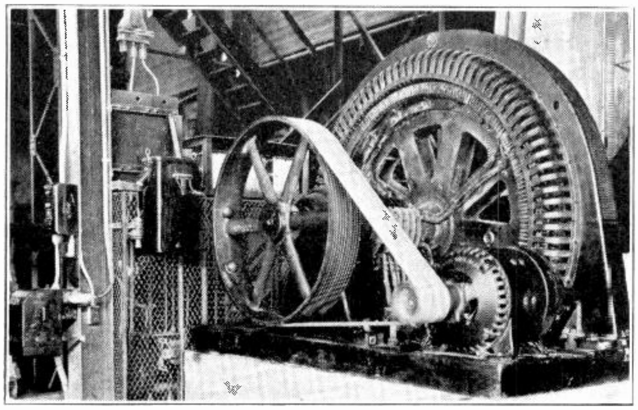

Fig. 192. 150-h. p., 2300-volt, low-speed, synchronous motor and exciter. The speed of the large motor is 144 RPM. (Photo courtesy Allis-Chalmers Mfg. Co.)

By adjusting the exciter field rheostat, f, the voltage applied to the D. C. field of the synchronous motor can be varied. This varies the current flow through the field coils and changes the magnetic strength of the poles. By means of this rheostat the strength of the motor field can be properly adjusted for the mechanical load which it is to drive, and for the amount of power-factor correction it is to perform.

The field discharge switch, d, and resistance, e, are for the same purpose as when used with alternators; that is, to prevent high induced voltages in the field winding when the circuit is interrupted.

The damper winding of the rotor is shown in this diagram by the short-circuited bars in the pole faces.

207. STARTING SYNCHRONOUS MOTORS

When starting the motor, the stator is supplied with alternating current by closing the knife switch or oil switch at "b". Some form of compensator is generally used with large synchronous motors to reduce the voltage applied to the stator when starting, and in this manner keep down the heavy surges of starting current which would otherwise occur.

When starting a synchronous motor, there are a certain number of steps or operations which should be performed in the proper order. This is particularly important when starting large motors. The procedure is as follows:

First, open all switches and see that the field switch is in the discharge position; then apply about 50% of the rated voltage to the stator winding. It may be necessary to apply higher voltage if the motor is to start heavy loads.

As soon as the rotor has reached nearly full speed, full line-voltage can be applied to the stator. Next, see that the exciter rheostat is properly adjusted so that the D. C. generator produces a low voltage as indicated by the voltmeter, V; and with this low voltage excite the field of the synchronous motor very weakly.

Gradually increase the field excitation until the motor pulls into step, and then adjust the field strength to the proper value to enable the motor to carry the mechanical load, in case it is driving any load of this nature, and for the proper power factor at which the motor is supposed to operate.

Large synchronous motors usually have A. C. ammeters connected in series with the line leads to the stator, and the current input to the motor should not exceed the name-plate current rating, except as per instructions furnished by the manufacturer in regard to the overload capacity of the motor.

Even though a synchronous motor is not driving any mechanical load, it is possibe to overload the stator winding with A. C. by over-exciting the D. C. field and thus causing the motor to draw a large leading current. This, of course, tends to correct the power factor of the system to which the motor is attached, but the synchronous motor should not be overloaded for this purpose any more than it should for driving mechanical load.

208. ADJUSTING POWER FACTOR BY CHANGING FIELD EXCITATION

By adjusting the exciting current, the power factor of a synchronous motor may be varied in small steps from low lagging power factor to a low leading power factor. This makes it possible to vary the power factor of these machines over a wide range and places this characteristic of the motor under the control of the operator at all times.

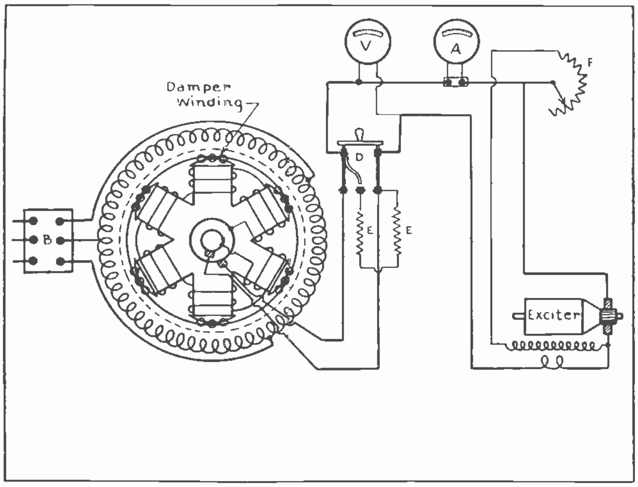

Fig. 193. The above diagram shows the connections for the stator and field of a synchronous motor and also the exciter-generator field discharge switch and instruments.

If a synchronous motor which has normal field excitation were driven as a generator, it would develop the same armature voltage as that which is applied by the A. C. line when the machine is operating as a motor. If the field current is increased above this normal value, the motor will have a leading power factor; and if the field current is below normal value, the motor will have a lagging power factor.

When a synchronous motor is used to drive mechanical load and also to correct power factor, the field will require a small additional amount of exciting current.

209. STARTING COMPENSATORS AND PROTECTIVE DEVICES

Fig. 194 shows a diagram of the connections for a large synchronous motor; including the starting compensator, A. C. ammeter, circuit-breaker, and protective devices.

When starting, the contacts B are opened and contacts C and D are closed, thus supplying reduced voltage to the motor armature J by means of the auto transformer E.

After the motor comes up to speed, the contacts C and D are opened and B is closed, thus supplying the armature or stator winding with full line-voltage.

If at any time during operation the motor is overloaded and the current flow to the stator winding becomes too great, the current in the secondaries of the current transformers H will be increased and will energize the overload trip coils G and G strongly enough so that they will open the circuit-breaker contacts B.

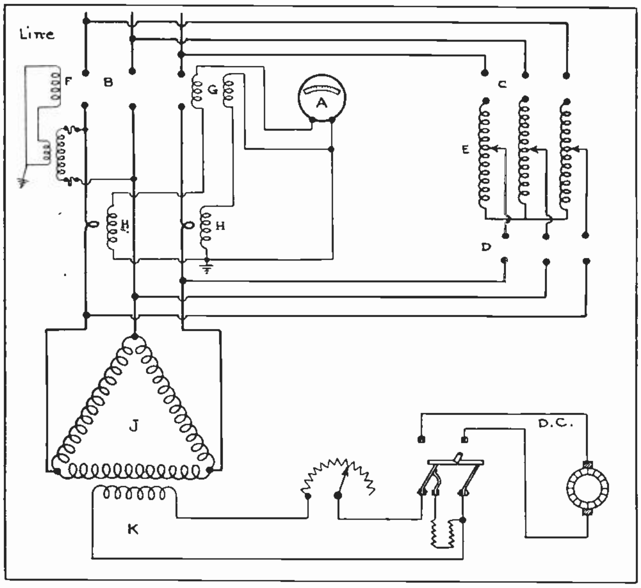

Fig. 194. Diagram of connections for a large synchronous motor with a compensator for starting at reduced voltage. Also note the protective device connected with a circuit-breaker in the line leads.

If the A. C. line-voltage should fail or become too low during operation of the motor, this would also reduce the voltage of the potential transformer secondary and weaken the under-voltage trip-coil F, allowing it to release its armature and open the circuit-breaker B. The D. C. field of the synchronous motor is shown at K.

To stop a synchronous motor or condenser, first decrease the field excitation to normal and then open the line switch. Next open the field-discharge switch and leave it in the discharge position. This switch can be left closed until the machine stops if desired, but should always be opened then.

210. CHARTERISTICS AND ADVANTAGES OF SYNCHRONOUS MOTORS

The efficiency of medium and large-sized synchronous motors ranges from 88% to 96%, depending upon the size, speed, design, etc. Some very large synchronous motors have been built with efficiencies of nearly 98%.

The starting torque of synchronous motors is usually slightly lower than that of induction motors, but many of the later type synchronous motors are designed with starting torques approximately equal to those of squirrel-cage motors.

These starting torques vary from 50% to 150%, according to the design of the machine.

The pull-out torque of synchronous motors varies from 150% to 200% or more of full-load torque.

Several of the outstanding advantages of synchronous motors are: (a) their constant speed; (b) ability to correct power factor, which in turn results in better voltage regulation; (c) higher efficiency at low speeds than induction motors.

The ability of synchronous motors to correct power factor is by far the most important of their advantages.

Synchronous motors have several features which may be considered as disadvantages and these are: (a) they are somewhat more complicated than induction motors; (b) lower starting torque of the older types; (c) tendency to hunt and therefore to fall out of step and stall; (d) they require more skilled attention than induction motors do; (e) they require a supply of both A. C. and D. C.; (f) in case of shorts on the line, synchronous motors act as generators and supply current to the short as long as the inertia keeps the rotor moving at a fair speed. This latter disadvantage can, however, be eliminated with proper protective relays.

211. APPLICATIONS OF SYNCHRONOUS MOTORS

The advantages of synchronous motors for certain classes of service much more than make up for the disadvantages which have just been mentioned.

Fig. 195 shows two 600-h. p. synchronous motors used to drive low-pressure water pumps of the screw-propeller type. Fig. 196 shows a group of synchronous motors driving compressors in an ice plant.

Synchronous motors have a very wide field of application and their use is being rapidly extended to other classes of power drives each year. A large number of power generating and public utility companies insist that all motors of 50-h. p. and larger which are connected to the lines must be of the synchronous type. This is done in order to improve the power factor of the system and thereby permit better utilization of the generator line and transformer capacities.

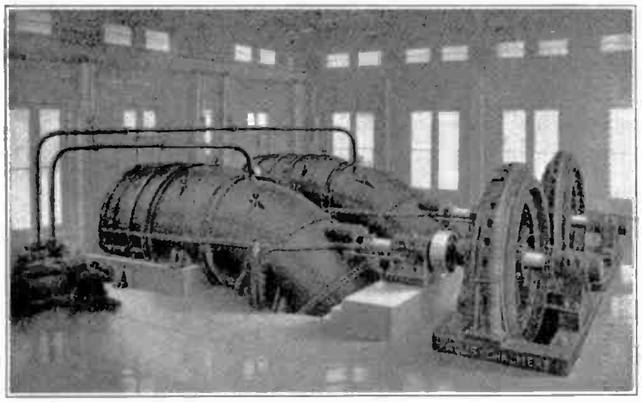

Fig. 195. This photo shows 2600-h. p. synchronous motors driving low-pressure, screw type water pumps. (Photo courtesy Allis-Chalmers Mfg. Co.

With lower power factors, a large portion of the generator line and transformer capacities must be used for the circulation of lagging wattless currents.

A number of the more common uses or applications for synchronous motors are as follows:

Operation of compressors and pumps; operation of fans and blowers, motor-generators, and frequency changers; steel mill drives; paper mill drives; crushers and grinders; line-shaft drives; and as synchronous condensors for power-factor correction only.

212. SUPER-SYNCHRONOUS MOTORS

It has previously been mentioned that, in order to start with loads, synchronous motors are sometimes connected to the load by means of friction or magnetic clutches. A variation of this principle is used on a special synchronous motor which has been designed for starting heavy loads and is known as a **super-synchronous** motor.

This type of motor has the stator frame arranged so that during starting the entire frame and core can revolve on auxiliary bearings on the motor shaft. This allows the rotor, which is attached to the load, to remain stationary until the stator is revolving around it at full synchronous speed.

The field is then excited with D. C. and a brake is gradually applied to the stator frame, causing it to reduce speed and finally bringing it to a complete stop. This gradually exerts upon the rotor poles the full running torque of the synchronous motor, and as soon as the brake is applied the rotor begins to turn and drive the load, coming up to full synchronous speed by the time the stator frame is completely stopped.

This method permits the use of the full running torque to start the load and allows the starting to be accomplished at much higher power factor.

Fig. 197 shows a 300-h. p. super-synchronous motor of the type just described. In this figure you will note that the stator frame is not attached to the bearing pedestals but is instead mounted on its own bearings on the motor shaft. You will also note

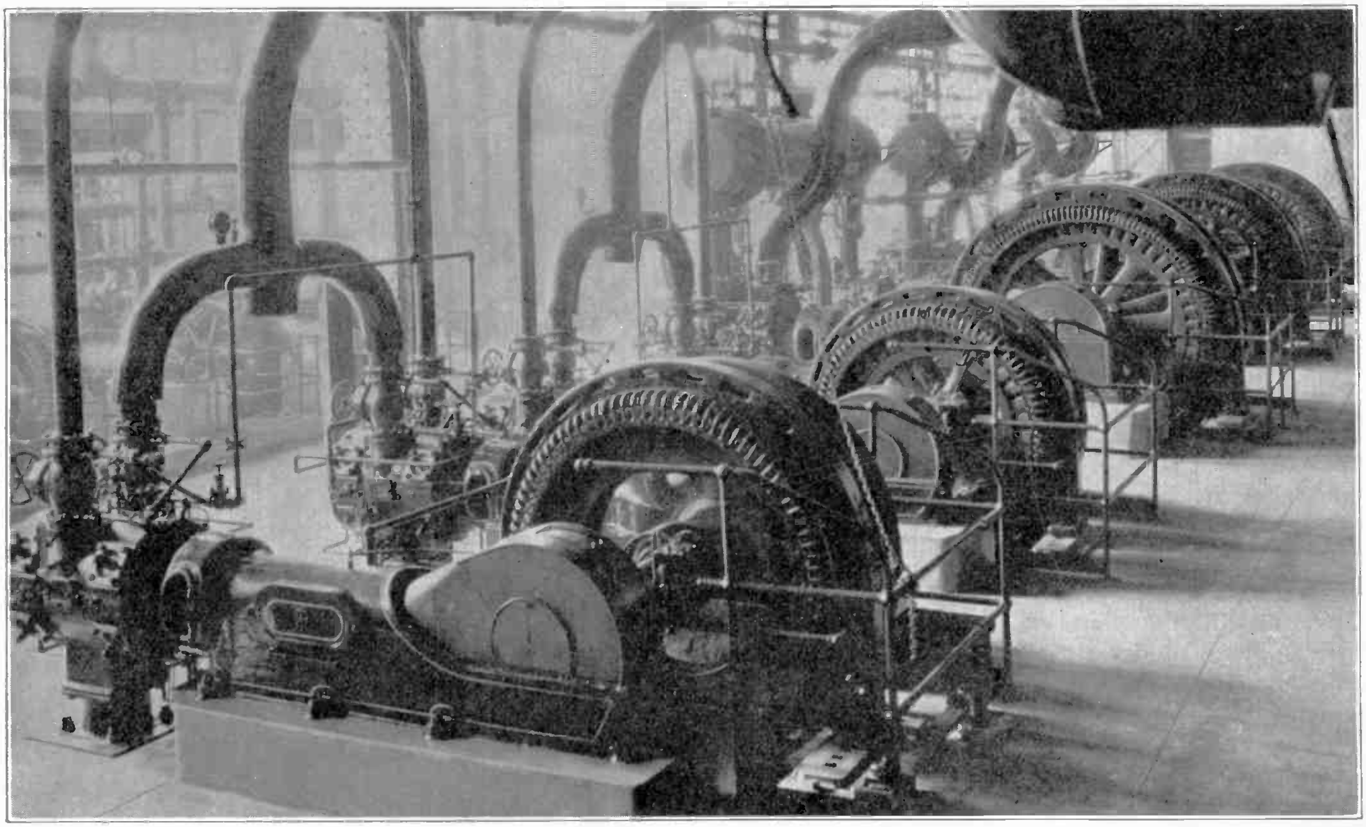

Fig. 196. Group of large synchronous motors used to drive compressors in an ice plant. Many large ice plants and refrigerating plants use motors of this type to operate their ice machines.

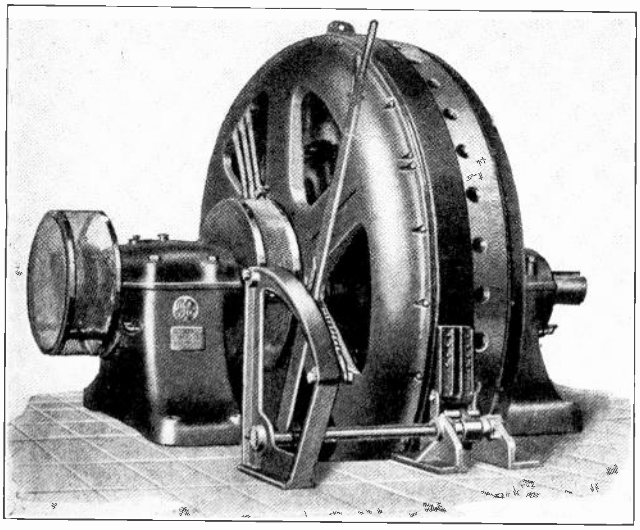

Fig. 197. Super-synchronous motor which is equiped with a revolvable stator and brake to obtain high starting torque. (Photo courtesy G. E. Company.)

the brake-band around the outside of the stator frame and the brake-link and lever which are used to tighten the band and stop the rotation of the stator and thereby cause the rotor to start the load.

The slip rings of this motor are mounted on the left end of the shaft inside of the protective screen, and the leads are taken through the hollow shaft to the D. C. rotor poles.

Fig. 198 shows a group of large super-synchronous motors in use in a cement mill. Two sets of slip rings must be used with motors of this type; one set for conveying the alternating current energy to the stator or armature when it is revolving during starting period, and the other set for supplying the direct current to the rotor, which revolves all the time during the operation.

The method of calculating the proper size of synchronous condenser to use for correcting the power factor of a system, will be covered in later paragraphs.

213. SPECIAL A. C. MOTORS

In addition to the common types of A. C. motors which have just been explained and which are in very general use throughout the entire electrical industry, there are also a number of special A. C. motors which are designed with certain characteristics to meet unusual requirements.

Several types of these which have been more recently developed are proving very satisfactory and have excellent advantages for certain classes of work. Some of these motors, or the principles involved in their design, will come into much more extensive use in the next few years, and for this reason they are worth a little special attention at this point.

The principles on which these motors operate are in general more or less similar to those of common types of machines with which you are already familiar. Therefore, it is not necessary to go into great detail in discussing them; so we shall merely explain the application of these principles to several of the most popular types of special motors and shall also explain the characteristics and applications of these machines.

214. DOUBLE SQUIRREL-CAGE MOTORS

We have already learned that it is possible to obtain much better starting torque from induction motors by the use of a certain amount of resistance in the rotor circuit. It is not always desirable to use a slip-ring motor with the auxiliary controls required; and, if squirrel-cage motors are designed with rotors of very high resistance, this resistance while improving their starting torque, will also decrease their running efficiency.

To obtain the very good starting torque of the high-resistance rotor and also the higher running efficiency of the low-resistance rotor, induction motors have been developed with what are called **double squirrel-cage rotors.**

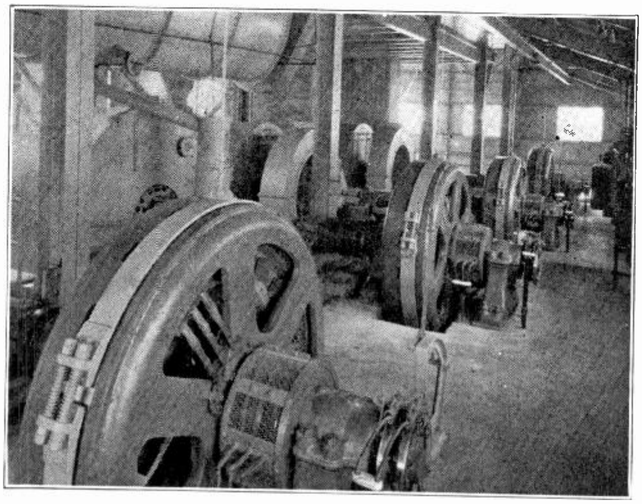

Fig. 198. This photo shows four large low-speed super-synchronous motors operating at 2200 volts and driving machines in a cement mill. (Photo courtesy G. E. Company.)

These rotors consist of the usual core of laminated iron equipped with specially-shaped slots in which are imbedded the bars of two squirrel-cage windings. One squirrel-cage with large bars of low resistance is imbedded deeply in the iron core in the bottoms of the slots, and another squirrel-cage with smaller bars of higher resistance is located close to the outer surface of the rotor core with the bars placed just beneath the core surface.

Fig. 199 shows on the left a sectional view of such a rotor which has been cut in two to show the position of the low-resistance squirrel-cage at "A" and the high-resistance squirrel-cage at "B". On the right in this figure is another view of a double squirrel-cage of this type from which the iron core has been removed by acid. This view shows very clearly the construction of the inner or low-resistance element and the outer or high-resistance element.

Fig. 200 shows a complete rotor of the double squirrel-cage type in which the bars and end rings of the squirrel-cages are cast of aluminum which has been poured directly into the openings in the iron core, thus making it one very solid unit when completed.

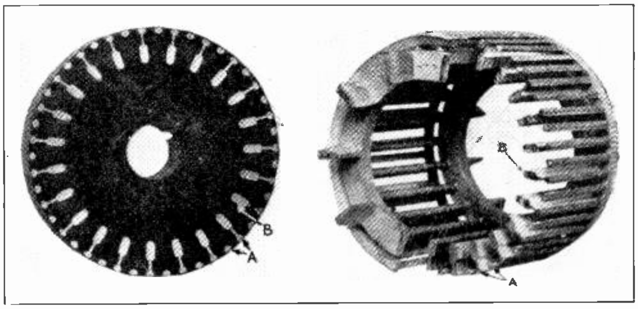

Fig. 199. This figure shows two views of a double squirrel-cage rotor. On the left is a sectional view and on the right the core iron has been eaten out by acid clearly showing the construction and shape of the double squirrel-cage. (Photo courtesy General Electric Co.)

215. OPERATING PRINCIPLES

These motors have an ordinary stator winding, the same as any polyphase induction motor. When the stator is supplied with A. C. from the line, the revolving magnetic field induces secondary currents in both of the squirrel-cage windings and sets up the torque which starts the motor.

During starting, however, the outer or high-resistance squirrel-cage is the one which is most active, and very little current is carried by the inner cage during this period. This is due to the fact that the smaller high-resistance bars are located near the outer edge of the rotor core and have much less iron or magnetic material around them. This means that they provide a path of much lower reactance than the inner bars, which are completely surrounded with a heavy path of iron.

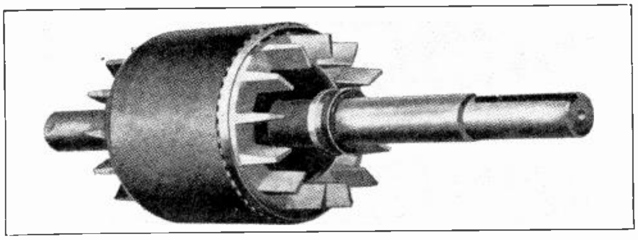

Fig. 200. Complete rotor of the double squirrel-cage type. Note that there are no open slots around the rotor core, the bars being cast into the rotor.

This outer winding of low reactance provides a much easier path for the high-frequency secondary currents which are induced during starting when the slip of the motor is very great. After the motor is up to nearly full speed and the slip is very small, the frequency of the induced rotor currents is then much lower, and as low frequency A. C. can pass through an inductive circuit much easier than high frequency, the low-resistance bars of the inner squirrel-cage now offer an easy path for the flow of rotor current during normal running of the motor.

We find, therefore, that the changeover of the current from the high-resistance, starting squirrel-cage to the low-resistance, running cage is entirely automatic and requires no switches or moving contacts; being due entirely to the change of frequency and magnetic characteristics of the motor between the period of high slip during starting and reduced slip when running.

Double squirrel-cage motors are very suitable for jobs which require heavy starting torque and where simple, rugged motors requiring a minimum of maintenance are desired. The double-squirrel-cage principle is not altogether new, having been used in induction motors since their early development; but it is only in recent years that this principle has come into general use in commercial power motors.

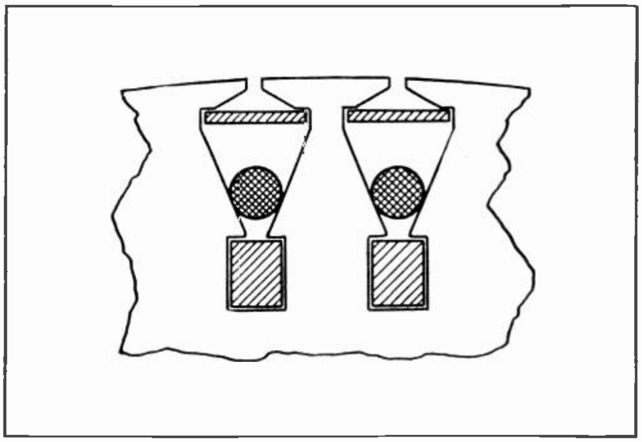

Fig. 201. This sketch shows the slot and bar construction of double squirrel-cage rotors using iron "choker bars" to change the resistance of the field and outer circuits.

216. DOUBLE-SQUIRREL-CAGE MOTORS WITH "CHOKER BARS"

Several different styles of double-squirrel-cage motors are in use at present. Some of these use different variations of the principle, but in general their operation is very much the same. One motor of this type which is made by the Fairbanks Morse Company, uses a set of loose iron bars or rods which are placed in the slots between the inner and outer squirrel-cage bars. These bars change their position by centrifugal action when the motor comes up to speed, thus changing the magnetic path and thereby varying the reactance of the squirrel-cage circuits.

Fig. 201 shows a cross-sectional view of two slots of a rotor of this type. The low-resistance squirrel-cage bars are located in the inner slots, and the high-resistance squirrel-cage bars are the thin flat ones shown near the outer edges of the slots.

When the motor is first started, the round iron bars are held in the bottom of the slots by the magnetic action of the flux set up in the rotor. This completely closes the iron path around the inner squirrel-cage, making this path one of very high resistance, so that only a very small amount of the starting current flows in this winding.

When the motor reaches nearly full speed, the iron bars are thrown outward by centrifugal force, thereby decreasing the amount of magnetic material around the inner bars, and increasing the amount of iron around the outer bars.

This reduces the reactance of the inner squirrel-cage and increases the reactance of the outer one which, we recall, is already of high resistance. This causes a very decided shift of the lower frequency currents induced in the rotor during running, from the high-resistance rotor to one of low resistance.

217. BTA VARIABLE-SPEED A. C. MOTORS

Another type of A. C. motor, known as the BTA motor, has been developed by the General Electric Company to meet the needs of various power-driven machines which require adjustable speed A. C. motors with characteristics similar to those of the shunt D. C. motor.

These motors have a stator winding and two windings on the rotor, and also use a commutator and brushes similar to those of a D. C. machine.

Fig. 202 shows a diagram of the windings and connections of a motor of this type. You will note that the alternating current line connects to one of the rotor windings, "P", by means of the brushes and slip rings. When this winding is excited with A. C. from the line, it sets up a revolving magnetic field and also induces secondary currents in the stator windings: S-1, S-2, and S-3.

The winding in the stator is constructed similarly to stator windings of ordinary induction motors, except that the three phases are connected separately to the three pairs of brushes which rest on the commutator. These brushes are adjustable and can be moved closer together or farther apart. When they are resting on the same commutator segment the stator windings are short-circuited, so that a rather heavy flow of induced secondary current is set up in these windings.

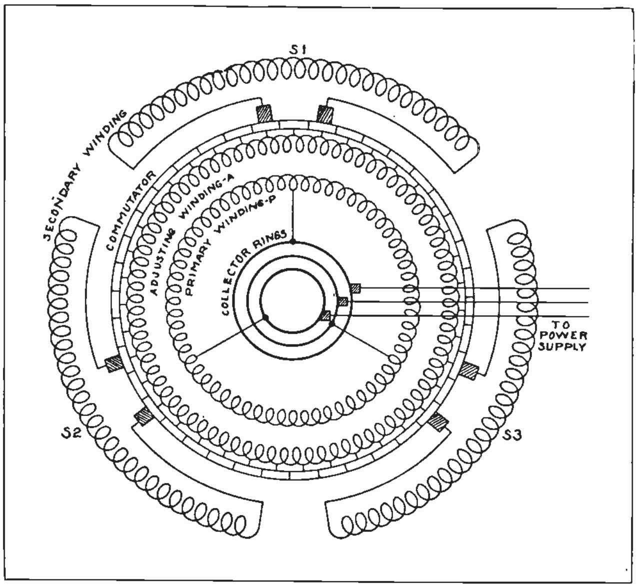

Fig. 202. This diagram shows the connections of the armature and stator windings of a BTA variable speed A.C. motor. Examine the diagram carefully while reading the accompanying explanation.

The adjusting winding, "A", which is also carried on the revolving armature and is connected to the bars of the commutator, generates a certain amount of voltage which is applied to the brushes that connect to the stator winding.

When these brushes are moved farther apart, a greater amount of adjusting voltage is applied to the stator windings. By shifting the brushes and varying this voltage, the speed of the motor can be changed.

218. CHARACTERISTICS

These motors are usually built for a range of speed variation of three to one, and are designed to operate at constant torque at any speed within their range. This means that the horse power will be proportional to the speed at which they are operated.

The efficiency of these motors remains nearly constant over the greater part of their speed range, but is slightly lower at the lowest operating speeds. Their average efficiency is high compared with that of wound-rotor induction motors having secondary resistance.

The power factor of this type motor is about the same at synchronous speed as the power factor of an ordinary induction motor of the same size, and becomes higher when the motor is operated at higher speeds.

BTA motors will develop from 140 to 250 per cent. of full-load torque during starting and with starting currents of only 125 to 175 per cent. This ability to develop heavy starting torques with comparatively small starting current is one of the very desirable features of these motors.

When operating at their lower speeds, the pull-out torque of these motors is from 140 to 250 per cent. of full-load torque, and when operating at higher speeds the pull-out torque varies from 300 to 400 per cent. of normal-load torque.

Fig. 203 shows the armature of a BTA motor removed from the machine. The commutator is connected to the adjusting winding on the armature similarly to the connections for an ordinary D. C. motor armature and commutator. The slip rings on the left end of the shaft have leads taken from them through the hollow shaft to the A. C. winding on the armature.

You will note also the ventilating fan which is attached to the armature at the rear of the commutator.

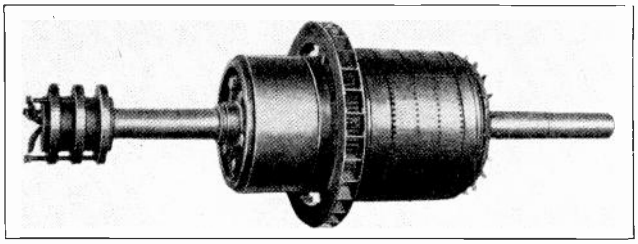

Fig. 203. Armature of a BTA motor showing the commutator, slip rings, and ventilating fan. (Courtesy G. E. Company)

Fig. 204 shows a complete BTA motor. The small hand-wheel on the upper arm of the end-bracket is used for adjusting the position of the brushes and thereby changing the motor speed. The collector rings on the end of the shaft are enclosed in a safety hood or guard, as shown. The line leads are brought out of this hood for connection to the three-phase A. C. line.

The small box on the side of the motor frame near the base contains an overload relay to protect the motor from too heavy overloads. This relay is connected to the starting switch or motor controller so that it will trip the starter and open the line circuit in case of excessive overload currents to the motor.

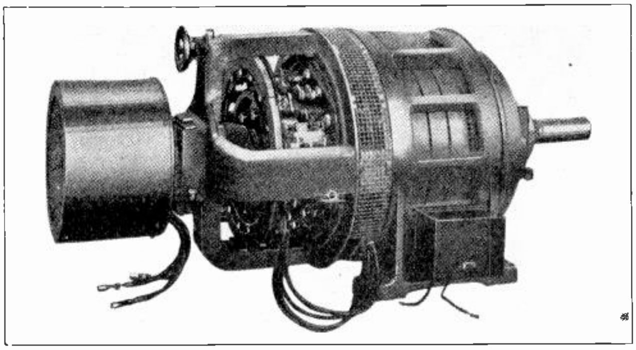

Fig. 204. This photo shows the completely assembled BTA motor. The brush-shifting wheel can be seen on the upper corner of the frame and the slip rings are enclosed in the housing at the left end of the shaft. (Courtesy G. E. Company)

Fig. 205 shows the standard ratings of type BTA motors. These are made in six, eight, and ten-pole types for normal speeds of 1200, 900, and 720 R.P.M. You will note from the table that the six-pole machines can be varied above or below their normal speed of 1200 R.P.M., within a range of 550 to 1650 R.P.M. The normal speed of 900 R.P.M. for the eight-pole machines can be varied from 415 to 1215 R.P.M., and the normal speed of 720 for ten-pole machines can be varied from 333 to 1000 R.P.M.

You will also note from the center column of the table that the horse power varies in proportion to the speed. For instance, the 5-h. p. motor develops only 1.67 h. p. at its lowest speed of 550 R.P.M. In other words, when the speed is reduced to one-third the horse power is also reduced to one-third.

The motor with maximum rating of 10-h. p. at high speed develops only 3⅓ h. p. at its lowest speed, etc.

219. FYNN-WEICHSEL MOTORS

Another special type of motor which is manufactured by the Wagner Electric Corporation, is known as the **Fynn-Weichsel** motor. These motors are really combination induction and synchronous motors, and have excellent starting torque and very high power factor when running fully loaded. They start as an induction motor and will start loads of 150% or more, quickly bringing them up to full speed, and at this point the motor changes over and runs as a synchronous motor during normal operation.

If during operation the motor is overloaded beyond 160%, it will pull out of synchronism and again operate as an induction motor up to overloads of approximately 250% or more before it will stall.

These characteristics have made this type of motor very popular in the last few years for certain classes of drives where motors with good starting torque, constant speed, and high power-factor are required.

Another decided advantage of the Fynn-Weichsel motor is that it supplies its own direct current for exciting the D. C. field winding, and therefore does not require separate exciter-generators as ordinary synchronous motors do.

220. CONNECTIONS AND OPERATING PRINCIPLES

Fig. 206 shows a diagram of the windings and connections for a Fynn-Weichsel motor. The revolving armature or rotor has a main A. C. winding connected to slip rings and to the A. C. line. In addition, it also has a small D. C. winding which is connected to the commutator and develops in the neighborhood of 24 volts of direct current for excitation of the D. C. field poles.

This field winding is placed in the slots of a stator and is uniformly distributed over the stator core, instead of being wound on projecting field poles as in the ordinary synchronous motor.

The diagram in Fig. 206 shows the D. C. field-winding connected to the brushes of the commuta-

Rating of Standard B T A Motors

Number of Poles	H. P.	Full Load Speed
6	5/1.67	1650/550
6	7.5/2.5	1650/550
6	10/3.33	1650/550
6	17.5/5.83	1650/550
8	25/8.33	1250/415
8	35/11.67	1200/415
10	50/16.67	1000/333

Fig. 205. The above table gives the horsepower rating and speed ranges of standard BTA motors. Note how the h.p. varies with the speed.

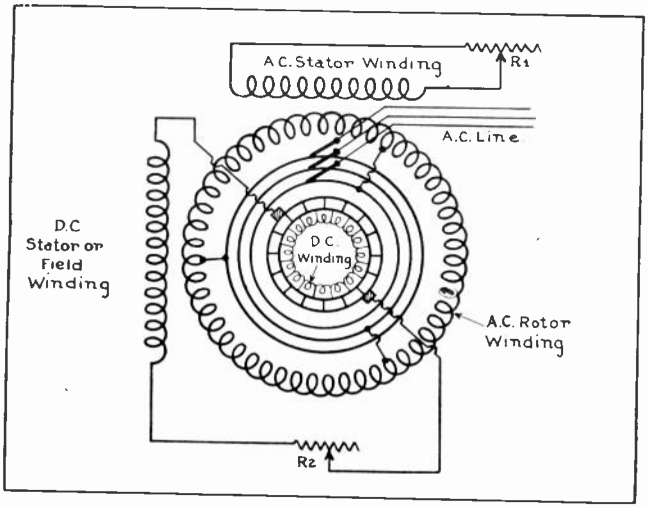

Fig. 206. Diagram showing the connections of the armature and field of a Fynn-Weichsel motor. Note that both the stator and armature have two separate windings.

tor and equipped with a rheostat for varying the field strength. In this simple diagram the single coil or winding shown is used to represent the entire field winding and whatever number of poles it may actually contain.

There is also an A. C. winding which is placed in the slots of the stator and is connected through a rheostat to form a closed circuit upon itself. This winding is located 90 degrees from the D. C. winding in the stator.

When alternating current is applied to the slip rings and the A. C. winding on the rotor, it sets up a revolving magnetic field and also induces secondary currents in both the A. C. stator-winding and the field winding.

The reaction between the flux set up around these windings and the field of the A. C. rotor winding, develops excellent starting torque and quickly brings the motor up to full speed. As the speed of the motor increases, the D. C. voltage produced by the small winding and applied to the brushes becomes higher and higher; and when the motor reaches nearly full speed, the value of this voltage increases the strength of the D. C. field winding and causes the motor to pull into synchronism and operate as a synchronous motor during normal running conditions.

If the motor is overloaded beyond the pull-out torque capacity of about 160% full-load torque, it will then fall out of step and operate as an induction motor, once more continuing to carry the overload at slightly reduced speed.

During starting of the motor, rheostat R-1 is adjusted to include the proper amount of resistance in series with the A. C. secondary winding in the stator. This resistance is cut out as the motor comes up to speed and the winding is then short-circuited.

When the motor pulls into synchronous speed there is no more slip, so there will be no appreciable current induced in this stator winding as long as the motor operates as a synchronous machine.

If the motor is overloaded to a point where it pulls out of synchronous operation and slightly reduces its speed, this recurrence of the slip will immediately cause current to be induced in the stator winding once more and thus develop by induction the added torque which enables the motor to carry the very heavy overloads which it is capable of carrying as an induction motor.

221. LEADING POWER FACTOR AND P. F. ADJUSTMENT

Rheostat R-2 can be adjusted to obtain the proper strength of the D. C. field-winding according to the load the motor is required to carry and the power factor which it is desired to maintain.

At full load the Fynn-Weichsel motor generally has a power factor of about 92% leading. From this we can see that if one or more motors of this type are used in a plant with induction motors and other inductive equipment they will improve the power factor considerably.

In fact, a 15-h. p. Fynn-Weichsel motor with its leading power factor will just about neutralize the lagging power factor of the 15-h. p. slip-ring, induction motor, thereby keeping the power factor at approximately unity on the line or system on which the two motors are operated in parallel.

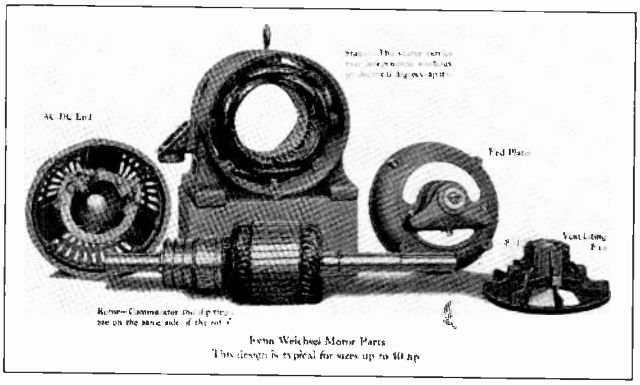

Fig. 207. Disassembled view of Fynn-Weichsel synchronous motor. Note the commutator and slip rings both on the same end of the shaft and also the two windings in the stator. (Photo courtesy Wagner Electric Corp.)

While the power factor of squirrel-cage induction motors becomes very low when they are operating lightly loaded, the power factor of the Fynn-Weichsel motor remains practically constant with any decrease of load which ordinarily occurs on a motor properly selected for its drive.

Fig. 207 is a disassembled view of a Fynn-Weichsel motor and shows clearly the construction of the rotor with its commutator and slip rings, and also the arrangement of the D. C. and A. C. windings in the stator.

Fig. 208 shows a complete Fynn-Weichsel motor with protective guards over the commutator, slip rings, and brushes.

222. SPECIAL ENCLOSED-TYPE MOTORS

In certain plants and classes of work where motors must operate in an atmosphere that is filled with dust or vapors it is often very difficult to keep the ventilating spaces in the motor windings from clogging with dust or to prevent the insulation of the windings from being damaged by vapors.

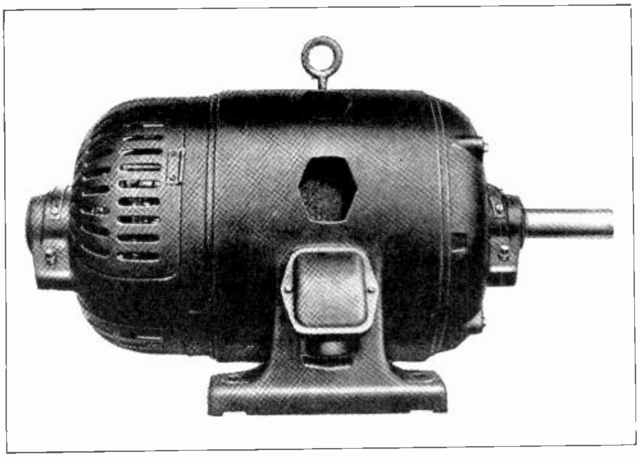

Fig. 208. This photo shows a completely assembled Fynn-Weichsel motor with a guard enclosing the slip rings and commutator. (Courtesy Wagner Electric Corp.)

To meet these conditions there are motors now being built with the winding, rotor, and bearings completely enclosed in an air-tight casing. These motors are so designed that the heat from the windings is conducted to the outside through the metal shell or casing. The regular motor casing is in turn enclosed in an outer jacket which guides a strong draft of cooling air directly over the surface of the motor casing, thus greatly aiding in the cooling of the machine.

Fig. 209 shows several views of a motor of this type. The upper left view shows the end from which the cooling air is exhausted from the jacket. The upper right view shows the air-intake end, with a screen which prevents coarse objects from getting into the fan and also protects an operator's hands from coming in contact with the revolving fan-blades. The lower view shows the motor and its enclosing frame removed from the air jacket and also shows the large ventilating fan used to form the strong draft of air over the motor casing. Motors of this type can be operated in extremely dusty places without injury to field windings or bearings by dust or vapors in the air, and also without explosion hazard in the case of commutator or slip ring types.

There are a number of other special types of motors which have been developed to fit almost every requirement and class of service for which a power drive is required. However, the general principles of these machines are very much alike and are similar to those which have been described in this section; so you will have no trouble in understanding almost any type which you may encounter.

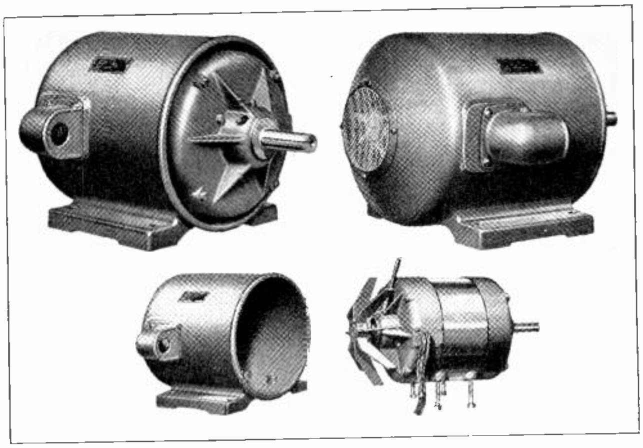

Fig. 209. Completely enclosed A.C. induction motor with special air-jacket to direct the cooling air over the surface of the motor casing. These motors are ideal for use in extremely dirty locations or in places where there are explosive vapors or dust.

223. PORTABLE MOTORS FOR FARM USE

Fig. 210 shows a polyphase induction motor and push-button starter mounted on a convenient portable truck, with a heavily insulated extension cord for connecting the motor to a nearby line or transformer. Portable motors of this type are very convenient for certain temporary drives in industrial plants and factories, and are also coming into quite extensive use on farms.

There are numerous profitable uses for electric power on the farm, and many thousands of farms in the U. S. and Canada are well electrified and making excellent use of electricity for both light and power purposes.

Fig. 211 shows a portable electric motor being used for driving a hay baler. Motors of this type can also be used to operate threshing machines, pumps for irrigation and stock watering purposes, ensilage cutters, feed grinders, line-shafts in machine repair shops, and many other uses.

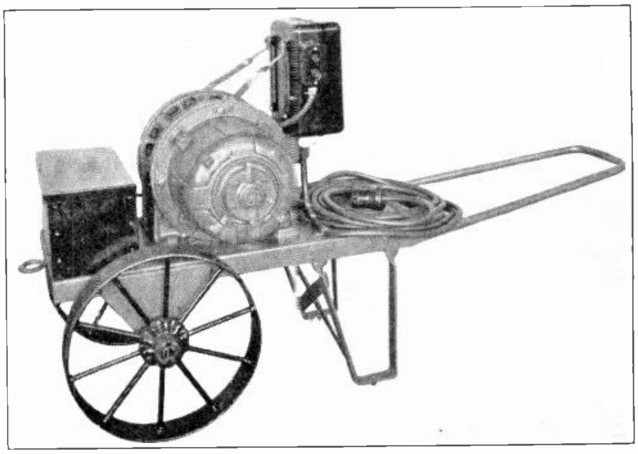

Fig. 210. Portable A.C. induction motor and stator particularly adapted for use on farms and for driving portable machinery. (Courtesy G. E. Company)

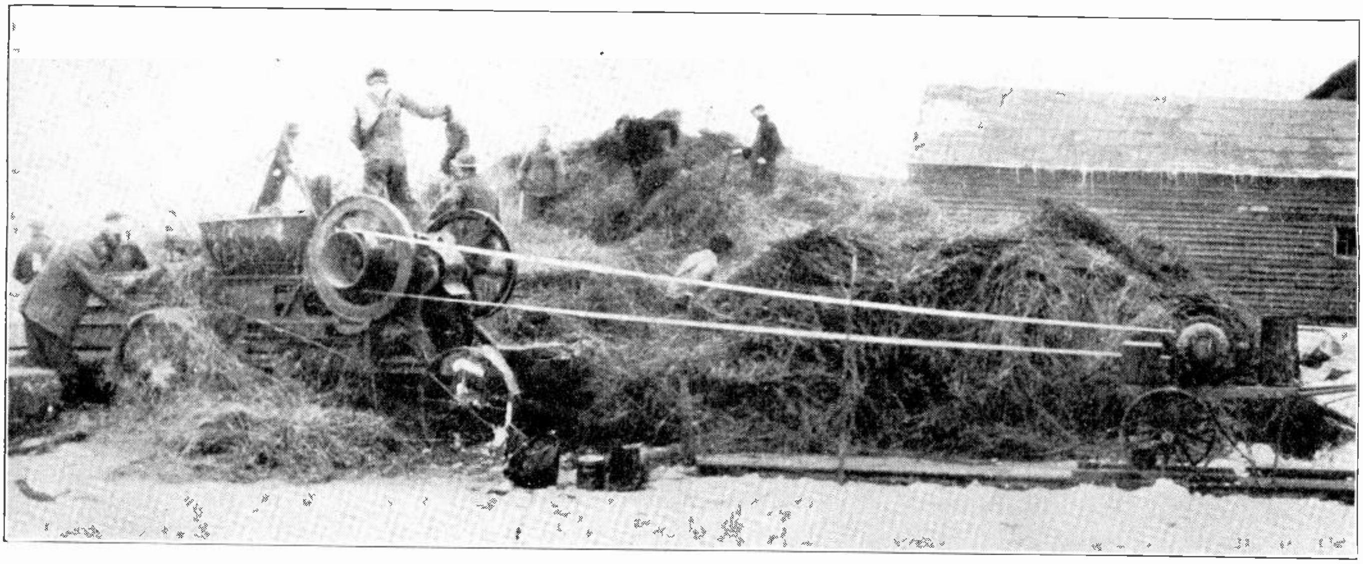

Fig. 211. This photo shows a portable A.C. motor driving a hay baler. Many thousands of farms are making excellent use of electricity to save time and money in many ways, and taking advantage of the increased safety obtained by use of electrical power equipment. (Photo courtesy G. E. Company)

224. ELECTRIC MOTORS FOR USE ON SHIPS

Electric motors are also used extensively in ships of all classes. Battle ships are using enormous electric motors for driving their propellers, and also numerous small motors for handling equipment aboard the ship. Merchant marine ships use numerous electrical motors for operating cranes, derricks, hoists, elevators, and conveyers in handling materials when loading and unloading the ship.

Many of the smaller and medium sized motors for deck use on ships are enclosed in special air and water-tight casings, to exclude all salt water and vapor.

Electrical dredges use powerful electric motors to operate soil and rock cutting tools as well as the enormous suction pumps with which these dredges are equipped.

Modern passenger liners may have as many as several hundred medium and large sized electrical motors, in addition to the numerous small ones which are used for fans and convenience devices.

Two of the large ships in the U. S. navy are each equipped with eight motors of 22,500 h. p. each, which are used for propeller drives.

So we find electric motors are the principal source of mechanical power in practically all classes of industry and even on the farms and ocean-going ships.

POWER-FACTOR CORRECTION

Throughout the first section on A. C. and in a number of places in this section on A. C. motors, we have mentioned the desirability of maintaining good power factor on alternating-current systems.

We have also found that induction motors operate at lagging power factor even when fully loaded, and that they are particularly detrimental to the power factor when they are allowed to operate lightly loaded.

Some of the disadvantages of low power factor are as follows: It causes wattless currents to flow through the feeder lines and alternator windings, thereby requiring larger alternators, transformers, lines, switches and fuses, or causing overheating of those already in use. Low power factor causes increased voltage drop and poor voltage regulation on the lines and systems in which it exists. This voltage drop may result in low voltage at the terminals of motors and other equipment and cause them to develop very poor starting torque.

So we find that low power factor makes necessary the use of expensive voltage-regulating equipment, larger alternators and transformers, larger conductors in the lines and feeder circuits, and increased size of motors to perform a given amount of mechanical work.

In addition to these things, low power factor is often the cause of increased power bills because some power companies have in their power contracts a penalty clause on low power factor.

We have learned that lagging power factor can be neutralized and the power factor of a system improved by the use of synchronous motors or static condensers, which operate at leading power factors and supply leading currents which neutralize the lagging currents of inductive equipment.

225. USE OF SYNCHRONOUS MOTORS AS CONDENSERS

Synchronous motors operating with over-excited fields and used as **synchronous condensers** are very commonly installed for correcting the power factor in industrial plants and on the lines of power companies.

Synchronous condensers are generally used for power-factor correction where more than 500 kv-a. of corrective energy is to be handled, and they are also commonly used in sizes down to 50 kv-a.

In industrial plants where a large number of A. C. induction motors are in use, it is often advisable and economical to replace some of these with synchronous motors to drive certain machinery or equipment which is suited to the characteristics of synchronous motors.

In this manner the synchronous motors can be used to furnish mechanical power and also to correct power factor. In other cases, medium or large sized synchronous motors are connected to the lines or system wiring without any mechanical load and allowed to float on the system just for power-factor corrective purposes. They are then known as **synchronous condensers.**

Sometimes an idle A. C. generator can be used in this manner and allowed to run idle on the A. C. lines with its field strongly excited. This improves the power factor on the system and will often greatly reduce the amount of wattless current flowing in the lines and required from the other alternators which feed the system.

Synchronous condensers have the advantage of being of lower first cost than static condensers and also of being much smaller in size for a given kv-a. capacity on the larger units. They also possess the advantage of affording easy adjustment of the power factor by regulation of their field excitation, and their operating characteristics tend to maintain good voltage regulation on the circuits to which they are attached.

The disadvantages of synchronous condensers are that they have somewhat higher losses and require more care and maintenance than static condensers. Synchronous condensers are commonly installed where the power factor of a large system can be corrected from one central point.

Fig. 212 shows a synchronous condenser of 5000 kv-a. capacity, for 2300-volt operation. This machine is enclosed in an air-tight casing and is cooled by clean, dry, ventilating air which is forced through this casing from openings in the bottom

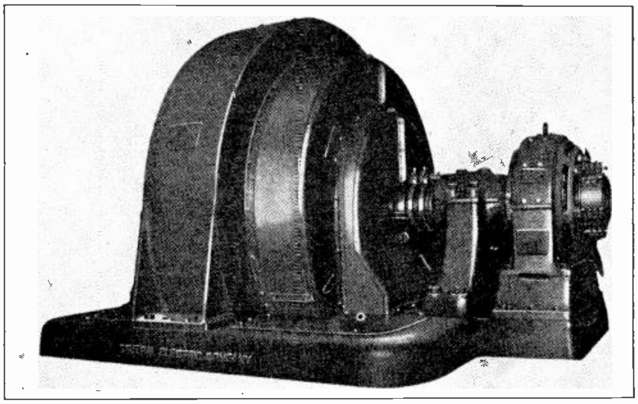

Fig. 212. 5000-kv-a., 2300-volt, enclosed-type, synchronous condenser. The exciter for this machine is shown on the right. (Photo courtesy G. E. Company)

of the frame. The exciter-generator shown is mounted on a separate base on the end of the main condenser base and is driven by the end of the main shaft.

226. STATIC CONDENSERS

The use of static condensers for power-factor correction has become quite general during the last few years. These devices have the advantage of being simple to install and of requiring practically no care or maintenance, as they have no moving or wearing parts.

They are of somewhat higher first cost and have the additional disadvantage of not being adjustable except by changing the number of condenser units which are connected to the system.

Static condensers can be used in large banks or groups to correct the power factor of the entire system, by connecting them at the switchboard or transformer bank where the power enters the plant or buildings. Small condensers can be used to correct the power factor of individual induction motors by connecting them directly to terminals of these motors and locating the condenser within a few feet of the motor itself.

Fig. 213 shows a 300 kv-a. static condenser for operation on 2500 volts. This unit consists of a number of small condensers located in racks and properly connected across the three phases of the line. These condensers can be seen mounted in three banks in the three levels of the frame. The oil switch mounted on the front of the unit is for disconnecting the condenser from the system whenever necessary.

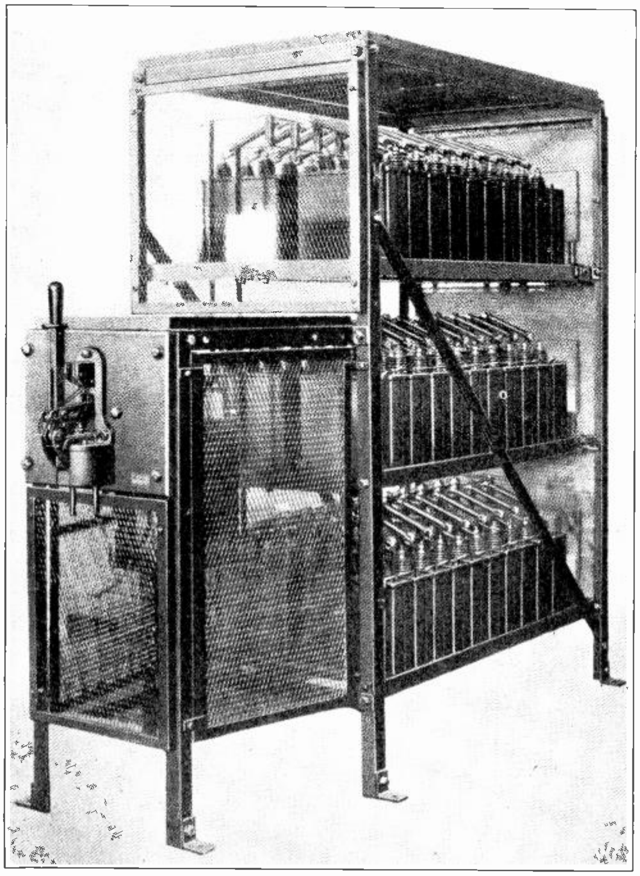

Fig. 213. 300-kv-a., three-phase, 2500-volt, capacitor or static condenser, used for improving power factor. (Courtesy General Electric Co.

Fig. 214 shows a pair of condenser units, or **capacitor** units as they are often called. These units are equipped with resistors of the cartridge type for discharging them when they are disconnected from the line. If it were not for these resistors shunted across the condensers the condenser units would hold a charge of high voltage for a considerable period after being disconnected, and this would make them dangerous for an operator to work on.

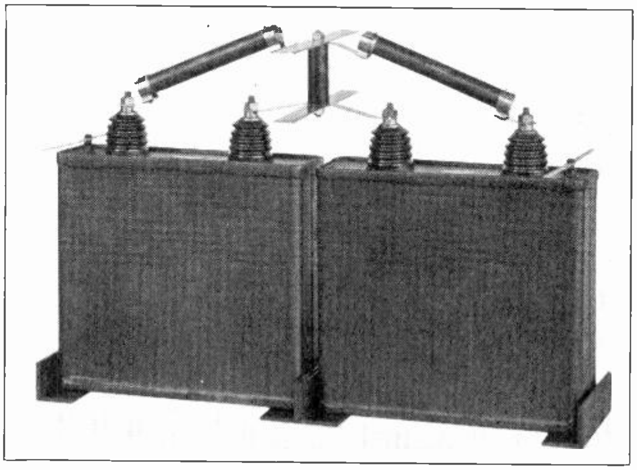

Fig. 214. Two single-phase condenser units connected together with discharge resistors in their circuit. (Courtesy G. E. Company)

It is also advisable to short-circuit any condenser with a piece of insulated wire, to make sure that it is discharged before working on it.

The resistance units are of high enough resistance so that they do not appreciably short-circuit the condensers or cause any considerable loss during operation. When the condensers are disconnected from the line, however, it requires only a few seconds for the energy stored in them to discharge through the resistance units.

227. CONSTRUCTION OF STATIC CONDENSERS

You are already quite familiar with the construction of condensers and have learned that they consist primarily of thin conducting plates of metal foil, separated by sheets of insulation or dielectric of the proper thickness and quality to stand the voltage at which the condenser is designed to operate.

These alternate sheets of metal and insulation can be arranged either in a flat stack with every other metal plate connected to opposite terminals, or in a roll with a good many square feet of each material rolled into one compact unit and these long metal strips then connected in parallel to the terminals.

Fig. 215 shows two views of roll-type condenser units in which the strips of metal foil are rolled between strips of insulating paper. Note the terminals which are brought out on the ends of these units for connecting a number of them in series or parallel to obtain the proper voltage and capacity rating of the condenser.

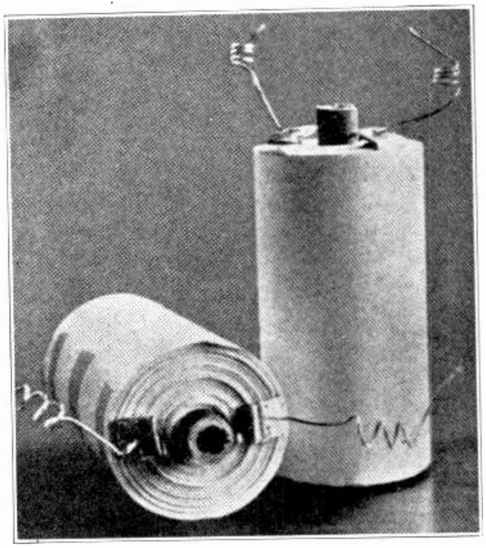

Fig. 215. Roll-type condenser units in which the long strips of metal foil and insulating paper are rolled into one compact condenser element. (Courtesy Electric Machinery Mfg. Co.)

Fig. 216 shows a number of these roll-type condensers mounted in one tank or case and connected three-phase to the terminals in the box on the front of the tank.

The condenser tanks are generally filled with insulating oil or compound to add insulating strength and also to keep out all moisture and thereby preserve the quality of the insulation of the units.

Fig. 217 shows a complete condenser unit with an oil switch mounted on the front of the tank for making and breaking the connections between the condenser and line.

Condensers which are enclosed in water-proof tanks such as shown in Figs. 215 and 216 can be used either indoors or outdoors, and in some cases they are mounted on poles or platforms with the outdoor transformers.

228. OPERATION OF STATIC CONDENSERS

You have already learned that when a difference of potential is applied to the terminals of two parallel conducting surfaces which are located close together but insulated from each other, they will absorb or store up an electro-static charge. When the applied voltage is removed and the condenser short-circuited, this static energy will discharge in the form of dynamic current.

When alternating current is applied to a condenser it charges the unit during the period of the alternation when the voltage is increasing from zero to maximum, and allows the condenser to discharge back into the line when the voltage starts to fall from maximum to zero.

The current thus supplied by the condenser leads the applied line-voltage by approximately 90° and thereby neutralizes the effect of lagging currents in the circuit.

When a condenser is connected to terminals of an induction motor as shown in Fig. 218, the condenser supplies wattless current or magnetizing current to the motor so that this lagging current doesn't flow through the line from the transformers or alternators to the motor.

The opposite characteristics of the induction motor and the static condenser cause a continual circulation or interchange of current between the two during operation. By preventing this flow of wattless current through the lines, the static condenser reduces the voltage drop in the line and in many cases makes possible the use of smaller line or feeder conductors to the motor. It also reduces the amount of wattless current carried by the alternator windings.

229. LOCATION OF CONDENSERS

When the motors are of medium or large size it is often desirable to correct the lagging power

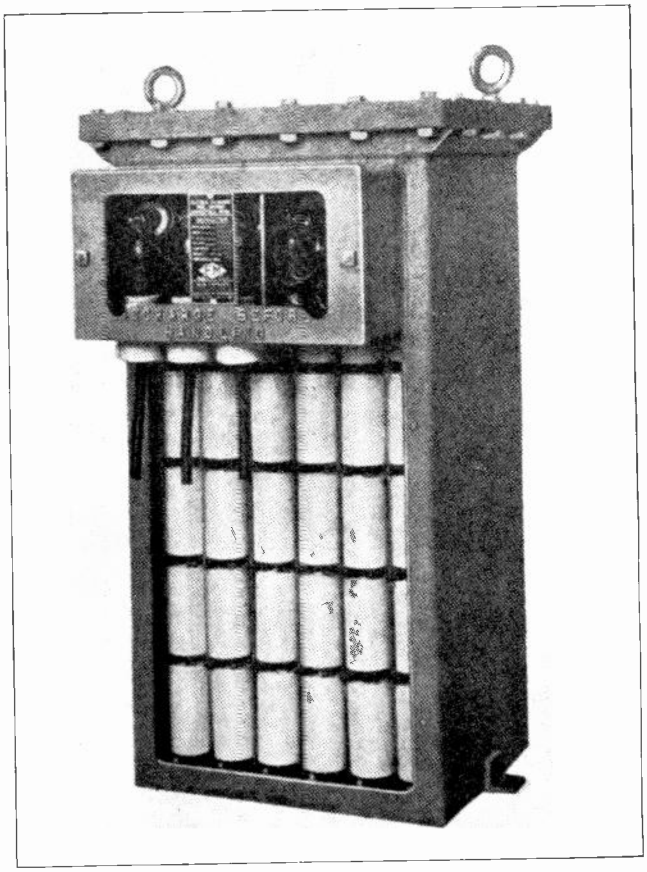

Fig. 216. Complete static condenser with side of tank cut away to show arrangement of roll-type condenser units. (Courtesy Electric Machinery Mfg. Co.)

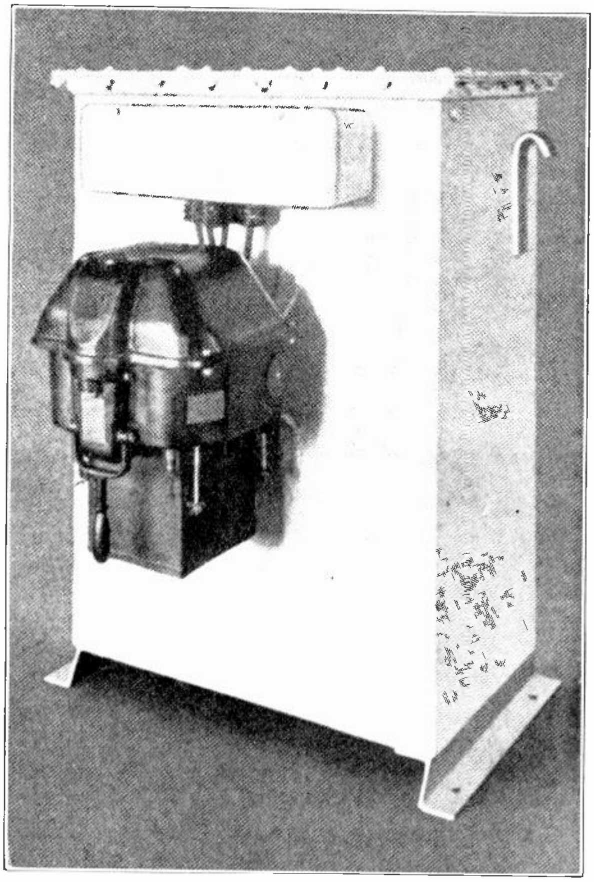

Fig. 217. This photo shows a static condenser enclosed in a moisture-proof metal tank and equipped with an oil switch for breaking the circuit between the condenser and the line. These condensers are made for both indoor and outdoor service. (Courtesy Electric Machinery Mfg. Co.)

factor right at its source by connecting small condensers to the motor terminals. This prevents the flow of wattless current or magnetizing current through the feeders in the plant and through the power line and alternators. In other cases, where this is not convenient and there are a number of small or medium-sized motors connected to the wiring system in a plant, it may be better to attach a large condenser or bank of condensers to the line or feeders at a point as near to the load center as possible.

In many cases the condensers are connected to the secondaries of the transformers which step down the voltage of the alternating current where the power enters the plant or building.

This relieves the transformers, power lines, and alternators at the generating plant from carrying the wattless current, but it doesn't remove this wattless current from the feeders and circuit within the plant where the low power factor exists.

Correcting the power factor in this manner may be satisfactory to the power company and relieve the customer of the penalty charge for low power factor, but it doesn't eliminate the voltage drop and losses which occur in the feeders and circuits of the customer's plant, nor the reduced efficiency of motors and equipment which may result from this voltage drop.

For this reason it is more desirable to correct the low power factor right at its source by using condensers at the terminals of individual large motors whenever practical. Where it is not possible or practical to locate condensers at the terminals of large motors or where a large number of small motors are used, it is often more practical to install one large condenser as near as possible to the center of the load, so that it will correct the power factor for a group of small motors and supply the magnetizing current to these machines through the shortest possible length of the feeder wires.

Fig. 219 shows three large motors, each equipped with an individual static condenser connected directly to its terminals and also a number of small motors with one condenser, "D", located approximately at the center of the small motor load. The condensers, A, B, and C, confine the flow of wattless current for the large motors to the short wires between the motors and condensers, and if these condensers are of the proper size, none of the

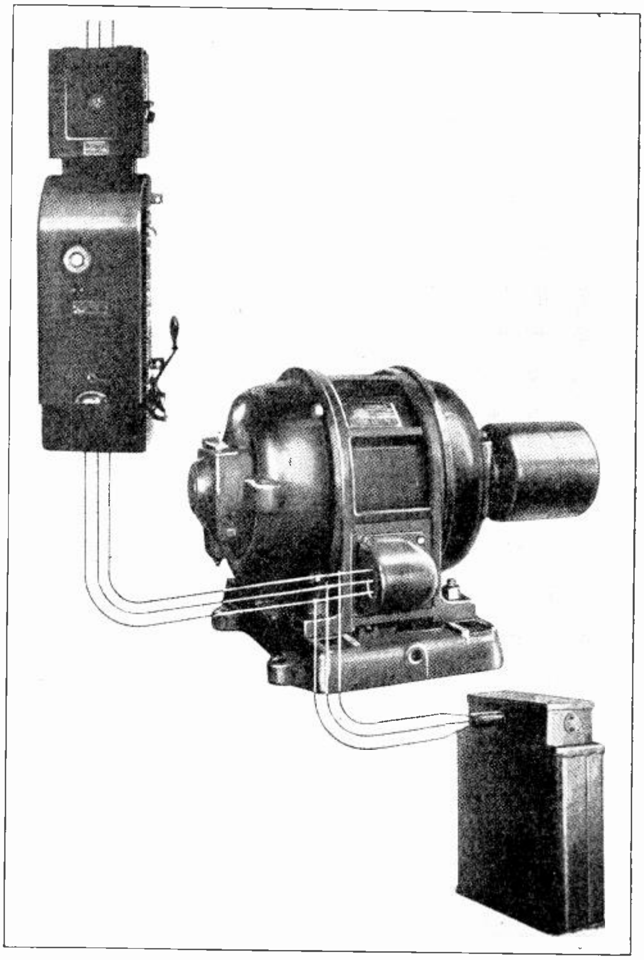

Fig. 218. Static condensers can be connected direct to the terminals of individual induction motors as illustrated in the above view. The condenser then supplies the magnetizing current to the motor and corrects the lagging power factor at its source. (Courtesy G. E. Company)

magnetizing current for these machines will flow through the main feeder wires.

If condenser D is of the proper size to supply the magnetizing or wattless current for all of the small motors, then this wattless current will only flow through a very short section of the main feeders and in this manner will be prevented from causing voltage drop in the longer feeder lines.

Keep in mind, in the case of condenser D, that the wattless current for each of the small motors located near this condenser will only flow between the motors and the condenser.

If, for any reason, it were not desirable to use the small condensers A, B, C, and D distributed throughout this power wiring system, a large condenser could be located at "X", as shown by the dotted lines. While this would not remove the wattless current from the feeders throughout the plant, it would prevent the transformers, power line, and alternator from being overloaded by the wattless current.

In some cases synchronous condensers are used right at the power plant for the sole purpose of relieving the alternators of wattless current. Sometimes an idle alternator can best be used as a synchronous condenser just floating on the busses to supply magnetizing current, instead of using up steam to drive this alternator to make it carry its share of the total effective current and magnetizing current.

230. POWER FACTOR CORRECTION BY PROPER LOADING AND PROPER SELECTION OF MOTORS

Before installing any power factor corrective equipment, such as synchronous or static condensers, it is generally best to do everything possible to improve the power factor by changing or rearranging the existing motors.

Very often it will be found that oversize induction motors have been chosen to drive certain machines which require the starting torque of a large induction motor; but which, after they are running, keep this motor loaded at only one-fourth to one-half of its rating.

In such cases it would be better to replace these squirrel-cage induction motors if possible with slip-ring motors or special squirrel-cage motors with better starting torque, so that motors of the proper size can be used and then operated at approximately full load during running.

In many instances it is possible to change motors around so that they are better fitted for the power requirment of the machines they drive, and in such cases it may not be necessary to discard or replace more than a few motors.

In a plant which is largely operated by squirrel-cage induction motors and is known to have a very low power factor, great care should be used in selecting additional motors whenever new equipment is added.

If synchronous motors are used to drive as much as possible of the new equipment or if synchronous motors are installed to drive some of the old equipment which may be better fitted to their characteristics, this will release induction motors from the old equipment to drive the new machines.

On any equipment that cannot be satisfactorily operated by ordinary synchronous motors, it will probably be possible to use special high-torque synchronous motors, or at least to use slip-ring motors in order to get the necessary starting torque with the best possible efficiency and power factor.

When inspecting or changing old motors, or installing new ones in any plant where you may be employed, always keep in mind the great savings which can be effected by the proper selection and proper loading of A. C. motors.

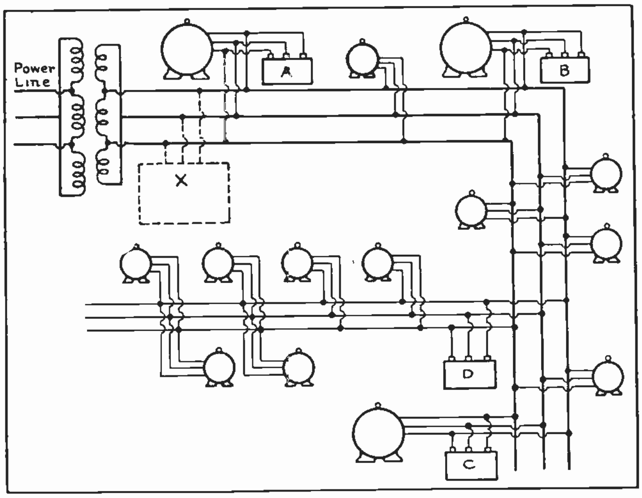

Fig. 219. This diagram illustrates the manner in which condensers can be connected to individual large motors and also at load centers to correct the power factor for a group of small motors.

231. SELECTION OF POWER FACTOR CORRECTIVE EQUIPMENT

When everything possible has been done in this manner, the power factor may still be too low and may be causing serious overloading of existing feeders and circuits and excessive voltage drop at the motors and equipment to be operated. It may also be causing a penalty charge on the power bill or overloading of transformers and alternators in case the company generates its own power. If this is the case then some other means of power factor correction should be considered.

The equipment used for this purpose should not be installed by guess work just because it is known that it will improve the power factor. Instead the entire system should be carefully gone over and tested to determine what the power factor actually is and what the extent of the load is on the alternators, transformers, and feeders in proportion to their capacity.

In many cases it is also advisable to check the power factor on different main branches of the system and the voltage drop at the terminals of equipment in different parts of the plant.

If the power is being purchased, the power bills should also be carefully checked to see how much can be saved by improving the power factor. In this manner the power factor corrective equipment can be intelligently selected to give results where they are most needed and to effect the greatest possible saving.

In determining the type of corrective equipment to use or in choosing between synchronous motors, synchronous condensers, static condensers, further care should be exercised.

If there are in the plant a number of machines or devices which are well suited to synchronous motor drive, and if there is some other use for the induction motors which will be replaced; or if these machines can be profitably sold or are old enough to be discarded, then synchronous motors of the proper size for driving the machinery and also correcting the power factor are generally a wise choice.

If the plant in which the power factor is to be corrected is a large one and has several centers of heavy load at low power factor, the installation of synchronous condensers at these load centers is often advisable.

Before choosing synchronous condensers, however, we should keep in mind that they require the same amount of skilled attention and maintenance that synchronous motors require.

If the plant is of small or medium size and if the motors and loads are widely scattered at the ends of long feeders and circuits, the installation of static condensers properly located throughout the plant may be most economical.

In numerous cases where alternators, transformers, and feeders may be overloaded to the point where it is necessary to replace them with larger ones or to add new ones to operate in parallel, it may be found that a considerable portion of this load is wattless current.

If correcting the power factor will relieve this condition and enable the existing equipment to be used for several years more, it is generally much cheaper to buy power-factor-corrective equipment and save the cost of the new generators and transformers.

Considerable copper cost can also be saved where the feeders or lines are of considerable length.

In some cases where the power is purchased and even though the power contract may not contain a penalty clause for low power factor, it may be possible to obtain a lower power rating or a rebate on the power bills by going to the power company with a definite proposal for improving the power factor of the customer's load to a certain amount.

232. DETERMINING THE PROPER SIZE OF CONDENSER REQUIRED

It is a very simple matter to calculate the actual amount of saving that can be effected by correcting power factor a certain amount, and also to calculate the size of the synchronous condenser or static condenser which will be required to correct the power factor the desired amount.

To determine the proper size of the condenser or the amount of corrective kv-a. required, it is first necessary to note the amount of actual load in kw. and the power factor of this load.

The next step is to decide to what new and higher value the power factor of the load should be raised. Generally it is not economical or practical to try to raise the power factor to unity or 100%, because the closer to unity the power factor is raised the greater will be the amount of corrective kv-a. required to increase the power factor any additional amount. So we reach a point where the very great cost of corrective equipment overbalances the saving and benefits derived from correction.

Furthermore, this unity power factor is not desirable on some systems, because a very small change in the load or power factor when the system is already at unity power factor, results in a considerable change in the current and tends to make the system unstable.

For these reasons a desirable power factor is usually somewhere between 85 and 95 per cent. When the load in kw. and the power factor of the plant or system are known, it is easy to calculate the apparent power in kv-a. and also the **wattless energy** or **reactive-kv-a.** This latter is often called the wattless **component**, meaning the wattless portion or part of the energy.

233. PRACTICAL FIELD PROBLEMS

For example, suppose we are considering an industrial plant in which the actual power load is 1440 kw. and we find that the power factor of this load is 60%. This power factor can be determined by tests with voltmeter, ammeter, and wattmeter, or with a power-factor indicator, as explained in an earlier section.

We shall assume that we desire to increase this power factor to 90%. Our first step is to find the kv-a. at the present power factor. This will be:

$$1440 \div .60, \text{ or } 2400 \text{ kv-a.}$$

Now, to find the wattless component or reactive kv-a., we **square both the actual power and the apparent power and then obtain the square root of the difference between these figures.**

This can be stated in the following simple formula:

$$\text{Reactive kv-a.} = \sqrt{\text{kv-a.}^2 - \text{kw.}^2}$$

In the case of the problem we are considering, the reactive kv-a. will be:

$$\sqrt{2400^2 - 1440^2}, \text{ or } 1920 \text{ kv-a.}$$

This is the wattless power at 60% power factor.

The next step is to find what the wattless component will be at 90% power factor. This is found in the same manner as we have used for the 60% power-factor condition.

At 90% power factor, the apparent power of the system will be 1440 ÷ .90, or 1600 kv-a.

Note the great reduction in the apparent power which is required to produce the same amount of actual power at the higher power factor. While at 60% power factor it required 2400 kv-a. to produce 1440 kw., at 90% power factor it requires only 1600 kv-a. to produce 1440 kw.

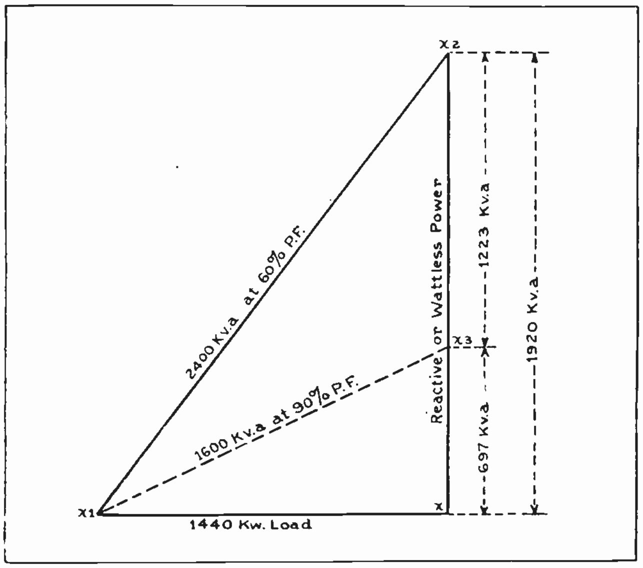

Fig. 220. The above sketch shows the simple method by which power factor problems can be solved graphically by drawing to scale the lines representing the various factors in the problem. Study this diagram very thoroughly with the accompanying explanations.

As we know that the current is proportional to the volt-amperes divided by volts, we can immediately see that the increased power factor will greatly reduce the current flowing in the circuits.

We can now determine what the wattless power or reactive kv-a. will be at the new power factor. This is found by the same formula as previously given, and, in this case, the reactive kv-a. equals:

$$\sqrt{1600^2 - 1440^2}, \text{ or } 697 \text{ kv-a.}$$

If the reactive kv-a., or wattless power, was 1920 at 60% power factor and is now only 697 at 90% power factor, then the difference between these two will be the reactive kv-a. required to increase the power factor from 60 to 90 per cent., or 1920 — 697 = 1223 kv-a.; which will be the capacity of the condenser required to correct the power factor this amount.

In other words, the condenser will have to have a capacity of 1223 kv-a. at unity power factor.

This problem is further illustrated by the diagram in Fig. 220. The horizontal line forming the base of the triangle represents the 1440 kw. of actual power or load. This line is drawn to a scale of ⅛ of an inch per 100 kw.

The vertical line forming the adjacent side of the triangle represents the wattless or reactive kv-a. This line is drawn to the same scale and its full length represents the 1930 kv-a. of wattless power at 60% power factor. The lower section from X to X-3 represents the 697 kv-a. of wattless energy at 90% power factor.

The difference between these two, or the upper section of the line from X-3 to X-2, represents the 1223 kv-a. which will have to be neutralized by an equal amount of leading kv-a. from the condenser.

The long diagonal line from X-1 to X-2, or the hypotenuse of this large triangle, represents the 2400 kv-a. of apparent power at 60% power factor. The lower diagonal line drawn from the point of 697 kv-a. on the reactive power line to the point of the angle represents the 1600 kv-a. apparent power which will be required at 90% power factor.

234. GRAPHIC SOLUTION OF POWER FACTOR PROBLEMS

This same problem can be solved approximately with very few figures by laying out lines carefully measured to the proper length to represent the various values to scale.

For example, let us take a sheet of paper with square corners and, starting at the lower right-hand corner of the sheet as at "X" in Fig. 220, we shall first lay out to the left along the lowest edge of the sheet a line which is the proper length to represent the load in kw. Any suitable scale, such as ⅛, ¼, or ½ inch, can be used to represent 10, 50, or 100 kw., according to the amount of load and the size of the paper available. The larger the scale used, the more accurate the measurements can be made.

If we next determine the apparent power by dividing the kw. load by the known power factor of the system, we can then lay out a line of the proper length to represent this apparent power in kv-a. on the same scale as that used for the base line representing the load in kw.

If we lay out a line of this length on the edge of the ruler or straight strip of paper, and then lay this line from the left end of the kw. line, or X-1, and so that the opposite end of the line falls at the right edge of the sheet of paper at X-2, we can then measure the distance along the edge of the paper from X to X-2, and thus find the wattless or reactive kv-a. for this load and power factor, by measuring this distance on the same scale as we used for both of the other values.

Then if we develop another line to represent the kv-a. of apparent power at 90% power factor and lay this line from X-1 to the edge of the paper at X-3, we can measure from X-3 to X and obtain the approximate reactive kv-a. at the improved power factor.

235. SAVING EFFECTED BY POWER FACTOR IMPROVEMENT

In the problem we have just considered, we find that increasing the power factor from 60 to 90 per cent. reduces the apparent power from 2400 to 1600 kv-a. This is a reduction of 800 kv-a. or, in other words, the alternators, lines, and transformers can supply the same actual power with a reduction of 800 kv-a. load on their windings.

If the greater part of this energy is fed throughout the customer's plant at 440 volts, this will mean considerable reduction of the current load on the feeders.

This can be determined as follows:

volt-amperes ÷ (E × 1.732)

or

800,000 ÷ (440 × 1.732) = 1049 amperes

Increasing the power factor will also reduce the current load by the same amount in the 440-volt secondaries of the transformers at the customer's premises.

If this energy is supplied to the primaries of the transformers by a 2300-volt distribution line from the power company's substation, the current on this line and primary winding of the transformers will be approximately 200 amperes less.

Of course, the actual reduction in current will not be quite this great if a synchronous motor is used for the power factor correction, because this machine will require a small amount of energy current to overcome the friction and windage-loss of the machine. This amount, however, is so small that it is hardly worth considering.

In case a static condenser is used for power-factor correction in this problem, the loss will also be extremely small; as the loss of this device is generally less than ½ of 1%.

The method used to calculate the capacity of either a synchronous condenser or static condenser is the same, as long as the synchronous condenser is used only for power factor correction and not to drive any mechanical load.

To see the great importance of having a proper knowledge of power factor and its correction, we need only to note the amount of saving that can be effected by power factor improvement in the problem we have just considered.

The great reduction made in the current load on the transformers, lines, and alternators would enable a plant to avoid the installation of new transformers and alternators, and take care of expansion and growth for possibly several years longer, by this correction of power factor.

Considering it from the standpoint of monthly power bills in case the power is purchased from a generating company, the saving is also considerable.

For example, if the 1440 kw. load which was used in this problem is taken to be the voltage load throughout an eight-hour day in the plant of the customer, the total power consumed in one month of 26 working days would be 299,520 kw. hours.

At a cost of approximately 1 cent per kw. hour, the monthly power bill would be $2,995.20. If the power company from whom this energy is purchased has a power-factor-rate clause in the contract, it is possible that the reduction in the rate between the 60% and 90% power factor conditions would be as much as 10% of the power bills.

This would result in a monthly saving of $299.52, or a yearly saving of $3,594.24. So we find that this would soon pay for the cost of a 1223 kv-a. synchronous condenser at approximately $6,000.00.

236. PROBLEM

As another illustration, suppose you are working as maintenance electrician in an electrical plant where the total load of induction motors, welders, and electrical ovens amounts to 560 kw. Let us assume that this is the normal true-power load shown by the wattmeter under average operating conditions in the plant.

If this energy is fed to the motors and equipment at 440 volts and a total of the ammeter readings on the different feeder circuits shows the current load to be approximately 1130 amperes, then the apparent power is equal to 440 × 1130 × 1.732, or approximately 861 kv-a.

Then, to determine the power factor of the system, we divide the true power by the apparent power, or 560 ÷ 861 = approximately 65% power factor.

We shall assume that you wish to raise this power factor to 90%. The present load in kw. can again be represented by the horizontal base line of the triangle in Fig. 221.

In this figure a scale of ½ inch to 100 kw. is used. Now, assuming that the vertical line is the right-hand edge of a square sheet of paper and that the base line is on the lower edge of this same sheet of paper, we will lay out a line to the scale of ½ inch per 100 kv-a. and of the proper length to represent the 861 kv-a. of apparent power.

Running this line from the point X-1 at the left end of the kw. line to X-2 at the right edge of the paper, we have represented the apparent power by the hypotenuse of the triangle.

Now, if you measure the line from X-2 to X-3, you will find it is slightly over 3¼ inches long and, on the basis of ½ inch per 100 kv-a., this will equal approximately 654 kv-a. of wattless, or reactive, power. This we have marked "R kv-a.".

Now, to find the amount of reactive kv-a. or wattless power which we will have when the power factor is improved to 90%, we must first determine the total kv-a. of apparent power at 90% power factor.

True power ÷ power factor = apparent power, so,

560 ÷ .90 = approximately 622 kv-a. apparent power at 90% p. f.

Using the scale of ½ inch per hundred kv-a., we shall represent the 622 kv-a. with a line slightly under 3⅛ inches long. Marking off this line on the edge of a ruler or straight piece of paper, set one end of the line at X-1, and swing the other end over to the point where it touches the right edge of the paper, or line X-2 to X-3. We find that the end of the line meets the vertical line at X-4.

Now measuring the portion of the vertical line from X-4 to X-3, we find that it represents approximately 271 reactive kv-a. according to the same scale of ½ inch per 100 kv-a.

Now, to determine the amount of corrective kv-a. required, we subtract 271 from 654 and find 383 R kv-a., which is the amount to be corrected and which will be the required capacity of the synchronous or static condenser to use for this job.

We can now check these figures by the more accurate method, using the formula:

$$\text{R kv-a.} = \sqrt{\text{kv-a.}^2 - \text{kw.}^2}$$

with which we obtained the values in the previous problem.

In the first condition, with 65% power factor and 861 kv-a., the total reactive kv-a. or wattless power will be:

$$\sqrt{861^2 - 560^2}, \text{ or } 654$$

$$861^2 = 741{,}321$$

$$560^2 = 313{,}600$$

$$\text{and } 741{,}321 - 313{,}600 = 427{,}721.$$

The square root of 427,721 is 654; so we find that the value of the reactive kv-a. shown by the vertical line from X-2 to X-3 is correct.

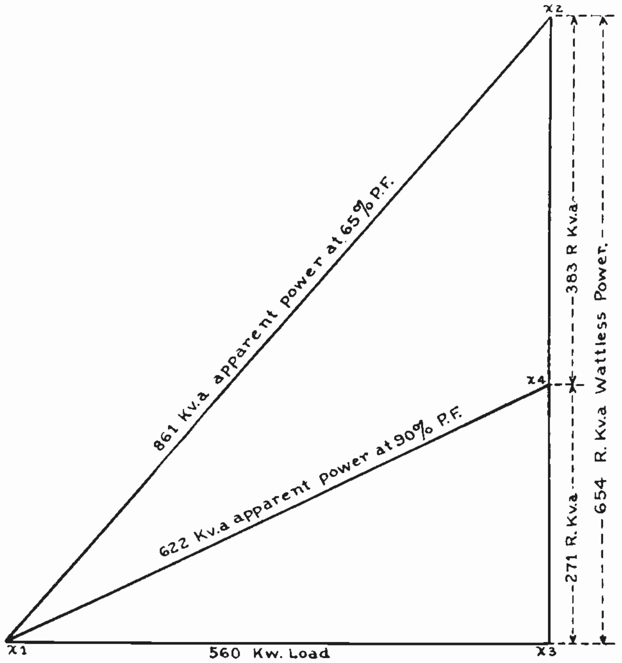

Fig. 121. This diagram also shows the reduction obtained in the apparent power and wattless power by improving the power factor of a system. By carefully measuring the top section of the vertical line in the diagram we can find the size of the condenser required to correct the power factor.

We shall next find the reactive kv-a. at 90% power factor; which will be:

$$\sqrt{622^2 - 560^2}, \text{ or } 271 \text{ R kv-a.}$$

$$622^2 = 386{,}884$$

$$560^2 = 313{,}600$$

$$386{,}884 - 313{,}600 = 73{,}284$$

The square root of 73,284 is approximately 271, which proves that the value of the reactive kv-a. shown by the vertical portion of the line from X-4 to X-3 is also correct.

With just a little practice to get the steps of these power factor problems well in mind, you will find it very simple to determine the size of condenser required for correcting the power factor of any given load at low power factor and to bring it up to the desired higher power factor.

It will be well worth your time to practice both the approximate method with the triangle diagram and also the accurate method using the formula.

By improving the power factor from 65% to 90% in the plant we have considered in this last problem, we shall have reduced the apparent power from 861 to 622 kv-a. or by 239 kv-a. This means that the alternators, transformers, and feeders will be relieved of this amount of load. On the 440-volt feeders this will amount to approximately 314 amperes, as can be determined by the following formula:

$$I = \frac{\text{volt-amperes}}{E \times 1.732}$$

or, in this case,

$$I = \frac{239{,}000}{440 \times 1.732}, \text{ or } 314\text{— amperes}$$

You can readily see that relieving the feeder cables of this amount of current would decrease the voltage drop in them considerably—especially if they were already overloaded at the low power factor. Relieving the transformers of this load would enable them to carry an increased load of useful power; and the same thing applies to the alternators of the power company, or the alternator which may be owned and operated by your employer if the plant in which you work generates its own power.

237. USE OF SYNCHRONOUS MOTORS FOR P. F. CORRECTION AND MECHANICAL LOAD

When it is desired to use a synchronous motor both for driving a certain amount of mechanical load and for correcting the power factor of the load already on the system, we must, of course, allow sufficient capacity of the machine for both of these duties. The actual problem or calculation, however, remains very much the same.

Let us assume that in a certain plant there is an existing load of 600 kw. at a power factor of 60%. We wish to improve this power factor of 90% by the use of a synchronous motor and we also wish to operate with this motor a new mechanical load of 300 kw.

We shall represent the existing load by the horizontal line from X to X-1 in Fig. 222, and the additional new mechanical load of 300 kw. by the addition to this line from X-1 to X-2. The scale in this diagram is ¼ inch per 100 kw.

At 60% power factor the apparent power of the existing load will be 600 ÷ .60, or 1000 kv-a.

We shall represent this kv-a. by the same scale of ¼ inch per 100 kv-a. and by a line 2½ inches long, running from X to a point where its opposite end strikes a vertical line which we have drawn up from the base line at X-1.

This hypotenuse line, representing the 1000 kv-a. of apparent power, will strike the vertical line at X-3, and if we measure the line from X-3 to X-1, we find it is two inches long. On the same scale used for the other values, it will therefore represent 800 R kv-a. of reactive or wattless power.

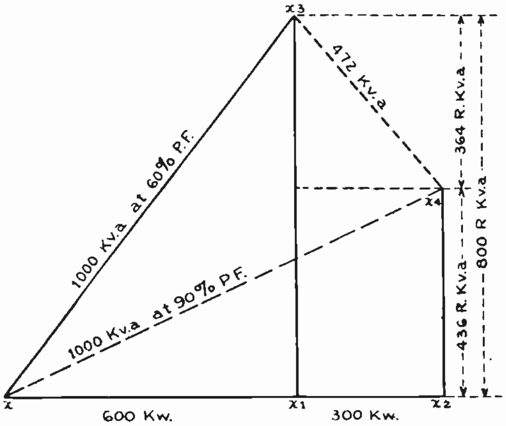

Fig. 222. This diagram shows the graphic solution of a problem in which the synchronous motor is used for mechanical power purposes as well as power factor correction. The figure should be easily understood by referring to the explanations in the accompanying paragraphs.

Checking this calculation by the more accurate method of using the formula:

$$R \text{ kv-a.} = \sqrt{1000^2 - 600^2}$$

we find the answer is exactly 800 kv-a.

The next step will be to determine the kv-a. of apparent power of the existing load plus the new mechanical load at the desired power factor of 90%. The entire load will be 900 kw., and at 90% power factor the kv-a. will be:

900 ÷ .90, or 1000 kv-a.

It is interesting to note at this point that with the improved power factor we can obtain a 50% increase in the true power load with the same kv-a. as existed with the 600 kw. load.

Representing this 1000 kv-a. on the scale of ¼ inch per 100, or by a line 2½ inches long, we shall first run this line from X to the point where it strikes a vertical line above X-2. This vertical line from X-2 to X-4 will represent the reactive kv-a., or wattless component, for the entire load of 900 kw.

Measuring this line to scale, we find that it represents approximately 436 reactive kv-a.

We shall now check this figure by the more accurate method with the formula:

$$R \text{ kv-a.} = \sqrt{1000^2 - 900^2}, \text{ or } 436\text{— R kv-a.}$$

Subtracting this from the former reactive kv-a., we find 800 — 436 = 364 R kv-a., which must still be corrected to bring the power factor to 90%.

The capacity of the synchronous motor must therefore be:

$$\sqrt{300^2 + 364^2}, \text{ or } 472\text{— kv-a.}$$

This capacity or kv-a. of the synchronous motor can also be found by measuring the distance from X-3 to X-4, as shown by the dotted line in Fig. 222, and using the same scale of ¼ inch per 100 kv-a.

The power factor rating of the synchronous motor, or the power factor at which it will need to operate to carry this mechanical load and also correct the reactive kv-a., will be found by dividing its true power or mechanical load by its total kv-a. rating, or:

300 ÷ 472 = approximately 64% leading power factor.

237-A. TABLE FOR DETERMINING REQUIRED SIZE OF CONDENSERS

The convenient table in Fig. 223 greatly simplifies the method of determining the proper capacity of the synchronous or static condenser to correct the power factor a certain desired amount for any given load.

This table gives figures which can be used as constants to be multiplied by the kw. load to obtain the leading reactive kv-a. required to improve the power factor from one value to another.

For example, if the kw. load, as indicated by the wattmeter in a plant, is 200 kw. at an existing power factor of 65% and we desire to increase the power factor to 90%, we look in the table under the column heading "Original Power Factor" and find 65; then, reading to the right under "Desired Power Factor" in the column for 90%, we find the figure .685.

We now simply multiply this figure by the load in kw., or:

200 × .685 = 137 kv-a. capacity

or the size of condenser required to bring lagging power factor from 65 to 90 per cent.

If, in another case, we have a load of 525 kw. at a power factor of 70% and we wish to increase the power factor to 85%, we find in the middle column under "Original Power Factor", the figure 70. Then, reading to the right in the fourth column under "85% Desired Power Factor", we find the figure .400. Multiplying this figure by our load of 525 kw. gives 210 kv-a. as the required size of the condenser.

ORIGINAL POWER FACTOR %	DESIRED POWER FACTOR 100 %	95 %	90 %	85 %	80 %
20	4.899	4.570	4.415	4.279	4.149
21	4.656	4.327	4 171	4.036	3.906
22	4.433	4.104	3.949	3.813	3.683
23	4.231	3.902	3.747	3.611	3.481
24	4.045	3.716	3.561	3.425	3.295
25	3.873	3.544	3.389	3.253	3.123
26	3.714	3.385	3.229	3.094	2.964
27	3.566	3.238	3.082	2.946	2.816
28	3.429	3.100	2.944	2.809	2.679
29	3.300	2.971	2.816	2.680	2.550
30	3.180	2.851	2.693	2.530	2.420
31	3.067	2.738	2.583	2.447	2.317
32	2.961	2.632	2.476	2.341	2.211
33	2.861	2.532	2 376	2.241	2.111
34	2.766	2.437	2.282	2.146	2.016
35	2.676	2.347	2.192	2.056	1.926
36	2.592	2.263	2.107	1.972	1.842
37	2.511	2.182	2.027	1.891	1.761
38	2.434	2.105	1.950	1.814	1.684
39	2.361	2.032	1.877	1.741	1.611
40	2.291	1.963	1.807	1.671	1.541
41	2.225	1.896	1.740	1.605	1.475
42	2.161	1.832	1.676	1.541	1.410
43	2.100	1.771	1.615	1.480	1.349
44	2.041	1.712	1.557	1.421	1.291
45	1.985	1.656	1.501	1.365	1.235
46	1.930	1.602	1.446	1.310	1.180
47	1.877	1.548	1.392	1.257	1.128
48	1.828	1.499	1.343	1.208	1.077
49	1.779	1.450	1.295	1.159	1.029
50	1.732	1.403	1.248	1.112	.982
51	1.687	1.358	1.202	1.067	.936
52	1.643	1.314	1.158	1.023	.892
53	1.600	1.271	1.116	.980	.850
54	1.559	1.230	1.074	.939	.808
55	1.518	1.189	1.034	.898	.768
56	1.479	1.150	.995	.859	.729
57	1.442	1.113	.957	.822	.691
58	1.405	1.076	.920	.785	.654
59	1.368	1.040	.884	.748	.618
60	1.333	1.004	.849	.713	.583
61	1.299	.970	.815	679	.549
62	1.266	.937	.781	.646	515
63	1.233	.904	748	.613	.482
64	1.201	.872	716	.581	.450
65	1.169	.840	.685	.549	.419
66	1.138	.810	.654	.518	.388
67	1.108	.779	.624	.488	.358
68	1.078	.750	.594	.458	.328
69	1.049	.720	.565	.429	.298
70	1.020	.691	.536	.400	.270
71	.992	.663	.507	.372	.241
72	.964	.635	.480	.344	.214
73	.936	.608	.452	.316	.186
74	.909	.580	.425	.289	.158
75	.882	.553	.398	.262	.132
76	.855	.527	.371	.235	.105
77	.829	.500	.344	.209	.078
78	.802	.474	.318	.182	.052
79	.776	.447	.292	.156	.026
80	.750	.421	.266	.130	
81	.724	.395	.240	.104	
82	.698	.369	.214	.078	
83	.672	.343	.188	.052	
84	.646	.317	.162	.026	
85	.620	.291	.136		
86	.593	.265	.109		
87	.567	.238	.082		
88	.540	.211	.056		
89	.512	.183	.028		
90	.484	.155			
91	.456	.127			
92	.426	.097			
93	.395	.066			
94	.363	.034			
95	.329				
96	.292				
97	.251				
98	.203				
99	.142				
100					

Fig. 22. The above table gives some very convenient figures by which we can simply multiply the kw. load of a plant with lagging power factor in order to obtain the amount of leading kv-a. or condenser capacity required to correct the power factor any desired amount.

238. PROBLEM

Next, suppose that you have an induction motor on which a wattmeter shows 41 kw. input during operation of the motor at its normal load; a voltmeter shows 220 volts at the motor terminals; and an ammeter shows approximately 144 amperes in any one of the three phase leads to the motor. To determine the power factor at which the motor is operating we must first determine the kv-a. input.

Three-phase kv-a. $= I \times E \times 1.732$

or, in this case,

$144 \times 220 \times 1.732 = 54{,}869$, or approximately 54.8 kv-a.

Now, to determine the power factor of the motor, we can divide the true power input by the apparent power, or:

$41 \div 54.8 = .73$— power factor.

Let us say that we wish to raise the power factor of this motor to 95%. Then, from the table in Fig. 223 we select the power factor of the motor, or 73, found in the middle column under "Original Power Factor"; then, in the column under "95% Desired Power Factor", we find the corresponding figure, .608.

To determine the size of static condenser required to make this power factor improvement on the motor, we simply multiply .608 by the kw. input of the motor, or 41; and this gives 24.9 kv-a. for the condenser. Connecting a condenser of this size to the motor terminals doesn't actually improve the power factor of the motor within the motor itself, but it does bring the power factor of the two units in parallel to 95% on the feeder to which they are connected.

239. CONDENSER TABLE

Fig. 224 shows another convenient table which gives the approximate sizes of condensers required for use with squirrel-cage induction motors to bring their power factors up to either 90% or 95%, as may be desired.

Of course, the power factors of various types of squirrel-cage motors vary considerably; so these figures are necessarily only approximate. They are usually close enough, however, for the selection of condensers to use with motors that normally operate at loads between 50% and 100% of their full-load rating.

This table gives the condenser sizes for motors from ½ h.p. to 200 h.p. at various speeds, and at both the ordinary low and high voltages. Referring to this table, we find that to increase the power factor of a 30-h.p., 440-volt motor to 90% we require a three kv-a. condenser, and that it will require a 5-kv-a. condenser to bring this power factor up to 95%.

Capacitor Kv-A. for Squirrel-Cage Induction Motors

(To correct to .95 or .90 at one-half load)

MOTOR H. P.	Volts	Capacitor Kv-A. for Desired Power Factor .95	.90
1800 R. P. M.			
½	Low	½	½
¾	Low	½	½
1	Low	½	½
1½	Low	¾	½
2	Low	¾	½
3	Low	1	¾
5	Low	1½	1
7½	Low	2	1½
10	Low	2	1½
15	Low	3	2
20	Low	4	2
25	Low	4	3
25	2200	4	3
30	Low	5	3
30	2200	7½	4
40	Low	7½	4
40	2200	7½	4
50	Low	7½	5
50	2200	7½	5
60	Low	7½	5
60	2200	10	7½
75	Low	10	5
75	2200	10	7½
1200 R. P. M.			
½	Low	½	½
¾	Low	½	½
1	Low	½	½
1½	Low	¾	¾
2	Low	1	¾
3	Low	1½	1
5	Low	2	1½
7½	Low	3	1½
10	Low	3	2
15	Low	4	3
20	Low	5	4
25	Low	7½	5
25	2200	7½	5
30	Low	7½	5
30	2200	10	7½
40	Low	10	7½
40	2200	10	7½
50	Low	7½	5
50	2200	10	7½
60	Low	10	7½
60	2200	10	7½
75	Low	10	7½
75	2200	10	7½
900 R. P. M.			
½	Low	1	1
¾	Low	1	1
1	Low	1	1
1½	Low	1½	1
2	Low	1½	1½
3	Low	2	1½
5	Low	3	2
7½	Low	3	3
10	Low	4	3
15	Low	5	4
20	Low	5	5
20	2200	10	7½
25	Low	7½	5
25	2200	10	7½
30	Low	10	7½
30	2200	10	7½
40	Low	10	7½
40	2200	10	7½
50	Low	15	10
50	2200	15	10
60	Low	15	10
60	2200	15	10
75	Low	15	10
75	2200	15	10
100	Low	20	10
100	2200	20	10
125	Low	25	20
125	2200	30	20
150	Low	25	20
150	2200	25	20
200	Low	30	15
200	2200	35	20
720 R. P. M.			
5	Low	2	2
7½	Low	4	4
10	Low	4	3
15	Low	5	4
20	Low	7½	5
25	Low	10	5
30	Low	10	5
30	2200	15	10
40	Low	10	7½
40	2200	15	15
50	Low	15	10
50	2200	15	10
60	Low	20	15
60	2200	20	20
75	Low	20	15
75	2200	25	20
100	Low	30	20
100	2200	25	20
125	Low	30	20
125	2200	30	20
150	Low	35	25
150	2200	40	35
200	Low	35	20
200	2200	40	25
600 R. P. M.			
5	Low	4	3
7½	Low	5	4
10	Low	5	5
15	Low	7½	5
20	Low	10	7½
25	Low	10	7½
25	2200	20	15
30	Low	10	7½
30	2200	20	15
40	Low	15	10
40	2200	20	15
50	Low	20	15
50	2200	20	15
60	Low	20	15
60	2200	25	20
75	Low	25	20
75	2200	40	30
100	Low	20	15
100	2200	25	20
125	Low	30	20
125	2200	35	30
150	Low	50	40
150	2200	50	50
200	Low	50	35
200	2200	50	40

Low means 220, 440, or 550 volts.

Table above gives the nearest standard capacitor kv-a. ratings to correct power factor of squirrel-cage induction motors to .95 or .90. Although the magnetizing current requirement of the induction motor varies somewhat from no load to full load, if the motor is corrected to the desired power factor at ½ load (values in the table above) it will be corrected approximately to this power factor at all loads. Actually the power factor will be somewhat higher at no load and slightly lower at full load.

Inasmuch as the power-factor characteristics of induction motors of the same rating vary considerably with different manufacturers the values above are necessarily approximate. The capacitor sizes indicated will be proper however, in the majority of cases.

Fig. 224. This table gives the approximate sizes of condensers required for use with individual squirrel-cage motors to correct the power factor to either 90 or 95 per cent. as desired. It will be well worth your time to become thoroughly familiar with the use of this table and the one in Fig. 223.

A 30-h.p., 2200-volt motor requires a 4-kv-a. condenser to increase its power factor to 90%; or a 7½-kv-a. unit to increase the power factor to 95%.

The discussion of power factor correction which has been given in this section, and also the examples of practical problems and calculations along with the convenient tables, should be given very careful consideration and you should not leave this subject until you are quite sure that you have a good general understanding of the application of these principles and calculations to problems which you may encounter in the field.

In a great number of industrial plants, factories, and other places where electric power equipment is in use and where you may be employed, the owners or even the men in charge of the electrical work may not realize the importance of power factor or the great amount of savings which can in many cases be effected by improving the power factor.

It is not uncommon to find plants with loads of several thousand kw. operating at a power factor ranging from 50 to 90 per cent. In some cases feeder conductors are seriously overloaded and transformers and alternators are overloaded and operating at excessive temperatures, which can be avoided by improving the power factor.

In other cases transformers, alternators, or feeders may be loaded to their utmost capacity and the management may be planning to install additional units and circuits.

If the power factor of the system is very low, it may be possible to avoid the expense of the new alternators and transformers by installing power-factor corrective equipment of much lower cost than new machines. This is particularly true in cases where the company generates its own power and the addition of another alternator would also require added boiler-plant capacity and a turbine or engine to drive the alternator.

The trained man very often has splendid opportunities to suggest and lay out the method of correcting power factor in the plant where he is employed and thereby saving substantial sums for his employer.

For this reason, we suggest you review this material and be sure to keep it well in mind for reference and to use in any job where you may have a chance to apply it to your employer's advantage and your own credit.

COYNE
Electrical School
CHICAGO ~~ ILLINOIS
ESTABLISHED 1899

ALTERNATING CURRENT POWER
AND
A. C. POWER MACHINES

Section Six

Rectifiers and Converters
Vibrating, Electrolytic, Bulb Type, Copper Oxide
and Mercury Arc Rectifiers
Construction, Operation, Care, Applications
Synchronous Converters
Construction, Operating Principles, Characteristics
Voltage Ratios, Voltage Control
Starting and Operating, Auxiliaries, Care
A. C. Motor Controls
Types, Applications and Advantages of Each
Resistance, Auto Transformer and Drum Types
Manual, Automatic and Remote Controllers
Connections and Circuits. Protective Devices
Installation, Care and Maintenance

RECTIFIERS AND CONVERTERS

While the greater part of the electrical energy used today is generated and transmitted in the form of alternating current, there are a number of special power uses which require direct current.

In plants where a large amount of D.C. is used, it is often produced in this form by D.C. generators, as previously explained. In other cases, where it is cheaper to buy A.C. from a power company or where only very small amounts of D.C. are required, it is common practice to rectify or convert A.C. to D.C.

The most common devices used for this purpose are rectifiers, converters, and motor-generators.

There are several types of rectifiers in common use. These are as follows: **Vibrating, Electrolytic, Bulb Type,** and **Mercury Vapor.**

The vibrator, electrolytic, and bulb types of rectifiers are generally used only for converting small amounts of energy to D.C., for such work as battery charging, operation of D.C. radio sets, electro-magnets, D.C. arc lights, bell and signal systems, experimental and laboratory work, etc.

Mercury arc rectifiers are used in small sizes for the above purposes, and also in large sizes of 1000 kw. and more for supplying D.C. to electric railways, etc.

Rotary converters are also used for changing A.C. to D.C. and are made in large sizes from 100 kw. to several thousand kw., for supplying D.C. to railways and for industrial-power motors and equipment.

Motor-generators are sometimes used in large sizes of several thousand kw. for supplying D.C. for steel mill motors and such uses, where the service and load variations are very severe; and in smaller sizes for arc welding, etc.

240. VIBRATING RECTIFIERS

Vibrator-type rectifiers are generally used only on low voltages and very small currents. They are not very extensively used because they have wearing parts and require considerable care and maintenance.

These vibrating rectifiers are synchronous switching devices which reverse the circuit connections at each reversal or alternation of the A.C. supply. They generally operate by the repulsion and attraction of a permanent magnet armature by a pair of A.C. electro-magnets. The moving armature operates the contacts which rapidly reverse the connections of the circuit.

Fig. 225 shows a diagram of the connections and parts of a common type of vibrating rectifier. This rectifier is shown connected to a low-voltage battery which, of course, requires direct current to charge it.

The transformer, T, steps down the voltage from the 110-volt A.C. line to the proper value for operating the magnets of the rectifier and charging the battery.

As the alternating current reverses through the coils of the two electro-magnets M and M-1 which are both wound in the same direction, the polarity of these magnets is rapidly reversed and causes the permanent-magnet armature to vibrate back and forth in synchronism with the alternations of the current.

The secondary of the transformer is provided with a center tap and only half of its winding is used to magnetize the coils. Only half of this winding is used at any instant to charge the battery.

241. OPERATION

When the right-hand end of the secondary is positive, both magnets will have north poles on their lower ends; and the right-hand end of the armature will be repelled, closing the circuit at the adjustable contact X-1.

This allows current to flow from the right-hand end of the transformer winding through resistance R-1, contacts at X-1 through the armature, and to the positive terminal of the battery. This current returns from the negative side of the battery to the center tap of the transformer secondary, thus completing the charging circuit.

Direct current doesn't flow through the small condensers C and C-1 which are merely shunted across the contacts to prevent arcing and burning of the points.

When the alternating current reverses and the left-hand end of the transformer secondary is positive, the lower ends of both electro-magnets will then be south poles and the left-end of the armature will be repelled, closing the contact at X.

The current then flows from the left-end of the transformer secondary through resistance R, contact X, and armature A, to the positive side of the battery, and again returns from the negative terminal of the battery to the center tap of the transformer winding.

The resistance R-2 is used to adjust the strength of the electro-magnets.

You will note that with this type of rectifier both halves of the cycle are used in charging the battery; so it is known as the "full wave" type.

The pulsating direct current always leaves the armature terminal and re-enters the center tap of the secondary winding, so that with a rectifier of this type it is important to get the battery connected with the proper polarity in order to charge it.

Some vibrating rectifiers have a small winding around the movable armature and connected to the terminals which lead to the battery, as shown by the dotted lines in this diagram. This winding reverses the polarity of the armature in case the battery is reversed and thereby makes the direct current flow through the battery in the proper direction, regardless of which way it is connected.

A number of vibrating rectifiers are made, and some of them use different connections and arrangement of parts than those mentioned, but in general their principles are all very much alike.

The high speed at which the armature is required to vibrate and the continual opening and closing of the contacts causes them to become worn and in some cases burned and pitted by the arc formed when the current is interrupted.

For this reason the contacts require frequent cleaning and adjustment if the rectifier is used for very long periods.

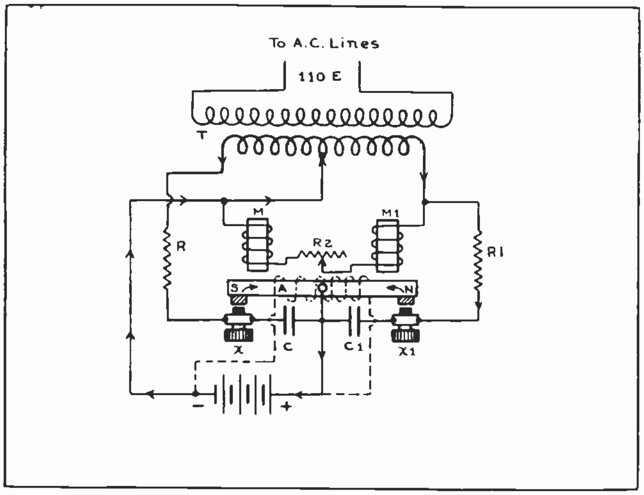

Fig. 225. The above diagram shows the parts and connections of a simple mehanical rectifier of the vibrating type. The synchronous operation of the contacts delivers pulsating D.C. to the battery circuit.

242. ELECTROLYTIC RECTIFIERS

The electrolytic type of rectifier is also limited to small capacities, due to its low efficiency and general tendency to heat up under load because of the large resistance losses which take place within the rectifier itself.

Fig. 226-A shows a simple electrolytic rectifier connected in series with a lamp bank to limit the current flow, and in series with the battery which is to be charged by the pulsating current.

This type of rectifier consists of a jar containing a strong solution of ammonium phosphate, sodium phosphate, or just a mixture of water and common borax. In this solution are immersed a plate of either lead, carbon or iron, and one of aluminum.

The electrolytic action which is set up between the surface of the aluminum electrode and the electrolyte solution will allow the current to flow from the solution into the aluminum, but will immediately build up a very high resistance film when the current is reversed and tries to flow from the aluminum into the electrolyte.

This high-resistance film shuts off the greater part of the current flow during every other alternation, and thus allows the impulses of current to get through the rectifier in only one direction; so that the current applied to the battery is pulsating D.C.

A lamp bank consisting of several lamps in parallel, or some other form of resistor, is often used in series with these rectifiers to limit the current to the proper low value.

The resistance of the rectifier itself is often so low that if it and the battery were connected in series across the line it would result in practically a short circuit and blow the fuses.

243. HALF WAVE AND FULL WAVE RECTIFIERS

A rectifier such as shown in Fig. 226-A uses only every other alternation and is therefore known as a **half-wave rectifier.** This is because the current flow in one direction is blocked except for a small amount of leakage which is required to build up the resistive film on the electrodes.

Fig. 226-B shows another electrolytic rectifier which is of the full-wave type and in which both alternations are used to supply impulses in the same direction through the battery. With this device an auto transformer or choke coil is connected across the 110-volt leads and equipped with taps near the ends of its winding, so that the voltage applied to the rectifier and battery can be varied or adjusted.

When the left end of the transformer is positive, current will flow through that half of the auto transformer winding to the center tap, where a part of the current branches off through the battery and through the rectifier cell from the lead or carbon electrode to the aluminum electrode on the right, and then back to the right-hand line wire. No current can flow from the left-hand line wire to the aluminum electrode A and then to the center

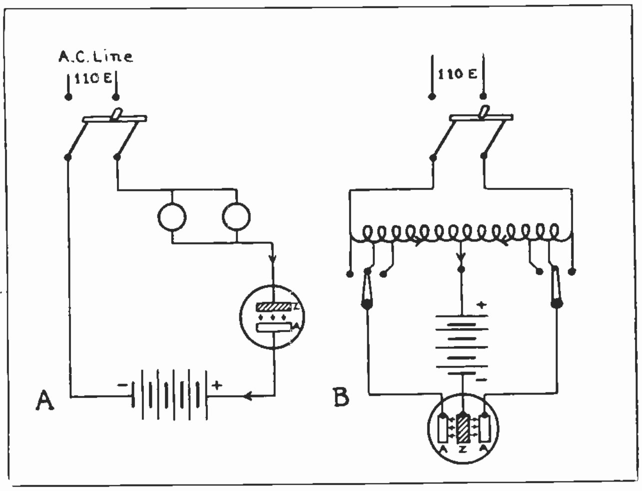

Fig. 226-A. Shows a half-wave, electrolytic rectifier and B shows an electrolytic rectifier of the full-wave type. Current can only pass through these devices in one direction.

lead electrode, because the current cannot pass through the rectifier in this direction.

When the polarity of the A.C. line reverses and the right-hand end of the auto transformer becomes positive, current will then flow to the line through the right section of the winding to the center tap. At this point part of the current again branches off through the battery and flows from the lead plate of the rectifier to the aluminum electrode A on the left, and back to the left side of the line.

At all times during the operation of this rectifier a certain amount of current is wasted by passing directly through the winding of the auto transformer which is connected across the A.C. line.

244. CONSTRUCTION AND CARE

This simple electrolytic, valve-type, rectifier can be purchased in various small sizes, or can be easily and simply made from a few inexpensive materials.

A glass jar of about one-quart size or larger can be used to contain the solution of borax and water, and the strips of lead or aluminum are very easily obtainable. An iron rod or carbon rod can be used in place of the lead strip, if desired.

These electrodes should be suspended or held in the solution in such a manner that they cannot fall together and short-circuit the rectifier.

In mixing the electrolyte with borax, a saturated solution should be made; in other words, stir into the water as much borax as it will hold in suspension after being well stirred.

Very small rectifiers of this type are quite often used as "trickle chargers", to keep batteries up to fully charged conditions at all times.

Fig. *227* shows another type of full-wave electrolytic rectifier, using four separate jars to obtain a more positive valve effect by causing the current to pass through two jars in series, one in the positive lead and one in the negative lead of the battery.

During the time that the left line-wire is positive, the current flow through the rectifier and battery is in the direction shown by the solid arrows. When the polarity of the A.C. line reverses and the right line-wire becomes positive, the current flows through the circuit indicated by the dotted arrows.

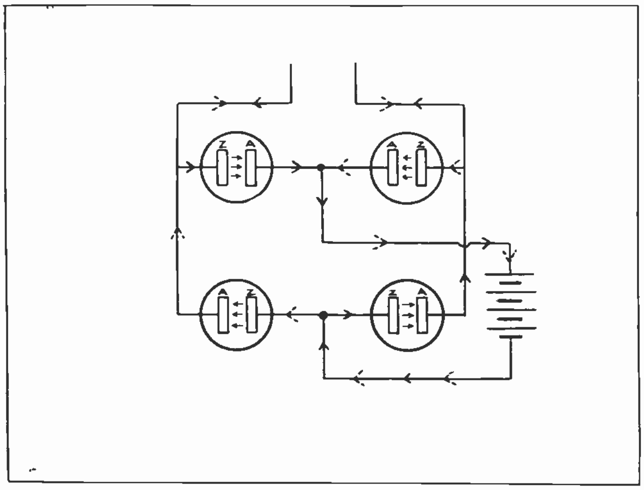

Fig. 227. Full-wave, electrolytic rectifier using four cells connected in a "bridge" circuit.

If rectifiers of this type overheat seriously they should be placed in larger containers so that they will have more area to radiate the heat.

After an electrolytic rectifier is used for a considerable length of time, heavy deposits will form on the electrodes and interfere with the proper action of the rectifier. The electrodes should then be scraped clean or renewed, and the solution should also be renewed occasionally.

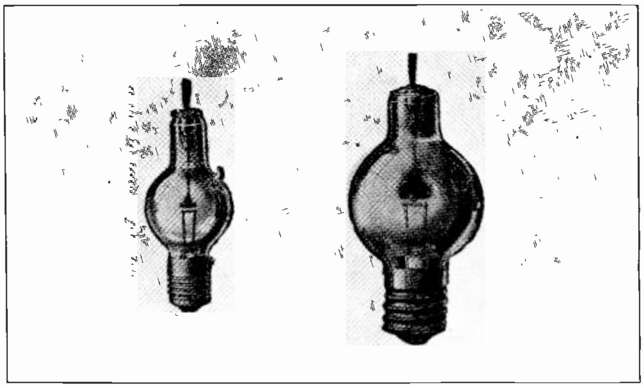

Fig. 228. The above view shows two different sized rectifier bulbs such as commonly used in battery chargers and other small rectifiers.

245. BULB-TYPE RECTIFIERS

Rectifiers using gas-filled bulbs with a heated filament for the rectifying valve are very extensively used for battery charging and the operation of radio sets, as well as for other miscellaneous uses where only small amounts of direct current are required.

The valve element in these rectifiers consists of a gas-filled bulb such as shown in two different sizes in Fig. *228*. These bulbs are evacuated and are generally filled with argon gas. They enclose a filament which is heated by passing low-voltage alternating current through it, and an electrode of graphite to which is connected the other terminal to complete the circuit through the bulb.

246. OPERATING PRINCIPLES

When the filaments of these bulbs are heated, electrons are thrown off into the gas and form a conducting path of rather high resistance between the graphite electrode and the filament.

Due to the nature and action of the electrons thrown off by the filament, the current can pass in only one direction through the arc thus formed, or **from the graphite electrode to the filament.** It cannot flow in the opposite direction to any appreciable extent; so when the A. C. reverses, the opposite half of the wave is shut off by the valve action of the bulb.

Fig. *229-A* shows a simple half-wave rectifier of the bulb type. An auto transformer is used to supply the low voltage at about 2 or 3 volts to light

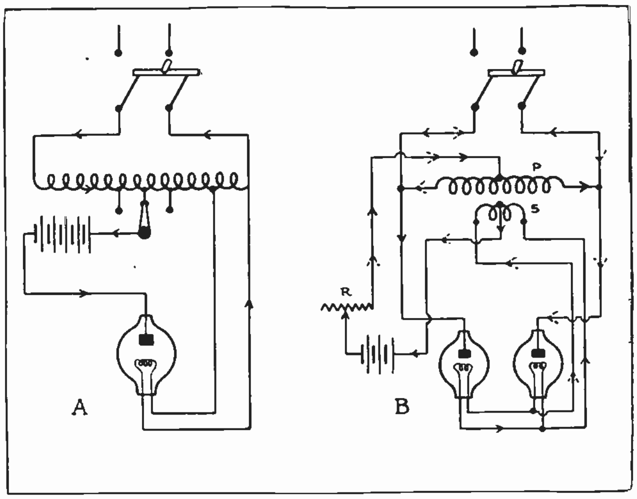

Fig. 229-A. Shows a circuit of a simple half-wave rectifier of the bulb type, and B shows the circuit of a full-wave rectifier using two bulbs. Trace each of these circuits very carefully.

the filament and also to reduce the voltage applied to the battery and rectifier bulb.

As long as the filament is lighted, negative electrons are thrown off from it continuously. During the time that the graphite electrode is positively charged it attracts these negative electrons, causing them to stream across the space and complete a path or arc through which current can flow to charge the battery.

When the graphite electrode is negatively charged it repels the negative electrons from the filament and prevents the majority of them from cutting across the gap, and thus they are prevented from forming a path over which the low-voltage current can flow.

The bulb in this manner acts as a valve, shutting off every other alternation of current. The taps provided on the winding of the auto transformer permit the adjustment of the voltage applied to the battery to allow changing the rate of current flow and the rate at which the battery is being charged.

During the operation of a rectifier of this type it is necessary for the secondary of the auto transformer to apply to the battery and bulb circuit a voltage high enough to overcome the counter-voltage of the battery plus about 20 to 26 volts drop through the bulb. The voltage drop through the arc in the bulb varies with the amount of load or charging current which is flowing. The counter-voltage of the battery depends upon the number of cells in series which are being charged at one time.

247. FULL-WAVE BULB-TYPE RECTIFIERS

Fig. 229-B shows a full-wave, bulb-type rectifier using two bulbs to make use of both alternations of the A.C. supply. The transformer primary winding, P, is connected directly across the 110-volt line, and induces the low voltage in the secondary winding, S, to light the filaments of both bulbs in parallel.

When the left line-wire is positive, the current flows in through the left rectifier bulb, passing through this bulb from the graphite electrode to the filament, out along the filament lead to the transformer secondary, and leaves this winding at the center tap, then passing through the battery and rheostat R, back to the center tap of the primary winding, and through the right-hand side of this winding to the negative line-wire. This circuit is shown by the solid arrows.

When the line polarity reverses, current flows as shown by the dotted arrows: through the right-hand bulb to the secondary of the transformer, from the center tap of this winding through the battery in the same direction as before, then to the center tap of the primary winding, and out through the left section of this winding to the line wire.

The resistance R in this case is used to control the flow of current through the battery and thereby regulate the charging rate.

While bulb-type rectifiers of this class are not very efficient because of the voltage drop and resistance losses through the bulbs, they are nevertheless very popular because they have no moving or wearing parts and no electrodes to accumulate deposits. Therefore, bulb-type rectifiers require very little attention, except the occasional replacement of a bulb when they burn out after a certain number of hours of use.

Two common types of these rectifiers are made under the trade names "Tungar" and "Rectigon". The first named is made by the General Electric Company and the other by the Westinghouse Electric & Manufacturing Company.

248. WIRING AND CIRCUITS OF BULB-TYPE RECTIFIERS

Fig. 230 shows a wiring diagram for a Tungar rectifier for charging from 1 to 10 six-volt batteries in series. By carefully tracing this circuit you will find that the 110-volt line-leads pass through the switch S and connect to leads A and B of the auto transformer winding, so that this winding is connected across the line and is excited by 110-volt A.C.

This acts as a primary winding and induces the low voltage current in the secondary section from A to C to supply the filament current. When the filament is lighted, current passes during every other alternation from the bottom A.C. line-wire up through the switch and through that portion of the primary winding to the tap on which the rotary arm D may rest.

The current then passes through this arm and back through another bar of the switch, through the fuse F to the positive terminal of the battery, through the battery and back through the reactance coil or contact coil R, through the ammeter A which indicates the charging current, through the

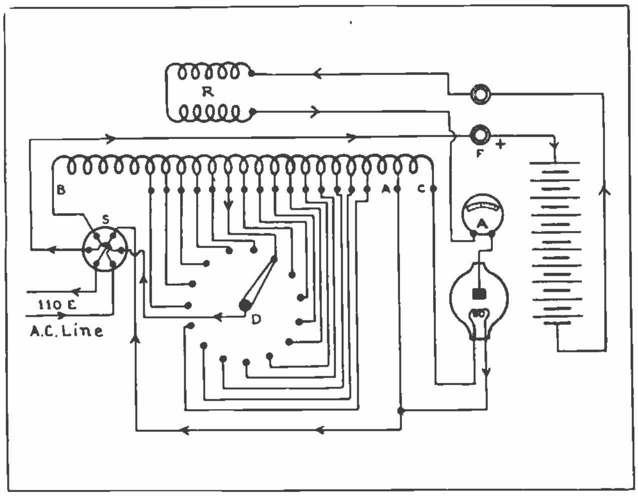

Fig. 230. Wiring diagram of a Tungar type bulb rectifier showing the taps on the auto transformer winding for varying the charging voltage.

bulb, out of the right-hand filament wire, and back to the top A.C. line-wire.

When the current attempts to flow in the reverse direction the valve action of the tube prevents it from doing so. The taps on the primary winding and the adjustable arm D provide a wide range of voltage variation to properly adjust the charging rate for any number of batteries from 1 to 10 which may be in the circuit at the time.

Fig. 231 shows a Tungar rectifier of this type with, one side of the case removed, showing the bulb and fuses inside. On the front panel of this unit can be seen the line switch, ammeter, and voltage adjustment knob.

When operating rectifiers of the bulb type, care should be used not to overload them; because if they are allowed to carry more current than the bulbs and windings are made to stand, it will burn out the bulbs almost immediately and may also overheat and burn out the windings of the transformers and choke coils.

The bulbs are commonly made in the 2 and 6-ampere sizes, and fuses of the plug type are generally provided with these rectifiers to protect them from overload. These fuses should always be replaced with those of the proper size in order to protect the rectifier.

It is a good precaution to locate these rectifiers in a place where plenty of fresh air can circulate through them and this will help to prevent them from overheating.

Fig. 232 shows the diagram of a full-wave Rectigon charger, of the type made by the Westinghouse Electric & Manufacturing Company.

249. KENOTRON RECTIFIERS

The type of gas-filled bulb rectifier just described is particularly designed for operation on comparatively low voltages such as from 110 and 220-volt A.C. supply lines.

For rectifying high voltages from 5000 to 100,000 volts or more, the Kenotron rectifier tube is used. These are larger tubes which have a vacuum instead of being gas filled. They also have a filament which is heated by low-voltage A.C. and a plate or anode in the form of a metal cylinder surrounding the filament.

These tubes or valves also operate on the electron principle, but have a much higher resistance and greater voltage drop through the space between the filament and plate. They are suitable for rectifying very high voltage and high-frequency A.C., such as radio energy.

250. COPPER OXIDE RECTIFIERS

Another type of rectifier which has come into quite extensive use during the last few years is one which uses a film of copper oxide on the surface of a copper disk, to act as a valve and pass current through it only in one direction.

These devices provide a very convenient portable type of rectifier for use where only very small amounts of current are required. They are very commonly used in radio sets and for the operation of certain D.C. signalling equipment, battery charging, etc.

They are also used to provide direct current for the operation of electro-magnets, magnetically-operated oil switches, and similar equipment in power plants and substations.

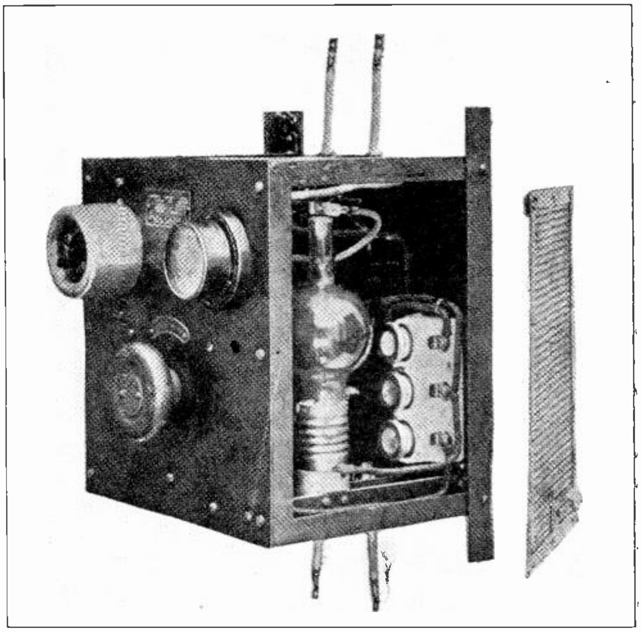

Fig. 231. The above photo shows a side-view of a Tungar rectifier with the bulb in place in the socket and the tap adjusting knob on the front panel. (Courtesy General Electric Company).

These rectifiers operate on a principle similar to that of the copper oxide lightning arrester, and the current can pass through them only in one direction, that is, from the oxide to the metal plate.

These disks can be made in different sizes according to the current capacity desired, and a number of them can be stacked or clamped in series to build up the proper resistance according to the voltage which is to be used on them.

Fig. 233 shows a group of the rectifier disks clamped together and equipped with projecting metal disks of larger diameter to assist in radiating the heat from the unit.

Fig. 234 shows the manner in which a number of these units can be connected in series or parallel and mounted in a panel or bank to provide a rectifier of the proper voltage-rating and current capacity.

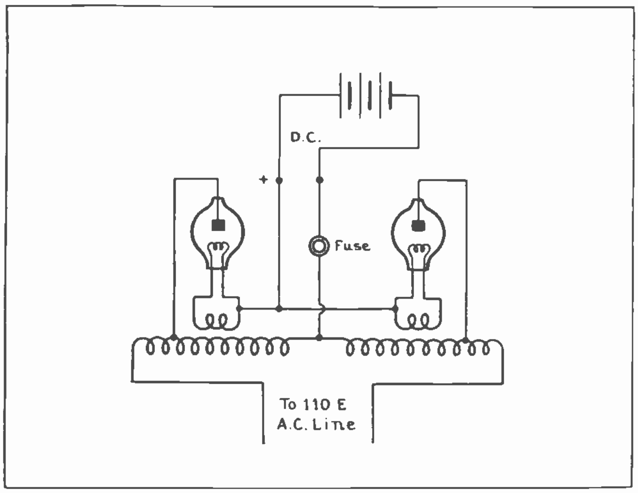

Fig. 232. This diagram shows the circuit of a full-wave Rectigon charger of the type made by Westinghouse Electric & Manufacturing Company. By carefully tracing this circuit you can get a very good idea of the principle of its operation.

Fig. 235 shows a diagram of the connections of a full-wave, copper oxide rectifier using four groups of disks connected in a "bridge" circuit. The solid arrows show the direction of current flow through the rectifier during one alternation, and the dotted arrows show the direction of current flow during the opposite alternation.

Rectifiers of this type can be made in capacities from a fraction of an ampere to 100 amperes or more. Having no moving mechanical parts to wear out and no liquid electrolyte to spill or leak, they provide a very convenient and popular type of rectifier.

The maximum life of the copper oxide disks seems to be undetermined, for a number of these units have been operated for several years without any noticeable reduction in efficiency.

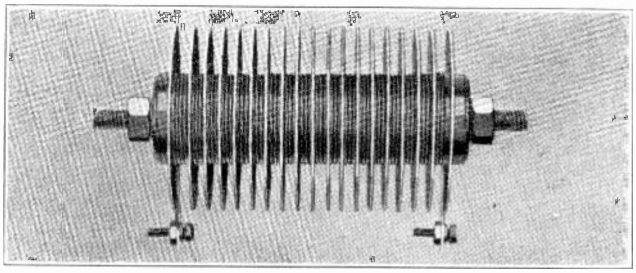

Fig. 233. Single unit of a copper oxide rectifier, consisting of a number of copper disks coated with copper oxide and clamped into one series group. Current can only pass through these devices in one direction. (Courtesy of Westinghouse Elec. & Mfg. Co.).

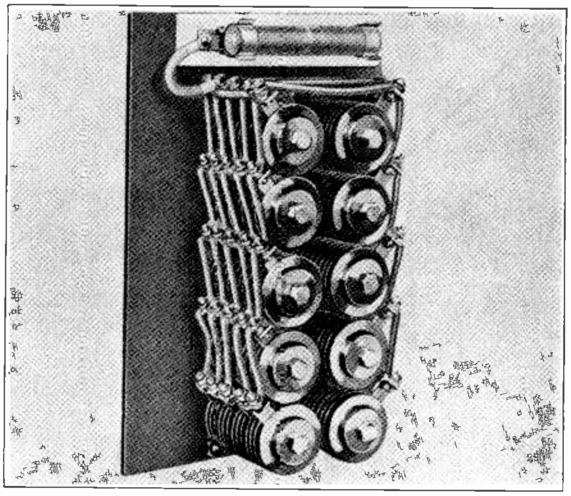

Fig. 234. Copper oxide rectifier consisting of a number of units connected in series and parallel to obtain increased voltage and current capacity. (Courtesy Westinghouse Elec. & Mfg. Co.).

Fig. 236 is a photo made by an oscillograph showing the alternating current wave on the lower line and the rectified, pulsating, direct current on the upper line.

251. MERCURY ARC RECTIFIERS

Rectifiers using the valve effect of electrodes and an arc in mercury vapor can be made in sizes ranging from those of a few amperes at low voltage for battery charging purposes, to those of 1000 kw. or more which are used for converting A.C. to D.C. in electrical railway and industrial substations.

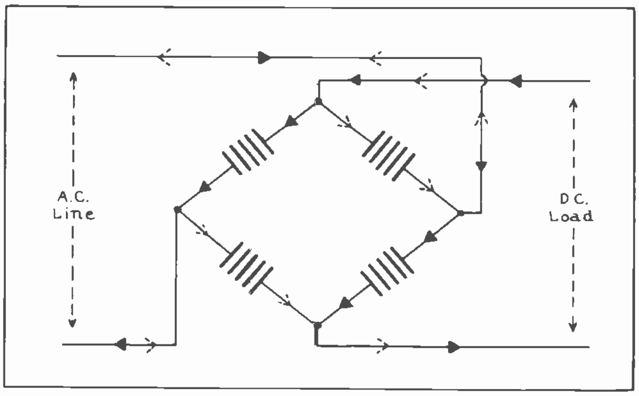

Fig. 235. Connection diagram of a full-wave, copper oxide rectifier with four units connected in a "bridge" type circuit.

Rectifiers of this type which are used for battery charging and D.C. arc lighting purposes are designed to operate on A.C. voltages from 110 to several hundred volts, and to produce rectified D.C. in amounts from 2 or 3 amperes to 50 amperes or more.

These small units use a glass bulb in which a small pool of mercury is enclosed and which has the required electrodes sealed into the bulb at the proper locations.

Several common types of these mercury-arc rectifier bulbs are shown in Fig. 237.

Larger rectifiers for power use are designed to operate on voltages from 200 up to 5000, and to handle currents of several hundred to 1000 amperes or more. These units have the mercury enclosed in an iron tank from which the air is exhausted and into which are sealed the insulated electrodes to conduct the current to and from the tank.

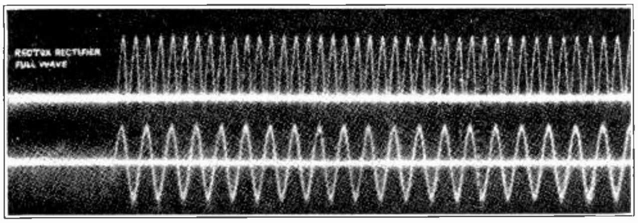

Fig. 236. Photo taken from an oscillograph record, showing the alternating current wave below and the rectified, pulsating D.C. wave above. (Courtesy Westinghouse Elec. & Mfg. Co.).

252. VALVE EFFECT

In the section of this Reference Set covering Illumination and dealing with the mercury vapor lamp, we learned that current can flow in only one direction through a mercury-vapor bulb or tube of this type; that is, from the anode to the mercury.

The current will not flow in the reverse direction from the mercury pool to the anodes or positive metal electrodes. The mercury vapor forms a path of moderate resistance through which the current flows in the space between the metal anodes and the mercury cathode (negative electrode). This valve effect can be used to form a half-wave or full-wave rectifier for single-phase circuits; and, by adding the proper number of electrodes, mercury-vapor rectifiers can also be used on polyphase circuits.

In Fig. 237 the pool of mercury can be seen in the lower neck or extension of the glass bulb. The anodes or metal electrodes are sealed into the ends of the arms or extensions on the sides of the bulb.

These electrodes and the mercury pool are connected to the metal caps or ferrules on the outside by means of lead-in wires which are sealed into the glass.

The air and foreign gases are withdrawn from these bulbs, so that they operate under a partial vacuum with only the mercury vapor inside them.

253. CONNECTIONS AND OPERATION

Fig. 238 shows a diagram of the connections for a full-wave mercury-arc rectifier of the type used for battery charging. The transformer supplies alternating current at the proper voltage to the two anodes or electrodes in the glass extensions or arms on the side of the bulb.

When the left lead of the transformer is positive, current passes down from the left electrode to the mercury, and then from the terminal at the bottom of the mercury pool through the battery and choke coil or reactor R, returning to the transformer secondary at the center tap, completing the circuit through the left half of the secondary winding.

During the next alternation, when the opposite wire is positive, current flows down from the right-hand electrode to the mercury pool and again through the battery in the same direction, returning to the center tap of the transformer and completing the circuit through the right half of this winding. In this manner both halves of the cycle are used, thus making the unit a full-wave rectifier.

254. STARTING

To start a mercury arc rectifier of this type, it is necessary to first establish the mercury vapor in the tube and to form the hot spot on the surface of the mercury pool. In some cases this is done by means of high voltage applied through an auxiliary electrode above the surface of the mercury and used to draw an arc or apply high voltage from a spark coil. More commonly, however, rectifiers of the bulb type, such as shown in Fig. 238, have an auxiliary starting electrode in the small projection or leg, S, at the lower right. When the bulb is in normal operating position the level of the mercury in the main cathode stem and in the starting arm is such that the two pools are separated by the glass neck between them.

To start these rectifiers, the tube is tilted a little to one side so that some of the mercury from the main pool runs into the starting arm, momentarily bridging the gap and connecting the two pools together. This closes a circuit from the right half of the transformer winding through the resistor T, through the mercury, and out of the main cathode terminal at the bottom, then through the battery, reactor R, and back to the center tap of the transformer.

This allows current of the proper amount to flow through the mercury, so that when the tube is

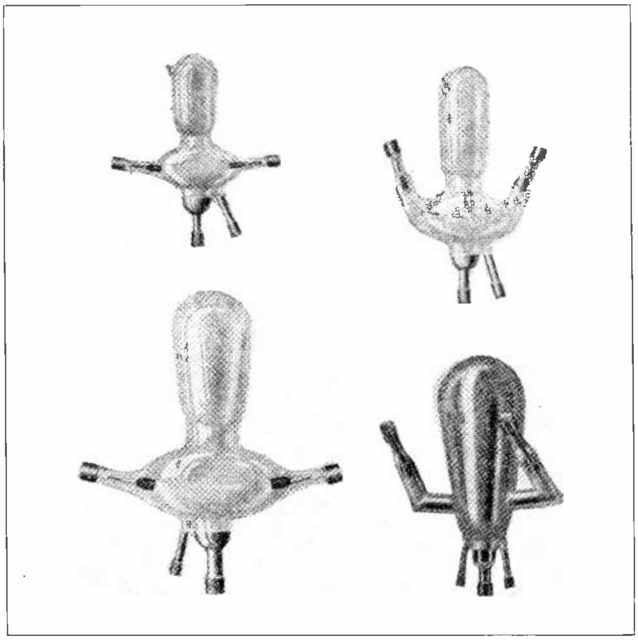

Fig. 237. Four mercury arc rectifier bulbs of different sizes and shapes. Note the mercury cathode in the bottom end of each bulb and the metal anodes in each of the main side arms.

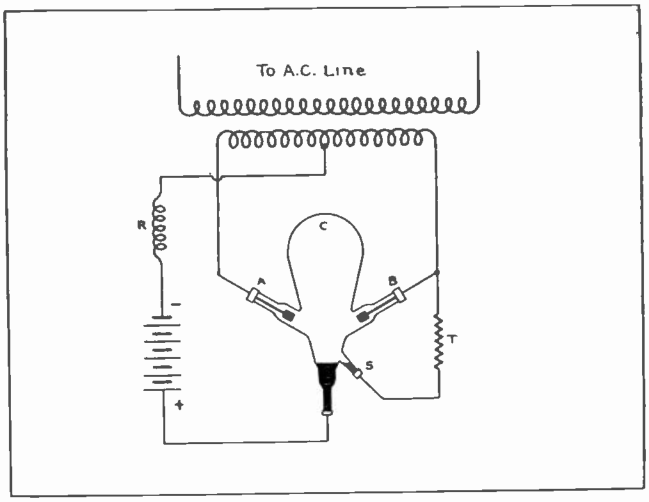

Fig. 238. Circuit diagram of a bulb type mercury arc rectifier used for battery charging purposes. Trace this circuit carefully with the accompanying explanation.

tilted back to normal position and the two pools are separated an arc is drawn between them. This arc sets up the required hot spot on the mercury cathode or pool and vaporizes sufficient mercury to start the flow of current from the anodes A and B.

Keep in mind that the anodes are always the positive terminals or the ones from which current flows into the mercury and that the cathode, or negative, in this case is the mercury pool. This applies to the internal circuit of the rectifier. The current leaves the rectifier at the terminal attached to the mercury, so this is the positive terminal of the external D.C. circuit.

Current cannot flow directly across between anodes A and B because of the valve action of the mercury vapor, and due to the shape and characteristics of these electrodes in contact with the mercury vapor. Therefore, current cannot flow from the mercury vapor into either anode, and this prevents any short circuit between them. The current actually flows alternately from first one anode and then the other into the mercury pool and out to the battery, but during normal operation it never flows in the reverse direction.

The large upper part of the bulb C forms a condensing chamber or dome in which the surplus mercury vapor cools and condenses, running back down the sides of the glass into the pool at the bottom.

Fig. 239 shows a complete mercury-vapor rectifier. The bulb and transformer are shown mounted on the back of the frame. The bulb can be arranged for tilting either by hand or by means of a magnet when starting.

Sometimes when the bulb is cold it may be necessary to tilt the bulb several times and repeat the forming of an arc in order to get the unit to start. As soon as the current flow from the anodes starts and the rectifier begins to operate, the interior of the bulb glows with a peculiar bluish tint characteristic of the mercury-vapor arc formed when current is passed through the vapor in the bulb.

Numerous units of this type are in use for battery charging in large garages or places where fleets of electric trucks are used, and also in older substations supplying direct current to D.C. arc lights. These rectifiers are also used in motion picture theatres for supplying direct current to the arc lights of projector machines.

255. CARE AND TESTING OF BULBS

It is absolutely necessary to maintain the proper vacuum in the rectifier bulb, in order that the rectifier may operate properly. For this reason the bulbs should be handled very carefully, because the slightest crack anywhere in the glass or at the points where the terminals are sealed into the ends of the glass arms will allow air to leak into the bulb and prevent its operation.

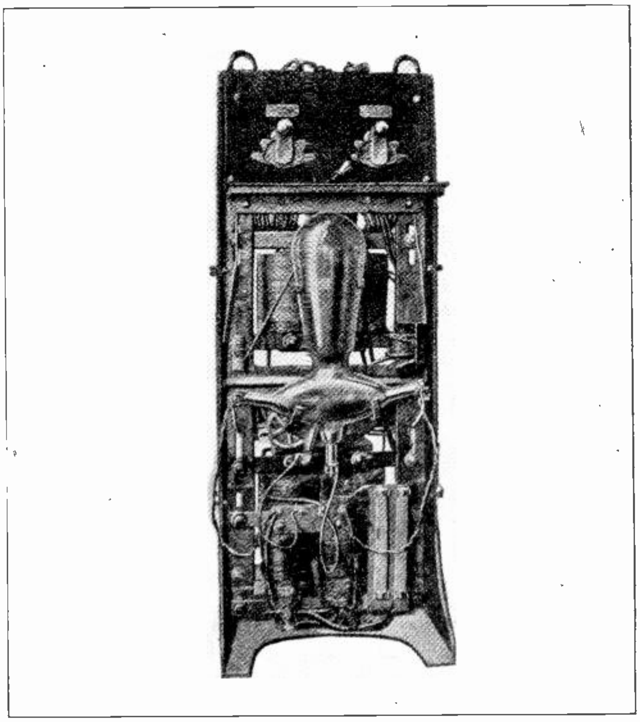

Fig. 239. Rear view of a complete mercury arc rectifier showing the bulb and also the auto transformers, resistors, tap adjusters, etc.

A simple test to determine whether the bulb is good or whether it has lost its vacuum is similar to the one described for mercury-vapor lamps in the section on Illumination. If the bulb is removed from its clamps or holder and is tilted enough to allow the mercury to splash a little, a sharp clicking sound will be heard if the vacuum is good. If air has leaked into the bulb through a crack or if foreign gases have been formed inside of the bulb, the sound of the mercury running from one point to another will be very dead and soft, indicating that the vacuum in the bulb has been destroyed.

These rectifiers should not be overloaded beyond their current capacity for any great length of time or the bulbs may overheat and become damaged. A good mercury-arc rectifier bulb, if handled and operated properly, will often have a useful life of many years.

256. POWER RECTIFIERS

Large mercury arc rectifiers for power purposes have the mercury and electrodes enclosed in an iron tank as previously mentioned.

Fig. 239-A shows a 600-kw. mercury-arc rectifier for operation at 575 volts. The mercury is in a small pool or insulated pot at the bottom of the large iron tank, and the tank contains the mercury vapor and the arc during operation of the rectifier.

This large tank also serves to condense the mercury vapor which is continually being generated by the arc, and allows the condensed mercury to run back to the pool at the bottom.

The rectifier shown in Fig. 239 is for 6-phase operation and the six anodes or positive terminals enter the tank through specially constructed and sealed insulating bushings, clearly shown on top of the tank in this view. The large ribbed elements on each of these six leads are provided to radiate the heat and aid in cooling the anodes.

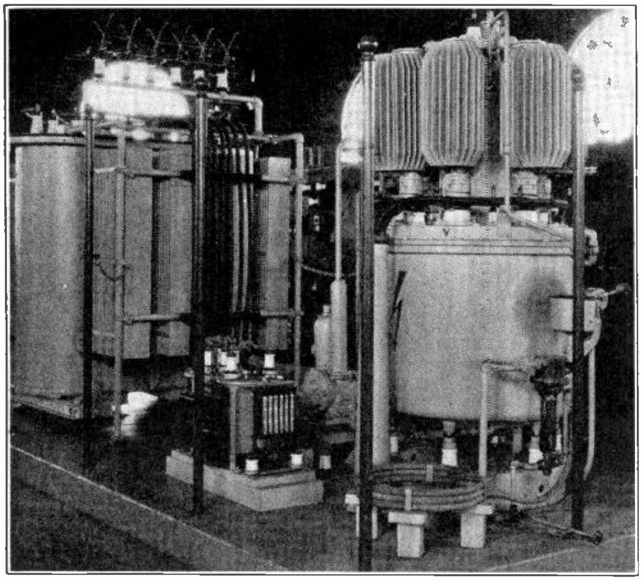

Fig. 239-A. The above photo shows a 600-kw., 575-volt, mercury arc power rectifier with the transformer and auxiliaries at the left. Note the cooling fins or radiators on the anodes. (Photo courtesy American Brown Boveri Co.).

The mercury pool at the bottom of the tank acts as the cathode and has a heavy cable or conductor connected to it by means of a terminal which projects into the bottom of the mercury pool. This conductor leads to the positive D.C. line.

Because it is practically impossible to avoid all leakage of air to the inside of the tank, these large rectifiers are equipped with an auxiliary vacuum pump which operates from time to time to remove air and gases from the tank and to maintain the vacuum necessary for proper operation of the rectifier.

The transformer, which supplies six-phase alternating current at the proper voltage, is shown at the left of the rectifier and vacuum pump equipment.

257. OPERATION

The operating principle of these large rectifiers is practically the same as that of the smaller ones using the glass bulb.

The current flows in turn from each of the six anodes at the top of the unit, through the mercury vapor in the lower chamber, to the hot spot on the mercury pool.

During normal operation the currents from the six separate phase anodes do not interfere with each other but all flow in the proper direction to the mercury.

An auxiliary electrode in the form of a metal rod is generally provided for starting these rectifiers. This rod passes into the top of the tank at the center through a special bushing which allows the rod to be moved up or down.

258. STARTING

To start the unit, the rod is lowered until it touches the surface of the mercury, closing the circuit for the proper amount of current required to form the starting arc. The rod is then lifted, causing the lower end to break contact with the surface of the mercury and draw the arc. This arc forms a hot spot on the surface of the mercury and starts the formation of mercury vapor necessary for the unit to commence operation.

The starting rod or electrode is generally operated by means of a solenoid which draws it into contact with the mercury, and a spring which again raises the rod to draw the arc.

259. COOLING AND TANK INSULATION

The main tank generally consists of two separate tanks, one within the other. The inner tank contains the mercury and maintains the vacuum around the mercury and the anodes, while the outer tank serves as a cooling shell and contains water which completely surrounds the inner tank.

During operation a small amount of water is continually circulated through this shell to carry away the heat developed.

The entire unit is mounted on insulators on the bottom of the outer tank, because the tank and the metal parts of the rectifier are always at slightly higher voltage than the mercury and cathode terminal which forms the high-voltage direct current lead that connects to the trolley in case of railway service.

260. EXCITER ANODES

To maintain the operating arc requires a certain small amount of current passing through the rectifier at all times. For this reason rectifiers of this

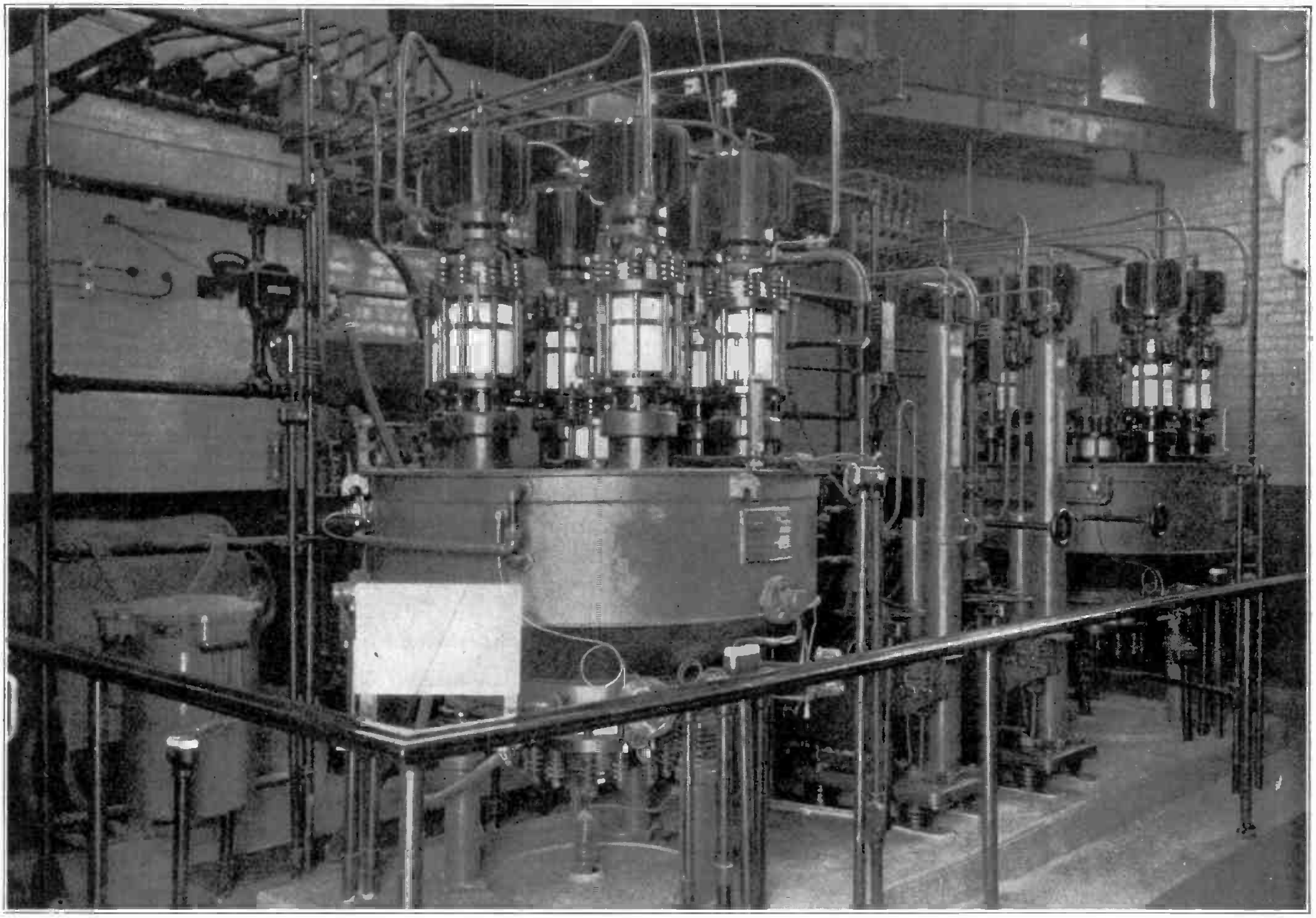

Fig. 240. This photo shows an excellent view of two 500-kw., 600-volt.mercury arc rectifiers. Note the insulators on the tank supports and also the insulating bushings through which the anodes enter the tank at the top. The vacuum pumps and a number of pieces of auxiliary equipment can be seen between the two units and in the background of the photo. (Courtesy General Electric Co.).

type are generally provided with auxiliary exciter anodes which keep up a small flow of current to maintain the hot spot on the surface of the mercury during any periods when the entire D.C. load may be removed from the rectifier.

Fig. 240 shows two 500-kw., 600-volt, 60-cycle mercury-arc rectifiers in a substation. In this photo you can see clearly the insulating bushings through which the anodes enter the tank and also the A.C. and D.C. leads leading to and from the rectifier. The vacuum pumps and gauges are located between the two rectifier units. This view also shows the manner in which the tanks are supported on steel posts, with insulators between the tops of the posts and the tanks.

Fig. 241 shows a sectional view of a six-phase mercury-arc rectifier. This view shows clearly the location of the mercury in the metal container, which is insulated from the bottom of the main tank; and also the positions of the starting rod or anode and one of the main A.C. anodes. The rest of the main anodes are not shown in this view.

Note the barrier provided around the lower end of the main anode to prevent flashovers during unusual operating conditions. This view also shows the separation between the inner and outer tanks,

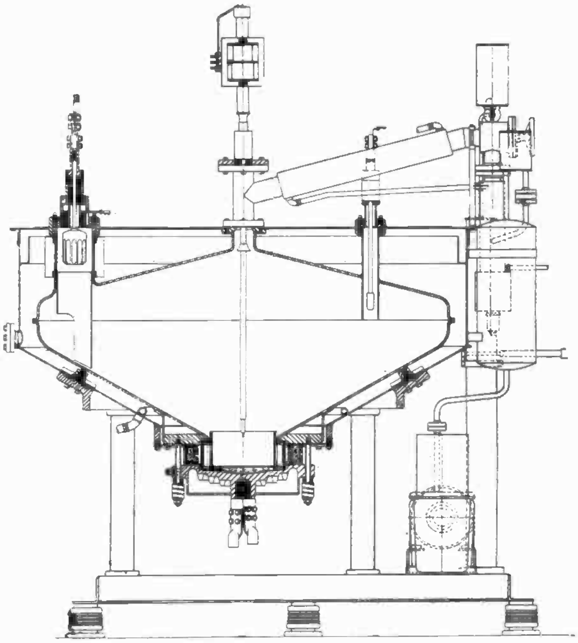

Cross Section of 1000-kw., 600-volt Rectifier

Fig. 241. This diagram shows a sectional view of a six-phase, mercury arc rectifier. Note the small pool of mercury which forms the cathode beneath the starting electrode.

the manner in which the tanks are mounted on insulated bases, and the connection of the positive D.C. lead to the bottom of the rectifier.

The small anode shown on the right is one of the exciter anodes used for maintaining the arc during the removal of the D.C. load. On the right in this figure is shown also some of the auxiliary vacuum-pump equipment.

Fig. 242 shows a sectional view of another rectifier of slightly different construction. This rectifier and the one shown in Fig. 241 are made by different manufacturers but they both operate on the same general principle. This view shows one of the main anodes on the left and one of the smaller exciting anodes on the right.

261. CONNECTIONS AND CIRCUITS

Fig. 243 shows the starting and exciting circuits only for a mercury-arc rectifier such as made by the American-Brown Boveri Company, and Fig. 244 shows both the excitation circuit and the main power-circuit through a rectifier of this type.

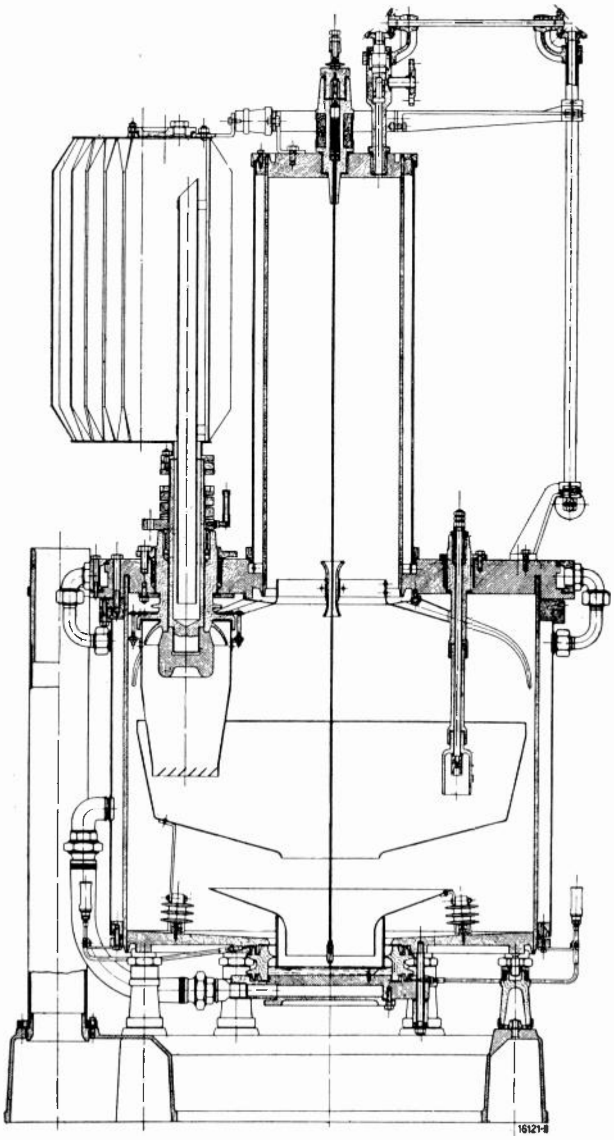

Section through Brown Boveri mercury-arc power rectifier.

Fig. 242. Sectional view of another type of six-phase, mercury arc rectifier showing one of the main anodes on the left and one of the smaller exciter-anodes on the right. The ignition anode or rod is shown in the center.

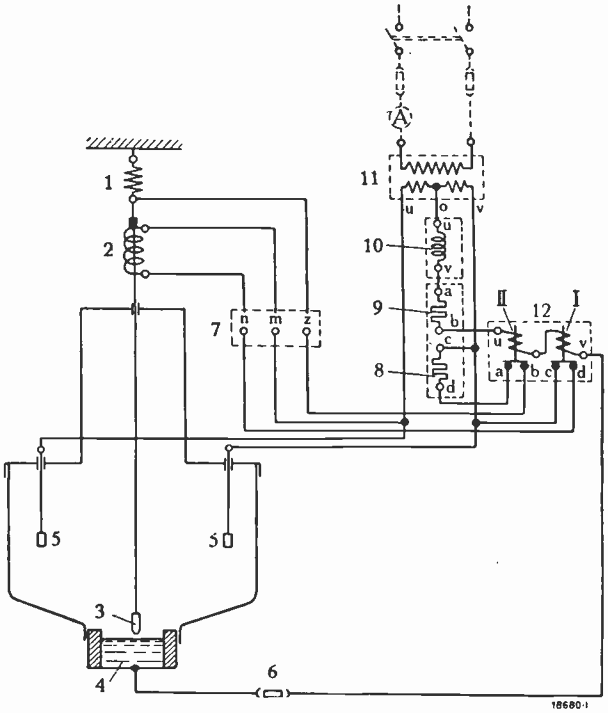

Connections of the ignition device for alternating current.

1. Spring.
2. Ignition coil.
3. Ignition anode.
4. Cathode.
5. Excitation anode.
6. Fuse.
7. Terminal board on rectifier.
8. Ignition resistance.
9. Excitation resistance.
10. Excitation choke coil.
11. Excitation transformer.
12. Relay casing.

I and II. Relays.

Fig. 243. Connection diagram for a single-phase, full-wave, mercury arc power rectifier. (Courtesy American Brown Boveri Co.).

You will note that the transformer secondaries are divided in two sections each, and have the six-phase A.C. leads taken from the respective ends of each of these sections.

The opposite ends of each winding are connected together to one common point and then to the negative or grounded D.C. bus. The positive D.C. bus is connected through a circuit-breaker to the bottom of the rectifier tank and to the cathode, or mercury pool.

Fig. 245-A shows a simple schematic diagram of the power-circuit connections for a three-phase mercury-arc rectifier. The primary of the transformer is connected delta to the A.C. supply. The secondary is connected star, with one end of each phase-winding connected to its respective anode of the rectifier unit. The center or neutral point of the star connection is taken through a resistor unit R and a reactor or inductance coil L, to the negative D.C. lead. The positive D.C. lead connects to the mercury pot of the rectifier.

Fig. 245-B shows the connections for a six-phase rectifier-transformer primary, connected three-phase delta to the A.C. supply; and the secondary windings are connected six-phase star to the mercury arc rectifier.

Another connection sometimes used is the triple single-phase connection shown in Fig. 245-C. This connection uses the opposite ends of each single-phase secondary winding to connect to separate anode terminals and thereby provides six-phase operation of the mercury arc rectifier. The center points of each phase of the secondary winding are connected through reactors to a common or neutral terminal which in turn is connected to the negative D.C. bus.

Fig. 246 shows a diagram of the connections for a six-phase rectifier, including the main A.C. and D.C. power circuits, ignition and excitation circuits, etc. Trace out this diagram carefully and observe the descriptions which are printed in the diagram for the various parts.

Wiring Diagram of a Rectifier Plant

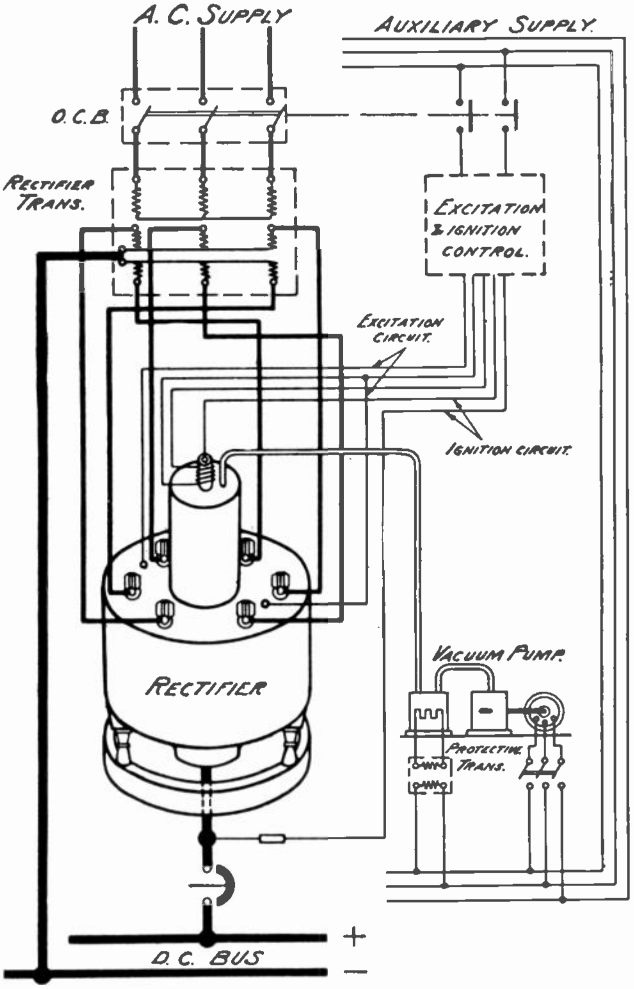

Fig. 244. Wiring diagram showing the power and auxiliary circuits for a six-phase mercury arc power rectifier. (Courtesy American Brown Boveri Co.).

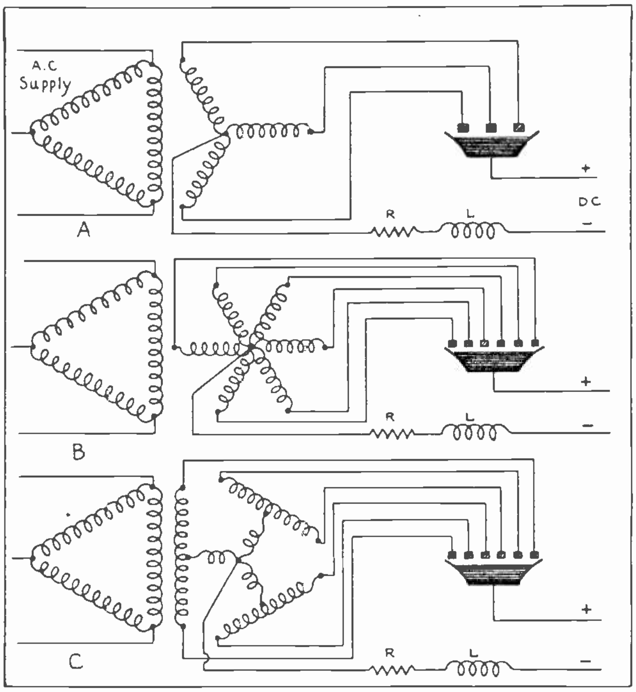

Fig. 245. The above diagrams show three different types of transformer connections which are commonly used with three-phase and six-phase mercury arc rectifiers.

262. VOLTAGE, EFFICIENCY AND POWER FACTOR

There are numerous other connections that can be used to obtain three-phase or twelve-phase operation of these rectifiers. The reason for commonly using six-phase connections to these units and sometimes twelve-phases, is because the greater the number of phases used, the more frequent will be the impulses of rectified D.C.

This reduces the amount of fluctuation and smooths out the voltage of the D.C. supply. The

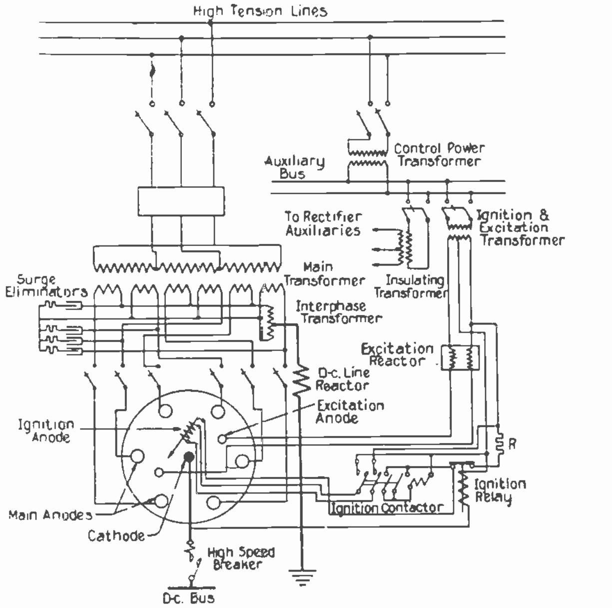

Fig. 246. Wiring diagram of a six-phase rectifier showing transformer connections and auxiliary control circuits. (Courtesy American Brown Boveri Co.).

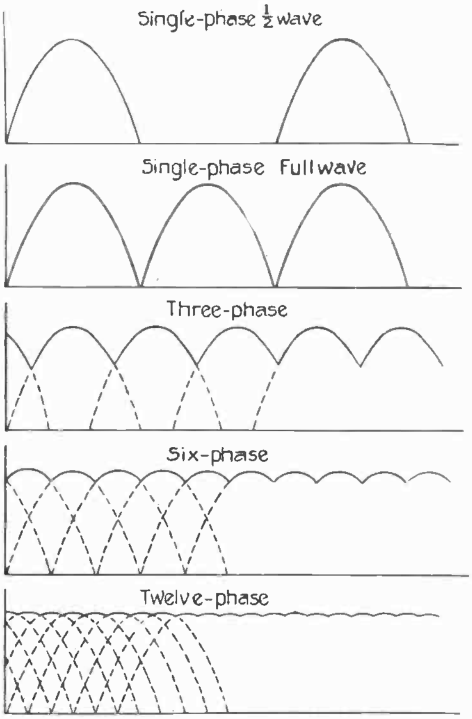

Comparison of Ripple in D.C. Output for Various Number of Phases

Fig. 247. These sine wave diagrams show the amount of pulsation or ripple in rectified D.C. from units operating on different numbers of phases. Note the much smoother voltage curve obtained with the six and twelve phases.

reactance coils which are used in series with the D.C. leads also serve to choke down the ripples or pulsations and thereby smooth out the voltage wave. Fig. 247 shows the differences between the D.C. voltages of 1, 3, 6, and 12-phase units.

Fig. 248 shows a bank of five 1200-kw., 600-volt, manually-operated mercury-arc rectifiers. Mercury-arc rectifiers have a number of decided advantages, such as high efficiency, high power-factor, absence of moving parts to wear out, and very quiet operation.

Power rectifiers of the type just described have efficiencies ranging from 90 to 97 per cent. and power factors which range from 75 to 95 per cent. at the various loads.

Fig. 249 shows the efficiency curves of several rectifiers designed to operate on different voltages. These curves show the variations in efficiency from below 25% to over 150% of the rated load of the units.

The higher efficiencies of mercury arc rectifiers are obtainable only with those designed for operation at above 400 volts. Below this voltage synchronous converters are more efficient.

Fig. 250 shows the power-factor curve of a rectifier and shows the variation in the power factor from under 25% up to 150% load. You will note that the power factor increases gradually with the

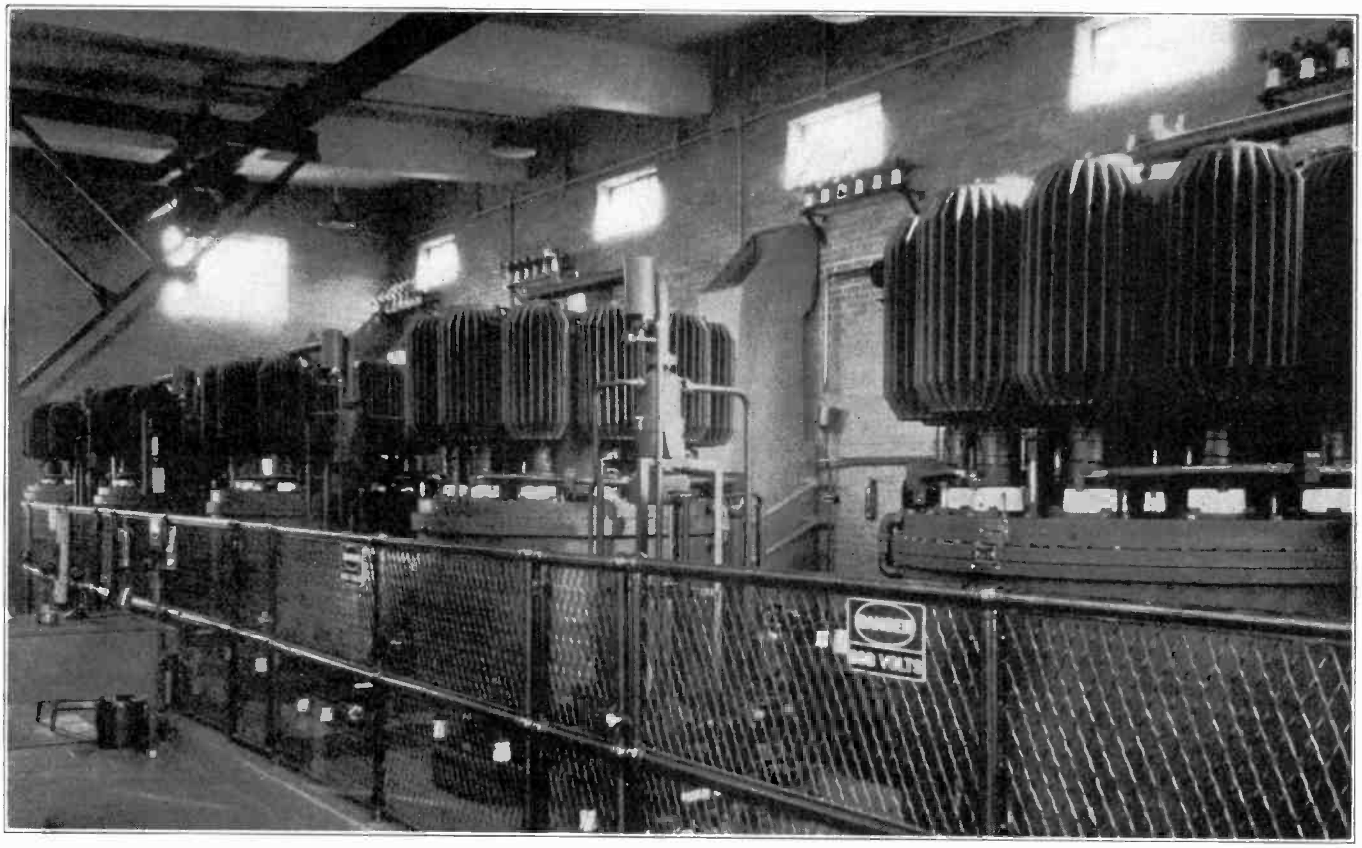

Fig. 248. Five 1200-kw., 600-volt, mercury arc power rectifiers in use in a sub-station. This station has a capacity for producing 6000 kw. of rectified D.C. from the alternating current supplied. (Photo courtesy American Brown Boveri Co.)

load, from 25 to 75 per cent. of the rated capacity of the unit, and from this point on up. The power factor is practically constant at 95%.

These rectifiers are not as seriously affected by short circuits on the D.C. leads as are rotary convertors and motor-generators, which are used for the same purpose; that is, changing A.C. to D.C.

The output-voltage of mercury arc rectifiers with common connections can be determined from the following ratios:

single-phase — 2 anodes — .636
three-phase — 3 anodes — .827
quarter-phase — 4 anodes — .900
six-phase — 6 anodes — .955

The figures given are the ratio of the average D.C. pulsating voltage output to the maximum A.C. voltage input. For example, if we apply 100 volts A.C. to a six-phase unit, the D.C. voltage will be 100 × .955, or 95.5 volts.

The greater the number of phases, the higher is the D.C. output voltage.

263. OPERATION AND CARE

If the pressure of the mercury vapor in these rectifiers is allowed to become too high, the rectifier will have a tendency to **arc back**, or lose its valve action or rectifying property, allowing current to flow in either direction.

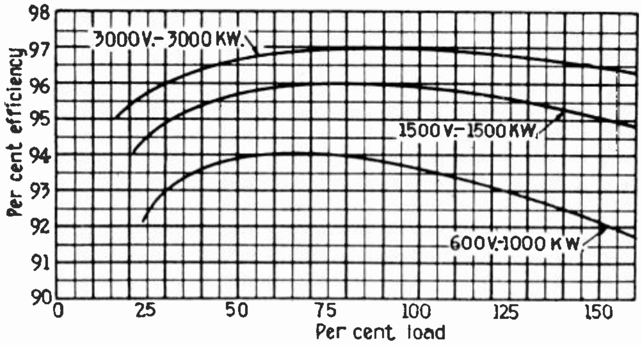

Over-all Station Efficiencies for Rectifiers for 600, 1500, and 3000 Volts

Fig. 249. The above curves show the efficiencies of mercury arc power rectifier stations operating on different voltages and at different percentages of rated load.

Power-factor of Rectifier at Various Loads

Fig. 250. This curve shows the power factor of a mercury arc rectifier at various percentages of its full rated load.

If the pressure becomes too low, the voltage drop through the arc becomes excessive.

For these reasons it is very important in operating mercury arc power rectifiers to maintain the proper temperature for condensation of the vapor, by proper adjustment of the cooling water and to maintain proper vacuum by means of the vacuum pump.

The water and vacuum pumps are often controlled automatically by means of temperature and pressure relays.

When the units are manually operated the pressure and temperature gauges should be carefully watched and the proper adjustments made, in order to secure satisfactory operation.

Mercury arc rectifiers can be operated in parallel with each other or in parallel with synchronous converters by the use of the proper reactors and resistance units to obtain the proper voltage regulation and division of load currents.

SYNCHRONOUS CONVERTERS

A synchronous converter is a rotating machine used for changing A. C. to D. C. In construction these machines are a sort of combination of a D. C. generator and an A. C. synchronous motor of the revolving-armature type.

Synchronous converters always have stationary field poles, and their fields are constructed the same as those of D. C. generators. A few converters are made with shunt field-windings only, but the great majority of commercial machines have compound field-windings, the same as compound D. C. generators.

Converter armatures have one ordinary winding the same as the winding used in a D. C. generator. These windings can be connected to the commutator bars either lap or wave, although most synchronous converters use lap windings.

In addition to the connections which are made to the commutator bars, converter armatures also have taps taken at equally spaced points around the winding and leading to the collector rings, which are generally placed on the opposite end of the shaft from the commutator.

Fig. 251 shows a modern synchronous converter. In this photo the commutator and D. C. brushes are on the left and the slip rings and A. C. brushes are on the right. The end of the armature winding can be seen extending from the right side of the opening between the field poles.

You have already learned that the voltage generated in an ordinary winding when it is revolving in the flux of field poles can be taken off to the line in the form of either D. C. or A. C., by means of either a commutator or slip rings.

If the armature of a synchronous converter is driven by mechanical power, the machine can be used as either a D. C. or A. C. generator, or both.

Direct current can be taken from the brushes on the commutator, and three-phase alternating current from the brushes on the slip rings of a machine such as shown in Fig. 251; or both D. C. and A. C., up to the capacity of the armature winding, can be taken from these machines when driven by mechanical power.

As a motor, this machine can be operated either by D. C. or A. C. If direct current of the proper voltage is applied to the brushes on the commutator, the machine will run as a D. C. motor; or if three-phase A. C. is applied to the slip rings, it will run as a synchronous motor with a stationary field and revolving armature.

Most synchronous converters are operated from A. C. and produce D. C., although in some cases they are supplied with D. C. and change it to A. C.

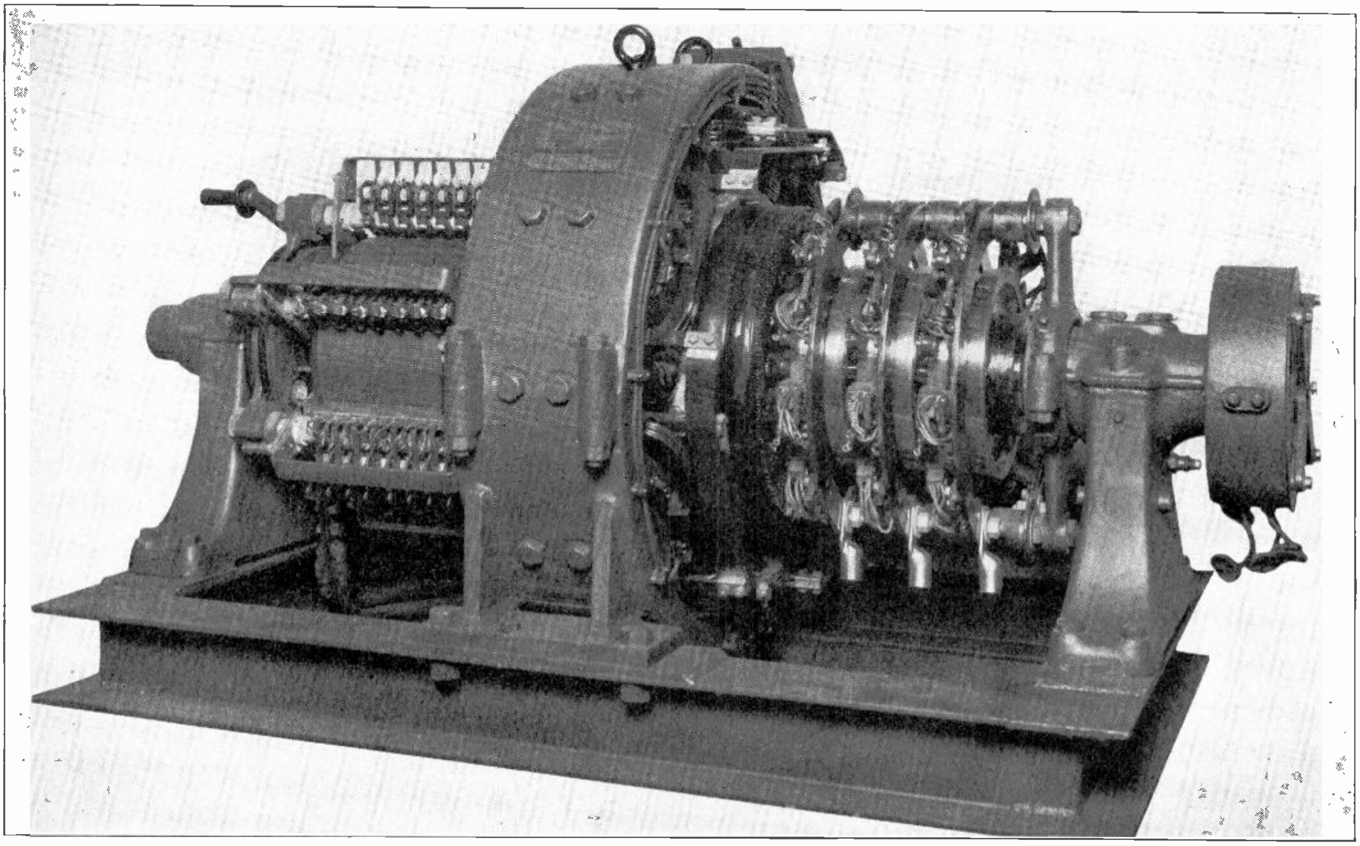

Fig. 251. The above photo shows an excellent view of a modern synchronous converter used for changing A.C. to D.C. The commutator and D.C. brushes are shown on the left and the slip rings and A.C. brushes on the right. Also note the armature, and the shunt and series windings on the field poles. The device on the right-hand end of the shaft is an overspeed safety switch. (Photo courtesy General Electric Co.).

When used in this manner they are called **inverted rotary converters.**

264. CONSTRUCTION

Fig. 252 shows another synchronous converter and gives a better view of the D. C. end. The field poles with their shunt and series windings can be plainly seen in this view, and you will note that this machine is also provided with interpoles to improve commutation on the D. C. end. The D. C. brushes are provided with **arcing shields** or **flash barriers** to prevent flash-overs between the positive and negative sets of brushes in case of short circuits or severe overloads on the machine.

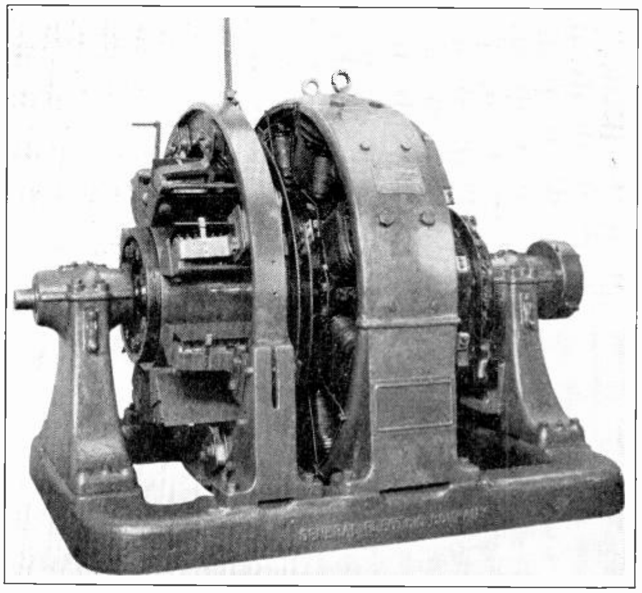

Fig. 252. D.C. end of a large synchronous converter showing brush-lifting mechanism, and flash barriers around the brushes. (Courtesy General Electric Co.).

Fig. 253 shows the field frame and poles of a synchronous converter with the armature removed. In this view you may note the damper winding which is built into the faces of the field poles. This winding is used both in starting the machine as an induction motor and to prevent hunting during operation.

Fig. 254 shows the armature of a 500-kw. rotary converter which is equipped with six slip rings on the A. C. end for operation on six-phase A. C. The commutator of this machine, being rather long in order to accommodate the necessary brushes and carry the large amounts of direct current, is equipped with a banding ring in the center, to hold the bars in place against the action of centrifugal force.

265. OPERATING PRINCIPLES

When alternating current of the proper frequency and voltage is applied to the slip rings of a synchronous converter this excites the armature winding with A. C. and sets up a revolving magnetic field around the armature. This field induces secondary currents in the squirrel-cage damper winding, and the reaction between the flux of these secondary currents and the flux around the armature conductors sets up torque and causes the machine to start as an induction motor.

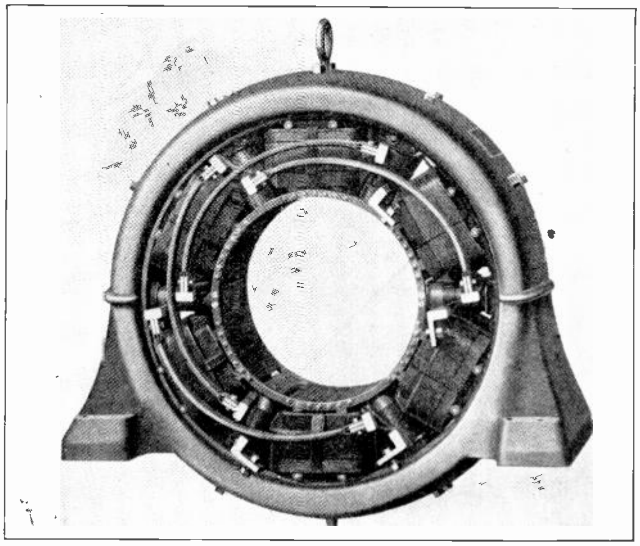

Fig. 253. Side-view of the field of a synchronous converter. Note the squirrel-cage damper winding in the faces of the main poles and also the interpoles located between the main poles. (Courtesy Allis-Chalmers Mfg. Co.).

When the armature comes up to nearly synchronous speed, the D. C. field poles are excited and the machine then pulls into step and operates at synchronous speed, the same as any synchronous motor. Direct current can now be taken from the brushes at the D. C. end.

From this description alone one might conclude that the machine operates purely as a motor-generator, using alternating current to drive the motor and thereby generating D. C. in the windings. This, however, is not the case, as synchronous converters have their armature windings supplied with A. C. which is already generated at the proper voltage. This current merely passes through the windings to the D. C. end, where it is commutated or rectified into D. C.

A small amount of the energy derived from the alternating current is used up in overcoming the friction and losses in the machine, but by far the greater part of the A. C. energy is simply passed through the armature winding from one end to the other and commutated into D. C. at the D. C. end.

For this reason commutators on converters are much larger than those on D. C. generators of the same armature size.

The voltage at the D. C. end of a synchronous converter is generally a little higher than the A. C. energy supplied, because the current in passing through the few turns which it does in the armature winding has a little generated voltage added to it as the armature conductors revolve through the flux of the D. C. field poles. But it is much better to think of a synchronous converter merely as a synchronously-driven commutator, instead of considering it as a motor-generator set.

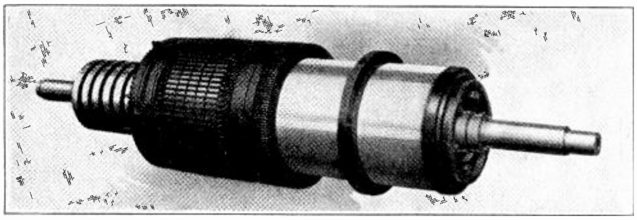

Fig. 254. Photo of converter armature clearly showing the armature winding, slip rings and commutator. A.C. enters at the slip rings and D.C. is taken off from the commutator when this armature is revolved at synchronous speed in the flux of D.C. field poles. (Courtesy Allis-Chalmers Mfg. Co.).

Converter armatures do not require as many turns as would a D. C. generator to produce the same D. C. voltage. This is because the alternating current supplied to the A. C. end of the armature from the line or power plant generators is already at quite high voltage.

For this reason converters do not have as great an armature resistance or copper loss as motor-generators do and therefore converters operate at much higher efficiency. This is one of the reasons for their very extensive use in substations supplying D. C. to electric railways or for industrial power purposes.

A three-phase synchronous converter will develop only 59% of the heat produced in a D. C. generator of the same capacity, and a converter of a given size will have 131% of the capacity of a D. C. generator of the same size. A six-phase converter develops only 27% of the heat and has 194% of the capacity of a D. C. generator of the same size.

266. CHARACTERISTICS

As converters of this type operate at synchronous speed, their A. C. characteristics are similar to those of a synchronous motor, and the power factor of synchronous motors under ordinary operating conditions is very high.

The efficiency of these machines is best when they are operated at unity power factor. If desired they can be operated at leading power-factor by over-exciting the field poles, and in this manner they can be made to correct the power factor of the A. C. lines.

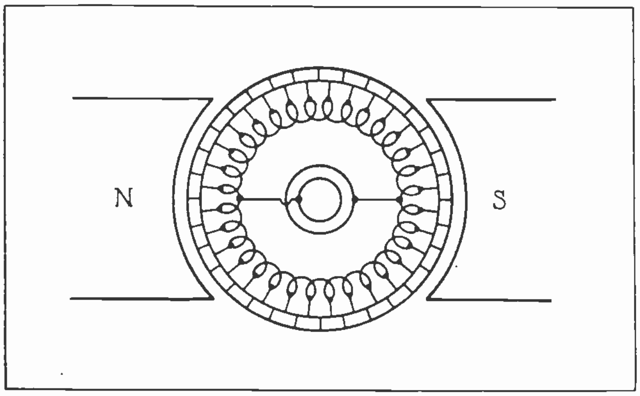

Fig. 255. Diagram of the armature connections for a simple two-pole, single-phase, synchronous converter. Note that the slip ring connections are taken at points 180 electrical degrees apart on the winding.

As the efficiency and desired characteristics of synchronous converters fall off very rapidly when they are operated at less than 90 or 95 per cent. power factor either leading or lagging, these machines are not generally used to perform much power factor correcting duty.

As most motors, generators, and converters operate a greater part of the time at about 75% load, synchronous converters are usually designed and adjusted for 100% power factor at three-fourths of their rated load. This provides very good operating characteristics at loads from about half to full load.

267. ARMATURE CONNECTIONS

Some small converters are made for single-phase operation but most of them are designed for operation on either three or six-phase A. C. circuits. A greater number of the larger sizes and modern power converters are operated on six-phase A. C.

Fig. 255 shows a diagram of the armature connections to the commutator and slip rings of a two-pole, single-phase, synchronous converter. Note that the connections from the A. C. rings to the armature windings are made diametrically opposite, or at points 180 electrical degrees apart on this two-pole machine.

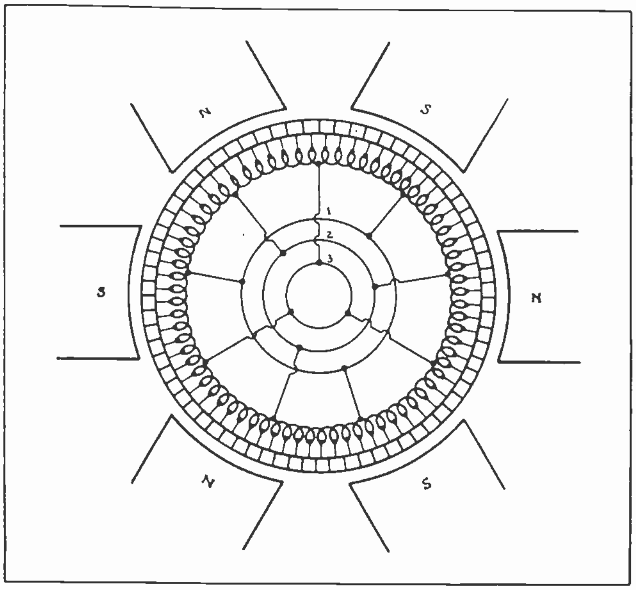

Fig. 256. Diagram of armature connections for a six-pole, three-phase, synchronous converter. The slip ring connections for each phase are taken at points 120 electrical degrees apart.

Fig. 256 shows the connections for a six-pole, three-phase converter. This machine has three slip rings, one for each phase, and each ring has as many connections to the winding as there are pairs of field poles. These connections to the same ring are made at points 360 electrical degrees apart, so that they come under the same positions under like poles throughout the entire machine.

Examine this carefully on the connections shown to ring No. 1. Now checking around the winding clockwise we find that the connections to ring 2 are taken at points 120 electrical degrees from those to ring 1. The same applies to the taps or connections for ring 3, which are taken at points 120 electrical degrees from those of ring 2.

A good rule to remember in connection with the A. C. taps to a synchronous converter armature winding is as follows:

There are taken from the armature winding to each slip ring as many equally-spaced taps as there are pairs of poles.

On single-phase machines the taps to each ring are always made 180 electrical degrees apart on the armature winding, or the distance between the center of a north pole and the center of the adjacent south pole. On three-phase machines the taps to each separate ring are taken at points 120 electrical degrees apart. On six-phase machines these taps are taken at points 60 E° apart.

Fig. 257 shows the armature connections for a six-pole, six-phase converter.

268. FIELD CONNECTIONS

Converters with compound field-windings have the usual shunt winding, consisting of a large number of turns of comparatively small wire wound next to the core on each pole.

The series winding generally consists of a very few turns of large cable or copper bars wound around the outside of the pole or over the shunt winding. The series coils are connected in series with the D. C. brushes and load, so that the compounding effect will be proportional to the load at all times.

On machines which have interpoles or commutating poles these are also connected in series with the D. C. brushes and load. The shunt field coils can be connected either in series or parallel, or grouped into series-parallel combinations according to the voltage applied and the resistance of their windings.

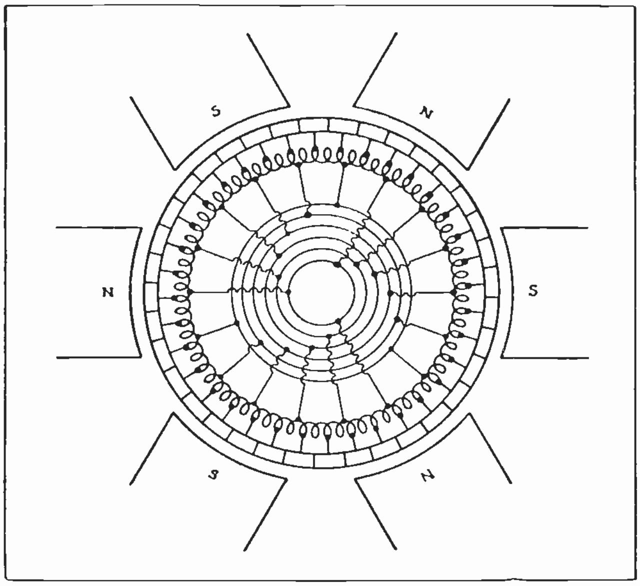

Fig. 257. Diagram showing the armature connections for a six-pole, six-phase, synchronous converter. The connections of the different phases of this winding are made 60 electrical degrees apart.

The shunt field coils are often connected to a **field break-up** switch which when opened separates the connections between the shunt field coils to prevent the induction of very high voltages during starting of the converter as an induction motor. See Figs. 260 and 262.

If these shunt field coils were left connected in series, dangerously high voltages would be induced in this circuit by transformer action when the alternating current is first applied to the armature and during the starting period when the slip is greatest and the frequency of the alternating flux is highest.

This flux from the armature cuts across the field windings at full line frequency during the first period of starting, but when the armature comes up to synchronous speed there is no longer any slip and therefore very little voltage is induced in the field windings from the armature flux during normal operation.

269. FIELD EXCITATION

The field poles usually receive their excitation from the D. C. brushes of the converter, although in some cases small separate exciter-generators are used. These separate exciters, when used, serve as a protection against the converter building up with wrong polarity when started, and also as a protection against dangerous overspeeding which might otherwise occur in case of a D. C. feed-back during failure of the A. C. supply to the slip rings.

When a number of converters are operated in parallel, if the A. C. supply to one machine is interrupted this causes the D. C. voltage of that machine to drop, and the other converters will then feed direct current in the reverse direction through the armature and the series field and cause this one machine to operate as a differential D. C. motor.

Reversing the current through the series field greatly weakens the field by this **differential action** and will tend to cause the **converter to overspeed dangerously** and possibly wreck the armature and commutator by centrifugal force, if the machine is not immediately disconnected from the D. C. circuit.

When the converters are equipped with separate exciters driven by the main armature shaft, the exciter also speeds up with any increase in armature speed and thereby strengthens the shunt field, which helps to keep the speed of the converter down.

Synchronous converters are usually equipped with an overspeed contact device which is attached to the end of the armature shaft. In case the machine overspeeds, centrifugal force causes a small weighted arm to fly outward and close a circuit to a relay, which trips the main D. C. breaker, thus stopping the back feed of direct current to the armature. The box or casing which contains this overspeed device can be clearly seen in Figs. 251 and 252.

270. EFFECT OF FIELD STRENGTH ON VOLTAGE AND POWER FACTOR

The strength of the shunt field of synchronous converters is generally controlled by means of a rheostat placed in series with one of the D. C. supply leads to the field coils.

By adjusting the strength of the field with the shunt-field rheostat the D. C. output voltage of the converter can be varied within a very limited range. The shunt-field rheostat is more commonly used, however, for adjusting the power factor of the machines. The effect on the power factor is the same as that obtained by the field rheostat on synchronous motors.

When the field strength is increased the power factor is advanced from lagging toward unity, and if the field is overexcited the machine can be made to develop leading power factor.

271. CONTROL OF D. C. OUTPUT VOLTAGE. VOLTAGE RATIOS

The adjustment of the D. C. output voltage of synchronous converters over any considerable range is generally accomplished by means of voltage regulators or tapped transformers on the A. C. side, or by means of a D. C. booster generator attached to the same shaft and connected in the D. C. circuit. A. C. booster converters or generators are also often used in series with the A. C. supply.

The D. C. output voltage of synchronous converters depends almost entirely on the applied A. C. voltage and upon the type of armature connections used.

In a single-phase converter the D. C. voltage is equal to the maximum value of the applied A. C. voltage.

For example, if 100 volts A. C. is applied to the slip rings, the D. C. voltage at the brushes will be equal to $\frac{100}{.707}$, or 141.4 volts.

The ratios of A. C. to D. C. voltages which are obtained with different converter connections are as follows:

Connections	Ratio of A. C. to D. C. voltage
One-phase	.707
Two-phase diametrical	.707
Two-phase adjacent taps	.5
Three-phase	.612
Six-phase diametrical	.707
Six-phase adjacent taps	.354

The three-phase and six-phase diametrical connections are the ones most commonly used in power converters. To determine the D. C. voltage output of a three-phase machine we simply divide the A. C. voltage applied to the slip rings by the figure .612.

For example, if 370 volts A. C. is used to operate the converter, we will obtain $\frac{370}{.612}$, or approximately 604 volts D. C.

If we apply 440 volts A. C. to a six-phase diametrical converter, we will obtain $\frac{440}{.707}$, or approximately 622 volts D. C.

272. TRANSFORMER CONNECTIONS TO CONVERTERS

Synchronous converters are designed and insulated for the voltages at which they are intended to operate, and the proper A. C. voltages for application to their slip rings are usually obtained by means of step-down transformers. The A. C. power is usually sent from the power plants over transmission lines of rather high voltage.

Fig. 258-A shows the transformer connections for a simple two-pole, single-phase converter. The taps are connected to the armature 180 electrical degrees apart, as previously explained.

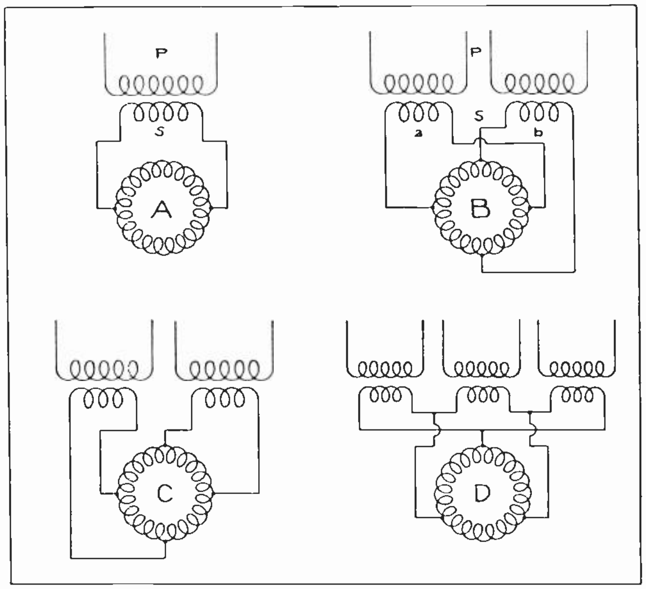

Fig. 258. A. Transformer connections for a single-phase converter. B. Transformer connections for a two-phase, diametric converter. C. Transformer connections for a two-phase, adjacent tap converter. D. Transformer connections for a three-phase converter. The armature connections in all of the above diagrams are for two-pole machines.

Fig. 258-B shows the transformer and the armature tap connections for a two-pole, two-phase diametrical connection. The opposite leads of each phase of the transformer secondaries are connected diametrically opposite, or 180 electrical degrees apart, on the armature winding.

In these simple diagrams the connections are shown made directly to the armature winding, while on the actual machines the transformer leads of course go to the brushes on the slip rings, and the rings connect to the armature winding.

Fig. 258-C shows a diagram of the transformer and armature connections for two-phase adjacent

taps. In this connection the opposite ends of each phase of the transformer secondaries are attached to the winding at points 90 E° apart.

Fig. 258-D shows the connections for a two-pole, three-phase converter armature, with the leads of the delta-connected transformer secondaries tapped on the winding at points 120 E° apart.

Fig. 259-A shows the connections for a two-pole, six-phase converter with the transformer secondaries connected to the armature winding six-phase diametrically. Note that the starts, or left-hand leads of the transformer secondaries, connect to the converter winding at points 120 E° apart; and the finishes, or right-hand secondary leads, connect 180 electrical degrees apart or diametrically opposite on the armature winding from the point where the starts of these same secondaries connect.

On machines with more than two poles this series of connections would be repeated for each 360 E° or the space covered by each pair of poles. So there would be as many A connections to each slip ring as there are pairs of poles; also as many C connections, etc.

Fig. 259-B shows the connections for a two-pole, six-phase converter using the six-phase adjacent tap system of connecting the transformer leads to the winding.

Fig. 259-C shows the connections for a six-phase, double-star-connected converter.

Fig. 260 is a diagram of a four-pole synchronous converter and shows the D. C. connections to the brushes on the commutator, the A. C. connections to the brushes on the slip rings, and also the field "break-up" switch which is used to break-up the shunt field circuit during starting of the machine.

The connections for a shunt-field rheostat are also shown in this diagram. The series field and commutating field are not shown in this figure; but when they are used they are connected in series with one of the D. C. leads.

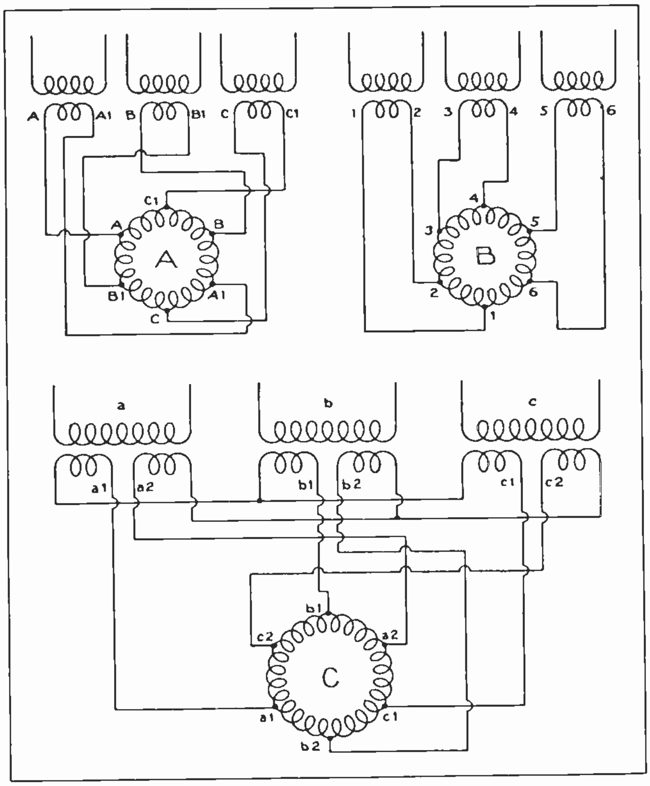

Fig. 259. A. Transformer connections for a six-phase, diametric converter. B. Transformer connections for a six-phase adjacent tap converter. C. Transformer connections for a six-phase, double star-connected converter. Each of these diagrams show the connections for a two-pole machine.

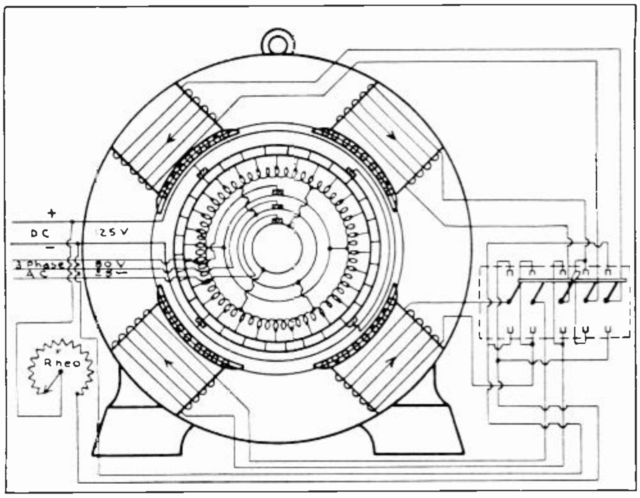

Fig. 260. Wiring diagram showing armature and field connections, and also the field break-up switch and rheostat for a four-pole, three-phase converter. Trace out the field circuit both with the switch in the upper and lower positions and note that the polarity reverses when the switch is changed.

273. STARTING SYNCHRONOUS CONVERTERS

Synchronous converters may be started in several different ways, three of which are as follows: 1. By applying reduced A. C. voltage to the armature and starting the machine as a synchronous motor. 2. By applying reduced D. C. voltage to the armature and starting the machine as a D. C. motor. 3. By using a starting motor to bring the armature up to the proper speed before synchronizing with the A. C. line.

The first method mentioned is by far the most commonly used and is so similar to the method previously explained for starting synchronous motors that it doesn't require much additional explanation here.

Reduced A. C. voltage, generally about 50% of the normal operating voltage, is applied to the armature at the slip rings. This causes alternating current to flow through the armature winding and sets up a revolving magnetic field which induces secondary currents in the damper winding which is mounted in the faces of the field poles.

The reaction between the flux of these secondary currents and that of the armature conductors causes the machine to start as an induction motor. The reduced voltage for starting can be obtained from an auto transformer but it is more often obtained from an extra set of leads which are brought out from the center taps in the middle of each phase of the transformer secondary windings, as shown in Fig. 261.

When the three-pole, double-throw starting switch is thrown to the upper position, the left-hand leads and center taps of each transformer secondary are connected to the slip rings and supply only half voltage to the converter-armature. When the machine has reached approximately full speed the switch is thrown quickly to the lower position to apply full voltage to the armature. Carefully trace the circuits from the transformers and starting switch to the converter rings in Fig. 261.

In modern substations magnetically-operated remote control circuit-breakers or contactors are used instead of the hand-operated knife switch. One set of these contacts opens the circuit to the starting taps just a fraction of a second before the other set closes the circuit to the full voltage taps, thus performing the switching operation very quickly.

274. BUILDING UP D. C. VOLTAGE

If the D. C. voltmeter indicates that the polarity on the D. C. end of the converter has built up in the right direction when the machine comes up to speed, the D. C. circuit-breaker can be closed to the D. C. busses and load as soon as the converter is running at full speed and full voltage.

In case the converter is operating in parallel with others it is necessary to see that its voltage is properly adjusted for paralleling before closing the D. C. breaker. It is also necessary to close the equalizer switch before paralleling a compound converter.

A synchronous converter when started from the A. C. side in the manner just described will often build up voltage with the wrong polarity at the D. C. brushes. This polarity which will be built up depends upon whether the converter-armature pulls into step on a positive or negative alternation.

So, with some machines the polarity is just as likely to be built up wrong as to build up right.

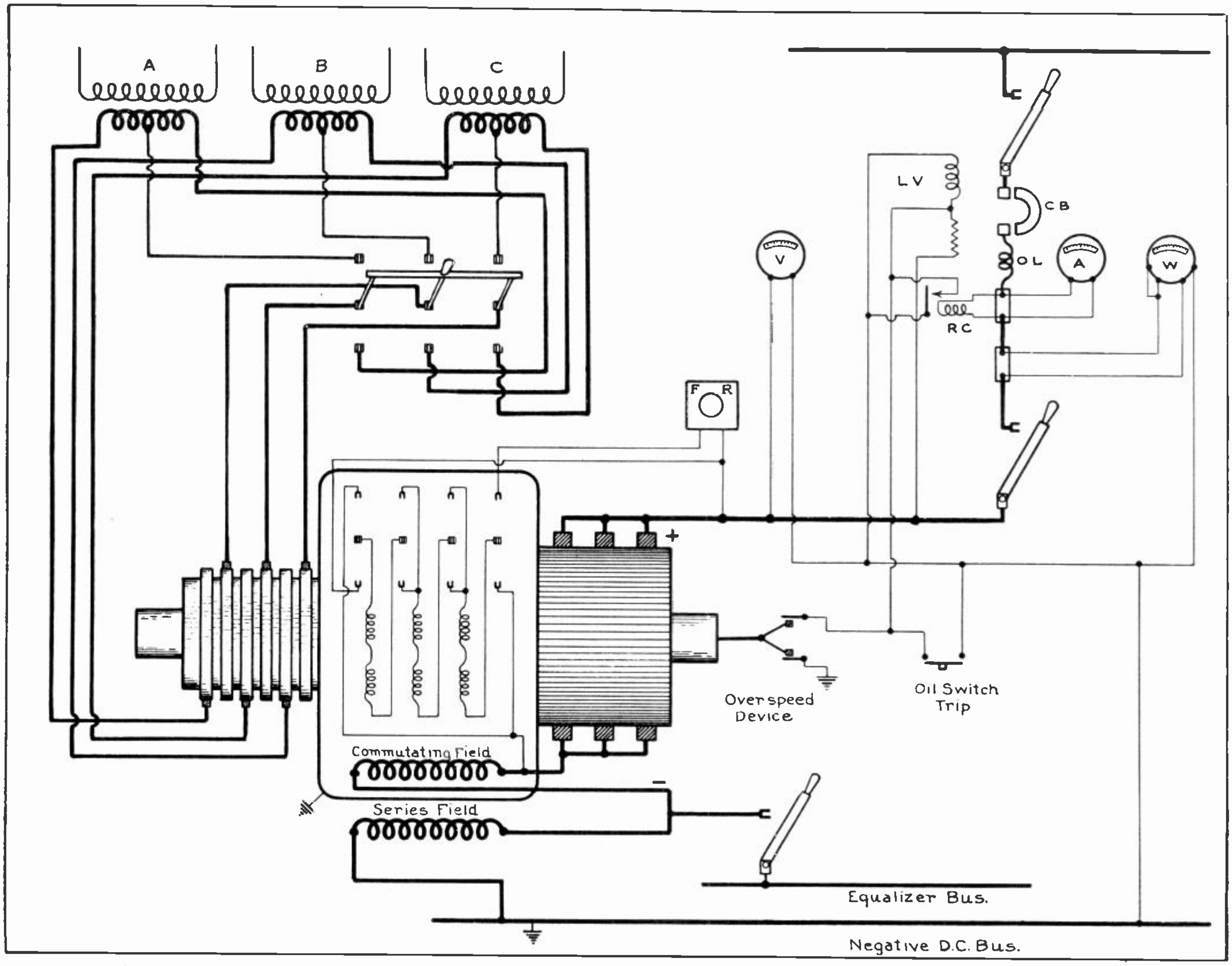

Fig. 261. This diagram shows the connections of the transformer secondaries to the A. C. slip rings of a six-phase, synchronous converter, and also shows the starting switch used for obtaining half voltage to start the machine from the A. C. end. Note the connections of the shunt field windings to the field break-up switch and rheostat, and also the connections of the commutating and series field windings to the equalizer bus and negative D. C. bus. The equalizer bus will be used only in case the machine is operating in parallel with other converters. Note the low-voltage trip coil, L.V., which will open the circuit breaker in case of voltage failure, and the overload trip coil, O.L., which will open the breaker in case of D. C. overload. The reverse current relay, R.C., will short-circuit the low-voltage trip coil and open the breaker in case of a D. C. feed-back to the converter.

Some machines, because of certain characteristics in their design, will nearly always build up with right polarity while others will almost always build up the wrong polarity. This polarity must, of course, be corrected before the converter can be connected to the busses or trolley in parallel with any other machines.

275. CORRECTING POLARITY

Several of the more common methods of correcting this polarity are as follows:

(a) "flashing" the field
(b) separate excitation
(c) field-reversing switch
(d) strengthening field at the instant of correct polarity.

"Flashing" the field consists of sending D. C. in the correct direction through the shunt-field winding when the converter is nearly up to full speed. This causes the armature to pull into step at the right field poles.

If the polarity has been built up wrong flashing the field will cause the armature to slip back one pole thus causing the converter to reverse polarity. The converter will then properly excite its own field from the commutator and brushes.

The direct current for flashing the field is generally obtained from a small constant-polarity motor-generator which is usually not over 1 to 5 kw. in size.

Converters which are separately excited from a small D. C. generator on the shaft of the main unit or from a small motor-generator will practically always build up the right polarity because of the residual magnetism of the poles of these small D. C. generators.

The field break-up switches that are used with synchronous converters are often made double-throw as in Fig. 260, for the purpose of reversing the polarity of the shunt-field poles. Trace the shunt field circuits in Figs. 260 and 261 with the switches in both positions, and note that the current through the field coils reverses when the switches are reversed.

Converters normally operate with this switch in the upward position, but if they build up with wrong polarity the switch can be thrown downward for a short period to reverse the polarity. When this is done the polarity of the field poles becomes the same as that of the magnetic poles set up in the armature directly under them.

This causes a strong repelling action which tends to retard the movement of the armature. This repelling action, windage, and the friction of the brushes on the commutator soon cause the armature to drop back one pole, or 180 electrical degrees.

This reverses the polarity of the D. C. voltage at the brushes and would also reverse the polarity of the field which is connected to these brushes if nothing more were done.

By watching the voltmeter at the time the field-reversing switch is thrown to the lower position you will note that the voltage decreases to zero and then reverses.

At the instant the voltmeter needle passes over the zero point the field-reversing switch should be closed into the upward or running position. This again reverses the field poles, bringing them back to their original polarity and with the polarity at the D. C. brushes now in the right direction to excite the field poles properly.

The whole operation simply causes the armature to slip back one pole and thereby causes the reversal of polarity of the D. C. circuit.

When a converter is approaching synchronous speed the D. C. voltmeter will often oscillate to the right and left of zero, showing a sort of faltering or reversing action of the D. C. voltage just as it starts to build up.

A polarized relay can be connected in the D. C. circuit so that it will close a circuit to the shunt field at the instant the voltage is in the right direction. This will cause the converter to retain the correct polarity.

276. CONVERTER AUXILIARIES

Modern synchronous converters generally have a number of auxiliary devices to aid in securing proper operation and to protect the machine against damage from various causes. Some of the most common of these auxiliary devices are as follows:

1. Field-reversing or break-up switch, which has already been described.
2. Brush lifting mechanism.
3. Armature oscillator.
4. Armature overspeed centrifugal switch.
5. Arc chutes and barriers.
6. Separate exciter or field "flashing" generators, when used.
7. Flash-over relays.
8. Temperature relays.

277. BRUSH LIFTING MECHANISM

When a converter is first started from the A. C. end, the currents flow directly through the low-resistance conductors of the armature and through the circuits which are completed at the commutator by alternate sets of D. C. brushes being connected together.

If these brushes are left on the commutator during starting it results in heavy cross-currents flowing in certain sections of the armature and through the brushes, and this tends to cause severe sparking during the starting of the machine.

For this reason many of the larger machines which have interpoles are equipped with brush-lifting devices, which lift all of the brushes from the commutator except one brush of the positive group and one of the adjacent negative group.

These two brushes are known as **pilot** brushes and they are used to give the D. C. voltmeter polarity readings and to supply the direct current to excite the field for obtaining the correct polarity.

The brush groups are all mechanically connected together by means of a steel cable and operating gear so they can be raised and lowered by means of an operating lever which, in turn, may be either manually or motor operated.

All brushes except the pilot brushes should be raised before starting the converter and they should be lowered as soon as the machine is up to speed and the correct polarity has been established.

278. ARMATURE OSCILLATOR

If the armature and commutator were allowed to run with the brushes at exactly the same position at all times, the brushes would tend to wear grooves and ridges in the surface of the bars. Such wearing increases commutation troubles and makes more difficult the proper care of the commutator and the proper fitting of the brushes.

To avoid the grooving or "tracking" of the brushes on the commutator converters are often equipped with an armature oscillator which keeps the entire armature unit oscillating slightly back and forth endwise so that the brushes will wear evenly over the entire surface of the commutator.

To accomplish this oscillation the converter is set with one end slightly higher than the other so that the armature and shaft tend to slide to the lower end as they rotate.

One type of oscillator uses a steel ball placed between the end of the shaft and a plate which is set at a slight angle as shown in Fig. 262. As the shaft drifts to the lower end it pinches the ball between the shaft end and the plate and causes the ball to rotate or roll around in the direction the shaft turns.

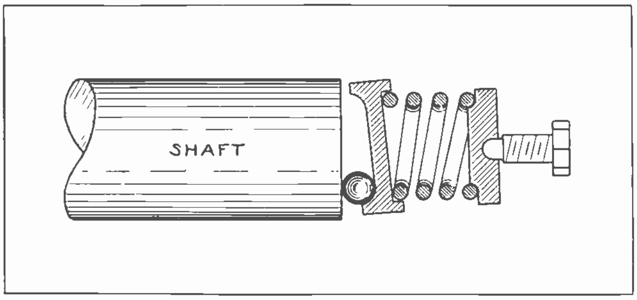

Fig. 262. Diagram showing ball and spring oscillator to cause converter armature to move endwise and promote even wear on the commutator.

This wedges the ball up into the narrower opening between the tilted top of the plate and the shaft end, compressing the heavy spring behind the plate and pushing the shaft and armature back toward the high end of the machine. The ball then drops down and repeats the operation again and again as long as the armature rotates.

Other machines are equipped with a powerful electro-magnet placed near the high end of the shaft, to draw the armature back each time it slips to the low end of the machine.

A set of contacts can be arranged at the low end of the shaft so that they close the circuit to the electro-magnet each time the shaft reaches the end of its oscillation in the low direction.

278. OVERSPEED DEVICE

As previously explained, any synchronous converter will tend to overspeed dangerously if the A. C. supply is interrupted and D. C. is fed into the armature from the trolley or other converters with which it is operating in parallel.

Converter armatures are generally designed and tested to stand only about 50% overspeed. When operated as a differential motor by D. C. feed-back they will quickly exceed a much greater speed than this if some means is not provided to interrupt the D. C. circuit to the armature.

Fig. 263 shows two views of a centrifugal speed-limit device which can be used to either make or break a circuit to trip the main D. C. circuit-breaker, thus stopping the converter when it is operating from the D. C. end.

The revolving element is attached to the end of the converter shaft and if it is revolved at about 25% above normal speed, the weighted pin is thrown outward by centrifugal force against the action of the coil spring, which can be clearly seen in this view.

This causes the end of the pin to strike the toggle or cam on the contact arm, and make or break the operating circuit to the breaker trip coil. Fig. 261 shows the connection of the over-speed switch and the circuit by which it shorts and weakens the low-voltage release-coil, LV, thus tripping the D. C. breaker. Fig. 261 also shows the connections of a reverse current relay, RC, which attracts its polarized armature.

The small hand-lever extending from the case of this overspeed device is for resetting the contacts in normal position before the machine is again started.

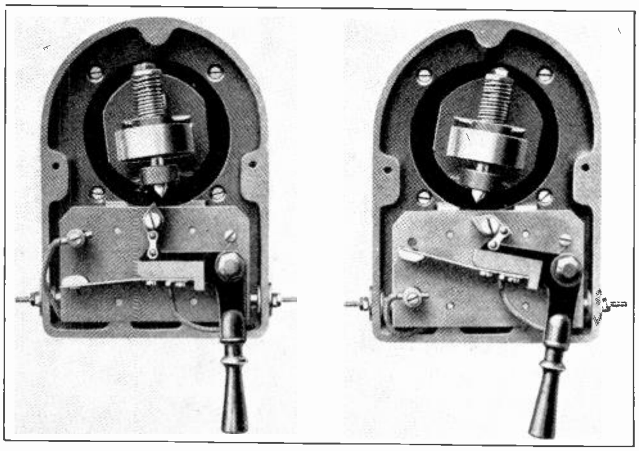

Fig. 263. Two views of a centrifugal overspeed switch showing two possible arrangements of the contact for either an open or closed circuit system.

279. ARC CHUTES AND BARRIERS

When converters are subject to occasional heavy overloads or possible short circuits, the sparking is likely to cause flash-overs or arcs between positive and negative sets of brushes, or between the commutator or brush rigging and the frame of the machine.

Barriers of fireproof insulating material, such as asbestos composition, can be provided around the brush groups and between positive and negative groups. This insulation considerably reduces the tendency to flash-over and helps to extinguish any arcs which may occur in this manner.

Fig. 264 shows a section of a commutator and illustrates the manner in which the arc barriers, B, and arc chutes, C, are placed around and between the brushes.

The lower edges of the barriers around the brush groups clear the commutator by only about 1/32 of an inch, and tend to confine sparking or arcing to the neighborhood of the brush and prevent the arc from travelling around the commutator to the next set of brushes.

The lower edges of the arc chutes are also very close to the surface of the commutator, and the strips of insulating material are set at an angle against the direction of rotation. In this manner they deflect outward the currents of air which tend to follow the surface of the commutator and this helps to prevent the arc from being carried or blown from one set of brushes to the other.

Fig. 252 clearly shows the position of the flash barriers on the D. C. or commutator end of the synchronous converter shown in this photo.

280. FLASH OVER RELAYS AND TEMPERATURE RELAYS

In some cases the frames of converters are insulated by a leatheroid or fiber plate from the floor or base on which they are mounted so that any currents which may flow from the commutator to the frame during a flash-over must pass through the coil of a relay to get to ground.

This causes the relay to operate and cut the machine out of service in case of severe flash-overs. If the flash-overs were allowed to continue they would seriously burn and pit the commutator bars, brush rigging, or parts of the frame from which the arc is drawn.

Synchronous converters are often equipped with temperature relays operated by small tubes of liquid which are placed at different points in or near the windings and are connected to an expansion bellows in the relay.

When the liquid in these tubes is overheated it expands, forcing the bellows to close the relay contacts and operate the circuit-breaker to remove the load from the machine or shut the machine down entirely as desired.

281. AUXILIARY BRUSH FOR BEARING CURRENTS

Sometimes the bearings of converters are seriously damaged and rapidly worn by the flow of induced eddy currents from the armature core and shaft to the bearing metal and frame of the machine.

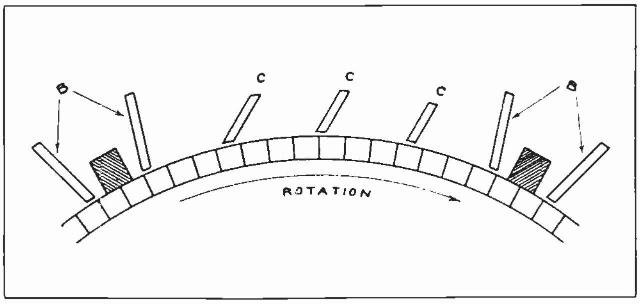

Fig. 264. This diagram shows the position of the flash barriers and arc chutes used to prevent flash-overs between positive and negative sets of brushes on the D.C. end of converters.

The portion of the shaft which rests on the bearings is, if properly lubricated, surrounded by a thin film of oil during operation. When the induced currents arc through this oil film they pit and burn the surface of the shaft and bearing metal.

To prevent this a carbon brush is often mounted to rest on the end of the shaft and then this brush is securely grounded to the frame of the machine with a low-resistance connection. This provides an easier path for the circulation of induced eddy currents and prevents them from flowing through the oil film and pitting the bearings and shaft.

282. CARE AND OPERATION

A great many of the general rules which you have already learned for the care and operation of D. C. generators and A. C. synchronous motors can be applied to the operation and care of synchronous converters. Commutators, slip rings, and brushes should be kept clean and in good condition, and the insulation of windings should also be kept clean and should be occasionally tested for dielectric strength.

Oil rings and oil in the bearings should be frequently inspected, the oil should be changed whenever necessary, and the bearing temperature should be frequently observed during operation to make sure that the bearings are not overheating.

The load on the machine should be frequently checked by means of an ammeter or wattmeter, and the temperature of the machine windings should be carefully watched to see that it doesn't rise above the maximum rated temperature for which the machine is designed.

The care of the commutator and D. C. brushes on synchronous converters is of the greatest importance, because these parts are usually required to carry very heavy currents during full-load operation of the machines.

If the commutator is allowed to become dirty or covered with copper-dust in the grooves between segments or if the brushes are poorly fitted or set off neutral, the sparking which results is likely to cause serious flash-overs and troubles.

All dirt and dust, and particularly copper-dust which wears off the commutator, should be kept well cleaned from all parts of the converter by wiping with a cloth and occasional blowing out with compressed air.

All protecting devices, such as overload, overspeed, temperature, and flash-over relays; circuit-breakers, etc., should be kept in good operating condition and frequently tested to make sure that they will protect the machine in case of faults or troubles.

A. C. MOTOR CONTROLLERS

Alternating current motors require starters and controllers in order to protect the motors themselves from excessive currents and mechanical stresses during starting; to limit current surges on the lines to which they are connected; and to obtain the proper performance of the motors in connection with the machines or equipment they are used to drive.

A. C. industrial controllers are, therefore, of great importance and every electrical man should have a good understanding of their operation and care. You will also find the mechanical principles and electric circuits of many of these devices very interesting.

In general, the functions of controllers are as follows:

(a) To conveniently start and stop motors, either by manual or automatic control
(b) To limit the current flow in the line during starting
(c) To provide overload protection for the motor
(d) To provide uniform acceleration of the motor and driven machinery
(e) To provide definite procedure and time delay during starting
(f) To protect the motor against failure of voltage
(g) To provide speed control and reversing of motors
(h) To provide safety to operators.

The simplest of controllers may provide only one or two of the above named functions, namely starting and stopping. Larger and more complete controllers which provide the additional protective features are often used even with small and medium sized A. C. motors, and nearly always with larger A. C. motors.

The speed regulating and reversing controllers are used only with motors which drive machines that require this performance.

283. CONVENIENCE AND SAFETY

All forms of motor controllers provide a much greater degree of convenience and safety for the operators than when the motors are started by ordinary knife switches.

Most manually-operated controllers have their contacts enclosed within a metal box or, in some cases, in an oil tank. These contacts are operated from the outside by a handle or lever and the operator is thus protected from the danger of arcs or flashes when the circuit is made or broken.

Magnetically-operated controllers can be operated from push bottons either on the controller or located at a distance. This also adds a great deal to the convenience and safety features of controllers —especially when they are used with large motors operating at high voltages.

The use of controllers having resistance units or auto transformers to reduce the voltage to the motors during starting greatly reduces the heavy surges of starting current which would otherwise be drawn by the motor. These surges are very objectionable because of the voltage drop and variations which they cause on the line. This voltage drop may interfere with the satisfactory operation of the other power equipment connected to the same lines and will usually cause very bad flickering or dimming of any incandescent lamps connected to the same lines with motors.

284. OVERLOAD, TIME DELAY AND NO-VOLTAGE DEVICES

Practically all controllers are equipped with some form of overload-protective device to open the circuit to the motor in case it is overloaded. These devices prevent the motor winding from being burned out or damaged by overheating in case an overload is left on the machine too long.

In this manner the overload devices on controllers, if they are kept in proper condition and adjustment, will often save very costly "shut-downs" and repairs.

Controllers which reduce the voltage to the motor during starting by means of auto transformers or resistance allow the torque to be applied gradually to the rotor and driven machinery, thereby relieving the motors and other machines of unnecessary mechanical stresses.

Certain types of machinery require very smooth and gradual starting, either because of the delicate nature of some of the machine parts or because of the material which the machines are handling. This is particularly true of textile machines, printing presses, paper-making machinery, etc. Special controllers using resistance which is very gradually cut out of the circuit are used to start motors which drive such equipment.

Automatic controllers are generally equipped with dash pots or some form of time-delay element which regulates the time allowed for the motor to come up to speed. Such controllers can be adjusted and set to provide definite starting procedure or the same rate of acceleration each time the motor is started.

Many controllers are also equipped with **no-voltage** release coils to protect the motor in case of failure of the line voltage. If the line voltage drops too low or fails entirely, these coils release a plunger or arm and trip the main contacts open, thus stopping the motor.

If it were not for the no-voltage protection the line voltage might fail and allow the motor to come to a complete stop, and then when the line trouble is corrected and the voltage reapplied, the motor controller would still be in running position and the motor would receive full line-voltage which would result in a very heavy starting current, possibly severe mechanical stresses on the motor or driven machinery.

No-voltage trip coils prevent this by returning the starter or controller to the off position at any time the voltage fails.

285. FULL VOLTAGE OR ACROSS-THE-LINE STARTING

Small A. C. motors under 5 h. p. in size are often started at full line-voltage by connecting them directly across the line, but larger motors generally require some form of starter which reduces the voltage to avoid excessive starting current surges in the line and relieves the motor and driven equipment of heavy mechanical stresses during starting.

However, when motors are connected to circuits which supply current to power equipment only and have no lighting equipment on them, quite large motors are often started directly across the line.

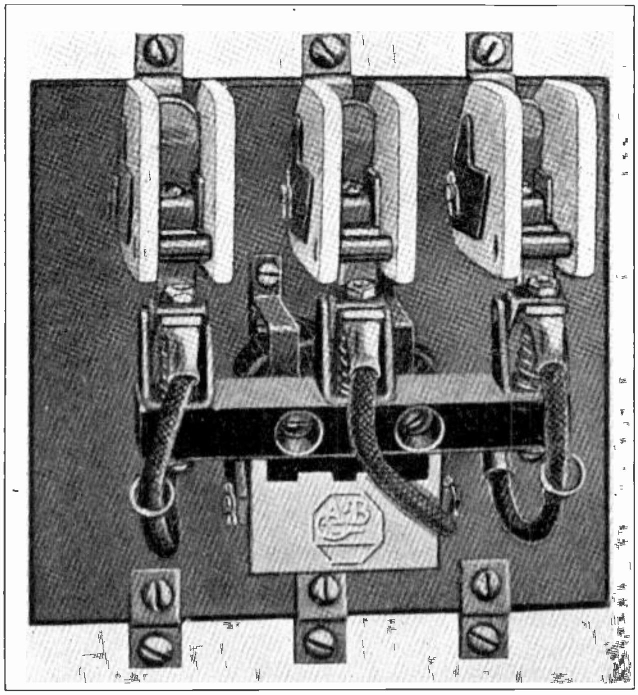

Fig. 265. Contactor mechanism of a magnetically operated across-the-line starter for A.C. motors. (Courtesy Allen Bradley Co.).

This is often done with squirrel-cage motors of several hundred horse-power where they are used to drive pumps and auxiliaries in power plants, etc.

When motors are started directly across the line their circuits can be closed by means of a knife switch, generally enclosed in a safety switch box; or by means of a magnetically operated set of contactors known as an **across-the-line** starter. Fig. 265 shows a set of magnetically-operated contactors, such as are used in across-the-line starters. The strips of fireproof insulating material on each side of the contacts are **flash barriers,** which are used to prevent flash-overs due to the arc formed when the contacts are opened.

286. THERMAL AND MAGNETIC OVERLOAD RELAYS

Across-the-line starters are usually equipped with fuses or some form of thermal or magnetic release to provide overload protection for the motor. The view on the left in Fig. 266 shows the mechanism of another across-the-line starter equipped with **thermal relays** or overload-trip devices, located beneath the contactors. On the right are shown two views of these thermal relays, the top one being closed and the bottom one open.

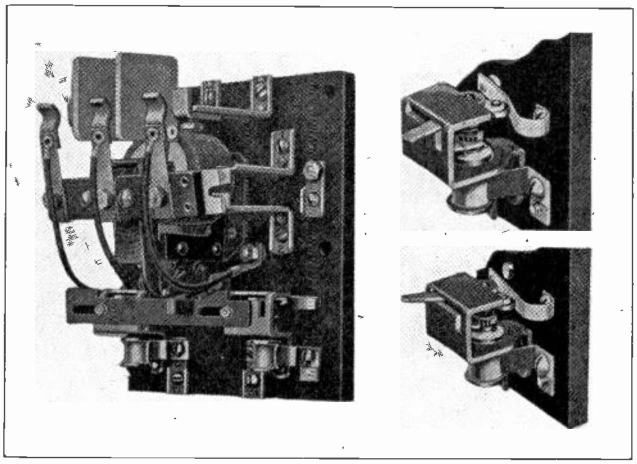

Fig. 266. This view shows on the left another type of an across-the-line starter, the mechanism being removed from the cabinet to show its construction. Also note the thermal overload-relays shown at the bottom of the panel on the left and in larger views on the right. (Courtesy Allen Bradley Co.).

All or part of the motor current is passed through a strip or element which overheats when the motor current becomes excessive, and this heat causes the spring or strip to expand and warp so that it releases or opens a set of contacts in the circuit of the magnet coil which holds the contactors in the motor circuit closed. When the circuit to this magnet is broken by the thermal relay contacts, the magnet releases the main contactors and opens the line circuit to the motor.

After the overload has been removed from the motor, the thermal relay can be reset by means of

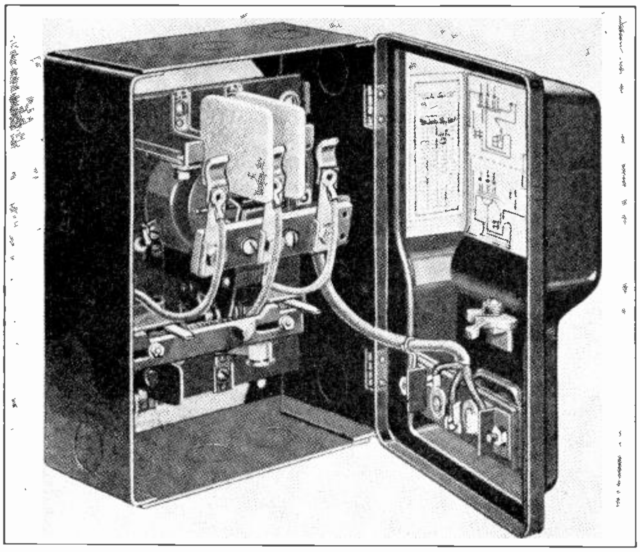

Fig. 267. This view shows a complete across-the-line starter for a three-phase, A.C. motor. The mechanism is enclosed in a safety cabinet with push button control attached to the cabinet cover. (Courtesy Allen Bradley Co.).

a small lever or handle shown in the views on the right in Fig. 266.

There are many different types of thermal relays used on motor starters, but they all work on the same general principle of expansion of a metal strip or element by the excessive heat when the motor current becomes too great.

Magnetic overload relays or trip devices are also used with motor starters. These devices were explained in the section on D. C. controllers, and you will recall that their coils are connected in series with one or more of the leads to the motor, so that when the motor current becomes excessive the magnets are strengthened and caused to raise a plunger which trips the line contactors.

The overload devices on any motor controller are very important, as they protect the motor winding from being burned out when the machine is overloaded. Every motor starter should have fuses or some form of thermal or magnetic overload protection.

Fig. 267 shows a complete across-the-line starter in its metal box, and equipped with thermal overload (O. L.) releases. For convenient control the operating magnet is wired to push buttons in the cover of the starter box.

Fig. 268 shows another across-the-line starter equipped with magnetic overload release coils.

287. ACROSS-THE-LINE STARTER CONNECTIONS

Fig. 269 shows a connection diagram of a simple across-the-line starter. The main line-circuit to the motor can be traced by the heavy lines, through the contactors, C, overload elements, R, to the motor terminals.

When the start button is pressed current flows from line 3 through this button, through the closed stop button, to the operating magnet; then back through the thermal trip contacts, T, to line 2.

The magnet draws up the armature and bar shown by the dotted lines, and this bar closes the contactors C, starting the motor.

At the same time the magnet closes contacts C it also closes an auxiliary contact A, which maintains a circuit from line 3 through the magnet after the start button is released.

To stop the motor the closed circuit stop button is pressed, de-energizing the magnet and allowing all the contacts to open.

If the motor becomes overloaded during operation, the excess current flowing through the thermal elements R, causes heat enough to expand strips T and open the circuit of the magnet at this point, thus releasing main contactors C and stopping the motor.

288. COUNTER-VOLTAGE OF A. C. MOTORS

In our study of D. C. motor starters and controllers we learned that resistance units were inserted in the armature circuit to cause a voltage drop and thereby reduce the applied voltage and amount of current during starting.

After the armature of a D. C. motor comes up to speed it generates counter-voltage which opposes the line voltage and thereby limits the current to the proper full-load value.

With A. C. induction motors of the common type the line voltage is applied to the stator winding. This winding doesn't generate counter-voltage by being revolved in the field flux as does a D. C. armature, but it does have generated within it counter-voltage of self-induction due to constant expanding and contracting of the alternating current flux.

Before an induction motor is started and while

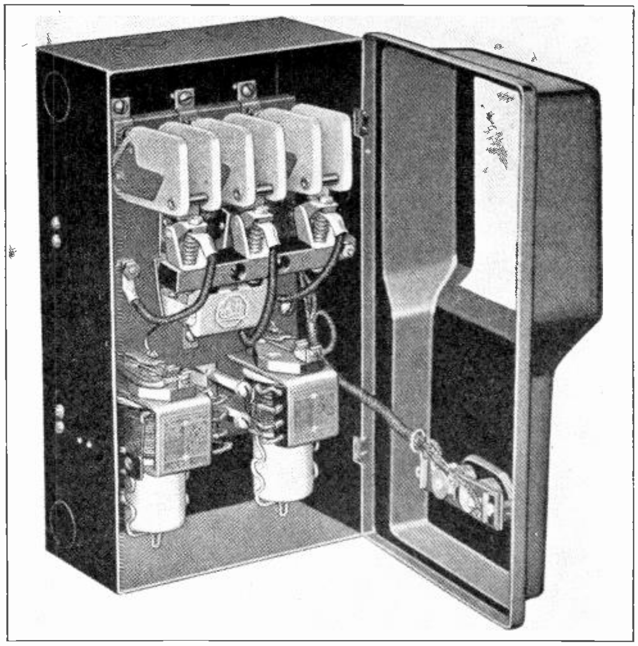

Fig. 268. In this view are shown the overload-relays located beneath the magnetic contactors of an across-the-line starter. (Courtesy Allen Bradley Co.).

its rotor is stationary, the counter-voltage generated in the stator is much lower than when the rotor comes up to speed and is revolving at nearly synchronous speed.

When the motor is running the flux set up by the induced secondary currents in the rotor is being whipped rapidly across the stator conductors and helps to generate higher counter-voltage in the stator winding.

This is the reason that the surge of starting current to the stator winding of an induction motor is several times greater than the full-load running current after the motor comes up to speed.

289. METHODS OF REDUCING VOLTAGE IN A. C. CONTROLLERS

Resistance can be used in series with the line wires to the motor to reduce this starting current on A. C. motors, just as it is used with D. C. machines.

Many simple A. C. motor starters use resistance units connected in series with one line wire, in the case of single-phase motors; or in series with two or all three of the line wires, on polyphase motors.

Most A. C. motor starters, however, use auto transformers instead of resistance to reduce the starting voltage. With resistance starters the voltage reduction is obtained entirely by voltage drop through the resistance, and they cause considerable power loss by the energy which is converted into heat in their resistance units.

Auto transformers are much more efficient and reduce the voltage by magnetic action through the step-down ratios of their windings.

Another decided advantage of the auto transformer is that by stepping down the voltage on the secondary winding the current is increased. It is therefore possible to obtain the required starting currents for the motors from the secondary winding of the auto transformers with less current flowing from the line to the primary. When resistance starters are used the full amount of starting current must be taken from the line.

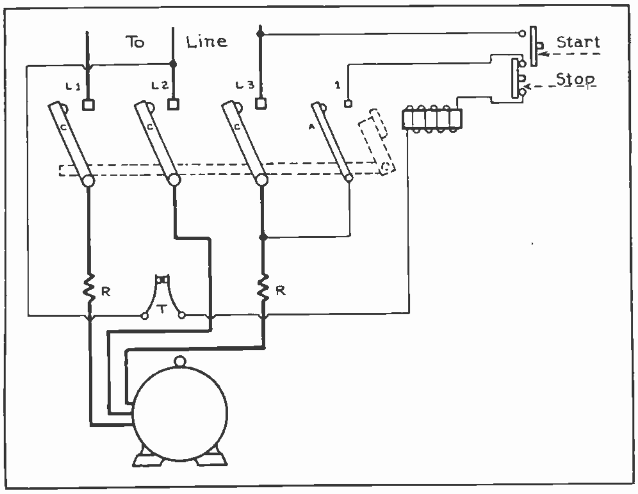

Fig. 269. Circuit diagram showing the connections for a simple across-the-line starter with the contactors operated by an electro-magnet which in turn is controlled by the stop and start buttons. Also Note the thermal overload contacts, T, which are operated by expansion from the heat of resistors, R.

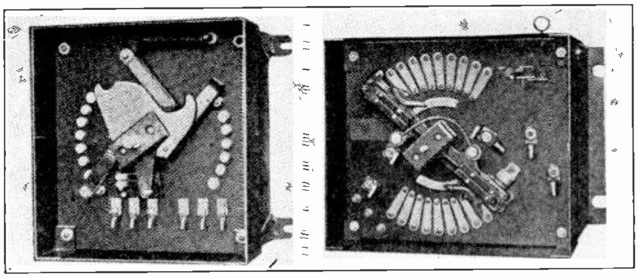

Fig. 270. This view shows two different face plate starters of the resistance type for use with either single-phase or three-phase A.C. motors. (Courtesy Cutler Hammer Mfg. Co.).

Auto transformers and their principles and connections were described in detail in Article 147 of A. C. Section Four. It would be well to review this article before going farther in the study of this type of A. C. motor starter.

Some types of starters for small A. C. motors use plain choke-coils to reduce the current during starting or to obtain speed control. Even these are more economical in A. C. circuits than resistance units are, because the voltage drop in a choke coil is caused by the induced counter-voltage which opposes the line voltage, instead of being caused by resistance which produces the I^2 R loss.

So keep in mind that in general it is much more economical to use choke coils or auto transformers rather than resistance units to reduce the voltage in A. C. circuits. Resistance controllers are often used, however, where very gradual starting or a wide range of speed regulation in smooth, gradual steps is required.

290. RESISTANCE TYPE STARTERS

Resistance can be used in the line leads to the stator of an A. C. motor, or, as previously explained, in the secondary leads from the rotor in the case of slip-ring motors.

As the **torque of an induction motor varies with the square of the voltage applied to its stator,** slip-ring motors with secondary resistance are generally used where frequent starting or speed regulation and good torque are required.

For the gradual starting of ordinary squirrel-cage motors, resistance-type starters are often used and connected in the primary or stator circuit.

Fig. 270 shows two types of resistance starters which use sliding contacts to cut out resistance as the motor comes up to speed. These controllers have two sets of contacts to cut resistance out of two line-leads to a three-phase motor.

The controller shown in Fig. 271 has three sets of contacts, one for each phase of a three-phase motor.

Non-inductive resistance coils or grids can be used with these controllers, and they can be used

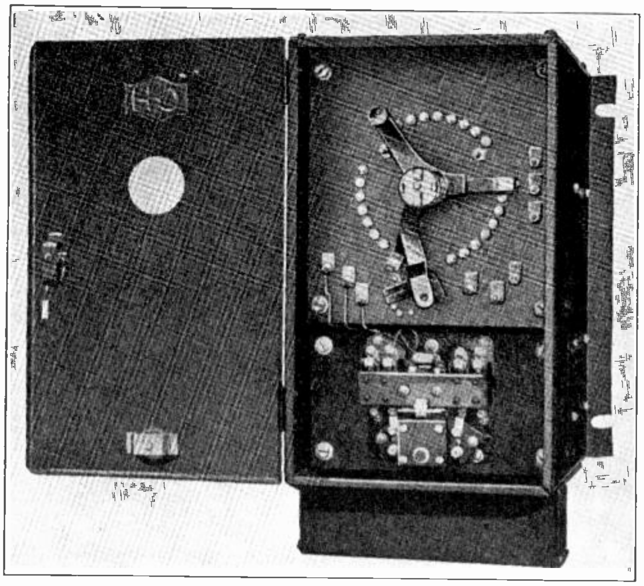

Fig. 271. Three-phase resistance starter of the face plate type. When the rheostat armature is rotated, resistance is cut out of all three phases at once. (Courtesy Cutler Hammer Mfg. Co.).

either in the primary stator circuits or secondary rotor circuits of motors, by proper arrangement of contacts and selecting the proper sized resistance units.

Fig. 271-A shows several styles of resistance units which are commonly used with resistance starters.

Controllers of this type with small contacts and resistance can be used for starting duty only; or, with heavier contacts and resistors, for both starting and speed-regulating duty.

Fig. 272 shows the connections of a simple resistance starter used in the primary circuit of a three-phase squirrel-cage motor. The movable arm carries two metal strips, A, which are placed one at each end and are insulated from the arm and from each other.

As the arm is moved the sliding metal strips make contact between the long metal segments, B, and the small contacts which cut out the resistance step by step as the arm is moved in a clockwise direction.

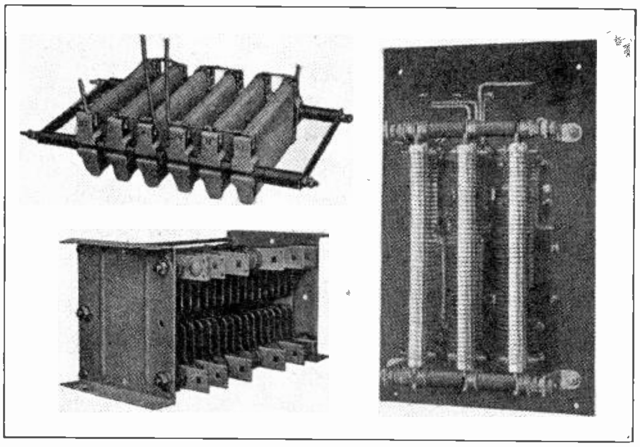

Fig. 271-A. This photo shows several types of resistance units used with A.C. motor starters. On the upper left are shown non-inductive, coil-wound resistors; on the lower left grid type resistors; and on the right edge-wound resistors made of strips of resistance metal wound edgewise around non-combustible cores.

Fig. 273 shows the connections of a resistance controller used in the secondary or rotor circuit of a slip-ring motor. The sliding arms in this case are all connected together so that they short out the resistance as they are rotated clockwise.

Either a plain starting-switch or a starter with resistance or auto transformer coils can be used at A, according to whether it is desired to start the motor at full-line voltage or with reduced voltage on the primary.

Fig. 274 shows a magnetic controller for remote push-button operation. This controller uses magnetically-operated contactors to cut out the resistance in two steps only.

291. CARBON PILE STARTERS

Carbon-pile starters, such as were described in the section on D. C. Controllers, can also be used for A. C. motors by equipping them with the proper number of carbon resistor units, one for each phase.

The view on the left in Fig. 275 shows a three-phase carbon-pile motor-starter of the manually-operated type and on the right in this same figure is shown a rear view of the starter mechanism. The columns or tubes containing the carbon disks can be clearly seen in this view.

When the handle on the outside of the box is moved in an upward direction it first closes the circuit from the line to the motor through the full resistance of the carbon piles with the disks in their loose condition.

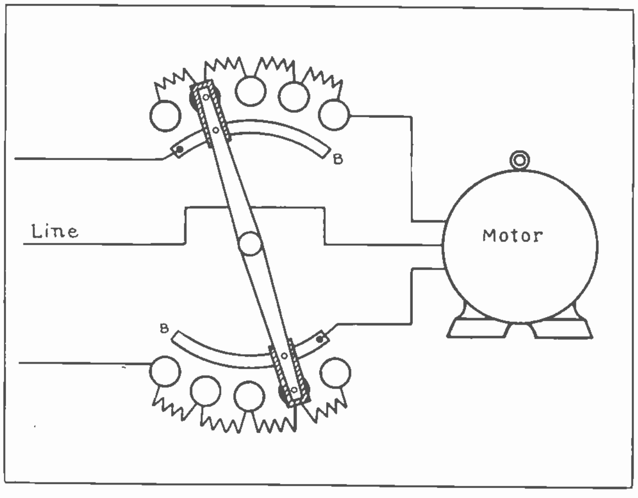

Fig. 272. Diagram showing the connections and circuit through a three-phase resistance type starter.

As the handle is gradually moved farther upward it applies more and more pressure to the disks in the tubes, thus gradually reducing the resistance in the motor circuit. The pressure is applied to these disks by means of the rod and top bar connected to the starter handle, and arranged to apply even pressure to the springs shown on top of each resistance element.

When the handle has reached the running position it closes a circuit to the magnet which operates the main contactors shown on the front of the panel in the left view in Fig. 275. These contactors then close and short-circuit the remaining resistance of the tubes completely out of the motor circuit.

The magnetic overload coils and dash pots can be clearly seen on the front of the panel in this figure, and you will also note the connections running to the push button in the front of the starter cover. This push button can be used to trip or release the starter and stop the motor.

292. CIRCUIT AND OPERATION

Fig. 276 shows a diagram of the connections for a manually-operated carbon-pile starter. Trace this circuit through carefully until you thoroughly understand its operation.

When the handle is pushed up it forces the set of three top contacts down on to the carbon disks, closing the line circuit through the carbon piles to the motor. When the motor is up to speed and the handle has been pushed clear up to running position, the auxiliary contact at "A" closes a circuit from line 1, through the trip contacts of the left overload coil, through the closed circuit stop switch to the coil C of the holding magnet; then back through the trip contacts of the right overload coil to line 3.

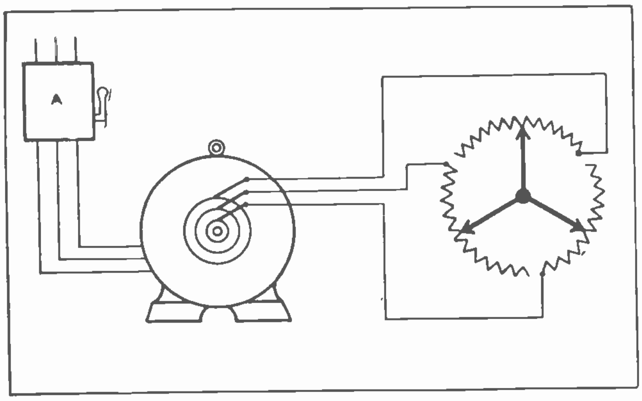

Fig. 273. Diagram showing the connections of a resistance starter in the secondary or rotor circuit of a slip-ring motor. The line switch at "A" is used to energize the stator circuit.

When this holding magnet becomes energized it closes the running contactors and completes a circuit directly from the line through these contactors, through the overload coils, and to the motor. This shunts out the carbon piles entirely, thus removing all of their resistance from the circuit during running.

As the main running contactors close they draw up an auxiliary contact, B, which closes the "stick" circuit through the holding coil; so it is not necessary for "A" to remain closed any longer.

In case of overload on the motor the increase of current strengthens the overload coils and causes them to lift their plungers, which strike the tripping contacts and open the circuit to the holding magnet.

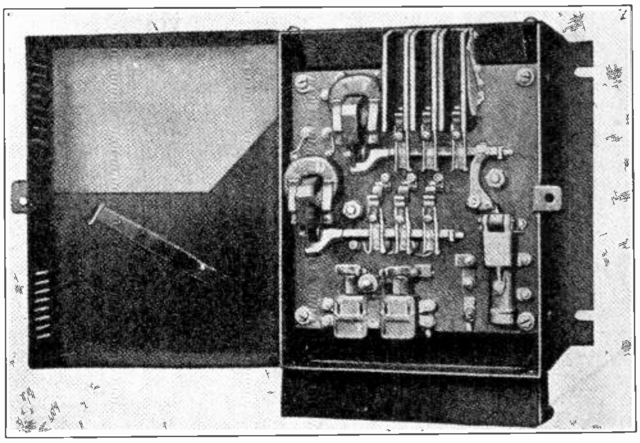

Fig. 274. Automatic controller which uses magnetically-operated contactors to cut the resistance out of the motor circuit in two steps. (Courtesy Cutler Hammer Mfg. Co.).

This causes the magnet to de-energize and release the running contactors, thus breaking the line circuit and stopping the motor.

The overload coils are equipped with dash pots to slow the action of their plungers, so that a momentary overload which lasts only for a very short period will not cause the plungers to rise high enough to trip the holding magnet and stop the motor. But if the overload remains on the motor long enough to cause the machine to begin to overheat, this period is also long enough to allow the plungers to lift to the top of their stroke and trip open the contacts to stop the motor.

When it is desired to stop the motor by hand it is only necessary to push the stop switch, as this switch is also connected in series with the holding magnet.

The holding magnet in this case also acts as the no-voltage and under-voltage relay. This magnet is across the line from wire L-1 to L-3; so that if the line voltage drops or fails the magnet is weakened and allows the running contactors to fall open, thus

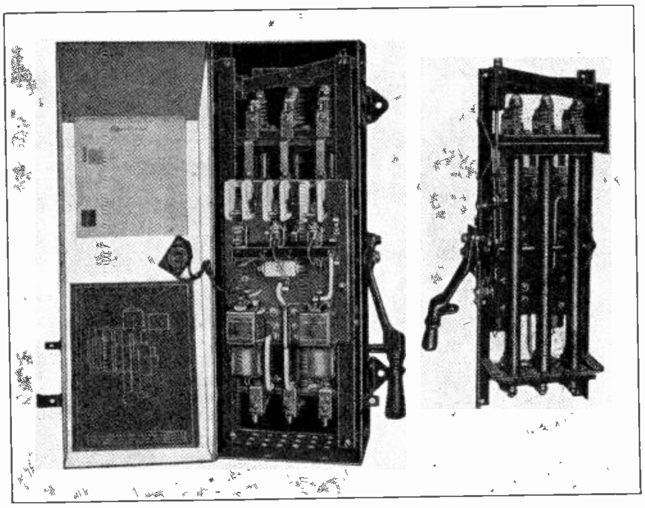

Fig. 275. On the left is shown a complete three-phase resistance starter of the carbon pile type for A.C. motors. On the right is shown the starter mechanism and tubes of carbon disks removed from the cabinet for a rear view. (Photo courtesy of Allen Bradley Co.).

requiring the motor to be properly started through the resistance again when the line voltage returns.

The blow-out coils which are marked in this diagram consist of a few turns of heavy wire wrapped around a strip of iron, the ends of which project on either side of the running contacts. The strip can be seen on the outside of the arc barriers in the left view in Fig. 275.

As these blow-out coils are connected in series with the line wires, they carry the full load current at all times and maintain strong alternating magnetic poles at the ends of the iron strips on which they are wound.

When the running contactors open, the flux from these blow-out coils and strips quickly extinguishes the arcs, thereby eliminating unnecessary burning or damage to the contacts.

Carbon-pile motor starters and controllers are also quite often used on motors up to 50 or 75 h. p. where very gradual application of starting torque is required. These controllers are not so often used on motors larger than those mentioned because of their I^2 R losses and the reduction in starting torque which occurs when the voltage to the stator or primary of an induction motor is reduced.

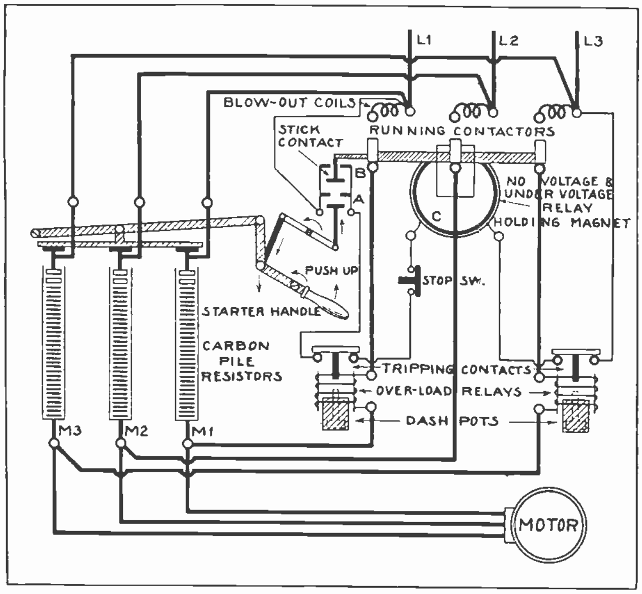

Fig. 276. Diagram showing the wiring and connections of a manually-operated, carbon pile resistance starter for three-phase A.C. motors. Trace this circuit carefully with the accompanying explanation.

293. AUTOMATIC CARBON PILE STARTERS

Carbon-pile motor starters and controllers are also made in automatic types, as shown in Fig. 277. The view on the left in this figure shows a complete automatic starter of the carbon-pile type for a three-phase A. C. motor.

The panel of this controller has two sets of contactors, two overload coils, and one timing relay coil which can be seen below. The timing relay is the one in the center.

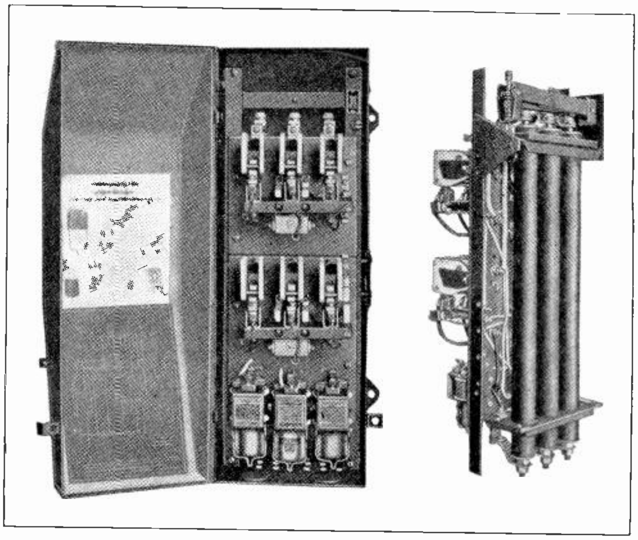

Fig. 277. Front and rear views of an automatic, three-phase, carbon pile starter. The magnetically operated contactors cut the resistance out of the motor circuit as it comes up to speed. (Courtesy Allen Bradley Co.).

On the right is shown a rear view of the controller mechanism and carbon-pile tubes.

Controllers of this type cut out all the resistance in one step when the motor is up to speed. You will note at the top of the right-hand view in Fig. 277 an adjusting screw by means of which the pressure on the three carbon piles can be properly adjusted or set for the motor with which the controller is being used.

These controllers are operated entirely by push buttons. When the starting button is pressed the top set of contactors closes and completes a circuit through the carbon resistance elements to the motor.

You will recall from the studies in an earlier section on the resistance of various materials, that the resistance of carbon decreases with increase of temperature. This causes the resistance in the motor circuit to be reduced a certain amount as the starting current warms up the resistor elements. Then, when the motor is nearly up to full speed, a slow-acting timing relay closes the operating magnet of the second set of contactors. When these running contactors close they short-circuit the carbon resistance units out of the motor circuit and apply full line-voltage.

294. CIRCUIT AND OPERATION

Fig. 278 shows the connection diagram for an automatic carbon-pile controller of this type. Trace this diagram carefully and step by step, until you are sure you understand the operation of these controllers. In this diagram are shown two push-button stations for controlling the motor from two different points.

Note that **the open-circuit start buttons are always connected in parallel and the closed-circuit stop buttons are always connected in series.** This rule holds true regardless of the number of push-button stations which may be used to control any single motor.

When either of the start buttons is pressed, a circuit is closed as shown by the small open arrows, from line 1 through the closed contacts of the left overload relays; then dividing through both the timing relay and the starting magnet, S.M., and joining again at X; through the start button (the top one in this case), through both stop buttons, through the contact of the right-hand overload relay; and back to line L-3.

This energizes both the starting magnet and the timing relay. The starting magnet immediately closes the starting contactors and completes a circuit which is easily traced by the heavy lines through these contactors, through the carbon-pole resistors, to the motor. All three lines can very easily be traced through this circuit at the same time.

When the starting magnet closes the starting contactors it also closes the auxiliary holding contact "A". This provides a holding circuit for the starting magnet, so that the starting button can now be released and opened. The circuit for the starting magnet and timing relay can then be traced from point X by the dotted arrows, up through contact "A", down through contact "B", which is still closed; then back up through the stop button, and on back to line 3 as before.

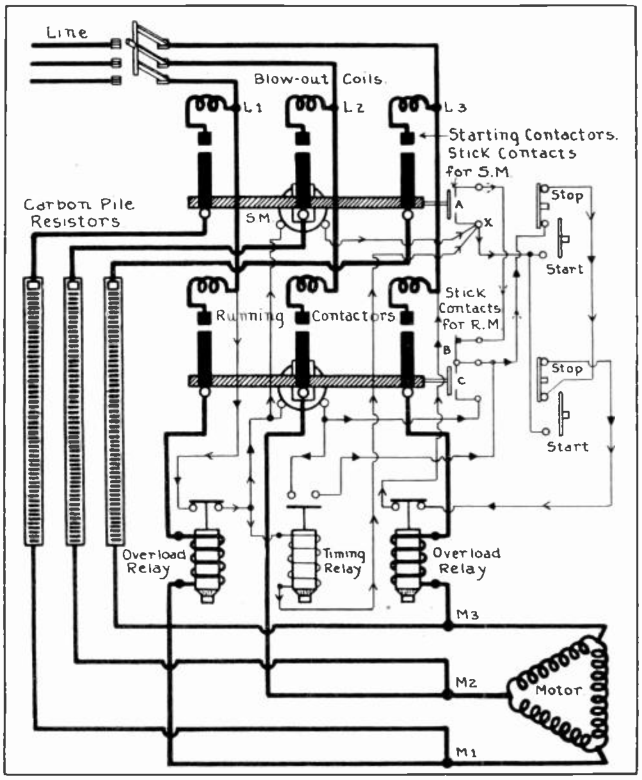

Fig. 278. Diagram showing wiring of an automatic, three-phase, carbon pile starter. Note the main power circuit traced in heavy lines from the line switch to the motor and also the auxiliary control circuits traced in light lines.

The timing relay is slowed in its action by a dash pot, and therefore requires a longer period to close its contacts. This period of time can be regulated by adjusting the dash pot of the timing relay according to the length of time which should be allowed for the motor to come up to speed.

When the timing relay reaches the top of its stroke and closes its contacts this completes a circuit as shown by the solid arrows, from line 1 through the contacts of the left overload relay, to the running magnet, R.M., down through the timing-relay contacts, on through the stop buttons and contacts of the right overload-relay, back to the line 3.

This energizes the running magnet R.M. and cause it to immediately close the running contactors. These contactors shunt out the carbon-pile resistors and close a circuit, as shown by the heavy lines, directly from the three-phase line through the running contactors, through the overload relay coils, to the motor.

As the running contactors close they also close the auxiliary contact at C and open the one at B. When B is opened it breaks the circuit of the starting magnet and allows these contactors to fall open. When C is closed this completes the holding or "stick" circuit for the running magnet, so that this current no longer needs to pass through the contacts of the timing relay.

You will find, however, that the circuit for the running magnet still continues through both of the stop buttons in series and also through both of the overload-relay contacts, so the motor can be stopped either by pressing one of the stop buttons or by an overload which causes the overload-relay plunger to rise and open its contact. Blow-out coils are shown above both sets of contacts in this diagram.

295. CONSTRUCTION OF CONTACTORS AND O. L. RELAYS

Fig. 279 shows an enlarged view of a set of contactors for a heavy-duty automatic controller of this type. In this view you will note the operating magnet and armature which closes the contactors. The arc barrier on the right-hand contactor has been raised so the contact shoes are in plain view. You can also see the three large turns of the blow-out coils which are wound around an iron bar directly beneath each pair of contacts. The black iron strips which are attached to the ends of this bar or core and project up along the sides of the arc barrier, form the poles to direct the flux of the blow-out coils across the arc when the contacts are opened.

Fig. 280 shows a sectional view of an overload-trip coil and its dash pot and contacts. When the plunger is lifted by an overload of current through the coil, it strikes the small pin above it and this pin pushes open the copper strip or spring-like contact at the top of the relay. The dash pot or oil cup can

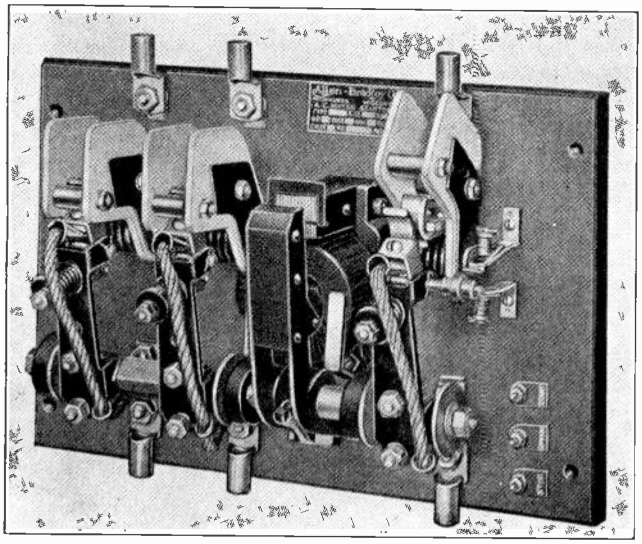

Fig. 279. This photo shows a good view of the magnetically operated contactors used with an automatic, carbon pile resistance starter. Note the arc barriers and blow-out coils on each contactor. (Photo courtesy Allen Bradley Co.) .

be removed by pushing to one side the wire clip which is plainly shown in this view.

Fig. 281 shows several other types of A. C. relays which are used with motor controllers.

296. COMPENSATORS, or AUTO TRANSFORMER STARTERS

Auto transformers are by far the most common device used in reducing the voltage to A. C. motors during starting. As previously mentioned, these devices are much more economical and efficient than are resistance starters.

Auto transformers reduce the voltage by transformer action and do not have the amount of resistance and heat losses that resistance starters do.

An auto transformer which reduces the voltage to one-half of line voltage will deliver to the motor from its secondary twice as much current as is drawn from the line.

Auto transformers used for A. C. motor starters almost always have on their coils a number of taps for varying the secondary or starting voltage. The number of these taps may vary from 1 to 5, or more, depending upon the number of starting voltages or steps in which it is desired to start the motor.

The lowest tap which is usually provided is for about 40% of line voltage and they range on up to 80% or 90% of full line-voltage.

Auto transformer starters which have only one tap in use and start the motor with only one step of reduced voltage are commonly called **compensators.**

These compensators are made in both manual and automatic types, and are very extensively used on motors from 5-h.p. to 100-h.p., and sometimes larger.

Fig. 282 shows a compensator of the manually-operated type, with the front cover removed to show the transformer coils, no-voltage release, and magnetic and overload relay.

Fig. 283 shows another compensator with the oil tank removed to show the stationary and moving contacts which are operated by the handle or lever on the side of the box. During operation these contacts are immersed in oil, so that the arcs which are drawn when the circuit to the motor is broken will be quickly extinguished by the oil, and unnecessary damage to the contacts will thereby be prevented.

297. PROCEDURE FOR STARTING A MOTOR WITH A COMPENSATOR

To start a motor with a compensator of this type, the starting handle or lever is first pushed in one direction as far as it will go, and is held in this position by the operator until the motor comes up to speed.

When the motor reaches full speed the handle is quickly pulled in the opposite direction as far as it will go, and locks in this position.

In the first position the handle closes the starting contacts to the reduced voltage taps of the auto transformer, applying low voltage to the motor during starting.

When the lever is swung to the second position, the starting circuit is broken and the contacts to the full line-voltage are immediately closed, thereby completing the running circuit.

These compensators are generally provided with a latch, so that the starting handle cannot be moved into the running position first but must first be moved into the starting position and then drawn quickly over to the running position, after the motor is up to speed.

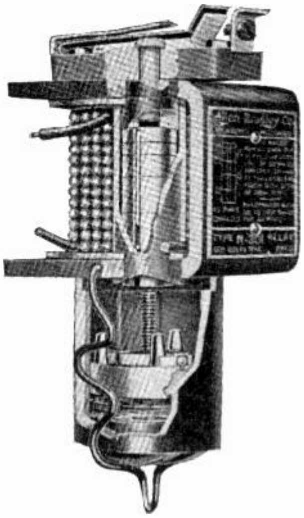

Fig. 280. Sectional view of a magnetic overload-relay and dash pot. When the core is lifted the rod above it forces open the spring contacts which break the circuit to the holding magnet. (Courtesy Allen Bradley Co.)

This last operation should be performed quickly because during the time the lever is being moved from starting to running position the motor circuit is momentarily broken, so if the lever is brought back slowly the motor will lose considerable speed before the running contacts are closed.

In some cases slow operation will also allow the latch to fall in place again, thereby requiring the starting operation to be repeated.

During starting the lever should be firmly held in the starting position to keep the contacts tightly together; otherwise they may arc and seriously burn or pit the contact shoes.

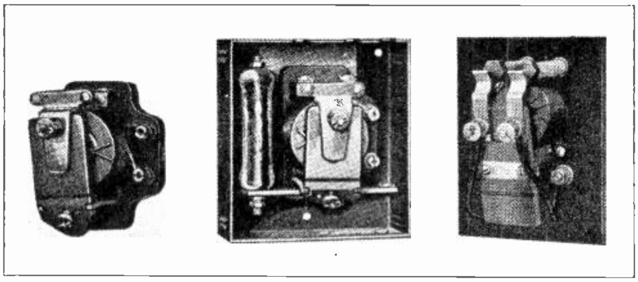

Fig. 281. Three different types of A.C. relays used with motor controllers. (Courtesy Cutler Hammer Mfg. Co.).

The lever and contacts of these compensators are held in the running position by a mechanical latch which is often provided with a hand trip on the outside of the controller. In other cases the controller may have a push button for breaking the circuit of the no-voltage release coil in order to stop the motor.

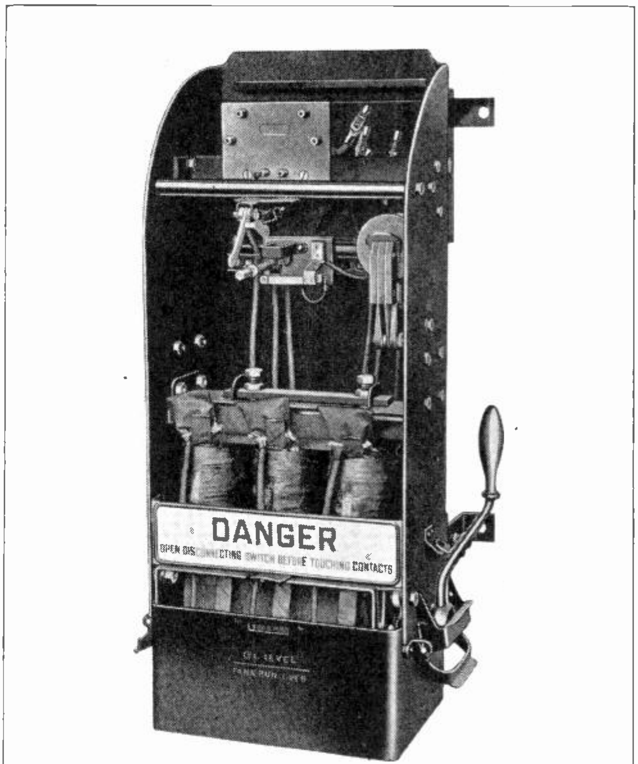

Fig. 282. This photo shows a front view of a three-phase, auto transformer starter or compensator used for starting squirrel-cage motors at reduced stator voltage. (Photo courtesy General Electric Co.)

298. PROTECTIVE FEATURES

The no-voltage release coil and the overload-trip coil in compensators of this type are usually so arranged that when they raise or drop their plungers the plungers strike the trigger or release on the latch, allowing the lever and contacts to be returned to normal or open-circuit position by means of a spring.

The contacts in starters of this type are generally mounted in rows and fastened on bars of wood or a fibre-like composition of good insulating quality. The operating handle is also attached to the movable contacts by an insulating bar, and this eliminates the chances of shock hazard to the operator when starting high-voltage motors.

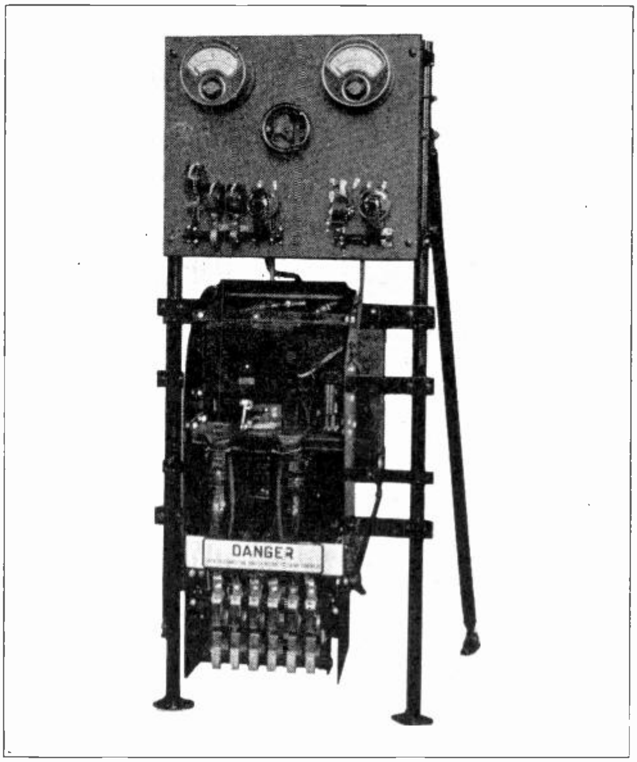

Fig. 283. This photo shows another view of a compensator with both the front cover and the oil tank removed. The contacts which operate under oil can be seen at the bottom of the controller. (Courtesy General Electric Co.).

Making and breaking circuits under oil and inside the metal case eliminates the danger of burns and flashed eyes which might occur to operators if large motors were started and stopped by means of ordinary knife-switches.

299. CIRCUIT AND OPERATION

Fig. 283-A shows a connection diagram for a simple Western Electric compensator or auto transformer starter for a three-phase motor. When the compensator handle is thrown to the starting position all of the moving contacts on the center bar are carried into action with the lower set of stationary contacts.

This completes a circuit as shown by the open arrows, from the three line wires to the primary terminals, P, of the auto transformer; and also from the secondary terminals, S, of the auto transformer to the motor terminals, M-1, M-2, and M-3, and to the motor winding. The motor is thus supplied with reduced voltage from the auto transformer secondary.

In tracing this circuit you will note that the starting current doesn't pass through the overload relay coils, because this starting current is much heavier than normal full-load running current and would be likely to cause the overload relays to trip out before the motor could reach full speed.

When fuses are used in connection with compensators of this type they are also placed so that they are only in the running circuit and not in the starting circuit.

When the handle is thrown to the reverse position the moving contacts on the center bar are brought into action with the upper set of stationary contacts. This completes a circuit from each line wire to the motor, supplying full line-voltage for running.

The running circuit from line 1 can be traced by the solid arrows from line wire 1 to terminal L-1, then up through the left overload coil, and down to terminal, T-1, through the controller contacts, and up to M-1, and to the top lead of the motor.

The circuit from line 2 can also be traced by the solid arrows to terminal L-2, through both bars of the center controller contacts, and back up to terminal M-2, then to the center wire of the motor.

The circuit from line 3 can be traced to terminal L-3, then up through the right-hand overload coil, down to T-3, through the controller contacts, and back up to M-3; then to the lower wire of the motor.

While in this diagram all of the arrows have been shown leading toward the motor, we know, of course, that with A. C. applied, the current in these motors would be rapidly reversing in direction, first flowing in on one wire and out on the other two; then in on a different wire and out on the remaining two; etc.

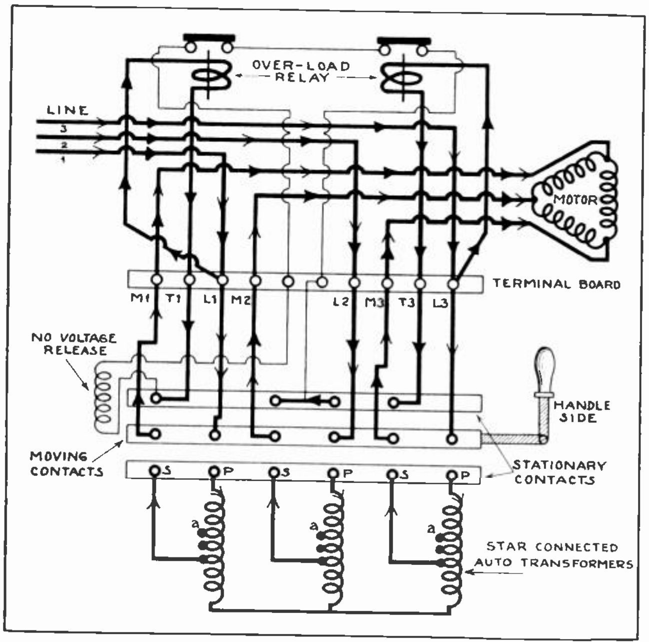

Fig. 283-A. Wiring diagram of a manually-operated compensator used for starting three-phase, squirrel-cage motors. Carefully trace the starting and running circuits with the accompanying explanation and also note the overload protective circuit.

We have found in tracing this running circuit that the currents of two of the phases pass through the overload relay coils, so we know that if the motor becomes overloaded the strength of these coils will increase and raise their plungers, tripping open the contacts which are in series with the no-voltage release coil.

This de-energizes the no-voltage release, allowing its plunger to fall and trip the latch which releases the controller handle and contacts to the off position.

The no-voltage release coil will also trip the compensator if the line voltage becomes too low or fails entirely.

The circuit for this coil can be traced from line 1 to M-2, up through the left overload coil, down to L-1, through the N.V. release coil, and up through both of the overload relay contacts in series, down through the controller contacts, and back up to line 2.

300. STARTING VOLTAGE ADJUSTMENT

On compensators that are equipped with several taps on the coils of the auto transformer, if the motor doesn't start as rapidly as it should (ordinarily 10 to 30 seconds) with the secondary leads on the low voltage tap, these leads can then be shifted to a tap of higher voltage.

Compensators should not be operated with the secondary leads on different voltage taps, such as for instance one lead on a 40% tap, another on a 60% tap, etc. The leads should all be carefully connected to taps of equal voltage.

Fig. 284 shows the diagram of another starting compensator such as is made by the Westinghouse Electric & Manufacturing Company. The auto transformer coils of this starter are connected open-delta, instead of star as they are in Fig. 283-A.

Trace this circuit in the same manner as the one in Fig. 283-A was traced, making sure that you can follow the circuit of the three line wires to the auto transformer connections when the compensator is in the starting position; also from the auto transformer secondary to two of the motor leads, and from one line wire direct to the center motor lead during starting.

Then trace the circuit from the line through the overload trip coils to the motor when the compensator is in running position.

301. AUTOMATIC REMOTE CONTROLLED STARTERS

Compensators of the types just described can be arranged for remote operation by using such mechanical connections as rods, light-weight piping,

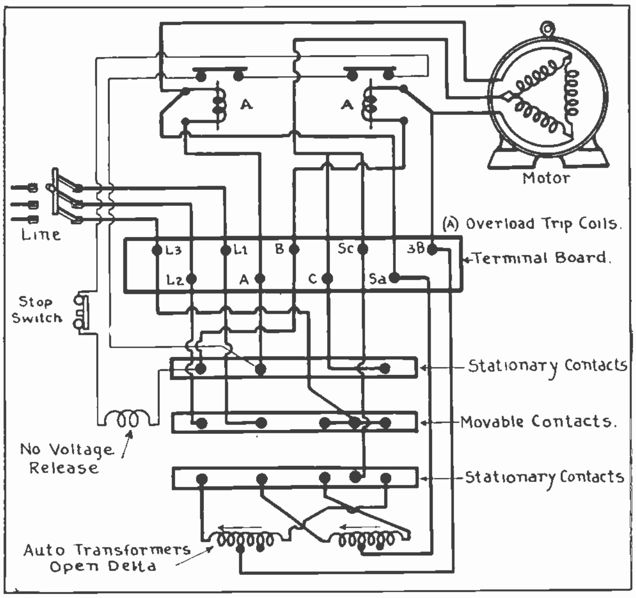

Fig. 284. Wiring diagram of a three-phase Westinghouse compensator using open-delta-connected auto transformers, and a stop switch in series with the no voltage release.

or steel cables; or they can be arranged for electrical remote operation by using electro-magnets to move a laminated armature which takes the place of the ordinary hand-operated starting lever.

In other cases the leads from the line, motor, and auto transformer are connected to two sets of special magnetically-operated contactors mounted on a panel similar to those described for resistance starters.

These contactors are then operated by their magnets, which are in turn controlled by push buttons used to start and stop the motor.

Fig. 285 shows a connection diagram for a General Electric automatic starter of this type.

The starting and running circuits from the line to the motor can easily be traced through the controller by the heavy lines, and the auxiliary controller circuits are shown by the lighter lines.

This controller has a motor-operated timing element which regulates the period of time that the motor will be kept on reduced voltage during starting. This timing element is operated by the small relay motor shown in the lower left section of the main diagram.

The four small sketches beneath the main circuit diagram show the several positions of the contacts in the timing element. Examine these carefully and compare them with the timing element contacts in the main diagram while tracing out the circuit for normal, starting, and running positions.

302. CIRCUIT AND OPERATION

When either of the start buttons is pressed, a circuit can be traced as shown by the dotted arrows, from line 1, through the element of the thermal overload relay, through the start button to the terminal X.

With the timing element contacts in the normal position as shown in the main diagram, the current divides at this point, part of it flowing to the left and through the relay magnet, back to the right to terminal X-1, through the thermal overload contacts to line 3; which completes this circuit.

When the relay magnet is energized it attracts the armature "A", causing it to make contact with the holding circuit through the closed-circuit stop buttons. This position of the relay contact is shown in the lower diagram No. 2.

Going back to point X, the other part of the current which divided at this point flows up through the relay contacts and divides again; part going through the relay motor starting it in operation, and the other part going up to the starting magnet and then back to the point X-1, and to line 3.

When this starting magnet is energized it closes the starting contactors. A circuit can then be traced as shown by the small open arrows, from line wires 1 and 3, down through the heater elements of the thermal overload relay, back up through the blow-out coils and contactors, and to the primary terminals of the auto transformer.

The circuit from line 2 is traced directly through the blow-out coil and contactor to the center primary lead of the auto transformer.

The reduced-voltage circuit to the motor can be traced by the large open arrows from the taps on the auto transformer coils, up through the other starting contactors to the motor. The left-hand

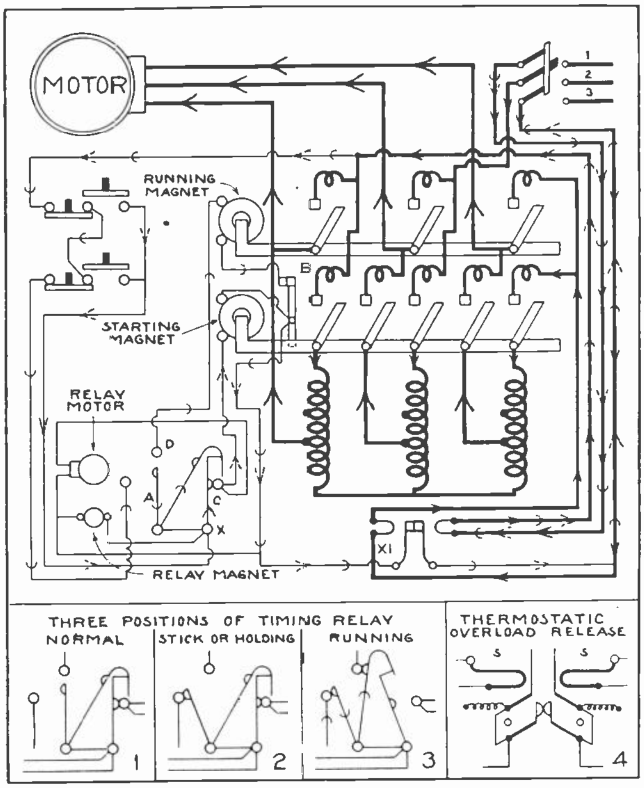

Fig. 285. This diagram shows the complete circuits of an automatic controller with magnetically-operated contactors in the starting and running circuit, and a motor-operated timing relay to regulate duration of the starting period. Trace all parts of this circuit carefully with the accompanying explanation.

wire from the transformer tap runs directly to the motor without passing through any contactor.

The auxiliary contacts at B near the starting magnet are normally closed when the controller is in the off position and are opened at the same time the starting magnet closes the starting contactors. This acts as an electrical interlock and prevents the running magnet from being energized until the starting magnet releases and opens the starting contactors and again closes contacts B.

A mechanical interlock in the form of a bar is also very often provided between the operating mechanisms of the starting and running contacts, so that the running contacts can never close until the starting contacts are open. This precaution must be taken in order to prevent short-circuiting the auto transformer windings.

After the relay motor is started it runs at a definite speed and operates a chain of small gears which very slowly turn the timing disk. When this disk makes a certain part of one revolution it brings around a trip pin that snaps the hook-shaped contact assembly of the timing mechanism over into the position shown in the small diagram 3 at the bottom of Fig. 285. This opens the circuit at "C", de-energizing the relay motor and the starting magnet; allowing the starting contactors to fall open and at the same time closing auxiliary contact B to complete the circuit to the running magnet.

The contacts which are moved over by the relay motor also close a circuit at D which energizes the running magnet.

This circuit can be traced by the round arrows from line 1, through the heater element of the thermal relay, through the closed circuit, stop buttons, armature, A, and contact, D, of the timing device, through the coil of the running magnet, auxiliary contacts, B, thermal relay contacts and back to line 3.

When the running magnet is thus energized it closes the upper set of running contactors and completes a circuit directly from the line to the motor. You will note, however, that the circuit from line wires 1 and 3 passes through the heater elements of the thermal overload-relay, so that any excessive overload on the motor will cause the contacts of this relay to open and break the circuit of the running magnet holding-coil. This will open the running contactors and stop the motor.

The two closed-circuit stop buttons are also in series with this magnet, so pressing either of these will stop the motor.

303. TIME ELEMENT DEVICE AND O. L. RELAY

A motor-operated timing device such as used with this controller can be set to give the desired period of time during which the motor is operated at reduced voltage while it comes up to speed, and according to the amount of load connected to it.

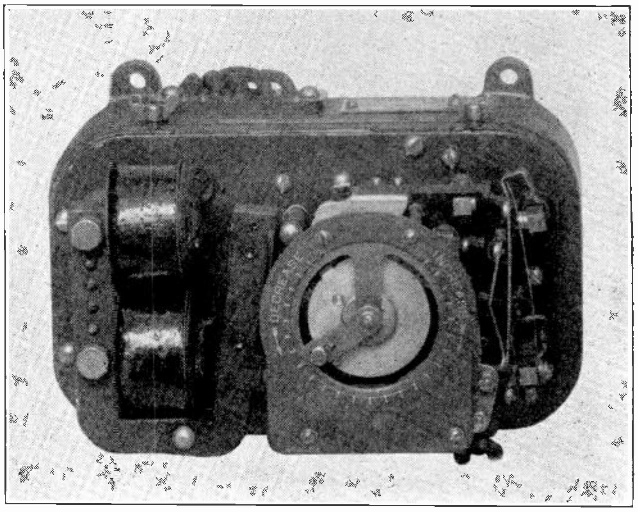

Fig. 286. This photo shows a front view of the motor-operated timing relay for which the connections were shown in Fig. 285. Note the relay magnet and time-setting dial on this unit. (Photo courtesy General Electric Co.).

Fig. 286 shows a photograph of a motor-operated timing relay of this type. The cover is removed, showing the relay magnet on the left and the adjusting dial on the right. By moving the small arm on this dial in one direction or the other the length of the starting period can either be increased or decreased as desired. The operating motor is enclosed within the case of the relay.

The advantage of timing relays of this type is that they are very accurate and will always start the motor in exactly the amount of time for which they are set.

On certain other types of controllers small motors are sometimes used to drive a set of drum contacts similar to those on a sign flasher. As the drum slowly revolves, the contacts close circuits in the proper order to the operating magnets, which close the main contactors, cutting out resistance and increasing the motor voltage step by step as the machine comes up to speed.

The small diagram number 4 at the lower right in Fig. 285 shows the thermal overload relay in more detail. When excessive current flows through the curved heater elements the heat produced in them warms up the expansion strips, S, directly above them, causing these strips to warp upward until their ends slip off the tops of the vertical springs and allow the relay contacts to fly apart.

Fig. 287 shows an excellent photograph of one of these thermal overload-relays. The expansion strips are partly covered by the two small metal hoods at the upper left and right. The relay contacts are clearly shown in the center of this photo, and you can also see the adjusting pointers projecting out in either direction from the insulating members which carry the relay springs.

This particular relay is equipped for resetting by pulling on the cord to draw the contacts back together. Other relays of this type can be reset by means of a push button which raises the V-shaped wedge, forcing the bottom ends of the contacts apart and closing them at the top.

It is very important that the thermal overload relays as well as the motor-operated timing device be properly adjusted according to the current rating of the motor and the nature of the load attached to it, in order to properly protect the motor from overheating during running or starting.

Automatic controllers with properly adjusted time element devices have the decided advantage of accurately regulating the period of time allowed for starting the motor each time the operation is performed.

The life of motors is generally much longer when they are started in this manner than when they are carelessly started with manual controllers.

Unless the operators of manual controllers are very careful there is likely to be a considerable variation in the periods of time allowed between the steps of starting, and this may result in very heavy surges of starting current and heavy mechanical stresses on the motor and driven machines.

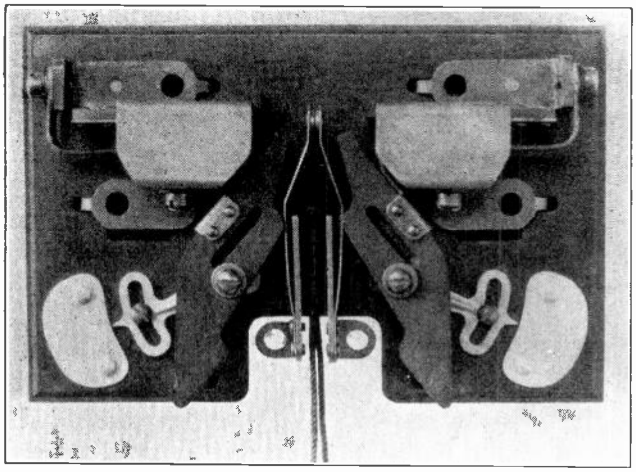

Fig. 287. Excellent view of thermal overload-relay such as used on automatic controllers manufactured by the General Electric Co. Note the current setting pointers and also the resetting cord on this device. (Courtesy General Electric Co.).

304. AUTO STARTERS AND PRINTING PRESS CONTROLLERS

Automatic starters which apply the voltage more gradually in several steps during starting are commonly called **auto starters.** Starters of this type have auto transformers with several taps, each of which is connected to a separate set of contactors.

These contactors operate in the proper order to apply the voltage to the motor in gradually increasing amounts during starting. For example, the auto transformer may have taps providing starting voltages of 50%, 65%, and 80%, and if these voltages are applied in order as the motor comes up to speed it will result in a fairly uniform rate of acceleration and will greatly reduce the starting current surges in the line and motor winding.

Fig. 288 shows an automatic controller for use with printing press motors. This controller has a variable resistance which can be set by hand for any speed at which it is desired to operate the motor. The contacts and arm of this rheostat can be seen at the lower left corner of the controller panel. The rheostat can be set for the desired speed before the motor is started, or it can be adjusted during operation.

On the face of the panel are shown the contactors which cut out the various steps of resistance, bringing the motor up to speed. Controllers of this type are operated by push button stations located at a number of different points on the printing press.

Fig. 289 shows the panels for two other types of printing press controllers. These controllers have the rheostat operated by a small motor which is remotely controlled by means of push buttons and relays.

Automatic controllers using large contactors on panels are commonly used to control very large A. C. motors, even up to several thousand h.p. For such large motors as these the contactors used must be quite large air circuit breakers in order to handle the heavy currents.

Fig. 156 in Section Five on A. C. Motors shows a large panel-type controller in use with a 3000-h.p. A. C. motor of the slip-ring type. The controllers on this panel cut in and out large banks of resistance grids, which are shown behind the controller at the left.

Automatic motor controllers can be arranged for operation by floats in tanks, by pressure or temperature relays and in many other ways, so that they start, stop, and vary the speed of pump motors and other equipment entirely automatically whenever the water level, pressure, or temperature requires it.

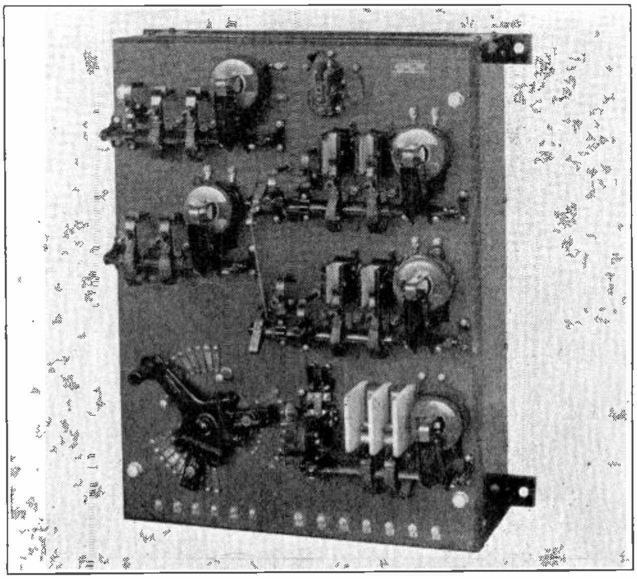

Fig. 288. This photo shows a front view of an automatic, panel type controller with a hand-operated, speed-regulating rheostat. (Photo courtesy General Electric Co.).

305. DEION ARC QUENCHERS

Controller contacts are always subject to more or less damage by the arcs formed when the circuits are broken. On controllers which have the contacts immersed in oil the arc is extinguished or quenched much more quickly by the oil, thus considerably prolonging the life of the contacts.

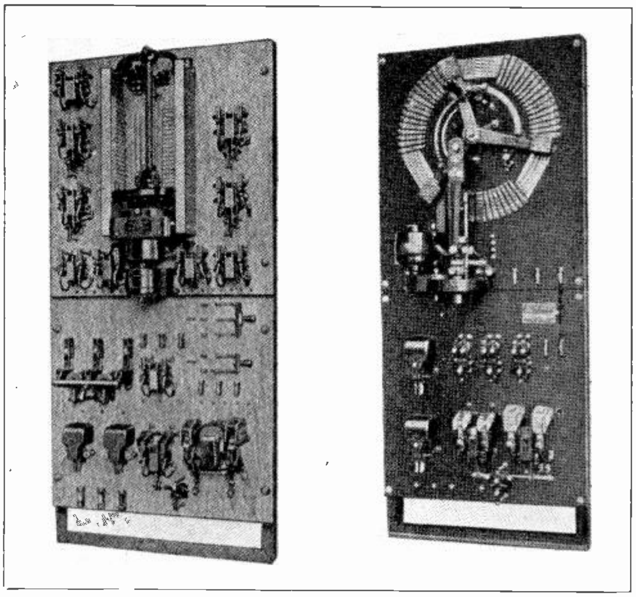

Fig. 289. Two different types of motor-operated, automatic printing press controllers. Small electric motors are used to operate the rheostat for controlling the speed of the main motors. (Courtesy Cutler-Hammer Mfg. Co.).

Controllers of the panel type with contacts which break the circuit in air, generally have the arcing greatly reduced by means of blow-out coils, as previously explained.

Another form of device which has been recently developed for quickly extinguishing the arcs at contacts of air breakers is known as the **Deion** arc-quenching device. This device consists of a hood made of fireproof insulating material and containing a set of metal grids or slotted blades into which the arc is blown when it is formed.

On the left in Fig. 290 are shown two views of one of these Deion hoods, and on the right in this same figure is a sectional view showing the manner in which the hood is placed over the contacts of the breaker. The effect of these grids is to quickly separate the arc into a number of small arcs in series and thereby break it up.

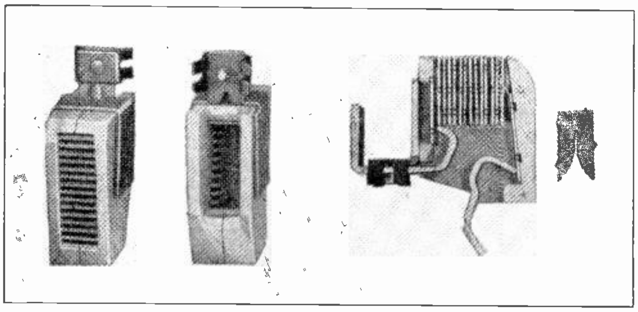

Fig. 290. This photo shows several views of Deion arc quenchers. The sectional view on the right shows the manner in which these devices are placed over the contacts, to quickly extinguish the arc when it passes up into the metal blades. (Courtesy Westinghouse Elec. & Mfg. Co.).

These devices are used not only on small contactors on motor controls, but also on large circuit-breakers on high-voltage power lines. They are very effective in extinguishing arcs and actually break up the arc and interrupt the current flow within one-half cycle from the time the contacts are opened.

Fig. 291 shows a double set of contactors equipped with Deion hoods, which can easily be removed or lifted from the contactors to allow repairs to the faces or horns of the contacts themselves.

306. DRUM CONTROLLERS

Drum controllers are very extensively used for starting and speed control of A. C. motors of the slip-ring type. You are already familiar with the general construction and operation of drum controllers from the material covered in the Section on D. C. Motor Controls.

When used with A. C. motors, the drum controller contacts can be used to cut out step by step the resistance of the secondary or rotor circuit, or to shift the connections from one tap to the next of the auto transformer in the stator circuit.

On small motors up to 10-h.p. face-plate type resistance-starters, such as described earlier in this section, are commonly used, but with motors larger than this drum controllers are generally preferred because their contacts are much heavier and more capable of handling the heavy currents required.

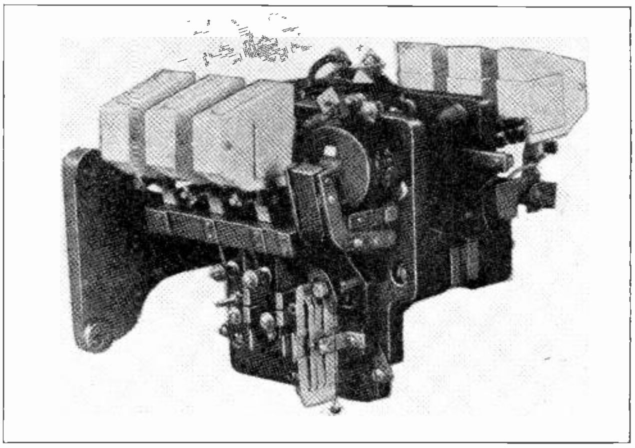

Fig. 291. Two sets of contactors on a controller equipped with Deion arc extinguishers. (Courtesy Westinghouse Elec. & Mfg. Co.).

Fig. 292 shows an A. C. drum switch or controller with the cover removed. In this view the revolving segments, stationary contact fingers, arcing barriers, and blow-out coils can all be clearly seen.

The sliding motion with which the revolving segments are brought into contact with the stationary fingers tends to keep the contact surfaces worn bright and smooth, thereby providing good low-resistance connections as long as the contacts are kept in proper condition and are not allowed to become too badly burned or pitted by the arcs.

Fig. 293 shows three different sizes and types of A. C. drum controllers. By observation of the controllers shown in this figure you will see that it is possible to make drum controllers with almost any desired number or arrangement of contacts. For this reason drum controllers can be used with A. C. motors to perform a wide variety of switching operations for gradual starting or wide ranges of speed variation.

Where very large A. C. motors, ranging from several hundred to several thousand horse power, are to be controlled by drum controllers, the drum will be used merely as a remote control for large magnetically-operated contactors located on a panel.

When used in this manner, the drum and contacts handle only small amounts of current at low voltage and these currents in turn operate the magnets which close the heavy current circuits at high voltage. This provides a much greater degree of safety for the operators.

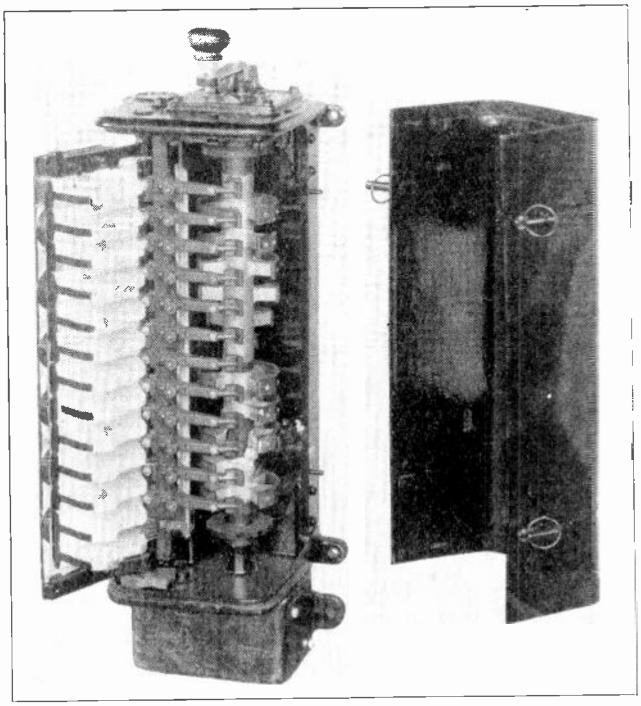

Fig. 292. This view shows an A.C. drum controller with the cover removed. Note the rotating segments, stationary contact fingers, arc barriers, and blow-out coils. (Courtesy General Electric Co.).

307. STARTING, REVERSING AND SPEED CONTROL

In addition to starting and varying the speed of A. C. motors, drum controllers are commonly used for reversing the machines as well. You will recall from previous articles that a three-phase A. C. motor can be reversed by reversing any two of the phase leads.

This operation can be performed by one set of contacts on the drum, while another set is used to vary the resistance or voltage from the taps of the auto transformer.

Fig. 294 shows a simple type of drum controller used for starting and reversing a three-phase A. C. motor. Two of the line leads running to the stator winding of the motor are taken through the contacts and segments of the drum for reversing the connections to the stator and thereby reversing the direction in which the motor will start.

The six upper sets of contacts and segments are used for gradually cutting out the resistance during starting, or if the resistance elements and contacts are made heavy enough they can also be used for varying speed during operation of the motor.

When the drum is moved to the left the segments strike their contacts in the order 1, 2, 3, 4, 5, as shown by the numbers on the segments. Each additional step cuts out a little more resistance; until, on the fifth step, the resistance units are all short-circuited and are cut entirely out of the secondary or rotor circuit of this slip-ring motor.

During the process of cutting out this resistance it is not always evenly cut out of each phase, as at certain times there is a little more resistance left in one phase than in another.

During starting, however, these periods are generally very short and the slight unbalance in the rotor currents does not seriously affect the operation of the motor.

When the controller drum is moved to the right, or in the opposite direction, the segments pass clear around and approach the stationary contacts from the opposite side in the order shown by the numbers which are placed near the ends of these segments.

In tracing the circuits through this controller and the resistance units, when the drum contacts are in the various positions, it will be easier to trace the secondary circuit by starting each time on the center wire from the motor and going through the

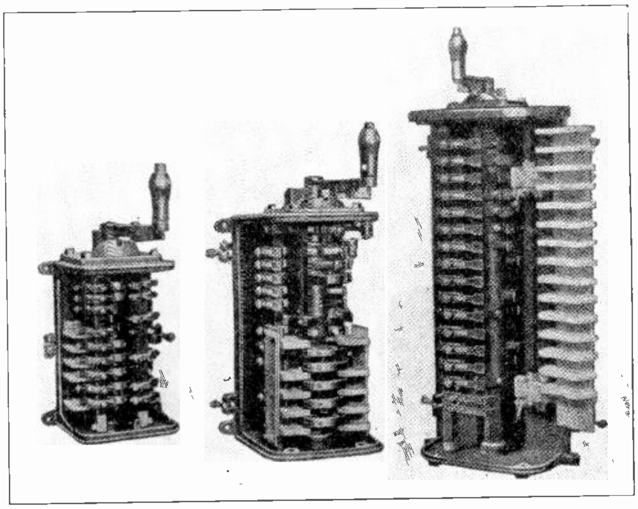

Fig. 293. Three drum controllers of different types and sizes showing the variety of arrangements that can be made with their contacts and segments. (Courtesy Cutler Hammer Mfg. Co.).

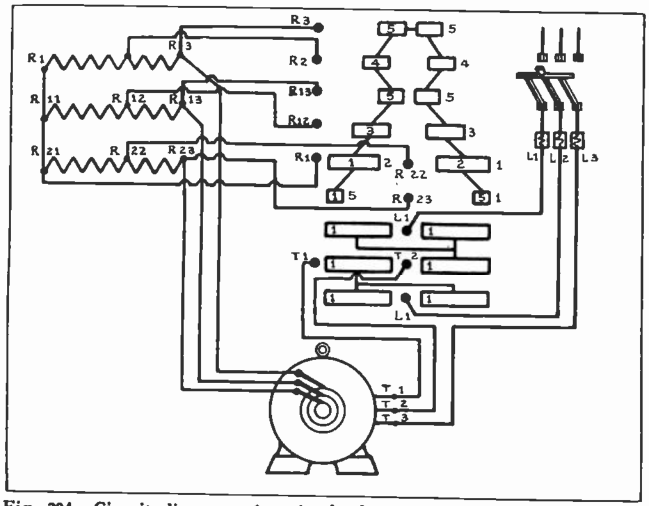

Fig. 294. Circuit diagram of a simple drum controller for starting and reversing three-phase, slip-ring motor. Trace the circuit carefully with the accompanying explanation.

proper sections of resistance, first to the left wire and then to the right wire.

It is not extremely important to trace out each circuit on the different steps of operation of controllers of this type because, when new drum controllers are being installed, the manufacturer generally supplies a connection diagram.

The connection diagrams shown in this section are used to show general operating principles, but it is well to remember that changes are continually being made in machines and methods of connections, and that correct diagrams for latest types of equipment can always be obtained from the manufacturers.

308. DRUM CONTROLLER CONNECTIONS

It is particularly important to get the connections of the resistance made to the proper stationary contacts on the drum controller so that the segments will cut out the resistance in the proper order.

Most new controllers and resistors have their terminals marked with corresponding letters and numbers, as shown in Fig. 294, thus making it a comparatively simple matter to properly connect them if the markings are carefully followed.

The resistance for three-phase drum controllers is generally divided into three equal sections, the ends of which are connected together in a star or Y connection as shown in Fig. 295.

One commonly used method of numbering the terminals of the resistance is to allow the numbers from 1 to 10 to represent one section of the resistance from Y to A; the numbers from 11 to 20 to represent the next section from Y to B; and the numbers from 21 to 30 to represent the third section from Y to C.

This plan can be followed even though each section doesn't use the whole ten numbers. The lowest number of each group is placed at the star connection. In the resistance shown in Fig. 295 there are only three divisions or four taps to be numbered on each section; so the numbers 1 and 4 are used on the upper section, 11 to 14 on the center section, and 21 to 24 on the lower section.

The resistance shown in this figure is for a controller which provides ten different speeds of the motor. The number of speeds which controllers are arranged to provide is usually a multiple of 3, plus 1; as, for example, 4, 7, 10, 13, 16, etc.

When motors are arranged for a number of speeds which is other than a multiple of 3, plus 1, they cut out two or more sections of resistance at once.

In connecting up a resistance such as shown in Fig. 295, or any other resistance using this system of marking, the points marked 1, 11, and 21 are connected together to form the star or Y connection.

The opposite ends, or lines A, B, and C, are then connected to respective brushes on the slip rings of the motor and also to the proper corresponding contacts on the drum control.

If you have to connect a resistance which is not marked, it is comparatively easy to place small tags on the terminals and then mark them in the manner shown in Fig. 295.

The marked secondary resistances of this type for use with slip-ring A. C. motors can be properly connected to a drum controller by the following procedure, even though no blue print is available.

First, place the controller handle in the off position and then move it to the first step or starting position. Note which of the controller fingers now rest upon the segments of the drum. There will usually be two in contact in this first position on non-reversing drums, and more on drums of the reversing type.

Ignoring the contacts which are used for reversing, connect to one of the other two a wire from the Y connection of the resistance, and to the remaining contact connect a wire from terminal 2 of the resistance.

Next, place the handle of the controller in the second position, note the contact which is thus brought into connection with the segment, and connect to it a wire from terminal 12 of the resistance. At each successive step or position of the controller handle another finger will be brought to rest upon a new contact, and to each of these successive fingers connect wires from the resistance terminals in the order—2, 12, 22; 3, 13, 23; 4, 14, 24; etc.

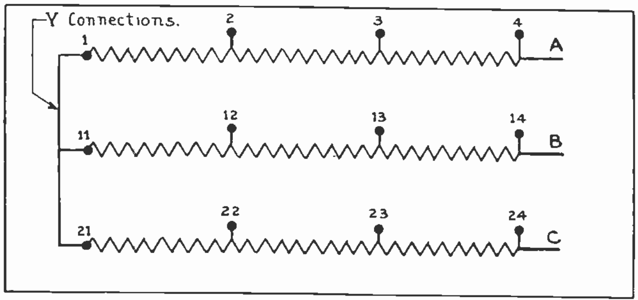

Fig. 295. The above sketch shows a common method of marking resistance units for use with drum controllers.

If the controller is of the reversing type there will sometimes be only one finger resting upon a segment in the first position. In this case, attach the Y connection to this finger and for the remaining connections proceed as previously explained.

Be careful to note that as the controller handle is moved, the contact for each new position may be found on either the right or left-hand finger-board of the controller. In other words, the contacts which are made in order—1, 2, 3, 4, etc., may not all be on the same finger-board. The finger-board is the strip on which the contact fingers are mounted.

This general method or procedure of connecting resistance to drum controllers is often very handy and valuable for a man to know when out on the job, because in many cases the diagrams for certain controllers may have become lost or resistances may be used which are not marked when supplied.

Fig. 296 shows a connection diagram for a three-phase drum controller used with a hoist motor for providing five speeds and for reversing duty. This diagram shows, in addition to the drum controller, a line oil switch and magnetically-operated contactor, thermal overload-relay, and the motor windings, which are equipped with separate leads so that the machine may be operated on either 440 or 220 volts.

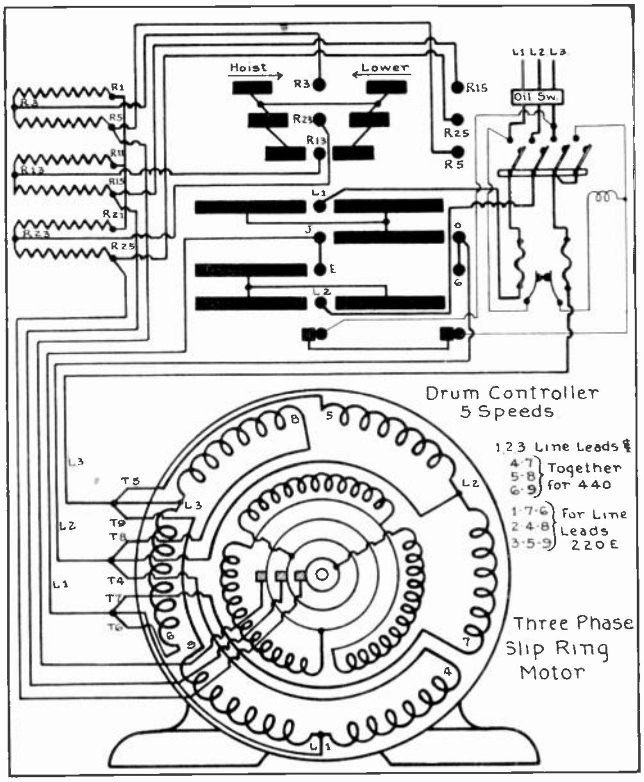

Fig. 296. Wiring diagram of a speed-regulating controller connected to a slip-ring motor. Carefully trace the circuits both to the stator and rotor of this machine.

Fig. 297 shows a connection diagram for another type of drum control. This diagram is of the type furnished with equipment manufactured by the General Electric Company and uses a different system of numbering. However, if you follow the numbers on any diagram or blue print of this type, it is a very easy matter to make the proper connections between the resistance and controller, and also to the motor and line.

This particular diagram also shows the terminals of a line switch or contactor which is operated by remote push-button control.

The wiring diagram for this switch is also furnished by the manufacturers upon request from customers who may be installing such equipment.

309. STAR-DELTA STARTERS

Squirrel-cage induction motors which have their stator windings connected for delta operation sometimes have the start and finish leads of each phase brought out to a three-pole double-throw switch so that the windings can be changed to star for starting the motor at reduced voltage.

This reduces the voltage applied to each section of the winding to 57.7% of the normal voltage applied to the delta winding when the motor is running. This provides a very simple and economical method of starting motors at reduced voltage.

However, this method is not extensively used because it only provides one starting voltage and because it can only be used on motors that are to be operated with the stator windings delta-connected. Nevertheless, it is often a very convenient method of starting squirrel-cage induction motors in an emergency when no compensator is available.

Fig. 298 shows a method of connecting the start and finish leads of a stator winding to the three-pole switch for star-delta starting of an A. C. motor. The

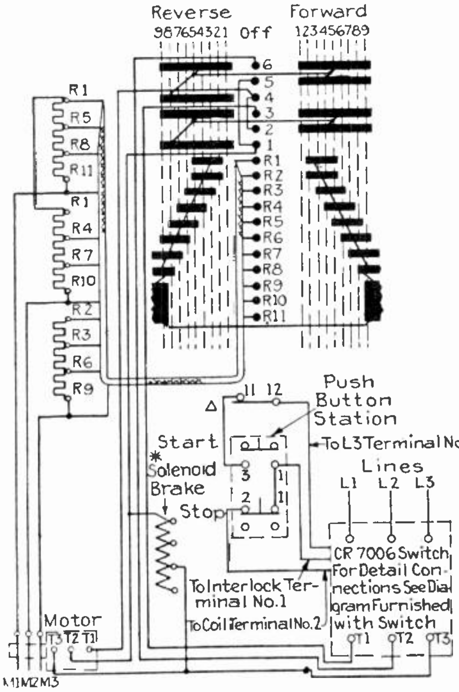

Fig. 297. Wiring diagram of a General Electric drum controller for starting, reversing, and speed regulation of a three-phase, slip-ring motor. Note how the numbers simplify the making of proper connections, even though the wires from the resistance to the drum contacts may be bunched in a cable.

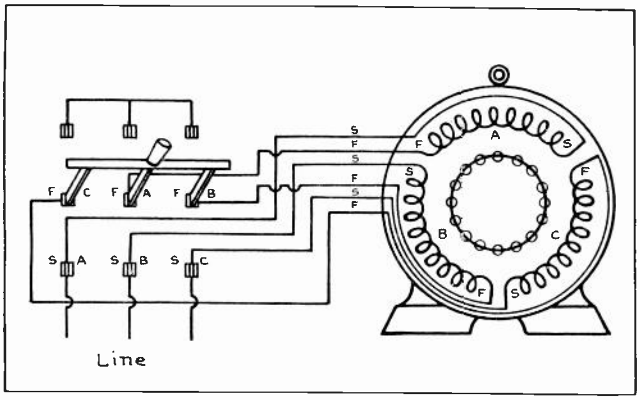

Fig. 298. This diagram shows the method of using a three-pole, double-throw switch for star-delta starting of squirrel-cage induction motors.

clips on one side of the switch are all shorted together to form the Y or star connection for starting.

The starts of all three phases are connected in rotation to clips on the opposite side of the switch, and the finish leads of adjacent phases are connected to the blades in such a manner that when the switch is thrown down in the running position the start of one phase will connect to the finish of the next, etc.

To start a motor in this manner the switch is first closed in the upper position which connects the phase windings in star and applies 57.7% voltage to them. When the motor speed has increased as much as it will with this connection and no further increase of speed can be noted, the switch is then quickly thrown to the lower position connecting the windings delta so that they receive their full rated voltage from the line.

310. INSTALLATION OF CONTROLLERS

When installing controllers it is general practice to locate them near the motor, in order to shorten the leads between the controller and motor as much as possible.

In many cases, however, it may be much more convenient to have the controller located at some distance from the motor, where it is within easier reach of the operator of the machinery which is driven by the motor.

Controllers are frequently mounted upon a post or pillar or on the wall of the building in which they are installed. In other cases they are mounted on frames of angle iron or steel piping.

Regardless of whether the controller is located within a few feet of the motor or at some distance from it, the circuits between them should generally be run either in rigid conduit, flexible conduit, or B. X.; and good, secure connections should be made between the conduit and the frame of the motor and also between the conduit and the controller box. This insures a complete ground circuit between the devices and is a necessary safety precaution.

Flexible conduit is a very convenient material for running the wires between motors and controllers because it is easily bent to fit the openings and attachment fittings on the machines, and to run along motor frames or bases or along the walls or machines to which it is attached.

Fig. 299 shows a photo-diagram of a synchronous motor and its exciter-generator, starting compensator, overload-relays, and meters; and the various connections or wires between them. These wires are merely drawn in the photograph to show their position in this figure, but in an actual installation they would be enclosed in rigid or flexible conduit; or B.X. which has the right number of wires for the different runs can be used.

Fig. 300 shows two views of induction motor installations, but doesn't show the supports for the controllers. On the left is a squirrel-cage induction motor equipped with a starting compensator; and the wires running between them are enclosed partly in rigid conduit and partly in flexible conduit.

On the right is shown a slip-ring induction motor with an oil switch in the line circuit to the stator, and a drum controller and resistance in the rotor circuit for starting and speed variation.

The wires between these units are run in rigid conduit which is attached to the motor and controller by proper fittings.

Three-hole porcelain covers are used in the fittings on the ends of the conduit where the connections are made to the slip rings and to the oil switch.

The use of flexible conduit where the leads attach to the motor is a decided advantage when the motor must occasionally be shifted to loosen or tighten the belt. The flexible conduit allows this to be done without changing any of the wiring or piping.

Controllers should always be securely mounted so that they will not sway or vibrate when the handles are operated.

311. CARE AND MAINTENANCE OF CONTROLLERS

There are several parts and devices on motor controllers that require frequent inspection, adjustment, and maintenance to secure the best operation of the controllers.

Controller contacts are always subject to a certain amount of burning or pitting from the arcs which are formed when the contacts make and break the circuit. This is true even though they may be operated in oil or with blow-out coils and other devices to quickly extinguish the arcs, and it is particularly true where the controller is used frequently for starting and stopping or varying the speed of the motor.

To provide efficient operation of the motor, the controller contacts must be kept clean and bright, and of the proper tension and contact adjustment. When these contacts become pitted or burned they should be smoothed off, first with a coarse file and then finished down with a fine file.

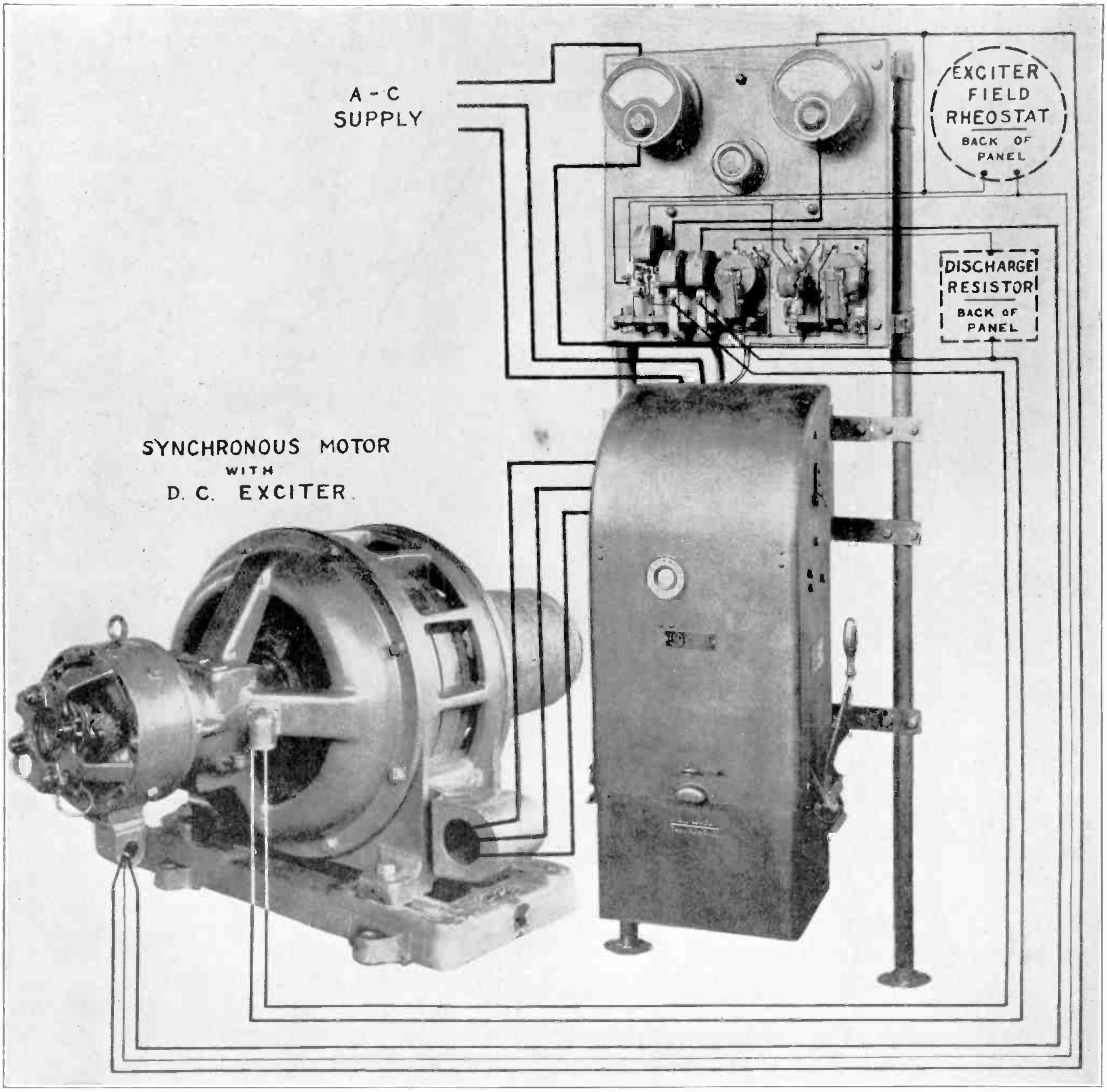

Fig. 299. This photo-diagram shows the arrangement of the connections between a synchronous motor and its exciter, and the controller and instruments used with it. On an actual installation these wires would, of course, be run in conduit or B.X. The three-phase line circuit through the compensator to the stator of the synchronous motor is shown by the heavy lines. The exciter and field circuits are shown by the lighter lines. (Courtesy General Electric Co.).

This operation can be most easily performed by removing the contacts from the controller and holding them in a vise, and a better job can usually be done if a new contact is used as a pattern for reshaping the old ones.

Sharp corners and edges on sliding contacts or segments of drum controllers should be carefully smoothed and rounded off, as shown at A in Fig. 301.

At B in the same figure is shown a set of contacts which are not properly rounded off on the corners; and the stationary contact finger in this view is not set in the proper position. When the controller segment is moved in the direction indicated by the arrows it will jam against the tip of the contact finger and probably bend this contact out of shape.

When placing a new or repaired contact back into service its surface should be given a thin coating of vaseline. This will prevent excessive wear and scratching and cause the contacts to wear with a smooth surface.

Contact faces or surfaces should always be parallel with the faces of the segments or other contacts against which they fit or slide, as shown in Fig. 301-C.

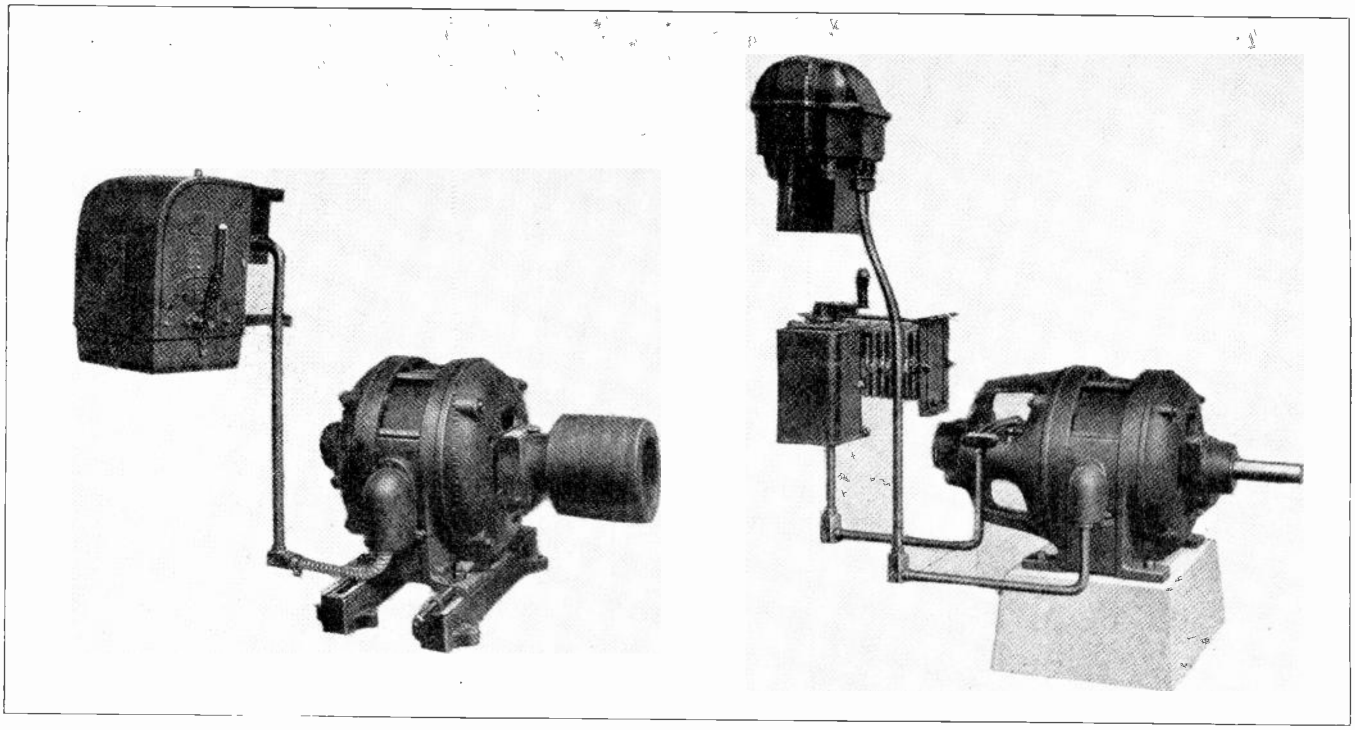

Fig. 300. The above two views show methods of connecting compensators and drum controllers to induction motors by means of rigid and flexible conduit. While in some temporary installations open wires which are properly supported and protected may do very well, in general a neat, permanent installation of the wires in conduit is a much safer and better arrangement.

If these contacts are allowed to get out of alignment as shown in Fig. 301-B it will result in high-resistance contacts and probably in serious overheating or burning of the contacts.

The contacts should be carefully adjusted as to position and spring tension. When adjusting the tension on the contacts of drum controllers it is a good plan to move the controller handle occasionally and determine by the feel whether or not the tension is too great. One should be able to move the handle freely with one hand and yet be able to feel a reasonable amount of pressure when the segments make contact.

Sometimes controllers which operate hard or stiffly should have a few drops of oil placed on the controller shaft where it rubs on the bearings at each end, and a light application of vaseline to the contacts will often make them wear smoother and run more easily. If the controllers are allowed to operate hard or stiff it often results in their being abused or jammed by the operators.

All terminals should be frequently inspected, cleaned and kept securely tightened, so that they make good contact with the wires at all times.

If a thin coating of vaseline is applied to the terminals after they are cleaned it will prevent corrosion and keep them in much better condition.

Arcing barriers that are badly burned or broken should always be promptly replaced to prevent the serious damage which might otherwise result from flash-overs between the different sets of contacts.

312. CARE OF OIL USED ON OIL-IMMERSED CONTACTS

On controllers in which the contacts are operated under oil the oil should be frequently inspected, and renewed whenever it becomes dirty or blackened by the burned materials from the contacts.

Dirt and carbonized contact material, if allowed to remain in the oil, greatly reduces its insulating quality and also reduces the ability of the oil to extinguish or quench the arcs at the contacts.

Dirty oil is also likely to cause flash-overs between phases and to the grounded metal case of the controller. One severe flash-over of this kind is likely to be much more expensive than the cost of several changes of oil.

After removing dirty oil from a controller the tank should be thoroughly cleaned and again filled to the oil level marking before it is replaced on the controller.

The oil used in controllers and oil switches is of a grade similar to that used in transformers and, in fact, transformer oil is very frequently used for this purpose.

313. PROTECTIVE RELAYS AND AUXILIARY CIRCUITS

All relays for overload and under-voltage protection should be kept properly adjusted and in good condition, in order to protect both the motor and controller from serious damage in case of overloading or failure of voltage. These protective devices generally give very little trouble except for occasional breakage of the small wires connected to them or the working loose of terminal nuts and connections.

Their contacts should be inspected occasionally to see that they are not burned or stuck together but are working freely and making a good contact and have bright, clean surfaces.

The auxiliary circuits of controllers do not carry power or load current, but are the ones which connect to the start and stop buttons, starting and running contactor magnets, overload and under-voltage relays, etc.

For these circuits No. 12 wire is generally used, although in some cases No. 14 or No. 16 is used. Asbestos-covered wire insures greater reliability and longer life on these circuits. These wires should require very little attention or care, provided they are located where they don't vibrate and where they are not rubbed by the moving parts of the controller.

314. CARE OF DASH POTS AND TIMING DEVICES

Dash pots and other forms of time elements on controllers should be carefully adjusted to allow the proper time for starting the machine. The oil in dash pots should be kept clean and occasionally renewed, and these devices should be filled only with oil intended for use in them, as other oils of different thickness or consistency may cause them to operate much slower or faster than intended.

Dirty oil in dash pots will often close by-pass valves or cause the piston or plunger to stick and fail to rise. The oil should be kept at the proper level so that it completely covers the piston when it is in its highest position.

If the piston stem becomes bent or the casing of the oil pot becomes dented, it will often result in sticking and failure of the dash pot to operate.

Careful study of this section on Controllers is very important because of the very great convenience and time saving and the economies which can often be effected by the selection and use of proper motor control equipment, and because of the added safety which these devices provide for operators as well as the protection they give to the motors and driven machines.

A great deal of your future success may depend upon your ability to properly install and maintain A.C. motor-control equipment, as this is one of the most important duties of the electrical maintenance man in many large industrial plants.

For this reason, you should very carefully and thoroughly work out each of the jobs on the actual controllers in the A.C. department, and carefully observe their features and mechanical construction and the operation of the auxiliary devices used with them.

Additional material on controller maintenance will be given in a later section on Installation and Maintenance of Electrical Machinery.

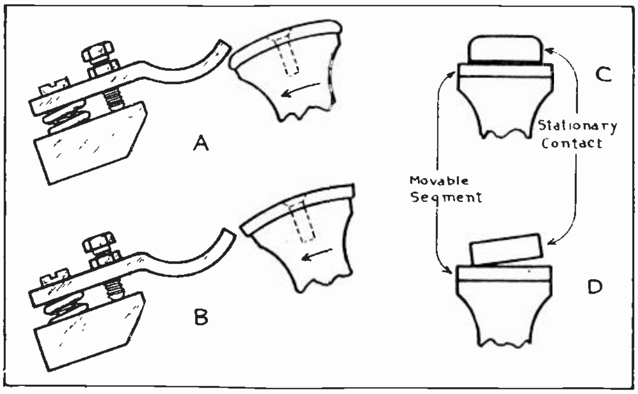

Fig. 301. At "A" is shown the proper shape and position of the segment and contact finger of a drum controller. At "B" is shown the wrong position and unrounded corners of these contacts. At "C" and "D" are shown the right and wrong positions of the stationary contact on the movable segment.

COYNE
Electrical School
CHICAGO ~~ ILLINOIS

ESTABLISHED 1899

ALTERNATING CURRENT
AND
A. C. POWER MACHINERY

Section Seven

Generating Stations
Location, Prime Movers, Boilers, Turbines
Electric Power Transmission and Distribution
Underground Cables, Overhead Lines
Conductors, Insulators, Poles, Towers
Line Calculations, Losses, Stresses
Erection, Maintenance
Lightning Arresters
Types, Connections, Operation, Care
Distribution Systems and Lines

GENERATING STATIONS

By far the greatest part of the electrical energy used in this country is generated in large power plants called **central stations**, although there are also a large number of smaller privately-owned power plants supplying electricity in industrial plants, hotels, office buildings, etc. In a number of small and medium sized towns and cities there are also municipally owned and operated plants.

Electricity can usually be generated much cheaper in large plants which have large highly efficient generators and equipment. So, in most cases the small user can buy power from the power company cheaper than he can generate it himself.

There are many cases, however, where electric power can be produced very cheaply in a privately-owned plant, if some other use is available for the low-pressure exhaust steam from the turbines or engines used to drive the generators.

In other cases waste gases or materials which are by-products of manufacturing plants, can be used as cheap fuel for generating steam to run steam-driven electric generators.

The lowest rates obtainable from the public utility or generating company and the dependability of their service should be carefully considered in comparison with the costs of fuel, operation, overhead, and interest on the investment of a privately-owned plant before recommending its installation.

Considerably more than two-thirds of the electric power generated in this country is produced by steam plants, and less than one-third by hydro-electric plants or water power.

Many people think that electric energy can be produced much more cheaply by water power than by steam plants. This is not always the case, because the cost of developing some water power sites is very high.

Another great drawback in the use of much of the available water power is that the best sites for its development are frequently long distances from any large towns or heavy users of power and very great losses would be involved in transmitting power over these great distances.

Some of the larger and more modern steam plants produce a kw. hr. for each 1½ lbs. of coal burned, and under other low operating costs, and these steam plants can therefore in many cases deliver power to their customers much cheaper than it could be generated and sent from the nearest water-power source.

Small privately-owned power plants which supply electrical energy to just one factory or building often generate their power at 220 or 440 volts, or the same voltage as that of the equipment which uses the energy. In plants supplying very large factories the generators are often operated at 2300 volts. Some large motors in the factory are then operated directly on this voltage, and smaller motors and lights have the voltage reduced by transformers.

315. SELECTION OF THE LOCATION OF A POWER PLANT

Steam plants can usually be located in or near some large town, and very close to the **load center** or heaviest users of electric power. In this manner a large portion of the electric energy they produce can often be sold within a radius of a few miles of the power plant.

It is, of course, desirable to locate any power plant as close to the load center as possible and thereby avoid unnecessary losses in transmission. There are, however, a number of other very important factors which enter into the selection of the location for a steam power plant. Some of these are: the availability or transportation of fuel, preferably by rail or boat; the availability of good boiler feed-water, and sufficient condenser water; ground values on the land required for the plant and fuel yards, switching equipment, etc.; and local building or zoning restrictions.

Large power plants which use coal for fuel are generally located at a railroad, river, canal, or body of water that accommodates boats or barges; as too much re-handling or hauling by trucks will add too greatly to the cost per ton of the coal.

Boiler feed water should preferably be of a grade that does not cause excessive scale formation in the boilers or corrosion of engines or turbines; although difficulties due to water impurities can often be largely eliminated by filtering and chemical treatment of the feed water.

Where condensing engines or turbines are used, a large volume of water is required for cooling the condensers which convert the exhaust steam back into water for the boilers to use again.

In some parts of large cities ground values are so high that taxes and interest on the money invested in the land would make it impractical to locate a power plant there. In such cases the generating plant is usually located nearer the edge of town or in some manufacturing district where property values are lower.

Zoning laws often prohibit the location of any buildings of the nature of a power plant or factory in certain sections of cities. Many of the more recently built power plants and substations are very attractive buildings and thereby a great deal of the objection which was formerly raised against the appearance of power plants has been eliminated.

Fig. 302 shows a large modern steam-driven gen-

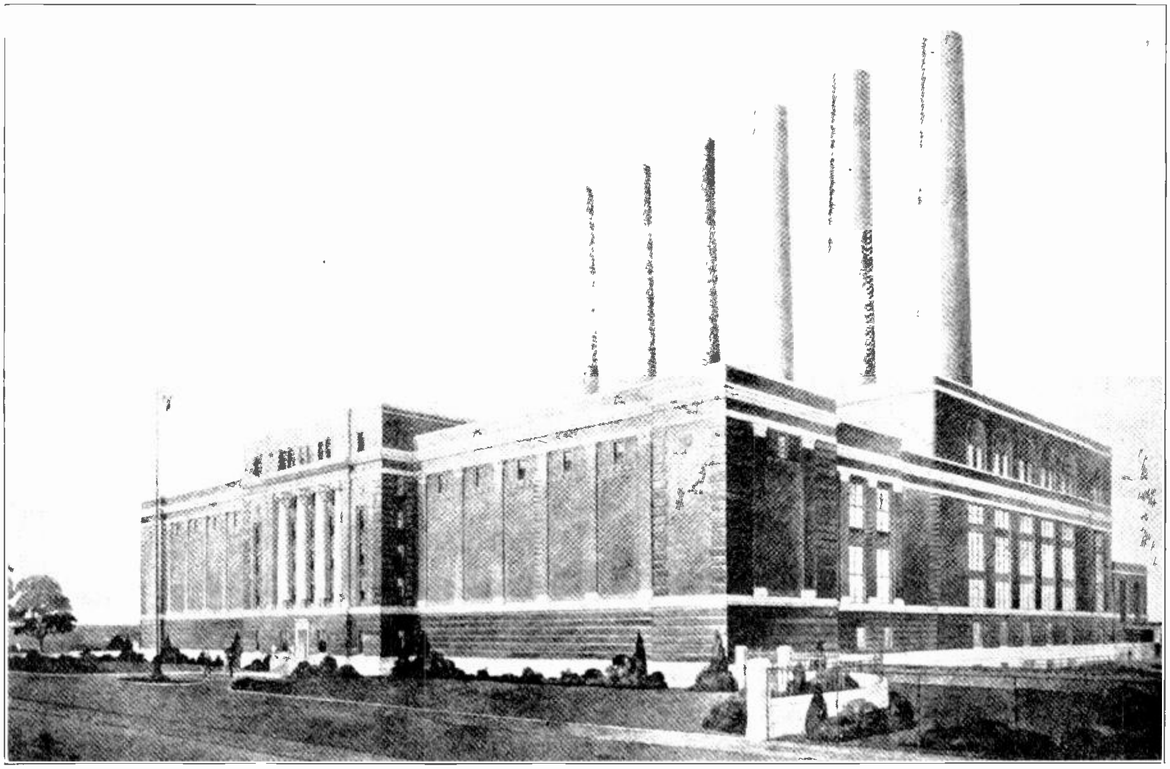

Fig. 302. This photograph shows an exterior view of a large modern central station generating plant of the steam-operated type. Note the very neat and attractive outside appearance of this plant.

erating plant with a very attractive building and front appearance. The fuel storage yard and the river from which condenser water is obtained are at the rear of the plant.

Fig. 303 shows at P.H. a power house near the river and railroad, for its supply of coal and condensing water, and feeding power at high voltage into substations in the city. The substations step the voltage down and distribute the energy to their various sections of the city.

A modern central-station, steam-power plant will produce less smoke while burning 100 tons of coal than an ordinary steam locomotive or small factory produces in burning one or two tons. This is because of the highly efficient stokers and boiler furnaces used, and the carefully regulated draft to the furnaces, etc.

316. CHOICE OF PRIME MOVERS

The choice of prime mover to be used in a power plant depends on the type and price of fuel available, whether or not condenser water can be had, and upon the class of service the plant is intended for.

In large central stations **steam turbines** are the most common form of prime mover, as they are very efficient and are well adapted to operation at high speeds and high steam pressures. They are also very compact and small in size for the tremendous amount of power they deliver.

Coal is by far the most common form of fuel used for producing steam, although there are in the western and southwestern states some generating stations that are operated with oil and gas fuel.

In large plants the coal is fed to the boiler furnaces by automatic stokers or traveling grates; and in many of the later type plants the coal is pulverized and blown into the furnaces with air, being practically exploded or burned instantaneously as it enters the white hot furnace. This method of

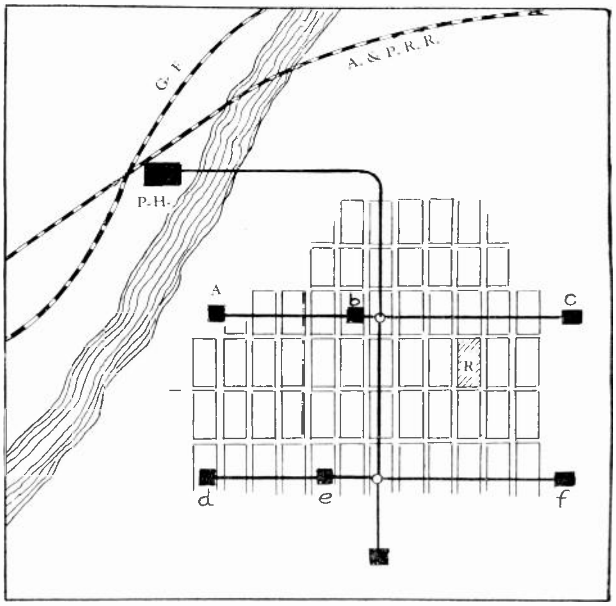

Fig. 303. This diagram shows how a power plant should be located near a convenient source of fuel supply and condenser water. Transmission and distribution lines then carry the energy from the power plant to the substations and consumers.

burning powdered coal is a very efficient one and creates very little smoke or ash.

Fig. 304 is a view of the interior of a large steam-operated generating station and shows four large turbine-driven generators in operation.

In smaller privately-owned plants either steam turbines or **reciprocating steam engines** are used. The steam engine, being well adapted to operation on lower steam pressures, lower speeds, and simple to operate, is often used to drive low-speed generators of the open type, as shown in Fig. 305.

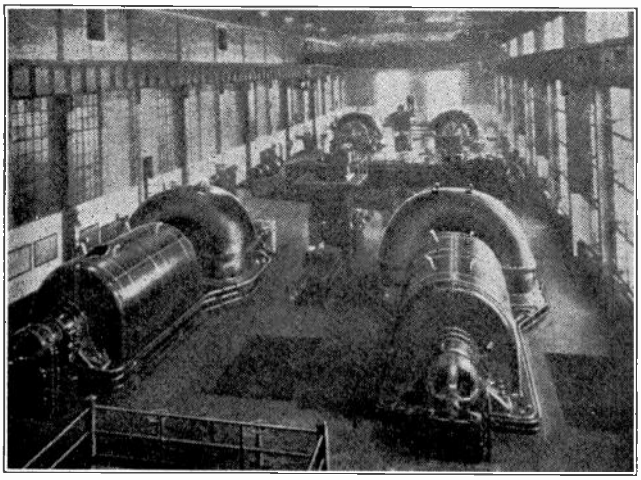

Fig. 304. Interior view of a large power plant showing several modern steam turbine-driven alternators.

In localities where coal and condenser water are difficult to obtain, and where oil is plentiful and cheap, **Diesel Engines** are often used as prime movers in generating plants. They are also very well suited for use in stand-by plants which are used only during certain hours of the day to help carry peak loads on other plants.

A Diesel engine operated unit can be quickly started and does not require previous firing up of boilers or the carrying of stand-by boilers to enable it to be quickly started and placed in service.

Diesel-operated plants require no condensing water, no boiler feed-water, no large fuel storage yards, and very little care and repair, as these engines are simple in operation and rugged in construction. Fig. 306 shows two large Diesel engine-driven generators in a power plant.

Diesel-operated plants require very little space and operate on low cost fuel oil, producing power at very low cost. Plants of this type are extensively used in oil field regions and are also coming into very general use for privately-owned and municipal plants. Diesel engine-driven generators are extensively used on electrically operated ships.

317. BOILERS, STEAM TEMPERATURES AND PRESSURES

In this section no attempt has been made to cover all of the details of the steam and mechanical equipment and operation in power plants, and such things as are not in the field of the electrical operator, but there are merely covered here certain points of general interest and importance which any electrical operator should know about the plant in which he may be working.

Boilers for producing steam are of two general types called **fire-tube** and **water-tube** boilers. Fire-tube boilers are those in which the hot gases from the fire box or combustion chamber pass through steel tubes which are surrounded by the water in the boiler. This type of boiler is used very little nowadays, except in smaller and older plants.

Water-tube boilers are those which have a large number of tubes connected to **drums** or **heads**, the water being contained in the tubes and lower drum, and steam in the top of the upper drum. The fire and hot gases from the combustion chamber pass upward between these water tubes and all around their surfaces, thus imparting the heat to the water inside the tubes.

Fig. 307 shows a sectional view of a modern water-tube boiler and combustion chamber. The coal hopper and stoker mechanism are shown at A, the grates and fuel bed at B, the combustion chamber or fire box at C, and the ash pit at D. The hot gases first pass upward between the boiler tubes, and then to the right and slightly downward over the **baffles** and on out to the smoke stack.

Fig. 308 shows a diagram of another type of water-tube boiler in which the tubes are straight and are fastened to flat vertical "headers" at each end. The furnace of this boiler has a water-cooled inner wall, in the tubes of which the boiler feed-water is heated to quite an extent before entering the boiler proper.

This boiler is fired with pulverized coal, and the coal hopper, pulverizer, and chute or pipe which carries the powdered coal to the boiler furnace, can all be seen in this diagram. The hot gases pass up between the right-hand ends of the boiler tubes, then down between a set of baffle plates and through the center section of the tubes, and finally up be-

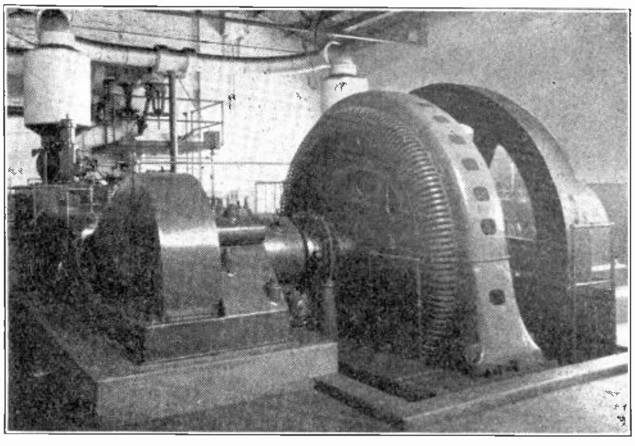

Fig. 305. This photo shows a direct connected steam engine-driven alternator in a small power plant. Note the flywheel used to stabilize the alternator speed and smooth out the pulsations of the engine strokes. Courtesy Allis-Chalmers Mfg. Co.

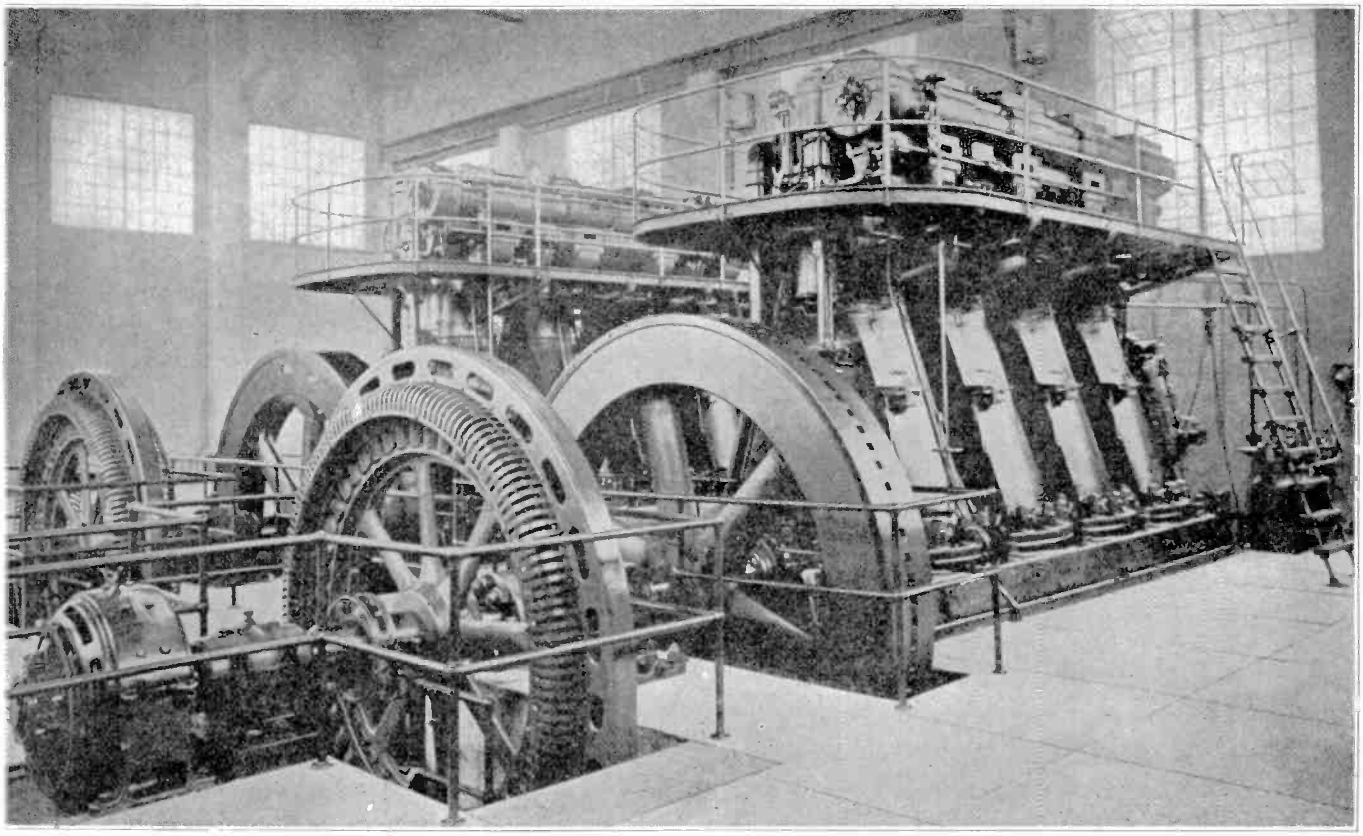

Fig. 306. Oil burning diesel engines of the above type are very commonly used as prime movers for generators in small and medium sized power plants. These engines are very economical in fuel cost and are simple and easy to operate and maintain. They are particularly desirable for use where coal and condensing water are difficult to obtain and where only limited space is available for a generating station.

tween the left ends of the tubes. From here the gases pass through an economizer, or another set of tubes, where they give up still more of their heat to the boiler feed-water, before passing on out of the stack.

Fig. 309 shows a sectional-view diagram of another modern type of power plant boiler using pulverized coal and having multiple sets of tubes and drums above the combustion chamber. In this boiler the powdered coal is blown downward into the combustion chamber from the tube at the upper left corner, and literally explodes as it strikes the white hot, roaring interior of this furnace.

Modern power-plant boilers have motor-driven draft fans operated by variable speed motors for accurate control of the draft, and in some cases the draft air is preheated by stack gases before being fed to the furnace. Some plants use exhaust steam from the turbines and also the partly-cooled furnace gases to preheat the boiler feed water. By these methods very high efficiency is obtained.

Power-plant boilers commonly produce steam at pressures ranging from 200 to 600 lbs., and in some cases as high as 1200 lbs. or more, per square inch; and at temperatures ranging up to 700 degrees F. and higher.

To obtain steam at such high temperatures extra tubes and drums are provided in the upper section of the boiler just to heat the dry steam after it has been produced in the main boiler. These extra heater elements are called superheaters.

318. EXHAUST STEAM CONDENSERS

In modern power plants the steam which is exhausted from the turbines or engines is condensed

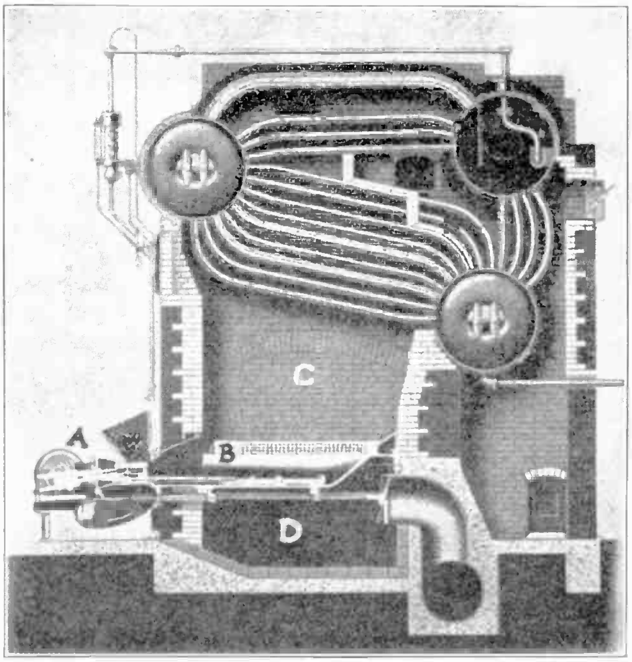

Fig. 307. Sectional view of a water tube boiler with an automatic stoker to feed the coal to the burners or combustion chamber "C".

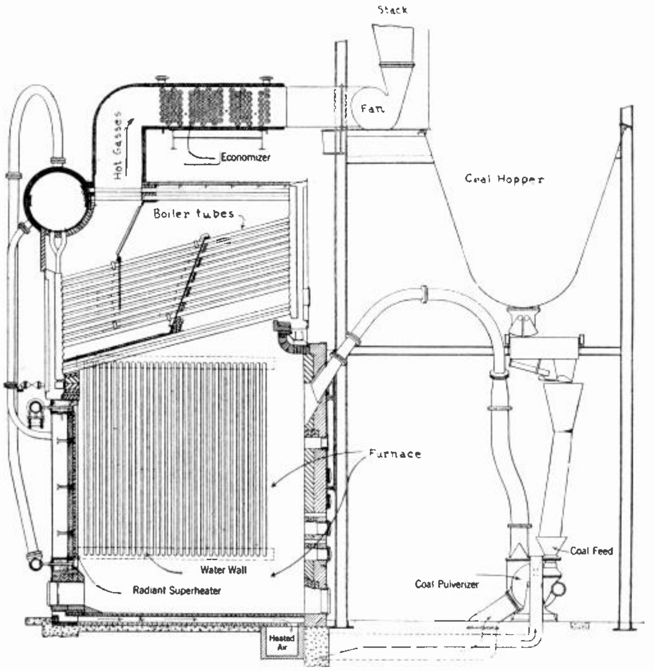

Fig. 308. Diagram of a modern power plant boiler using pulverized coal for fuel. Note the coal hopper, pulverizer, furnace feed tube, and also the economizer which is located above the boiler.

back into hot water and is used over and over again in the boiler. This saves a great deal of heat energy that would otherwise be wasted in exhaust steam and also reduces the cost of filtering and treatment of the boiler water.

In some plants this last item alone is quite a large one because the boiler feed-water has to be chemically treated to prevent it from depositing large amounts of scale in the boiler tubes. This scale, if allowed to accumulate, interferes with the transfer of heat from the tube walls to the water and greatly reduces the efficiency of the boilers.

The water which is taken from the condensers is much warmer than fresh feed water would be and is frequently heated up still more before being passed back to the boiler.

319. STEAM CYCLE

Fig. 310 shows a simple diagram of the steam cycle in a power plant. The water in the main boiler, B, is evaporated into steam and the steam is then heated to very high temperature by means of the superheater, S. From here the dry steam is fed through an insulated pipe line to the turbine. Expanding through the blades of the turbine it delivers mechanical power to drive the generator and then exhausts from the lower side of the right-hand end of the turbine casing and into the condenser.

Here the steam passes over many hundreds of small copper tubes through which cold water is kept constantly circulating. The contact of the hot steam with these cool pipes causes it to condense back into warm water and run to the bottom of the condenser to a collector called the **hot well.**

In Fig. 310 the rotary pump, W.P., circulates a large volume of cold water from a river, lake, or pond, through the cooling tubes of the condenser. The small pump, C.P., takes the **condensate** or warm water from the hot well and sends it through a feed-water heater where the temperature of the water is considerably increased by a small amount of live steam which is bled off from one of the stages of the turbine.

From the feed-water heater the water goes to a multiple stage, high-pressure boiler-feed pump which forces it on through a **preheater** or **economizer** where the water is still further heated by the hot gases leaving the furnace and passing to the stack.

After this final heating the water again re-enters the boiler at high enough temperature so that it only requires the addition of a little more heat energy to once more evaporate it into steam.

A steam cycle of this kind greatly increases the thermal efficiency of a power plant, and it is such engineering as this along with improved design of modern generators which has kept the cost of electricity low, and in many localities reducing year by year.

It is a very interesting fact that over a period of years in which the price of food, clothing, and most all other commodities have increased considerably, the cost of electricity has not increased but instead has considerably decreased.

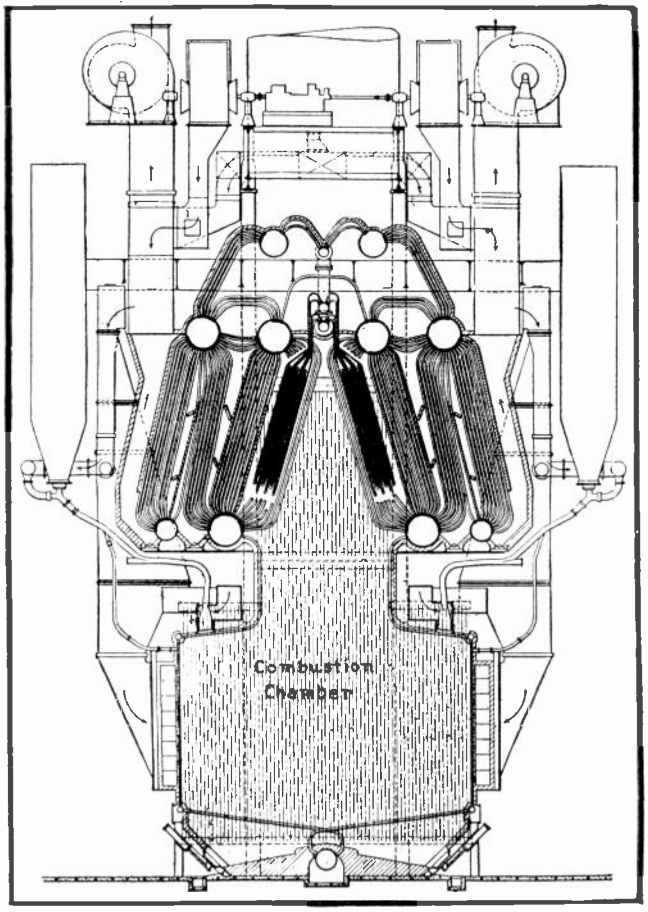

Fig. 309. Another type of large modern power plant boiler showing the combustion chamber, boiler tubes, super-heater, draft fans, etc.

Fig. 311 is a view in the interior of a large power plant and shows the end of the steam condenser directly beneath the turbines of one of the units. The size of the condenser and the circulating water pipe shown in this figure give some idea of the vast amount of water required for condensing the steam of a large generating unit.

320. STEAM TURBINES

Most everyone knows the general operating principles of an ordinary steam engine, in which the steam is admitted by a valve to first one end of the cylinder and then the other, so that its expansion pushes the piston back and forth. This piston is attached to the drive rod which in turn fastens to the crank pin on the shaft which rotates the fly wheel.

As the intake valve is opened admitting steam to one end of the cylinder, the exhaust valve on the opposite end is opened, allowing the expanded steam which has just finished its work in that end to escape. These valves operate in synchronism with the travel of the piston and with the proper timing to admit the steam each time to the end of the cylinder at which the piston has just completed its stroke, thus forcing it back again in the other direction.

In this article we shall not attempt to cover in detail the mechanical construction or operation of all the parts of steam engines. But there are a great many students who have very little conception of the operating principle of a steam turbine, and as this device is so commonly used in modern power plants, a brief, general explanation of its operation will be of interest.

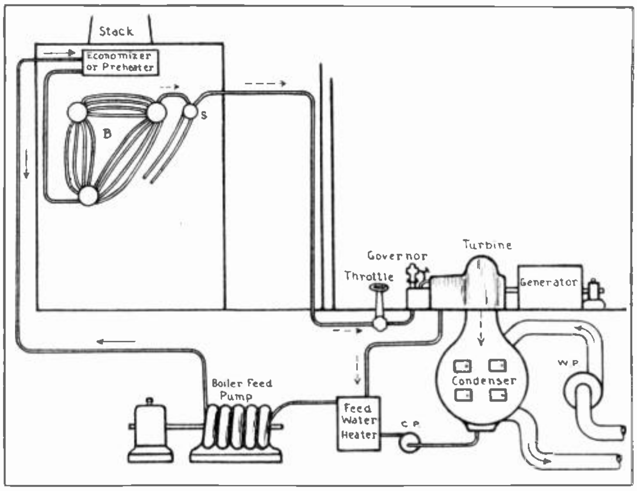

Fig. 310. This simple diagram illustrates the steam cycle or method of recirculating the boiler feed water in a modern power plant.

Steam turbines are of two general types, called the **impulse** type and **reaction** type. In the impulse turbine live steam is directed from small nozzles directly against the blades or buckets of the rotating members of the turbine. In the reaction turbine the steam is first passed through a set of stationary blades or vanes which direct it at an angle against a set of rotating blades located close to the stationary ones.

Large turbines are often made up of a number of these sets of stationary and rotating blades which are called **stages**; the several stages in the turbine being arranged so that the steam must pass through all of them before it finally exhausts to the condenser.

In this manner almost the very last bit of power can be extracted from the steam as it expands through one stage after another, with a loss of pressure and velocity at each stage.

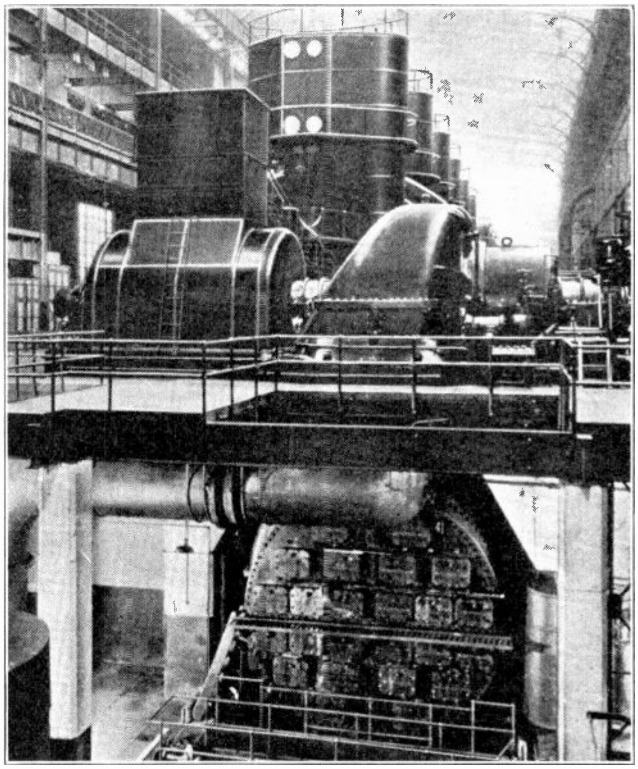

Fig. 311. This view shows a row of tubine-driven alternators above the power plant floor, and one of the large steam condensers below the floor and directly beneath the turbine in the foreground.

Fig. 312 shows a set of turbine nozzles and several sets of moving and stationary blades or buckets. By following the path of the steam as traced with the arrows in this sketch you will note that it is directed against the first set of moving buckets by the nozzles and then as it leaves the edges of these moving buckets it is redirected by the stationary blades against the next set of moving buckets, thus rotating them all in the same direction.

The same action is again repeated by the next set of nozzles and moving buckets, and so on throughout the several stages of the turbine.

Fig. 313 is a turbine rotor removed from its casing and shows the several sets of moving blades which are mounted on the outer edges of disks that are fastened securely to the shaft.

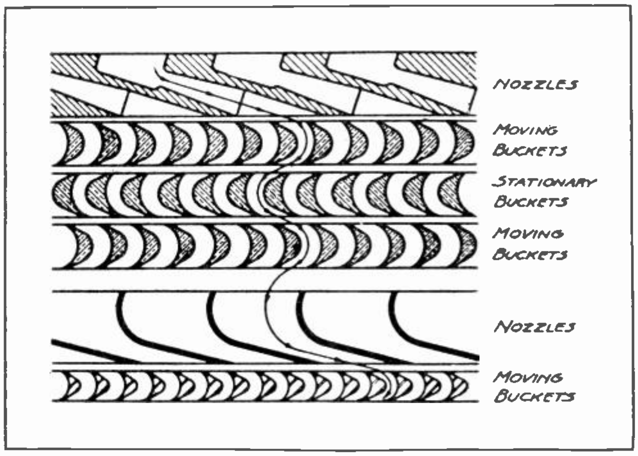

Fig. 312. This sketch illustrates the operating principles of a steam turbine. Note the nozzles and stationary and moving blades or buckets. Courtesy of Elliott Company.

Fig. 314 shows one-half of a turbine casing with the sets of stationary blades for each stage.

You will note that the casing is smaller in diameter and the blades shorter in length at the high pressure end where the steam is first admitted to the turbine, and that both become larger as the steam expands toward the low pressure or exhaust end.

Fig. 315 shows a sectional view of a turbine, which clearly illustrates the manner in which the steam enters the turbine at the right and then passes through the several sets of stationary and rotating blades or buckets which become larger toward the exhaust end. At this end the steam discharges from the enlarged portion of the casing to the condenser, which is usually connected directly beneath the turbine.

Fig. 316 shows a view in a large steam-driven power plant and in the fore-ground is a 165,000-kw. generator consisting of two units operated together as one. The turbines are both shown on the left and the generators on the right. The large tubes or ducts rising from the top of the generators and passing down through the floor at the right are air passages for cooling the generators. The unit in the rear is driven by the smaller high-pressure turbine, and the steam exhausts from this turbine through the larger low-pressure turbine which drives the unit in the fore-ground.

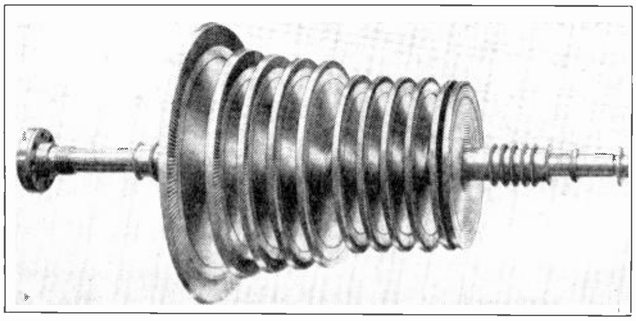

Fig. 313. Complete rotor of a modern steam turbine, showing several sets of moving blades through which the steam passes in succession. Courtesy of Elliott Company.

321. HYDRO-ELECTRIC PLANTS

There are throughout this country numerous hydro-electric generating stations producing millions of horse power. These plants are located along various streams and rivers where the water has considerable fall or drop within reasonable distances, and where it is practical and economical to erect power plants, and usually where dams can be erected or natural reservoirs obtained in which to store reserve water during high-water seasons, to keep the plant operating through low-water periods.

Hydro plants are also located near to or within economical transmitting distance of the cities or markets which will consume their power.

Fig. 317 shows the interior of a large hydro-electric generating station with five large vertical type, water-wheel-driven generators. The generator units and exciters are above the power plant floor and the water wheels are located below the floors and connect to the generators by means of vertical shafts.

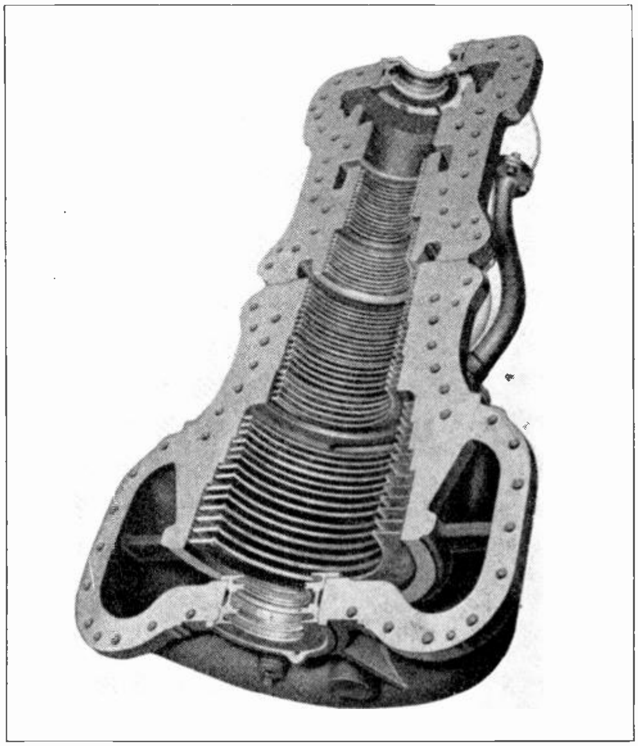

Fig. 314. One-half of a steam turbine casing showing a series of stationary blades between which the movable blades or buckets revolve. Courtesy of Allis-Chalmers Mfg. Co.

Hydro-electric developments usually require some form of dam. The dam may be a large one and produce the total fall by raising the level of the water from the base to the crown of the dam. In other cases only a small dam may be required to close off the flow of some stream high up in a mountainous region and store water in a natural reservoir at this elevation.

In either case the water is taken under pressure from the dam through a **penstock** or large pipe leading down to the turbine or water wheels at the

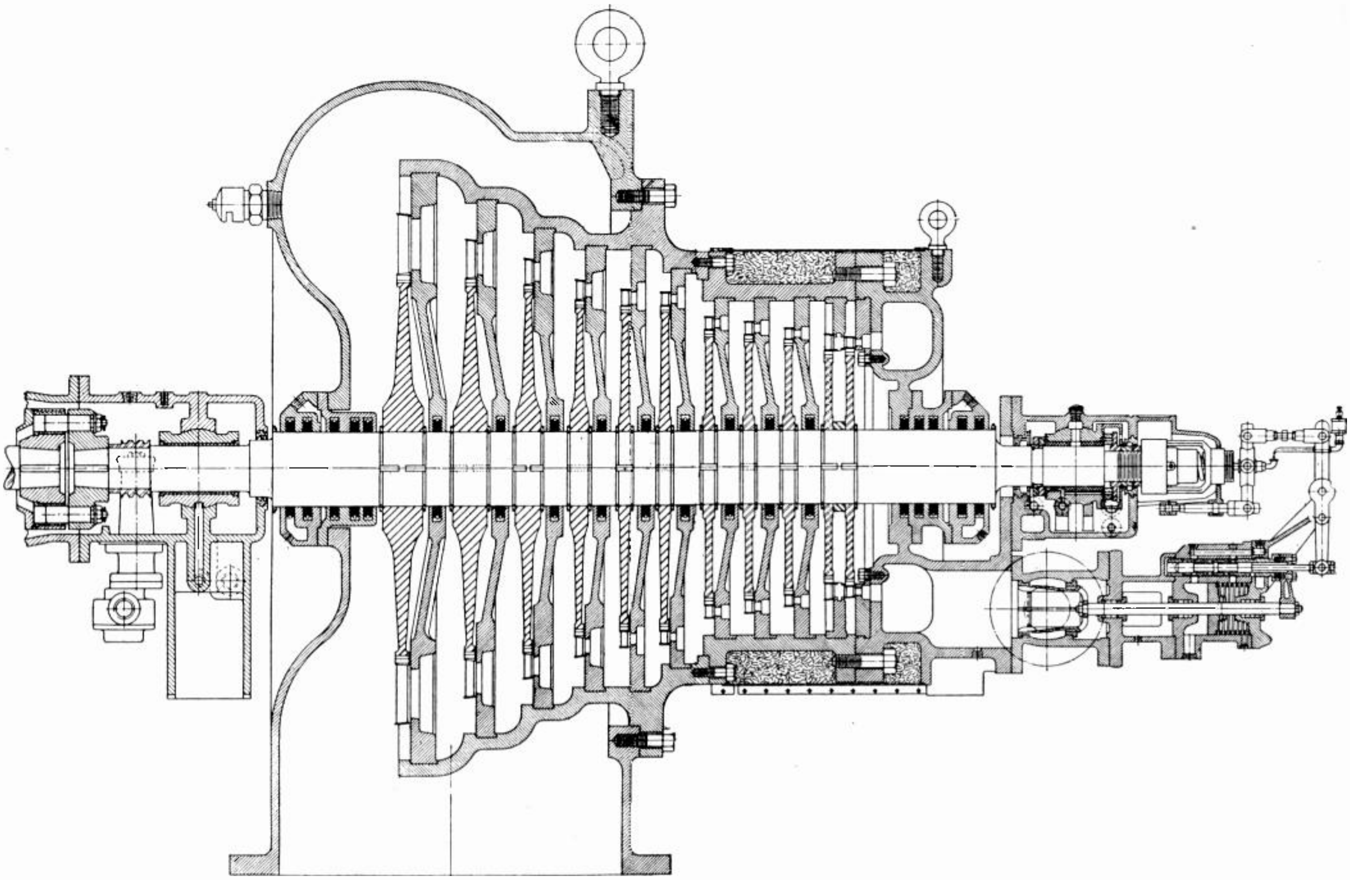

Fig. 315. An excellent sectional view of a modern steam turbine showing how the steam enters the high pressure end at the right and passes through one set of blades after another as it expands toward the exhaust end on the left. The stationary blades redirect the steam to apply its force against each successive ring of movable blades. Courtesy of Elliott Company.

power house, which may be located at the base of the dam or at the foot of the mountain, whichever the case may be. The water is then delivered through the proper valves and guide vanes to the blades or runner of the water wheel.

The horse power developed will be proportional both to the height in feet, or pounds pressure developed by this height, and to the volume of water which passes through the wheel. Some large water-power plants operate on a head or fall of only 10 or 12 feet, where enormous volumes of water are available at all times of the year.

In other cases some of the hydro plants in operation in the Rocky Mountain region of the western part of the United States utilize a height or fall of over 2,000 feet. This delivers the water to the buckets of impulse-type water wheels under terrific pressure and bullet-like velocity, and requires a much smaller volume of water to deliver a given amount of horse power.

322. WATER WHEELS AND TURBINES

Water wheels for operation with large volumes of water at lower pressure are generally of the reaction type, having blades somewhat similar to those of a ship's propeller and operating within a casing and set of guide vanes which direct the water against the blades of the runner at the proper angle to produce maximum efficiency and power.

Fig. 318 shows a sectional view of a large water wheel of this type. The generator is shown above and connected to the runner of the water wheel by a large vertical shaft. On the left can be seen a large floating valve which admits the water to the turbine. The water discharges from the turbine downward through the **draft tube** and out into the **tail race** in the stream below the plant.

In "high head" plants, where the water pressure and velocity are much greater, the water is often delivered from a tapered nozzle in a hard jet which strikes against the blades or buckets of **an impulse wheel** or Pelton turbine, and rotates the wheel and generator at much higher speed than those in low head plants.

Fig. 319 shows a row of generators which are driven by water wheels located beyond the wall at the right and coupled to the generators by horizontal shafts. This view is in one of the older plants at Niagara Falls. On the left can be seen the operating gallery and control board.

Fig. 320 shows a view in a smaller water-power plant with 560-kw. generators on the right and the switchboard on the left.

Fig. 321 shows a view in a small automatic hydro-electric plant in which the vertical-type generators are driven by water wheels beneath the floor and controlled automatically by relays on the switch-

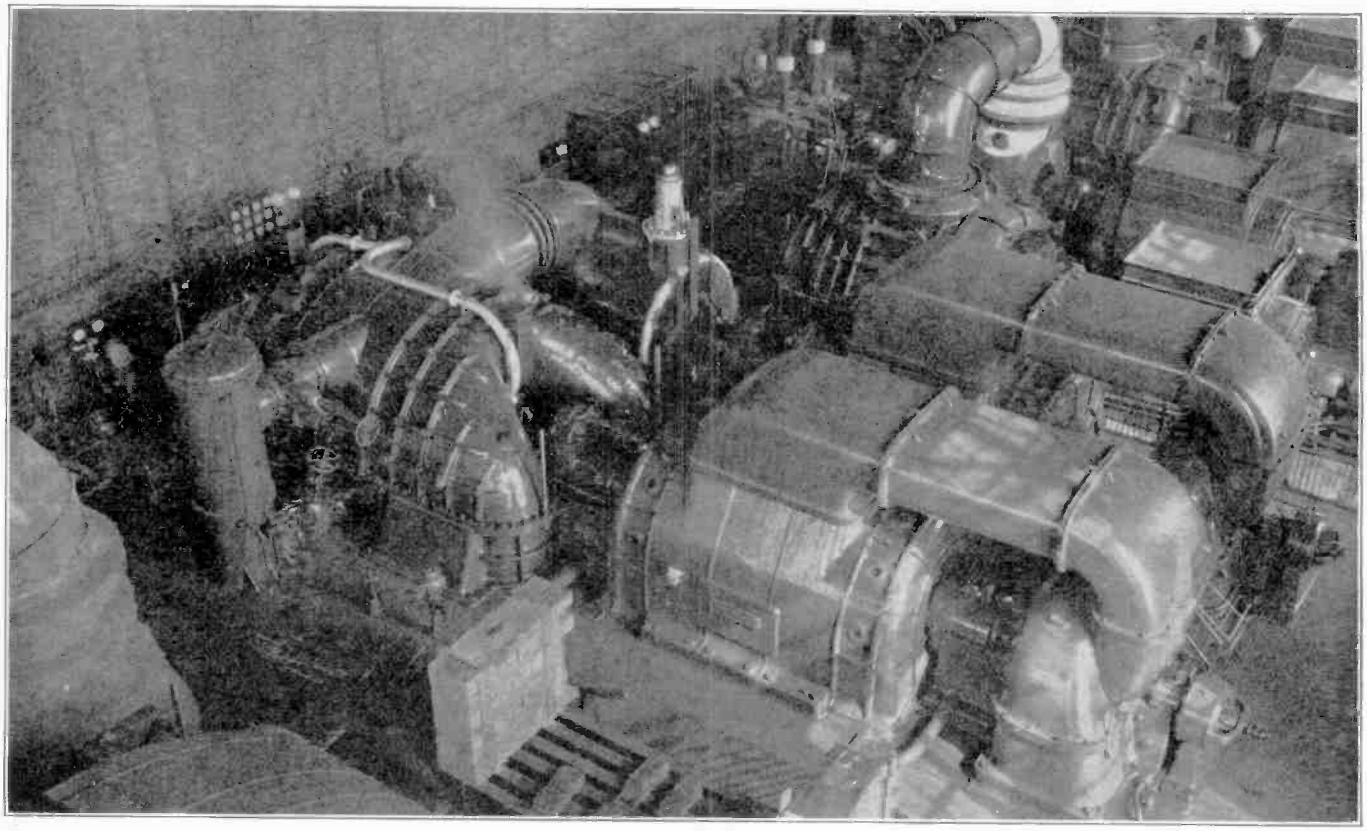

Fig. 316. The above photo shows a 160,000-kw. turbine-driven alternator in a modern central station. At the time of taking this photo this unit had just been installed and was under test. This same power plant has a number of other large turbine-driven alternators with which the new machine operates in parallel to help carry total load. Courtesy American-Brown Boveri Company.

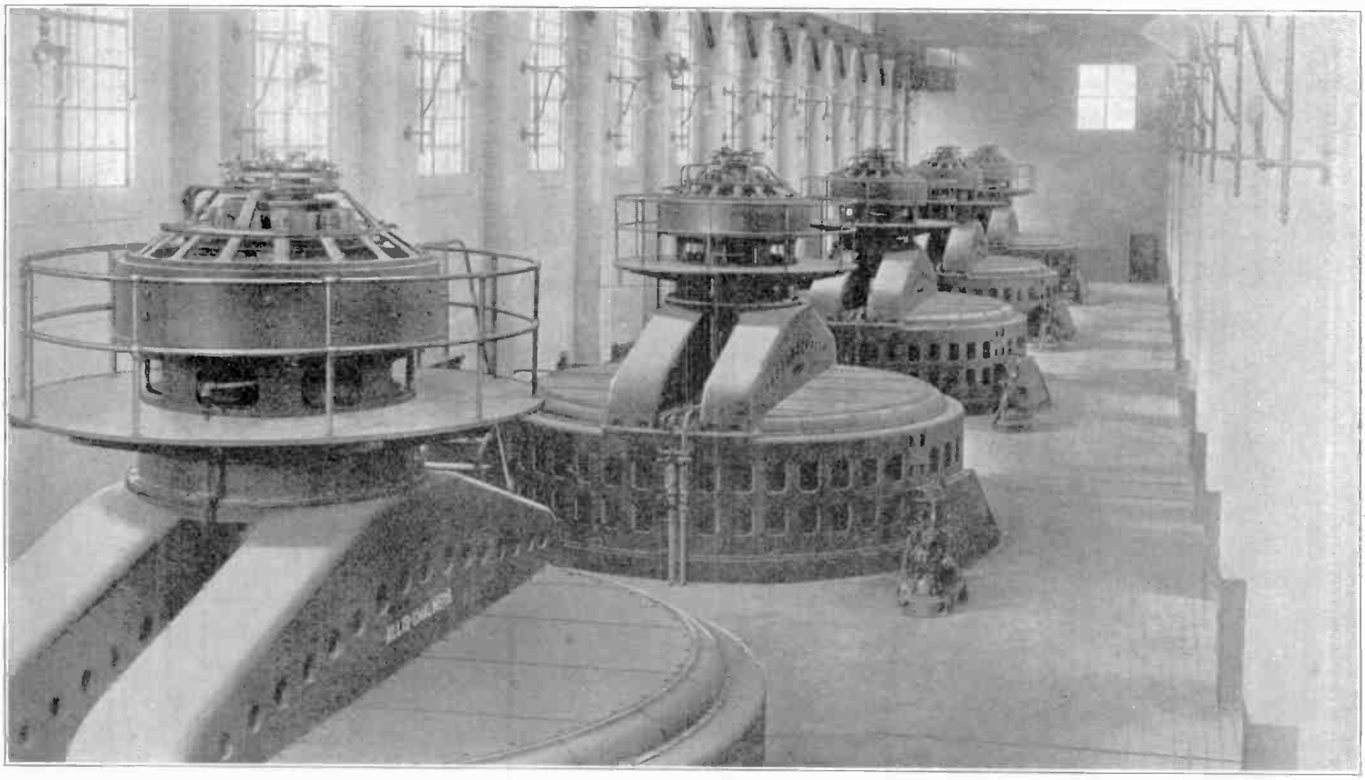

Fig. 317. Interior view of a hydro-electric generating station showing a row of large water-wheel-driven vertical type alternators. The water wheels are located beneath the generator floor and direct-connected to the vertical shafts of the generators. Each unit develops 17,500 horsepower at 100 RPM. Courtesy Allis-Chalmers Mfg. Co.

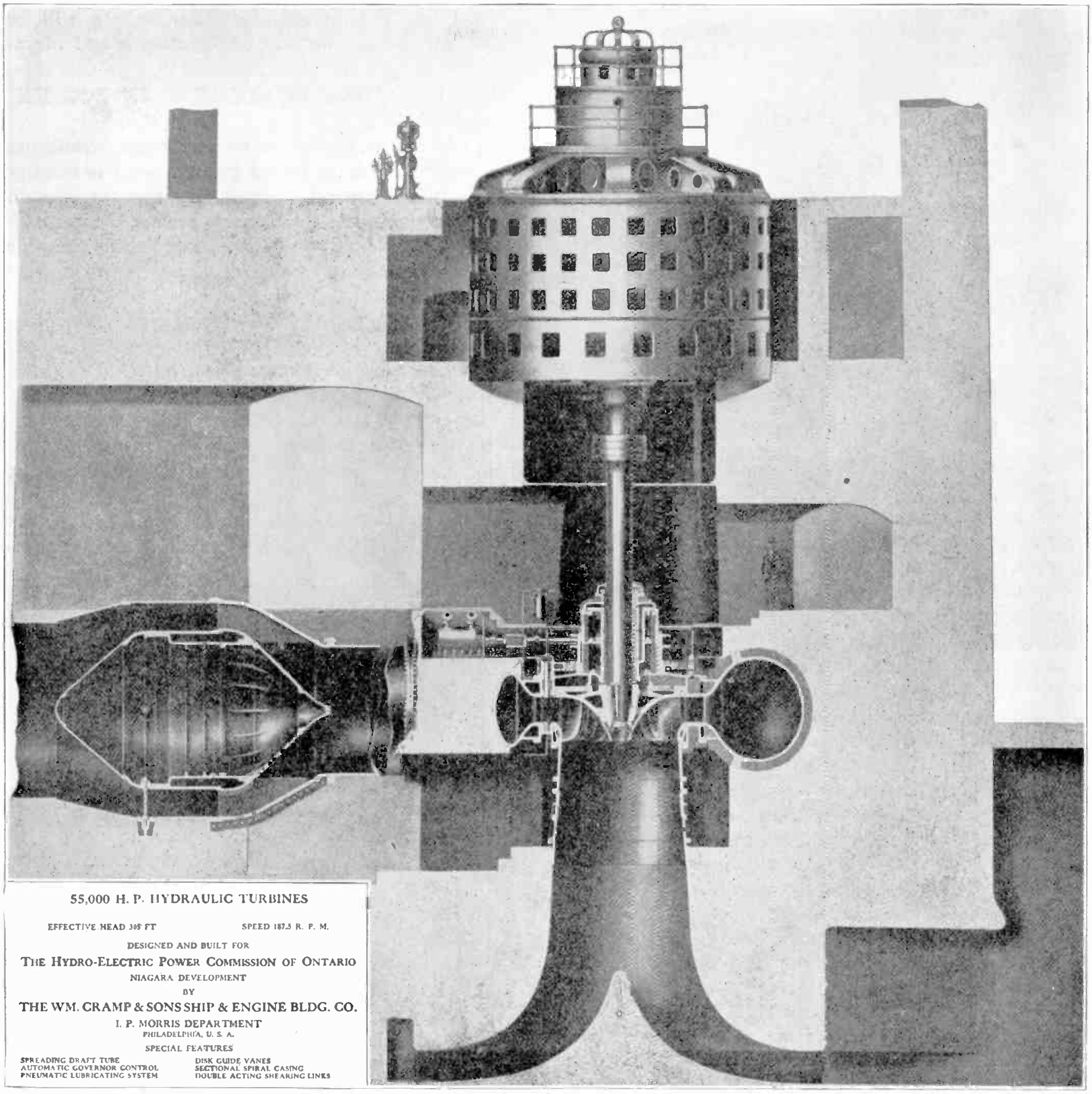

Fig. 318. Excellent sectional view of a large hydro-electric generator unit. Note the casing and runner of the water wheel and also the draft tube through which the water discharges to the tail race. The valve controlling the water flow through the wheel or turbine is shown on the left. The main part of the generator is set down in the concrete so that just the top of the unit and its exciter project above the operating floor. Courtesy Wm. Cramp & Sons Co.

boards shown in the background. Plants of this type are coming into quite extensive use for supplying power to small towns or to industrial plants which are located near to a convenient source of water power.

323. STARTING AND CONTROL OF PRIME MOVERS

In all power plants, whether they are operated by steam engines, steam turbines, Diesel engines or water wheels, the prime movers are equipped with throttle valves and governors. The throttle valves are used for starting up the prime mover and generator, and for adjusting the speed when paralleling one machine with another.

The governors are adjusted to maintain the proper speed-regulation with variations of load on the generator and thereby prevent the generator from over-speeding when load is removed, and from slowing down when the load is increased.

The proper operation of governors is therefore very essential in maintaining satisfactory parallel operation and proper voltage regulation to customers.

In some small plants the electrical operator may

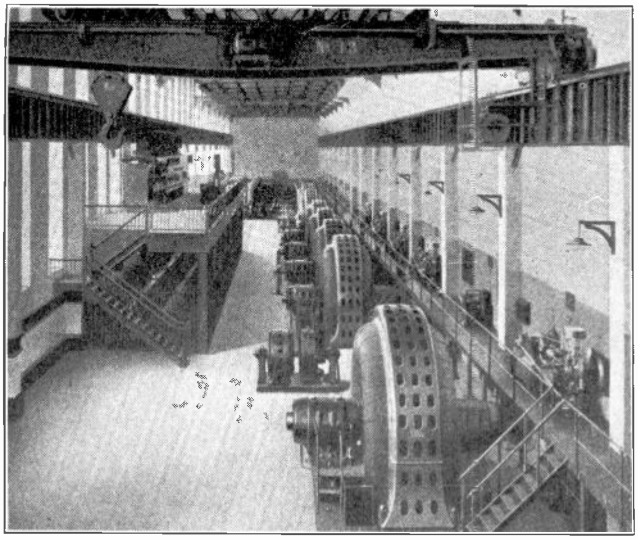

Fig. 319. Interior view of one of the power plants at Niagara Falls showing horizontal type water-wheel-driven alternators manufactured by Allis-Chalmers Mfg. Co. Also note the operating gallery and switchboard on the elevated platform at the left.

be required to start and take care of the prime movers as well as the generators. In large plants the prime movers are generally operated and maintained by a separate crew and the switchboard and electric operation is handled by the electrical crew.

Great care should always be used in starting prime movers and generators to start them gradually and give them the proper time to accelerate, and also in watching for any abnormal operation or indications during starting.

One should carefully check all switches in the generator circuit to see that they are in the proper positions before starting the machine, and the voltmeter and sometimes other instruments should also be carefully watched during starting.

Thorough attention should also be given to the lubrication of the prime mover before starting it, and if pressure lubrication is used the oil pumps should be started before starting the prime mover and generator. Some of the rules and steps to follow when starting generators were given in the section on A. C. Generators, and others will be given later in the section on Operation and Maintenance.

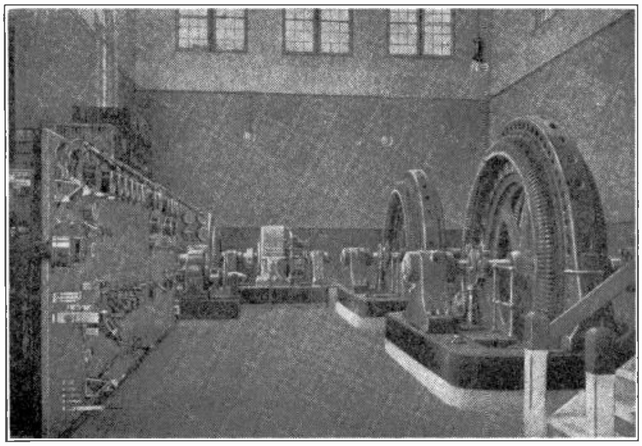

Fig. 320. View showing two small alternators and the switchboard in a hydro-electric station. Courtesy Allis-Chalmers Mfg. Co.

324. AUXILIARY EQUIPMENT IN POWER PLANTS

In addition to the prime movers, main generators and switchboards in power plants, there is usually also a certain amount of auxiliary equipment such as motor-operated boiler feed pumps, condensate pumps, vacuum pumps, circulating pumps, fans or blowers for cooling generators, and for boiler furnace draft, etc.

Many power plants also have step-up transformers, oil switches, and lightning arresters in an outdoor transformer and switching station, in addition to the bus oil switches inside the plant.

The care of switchboards, meters, transformers, oil switches, and auxiliary motor and control equipment in power plants often forms a very important part of the operator's duties.

In addition to the exciter-generators power plants are often equipped with small D. C. or A. C. auxiliary generators called **house generators,** for supplying power to the auxiliary motors and equipment, at lower voltage than that produced by the main generators.

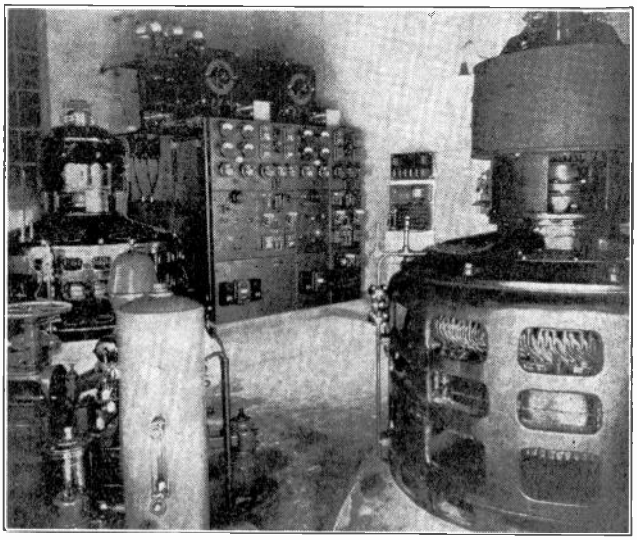

Fig. 321. Interior view of a small automatic hydo-electric generating station. The two generators can be seen in the foreground, and the switchboard in the background of this photo. Courtesy Allis-Chalmers Mfg. Co.

Large power plants are usually operated by remote control switchboards both for convenience and safety reasons. The remote control boards are equipped with the proper meters and instruments, and a number of small push-pull switches, knife switches, rheostats, etc., which operate low-voltage circuits which in turn energize and operate the large high-voltage oil switches, motor-controlled rheostats, throttles, governors, etc.

The low-voltage energy for operating the oil switches and remote-controlled equipment is generally obtained from operating busses supplied with low-voltage D. C. from a small D. C. generator.

Large storage batteries are also included in many power plants for supplying energy for the operating busses, exciter busses, emergency lighting equipment, etc., in case of trouble with the D. C. generators or plant circuits.

325. POWER PLANT RULES

In all large plants there are rigid operating rules and safety rules to be followed in order to protect expensive equipment, to protect operators, and to provide satisfactory and uninterrupted service to customers.

These rules vary somewhat according to the type of plant and the policies of the power company or owners. The majority of the more important rules have been covered in one or another of the preceding sections of this Reference Set; and careful application of your knowledge of the operation and care of electrical equipment, and good common sense combined with a desire to learn and co-operate with any special rules which may be maintained by any power company for whom you may be employed, will be of greatest importance to your success in this field.

Power plant operation is one of the most fascinating and interesting branches of electrical work and offers splendid opportunities to the man with thorough practical training who will perform his operating duties thoughtfully, cautiously, and intelligently, and who is willing to study conscientiously all phases of plant operation and companies' policies in order to obtain promotion. By following this policy you can reach positions of excellent pay and considerable responsibility in this field.

ELECTRICAL POWER TRANSMISSION AND DISTRIBUTION

Electrical power transmission and distribution provide a very great field of opportunity for trained electrical men in one of the most interesting and profitable branches of work in the electrical field.

We have already learned that one of the principal advantages of A. C. electricity is that it can be more economically transmitted over long distances than any other form of power can.

Many thousands of miles of high-voltage transmission lines span this country today, and silently and efficiently carry thousands of horse power of electrical energy from large steam and water-power generating plants to the various towns and industrial plants where it is used.

Many recently installed lines are supplying low cost electrical energy to small towns and communities which formerly were entirely without electricity or which had only a limited supply at almost prohibitive cost to the users.

Fig. 322 shows a high-voltage transmission line running across the country on steel towers. One three-phase circuit is already in operation on this line and space for another circuit is provided on the opposite side of the same towers.

The construction of electrical transmission lines has progressed even beyond the towns and larger load centers to a point where hundreds of thousands of farms are now connected to electrical lines and supplied with the great conveniences and economical benefits of electricity.

Economical transmission of electrical power has played a very large part in the industrial progress and general prosperity of this country and Canada, as well as many others of the more progressive countries in the world today.

It is difficult to find in this country a town of any size that is not supplied with electricity or even to find a rural district of very large area in which some of the farms are not already supplied with electricity.

Electrification is rapidly progressing throughout all parts of the country and the trained man who has a good knowledge of power transmission and distribution can find numerous opportunities for

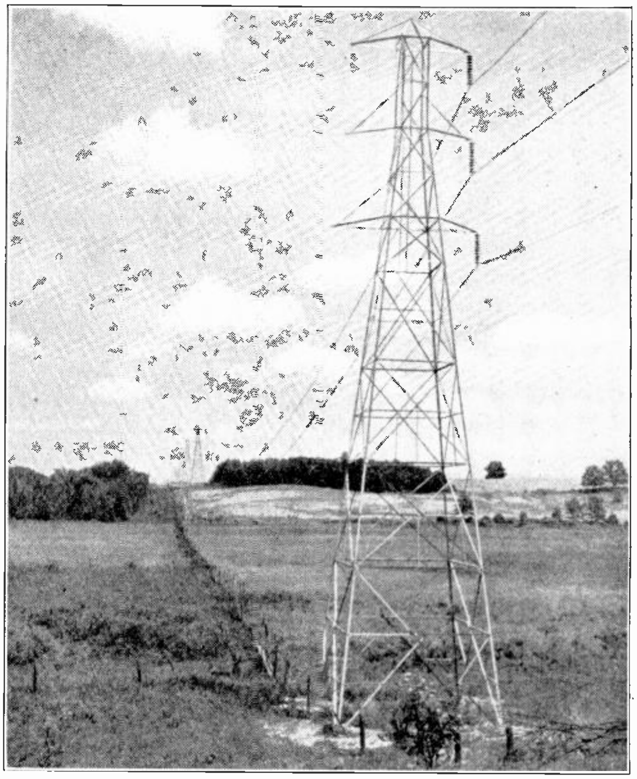

Fig. 322. Modern high-voltage transmission line carrying thousands of horsepower silently and efficiently across the country on small copper conductors.

interesting and profitable work with power companies who are constantly building new lines and extending their present ones. There is also a tremendous field of opportunity for trained men to go into various rural districts and promote farm electrification.

326. TRANSMISSION VOLTAGES AND SYSTEM LAYOUT

The electrical power generated in central stations is generally transmitted at high voltages to substations, from which it is distributed at lower voltage to the customers.

Large towns may have a number of substations located in various sections of the city, and small towns and large factories may each have their individual substations.

Fig. 303 showed a sketch of a number of substations in one town and fed by a central generating station, and Fig. 322-A shows a sketch of a power plant located at a river and feeding power over three transmission lines and a branch, to substations in a number of small towns.

Large power plants generate most of their power at voltages ranging from 2300 to 13,200 volts, or more. These voltages are high enough for economical transmission and distribution over distances from 3 to 15 miles and can be reduced to the voltage used for light and power by means of transformers at the substations or customer's premises.

Where power is to be transmitted greater distances the voltage is stepped up by transformers at the power plant to values ranging from 22,000 to 220,000 volts, according to the distances the power is to be transmitted.

Practically all transmission lines in this country are 3-phase and most of them are 60 cycle, although some still operate in 25 cycle energy.

A number of large central stations as well as many of the smaller power plants are commonly tied together into one vast super-power system or network, greatly improving the operating efficiency of many of the plants and also improving the dependability of service to the customers.

Connecting a number of plants together in this manner makes it unnecessary to carry so much reserve equipment at each plant for peak loads and enables all of them to operate at nearer full-load capacity. The peak loads on various plants often come at different periods of the day and are distributed over all the stations connected in such a network.

These interconnections also provide a much greater total generating capacity on the system and decrease the liability of service interruption in case of failure of any one generator or plant.

Fig. 323 shows an excellent view of another high-voltage transmission line running through a mountainous region in one of the southern states.

327. UNDERGROUND TRANSMISSION

There are two general methods of electrical power transmission, namely the underground and overhead systems. The overhead system costs a great deal less per mile and is therefore generally used for lines extending through the country.

Underground systems are used principally in large cities where it would be very undesirable to have a network of high-voltage wires overhead. One can readily see that running high-voltage power lines on poles, along with all the wires used for lighting, telephone, and telegraph service in large cities would not only create a bad appearance but

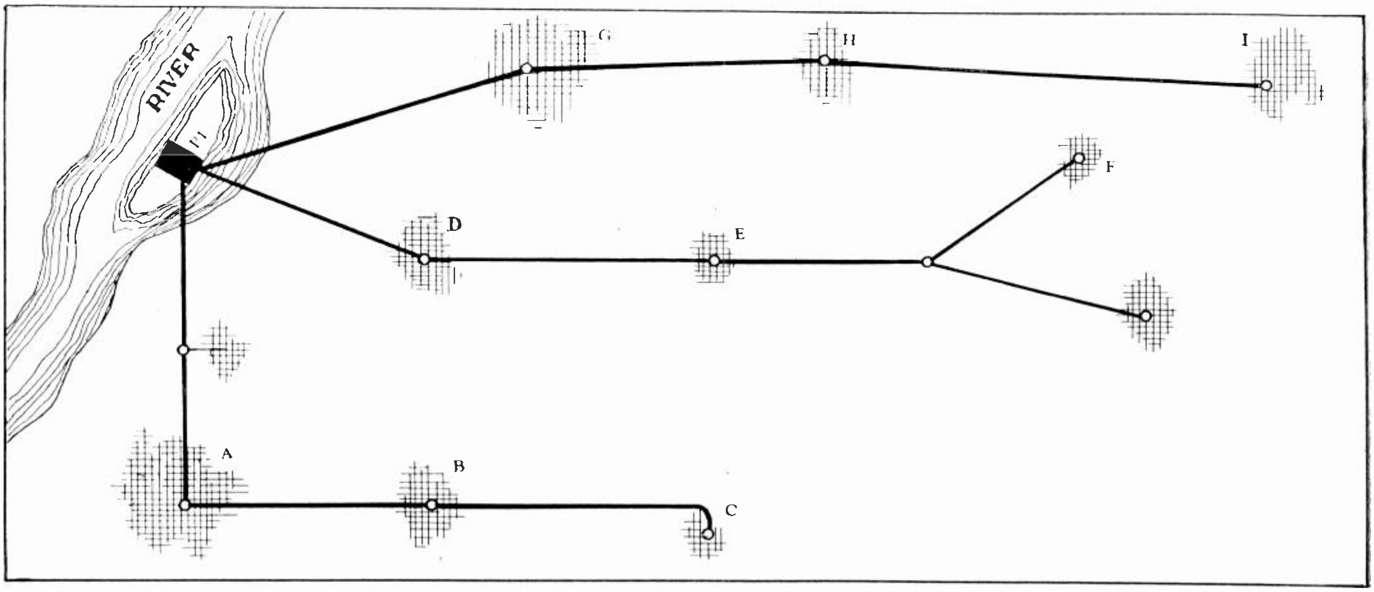

Fig. 322-A. This diagram shows the location of a central station power plant and the layout of a transmission system. The power plant is located at the river where fuel and condensing water are easily available and the transmission lines feed the generated energy to substations located in the various towns.

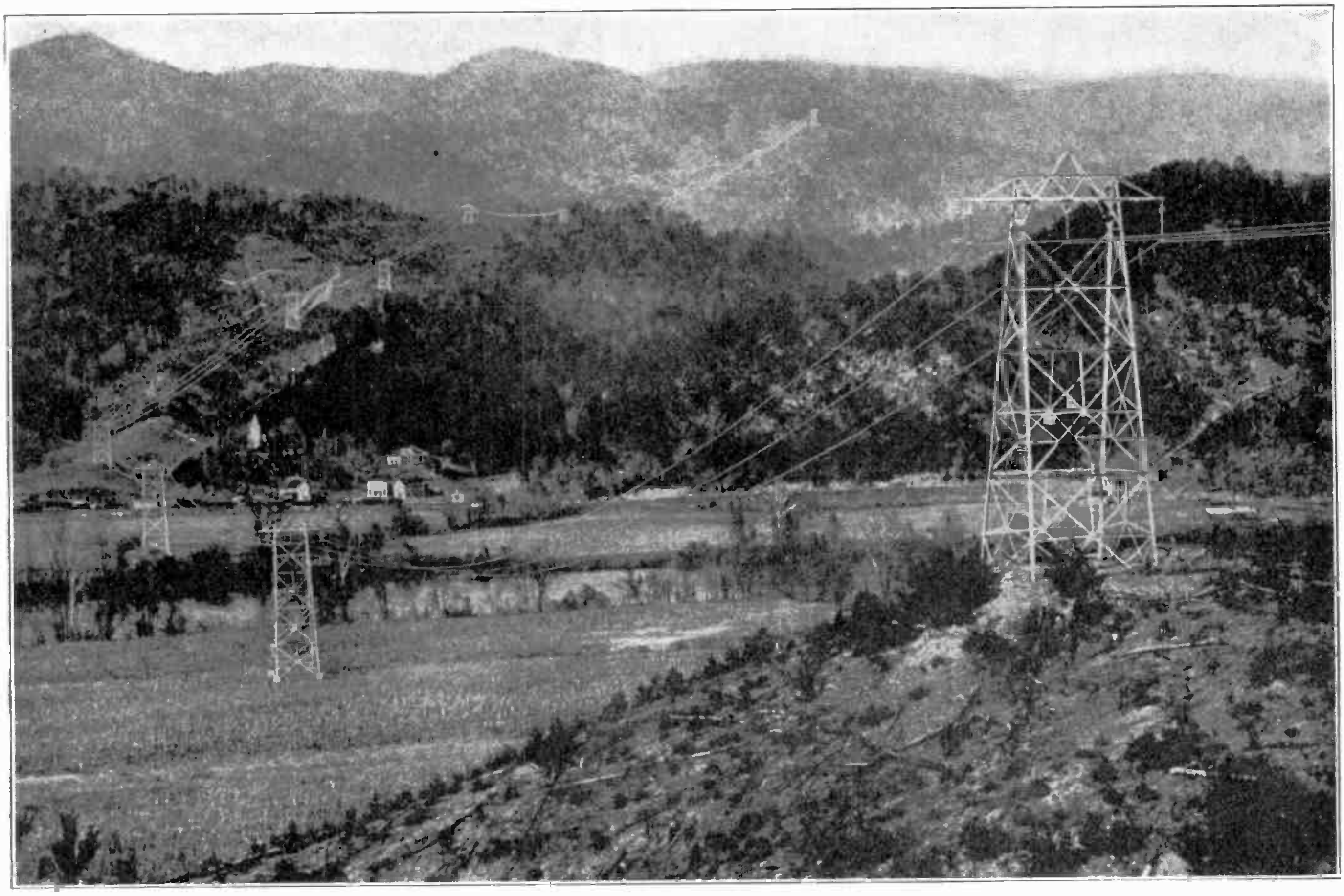

Fig. 323. This photo shows a modern high-tension line supported on sturdy steel towers through a mountainous section of country. Note the arrangement of conductors, insulators, and cross arms on the towers.

would also cause inconvenient obstruction and actually be dangerous.

For this reason in practically all large cities electrical power wires are run through underground conduits or tunnels. Underground conductors are generally run through **ducts** or conduits which are laid several feet below the street level and have outlets provided at small underground rooms or compartments located at intervals of several hundred feet apart.

Access can be had to these underground compartments by means of **manholes** provided in the streets and equipped with heavy, iron covers. Lengths of cable can be spliced together and branch runs attached in these manhole compartments, and in some cases small transformers or other equipment may also be located in them.

Underground ducts are commonly made of vitrified clay or tile, which is obtained in standard lengths and laid in a ditch or trench. The ends of the short lengths are cemented together to prevent dirt or water from entering at the joints and the tile is then covered over with dirt and pavement.

In some cases ducts made of concrete and special fibre are also used for underground work.

Ducts for underground wiring are laid with a small amount of slope toward the manholes, so that if any water leaks into the ducts it will drain to one end where it can be run off into a sewer or pumped out so that it doesn't ground the electrical conductors.

These ducts are provided with 2, 4, 6, 8, or more, separate openings or compartments, as shown in Fig. 324-A. On large important circuits just one cable is often run in each duct or compartment, while with smaller circuits at lower voltage the several conductors of the complete circuit may be run in one compartment.

328. PULLING IN UNDERGROUND CABLES

To get the wires and cables into an underground duct a fish tape or pilot line is first passed through the duct and then used to draw in the cables by pulling them in a section at a time from one manhole to the next.

In some cases the fish tape is pushed through the duct from one manhole to the next by use of joined sections of wooden rods which can be attached together one section at a time in the manhole compartments as the rod is pushed through the duct.

It is then taken apart and removed one section at a time from the next manhole opening, except in cases where it may be desired and possible to push it on through for several more runs.

In other cases a small cord is blown through the

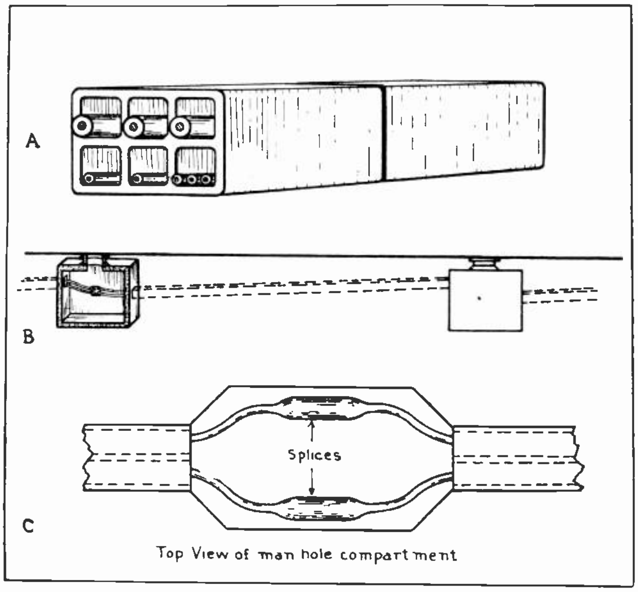

Fig. 324. "A" shows underground conductors run in tile ducts. "B". This sketch shows the arrangement of man holes and cable ducts underground. "C". Cables spread apart and supported in racks on the walls of man holes allow working room for making splices, tests, etc.

duct by compressed air and then used to pull in a heavier rope, which in turn is used to draw in the cables. The cable is usually supplied in large reels which are placed close to the manhole opening at which the end of the cable is to be started into the duct.

Proper guides or protection should be provided to prevent excessive friction and damage to the cable sheath or insulation where it rubs on the corners of the manhole.

Pulling in large underground conductors requires considerable power, and a hand or motor-operated winch is generally used for this purpose. Liberal application of powdered soapstone will tend to lubricate and greatly aid the passage of the conductors through the conduit. When the sections of conductor have been pulled into the ducts their ends can then be spliced at the manhole compartments.

329. TYPES OF UNDERGROUND CABLES

There are many different kinds of cable in use for underground work. Some of them have heavy insulation with a moisture-proof covering, and most of them also have a lead sheath over the surface of the insulation. Lead sheath cables are much more highly moisture-proof and less subject to mechanical injury to the insulation.

The thickness of the lead sheath ranges from about 1/32 of an inch on small conductors to well over ⅛ of an inch on larger cables. Some underground cables have only one conductor, while others have two or three conductors separately insulated but enclosed within the one lead sheath.

A section of each of these types of lead-covered cable is shown in Fig. 325.

Various types of insulation are used on underground cables, some of the most common being rubber, varnished cambric or empire cloth, oiled paper, and various insulating compounds.

Cables with a solid group of stranded conductors twisted into one and insulated with these materials, can be designed for voltages as high as 66,000 by applying the proper thickness of insulation between the conductor and lead sheath.

For quite a number of years it was thought that 66,000 volts was the highest practical voltage for underground cables, but within the last few years the General Electric Company of this country and the Parelli Company of Italy have each developed a special type of cable which is capable of withstanding pressures of 132,000 volts. Sections of this cable several miles long are in operation at 132,000 volts both in Chicago and in New York, and other installations are being planned.

In these cables the insulation consists of 23/32 of an inch of special paper between the conductor and the lead sheath. The copper conductor is of the stranded type, which is twisted or built up around an inner brass spiral which serves to provide a hollow opening throughout the conductor from one end to the other.

This opening allows the free circulation of insulating oil throughout the cable at all times, and this is one of the important factors of its successful operation at this very high voltage.

When this cable is installed in the ducts the ends are joined in special oil tanks located every few hundred feet apart. The air is then exhausted from the cable by vacuum pumps and insulating oil allowed to enter to fill all spaces not occupied by the conductor and insulation.

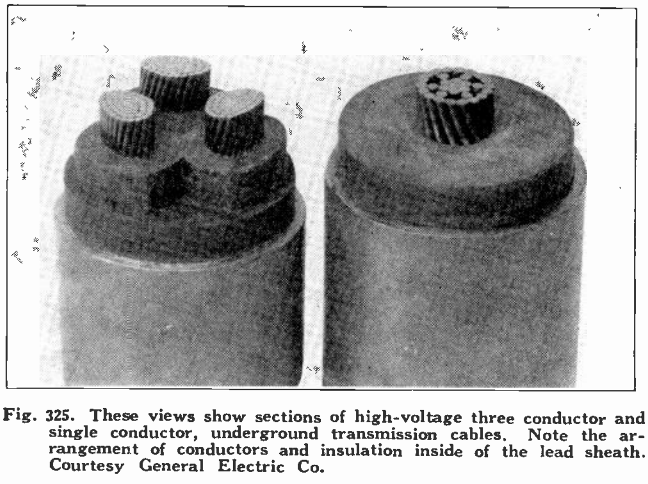

Fig. 325. These views show sections of high-voltage three conductor and single conductor, underground transmission cables. Note the arrangement of conductors and insulation inside of the lead sheath. Courtesy General Electric Co.

All cables are subject to a certain amount of expansion and contraction due to changes of temperature and load during operation. This expansion and contraction produces one of the most serious difficulties encountered in the operation of high-voltage cables.

In ordinary cables the expansion causes the forcing out insulating compound and possible bulges in the cable sheath and insulation. Then when the cable cools and contracts air pockets are formed at these points. These air pockets provide weak spots at which the insulation is much more likely to puncture or break down.

In the new high-voltage cable just described this condition is prevented by allowing the free circulation of oil throughout the cable's length. When the cable expands the oil is forced out of the cable and into the reservoirs. When the cable cools and contracts the oil is again drawn in. This prevents the formation of air pockets and also prevents the breathing in of any moisture as would occur if air were allowed to enter the cable.

330. CABLE HANDLING AND SPLICING

When installing any lead-covered cable great care should be exercised not to allow the sheath to become damaged in any way. The cables should not be bent in sharp curves or angles at any time during their handling, as this greatly weakens the dielectric strength of the insulation and is also likely to crack the lead sheath.

In making splices in underground cables the joint in the conductor must be carefully and thoroughly insulated with special tapes of rubber, paper, or varnished cloth, which is carefully and tightly lapped back over the insulation on the cable ends to provide insulation over the joint as good as that along the cable.

A large lead sheath which has been slipped over one end of the cable before making the splice is then drawn into place over the insulated joint and securely soldered to the lead sheath on the cable ends. The joint can then be boiled out by pouring hot compound through it, and finally filled with hot insulating compound and sealed to exclude all moisture.

Figs. 31 and 32 in Section One on Electrical Construction and Wiring showed several very good views of cable splices in the process of being made.

331. OVERHEAD TRANSMISSION LINES AND COMMON VOLTAGES

Overhead transmission lines as previously mentioned are much more extensively used for transmitting power over long distances across the country, because of their cost being much lower than underground construction. There are a number of different voltages in use on high-tension transmission lines today, but there is a general tendency at present to standardize on the more common and convenient of these voltages.

Newer installations of both transmission and distribution lines will generally be found to have one of these more or less standard or preferred voltages. This greatly reduces the variety and number of different voltage designs of transformers and electrical equipment used with the lines, and greatly increases the convenience and economy of interconnection between different lines.

Common voltages	Industrial Plant motor voltages	Generating voltages.	Transmission voltages.	Preferred voltages.
110	*			*
220	*			*
440	*			*
550	*			
2200 or 2300	*	*	*	*
4000			*	*
4400		*		
6600		*		
11000		*	*	
12000		*		
13200		*	*	*
22000		*	*	
33000		Developing	*	*
44000			*	
66000			*	*
88000			*	
110000			*	
132000			*	*
140000			*	
165000			*	
220000			*	*
330000			Future	

Fig. 326. The above table shows the more common voltages in present day use for lighting and power purposes and for electric power distribution and transmission.

Standardization of generators, transformers, lightning arresters, insulators, and line equipment means that more devices of one kind can be produced and thereby reduce their cost.

The table in Fig. 326 shows a number of the different voltages which are in common use, except the last one of 330,000 volts which is planned for future transmission line developments. The small stars in the columns following these voltages indicate the uses to which they are most commonly put, and those in the last column under "preferred voltages" indicate the voltages which are more generally used and are becoming standard.

Whenever you may be placed in a position to select new equipment or plan a transmission line installation, it will be well for you to select the equipment for one of these preferred voltages, unless existing equipment and conditions make it impractical. You should at least give one of these voltages considerable thought before selecting any other.

The method of calculating the proper voltage to use for a given transmission line will be covered in later articles in this section.

Overhead transmission lines consist primarily of the proper conductors to carry the current; insulators to support the conductors and give them the required insulation according to the voltage used; line supports, such as poles or steel towers; and the proper protection from lightning, overload, and short circuits.

Each of these important items will be considered separately.

332. CONDUCTORS

There are now in use for transmission lines several different types of conductors, the most common of which are copper, aluminum, and copper-clad steel. Each of these has its advantages for different applications.

Copper conductors are used on the great majority of lines because copper is an excellent conductor, is reasonably cheap, and is available in large quantities.

We know that silver is a slightly better conductor of electricity, but because of its very high cost it would be prohibitive for use as a transmission line conductor.

Copper is the next best conductor and it is therefore generally used, even though its cost is high enough to make it one of the major items of cost in the construction of a line.

333. HARD DRAWN COPPER CONDUCTORS

There are two forms of copper wire, namely hard drawn copper and annealed or soft copper. Hard drawn copper has approximately twice the tensile strength of annealed copper, and for this reason is most generally used on transmission lines, where considerable strength is required to support the long spans between poles and towers.

Hard drawn copper has a tensile strength of about 55,000 lbs. per square inch of conductor cross-sectional area.

Annealed copper has a conductivity within two or three per cent. of that of silver, while hard drawn copper has a conductivity just slightly less than annealed copper.

For lines of small capacity solid hard drawn copper conductors are commonly used, but on lines requiring wires larger than No. 2 or No. 4 B. & S. gauge stranded copper conductors are generally used. The stranded conductors are more flexible and provide better heat radiation.

In handling and installing hard drawn copper wire great care must be exercised not to make any deep scratches or nicks in the wire, or it is likely to break off at these points.

Joints or splices in hard drawn solid copper are frequently made by means of a splicing sleeve or short piece of twin copper tubing, known as a McIntyre sleeve. The conductor ends are placed in this short section of tubing from opposite ends and both the conductors and the tubes are then twisted around each other, resulting in a joint which is secure both mechanically and electrically.

These joints do not require soldering and thereby avoid the heat of the soldering operation, which would tend to soften the hard drawn copper and reduce its strength.

One of the advantages of copper conductors over aluminum is that they can be readily soldered when necessary and this is often a great advantage in localities where the conductors are subjected to corrosive gases or salt mist.

Special splicing devices in the form of short pieces of heavy copper tubing are often used, and are gripped securely to the ends of the conductors by means of special threaded wedge grips or by squeezing under hydraulic pressure.

PROPERTIES OF BARE AND INSULATED STRANDED COPPER WIRE

American Wire Gauge (B & S)	Area		Number of Wires in Strand	Diameter in Inches			Weight in Pounds per 1000 Feet			Resistance Ohms per 1000 Feet at 20°C (68° Fahr.) Standard Annealed	Area in Square Milli-meters	American Wire Gauge (B & S
	Circular Mils	Square Inches		Bare	Over Insulation		Bare	Insulated				
					2-Braid	3-Braid		2-Braid	3-Braid			
	2,000,000	1.5708	91	1.630	1.875	2.000	6205	6690	7008	.005,289	1013.5	
	1,750,000	1.3744	91	1.526	1.781	1.906	5429	5894	6193	.006,045	886.8	
	1,500,000	1.1781	91	1.412	1.656	1.781	4654	5098	5380	.007,052	760.1	
	1,250,000	.9817	91	1.289	1.531	1.656	3878	4264	4508	.008,463	633.4	
	1,000,000	.7854	61	1.152	1.406	1.531	3100	3456	3674	.010,578	506.7	
	900,000	.7069	61	1.094	1.312	1.437	2790	3127	3332	.011,753	456.1	
	800,000	.6283	61	1.031	1.250	1.375	2480	2799	2992	.013,223	405.4	
	750,000	.5891	61	.998	1.218	1.343	2325	2635	2822	.014,104	380.1	
	700,000	.5498	61	.964	1.187	1.312	2170	2471	2650	.015,112	354.7	
	600,000	.4712	61	.893	1.109	1.234	1860	2093	2235	.017,631	304.0	
	500,000	.3927	37	.813	1.000	1.109	1548	1765	1894	.021,157	253.4	
	450,000	.3534	37	.772	.937	1.062	1303	1601	1724	.023,508	228.0	
	400,000	.3142	37	.728	.906	1.031	1239	1436	1553	.026,447	202.7	
	350,000	.2749	37	.681	.843	.968	1083	1248	1345	.030,225	177.4	
	300,000	.2356	19	.629	.796	.921	926.0	1083	1174	.035,262	152.0	
	250,000	.1963	19	.574	.750	.875	771.7	907	985	.042,315	126.7	
0000	211,600	.1662	19	.528	.687	.812	653.1	745	800	.049,99	107.2	0000
000	167,800	.1318	19	.470	.671	.734	512.1	604	653	.063,04	85.04	000
00	133,100	.1045	7	.413	.625	.687	407.0	482	522	.079,49	67.42	00
0	105,500	.08289	7	.368	.578	.640	322.4	388	424	.100,24	53.48	0
1	83,690	.06573	7	.328	.531	.593	255.5	303	328	.1264	42.41	1
2	66,370	.05213	7	.292	.468	.531	202.5	246	270	.1594	33.63	2
3	52,640	.04134	7	.260	.421	.468	160.6	190	206	.2009	26.67	3
4	41,740	.03278	7	.232	.390	.437	127.4	155	170	.2535	21.15	4

For weight or resistance per mile multiply values per 1000 feet by 5.28.
Weight and resistance of actual strand may vary from calculated quantities in table.
Due to twist in strand weight and resistance increase about 2% over solid wire.

Fig. 327. This table gives a lot of valuable data on stranded copper wire for transmission line conductors and will be very convenient for reference in making calculations for any transmission line.

The table in Fig. *327* gives some very convenient data on large stranded copper conductors, and Fig. *327-A* gives additional comparative data on solid and stranded conductors. These tables will be very convenient for reference on transmission line construction problems.

334. ALUMINUM CONDUCTORS

Aluminum conductors are also quite extensively used for overhead transmission lines. Aluminum has less than ½ the tensile strength of copper and for this reason aluminum line conductors are generally made with a steel core or wire in their center to provide the added strength necessary for supporting the long spans. Such conductors are usually referred to as A.C.S.R., meaning "aluminum cable—steel reinforced".

Very few all aluminum conductors are used, because of their low tensile strength and due to the fact that a very small amount of swaying will cause the cable to break at points where it is fastened to insulators.

An aluminum conductor of a given size weighs only about ⅓ as much as a copper conductor of the

CONDUCTOR DATA—COPPER (H. D.)

A. W. Gage	Area Cir. Mils	OUTSIDE DIAM.—INCHES			STRENGTH—LBS.	
		Solid Bare	Cable Bare	Cable T.B.W.	Solid Bare	Cable Bare
	2000000		1.630	2.125		
	1750000		1.526	2.000		
	1500000		1.412	1.875		
	1250000		1.289	1.750		
	1000000		1.152	1.656		
	950000		1.123			
	900000		1.094	1.609		
	850000		1.063			
	800000		1.031	1.563		
	750000		.998			
	700000		.964	1.469		
	650000		.929			
	600000		.893	1.328		
	550000		.853			
	500000		.813	1.108		22500
	450000		.772	1.070		20500
	400000		.728	1.020		18300
	350000		.678	.978		15600
	300000		.628	.930		13500
	250000		.573	.862		11400
0000	211600	460	.527	.785	8100	9100
000	167772	.410	.470	728	6700	7400
00	133079	.365	.413	662	5500	5900
0	105625	.325	.368	605	4500	4700
1	83694	.289	.328	.518	3600	3800
2	66358	.258	.291	.440	3000	3000
3	52624	.229	.260	.408	2400	2400
4	41738	.204	.231	.379	2000	1900
5	33088	.182	.206	.351	1590	1500
6	26244	.162	.183	.327	1300	1200

Fig. 327-A. This table gives convenient data on hard drawn copper conductors of both the solid and stranded types and also on insulated cables.

same size, and the aluminum conductor has about 62% of the conductivity of the copper conductor.

Considering both of these factors, we find that of two lines of equal current capacity, one being made of copper and one of aluminum, the aluminum conductor will have a weight of only 48% of that of the copper conductor.

For this reason steel-core aluminum conductors are frequently used for long spans where transmission lines are required to cross rivers, lakes, or valleys in which it is difficult to place towers.

Aluminum also has the added advantage that sleet ice will not cling to its surface as it does to a copper conductor. This greatly reduces the weight on aluminum conductors and the strain on insulators and towers during sleet storms.

One of the disadvantages of aluminum conductors is that it is very difficult to solder. For this reason most of the splices or joints in these conductors are made with special clamps or mechanical grip devices.

One method of splicing these conductors is to place their ends in an aluminum sleeve, which is then subjected to a pressure of about 100 tons by means of a hydraulic jack. This great pressure causes the aluminum of the conductor and that of the splicing sleeve to actually flow together, thereby making a solid joint.

The table in Fig. 328 gives a comparison of a number of the important characteristics of copper, aluminum, and steel conductors.

CONDUCTOR DATA—A. C. S. R. BARE

(Aluminum Cable, Steel Reinforced)

A C.S.R. Area in C.M. or A.W.G.	Copper Equivalent C.M. or A.W G.	Diam. Ins	USUAL STRANDS			Elas. Limit Lbs.	Ult. Strength Lbs.
			Al.	St.	Diam.		
1590000	1000000	1 544	54	7	1716	38500	55900
1510500	950000	1 506	54	7	1673	36600	53200
1431000	900000	1 465	54	7	.1628	34700	50300
1351500	850000	1.424	54	7	.1582	32700	47400
1272000	800000	1.382	54	7	.1535	30800	44600
1192500	750000	1.337	54	7	.1486	28800	41900
1113000	700000	1.292	54	7	.1436	26900	39000
1033500	650000	1 246	54	7	1384	25000	36300
954000	600000	1 196	54	7	1329	23100	33500
900000	566000	1 162	54	7	1291	21800	31600
795000	500000	1 093	54	7	1214	19250	27950
715500	450000	1 036	54	7	.1151	17360	25200
636000	400000	977	54	7	1085	15400	22300
605000	380500	953	54	7	.1059	14675	21270
500000	314500	904	30	7	1291	17400	24080
477000	300000	883	30	7	1261	16600	22600
397500	250000	806	30	7	.1151	13800	19170
336400	0000	741	30	7	.1059	11715	16200
266800	000	633	6	 7	.2108 .0705	6470	9385
211600	00	564	6	1	.1880	5940	8435
167805	0	501	6	1	.1670	4690	6660
133079	1	447	6	1	.1490	3730	5300
105534	2	.398	6	1	.1327	2960	4200
83694	3	.355	6	1	.1182	2355	3340
66373	4	.316	6	1	.1052	1860	2660
52634	5	.281	6	1	.0938	1480	2100
41742	6	.250	6	1	0834	1170	1665

Fig. 327-B. Convenient data on sizes, number of strands, and strength of steel cored aluminum cable. Refer to these tables frequently when working the transmission line problems on the following pages, and also for data to simplify your problems in the field.

Fig. 329 shows another table which gives dimensions, resistance, weight, and other characteristics of aluminum conductors of different sizes. Observe these tables carefully and note the data given, and then remember where to refer to this information on any future line problems which you may have.

335. INSULATORS

Characteristics	Annealed Copper	Hard Drawn Copper	Aluminum	Steel
Conductivity in per cent	100	98	62	12.2
Tensile Strength in lbs. per sq in.	34000	55000	26000	65000
Expansion Coefficient per deg. F.	.0000096	.0000096	.0000128	.0000064
Weight in lbs. per cu ft.	555	558	167	490
Weight in lbs. per cu. in.	.321	.323	.0967	.284

Fig. 328. Comparative data on conductivity, strength, weight, and expansion of copper and aluminum conductors.

The conductors of low-voltage overhead distribution lines within city limits are often covered with weather-proof insulation, while the conductors of high-voltage transmission lines outside of the city limits are practically always bare.

Whether these conductors are insulated or not, they must be supported on special insulators to keep them permanently and well insulated from the poles or towers on which they are mounted.

The size and shape of these insulators depends upon the voltage used and they must always be large enough to prevent a flashover of the high-voltage energy from the conductor to wet poles or steel towers which are grounded.

Transmission line insulators are commonly made of porcelain or glass which is molded into the proper shapes and sizes.

Pyrex glass has become quite commonly used in the last few years, particularly for insulators of the smaller sizes. This glass possesses the advantage of being transparent so that any small defects can easily be noted, but it has the disadvantage of being easily broken or shattered if bumped against any hard object.

Porcelain is somewhat more rugged and a light bump will usually only chip the insulator instead of shattering it as is more likely to occur with the glass.

For these reasons porcelain is by far the more commonly used for line insulators. Porcelain is made chiefly from non-metallic rock known as feldspar. and silica. Sometimes these materials after being finely ground are mixed with other forms of clay and the entire mass is then molded into the proper shapes and baked or fired in a kiln.

After this first baking or firing the insulators are given a coat of glazing material which is evenly distributed over their surfaces. They are then replaced in the kilns and again heated to a temperature which melts the glazing material, causing it to flow evenly over the surface and unite with the porcelain.

This glazing material forms a hard, glassy surface on the outside of the insulators and prevents moisture, dust, and dirt from entering the pores of the porcelain. The glazing greatly improves the dielectric strength of the insulator and increases its life under outdoor weather conditions.

ALUMINUM CABLE STEEL REINFORCED

(A.C.S.R.)

A.C.S.R.			COPPER EQUIVALENT		USUAL STRANDING (INCHES)		ELASTIC LIMIT, LBS.	ULTIMATE STR'TH LBS.	OHMS PER 1000 FEET (61%)	DIAM. INS.	WEIGHT—POUNDS					
B. & S. GAGE NO. (A.W.G.)	ALUMINUM AREA										PER 1000 FEET			PER MILE		
	CIRC'LAR MILS.	SQUARE INCHES	C. M. OR NO.	SQUARE INCHES	ALUMINUM	STEEL					TOTAL	AL.	STEEL	TOTAL	AL.	STEEL
....	900000	.7060	566000	.4442	54 x.1291	7 x.1291	21800	31600	.0193	1.162	1158.0	844.0	314.0	6120	4462	1658
......	795000	.6244	500000	.3927	54 x.1214	7 x.1214	19250	27950	.0217	1.093	1024.0	747.0	277.0	5407	3944	1463
....	715500	.5620	450000	.3532	54 x.1151	7 x.1151	17360	25200	.0241	1.036	920.0	671.0	249.0	4857	3542	1315
....	605000	.4750	380500	.2987	54 x.1059	7 x.1059	14675	21270	.0286	.953	779.0	568.0	211.0	4113	2999	1114
....	500000	.3927	314500	.2468	30 x.1291	7 x.1291	17400	24080	.0347	.904	783.0	469.0	314.0	4135	2477	1658
....	397500	.3122	250000	.1962	30 x.1151	7 x.1151	13250	19170	.0435	.806	622.0	373.0	249.0	3284	1969	1315
....	336400	.2642	No. 4/0	.1662	30 x.1059	7 x.1059	11715	16200	.0515	.741	527.0	316.0	211.0	2783	1669	1114
....	266800	.2094	No. 3/0	.1318	6 x.2108	7 x.0705	6470	9385	.0648	.633	343.0	250.0	93.0	1811	1319	492
No. 4/0	211600	.1662	No. 2/0	.1045	6 x.1880	1 x.1880	5940	8435	.0816	.564	295.0	199.0	96.0	1556	1052	504
No. 3/0	167805	.1318	No. 1/0	.0829	6 x.1670	1 x.1670	4690	6660	.1026	.501	232.5	157.0	75.5	1227	830	397
No. 2/0	133079	.1045	No. 1	.0657	6 x.1490	1 x.1490	3730	5300	.1294	.447	185.0	125.0	60.0	977	660	317
No. 1/0	105534	.0829	No. 2	.0521	6 x.1327	1 x.1327	2960	4200	.1639	.398	147.0	99.5	47.5	776	525	251
No. 1	83694	.0657	No. 3	.0413	6 x.1182	1 x.1182	2355	3340	.2070	.355	117.0	79.0	38.0	617	417	200
No. 2	66373	.0521	No. 4	.0328	6 x.1052	1 x.1052	1860	2660	.2610	.316	92.4	62.5	29.9	488	330	158
No. 3	52634	.0413	No. 5	.0260	6 x.0938	1 x.0938	1480	2100	.3291	.281	73.4	49.7	23.7	387	262	125
No. 4	41742	.0328	No. 6	.0206	6 x.0834	1 x.0834	1170	1665	.4150	.250	58.0	39.3	18.7	306	207	99
No. 5	33102	.0260	No. 7	.0163	6 x.0743	1 x.0743	930	1315	.5217	.223	46.0	31.0	15.0	243	164	79
No. 6	26250	.0206	No. 8	.0130	6 x.0661	1 x.0661	735	1045	.6577	.198	36.4	24.6	11.8	192	130	62
No. 7	20816	.0163	No. 9	.0103	6 x.0586	1 x.0586	575	820	.8293	.176	28.5	19.3	9.2	151	102	49
No. 8	16509	.0130	No. 10	.0082	6 x.0525	1 x.0525	465	660	1.0450	.158	23.0	15.6	7.4	121	82	39

Fig. 329. This table also gives very valuable and convenient data on size, number of strands, strength, resistance, and weight of steel cored aluminum cable. You will also note in the third and fourth columns the comparative sizes of copper conductor which would have the same carrying capacity in amperes of any of the aluminum conductors.

Great care should be used in handling porcelain insulators not to crack or chip the protective glazing on the surface.

Line insulators are made in several different forms, the most common of which are the **Pin** type, **Suspension** type, **Strain** type, **Pedestal** type, and **Bushing** type.

336. PIN TYPE INSULATORS

Fig. 330 shows two common types of pin insulators designed for different voltages which are marked above them in the figure. This figure shows part of each insulator cut away to provide a sectional view which clearly shows the shape and construction of each unit.

You will note that the 13,000-volt insulator on the left has several ribs and grooves on its under side, to provide surfaces which will be free from dirt and water even during storms and thereby increase the **creepage** distance from the line conductor to the pin.

The high-voltage insulator on the right is built up of three separate sections securely cemented together. This **cement has very high** mechanical strength and forms a secure bond between the surfaces of the insulator sections.

You will note that **the center** section is larger than the bottom one and the top one still larger than either of the others, thus creating an overhanging or umbrella effect which provides the clean, dry undersurface in the grooves which are protected from dirt and moisture.

These outer flanges on insulators of this type are commonly called "skirts" and make it much more difficult for the line voltage to flash over the surface of the insulator.

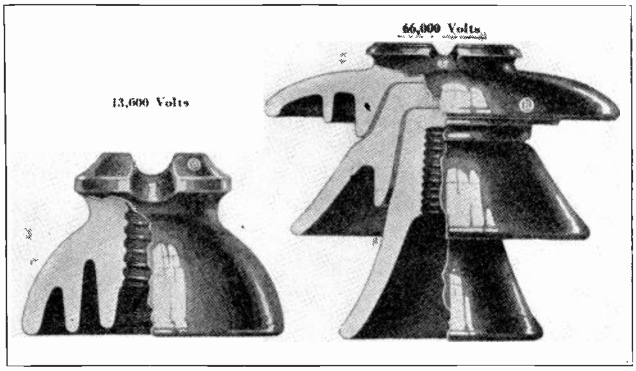

Fig. 330. The above photo clearly shows the shape and construction of both small and large pin type insulators of the type used on high-voltage lines. Courtesy of Ohio Brass Co.

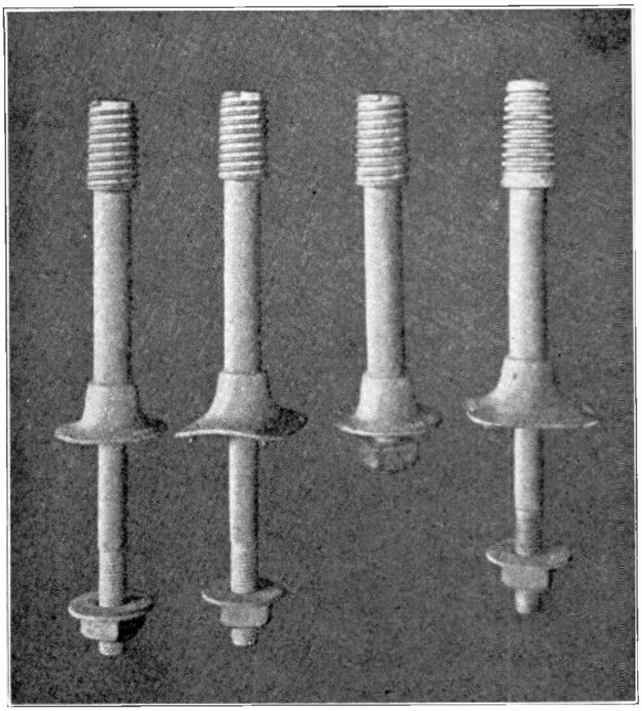

Fig. 331. Several styles of insulator pins used for attaching pin type insulators to wood and steel cross arms. Courtesy of Ohio Brass Company.

Pin insulators of this type are provided with grooves on the top or cap section, in which the line conductor is laid and then tied in place with a tie wire which is wrapped around the groove in the sides of the knob on the insulator cap.

Pin type insulators are provided with threaded holes on their under sides or in their lower sections that enable them to be screwed onto wood or iron pins by which they are attached to the **cross arms** on the poles or towers.

Fig. 331 shows several different styles of metal insulator pins. The one on the left has a flat base for use on wood cross arms with flat tops. The next pin to the right has a curved base for use on wood cross arms with curved or "roofed" tops. The pin with the short bolt is for use on metal cross arms. These three pins all have lead tips to enable them to screw snugly into the porcelain insulators without splitting them. The last pin on the right has a separable lead thimble.

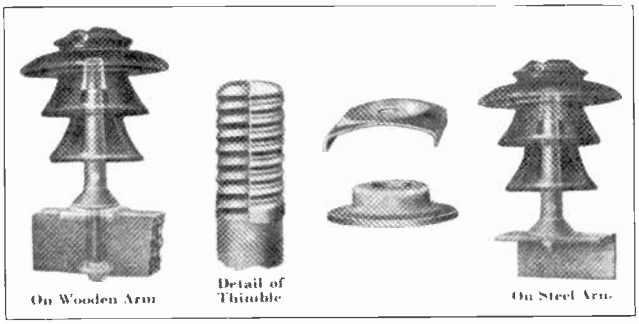

Fig. 332. Above are shown the methods of mounting insulators on pins and attaching the pins to wood and metal cross arms, and also the soft lead thimble which enables the insulator to be securely tightened on the pin without damaging the threads in the porcelain. Courtesy of Ohio Brass Company.

Fig. 332 shows the method of mounting pin type insulators on wood or metal cross arms, and also shows several of the pin fittings.

Pin type insulators are extensively used on lines with voltages up to 50,000, and occasionally on lines of 80,000 volts or more.

Fig. 333 shows a three-phase, 33,000-volt transmission line on pin type insulators and wood poles.

337. FASTENING CONDUCTORS TO PIN TYPE INSULATORS

Line conductors are generally laid in the grooves on the caps of pin type insulators as long as the direction of the line carries them straight across the top of the insulators. When lines make a turn or bend at certain poles, the conductors are generally drawn into the groove on the side of the cap, and on the outer side of the line curve. Both of these methods are clearly shown in Fig. 334; top ties being shown in views 4, 5, 6, 7 and 9, and side ties in views 1, 2, 3, and 8.

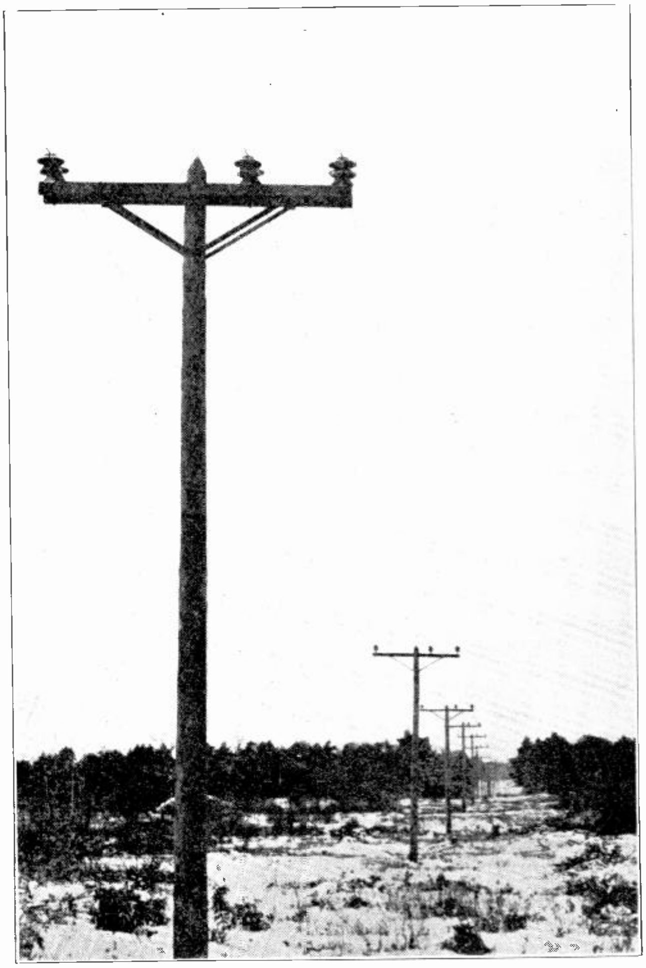

Fig. 333. Photo of a very neat pole type transmission line carrying the conductors of a three-phase line on pin type insulators.

On poles where the line curves, two insulators per conductor are often used as shown in views 2,

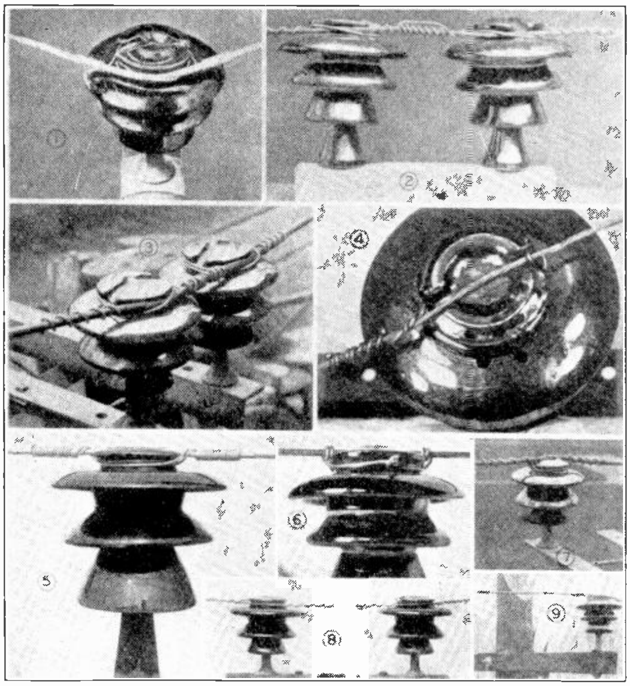

Fig. 334. Above are shown a number of common types of line ties used for attaching conductors of transmission and distribution lines to pin type insulators. Examine each type very carefully as you read the accompanying descriptions and also compare them with the sketches in Fig. 335. Courtesy Lapp Insulator Company, Inc.

3, and 8 in Fig. 334. This is done because of the increased side strain placed on the insulators and pins at such points.

Line conductors are attached to pin type insulators by means of **tie wires** of soft drawn copper or aluminum. The tie wires should be of the same material as the conductor, and are usually a little smaller than the line conductors. Insulated tie wires are generally used for fastening insulated conductors.

Fig. 335 shows a number of types of ties in common use, and also the names of each. These sketches show top views of the line conductor and tie wires, the loops being shown in the same position as they would actually be in the groove around the side of the insulator cap. Careful observation of each of these ties will clearly show the manner in which they are made.

The **"cross top"** and Western Union ties shown in this figure are very good ones and very commonly used. The looped Western Union ties are also frequently used.

In somes cases, before the tie is made the conductor is first wrapped with an armor of flat, metal ribbon at the point where it rests on the insulator cap. This prevents scratching or wear of the cable if it rubs slightly on the insulator.

Tie wires will vary from three feet to twenty-five feet in length according to the size of the insulators and the type of tie that is used.

Fig. 334 shows several photographs taken in the field, of actual line ties on pin type insulators. View No. 1 shows an armored, looped Western Union tie on an insulator at which the line makes a bend. View No. 2 is a looped Western Union tie which is not very neatly done, as you will note from the general looseness of the turns and the down-hanging pig tail at the right. No. 3 shows a looped Western Union tie which is well done. No. 4 is a poorly done "Mongrel" tie and has very little mechanical security. No. 5 shows a very well made armored "stirrup" two-piece tie. No. 6 is a special tie of rather poor design and very carelessly made. Note the projecting or "flying" pin-tail. No. 7 shows a well made cross-top tie, and No. 8 shows a carelessly made looped Western Union tie. No. 9 shows a poorly made cross top tie.

In making line ties pig tails or sharp ends which are allowed to project down are very bad and reduce the flash over voltage of the insulator from 5 to 20%. If planned to save the conductor in case of arc-overs, they are quite useless unless carefully designed and uniformly installed.

In general it is better practice to turn all pig tails up or "serve" them tightly around the conductor. All tie wires should be tightly "served" around the insulator because loose tie wires may cause considerable radio interference, by very poor contact with the insulator surface and sparking which occurs when a very small amount of high-voltage energy leaks off to a wet or dirty insulator surface.

Fig. 336 shows a special design of pin type insulator for use on lines which are subject to salt fog or mist, and bad accumulations of dirt or dust which tend to make the insulator surface more or less conductive.

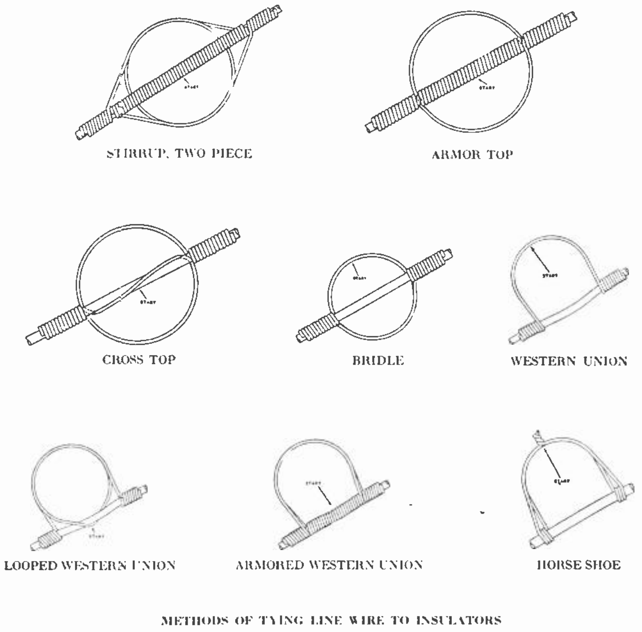

Fig. 335. The above sketches show the methods of making some of the most common types of line ties. Note carefully how the tie wires are wrapped around the insulator cap and around the conductor. Courtesy Lapp Insulator Company, Inc.

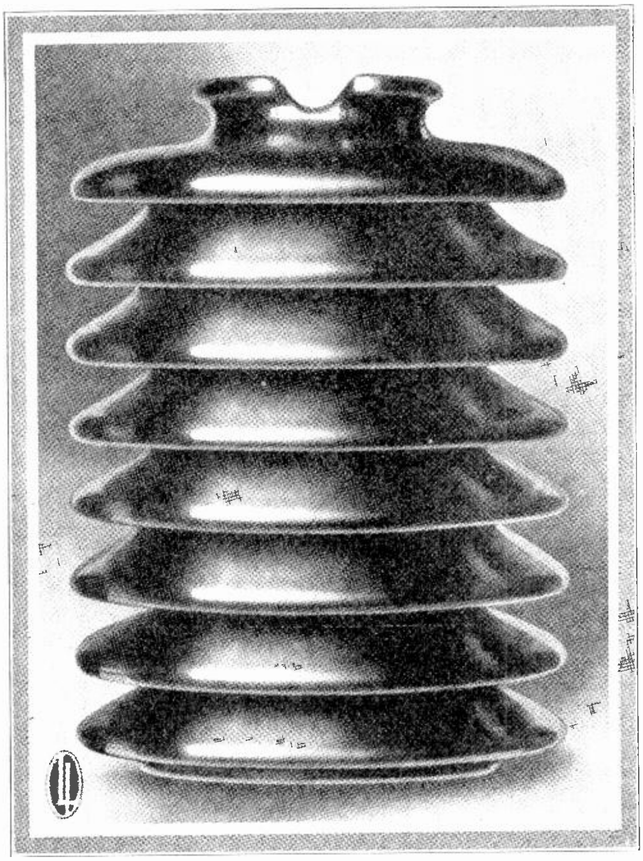

Fig. 336. Large special fog type pin insulator having a number of extra skirts to prevent flashovers in districts subject to heavy salt fogs, mist, dirt, etc. Courtesy Lapp Insulator Company, Inc.

338. PILLAR TYPE INSULATORS

Pin type insulators are often fitted with metal caps and special metal pins having bolt holes in them so the insulators can be mounted one above the other as shown in Fig. 337. These are called **pillar** type or **pedestal** type insulators and are used for supporting high-voltage busses on the switching stations and in places where there is very little side strain placed on the insulators.

Insulators of this type can be built up with the proper number of units to provide the necessary insulation for very high voltages.

Pillar type insulators will not stand excessive side strains, however, and are therefore not used on transmission lines where the long conductor spans are subject to wind stresses and the strain of unequal sag on the spans.

339. SUSPENSION TYPE INSULATORS

For insulating conductors of transmission lines using very high voltages suspension type insulators are more commonly used. These insulators obtain their name from the manner in which they are suspended in strings from the cross arms.

Fig. 338 shows two pairs of suspension insulator units which use different methods of attaching the units together in the strings. Those on the left are fastened together with short, heavy pins which project through the bottom eye of one insulator and the top eyes of the other. The units on the right are fastened together by means of a large headed metal pin on the under side of the top unit, which fits into a properly shaped cavity on the top cap of the unit below.

Each insulator consists of a single piece of porcelain with grooved under sides and a bulge or crown projecting upward from its center. A malleable iron cap is securely cemented to the top of the insulator and a bolt or plug which is equipped with the proper eyes or enlarged head is securely cemented into the center cavity on the under side of the insulator.

Fig. 339 is a sketch showing a sectional view of a common type of suspension insulator, illustrating the manner in which the cap and pin are cemented to the top and bottom of the porcelain and completely separated from each other by the porcelain.

Fig. 339 also gives the dimensions both in inches and millimeters of this particular insulator shown

As porcelain has a much higher dielectric strength than air, it is not necessary to have the metal pin and cap of the insulator separated by a thickness of porcelain as great as the flash-over distance around the extended flange of the insulator.

Suspension insulator units are usually made to withstand voltages of from 10,000 to 30,000 volts

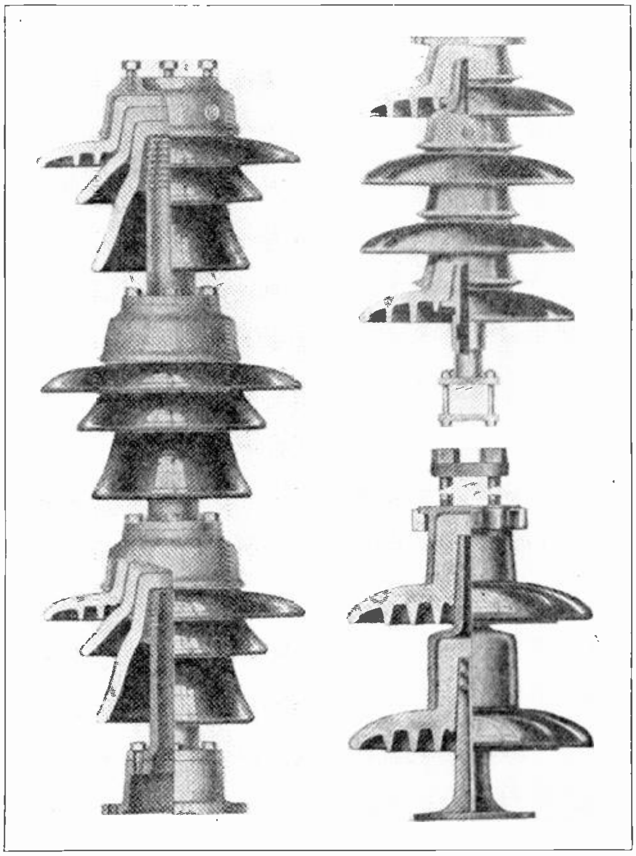

Fig. 337. Three styles of pedestal type insulators which can be built up in rigid pedestal or pillar form to support high-voltage bus bars and switching equipment.

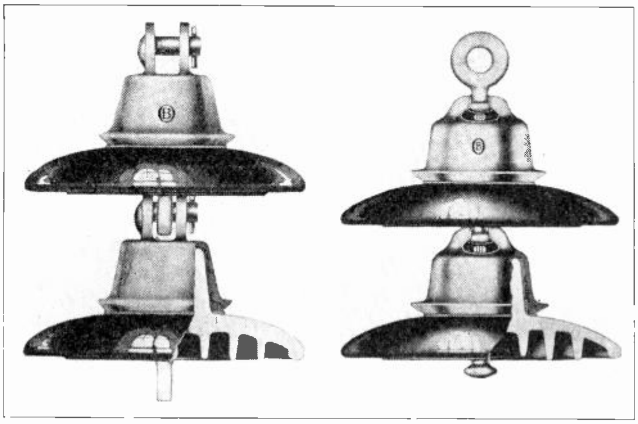

Fig. 338. Suspension insulators which can be fastened together in long strings to insulate high-voltage conductors. Note the two different types of fasteners used for attaching these insulators together. Courtesy of Ohio Brass Co.

per unit. For higher voltages than this two or more units can be connected in series, and in fact, by connecting a sufficient number of these insulators in series in a string, it is possible to insulate a line for practically any voltage.

Strings of suspension insulators have the decided advantage, in that they are flexible and cannot be broken off by ordinary swaying or side stresses of the line. Suspension insulators are used almost exclusively on lines of over 66,000 volts, and in a great many cases on lines as low as 22,000 volts.

Fig. 340 shows a three-phase, 220,000-volt transmission line using suspension insulators with 14 units in each string.

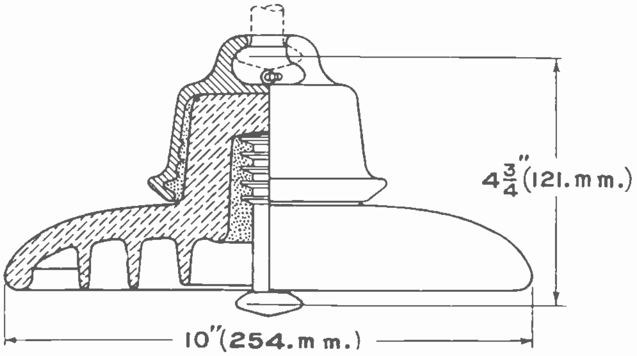

Fig. 339. Sectional view of a suspension type insulator unit showing how the metal cap and pin are securely cemented to the porcelain insulator disk. Courtesy Ohio Brass Co.

Fig. 341 shows a string of 10 suspension insulators flashing over on a test in which nearly 500,000 volts was applied. Tests of this kind are frequently made to determine the actual flash-over voltage of insulator strings before installing them on transmission lines.

340. STRAIN INSULATORS

Strain-type insulators are constructed almost the same as the ordinary suspension type and in fact resemble them so closely that in some cases it is difficult to tell them apart by ordinary observation. The principal difference between them is that the strain-type insulator is generally made much stronger mechanically.

These insulators are used where lines are **dead ended**, or where the lines make sharp or right-angle bends and at other places where there is considerable horizontal stress or strain placed upon the insulators.

Fig. 342 shows strain insulators in use on 132,000-volt line having two three-phase circuits. You will note that the insulator strings are pulled out into almost horizontal position by the strain placed upon them by the dead ended sections of the line on each side of the tower. The line conductor is looped around the insulators by means of the suspended jumper, as shown.

Fig. 343 shows a heavy strain tower used for "dead ending" a 132-kv. line by means of the strain insulators at the upper left on each line conductor.

Suspension insulators are used on this same tower to support the line where it runs down at an angle to the switching equipment, which is not shown in this view.

Pillar-type insulators can also be seen on the structure in the background, where they are used

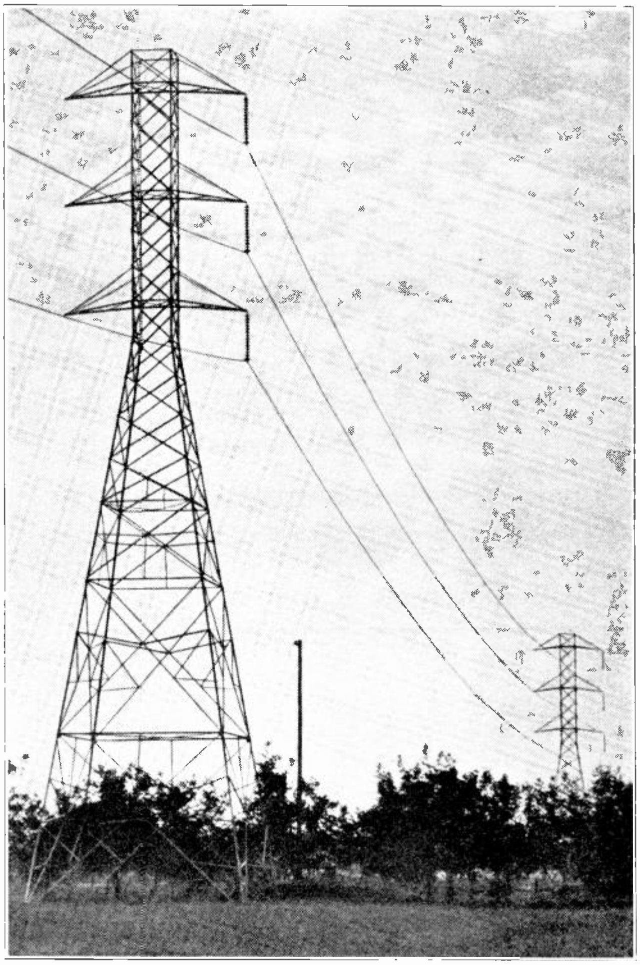

Fig. 340. 220-kv. line on which each conductor is supported by a string of 14 suspension insulator units. Note the arrangement of the three conductors on one side of the towers allowing space for another three-phase line to be put on the opposite side of the towers in the future.

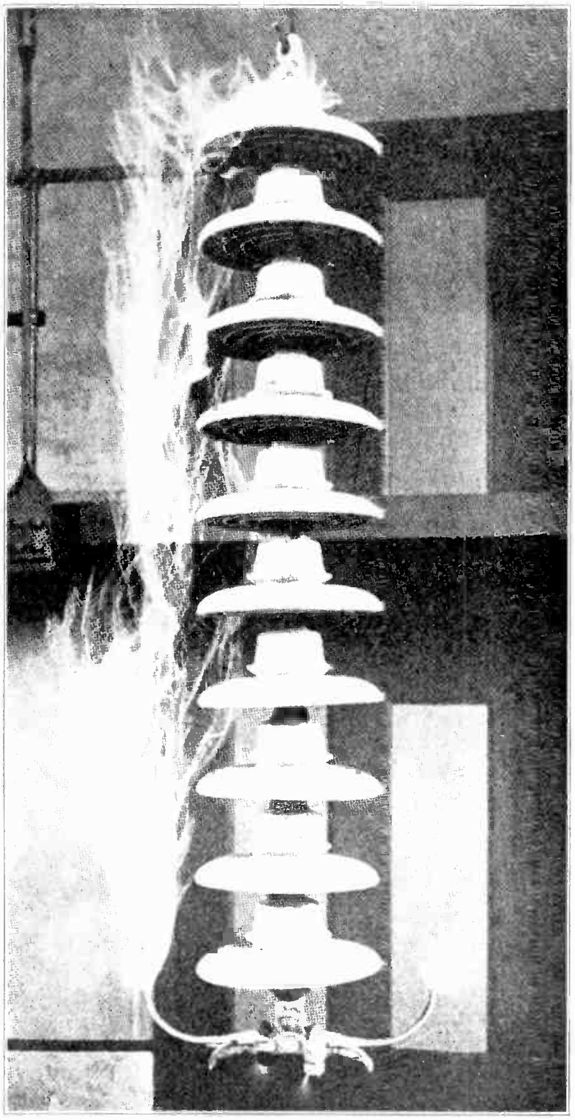

Fig. 341. This very interesting photograph shows an actual flashover or high-voltage arc on a string of 10 suspension insulator units. This flashover was made with 500,000 volts in a test laboratory, but similar flashovers occur on line insulators in service, due to lightning. Courtesy Ohio Brass Co.

to support blades and clips of high-tension air-break switches.

Fig. 344 shows sketches of strain insulators used to anchor the conductors where a line is dead ended to the wall of a power plant or substation building.

The strain insulators are used in these installations to take all strain of the conductor off from the insulating bushings where the conductor runs through the wall.

Where extremely long or heavy conductor spans must be supported and dead ended, if the strength of one string of ordinary strain insulators is not sufficient two or more strings can be used, the strain being divided evenly between the two strings by means of special "evener" yokes, as shown in Fig. 345.

Fig. 346 shows an excellent view of a heavy strain tower with six strings of strain insulators used to support each cable of the long span on the right-hand side. This tower is used on a 110,000-volt line of the Northern States Power Company, where it crosses the St. Croix River at Afton, Minnesota. The length of the span across the river is 3,800 feet and it has a sag of 160 feet.

Steel-core aluminum cables are used and they carry a maximum load of 30,000 lbs. per cable. This tower was designed and erected by the Byllesby Engineering and Management Corporation. Ordinary strings of strain insulators can be seen on the cables leading to the left, and suspension insulators are used to support the jumper or connection between the river span and the cables at the left.

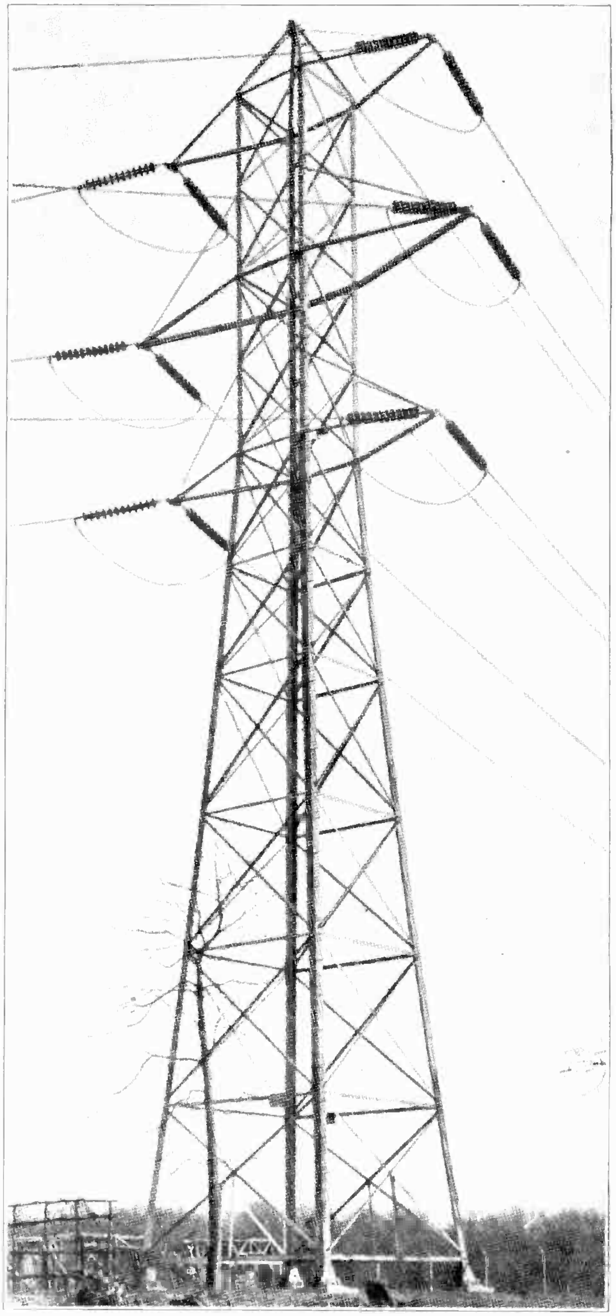

Fig. 342. This photograph shows the use of strain insulators to dead end the conductors of both spans and take all strain in either direction on this one heavy tower. Courtesy Lapp Insulator Company, Inc.

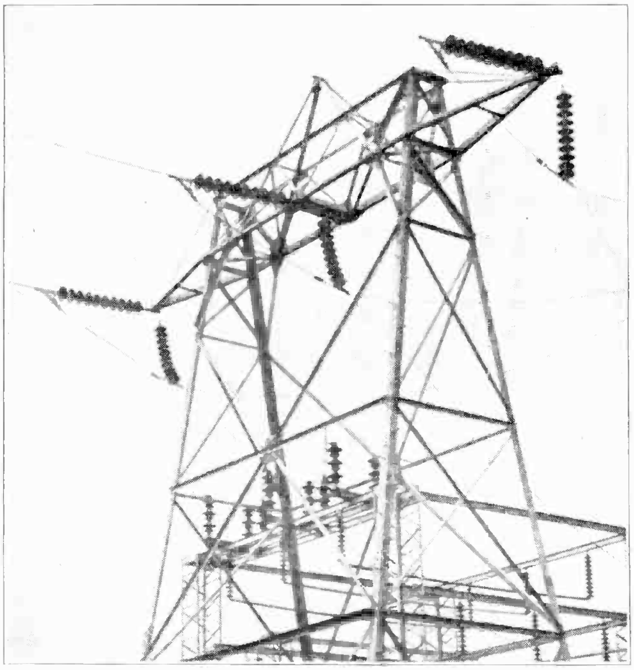

Fig. 343. This photo shows a heavy strain tower with strain insulators supporting the tension of the conductor span, suspension insulators supporting the conductor loops which run down to a substation, and pedestal type insulators in the background supporting high-voltage air break switches. Courtesy Ohio Brass Co.

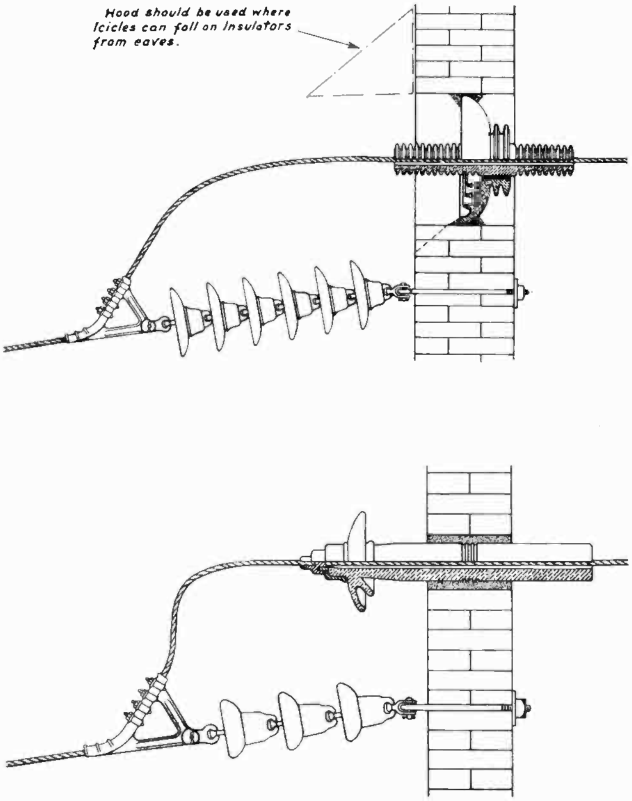

Fig. 344. The above diagrams show methods of using strain insulators to attach line conductors to the walls of substation buildings and keep the strain from the conductor where it enters the building through wall type insulator bushings. Courtesy Ohio Brass Company.

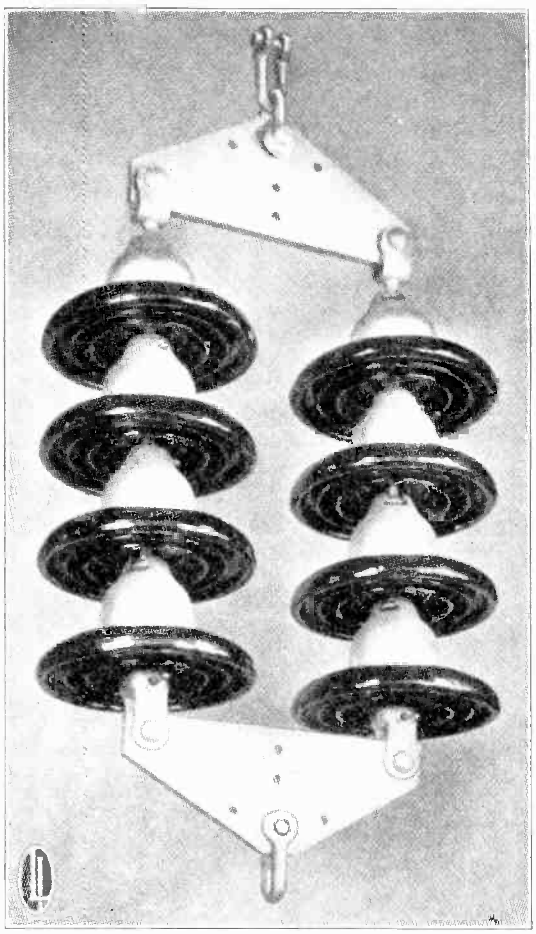

Fig. 345. Two strings of strain insulators fastened together with evener bars to take the strain of a very heavy conductor span. Courtesy Lapp Insulator Co., Inc.

For dead ending small low-voltage conductors and also for insulating guy wires small porcelain strain-insulators of the types shown in Fig. 347 are often used. These insulators have no metal fittings but are simply provided with holes through them on opposite ends and sides so that the conductors can be looped through and tied as shown in the lower view.

341. BUSHING INSULATORS

Bushing-type insulators are used where conductors pass through the roofs or walls of buildings or into cases of transformers, oil switches, etc.

Several bushings of this type are shown in Fig. 348. You will note that they are made with a sort of tubular construction so the conductor can be passed through their centers, and insulated from the surrounding wall or metal tanks by one or more porcelain cylinders of the insulator.

On the left in Fig. 348 is a wall or roof bushing for 6600-volt conductors. The diameter of the skirts on this insulator is approximately five inches, while the length of the unit is about 25 inches. The center view in this figure shows a wall or roof bushing for use on conductors of 100,000 volts. This insulator has a diameter of approximately 16 inches and a length of over 66 inches.

On the right in Fig. 348 is shown a bushing of the oil-filled type, such as used on tanks of oil switches and transformers. Insulators of any type or size are rated in voltage according to actual flash-over tests made by the manufacturers on both wet and dry insulators.

In ordering insulators for any line it is only necessary to specify the line voltage and the type of insulators desired, and any reputable manufacturer will select the proper size and give you prices on them.

In some cases where lines are subject to unusually bad storms, salt or alkali vapors, or highly conductive dust, it may be necessary to over-insulate or use larger insulators or a greater number of units per string than are ordinarily used.

In general, however, insulators that are rated for a given voltage are designed with a certain safety factor or allowance which enables them to stand considerably more than the rated voltage before they will flash over.

342. LINE-SUPPORTING STRUCTURES

All overhead lines must be supported a sufficient distance above the earth to prevent grounds and shorts and also to prevent moving objects, animals, or people from coming in contact with the conductors.

The minimum clearance between conductors and ground is generally at least 15 feet or more on low-voltage lines, and 30 to 40 feet or more on lines between 100,000 and 220,000 volts.

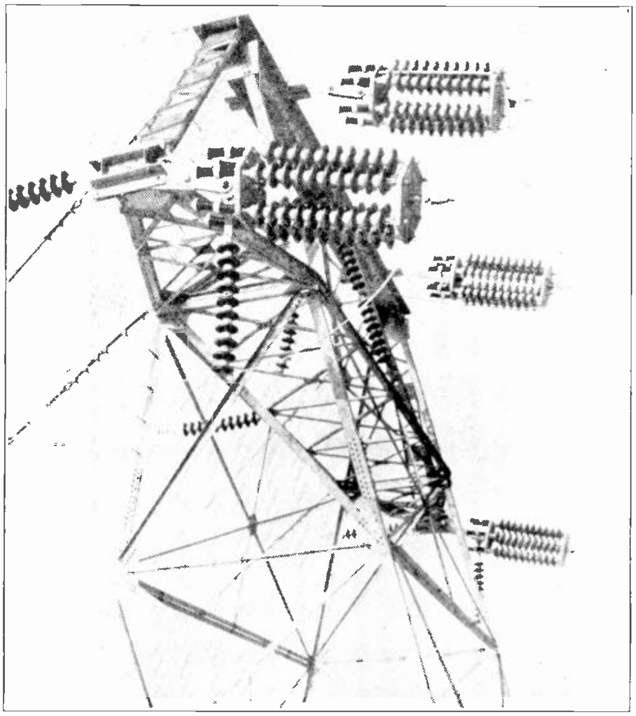

Fig. 346. Extra heavy strain tower with six strings of insulators grouped together on evener plates for each conductor. Note the heavy coil springs on the left evener plates to allow the heavy tension of these 3800-ft. river spans to equalize on all six insulator strings. Courtesy Lapp Insulator Co., Inc.

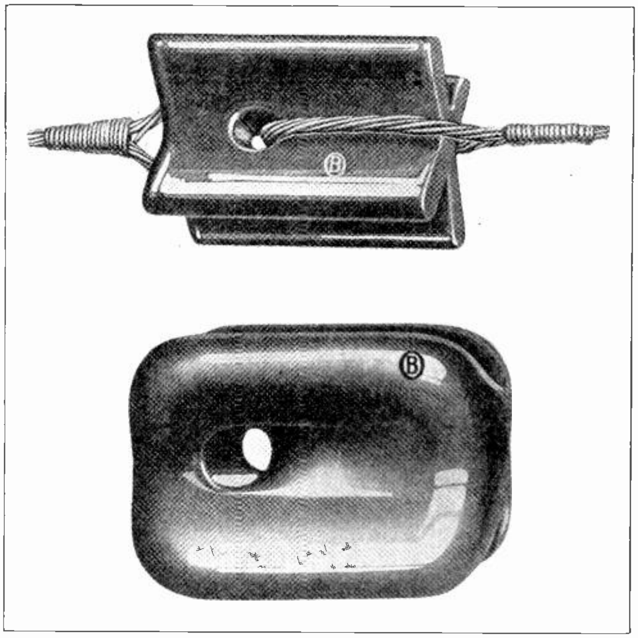

Fig. 347. Two types of small porcelain strain insulators for use on guy wires and low-voltage conductors. Courtesy Ohio Brass Co.

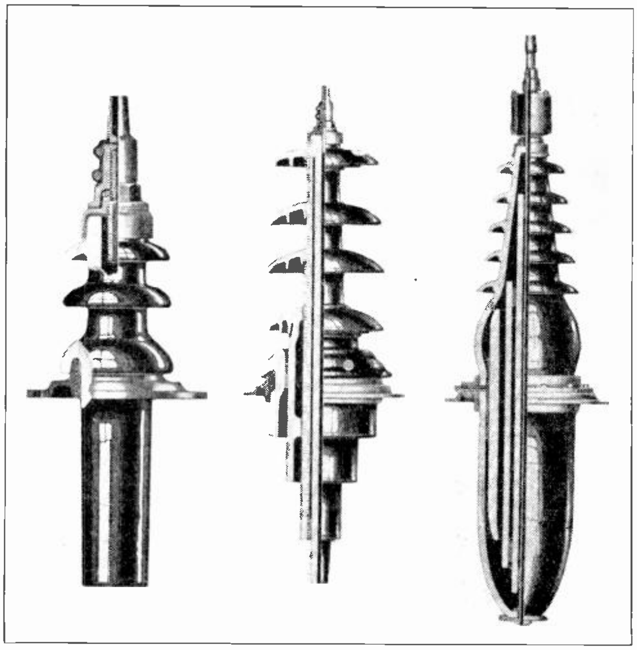

Fig. 348. Three different types of insulator bushings used for transformers and oil switches where the high-voltage conductors enter the metal tanks. Courtesy Ohio Brass Co.

Exact minimum clearances for safety will be covered a little later in this section.

Several different types of transmission line supports are in use. The most common of these are wood poles, concrete poles, expanded steel poles, and steel towers.

Wood poles are very extensively used for transmission lines operating at voltages from 13,200 to 66,000 volts and carrying small or moderate kw. loads. In many cases they are used for higher voltages up to 110,000 volts and even more.

The woods most commonly used for these poles are cedar, pine, chestnut, oak, and cypress. Approximately 60% of all the poles in use in this country are cedar, as these are light in weight and have a very good life.

The principal advantages of wood poles lie in the fact that the wood itself is an insulator and in their low first cost. The main disadvantage is their rather short life, which generally varies from five to fifteen years, according to the kind of wood used and the nature of the climate and soil in the district where the poles are used.

The life of wood poles can be considerably increased—in fact, approximately doubled—by treating their butts with a compound that makes them more resistant to moisture and decay. For this purpose a coal tar product known as creosote is commonly used. It is heated and forced into the pores of the wood under pressure. This treatment not only prevents to a great extent the effects of moisture and frost but it also tends to keep various bugs and worms from eating into poles.

In selecting poles it should be remembered that those which are straight and free from knots, twists, bends, and dry rot have the greatest mechanical strength and best appearance, and should generally be chosen even though their cost is somewhat higher than the poorer grade poles.

Pole Length in feet	Class A Minimum Top Circumference 28 inches.	Class B Minimum Top Circumference 25 inches.	Class C Minimum Top Circumference 22 inches	Class D Minimum Top Circumference 18½ inches.
	Min Cir. 6ft. from butt	Min Cir. 6ft. from butt.	Min. Cir. 6ft. from butt	Min. Cir 6ft. from butt
20	30	28	26	24
22	32	30	27	25
25	34	31	28	26
30	37	34	30	28
35	40	36	32	30
40	43	38	34	32
45	45	40	36	34
50	47	42	38	35
55	49	44	40	36
60	52	46	41	38
65	54	48	43	39

Fig. 349. The above table gives recommended sizes of wood poles of various heights.

Poles of the proper size should be used, in order to give the required strength, and it is not good economy to try to use poles much smaller than those of standard recommended practice.

343. POLE SIZES

First-class red cedar poles should have a minimum top circumference of 28 inches, while second and third class poles may have top circumferences of 25 and 22 inches respectively. These circumferences correspond to diameters of approximately 9, 8, and 7 inches respectively.

The table in Fig. 349 gives the dimensions for poles of various lengths, as recommended by the National Electric Light Association and the American Telephone and Telegraph Company.

This table gives the minimum top circumference for the various classes of poles and also the minimum butt circumference, which is measured at a point six feet from the butt of the pole.

You will note from this table that most poles come in lengths varying in steps of five feet, the one exception being the 22 ft. length.

In certain locations where the line turns a corner or makes a sharp bend, or at points where the line is dead ended, heavier poles than those listed in this table should be used to provide the additional mechanical strength required. Guy wires should also be used on such poles and they should be placed at such an angle as to draw on the pole in the opposite direction to that in which the pull of the line occurs.

344. POLE SPACING

Wood poles are commonly spaced from 100 to 150 feet apart, although in some cases on very light lines they may be spaced as far apart as 200 feet. As there are 5280 feet in a mile, these spacings would give approximately 25 to 50 poles per mile, a fair average for ordinary lines being 35 to 40 poles per mile. The actual spacing chosen depends, of course, upon the size of the conductors and the importance of the line.

Poles should be set sufficiently deep in the ground to stand the side strain placed upon them by wind stresses on the poles and conductors, slightly unequal tension on the spans, etc. This depth generally varies from 5 to 9 feet, according to the height of the pole and the nature of the soil in which it is set. Earth or rock fill should be securely tamped around the base of the pole to give it a firm anchorage.

The table in Fig. 349-A gives proper pole setting depths for poles of various heights, set in different soil conditions.

In sandy or swampy ground large barrels set in the ground around the pole butt and filled with stones or concrete, will greatly improve the pole foundations.

Guy stubs should always be set at least 7 feet deep in any soil except solid rock.

Where lines are subjectd to extra heavy wind pressures or strains or where the soil is rather soft,

Depth of Pole Settings					
Pole Height	Solid Ground Pole Depth		Soft Ground Pole Depth		Solid Rock Pole Depth
	Straight Line	Corners	Straight Line	Corners	
22	5	5	5	5	3
25	5	5½	5½	6	3
30	5	5½	6	6½	3½
35	6	6½	6½	7	4
40	6½	7	7	7½	4
45	6½	7	7	7½	4½
50	7	7½	7½	8	4½
55	7½	8	8	8½	5
60	8	8½	8½	9	5½
65	8½	9	9	9½	5½

Fig. 349-A. Convenient table giving proper depths to which poles of various heights should be set in the ground under varying soil conditions.

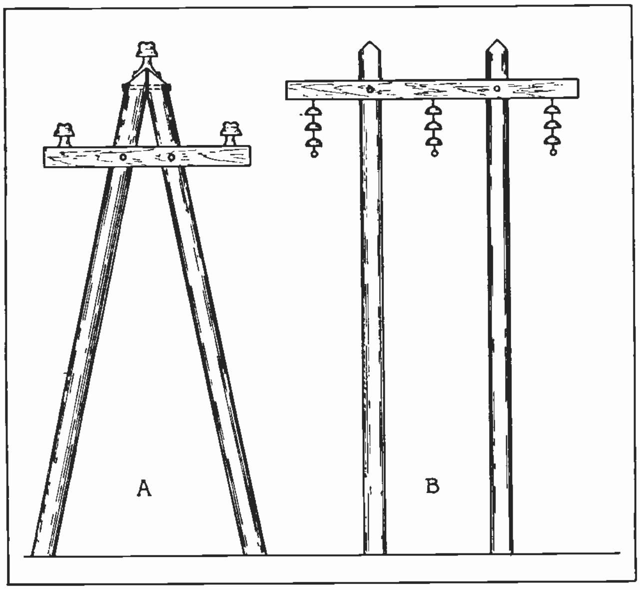

Fig. 350. Two methods of securing additional strength and better footing for pole lines. The structure at "A" is known as an "A frame", while that at "B" is known as an "H frame".

two poles are frequently set with their tops fastened together and the bottoms spaced several feet apart in what is called an "A" frame construction, as shown in Fig. 350-A.

In other cases two poles are set vertically side by side and several feet apart with the cross arm attached to the tops of both in what is called an "H" frame construction, as shown in Fig. 350-B.

345. CROSS ARMS

Cross arms of either wood or metal are used on pole lines to support the insulators and conductors. Wood cross-arms for transmission lines are generally about 4 inches wide by 5 inches high, and their length depends upon the number of conductors they are to carry, and the spacing between conductors according to the voltage of the line.

The pole is notched or slightly flattened where the cross arm is attached, and the arm is securely bolted to the pole. Wood cross arms are generally braced by pieces of strap iron or angle iron, forming a V from each side of the cross arm to the pole underneath it.

Cross arms made of angle iron are used where heavy conductors are to be supported or where severe strains are placed on the arms.

346. SETTING OF POLES

In setting wood poles, holes of the proper depth are dug with the top opening about six inches greater in diameter than the butt of the pole. If the pole butt is widely flared it may be necessary to dig the bottom of the hole even a little larger than the top in order to allow for shifting the pole when setting and aligning it, and also to allow proper tamping of earth or rock fill around the pole.

Poles are set up in the holes by a crew using pikes, or by means of pole setting machines operated on the backs of trucks. In erecting a pole by hand the edge of the hole at which the pole lies should be cut down at a slight angle to allow the pole to slide in the hole more easily. A board can be set on the opposite side of the hole and the base of the pole butted against this board. This helps to guide the pole butt into the hole when the top end is raised.

Heavy poles are often raised by means of a gin pole and block and line.

347. STEEL TOWERS

Steel towers are used on the more important transmission lines operating on the higher voltages and carrying large kw. loads. Steel towers provide line supports which are much more dependable and have a much greater life than wood poles, and for this reason steel towers are generally used on heavy lines where it is important that service interruptions be kept at an absolute minimum.

These towers are made from structural steel and are fabricated in the steel shops. They are then shipped in sections to the locations where they are to be erected. These sections are bolted together and set on small concrete foundations to give them secure and permanent anchorage.

The steel used in these towers is heavily galvanized to prevent rust and corrosion and give them longer life.

The size and weight of steel towers varies considerably according to the size and weight of the line conductors and the location of the towers. Towers located at bends in the line or at points where the line is dead ended are generally built much heavier than the others in the same line, in order to stand the added strains.

The spacing for steel towers generally ranges between 500 and 1000 feet, although in many cases they are spaced at considerably greater distances.

In mountainous regions or where lines cross rivers, spans of several thousand feet are often used. The Southern California Edison Company has several spans nearly a mile in length, using aluminum conductors of over one million circular mils area, and carrying power at a potential of 220,000 volts.

Several types of steel towers have been shown in various figures of this section. Examine each of these and carefully note their construction and bracing. You will note that on all of the taller towers the lower section is flared out to provide a wide base to make their anchorage more secure and enable them to stand side stresses due to wind pressure on the conductors and towers.

The cross arms used on steel towers are usually also built of structural steel fabricated into shapes which provide the best mechanical bracing and the greatest possible strength with light-weight material.

Small steel towers are sometimes bolted together while lying on the ground and are then erected or set up by means of a gin pole and block and line. The larger and heavier towers are usually erected one section at a time, the first large section being set on the concrete foundations and bolted to stubs which are imbedded in the concrete.

The steel pieces for the upper sections are then pulled up a piece at a time and bolted together on top of the section previously completed.

In addition to the large broad-base steel towers slender fabricated steel poles are often used on lighter lines of less importance but where supports with greater life than wood poles are desired.

Tubular steel poles and concrete poles of both solid and hollow construction are also often used for line supports.

348. LINE FITTINGS

In addition to the supports, insulators, and conductors, there are also used in line construction a number of small fittings known as line fittings or line hardware. A number of these fittings are used in fastening suspension insulators to cross arms and attaching conductors to the insulators, both for ordinary suspension and also for dead-ending.

Fig. 351 shows a number of these fittings which are commonly used, and also gives the size and dimensions of some of them. No. 6228 is a socket clevis; 6226 and 6420, socket eyes; 6227 is a ball clevis; 6421 and 6422 are ball eyes; 6453, thimble clevis; 6430, 6375, and 6423 are various types of clevis eyes; 6428 and 6225 are hooks for attaching insulator strings to cross arms; 535, 6410, and 6413 are various types of clevises; 6414, 529, 539, 6491 and 6429 are various types of links.

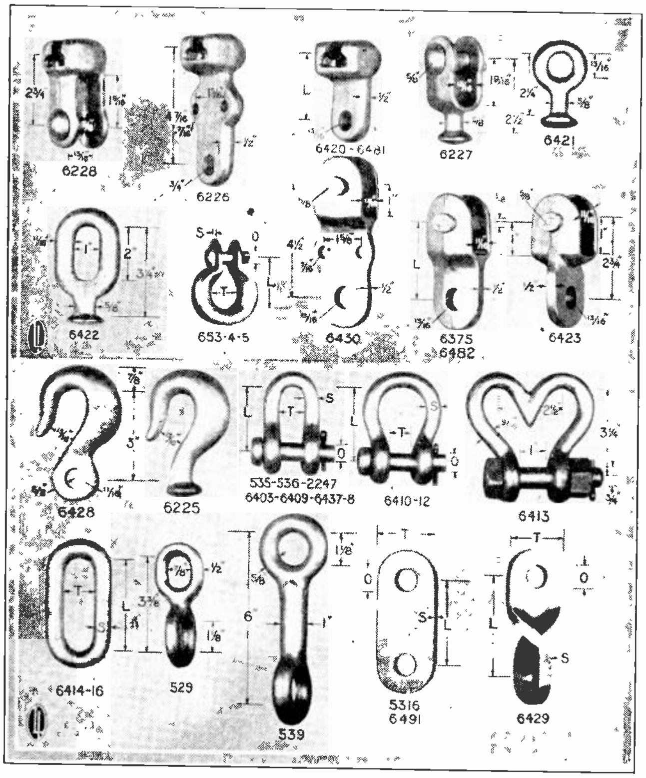

Fig. 351. Above are shown a number of the commonly used types of line fittings or hardware used in connection with suspension insulators. Courtesy Lapp Insulator Co., Inc.

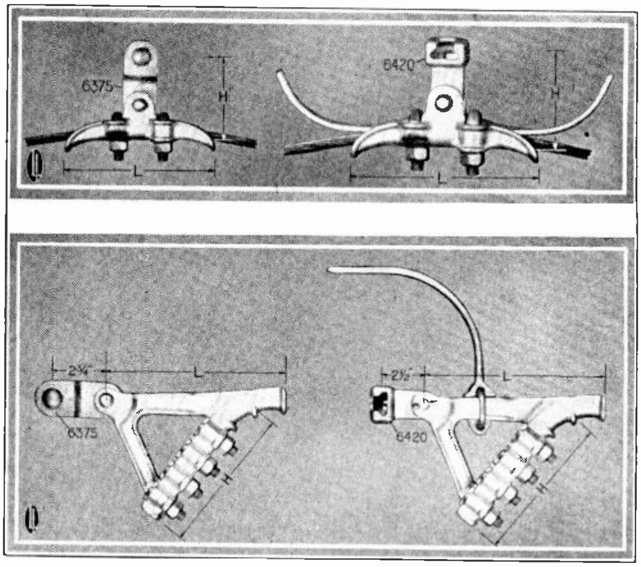

Fig. 352. In the top view are shown two types of conductor clamps for use with suspension insulators. Below are shown strain clamps for dead ending conductor spans. Courtesy Lapp Insulator Co., Inc.

The upper view in Fig. 352 shows two suspension clamps for attaching conductors to the bottom of suspension insulator strings. The one on the left is called a clevis type, and you will note the clevis which is used to attach it to the bottom insulator. The clamp on the right is called a socket type. The socket used for attaching it to the insulator string can be seen fastened to the top of the clamp.

The clamp on the right is also equipped with arcing horns which serve to protect the conductor from burning and pitting in case of a flash-over on the insulator string.

On clamps equipped with these arcing horns any flash-over arc will generally be drawn from the end of one of the horns, and if the arc lasts long enough to do any burning, the end of the horn is burned instead of the conductor from which the arc would otherwise be drawn.

If severe arcs occur between the conductor and tower cross-arm, the conductor is likely to be burned enough to cause it to break and thus put the line out of service.

The lower view in Fig. 352 shows two strain clamps for attaching line conductors to strain insulators. The one on the left is of the clevis type and the one on the right of the socket type. The clamp on the right is also equipped with an arcing horn to carry any flash-over arcs above the string of insulators, which in this case would be hanging in a more or less horizontal position.

The conductor is gripped tightly under the several U-bolts on these clamps, providing a very secure fastening which will stand a great deal of strain.

349. LINE-CONDUCTOR ARRANGEMENT AND SPACING

Transmission-line conductors can be arranged on the poles or towers by a number of different methods. Sometimes they are located in a horizontal plane, as in any one of the top views in Fig. 353. In other cases they are located one above the other nearly in a vertical plane, as shown in any of the center views in Fig. 353.

Another very common arrangement on pole lines is to place the conductors in an equilateral triangle with respect to each other, as shown in the lower views in Fig. 353. The lower center view shows a very uniform and economical arrangement which is extensively used. It requires only one cross arm and provides the same spacing distance between any two of the three conductors. It is from this fact that this arrangement obtains its name of "equilateral triangle", which means a triangle with all sides equal.

Sometimes the conductors of a line are arranged in a triangle with unequal sides or unequal spacing distance between the conductors.

In the lower right-hand view is shown a method of arranging two three-phase lines for the same uniform triangular spacing by placing the three conductors of one line on one side of the pole and those of the other line on the opposite side of the pole.

The center and right-hand views of the center row in this figure each show two three-phase circuits or two-circuit lines.

In spacing conductors or insulators on cross arms, sufficient clearance must be left between conductors of opposite phases or polarity, and also between each conductor and the pole or tower, to prevent any possibility of a flash-over between conductors or from any conductor to the tower.

On towers where suspension insulators are used, the possibility of a certain amount of swaying in the wind must also be considered.

The following list gives practical average conductor spacings for lines of different voltages:

LINE VOLTAGE	CONDUCTOR SPACING IN FEET
2,300	1 to 1.5
6,600	1.5 to 2
13,200	1.5 to 2.5
22,000	2.5 to 3
33,000	3 to 4
44,000	4 to 5
66,000	6 to 8
88,000	8 to 10
110,000	10 to 12
132,000	12 to 14
140,000	12 to 16
220,000	16 to 20

The spacing between conductors should be increased from 10 to 12 inches for each additional 10,000 volts.

On lines where long spans are used there is more possibility of conductors swaying together, and in such cases considerably greater spacing distances are often used.

For example, on heavy power lines with the conductors arranged as in the center or right-hand views in the top row of Fig. 353, the spacing between the conductor and pole or tower as shown at "A" should be approximately two feet on lines of 33,000 volts, 4 feet on lines of 66,000 volts, and 7 to 8 feet on lines of 110,000 volts, etc.

The spacing between the conductors of different phases as at "B" should be about 4 feet for lines of 33,000 volts; 9 to 10 feet for lines of 66,000 volts; and 13 to 15 feet for lines of 110,000 volts; etc.

With the conductors of two separate lines arranged as shown in the center view in Fig. 353, the horizontal spacing between conductors of opposite lines should be somewhat greater than the vertical spacing between phases of the same line.

For a line constructed in this manner the horizontal spacing as at "A" between conductors on the same cross arms would be approximately 10 to 12 feet for lines of 66,000 volts; 15 feet for lines of 110,000 volts; 16 to 20 feet for lines up to 220,000 volts; etc.

The vertical spacing as at "B" would be approximately 7 feet for 66,000 volt lines; 10 feet for 110,000 volt lines; and 14 to 15 feet for lines from 150,000 to 220,000 volt lines.

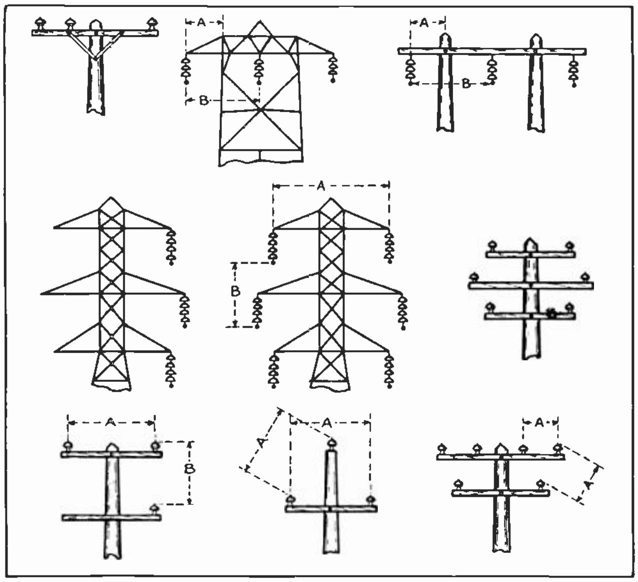

Fig. 353. The above sketches show several different methods of arrangement for conductors on pole and tower lines. Examine each very carefully.

Fig. 354 is a list of a number of transmission lines of different voltages which are in actual service. This is a list of lines which use aluminum conductors supplied by the Aluminum Company of America.

The list gives the types of supporting structures used on each line, the normal and maximum lengths of spans, types of insulators used, number of cir-

VOLTAGE	COMPANY NAME	LOCATION	NORMAL STRUCTURES	NORMAL SPAN (FEET)	MAXIMUM SPAN (FEET)	LENGTH (MILES)	INSULATORS	CIRCUITS	NORMAL ARRANGEMENT OF CONDUCTORS	NORMAL CONDUCTOR SPACING (FEET AND INCHES)		SIZE AND MATERIAL OF CONDUCTORS
										HORIZONTAL	VERTICAL	
220,000	Southern California Edison Co.	Cal., U. S. A.	Steel Towers	660	2870	240	Suspension	2 Single	Flat	17′ 3″	......	605,000 cm A.C.S.R.
220,000	Pacific Gas & Electric Co.	Cal., U. S. A.	Steel Towers and Wood Pole H-frames	425	1510	26	Suspension	2 Single	Flat	19′ 0″	......	518.000 cm A.C.S.R.
165.000	Great Western Power Co.	Cal., U. S. A.	Steel Towers	750	1850	200	Suspension	Single	Flat Unequal Triangle	15′ 0″ 17′ 0″	...... 14′ 0″	336,000 cm A.C.S.R.
110,000	Compania Chilena De Elec.	Chile	Steel Towers	984	2000	66	Suspension	Double	Vertical with Offset	17′ 6″	9′ 6″	3/0 A.C.S.R.
110,000	Hydro Elec. Power Com. Ontario	Canada	Steel Towers	880	1200	38	Suspension	Double	Vertical with Offset	19′ 6″	11′ 0″	605,000 cm A.C.S.R.
110,000	Hydro Elec. Power Com. Ontario	Canada	Single Wood Poles	325	500	68	Suspension	Single	Unequal Triangle	13′ 0″	8′ 0″	4/0 A.C.S.R.
110,000	Shawinigan Water & Power Co.	P. Q., Canada	Steel Towers	530	1290	86	Suspension	Double	Vertical with Offset	20′ 0″	10′ 0″	266,800 cm A.C.S.R.
110,000	Cia. de Lus, Fuerza y Tranvais de Puebla	Mexico	Steel Towers	770	.1200	80	Suspension	Single	....	......	......	240,000 cm All Alum.
110,000	Alabama Power Co.	Ala., U. S. A.	Wood Pole H-frames	600	1300	35	Suspension	Single	Flat	14′ 0″	......	3/0 A.C.S.R.
110,000	Alabama Power Co.	Ala., U. S. A.	Wood Pole H-frames	690	2180	55	Suspension	Single	Flat	14′ 0″	......	397,500 cm A.C.S.R.
110,000	Southern Sierra's Power Co.	Cal., U. S. A.	Steel Towers	660	....	240	Suspension	Double	Vertical with Offset	17′ 6″	10′ 0″	4/0 A.C.S.R.
110,000	San Joaquin Light & Power Co.	Cal., U. S. A.	Single Wood Poles	597	850	200	Suspension	Single	Unequal Triangle	10′ 0″	10′ 0″	266,800 cm All Alum.
110.000	Georgia Railway & Power Co.	Ga., U. S. A.	Wood Pole H-frames	700	1360	18	Suspension	Single	Flat	14′ 0″	......	4/0 A.C.S.R.
60-70,000	Central Georgia Power Co.	Ga., U. S. A.	Steel Towers	500	950	34	Suspension	Double	Vertical with Offset	13′ 0″	6′ 0″	3/0 All Aluminum
60-70,000	City of Winnepeg	Man., Canada	Steel Poles	400	1100	77	Pin Type	Double	Vertical with Offset	8′ 6″	7′ 0″	278,600 cm All Alum.
60-70,000	Manitoba Power Commission	Man., Canada	Steel Poles	500	670	60	Pin Type	Double	Vertical with Offset	7′ 0″	6′ 0″	1/0 A.C.S.R.
60-70,000	Penna. Power & Light Co.	Penna., U. S. A.	Steel Towers	500	1500	30	Suspension	Single	Unequal Triangle	15′ 0″	8′ 0″	4/0 A.C.S.R.
60-70,000	Penn. Public Service Co.	Penna., U. S. A.	Steel Towers	985	2495	19	Suspension	Double	Vertical with Offset	15′ 0″	8′ 0″	4/0 A.C.S.R.
60-70,000	Penna. Water & Power Co.	Pa., Md., U.S.A.	Steel Towers	500	1100	40	Suspension	2 Double	Vertical with Offset	15′ 0″	6′ 0″	300,000 cm All Alum.
60-70,000	Duquesne Light Co.	Penna., U. S. A.	Steel Towers	800	2303	18	Suspension	Double	Vertical with Offset	15′ 8″	7′ 0″	336,400 cm A.C.S.R.
60-70,000	Texas Power & Light Co.	Texas. U. S. A.	Single Wood Poles	300	....	28	Suspension	Single	Unequal Triangle	8′ 0″	5′	3/0 A.C.S.R.
33,000	Kansas Electric Power Co.	Kan., U. S. A.	Single Wood Poles	250	250	10	Pin Type	Single	Equilateral Triangle	3′ 0″	......	No. 2 A.C.S.R.
33,000	Weber Electric Power Co.	Kan., U. S. A.	Single Wood Poles	211	225	21	Pin Type	Single	Unequal Triangle	3′ 0″	3′ 0″	No. 2 A.C.S.R.
33,000	Wellsville Elec., Lt. & Pwr. Co.	Kan., U. S. A.	Single Wood Poles	200	225	11	Pin Type	Single	Flat	3′ 0″	......	No. 4 A.C.S.R.
33.000	Pawnee Power & Water Co.	Kan., U. S. A.	Single Wood Poles	250	250	44	Pin Type	Single	Unequal Triangle	4′ 4″	4′ 4″	No. 2 A.C.S.R.
33,000	Kentucky Utilities Co.	Ky., U. S. A.	Single Wood Poles and H-frames	300	2300	10	Pin Type	Single	Equilateral Triangle	4′ 6″	4′ 6″	1/0 A.C.S.R.
33,000	Kentucky Utilities Co.	Ky., U. S. A.	Single Wood Poles	300	350	22	Pin Type	Single	Equilateral Triangle	4′ 6″	4′ 6″	Nos. 6 & 4 A.C.S.R.
33,000	Kentucky Utilities Co.	Ky., U. S. A.	Single Wood Poles	300	700	66	Pin Type	Single	Equilateral Triangle	4′ 6″	4′ 6″	2/0 A.C.S.R.
33,000	Central Maine Power Co.	Maine, U. S. A.	Wood Pole H-frames	220	900	48	Pin Type	Double	Equilateral Triangle	5′ 0″	......	266,800 cm A.C.S.R.
20-25,000	Eastern Shore Gas & Electric Co.	Del., U. S. A.	Single Wood Poles	150	....	7	Pin Type	Single	Unequal Triangle	3′ 0″	3′ 0″	1/0 A.C.S.R.
20-25,000	Bainbridge Power Co.	Ga., U. S. A.	Single Wood Poles	200	600	12	Pin Type	Single	Equilateral Triangle	3′ 8″	......	No. 4 A.C.S.R.
20-25,000	Kentucky Utilities Co.	Ky., U. S. A.	Single Wood Poles	300	550	16	Pin Type	Single	Equilateral Triangle	4′ 6″	......	No. 2 A.C.S.R.
20-25,000	Minnesota Elec. Distributing Co.	Minn., U. S. A.	Single Wood Poles	225	240	80	Pin Type	Single	Unequal Triangle	4′ 0″	3′ 0″	Nos. 4 and 3 A.C.S.R.
20-25,000	Tri-State Light & Power Co.	Minn., U. S. A.	Single Wood Poles	225	....	15	Pin Type	Single	Flat	2′ 4″	......	No. 4 A.C.S.R.
20-25,000	Missouri Public Utilities Co.	Mo., U. S. A.	Single Wood Poles	200	210	12	Pin Type	Single	Unequal Triangle	4′ 0″	3′ 0″	No. 4 A.C.S.R.
20-25,000	Niagara Falls Power Co.	N. Y., U. S. A.	Steel Towers	350	420	40	Suspension	Double	Vertical with Offset	5′ 0″	5′ 0″	500,000 cm All Alum.
20-25,000	St. Lawrence Transmission Co.	N. Y., U. S. A.	Single Wood Poles	150	200	37	Pin Type	Single	Equilateral Triangle	3′ 6″	......	No. 2 and 1/0 A.C.S.R.
20-25,000	Green Light & Power Co.	Mo., U. S. A.	Single Wood Poles	250	275	40	Pin Type	Single	Equilateral Triangle	4′ 4″	......	Nos. 4 and 6 A.C.S.R.
20-25,000	Benson Elec, Light & Power Co.	N. C., U. S. A.	Single Wood Poles	225	290	15	Pin Type	Single	Unequal Triangle	4′ 0″	4′ 0″	3/0 A.C.S.R.
20-25,000	Sherman Electric Co.	Oregon, U. S. A.	Single Wood Poles	325	475	38	Pin Type	Single	Equilateral Triangle	4′ 0″	......	No. 2 A.C.S.R.
20-25,000	Reedy River Power Co.	S. C., U. S. A.	Single Wood Poles	150	225	23	Pin Type	Single	Equilateral Triangle	3′ 0″	......	No. 1 All Aluminum
20-25,000	Indiana & Michigan Electric Co.	Ind., U. S. A.	Single Wood Poles	175	200	35	Pin Type	Single	Unequal Triangle	3′ 6″	3′ 6″	4/0 A.C.S.R.
13-16,000	Denver Gas & Electric Co.	Colo., U. S. A.	Single Wood Poles	120	200	3	Pin Type	Double	Flat	2′ 4″	......	500,000 cm All Aluminum D.B.W.P.
13-16,000	Denver Tramways Co.	Colo., U. S. A.	Single Wood Poles	110	300	11	Pin Type	Single	Equilateral Triangle	3′ 0″	......	No. 2 and 4/0 A.C.S.R.
13-16,000	Interstate Public Service Co.	Ind., U. S. A.	Single Wood Poles	200	225	32	Pin Type	Single	Unequal Triangle	4′ 0″	3′ 0″	Nos. 6 and 2 A.C.S.R.
13-16,000	Continental Gas & Electric Co.	Iowa, U. S. A.	Single Wood Poles	200	220	22	Pin Type	Single	Equilateral Triangle	3′ 4″	......	Nos. 6 and 4 A.C.S.R.
13-16,000	Iowa Railway & Light Co.	Iowa, U. S. A.	Single Wood Poles	200	250	30	Pin Type	Single	Flat	1′ 5″	......	Nos. 4 and 2 A.C.S.R.
13-16,000	Kansas Electric Power Co.	Kan., U. S. A.	Single Wood Poles	200	....	14	Pin Type	Single	Flat	3′ 0″	......	No. 6 A.C.S.R.
13-16,000	Weber Electric Power Co.	Kan., U. S. A.	Single Wood Poles	200	225	37	Pin Type	Single	Flat	2′ 0″	......	Nos. 6 and 2 A.C.S.R.
13-16,000	Humboldt Light & Power Co.	Kan., U. S. A.	Single Wood Poles	250	....	15	Pin Type	Single	Flat	2′ 6″	......	No. 4 A.C.S.R.
13-16,000	Louisville Railway Co.	Ky., U. S. A.	Single Wood Poles	100	175	25	Pin Type	Single	Equilateral Triangle	3′ 0″	......	1/0 All Aluminum
13-16,000	Minnesota Electric Distrib. Co.	Minn., U. S. A.	Single Wood Poles	300	....	50	Pin Type	Single	Flat	2′ 6″	......	Nos. 4 and 3 A.C.S.R.
13-16,000	Missouri Utilities Co.	Mo., U. S. A.	Single Wood Poles	300	....	50	Pin Type	Single	Unequal Triangle	4′ 0″	4′ 0″	No. 4 A.C.S.R.
13-16,000	Kansas City Power & Light Co.	Mo., U. S. A.	Single Wood Poles	200	225	19	Pin Type	Single	Flat	1′ 8″	......	No. 6 A.C.S.R.
13-16,000	Missouri Gas & Elec. Service Co.	Mo., U. S. A.	Single Wood Poles	200	210	16	Pin Type	Single	Flat	2′ 2″	......	2/0 A.C.S.R.

Fig. 354. The above list gives some very interesting and valuable construction data on actual existing transmission lines of various voltage, and in various parts of this country. Note the voltages used and also the lengths of the various lines, lengths of spans, spacing of conductors, conductor sizes, and number of insulator units. Courtesy Aluminum Company of America.

cuits on each line, arrangement of conductors, horizontal and vertical conductor spacing, and the size of conductors, as well as certain other data.

You will note a considerable variation in the conductor spacings used in practice, but these figures make it easy to determine a safe minimum spacing as well as a practical average.

350. TRANSPOSITION OF LINE CONDUCTORS

Transmission line conductors are subject to the effects of mutual induction from the action on any one conductor by the flux of the other two. On short lines the voltage induced in the line conductors by mutual induction is negligible, but on long lines it becomes quite a factor, and unless provisions are made to equalize the effect on each conductor, it may considerably unbalance the voltages on the different phases at the end of the line.

When line conductors are arranged in an equilateral triangle the effects of mutual induction are balanced equally over all conductors, but when the line conductors are arranged one above the other in a vertical construction, or side by side in horizontal mounting, the center wire is being acted upon by the flux of both the outer conductors, while both of the outer wires are largely acted upon by the flux of the center conductor.

This causes an unequal amount of mutual induction and unequal voltages at the end of the line. To overcome this effect conductors of long transmission lines are generally **transposed** at frequent intervals along the line. Transposing the conductors means that they are interchanged in their positions on the towers, at various points along the line.

Transposing is done in steps, moving the conductors one position at a time or at a certain tower, until all three of them have been rotated in a complete spiral and each conductor returns to its original position in the line.

The top view in Fig. 355 shows a sketch of a complete spiral of the line made in three transpositions, as indicated by the numbers, 1, 2, and 3.

In the first transposition wire A goes from the top position down to the center position and wire B drops from center position to the lower position, while wire C rises from the lower to the top position.

Following each of the wires on through the second and third transpositions, we find that each has returned to its original position.

The center view in Fig. 355 shows one transposition in which the conductors are rotated one-third of a spiral between two special towers. These towers are called transposition towers and each has one cross arm which extends farther out than the other two. By locating this longer cross arm on the top of one tower and on the bottom of the next, the wire can be carried across the other two as shown in the figure, and yet it is held out the proper distance away from the others by the extended cross arms.

At the next step of transposition on this line the long cross arms would be placed one in the center and the other at the top or bottom, according to which wires are being transposed.

351. TRANSPOSITION TOWERS

Special types of towers are designed and equipped with strain insulators for dead-ending the conductors, so that the cross-over or transposition can be made right at the tower and thus avoid crossing the wires between the towers.

This method is illustrated by the lower sketch in Fig. 355. Examine this sketch carefully and note that all three conductors change their position on this tower, and are supported in such a manner that it is practically impossible for any two of them to swing together.

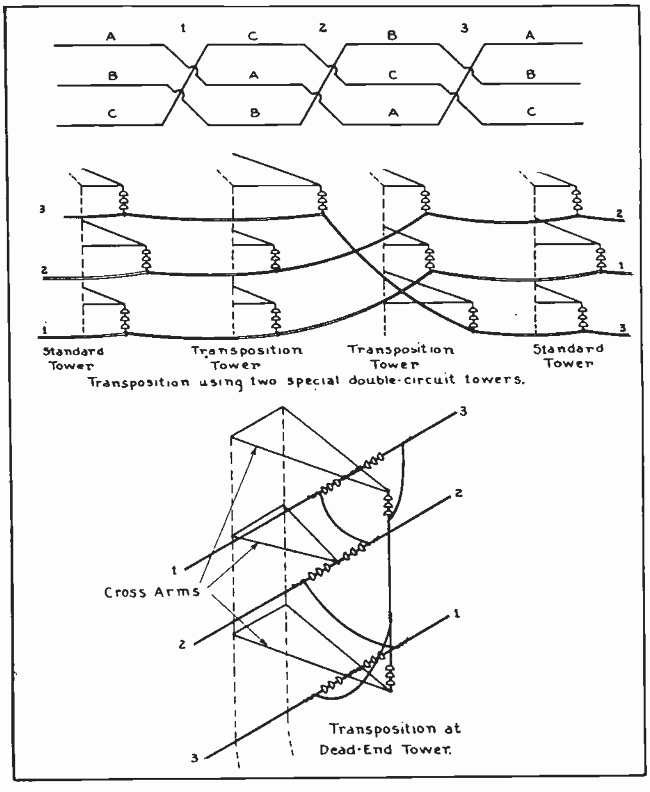

Fig. 355. The top view shows a schematic diagram of transpositions in a power line. The center view shows one method of making a transposition by crossing the conductors between towers, having special extended cross arms, and the lower view shows another method of making a transposition right at one tower with specially constructed cross arms.

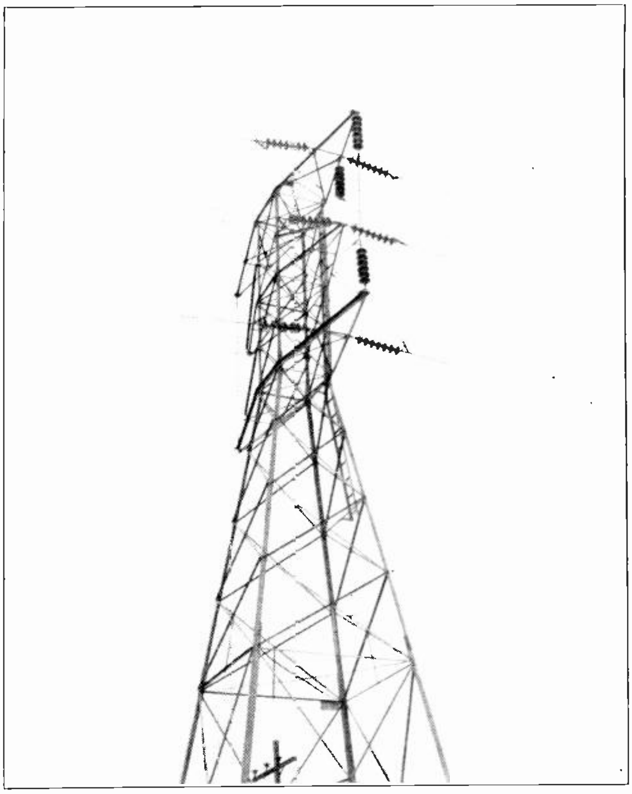

Fig. 356. The above photo shows a transposition tower in a high-voltage line. Note carefully the arrangement of insulators and conductors, and compare this photo with the lower sketch in Fig. 355.

The photo in Fig. 356 shows a transposition made at a tower of this type, and in Fig. 356-A is another view of a transposition tower which is equipped with two extra cross arms at right angles to the main arms, so that the conductor which is carried from the top to the bottom may be crossed over inside of the line wires instead of outside as shown in Fig. 356.

Transpositions in power lines may be repeated at distances ranging from five to forty miles apart, according to the line conditions and according to the location of any neighboring telephone or telegraph lines.

352. REDUCING INTERFERENCE WITH SIGNAL LINES BY TRANSPOSITION

In addition to the benefits derived from equalizing the line voltages by transposition, another very important reason for transposing power lines is to avoid serious interference with neighboring telephone and telegraph lines.

When telephone and telegraph lines run along the same right of way, or even along roads or railways within several hundred feet of power lines for any great distance, there will be a certain amount of sixty-cycle energy induced in the signal lines. This induction causes a very objectionable sixty-cycle hum in telephone equipment and other interference with telephone and telegraph devices.

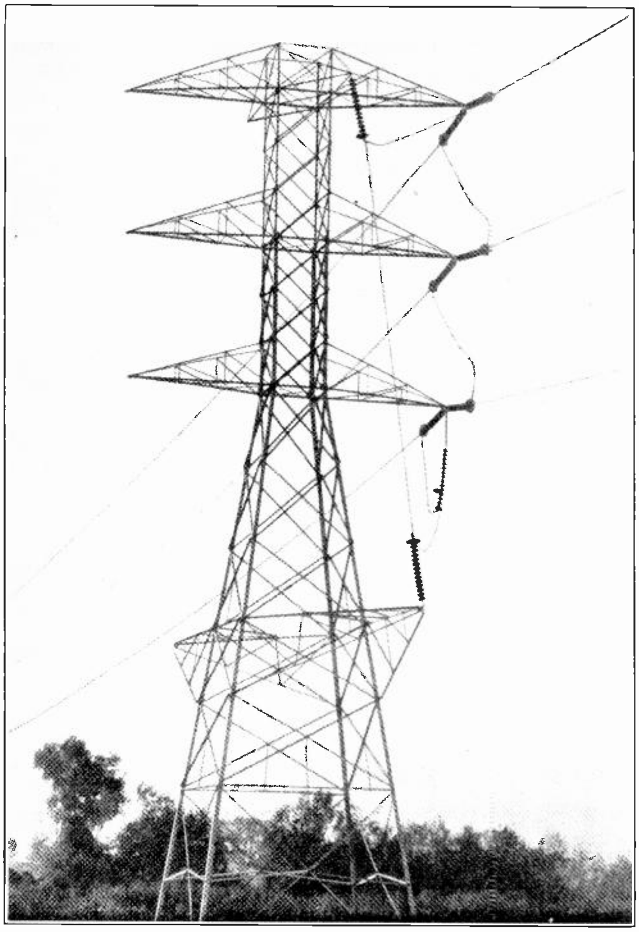

Fig. 356-A. This photo shows another type of transposition tower on which the cross-over of the conductors is accomplished in a slightly different manner from that shown in Fig. 356. Trace each line conductor through from one side of this tower to the other and note how they change in position.

By transposing the power line so that first one phase and then the other is closer to the signal wires, the induction can be largely neutralized or balanced out, because the fluxes of the various phases are 120 electrical degrees out of phase with each other. For this reason it is also a common practice to transpose telephone and telegraph lines from five to twenty times per mile when they run in close proximity to high-voltage power lines.

Power lines which have the conductors arranged in an equilateral triangle do not need to be transposed if they are isolated or located considerable distances away from all telephone and signal lines. But even power lines with this conductor arrangement should be transposed if they run at all near to any signal lines.

Transpositions should be made uniformly so that the conductor will be running in a spiral or screw effect and not merely crossed back and forth in a haphazard manner.

353. LINE CALCULATION

Generally the work of the practical electrician in connection with transmission lines pertains to erection, maintenance, or testing, and very seldom has to do with the design of the lines.

You may, however, at some time or other be required to have in connection with your other work a general knowledge of the more important factors entering into the design of transmission lines. A knowledge of these more essential features of transmission-line construction will at least help you to appreciate the importance of certain requirements in line construction and maintenance work.

You may also have an opportunity to actually plan and install a complete small transmission or distribution line of the more economical pole-construction, to carry power at moderate voltages for a distance of several miles or more.

While the design of a long transmission-line to carry great amounts of power at extremely high voltage requires a great deal of accurate calculation in order to assure best efficiency and economy of operation, there are a number of simple rules which have been established by long experience and practice with various transmission line installations and by which it is possible to plan and install a practical, small transmission or distribution line without the use of any complicated mathematics or calculations.

One of these very important rules is as follows:

For economical transmission allow 1000 volts for each mile of line length and allow 1000 circular mils of copper conductor area for each ampere of current which the line is to carry.

(Note: This rule does not mean that 1000 volts are lost per mile but that 1000 volts actual operating-voltage are to be allowed for each mile of line length.)

There are many short lines which operate at voltages higher than would be obtained by this rule, and there are other lines which operate at lower voltages and are considered to be fairly economical under the conditions; but this rule is very dependable and forms a good, practical basis from which to work or check your figures.

354. PROBLEM

Let us see how this rule can be applied to a practical problem. Suppose we wish to build a line between two points twenty miles apart and to carry 1200 kw. at 80% power factor.

One important part of our problem is to determine what voltage we should use and what size conductor should be installed. We can readily see that the longer the line, the greater the voltage which will be necessary; and the greater the load, the larger conductor we must use in order to secure practical economy.

According to the rule of 1000 volts per mile, we should use 20 × 1000, or 20,000 volts. As 22,000 volts is standard we shall select equipment for this voltage.

To determine the load in amperes we can use the formula:

$$I = \frac{\text{kw.} \times 1000}{1.732 \times \text{p.f.} \times E}$$

or, in this case:

$$I = \frac{1200 \times 1000}{1.732 \times .8 \times 22{,}000}, \text{ or } 39.3 \text{ amperes.}$$

Then, according to our rule of 1000 circular mils conductor area for each ampere of current, our conductor size should be:

39.3 × 1000, or 39,300 circular mils.

As this is very close to the 41,740 C.M. area which represents a No. 4 conductor, we shall select this size of wire.

Sometimes conductors larger than those required by the formula are used in order to obtain the necessary mechanical strength for the spans between poles. A No. 4 conductor is about as small as can be used practically for transmission line spans of any length; although smaller wires are sometimes used on short distribution lines in towns or rural districts.

It is generally considered that a transmission line, in order to be practical, **should not have losses greater than ten per cent.** of the total power transmitted.

The transmitting voltage and conductor size arrived at by use of the simple rule just given can very easily be checked by using Ohms law formulas with the known load in amperes and the resistance of the conductor chosen.

We know that I × R = E, or, in this case, the line current times the line resistance will give the voltage drop of the line.

This voltage drop when multiplied by the line current will give the line loss in watts; so if the voltage drop is not over 10% the line loss will not be over 10%.

For example: in the problem just given we have the resistance of 20 miles of No. 4 wire to consider. The table in Fig. 327 shows that the resistance of No. 4 wire is about .25 ohms per 1000 feet.

There are 5280 ft. per mile, so 20 miles equals 20 × 5280, or 105,600 ft. As the resistance is given in ohms per 1000 ft., we first divide 105,600 by 1000, and get 105.6. Then the total resistance of one line conductor will be .25 × 105.6 or 26.4 ohms.

Then, with a line current of 39.3 amperes, the voltage drop per wire will be I × R or 39.3 × 26.4, or 1037.52 volts; which is only approximately 5% of the chosen line voltage.

The line loss in watts per conductor will be I × Ed; or 39.3 × 1037.52, or 40,774.5 watts, or 40.7 kw. The total loss due to resistance and voltage drop in the three wires will therefore be 3 × 40.7, or 122.1 kw., or just slightly more than 10% of the total power load on the line.

355. FORMULA FOR CONDUCTOR SIZE

The circular mil size of conductor which should be used for a given load on small low-voltage, single-phase lines can be easily calculated by means of the same formula given in Section Two on Electrical Wiring for calculating the size of feeder conductors. This formula is repeated here for your convenience:

$$\text{C. M. area} = \frac{10.8 \times L \times 2 \times I}{Ed}$$

In which:

L = length of line one way
I = load in amperes
Ed = allowable voltage drop.

For three-phase lines the formula can be used with the constant 1.732, as follows:

$$\text{C. M. area} = \frac{10.8 \times 1.732 \times L \times I}{Ed}$$

In which:

$1.732 = \sqrt{3}$

$$I = \text{current per phase, or } \frac{\text{kw.} \times 1000}{1.732 \times E \times \text{P. F.}}$$

$$\text{or } \frac{\text{kv-a.} \times 1000}{1.732 \times E}$$

L = length of line in feet, one way only.

356. LINE REACTANCE AND CAPACITY

So far we have considered only the losses due to resistance and resistance voltage drop in the lines; but A. C. lines have a certain amount of inductive reactance and capacity reactance, both of which cause line losses and must be considered in calculations for long high-voltage transmission lines.

The capacity reactance is usually negligible on small low-voltage lines, and the inductive reactance in ohms can also often be ignored on small lines.

The inductive reactance varies with the size of the conductors and the distance they are spaced apart.

The table in Fig. 357 gives the inductive reactance (X_L) in ohms per 1000 ft. of line for various sized conductors having different spacings. These figures are given for 60-cycle lines. For 25-cycle

Inductive reactance in ohms per 1000 ft., for various conductors on 60 Cycle Lines

	Spacing between wire centers.									
	1 inch	2 inches	6 inches	1 foot	1½ feet	2 feet	3 feet	4 feet	5 feet	6 feet
B&S Gauge 8	.0687	.0845	.1097	.1256	.1349	.1415	.1508	.1574	.1625	.1667
6	.0633	.0792	.1044	.1203	.1296	.1362	.1455	.1521	.1572	.1613
4	.0580	.0739	.0991	.1150	.1243	.1309	.1402	.1468	.1519	.1561
2	.0527	.0686	.0938	.1097	.1190	.1256	.1348	.1414	.1466	.1507
1	.0501	.0659	.0911	.1070	.1163	.1229	.1322	.1388	.1439	.1481
0	.0474	.0633	.0885	.1043	.1136	.1202	.1295	.1361	.1412	.1454
00	.0447	.0600	.0858	.1017	.1110	.1176	.1269	.1335	.1386	.1427
000	.0421	.0580	.0832	.0991	.1084	.1150	.1242	.1308	.1360	.1401
0000	.0394	.0553	.0805	.0964	.1057	.1123	.1216	.1282	.1333	.1374
Circular Mils.										
350,000			.0746	.0905	.0998	.1064	.1157	.1223	.1274	.1316
500,000			.0710	.0864	.0957	.1023	.1116	.1182	.1233	.1274
1,000,000			.0630	.0784	.0877	.0943	.1036	.1102	.1153	.1194

Fig. 357. This convenient table which gives the inductive reactance in ohms per thousand feet for various conductor sizes and spacings can be used to save considerable time in making transmission line calculations.

lines the inductance in ohms for any certain conductor size and spacing will be 25/60 of that given in the table.

The values in the table will also be the volts drop per ampere, per 1000 ft. of conductor.

By referring to the table you will note that with large conductors closely spaced, the inductive reactance is very small; while on other lines with small conductors widely spaced, the inductive reactance in ohms may be equal to or even more than the resistance in ohms.

Assuming that the No. 4 conductors in our last problem are spaced 36 inches apart, we find in the table that such a line would have .1402 Ohms X_L per 1000 ft. of conductor.

Then, as our line length was 20 miles or 105.6 thousands of feet, the inductive reactance per conductor will be 105.6 × .1402, or 14.8 ohms; as compared with 26.4 ohms resistance.

Then, to get the approximate impedance of the line, we combine the resistance of 26.4 ohms which we have previously found with the inductive reactance of 14.8 ohms, by means of the formula for impedance of series A. C. circuits, or

$$X = \sqrt{R^2 + X_L^2}$$

or,

$$Z = \sqrt{26.4^2 + 14.8^2}, \text{ or approximately 30 ohms.}$$

For making calculations as to the size of conductors for a transmission line there is another convenient rule which often serves as a practical guide. It is known as Kelvin's Law. This rule is as follows:

The economical conductor is one in which the current density is such as to make the annual interest on the value of each mil-foot of conductor equal to the annual value of the power lost on each mil-foot.

There are some cases in which this rule cannot be strictly followed, but it is a very good rule to keep in mind. Both this rule and the one of 1000 volts per mile and 1000 circular mils per ampere will be very handy in checking any of your figures on such problems and will help you avoid making any serious mistakes in planning a small transmission or distribution line.

In addition to the resistance and impedance losses in transmission lines there is also the capacity reactance and loss which was previously mentioned, and which is negligible on small lines but must be considered on long high-voltage lines.

357. CHARGING CURRENT

The capacity or condenser effect of a long transmission line with its high-voltage conductors running parallel and separated by air is quite considerable; and such long lines often draw quite a large amount of **charging current**, even when the load is disconnected from the receiving end.

This charging current flows in and out of the line at the generator and just as though the generator terminals were connected to a huge condenser.

Lines operating at voltages in the neighborhood of 100,000 or more will often require charging currents of several amperes, and this current flowing at the high voltages used causes the line to draw a charging load of several thousand kv-a. or more in many cases.

Knowing that transmission lines can store a charge of this amount we can readily see the necessity for short-circuiting or grounding them before working on the conductors, even though we know they have been disconnected from the power source.

358. SKIN EFFECT AND CORONA

Another factor which is sometimes considered on very long lines, and particularly on those of higher frequencies, is the **skin effect** of alternating current.

The term skin effect refers to the tendency of A. C. to flow more in the outer area of the conductor than through the center. This is caused by the action of the flux around the conductor upon the current within it, and the higher the frequency the greater is this tendency of the current to crowd toward the outer surface of the conductor.

On very high frequency equipment such as that used in radio stations skin effect is a very important factor, but on transmission lines operating at 60 cycles or lower frequencies it is a very small item, and is negligible on the smaller lines of moderate voltages.

Another loss sometimes considered on very high voltage lines is a sort of brush discharge from the conductors into the atmosphere. This discharge is called **corona.** Corona discharge takes place more freely on small conductors and from sharp points on the conductors or live metal fittings on the lines, and actually causes a small amount of energy loss.

Large diameter aluminum conductors are somewhat less subject to corona losses and skin effect than smaller copper conductors are.

359. SAG AND TENSION

In planning a transmission line or distribution line there are certain important mechanical factors which must be taken into consideration in addition to the electrical loss and current capacity of the line.

The **sag** and **tension** of the line conductors are two of these very important mechanical factors, as they determine the amount of strain on the conductors. Transmission line conductors between poles or towers cannot, of course, be drawn up absolutely straight or until there is no sag; because even to draw them up until there is no noticeable sag would place on the conductors a tension and strain sufficient to break them.

For this reason a certain definite amount of sag is always planned and allowed, according to the size and type of conductors and the length of the spans. A certain amount of sag or slack in the con-

Breaking Strength and allowable tension of hard drawn and annealed copper conductors

Wire Size in cir. mils & B & S Gauge	Hard Drawn Copper		Annealed Copper	
	Breaking Strength in Pounds.	Safe Tension in Pounds	Breaking Strength in Pound	Safe Tension in Pounds
350,000 C.M.	15125	7562	9350	4675
250,000 C.M.	10780	5390	6664	3332
0000	8260	4130	5320	2660
000	6550	3275	4220	2110
00	5440	2720	3340	1670
0	4530	2265	2650	1375
1	3680	1840	2100	1050
2	2970	1485	1670	835
3	2380	1190	1323	661
4	1900	950	1050	525
5	1580	790	884	442
6	1300	650	700	350
7	1050	525	556	278
8	843	421	441	220

Fig. 358. This table should be referred to in determining the sag and tension of copper conductor spans in order not to exceed the safe operating tension on the conductors.

ductors is also necessary to allow for expansion and contraction with changes of temperature. If the conductors were strung up very tightly during hot summer weather they would break from contraction during cold weather.

An excessive amount of sag is likewise undesirable because it gives a bad appearance to the line and requires higher poles or towers to keep the conductor the required distance from the ground; and also because it allows the conductors to sway excessively in the wind and creates the risk of their shorting together.

For these reasons the sag and tension of transmission line conductors is generally calculated quite accurately in planning and erecting the lines. The proper sag in feet for any given conductor span can be determined by the following simple formula:

$$S = \frac{L^2 \times W}{8T}$$

In which:

$S =$ sag in feet
$L =$ length of span in feet
$W =$ weight of conductor in lbs. per foot
$T =$ tension in lbs. on the conductor.

The allowable tension can be determined from a table of strengths or safe working tensions for various conductors. The table in Fig. 358 gives both the breaking strength and the safe allowable tension on copper conductors of the sizes more commonly used for small lines.

The allowable tension on larger conductors can be taken from the manufacturer's data or can be determined from the known breaking strength per square inch of hard drawn copper or aluminum, whichever conductor may be used. You will note from this table that the practical allowable tension on any of the conductors is considered to be about half of the actual breaking strength.

If lines were constructed with tensions much closer to the actual breaking strength of the conductor, the copper would become stretched and the risk of broken conductors and interrupted service would be too great.

360. PROBLEMS

To use the formula for determining the sag in a practical problem, let us suppose we are running conductors of No. 0 hard drawn copper wire on poles 200 feet apart. From the table in Fig. 327 we find that the weight of bare No. 0 copper wire is 322.4 lbs. per 1000 feet, which would be .3224 lbs. per foot. From the table in Fig. 358 we find that the safe tension for No. 0 hard drawn copper is 2265 lbs.

Now, putting these values into the formula, we have:

$$S = \frac{200^2 \times .3224}{8 \times 2265}, \text{ or approximately .71 feet}$$

which should be the sag of this conductor.

This amount of sag would be correct for the conductor as long as the temperature remained the same as during the time the conductor was being installed.

But if the line is erected during hot summer months, a little extra sag should be allowed so that the tension will not be too great during colder weather.

Sags of 2 to 5 feet are common with pole lines having short spans, and sags of 5 to 15 feet are common with steel tower lines having longer spans. Sags of 15 to 30 feet are often used on special long spans, and where conductors may cross wide rivers or valleys the sag may be 100 feet or more in a span of several thousand feet between towers.

The tension (T) in pounds which will be placed on the conductors by any given sag in feet can be calculated by the following simple formula:

$$T = \frac{L^2 \times W}{8S}$$

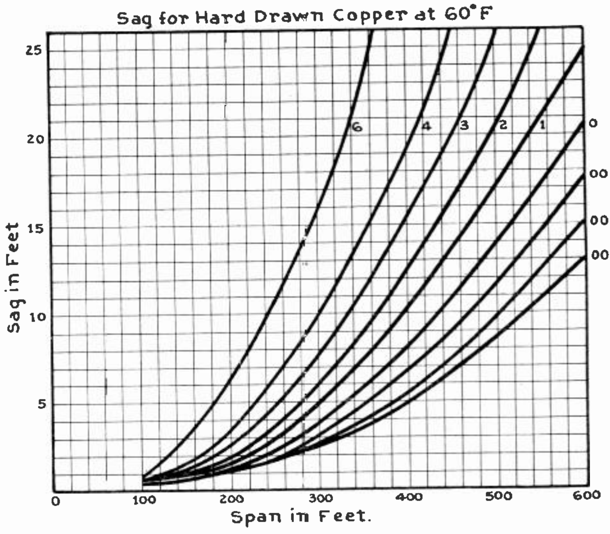

Fig. 359. The proper sag for various spans and various sized copper conductors between No. 0000 and No. 6 can be quickly and easily found from the above chart and curves as explained in the accompanying paragraphs.

For example, suppose we wish to find the tension that will be placed upon a No. 000 conductor on spans 500 feet long if the conductor is sagged 10 feet between towers.

From the table in Fig. 327 we find that the weight of 000 bare copper wire is approximately 512 lbs. per thousand feet, or .512 lbs. per foot. Then, according to the formula:

$$T = \frac{500^2 \times .512}{8 \times 10}, \text{ or } 1600 \text{ lbs.}$$

By looking in the table in Fig. 358 we find the safe tension in lbs. for 000 hard drawn copper is 3275 lbs. or nearly double the tension on the span in this problem.

Suppose in another case that an observation made during cold weather showed the sag on a certain 600-foot span of 000 hard drawn copper conductor to be only 5 feet; then we find that according to the formula the tension on this span equals

$$\frac{600^2 \times .512}{8 \times 5}, \text{ or } 4608 \text{ lbs.}$$

which the table in Fig. 358 shows is considerably more than the safe tension for 000 hard drawn copper.

In such a case this span should be given more sag before the conductor is stretched or broken.

The chart in Fig. 359 gives curves from which it is easy to determine the recommended sag in feet for conductors ranging from No. 6 to No. 0000 on spans ranging from 100 to 600 feet. These recommendations apply to conductors which are being erected and sagged at temperatures of approximately 60° F.

To determine the recommended sag it is only necessary to start at the proper point on the bottom of the chart for the span in question, and then run upward to the point where the vertical line strikes the curve for the size of conductor to be used.

The table in Fig. 360 gives recommended sags for steel-reinforced aluminum conductors ranging in sizes from 4 to 0000 and for spans of 200 to 1000 feet. These sags allow for a temperature range from 40 degrees below zero to 110 degrees above zero, Fahrenheit, and also for one-half inch of sleet and a sixty-mile wind, and the additional stress that these factors occasionally place upon the conductors.

361. ICE AND WIND STRESS

In many parts of the country sleet, ice and wind greatly increase the stress placed on line conductors. In certain localities it is not uncommon for line conductors to be coated occasionally with from one-half inch to an inch or more of sleet.

The ice not only increases the weight on the conductor but also increases the conductor area, thereby increasing the amount of wind stress placed upon it. Ice weighs approximately 57 lbs. per cubic foot; and one-half inch of ice all around a No. 0000 cable will make the total weight just about double that of the bare conductor, or approximately 1.28 pounds per foot of conductor length.

Sags for Steel Cored Aluminum Conductors.								
Sag in feet	Sag in feet Conductor Sizes in B & S Gage							
	4	3	2	1	0	00	000	0000
200	4.1	3.4	2.8	2.5	2.	1.8	1.5	1.3
300	9.3	7.7	6.2	5.5	4.6	4.	3.4	2.8
400	16.5	13.7	11.1	9.7	8.2	7.	6.	5.
500	26.	21.4	17.3	15.1	12.7	10.9	9.3	7.8
600	37.	31.	25.	22.	18.3	15.7	13.5	11.3
700	50.5	42.	34.	29.5	24.9	21.4	18.3	15.3
800	66.	54.5	44.	39.	32.6	28.	24.	20.
900	84.	69.	56.	49.	42.	35.4	30.	25.3
1000	103.	85.	69.	60.	51.	44.	37.3	31.2

Fig. 360. This little table gives the proper sag for various length spans and various sizes of aluminum conductor.

From this we can see how very important it is to allow for the additional stress which may be placed upon conductors in many localities by sleet.

Strong winds place considerable additional side stress on both the conductors and the supporting poles or towers.

362. PROBLEMS

The wind pressure in lbs. on a round conductor may be easily determined by the following simple formula:

$$P = .0025 \times V^2 \times D \times L$$

In which:

P = total wind pressure in lbs.
.0025 = constant
V = wind velocity in miles per hr.
D = diameter of conductor in feet (not in inches)
L = length of wire or span in feet.

For example, suppose we wish to determine the wind stress of a 60-mile wind on the three conductors of a 1000-foot span, using steel-reinforced, aluminum cable of 715,500 circular mils area.

From the table in Fig. 327-B we find that the diameter of this conductor is just slightly more than one inch. As the formula requires the use of the conductor diameter in feet or a fraction of one foot, our conductor diameter in this case will be stated as 1/12 of a foot, or .083 ft.

Now, using these figures in the formula, we have:

$$.0025 \times 60^2 \times .083 \times 1000, \text{ or } 747 \text{ lbs. stress}$$

on each conductor.

Then, to get the total stress on all three conductors, we must multiply by 3; and $3 \times 747 = 2241$ lbs. total stress on the three conductors of this span.

In case these conductors became covered with a half-inch of sleet this will increase their diameter to twice that of the bare metal, and thereby double the wind stress.

From this we can see that the wind stress on transmission lines is also a very important factor and must be considered and allowed for in the construction of lines and in determining proper strengths of poles, towers, and cross arms; security of foundations; etc.

In many cases where lines are frequently subjected to high velocity winds blowing at right angles to the line, side-guys are used and consist of guy wires run out on each side of the poles or towers.

The wind pressure on a round pole can be calculated by the same formula as used for conductors, except that the diameter and length of the pole are substituted for those of the conductor.

To determine the wind stress on flat surfaces of towers, we can use the simple formula:

$$P = .0036 \times V^2 \times A$$

In which:

P = pressure in lbs. per square foot
V = velocity of wind in miles per hr.
A = area in sq. ft. of tower surface exposed to wind.

363. LINE COSTS

In building any transmission lines, large or small, careful listing of all materials and planning of all work in advance will save great amounts of time and money.

The principal items of expense on a small pole line are as follows: Cost of right of way, clearing right of way, poles, crossarms, conductors, insulators, fittings, shipping and hauling of materials, labor costs, overhead and miscellaneous expenses, accident insurance for employees, etc.

In shipping and hauling materials to the locations along the right of way, great care should be used to see that the right materials and amounts are left at each point.

A lineman who understands these fundamentals is the man who will make a good foreman and be of great value to his employer; or, in case you plan and build a small line yourself as many of our graduates have done, keeping these points well in mind will help you to save time and money and make the job practical and profitable.

The list of items and costs of materials shown in the following estimate form for a 132-kv., 100-mile transmission line will, if carefully studied, give you a good idea of the comparative costs of various items, and will also familiarize you with the various terms and materials used in a large high-voltage line.

Small pole lines would, of course, involve only a small fraction of this number of items and of the costs given in this estimate.

ESTIMATE

The following is a convenient form for estimating the cost of a single-tower, double-circuit, 132 kv., 100-mile transmission line:

Physical Characteristics—

1. Width of right of way	120 ft.
2. Total number of towers	660
3. Number of strain towers	40
4. Number of semi-strain towers	100
5. Number of suspension towers	520
6. Average number of towers per mile	6.6
7. Weight of steel including footings of each strain tower	13,340 lb.
8. Weight of steel including footings of semi-strain tower	10,970 lb.
9. Weight of steel including footings of each suspension tower	9,000 lb.
10. Type and size of conductors, 21,600 c.m. stranded copper	
11. Number of conductors per tower	6
12. Weight of conductors per mile of line	20,124 lb.
13. Weight of reels per mile of line	3,240 lb.
14. Total weight of conductors and reels per mile of line	23,364 lb.
15. Type and size of guard wire 7/16 in. (7 No. 7 wires) copperweld	
16. Number of guard wires per tower	2
17. Weight of guard wires per mile of line	4,414 lb.
18. Weight of reels per mile of line	1,080 lb.
19. Total weight of guard wires and reels per mile of line	5,494 lb.
20. Size of insulator units	10 in.
21. Number of units per string	10
22. Number of strings required	5,280
23. Weight of insulators per string	120 lb.
24. Weight of hardware per string	30 lb.

Costs—

25. Right of way 120 ft. wide at $3,000 per mile	$300,000

Materials—

26. Steel for towers and footings, 6,310,600 lb. at 5.5 cents per lb.	$347,083
27. Plus 10 percent. for special construction	34,708
28. Conductors, 2,143,360 lb. at 18 cents per lb.	385,805
29. Guard wires, 441.400 lb. at 15 cents per lb.	66,210
30. Insulators 5280 strings at $23	121,440
31. Insulator hardware for 4230 strings at $5.50	23,760
32. Insulator hardware for 960 strings at $9.00	8,640
33. Concrete footings for dead-end towers, 1500 yd. at $20	30,000
34. Total cost of materials	$1,017,646

Railroad Freight—

35. On towers and footings, 6,941,660 lb. at 30 cents per 100 lb.	$ 20,825
36. On conductors and guard wires, 3,016,760 lb. at 45 cents per 100 lb.	13,575
37. On insulators and hardware, 1,056,000 at 40 cents per 100 lb.	4,224

38. On returned reels, 432,000 lb. at 45 cents per 100 lb.	1,944
39. Total railroad freight	$ 40,568
Hauling to Site of Erection.	
40. On all materials, 7500 tons at $5 per ton	$ 37,500
41. Total cost of items 34, 39 and 40	1,095,714
Labor—	
42. Clearing right of way $300 per mile	$ 30,000
43 Excavation and backfill: 9300 yd., earth at $5 per yd., $46,500 2300 yd., rock at $13 per yd., $29,900	76,400
44. Erecting 660 towers averaging $125 each	82,500
45. Stringing conductors at $200 per mile	20,000
46. Stringing ground wire at $50 per mile	5,000
47. Handling insulators and hardware, $110 per mile	11,000
48. Repairing and clearing up, $60 per mile	6,000
49. Total labor cost	$ 230,900
50. Insurance, 0.9 percent. on item 49	$ 2,078
51. Total labor and insurance	232,978
52. Total material and labor (items 41 and 51)	$1,328,692
53. Total items 25 and 52	1,628,692
54. Superintendence, engineering, and contingencies, 12 percent. item 53	195,443
55. Total of items 53 and 54	1,824,135
56. Contractor's profit, 10 percent. of item 55	182,413
57. Total of items 55 and 56	$2,006,548
58. Interest until operation begins at 4.5 percent	90,294
59. Total of items 57 and 58	2,090,842
60. Total cost per mile	$ 20,968
or approximately	$ 21,000

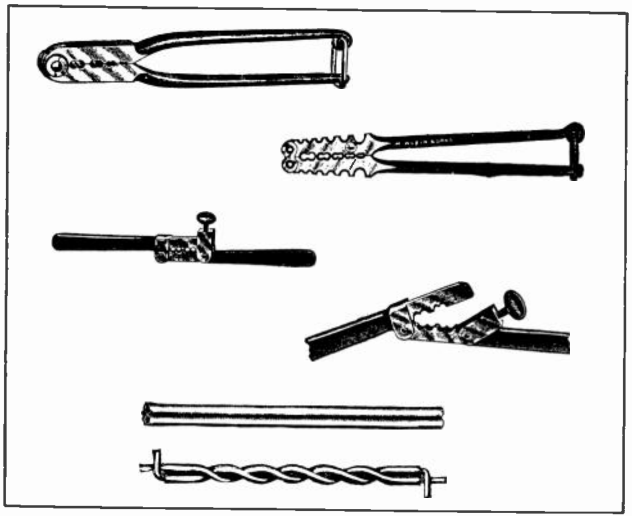

Fig. 361 Above are shown several styles of lineman's splicing clamps, and also a splicing sleeve and completed splice.

364. LINE ERECTION

The poles or towers of an entire line, or a considerable section of it, are generally erected complete before running or pulling up any conductors. The conductors are then reeled off and laid out along the line. This can be done either by mounting the reels on stationary iron bars or pipe shafts and pulling the conductors off the reels and along the line; or by fastening the conductor ends and moving the reels along the line on a truck or wagon, allowing the conductors to unwind as the reels are moved.

The latter method is generally best, as it does not drag or slide the conductors along the ground and run the danger of scratching or nicking them on sharp stones. Small reels can often be carried on a bar by two men.

The wire or cable lengths are next spliced together into complete line conductors. The splices are commonly made with splicing sleeves as previously explained.

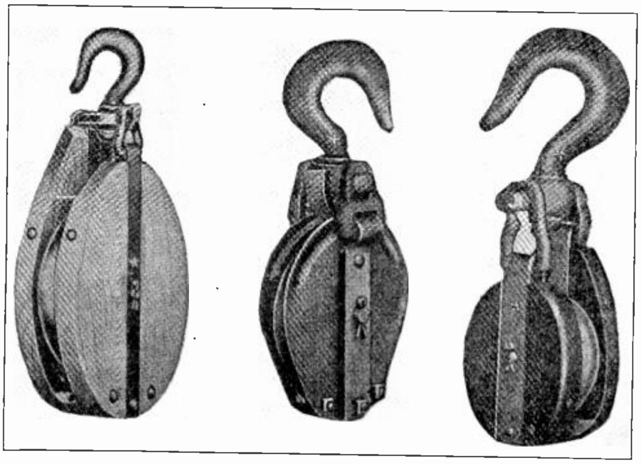

Fig. 362. Several types of snatch blocks or pulleys used for stringing line conductors.

Fig. 361 shows several styles of linemen's splicing clamps, a twin splicing sleeve, and a completed sleeve splice.

After placing the conductor ends in the splicing sleeves, they are twisted by means of a pair of splicing clamps, which are placed one on each end of the splice and then rotated in opposite directions.

As the conductors are run along the line they are pulled up and laid on top of the cross arms by linemen using a light rope called a **hand-line.**

After the conductors are up on the cross arms they are next pulled up to the proper tension and sag by securely tying or anchoring them at one end and pulling on the other end with a block and line or with a truck or tractor.

Conductors can be allowed to slide over wooden cross arms as they are pulled up, but they should not be slid over steel cross arms on account of the danger of scratching the conductors on the sharp corners of the metal.

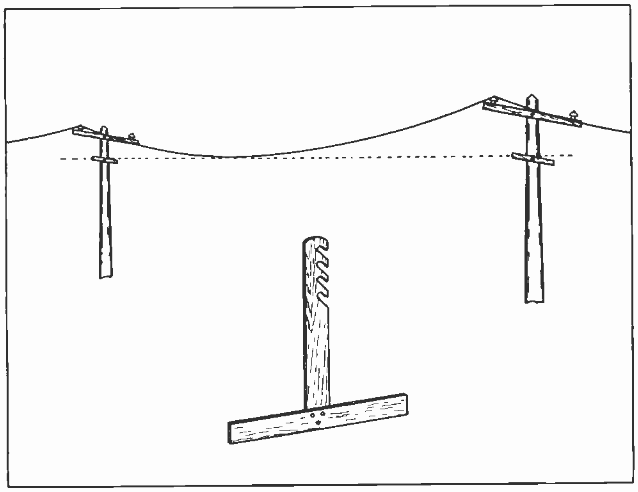

Fig. 363. The above sketch illustrates the method of sighting conductor sag and also shows a convenient form of sagging tee which can easily be made from pieces of wood.

Conductors on steel tower lines are generally hung from the cross arms in **snatch-blocks** or special pulleys, as shown in Fig. 362.

These pulleys have openings in the side of their hangers to allow the conductors to be laid in them, and the pulleys allow the conductors to slide freely, thus keeping the sag and tension even as the wires are pulled up.

When pulled up over wooden cross arms, conductors should be given from 15 to 30 minutes on short pulls and up to several hours on long pulls, to allow them to creep or slowly slip over the arms and equalize the sag and tension on the different spans before the conductors are fastened to the insulators.

365. "SAGGING TEES" AND "PULLING GRIPS"

The proper amount of sag can be determined by sighting over marks which are placed just the right distance beneath the cross arms on two adjacent poles or towers. Small straight sticks can be nailed on the poles for this purpose. The lineman by sighting over these markers along a line, as shown by the dotted line in Fig. 363, can tell when the conductor is properly sagged, as the lower point of the conductor should just come in his sight over the markers.

Convenient sighting tees, or **sagging tees** (T's), can be made as shown in the lower view in Fig. 362, by nailing two thin wood strips together at right angles, and notching the vertical piece so it can be hung from the conductor at the poles from which the lineman is sighting.

The T's can be made with a number of properly spaced notches in the vertical handle for various amounts of sags.

In pulling up line conductors and in anchoring them at any desired points, special grips or clamps, often called **come-alongs**, are used. Several of these are shown in Fig. 364.

These devices consist of a pair of gripping jaws, operating lever, and pulling eye. The pulling rope or cable is attached to the eye, and the harder the pull the tighter the jaws grip the conductor, because the pulling eye is attached to the operating lever.

Some transmission line poles are equipped with iron steps or bolts driven into the wood, and others have bolt heads projecting a short distance from the wood so that metal steps can be hooked onto them.

366. CLIMBERS AND SAFETY BELTS

In the majority of cases, however, a lineman climbs the poles by means of spurs or climbers strapped to his legs and feet.

A lineman can with practice learn to rapidly climb poles by firmly and easily pressing his climber spurs into the pole and going up a step at a time, using both hands to grip the pole as he climbs.

The spurs should not be jabbed into the wood, or they will be hard to pull out. **The knees should be held well out from the pole when climbing** in order to keep the spurs biting into the wood.

Hugging the pole with your knees will cause the climber spurs to break out of the wood and slip.

When a lineman reaches the position where he wishes to work on a pole, a strong leather safety strap is placed around the pole and carefully and securely snapped into the rings on a heavy tool-belt worn around his waist. Then, while still keeping the hands on the pole, lean back into the belt, testing its fastenings finally before releasing the grip on the pole.

The spurs can then be set in the pole at the proper point to place the body in a comfortable angle and position, and you are free to work with both hands.

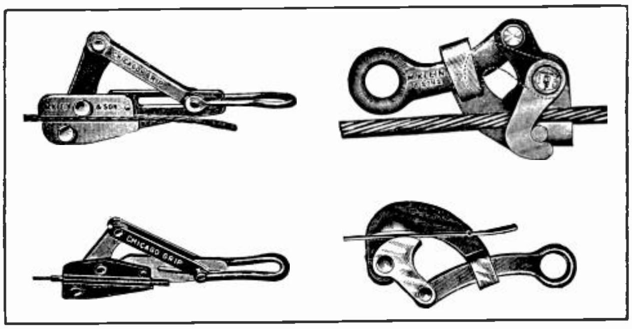

Fig. 364. Several different types of "come alongs" or pulling grips used for drawing up conductors or transmission lines.

Even when working on cross arms it is best to have your safety strap around the pole to prevent a bad fall in case of a slip.

Safety straps and belts should be given frequent inspection and testing, and the best of care, as a lineman's life depends on their being in good condition.

It is a good plan to frequently test the strength of the belt and strap by placing the spurs in a

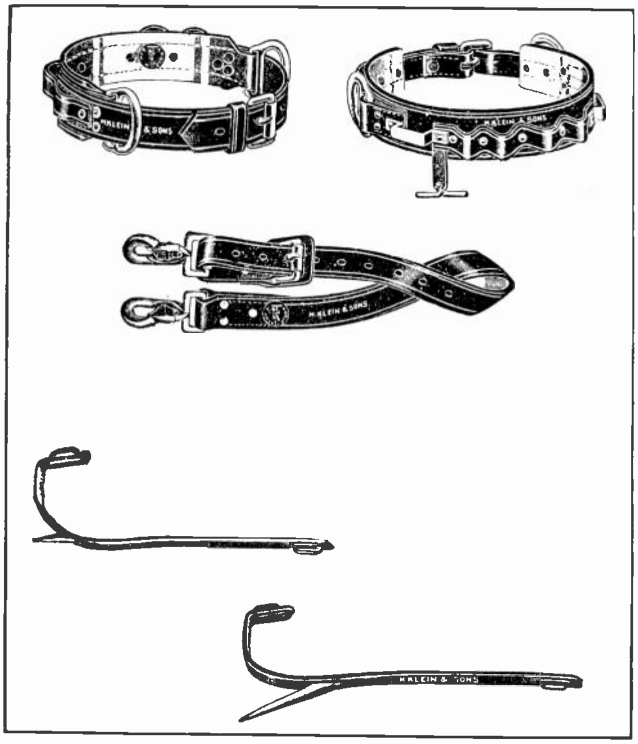

Fig. 365. Above are shown two views of a lineman's safety belt, a safety strap, and two types of climber spurs.

pole a few inches from the ground, and then leaning back hard into the belt. In case it does break a fall from this height is not very dangerous.

Fig. 365 shows two types of tool belts and a safety strap above, and two types of climbers without their leg straps are shown below.

When descending a pole the climber spurs need not be pulled out of the wood, but should be merely broken out by swinging the knee outward to release the spur.

Linemen should always be very careful in placing their spurs not to puncture insulation on conductors or injure fellow linemen working below them.

367. SAFETY-GROUNDING DEAD LINES BEFORE WORKING ON THEM

It is often necessary to make repairs or changes in transmission lines after they are erected. Whenever possible this work is done with the line dead or disconnected from the power plant, as the work can be done much more safely and much faster in this manner.

Before starting to work on any line that has been disconnected and is supposed to be dead, all of the line conductors should be thoroughly grounded at the point where the work is to be done. This grounding can be accomplished by throwing a dry rope or hand-line over the conductors and then using this line to pull up a bare flexible copper cable over the line conductors. One end of this cable should be well grounded to the tower or to a ground rod before drawing the other end over the line. The hand-line should be securely tied to the pole or a stake or weight to hold the ground conductor in place.

Great care should be used to see that the ground cable is held securely against all line conductors even using, if necessary, extra hand-lines to hold it against certain wires, as shown in Fig. 366.

Shorting and grounding the line conductors in this manner discharges any static energy that may be stored in the line, and also protects the lineman in case the line should become accidentally alive while he is working on it.

Ground chains were formerly used for this purpose, but as the contacts between chain links are often poor, rusty, and of high resistance, stranded copper cable is much safer and better.

Grounding cables are often provided with clamps which can be attached to the line conductors by means of a "hot stick" or wood pole with special metal hooks and fittings on one end.

368. "HOT" LINE WORK AND PROTECTIVE EQUIPMENT

In certain cases it is inadvisable to "kill" a line for minor repairs or changes, because of the interruption this would cause in the customer's service. In such cases linemen are sometimes required to work on "hot" or live lines. This is quite often done on distribution lines of 2300 to 6600 volts, and occasionally on lines of much higher voltage.

On distribution lines of around 2300 to 4000 volts hot line work can be performed by linemen wearing rubber gloves to provide insulation for their hands. These rubber gloves should always be protected from wear and mechanical damage or puncture by sharp wire ends or tools, by wearing leather gloves over them.

Rubber gloves should also be frequently tested by filling them with water, immersing them up to the wrist in water, and applying 10,000 volts to the water inside and outside the gloves to see if they will puncture or leak current.

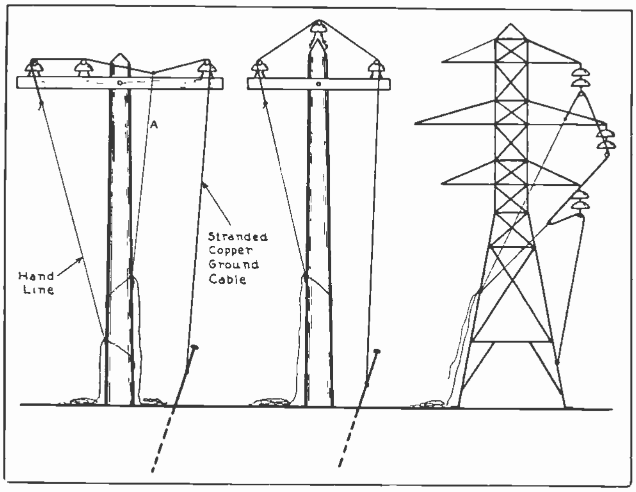

Fig. 366. The above sketches show methods of placing a ground wire over line conductors, to make a secure contact and safe ground on all conductors for the protection of linemen working on them.

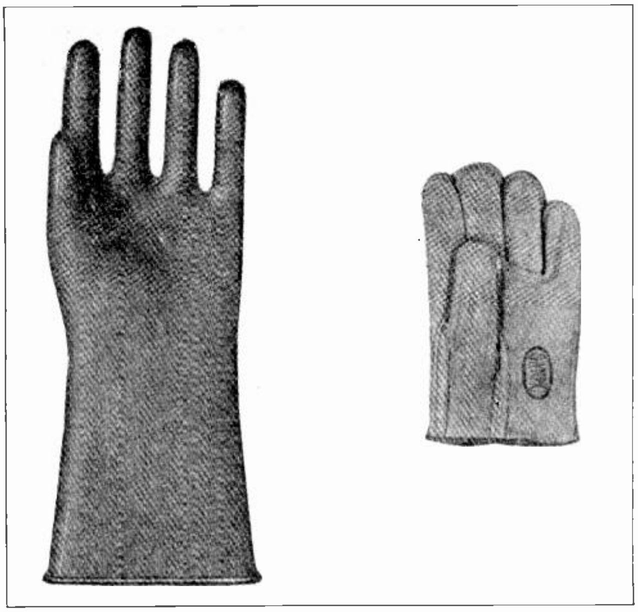

Fig. 367. On the left is shown a lineman's rubber glove and on the right a soft leather protector glove to prevent mechanical injury or puncture of the rubber insulating glove.

Fig. 367 shows a lineman's rubber glove on the left and a leather "pull over" glove on the right.

In addition to rubber gloves, rubber blankets and rubber protectors in the form of split tubes or hose are also used to protect linemen from accidental contact with wires on which they are not working.

These rubber protectors are split along their lower sides to allow them to be easily slipped over the line conductors. Some of them are also provided with enlarged sections to fit over pin-type insulators and conductors at the same time. Protectors of this type are often called "pigs".

Fig. 368 shows a number of protectors or pigs in use to protect two linemen working on a pole which carries several lines.

Fig. 368. This photograph shows the use of rubber line hose or "pigs" to protect linemen when working on live transmission or distribution lines. Photo Courtesy Lineman Protector Company.

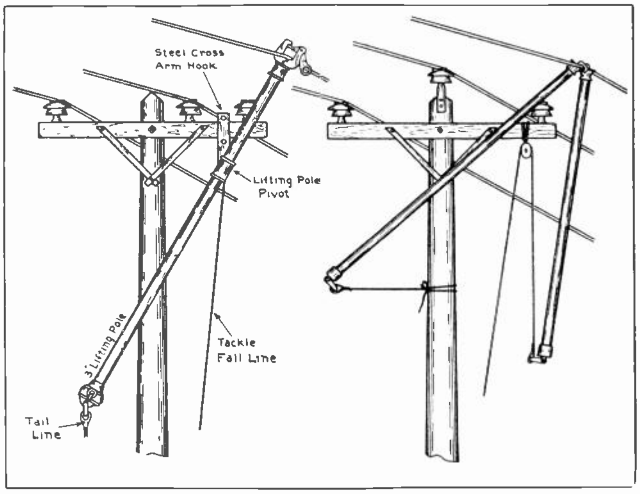

Fig. 369. The above diagrams show the use of live line tools to move live high-voltage conductors safely out of the way for replacing insulators or making other repairs. Courtesy Johnson Mfg. Co.

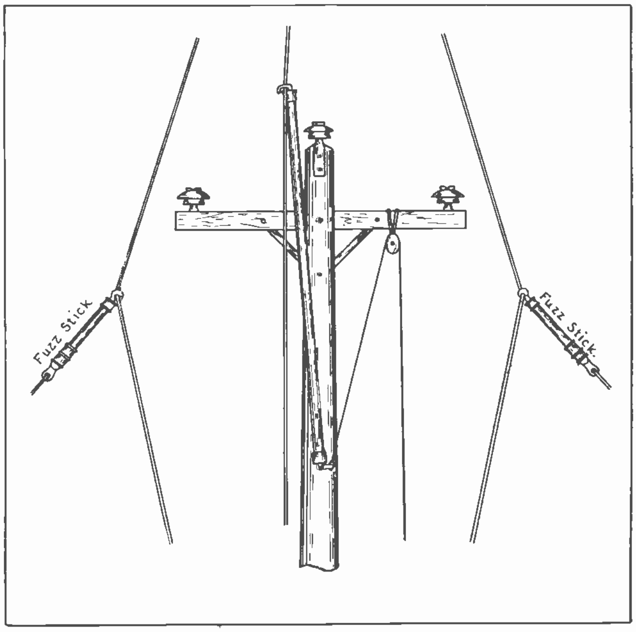

Fig. 370. This view shows the method of using a live line tool known as a "jew claw" to raise the center conductor; and two other tools known as "fuzz sticks" to draw aside the outer conductors and thereby allow a lineman to work safely on any of the three insulators on the pole and cross arm. Courtesy Johnson Mfg. Co.

369. "HOT" LINE TOOLS

A number of special tools and devices are available for use when working on hot lines. These devices consist of special connection clamps, jumpers, pulling clamps, etc., which can be attached to the live conductors by means of the wood sticks previously mentioned.

Other wood sticks with hooks and clamps are used to hold live conductors safely out of the way while a lineman replaces insulators or makes other repairs on line poles or towers. Two of the most commonly used of these devices are the **lifting pole** and **fuzz stick.**

Lifting poles consist of a varnished or oiled wood pole ranging from 3 to 12 feet long and from 2 to 3 inches in diameter, according to the size and voltage of the conductors to be handled.

These sticks are equipped with a conductor-holding clamp on the top end, an eye for the hand line at the bottom end, and a pivot for supporting them on a cross-arm hook. One or more of these poles can be used for holding conductors out to the side or up above the line insulators while the lineman is working upon them.

On the left in Fig. 369 is shown a lifting pole in use to hold one line conductor above and to one side of the insulator from which it has been removed. Note the steel cross-arm hook which holds the weight of the conductor and lifting pole, and also note the hand line or tail line which is attached to the clevis or eye at the bottom of the lifting pole and holds the pole at the proper angle and position.

The sketch on the right in Fig. 369 shows another method of supporting a line conductor away from the insulator and cross arm, by means of two poles, a pulley, and two tail lines. The poles used in this manner are often called **Jew Claws.** Their hooks are placed over the conductor and then screwed down tight by twisting the pole handle.

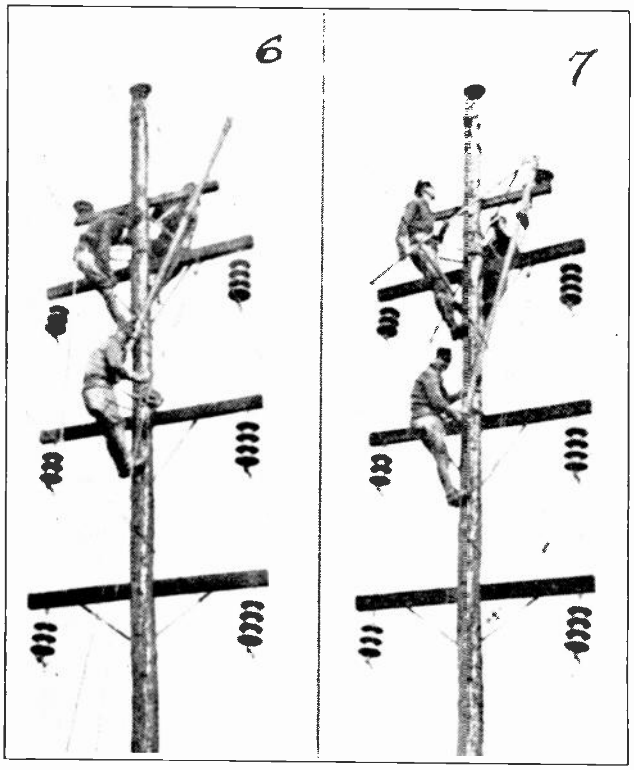

Fig. 371. The above two photos show linemen at work on a "hot" or live line, replacing insulators by means of live line tools. This work requires extreme care and accuracy and is generally done by specially trained line crews. Courtesy Johnson Mfg. Co.

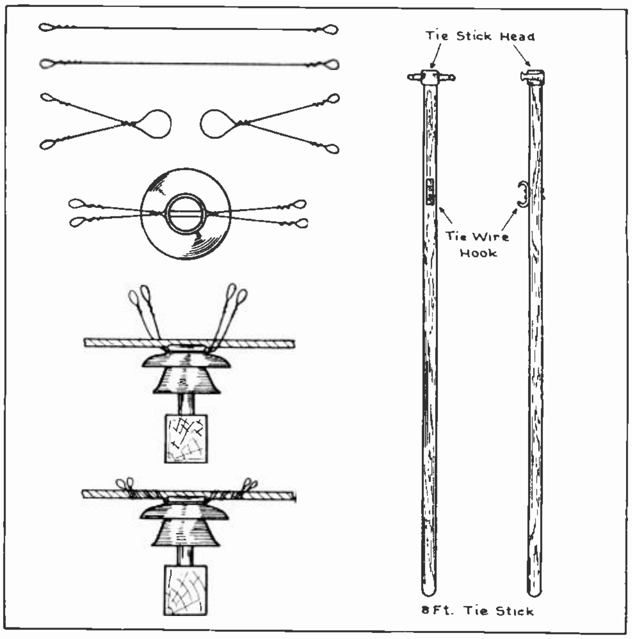

Fig. 372. The above sketches illustrate the steps and method of making a line tie by means of looped tie wires and the tie sticks shown on the right. Courtesy Johnson Mfg. Co.

Fig. 370 shows one lifting pole and two fuzz sticks in use for holding all three conductors of a line away from the insulators and cross arm and to allow a lineman to work freely and safely on any of the insulators. These hot-line tools can be used in a great variety of ways for performing various operations on live lines.

The two photographs in Fig. 371 show a group of three linemen changing a pin-type insulator on a pole which carries several high-voltage lines. Note that the linemen are all wearing gloves; are keeping their bodies well away from other line conductors; and are handling the conductor which is being worked upon entirely by means of the wood handled tools.

By means of these hot-line tools with insulating handles, conductors can be disconnected from either pin or suspension-type insulators; conductor ties on pin-type insulators can be either removed or remade; and it is even possible to make actual splices in line conductors without ever touching them with the hands.

Fig. 372 shows several of the steps in making a tie on a pin-type insulator. Note that the ends of the tie wires are prepared with small loops, so that they can be wrapped around the insulator cap and also around the conductor by means of the wood handled tie-stick shown on the right.

Hot-line work should only be done by men who are specially trained for this work, and power companies generally have special hot-line crews who are specially drilled in the use of correct hot-line tools and on safety precautions and rules for this work.

LIGHTNING ARRESTERS AND LINE PROTECTION

As transmission lines are made of metal and are good conductors of electricity, and also because they are elevated considerably above the ground, they are quite subject to lightning strokes and disturbances.

When a direct stroke of lightning hits a transmission line the tendency of this high-voltage energy charge is to flow along the line to some point where it can most easily discharge from the line to ground.

Ordinarily one of the easiest paths to ground would be through the windings of grounded electrical machinery connected to the line. Therefore, unless something is done to prevent lightning surges from flowing into connected electrical equipment, the excessive voltage of the lightning surges will very often puncture the insulation of transformers, generators, etc.

In some cases high-voltage lightning surges also tend to flash over the insulators to the grounded towers or wet wooden poles and thus take a more direct path to ground, instead of flowing over a long section of the line to reach grounded equipment.

In addition to direct lightning strokes, transmission lines often receive very heavy induced surges which are set up in the conductors by induction from nearby lightning discharges. These local discharges may occur from cloud to cloud above the line or from a cloud to earth near the line.

Other high-voltage surges and disturbances are often set up in transmission lines by switching operations in which loads of considerable value are suddenly cut off or on to the line. The sudden change in current throughout the length of a long transmission line when a considerable portion of its load is cut off will cause rather high voltages of self-induction in the line.

Transmission lines and their connected electrical equipment can be protected to quite an extent from flash-over of the line insulators and from puncturing of the insulation on machine windings by using lightning arresters and other protective devices.

Among the devices commonly used for this purpose are **horn** and **sphere gaps, choke coils, lightning arresters, overhead ground wires, arcing rings and horns,** etc. Each of these devices will be explained separately in the following paragraphs.

370. HORN AND SPHERE GAPS

Horn gaps and sphere gaps are often used to provide an easier path for high-voltage surges to escape from the line to ground by jumping these gaps instead of flashing over line insulators or puncturing machinery insulation.

Fig. 373-A shows a single-line diagram of a transmission line with a horn gap connected to the line near the transformer at the left end.

Fig. 373-B shows another line using a sphere gap instead of a horn-type gap.

One side of each of these gaps is connected directly to the line, while the other side is connected to ground. By properly adjusting the spacing distance between the two horns or spheres of such gaps they can be set so that any voltage above the normal line operating-voltage will jump across the gaps and discharge to ground before it will jump across the line insulators or through the insulation of the transformer windings.

Horn gaps derive their name from the shape of the electrodes or horns between which the arc is drawn in case of a discharge from a line to ground.

After the high-voltage lightning or switching surge has established an arc across one of these gaps there is a tendency for power energy to continue to flow from the line to ground.

Horn gaps tend to prevent this and quickly extinguish the arc as soon as the abnormal voltage has discharged from the line. The arc naturally

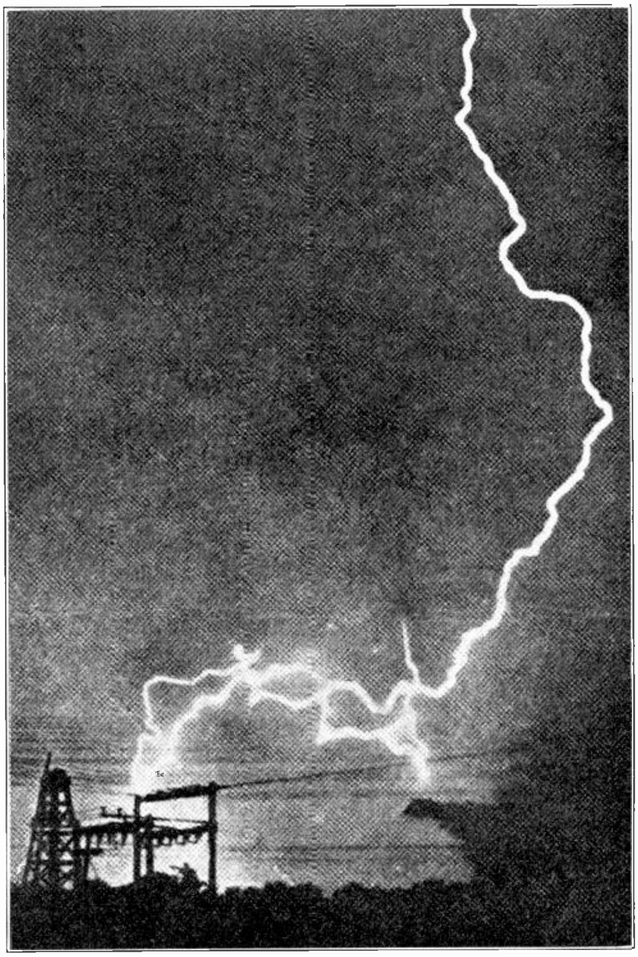

Fig. 372-A. This photograph shows a very severe lightning flash of the type which often cause disturbances on transmission lines, and in some cases cause flashovers of insulators and momentary grounding of the line energy.

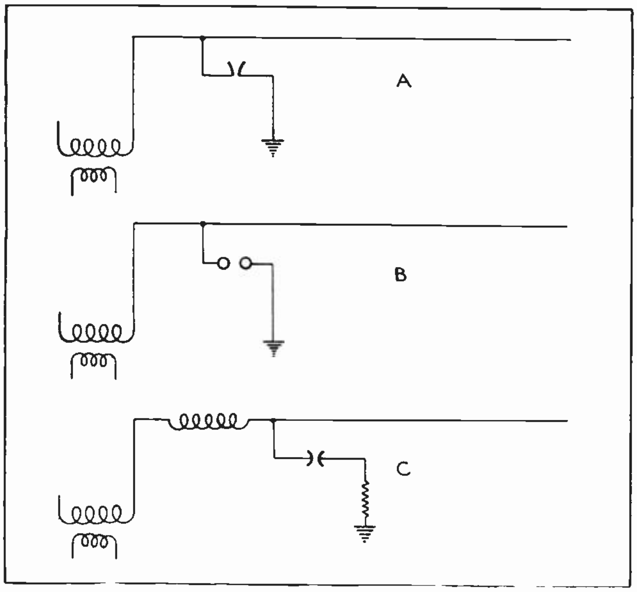

Fig. 373. The above sketches show horn, sphere, and hemisphere gaps, connected to line conductors to ground lightning or high-voltage surges. The lower sketch also shows a choke coil between the line and the transformer windings.

forms at the bottom of the horns where they are closest together, but the heat of the arc causes an upward circulation of air which drives the arc quickly toward the top of the horns where they are much wider apart, and therefore stretch the arc out to such a length that it is extinguished.

So we find that these gaps act as a sort of safety valve to allow high-voltage surges to escape from the line and then to quickly shut off or stop any flow of power current which would otherwise tend to follow the high-voltage discharge to ground.

For proper operation horn gaps should be mounted so that they are level and with the horns projecting upward in a vertical position. Care should be used to see that the gap is adjusted for the proper voltage and flash-over value, and also to see that the horns are not bent out of shape.

Sphere gaps or hemisphere gaps are often used in parallel with horn gaps or in connection with other forms of lightning arresters. Gaps of this type have a much greater discharge rate and capacity than horn or needle gaps do, because of the greater surface area of the spheres. So, where lines or arresters are subject to very heavy current surges, sphere gaps are often used.

While it requires a higher voltage to jump across a sphere gap than to jump a needle or horn gap of the same distance, the sphere gap discharges more quickly when its breakdown voltage is reached. This is a very important feature, because it is necessary to relieve a transmission line of any high voltage surge as quickly as possible and before this surge has time to do damage to other equipment on the line.

In the design of lightning arrester equipment and various types of gaps, time periods as short as one micro-second (one-millionth part of a second) or less are frequently considered.

Fig. 374 shows a table in which the sparking distances of needle gaps and sphere gaps are given for different voltages. From this table you will note that it takes approximately 20,000 volts to jump a gap of one inch between needle points, while between spheres of approximately 2½ inch diameter 20,000 volts will jump only about ⅓ of an inch.

The larger the spheres—or, in other words, the more blunt the surfaces of the gaps—the higher the voltage which will be required to jump any given distance.

You will also note that, while it requires 20,000 volts to jump a one-inch gap between needle points, 40,000 volts will jump a little more than two inches, and so on up. The higher the voltage goes, the less voltage it requires per inch to flash the gap.

SPARKING DISTANCES OF VARIOUS GAPS
Barometer 760 mm. Temperature 25° C.

VOLTAGE	DISTANCE IN INCHES				
	Very Sharp Needle Points	2.46 Inch Spheres	4.92 Inch Spheres	9.84 Inch Spheres	19.69 Inch Spheres
1,000	.06				
2,000	.13				
3,000	.16				
4,000	.22				
5,000	.23				
10,000	.47	.17			
15,000	.73				
20,000	1.00	.34			
25,000	1.30				
30,000	1.63	.55	.55		
35,000	2.00				
40,000	2.45	.75	.75		
50,000	3.55	.98	.95		
100,000	9.60		2.17	2.00	2.00
200,000				4.84	4.17
300,000				9.09	6.73
400,000					10.12

Fig. 374. The above table gives the distance which various voltages will flash through air between different types of gaps.

371. CHOKE COILS

Choke coils consisting of 10 to 20 turns of solid wire large enough to carry the line current are commonly used in series with transmission lines and in connection with lightning arresters. The purpose of these choke coils is to set up considerable reactance to the high-voltage, high-frequency lightning surges.

Tests have indicated that lightning and other line disturbances set up brief surges which are not only of very high voltage but are also of rather high frequency.

We have already learned that a coil of a certain inductance will offer a great deal more impedance in a high-frequency circuit than in one of low frequency. For this reason choke coils are connected in series with the transmission line and at a point between the lightning arrester connection and the transformers or other station equipment, as shown in Fig. 373-C.

These devices are connected in this manner so that the choke coil will tend to block or stop any high-frequency, high-voltage surges, prevent them from reaching the windings of transformers or other devices, and cause these surges to take the non-inductive path through the gaps and lightning arrester to ground.

Small choke coils made of stiff solid copper wire and in cylindrical form are generally self-supporting, but large coils are often made with a number of wood slats or strips running through them lengthwise and bolted to the turns in order to make the coils more rigid and keep them in better shape. If it were not for this bracing, heavy current surges would tend to distort the choke coils from their natural shape by the heavy magnetic stresses set up between the turns during such surges.

Choke coils are sometimes made with the center turns smaller in diameter than those on each end, in order to give them greater stiffness and enable them to be self-supporting. Coils of this type are frequently called hour-glass type choke coils.

Fig. 375 shows a choke coil of 200 amperes current capacity and insulated for 15,000 volts.

Some recent experiments and tests made with choke coils seem to indicate that they have very little beneficial effect in stopping high-voltage, high-frequency line surges and that lightning arresters are almost as effective without choke coils as with them.

However, at the time of this writing this point has not been conclusively proven and numerous choke coils will undoubtedly still be installed. There are also in service many thousands of these devices which will probably remain in use for many years to come.

372. LIGHTNING ARRESTERS

There are in use a number of different types of lightning arresters; but the general purpose of all types is the same, namely to discharge or drain from the lines any surges of excessively high voltage, and then to immediately interrupt and stop the flow of power current which tends to follow the lightning discharge through the arrester.

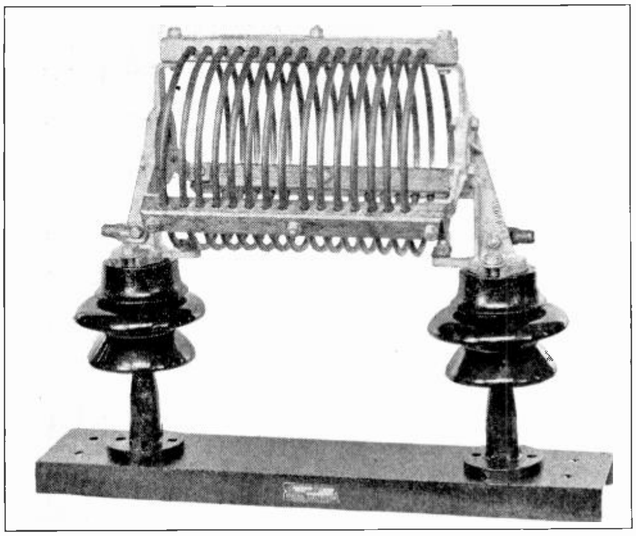

Fig. 375. This photo shows a 200-ampere choke coil insulated for 15,000 volts. Choke coils of this type are used in connection with lightning arresters as explained in the accompanying paragraphs. Courtesy G. E. Company.

Some of the most common types of lightning arresters in use are the **horn gap** and **resistance** type, **graded-shunt resistance** type, **auto valve, series gap** type, **oxide film** type, and **electrolytic** or **aluminum cell** type.

The first two arresters mentioned are generally used on lines of the lower voltages, ranging up to about 15,000 volts. The auto valve and oxide film arresters are made for use with lines of practically any voltage by placing more or less of their small units in series. Electrolytic or aluminum cell arresters are not very often installed any more, but there are many thousands of these units in use on various lines throughout the country.

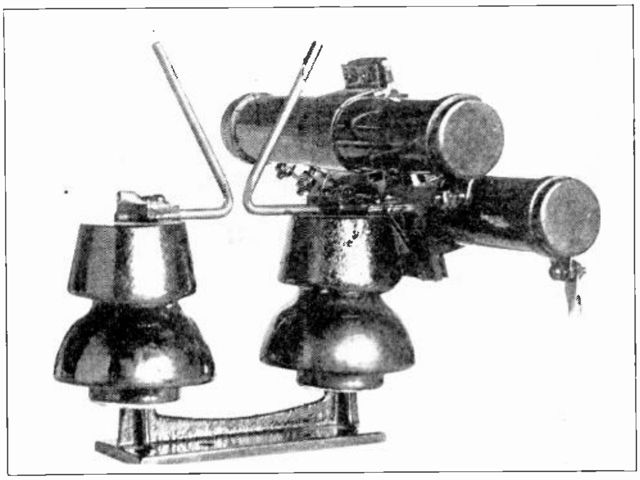

Fig. 376. Small horn gap type lightning arresters and resistance units which are connected in series with the gap and the ground. Courtesy G. E. Company.

Fig. 376 shows a simple horn-gap arrester with two tube-like resistance units which are connected in series with the gap and the ground terminal. While the resistance units do not prevent the high-voltage lightning surges from discharging through them to ground, they do tend to limit the flow of power current at normal line-voltage and thereby help to extinguish the arc after the lightning or switching surge has been discharged.

373. GRADED SHUNT ARRESTERS

Arresters of this type consist of an insulating base or panel upon which are mounted a certain number of small metal alloy cylinders, arranged to provide a number of gaps in series according to the voltage of the line on which the arrester is to be used.

These discharge gaps between the round surfaces of the cylinders are shunted or bridged by two or more non-inductive high-resistance units, as shown in the diagram in Fig. 377. Low or moderate frequency surges of high voltage will flow through the higher resistance "B" and then through the three gaps in series at the lower end of the unit and to ground. Surges of somewhat higher frequency will discharge through the lower resistance "A" and the six series gaps to ground.

Surges of extremely high frequency will discharge directly across all of the gaps in series, because the slight capacity effect of the surfaces of the metal cylinders and the entire lack of inductance in this path makes it the easiest one for the high-frequency surges to follow.

The large number of gaps in series keeps the arc broken up into a number of small arcs, thus making it easy to extinguish at the zero point of the alternation of the line current.

The alloy of which the round metal knobs or cylinders are made is also of a nature that doesn't readily maintain an arc between their surfaces. Arresters of this type are generally used only on small power lines operating at voltages under 15,000.

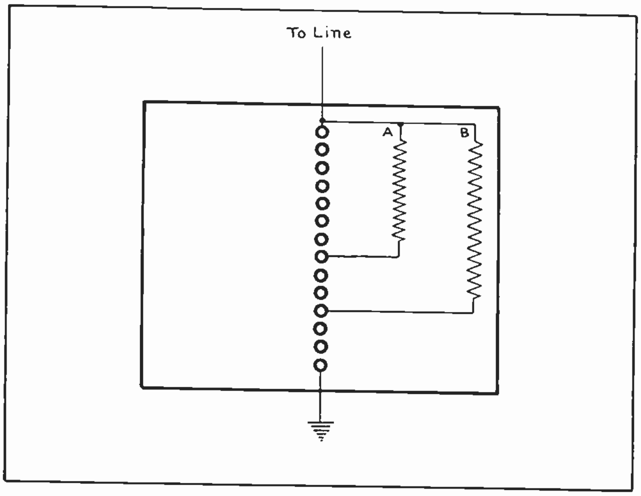

Fig. 377. The above sketches show the arrangement and connection of parts for a simple series-gap graded-shunt lightning arrester.

374. AUTO VALVE ARRESTERS

Auto-valve lightning arresters are manufactured by the Westinghouse Electric & Manufacturing Company and are very extensively used on transmission lines of all voltages. These devices get their name from the automatic valve action by which they allow the discharge of a high-voltage surge and then immediately shut off the flow of power current afterward.

Auto valve arresters consist primarily of a series or stack of thin carbon-composition disks which are spaced just a few thousandths of an inch apart by thin mica rings or washers, as shown in the sketch in Fig. 378.

An assembly of this type provides both the resistance of the composition disks and the resistance of the small series gaps between the disks. This unit with its resistance is then connected in series with a spark gap and to the line wire and ground. By using the proper number of disks in series and a properly adjusted spark gap, the arresters can be made suitable for different line voltages.

They are usually made and adjusted so that normal line voltages or small surges which are only a few percent. above the line voltage will not cause any flow of current to cross the spark gap or through the disk gaps; but as soon as a surge occurs which is considerably greater than line voltage, it will break down the resistance of the air in the spark gap and that in the gaps between the composition disks and allow the surge energy to discharge to ground.

Fig. 379 shows a sectional view of a small auto valve arrester for operation on 7500-volt lines. The stack of disks is mounted within a porcelain casing and the small hemisphere-shaped spark gap can be seen in the top of the unit, and a ground connection is shown leading from the bottom. The entire unit is provided with a clamp or mounting bracket for convenient mounting on cross arms or poles.

375. OPERATION

The mica washers are slightly larger in outside diameter than the carbon disks are, as can be noted in Fig. 378, and this projecting edge of the mica prevents discharges from taking place at the edges or corners of the carbon disks.

The inner opening of the mica ring or washer is nearly as large as the diameter of the carbon disks, so that it leaves the greater part of their surface area exposed for the arc to take place between them. When a discharge occurs through an arrester of this type the very short arcs between disks are widely and evenly spread out in a sort of brush or spark discharge all over the surface of the carbon disks.

An arc of this type is very easy to extinguish as soon as the excessive voltage has been reduced by discharging to earth. So, for this reason, the auto valve arrester has become a very popular type and is extensively used on both low-voltage distribution lines and higher voltage transmission lines.

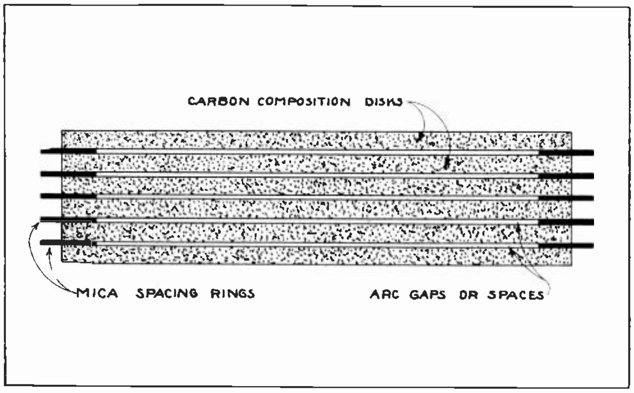

Fig. 378. This sketch shows the construction and arrangement of parts of an auto-valve lightning arrester. The discharge occurs in the short gaps between the composition disks which are separated by insulating rings.

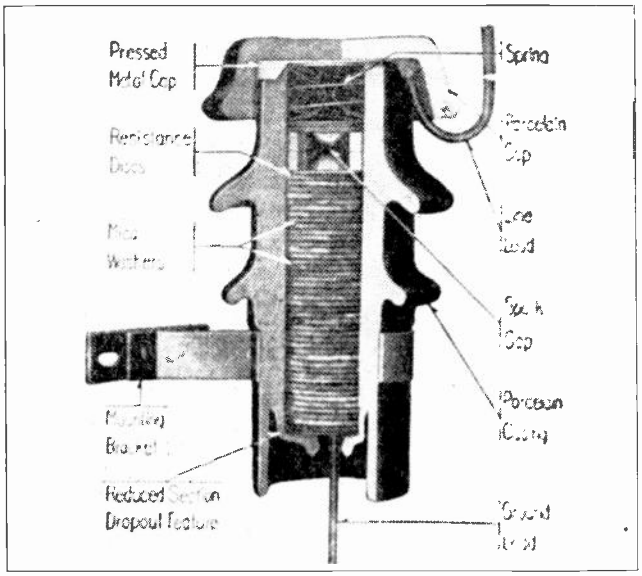

Fig. 379. Cut-away view of a small auto-valve lightning arrester for pole type mounting. Note the stack of disks and the small spark gap placed above them. Courtesy Westinghouse Electric & Mfg. Co.

By increasing the area of the disks of an auto valve arrester these devices can be made to handle very heavy discharges.

Fig. 380 shows a number of auto valve arresters for interior use and ranging in voltage from 3000 volts to 73,000 volts. Large outdoor arresters of this type are provided with metal skirts to protect them from rain and ice, and have a hooded sphere-gap connected in series with each unit or phase leg of the arrester.

One of these units or phase legs is connected to each line wire, as shown in the diagrams in Fig. 381. The view on the upper left in this figure shows both front and side views of a three-phase, pole-type installation on a 33,000-volt line. On the upper right is shown another 33,000-volt, three-phase installation with the arrester units mounted in the frame of a substation. The lower view shows a three-phase, 66,000-volt installation with the arresters mounted on a concrete foundation and the disconnect switches mounted on the steel framework of the substation. The strain insulators and choke coils can also be seen in this view.

The bottoms of all three arrester units are connected together and to ground in each case.

376. OXIDE FILM ARRESTERS

These arresters are manufactured by the General Electric Company and get their name from the valve action of lead peroxide powder packed between brass disks which are held separated a certain distance by an insulating porcelain ring, as shown in Fig. 382.

Fig. 383 shows one disk of an arrester of this type. A number of these disks can be stacked in series to provide the proper resistance and breakdown voltage for practically any line voltage. The breakdown voltage of each cell or unit is approximately 300 volts.

The surfaces of the metal plates are coated with an insulating varnish before the cells are assembled and filled with the lead peroxide powder.

When a lightning discharge takes place through an arrester of this type the current flows through the lead peroxide, which is of moderate resistance, and punctures the varnish film in small spots.

The heat developed by the current flow through the lead peroxide immediately changes some of this material to red lead and litharge, which is of very high resistance, and therefore tends to stop the flow of current and extinguish the arc. Some of this melted red lead and litharge also flows into the punctured spots on the film, thus renewing their insulating quality and dielectric strength.

As these cells have a rather large active area they can stand a great number of ordinary discharges or punctures before becoming inefficient and requiring replacement.

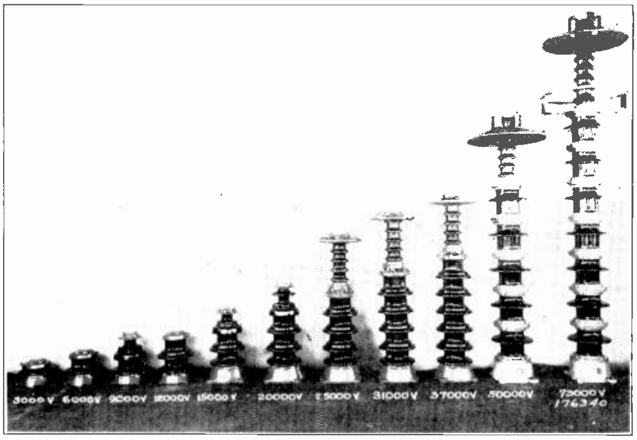

Fig. 380. This photo shows a number of single-phase auto-valve lightning arrester units for use on lines of different voltages.

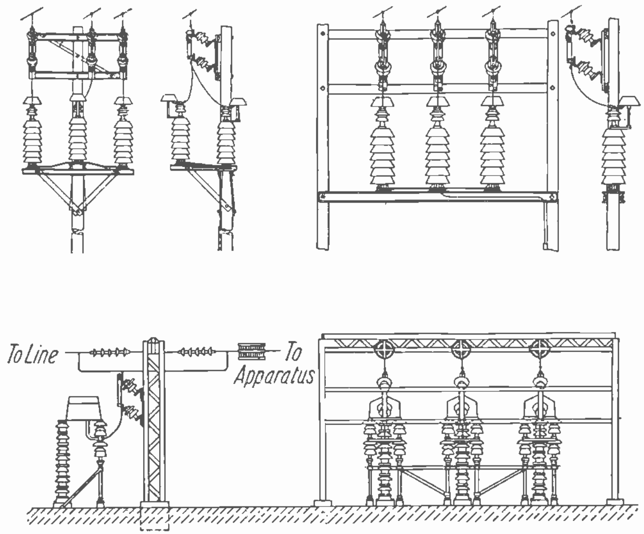

3-Phase, 66,000-Volt Arrester

Fig. 381. The above sketches show connections and arrangement of the phase units for three-phase lightning arresters. Note the manner of connection to the line conductors and to ground, and also note the disconnect switches used to break the circuit between the line and arrester units.

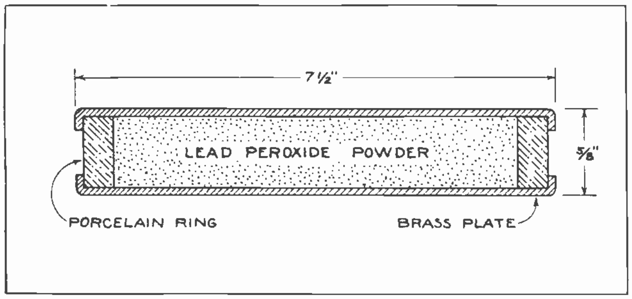

Fig. 382. This sketch shows the construction of one disk or unit of an oxide film lightning arrester.

Oxide film arresters for outdoor use on high-voltage lines are equipped with weather-protecting skirts and hooded sphere-gaps as shown in Fig. 384. This photo shows the three legs of a three-phase arrester for 25,000-volt service, and with one side of the skirts removed from the center leg so the oxide film disks can be clearly seen.

These arresters are connected to a three-phase line in the same manner as the auto valve type shown in Fig. 381. Smaller oxide film arresters for pole mounting are made in the form of insulating tubes filled with small pellets of lead peroxide that are coated with a litharge film.

The principle of these arresters is the same as that of the flat oxide film cell type, except that the discharge takes place through the high-resistance films on the surface of the lead peroxide pellets, instead of on the surface of the flat metal disks.

The high resistance sealing effect which shuts off the flow of power energy to ground after the lightning discharge takes place in these arresters, is the same as in the flat-cell type.

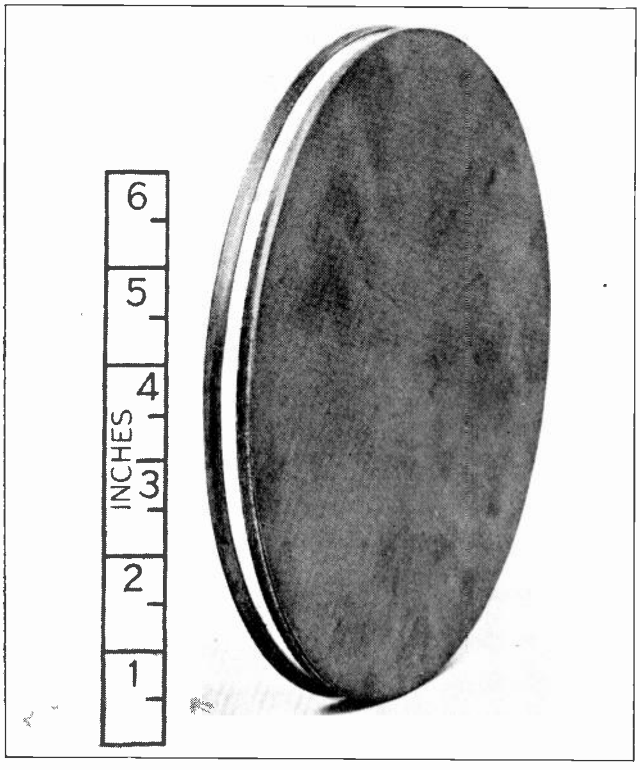

Fig. 383. Photograph showing the size and appearance of a single disk of an oxide film arrester unit. Courtesy General Electric Co.

Fig. 385 shows several of these pellet-type oxide film arresters, ranging from 3,000 to 15,000 volts.

377. ALUMINUM CELL ARRESTERS

Aluminum cell or electrolytic arresters are in use on transmission lines of practically all voltages from 10,000 to 220,000 volts. Arresters of this type possess the advantage of having a very large discharge capacity and of being readily adaptable to practically any present day voltage.

They have the disadvantage, however, of being subject to freezing when installed outdoors in cold climates.

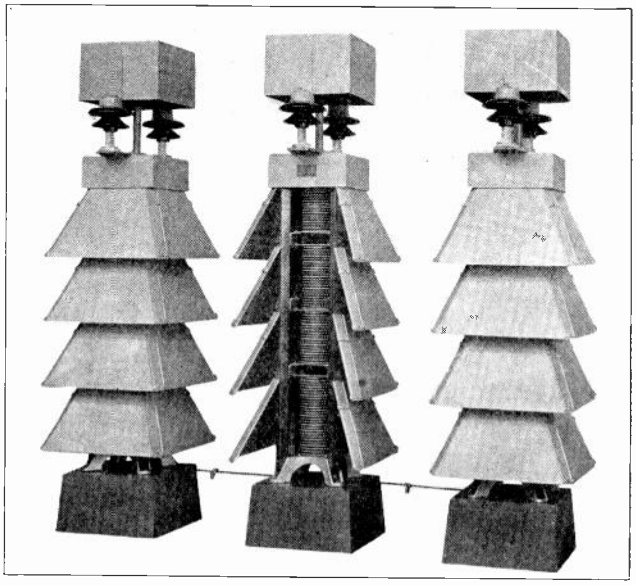

Fig. 384. This photo shows a complete three-phase lightning arrester of the oxide film type for outdoor use. Note how the disks are protected from the water by metal skirts and also note the metal housing which encloses the spark gap at the top. Courtesy G. E. Company.

Aluminum cell arresters are made up of a stack of aluminum cones which are placed point downward one within the other, and separated or spaced from .3 to .4 inches apart by means of small insulating buttons. The sketch in Fig. 386 shows a sectional view of an arrester of this type.

The spaces between these cones are then filled with an electrolyte solution of ammonium phosphate, and the whole assembly is immersed in a tank of insulating oil. As the electrolyte is heavier than the oil it will remain in place between the cones and will not mix with the oil. The oil insulates the cone stack from the arrester tank and also prevents discharges from taking place between the edges of the cones.

Arresters of this type are generally installed with horn gaps in series between their top lead or connection and the line. The lower cone is grounded to the tank and the tank in turn is grounded to earth.

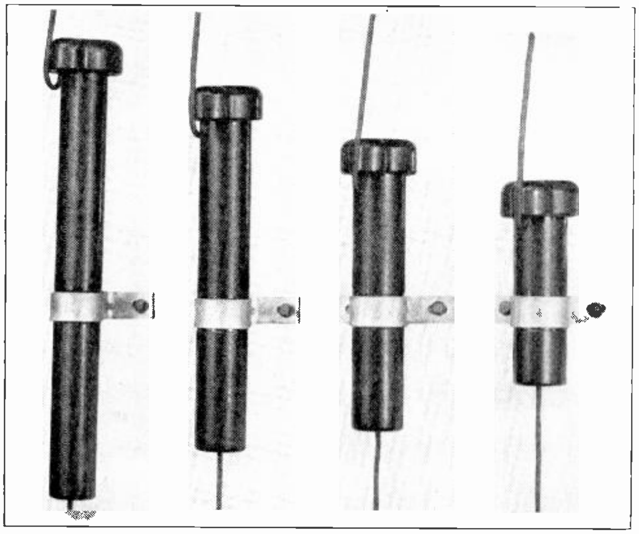

Fig. 385. A number of pellet type oxide film arresters for pole mounting on lines of 3000 to 15,000 volts. Courtesy G. E. Company.

378. CHARGING ALUMINUM CELL ARRESTERS

Before placing aluminum cell arresters in service they must be charged several times by shorting out the horn gap and connecting them directly to the line. This allows a small amount of current to flow through the resistance of the arrester cells and the flow of current forms a very high-resistance film of aluminum hydroxide. It is this film that builds up the proper resistance of the arrester unit.

During the first charge of a new arrester unit the current flow may be very heavy and for this reason they are sometimes charged on lower voltages than that of the line on which they are to be operated. In other cases, a fuse or auxiliary resistance is placed in series during this charging process, to prevent an excessive flow of current.

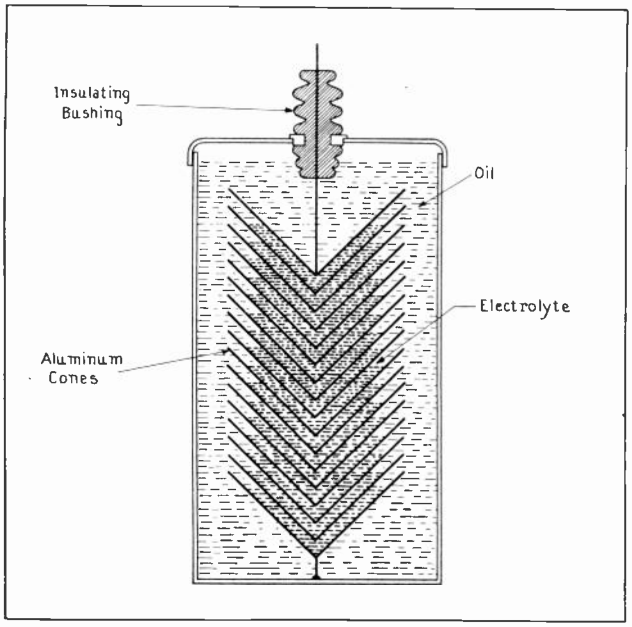

Fig. 386. The above sketch shows the construction and arrangement of parts of an electrolytic or aluminum cell arrester. Note the electrolyte between the aluminum cones and also the insulating oil surrounding them.

After an aluminum cell arrester has been in normal operation it should be charged daily to maintain the high-resistance film on the surface of the aluminum cones.

During these charging operations the current flow will be approximately one-half ampere through each leg or stack of the arrester.

In a properly charged aluminum cell arrester each cone will withstand a pressure of about 300 to 325 volts, so an arrester unit with a stack of 200 cones is suitable for a 60,000-volt line.

If a lightning surge or switching surge causes the line voltage to rise much above this value, a discharge will take place across the horn gap and down through the series of cones and the electrolyte between them. This flow of current tends to build up a still higher resistance film of the oxide on the surface of the aluminum cones, and thereby shuts off or stops the flow of power current to ground immediately after the lightning surge has been discharged.

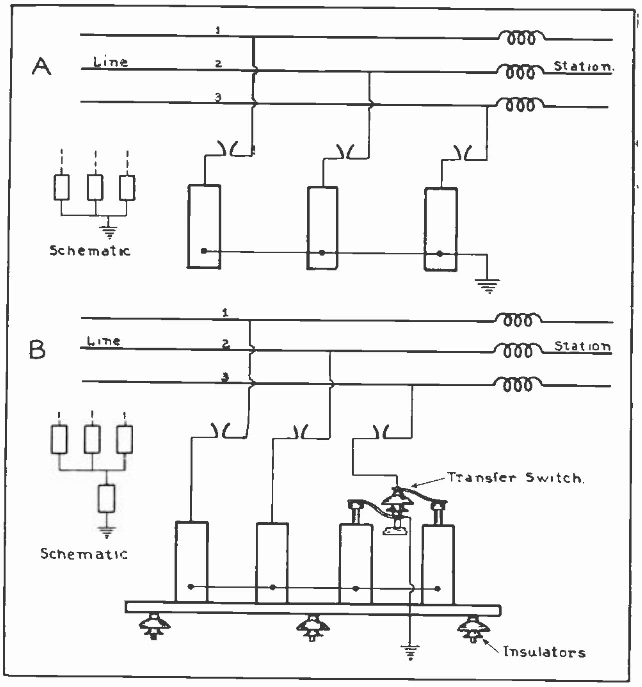

Fig. 387. "A" shows the proper connection of electrolytic arresters on a star-connected, three-phase line. "D". Connections for electrolytic arresters on an ungrounded delta-connected line.

For convenience in charging aluminum cell arresters they usually have one horn of each pair arranged so that it can be moved or rotated by means of a lever or wheel mounted within reach of the operator and well insulated from the horns by a wooden operating shaft.

When the movable horns are rotated a small auxiliary spur or horn which is attached to each one is brought into contact with the stationary horn, thus shorting the gap and connecting the arrester directly to the line. Holding the horns in this position for a period of approximately five seconds will usually charge the arrester sufficiently for another twenty-four hour period.

The horns are then swung back to normal position, breaking the arc from the spur to the stationary horn as they are moved back.

In charging arresters which have four units and a transfer switch as in Fig. 387-B, the charging should be done in two short intervals, between which the transfer switch should be changed in order to properly charge both units 3 and 4.

For example, the daily charging procedure should be: To first charge the arrester for a few seconds before changing the transfer switch, then shift this switch and again charge the arrester a few seconds. This completes the operation for that day.

The fact that aluminum cell arresters require this daily charging is one of their disadvantages. Oxide film and auto valve arresters do not require any attention of this kind and are therefore becoming much more generally used than the aluminum-cell type.

379. CONNECTIONS OF ALUMINUM CELL ARRESTERS

Fig. 387-A shows a diagram of the connections for a three-phase aluminum cell arrester on a line which is connected star with a grounded neutral at the transformers.

You will recall that on lines connected in this manner the voltage from any phase to ground is only 57.7 per cent of the voltage between phases. With the connections shown, arrester units having sufficient resistance to prevent a discharge from any line wire to ground will also be sufficient to prevent a discharge from one phase to the other.

You will note by tracing the circuit that current in order to flow from any phase wire to another would have to pass through two arrester units and horn gaps in series.

Fig. 387-B shows the connections for a three-phase arrester used with an ungrounded delta-connected line. In this case the voltage from any phase to ground is the same as the voltage between phases; so a fourth or extra cell stack is used to provide two arrester units in series from any phase to ground, as well as two in series between any two phases.

Note that in this installation the arrester tanks are all connected together but are insulated from the ground, so a discharge passing from any one of the line wires must pass through two arrester units to reach ground.

For example, a discharge from line wire No. 1 would pass through the horn gap and No. 1 arrester unit; then up through No. 3 unit and to ground. A discharge from line 2 would flow through its horn gap, down through arrester unit No. 2 and

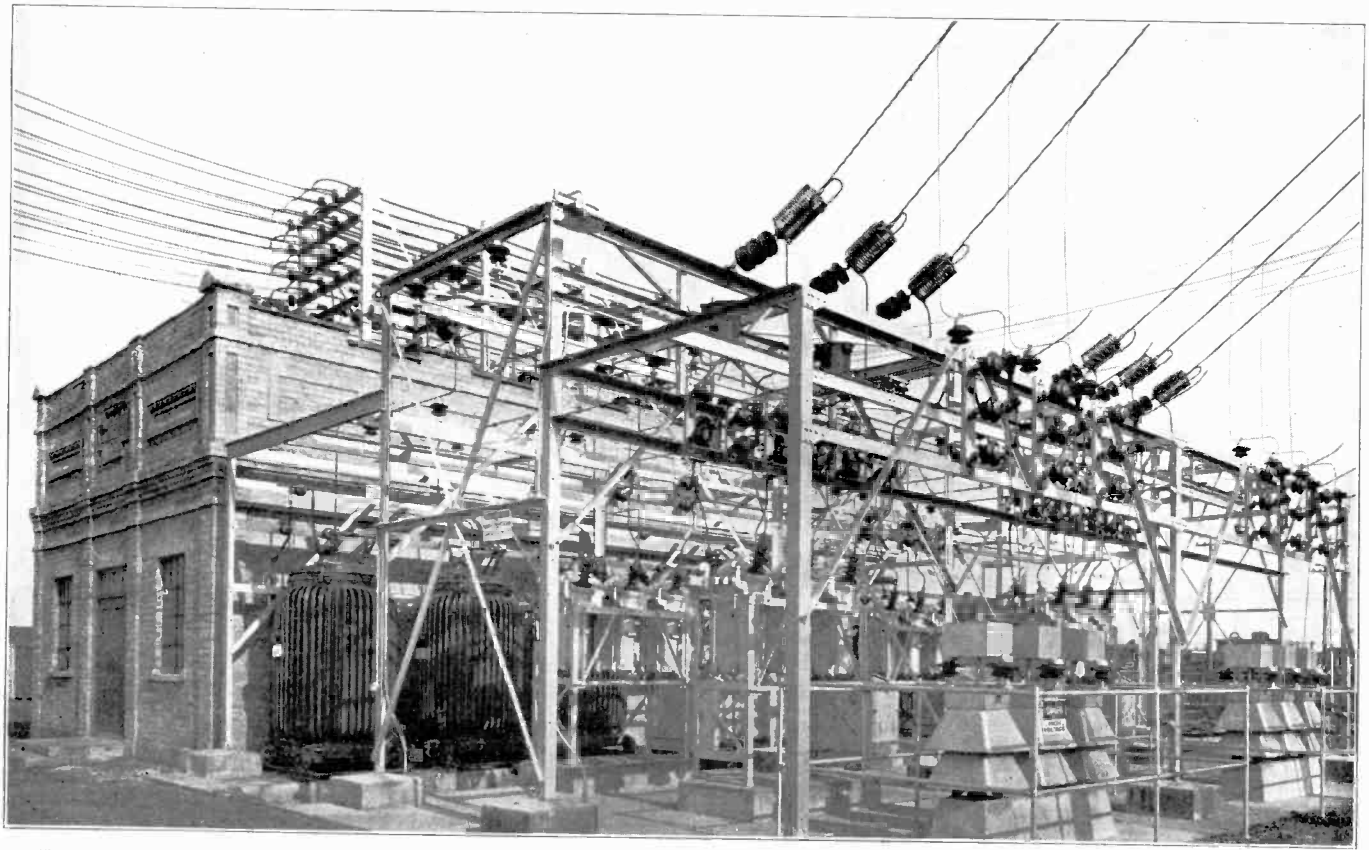

Fig. 388. This photo shows an excellent view of a substation with two sets of three-phase lightning arresters in the foreground, and their choke coils and disconnect switches directly above them. Also note the oil switches and step-down transformers in the background. Courtesy G. E. Company.

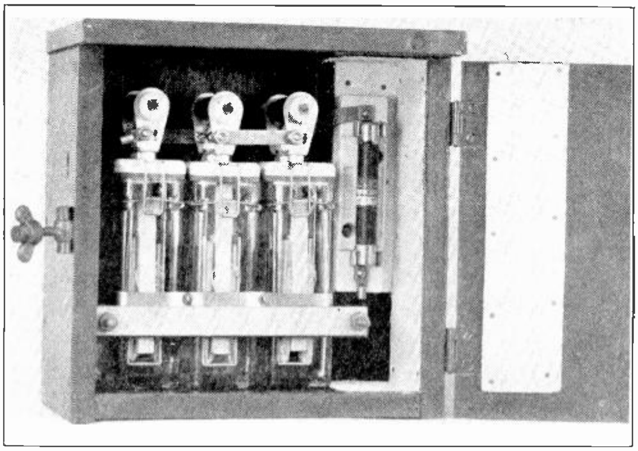

Fig. 389. Small electrolytic arrester for use on low-voltage D.C. circuits. Courtesy G. E. Company.

up through No. 3 to ground. A discharge from line wire 3 would flow down through its horn gap unit 4; then up through 3 and to ground.

Note that arrester units 3 and 4 are provided with a transfer switch which consists of curved copper blades or arms mounted on a large insulator which separates them from each other and which can be rotated by means of a hand wheel. This allows units 3 and 4 to be interchanged, so that first one and then the other can be used as the auxiliary or fourth leg, thus occasionally reversing the direction of discharge flow through them.

Fig. 388 is an excellent view of a substation in which the lightning arresters and choke coils for two three-phase lines can be clearly seen in the right foreground. Note the disconnect switches above the arresters. These switches can be used to disconnect the arrester units from the line for making repairs or adjustments.

Fig. 389 shows a small aluminum cell arrester for use on D. C. trolleys or lines of 500 to 750 volts.

When installing any kind of lightning arresters they should be thoroughly grounded with heavy copper wire leading to a ground rod, for small arresters; and copper cable leading to large buried ground plates or cables for large substation arresters. These ground connections should be frequently inspected to see that they are secure and in good condition, and the resistance of the ground system at power plants or substations should occasionally be tested to be sure it is low enough to freely carry heavy discharges.

Lightning arresters should always have separate grounds from those used for other equipment at a substation.

380. OVERHEAD GROUND WIRES

Ground wires are often run above the line conductors on transmission lines, to protect them from lightning discharges.

These wires are also called "earth wires" and "lightning wires". They are usually made of galvanized steel and are from ½ to ⅝" in diameter. They are not insulated, but are mounted directly on steel tops of towers or on small steel masts attached to tower or pole tops. Either one or two ground wires can be used.

On tower lines the lightning wires are grounded at each tower by their contact with its frame. On pole lines the lightning or earth wires should be grounded at least every 500 feet, by a wire or cable running down a pole to a ground rod.

As lightning tends to strike the earth or grounded objects at their highest or nearest points to the charged clouds, the ground wire above the line conductors tends to take all lightning discharges and prevent them from reaching the line conductors.

In order to be most effective a ground wire should be high enough above the line wires to protect an area as wide as the conductors are spaced apart.

Fig. 390 shows how the proper height for ground wires can be determined. They should be high enough above the line conductors so that the angle X between the dotted lines, will not be less than 45 degrees, and preferably not less than 50 degrees.

Several of the photos of transmission lines in this section show ground wires in position on top of the towers.

381. GUARD RINGS AND HORNS

Lightning surges will often cause a discharge from the line to the cross arm of steel towers, in the form of a flash-over at insulator strings.

If such a discharge is heavy a power arc will usually follow and may be maintained for short periods lasting from a few cycles to several seconds. Such arcs often clear themselves by being extinguished by an air draft during the zero voltage period of an alternation.

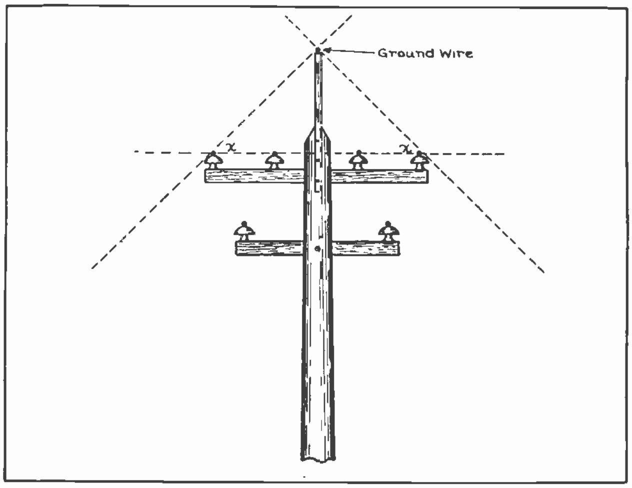

Fig. 390. The above diagram shows how to determine the proper position of a ground wire with respect to the position of the line conductors. Examine this figure carefully while reading the accompanying explanation.

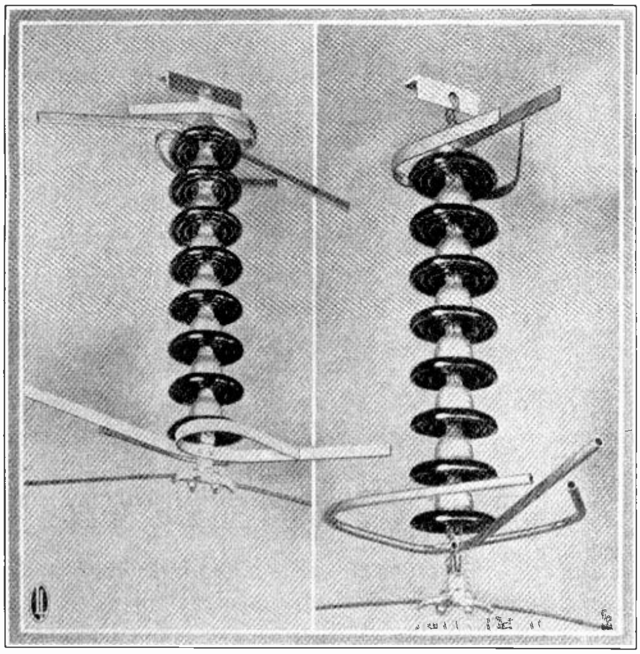

Fig. 391. The above photos show two types of arcing horns used to prevent damage to suspension insulator strings in case of flashover. Courtesy Lapp Insulator Co., Inc.

In other cases it may require the opening of a circuit breaker at the power plant to clear the arc.

The heat of a flashover arc is so intense that if it lasts more than a fraction of a second it is likely to seriously burn the line conductor or crack some of the insulator units.

In any case the arc if allowed to cling to or cascade over the surface of the insulators will blacken them and coat them with a deposit of burned metal so that this string will be subject to flashovers again.

To avoid these troubles many power lines have their insulator strings equipped with guard rings or arcing horns, or both.

The purpose of these devices is to cause any flashover arcs to be formed away from the surfaces of the insulator, and also to keep the arc ends from the line conductor and cross arm ends.

Fig. 311 shows a flashover on a string of insulators equipped with a simple arcing horn at their lower end. You will note that this horn prevents burning of the conductor and also holds the arc somewhat away from the lower insulator units. It is not long enough, however, to prevent the arc from striking the edges of the upper insulators.

Fig. 391 shows two types of special arcing tips or guards which are designed to keep any arcs well away from the insulator and conductors.

Fig. 392 shows an insulator string equipped with a ring at the bottom and horns at the top. Rings of the type shown in this photo are often called **grading shields,** as they tend to distribute the voltage stress more evenly over the insulator string and thereby prevent flashovers to a certain extent.

In case of a heavy surge and a flashover the arc is formed between the higher ends of the ring and the lowest tips of the horns, thus protecting both the line conductor and insulators quite effectively.

The table in Fig. 393 gives the arc-over values in kilovolts for several styles of insulators made by the Locke Insulator Corp. These values are obtained from actual tests made on the insulators both wet and dry, and the figures give a good idea of the number of insulators required in a string to obtain certain flashover values.

382. SURGE ABSORBERS

Another form of protective device for use on transmission lines is known as a **surge absorber** and consists of a choke coil surrounded by an iron tank which is grounded. The coil is insulated from the tank by oil and insulating bushings, and is connected in series with the line conductor.

These absorbers tend to block or stop line surges and reduce the voltage of such surges as they pass through the absorber.

The absorber tanks are usually made for horizontal mounting and they can be hung on poles or towers or in substation frameworks.

383. THYRITE ARRESTERS

A new material for lightning arresters has recently been developed by the General Electric Com-

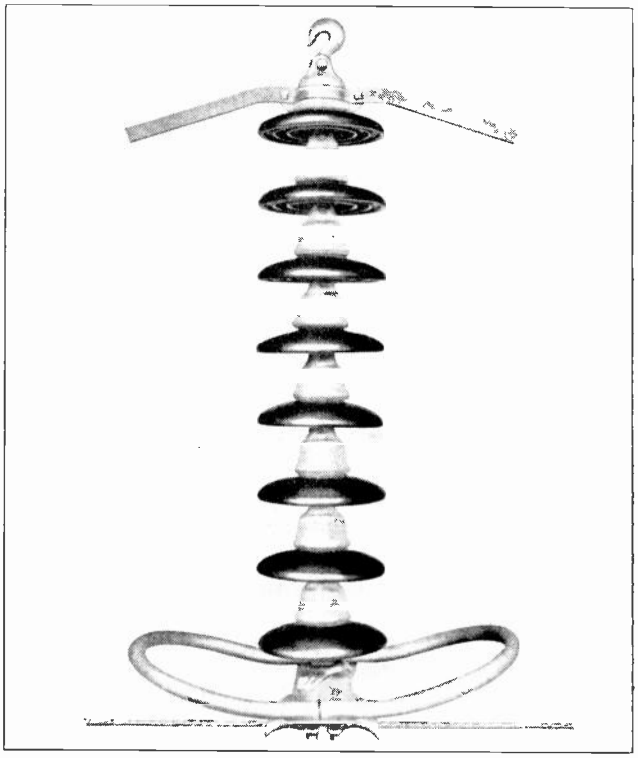

Fig. 392. String of suspension insulator units protected by a grading ring at the bottom and arcing horns at the top. This construction serves to protect the insulators from damage due to arcs and also to distribute the voltage stress more evenly over the insulator units in the string. Courtesy of Locke Insulator Corporation.

Arc-over Values

In the following tabulations, average values, in kilovolts, are given, as measured by *sphere gap*, in accordance with A. I. E. E. standards.

No. 8401

Number of Units	Dry	Wet
1	75	45
2	125	87
3	175	130
4	220	170
5	260	210
6	305	250
7	345	290
8	390	330
9	435	365
10	475	400
11	520	430
12	560	460
13	600	485
14	640	510

No. 18034

Number of Units	Dry	Wet
1	75	45
2	125	85
3	170	125
4	210	165
5	250	205
6	290	245
7	330	285
8	370	315
9	410	345
10	450	375
11	490	405
12	525	435
13	565	460
14	600	485

No. 7794-1

Number of Units	String No.	Dry	Wet
1	19101	75	45
2	19102	130	75
3	19103	182	110
4	19104	230	145
5	19105	277	180
6	19106	325	220
7	19107	373	255
8	19108	420	290
9	19109	467	320
10	19110	512	350
11	19111	557	380
12	19112	600	410
13	19113	645	440
14	19114	685	470

No. 9140

Number of Units	String No.	Dry	Wet
1	9601	75	45
2	9602	130	90
3	9603	185	135
4	9604	235	180
5	9605	280	225
6	9606	330	265
7	9607	380	305
8	9608	430	350
9	9609	475	395
10	9610	525	435
11	9611	570	470
12	9612	620	500
13	9613	660	530
14	9614	705	555

Fig. 393. The above table gives the voltages required to flash over various numbers of insulators of different types on tests made both wet and drv. Note: The voltages are stated in kv. or thousands of volts. Courtesy Locke Insulator Corporation.

pany and is called Thyrite. This material is somewhat like porcelain in its mechanical structure, but is has the peculiar property of being an insulator at certain voltages and a conductor at certain higher voltages.

A number of disks of this material can therefore be stacked in an arrester unit and as long as ordinary line voltage is applied practically no current will flow through it.

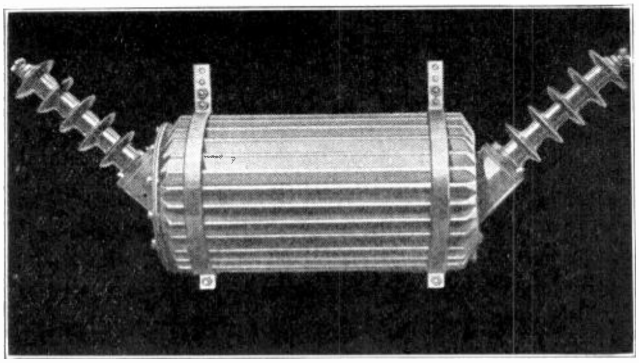

Fig. 393-A. This photo shows a surge absorber made by the Ferranti Company, Inc., and used to check and reduce high-voltage surges on transmission lines.

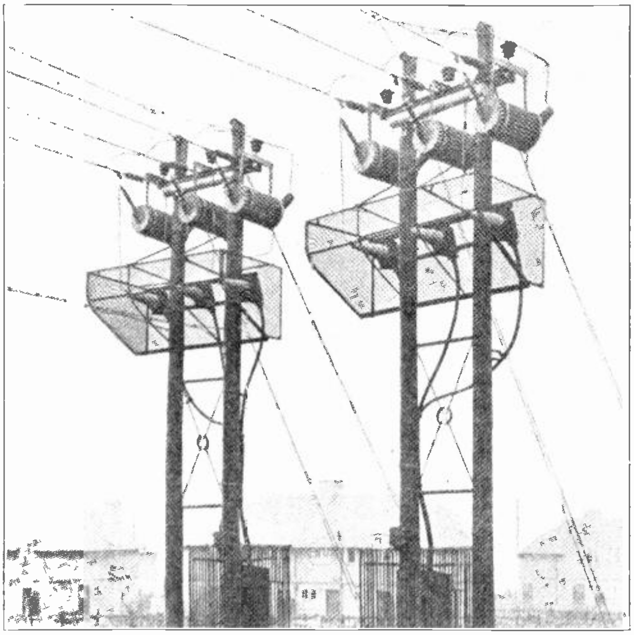

Fig. 393-B. Photograph of an actual installation of surge absorbers on two three-phase lines. Courtesy of Ferranti Company, Inc.

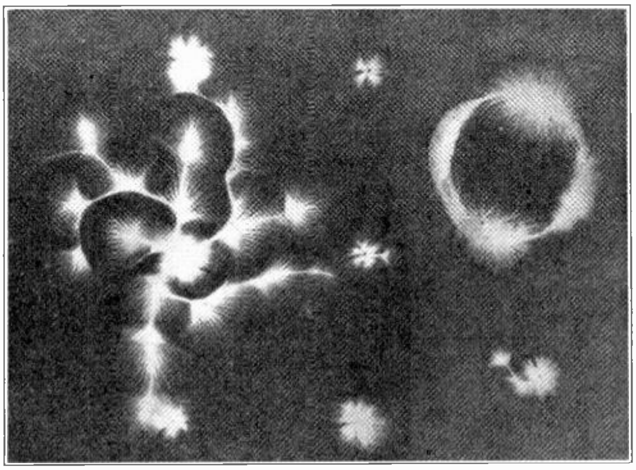

Fig. 393-C. This view shows a combination of several photographs of klydonograph records of lightning surges on transmission lines.

When excessive voltages of a considerably higher value are applied, quite a considerable current will flow through the Thyrite disks, thus relieving the line of the surge.

A great deal of testing and research work is constantly being done by power companies and electrical manufacturers, to devise better ways of protecting lines from lightning.

Interesting instruments and devices have been developed for recording the voltage values and indicating the nature and polarity of lightning surges.

One of these devices called a **Klydonograph** will actually photograph a small discharge from lines to which it is connected, and give a picture that indicates the voltage and polarity of the surge causing the discharge.

Special **lightning generators** consisting of high voltage transformers, rectifiers and condensers have been built and used to build up charges of 1,000,000 volts and more to make actual field tests of the effects of lightning on transmission lines.

Modern lightning arresters are very effective, and proper consideration should always be given to this important equipment when building or planning any transmission line.

In maintaining lines great care should be taken to see that all arresters and protective devices are kept in good condition, and properly grounded.

DISTRIBUTION LINES

Up to this point we have referred principally to transmission lines and the term "distribution line" has not been used to any great extent. In reality distribution lines are nothing but small transmission lines operating at lower voltages than long transmission lines do.

In general the term transmission line applies to those lines running from power plants to substations or from one power plant to another, and the term "distribution lines" refers to those which run from the substation out to the transformers on the poles or in the vaults near the customers' premises.

Most modern distribution systems operate at voltages ranging between 2300 and 5000, and the voltages are reduced from this value to that required by the customers' equipment by means of step down transformers. In some cases, however, we have secondary distribution systems which may branch out from low-voltage transformer secondaries to a number of homes or small buildings and carry energy at voltages ranging from 110 to 500.

In general it is best not to have lines at this low voltage running more than a few hundred feet, but in some cases the load demand of individual customers is so small that it is not practical to install a separate transformer for each customer.

384. TYPES OF DISTRIBUTION SYSTEMS

Distribution systems may be either of the overhead or underground type and may operate on either D. C. or A. C.; the great majority being supplied with alternating current. Some of these systems are either single-phase or three-phase, although there are still a few two-phase distribution systems in existence.

Three-phase, four-wire systems are very extensively used for distribution because of the two different voltages that are easily obtainable with this system.

Transformers supplying systems of this type have their secondaries connected star with the grounded neutral, and the fourth wire is run from this neutral connection as explained in the Section on Transformers.

With this connection, if the voltage between phases is 4000, then the voltage between any phase and the neutral wire will be slightly over 2300. Then by using step-down transformers with a ratio of 10:1 and split secondaries, the 2300 volts can be reduced at the customer's premises to 115 and 230 volts for Edison three-wire services or secondary distribution.

Using ordinary 2300-volt transformers with a 5:1 step-down ratio with primaries connected star to the 4000-volt wires and the secondaries connected delta will give 461 volts for the operation of 460-volt power equipment. With the usual amount of voltage drop in the service wires this provides approximately 440 volts at the terminals of the motors or power devices.

385. FEEDERS AND MAINS

Some distribution systems use an arrangement known as **feeders and mains,** such as shown in Fig. 394. The line running out from the source of supply to the various branch lines is known as the **feeder** and the branch lines from which the customers' connections are taken are known as **mains.**

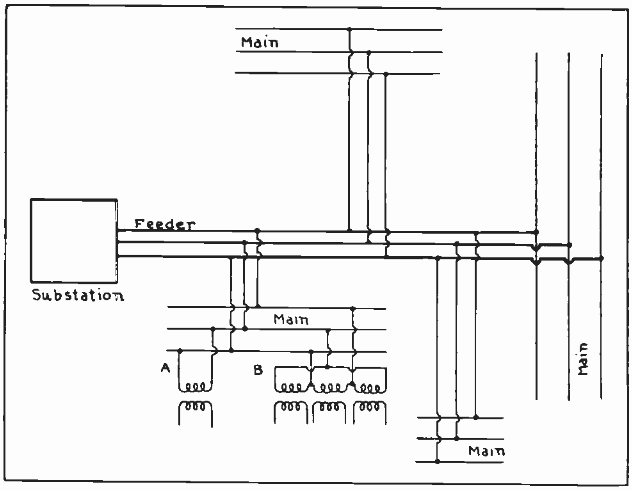

Fig. 394. Sketch showing arrangement of feeder and main distribution system.

At "A" and "B" are shown a single-phase and a three-phase service to customers. The number of customers connected to any main will depend upon the distance the customers are apart and the amount of load which each requires. This number may vary from one to several dozen or more.

Customers' connections are not shown on any of the mains except one in Fig. 394. This diagram shows a three-phase feeder and main system but

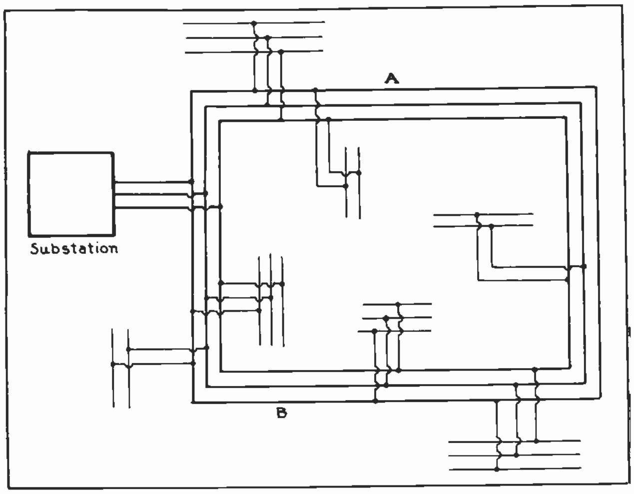

Fig. 395. This sketch illustrates the loop method of connection for distribution systems.

this same plan of connections can be applied to single-phase equally well.

In many distribution systems the loop connection, such as shown in Fig. 395, is used. In these systems either the feeders or the mains or both are arranged in a complete loop and this loop may be fed at one or more points.

In Fig. 395 the loop is fed from the substation at only one point. With a system of this type if some fault made it necessary to disconnect the line at "A" the customers on the main at the far end of the loop would still receive energy from the substation through the line on the other side at "B".

You will note that in Fig. 395 some of the mains connected to the feeder are for single-phase service only while the others are three-phase. In connecting single-phase mains to three-phase feeders they should be balanced as equally as possible on the three phases. The same thing applies when connecting customers' single-phase loads to three-phase mains, as shown in Fig. 396.

The transformers supplying single-phase mains, A, B, and C, each have their primaries connected to different phases of the three-phase feeder. The two banks of three-phase transformers supply the three-phase mains, D and E.

Care should also be taken to balance the loads on Edison three-wire systems. Fig. 397 shows a number of single-phase transformers with their primaries properly connected at "A" to balance the load on the three-phase, 2300-volt distribution line. The split secondaries of these transformers feed Edison three-wire lines from which the customers' service leads are taken.

Some of the customers have three-wire services shown at "C", while others have only two-wire service as at "D". The two-wire services are shown properly connected to balance the load on the Edison three-wire system and on the transformer secondaries.

At "B" is shown a connection to supply three-phase power to motors. Also observe this diagram carefully to distinguish between the three-phase circuits and the Edison three-wire circuits.

386. GROUNDED SYSTEMS

Some power companies prefer to use grounded distribution systems, while others prefer the ungrounded systems. Each type of system has different advantages and disadvantages.

With grounded systems there is very little chance of the high primary voltage causing danger or trouble on the secondary lines, because of the tendency of this high voltage to first come to ground in case of any faults and thus blow the primary fuses, due to the short-circuit formed in this manner. The short circuit must then be immediately located and cleared before again putting power on the line.

With ungrounded systems one ground doesn't necessitate cutting off the power, as motors will operate even with one of the line wires grounded. When the ground is noticed it can be located and then repaired at some later and more convenient time when the power can be shut off with the least inconvenience to customers. While this ungrounded system may often give somewhat more continuous service it possesses the disadvantage of greater danger from the high primary voltage connecting on the secondary in case of insulation failure in the transformers.

The neutral wire of three-phase, four-wire system is often grounded at other points as well as at the transformer, in order to provide the greater safety in having more than one ground so that in case of failure of one there is sure to be some other good low-resistance ground at all times.

The neutral wire of such systems is usually identified and kept in the same position on the cross arms so that it can be easily located when making transformer connections. The neutral wire of three-wire Edison mains or services should always be kept in the center between the two 220-volt wires.

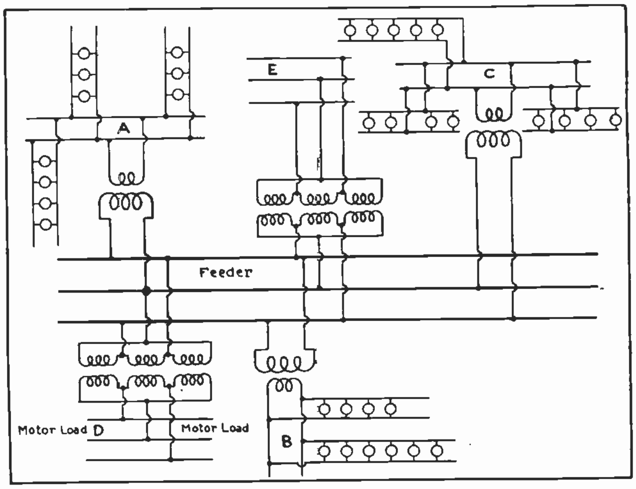

Fig. 396. Diagram showing method of balancing single phase customers' loads on three-phase distribution lines.

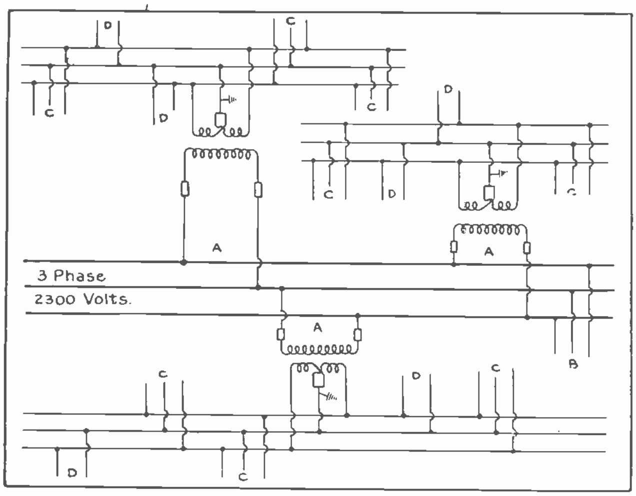

Fig. 397. Single-phase transformers with their primaries properly connected to balance the load on a three-phase distribution line, and their secondaries connected to supply three-wire Edison service to customers. At "B" is shown a connection for three-phase motor service directly from the distribution line.

This applies where the wires are run on cross arms, attached to strain insulators on buildings, and where they enter three-hole condulet covers.

387. GENERAL

In general most of the same things which have been covered in connection with transmission lines apply also to distribution lines. One principal exception to this is that most overhead distribution lines use insulated conductors, while those of transmission lines are practically always bare. There is, however, a growing tendency in many localities to use bare distribution conductors on wires of 2300 to 4000 volts or more, because it has been found that in many cases insulation several years old is not of much value on these outdoor conductors in case of other wires or conducting objects coming in contact with them.

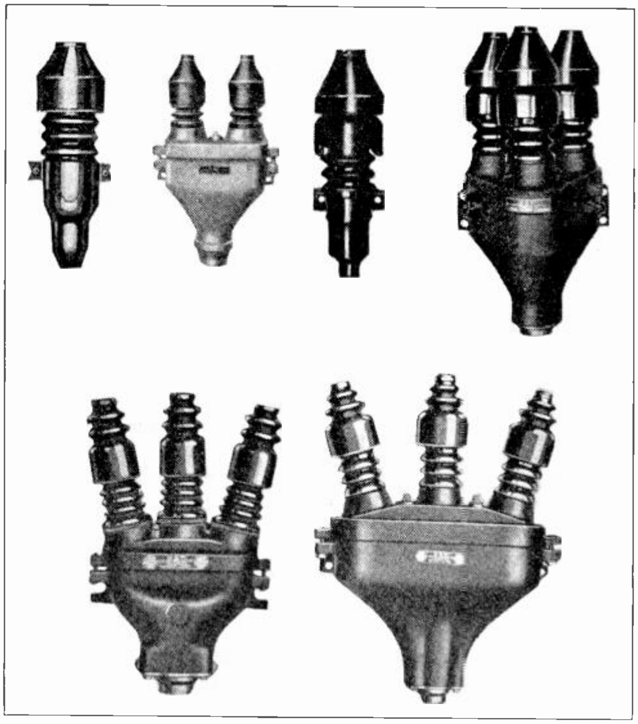

Fig. 398. Above are shown a number of different types of pot heads used for supporting and insulating high-voltage overhead conductors where they enter underground cables.

In many cases this aged insulation of somewhat questionable value is often depended upon too much by people working on or near distribution lines, while if the wires were known to be bare greater caution would be used in handling other wires or metal objects around these lines.

Overhead construction is generally used for distribution lines as its cost is usually only about 20 to 30 per cent of the cost of underground distribution. In very congested business districts or high grade residence sections, where overhead lines are objectionable from the standpoint of danger or appearance, underground distribution may be used.

In overhead distribution line construction the distance between poles is often much less than that used with transmission lines and the question of conductor strength doesn't enter into the problem to such an extent.

Distribution line poles are generally spaced from 100 to 125 feet apart, and located at the lot lines when possible. Poles are often set closer than 100 feet to corner poles to help take some of the strain. Whereever necessary stranded steel guy wires are used to relieve the poles of excessive strain. These guy wires are usually from ¼ to ⅝ inch in diameter, according to the load placed on them, and are fastened either to a ground anchor, guy stub pole, or to the bottom of an adjacent line pole. Strain insulators such as shown in Figure 347, are usually placed at one or two points in the guys.

Poles are generally of cedar, pine, chestnut, or cypress, and usually about 30 feet in length and with a top diameter of 7 inches, except where longer poles must be used to obtain a certain line height or clearance, or heavier poles for corner duty and heavy strains.

In ordinary soil, distribution poles are usually set from 5 to 6 feet deep, or up to 7 feet for extra high poles.

Distribution line cross arms are generally made of pine or fir, and are about 3¼″ wide by 4¼″ high, and 5′-7″ long for 4 pins, or 8′ long for 6 pins. These cross arms should be straight grained and free from any large knots in order to have sufficient strength to support the lineman as well as the conductors. The tops of arms are generally rounded slightly to shed water.

Cross arms are braced with strap iron or angle iron to make them more rigid and better able to support their loads. The arms are usually drilled for wood pins which support the small glass or porcelain insulators used in distribution work.

Conductors are generally drawn off from a reel placed at one end of the line, and pulled up over cross arms for a distance of 1000 to 2000 feet, then made fast at one end and pulled up to proper tension and sag by means of a block and line.

Distribution conductors on ordinary 100 to 125 feet spans are usually sagged about 18" if put up during cold weather with temperatures about freezing, to about 26" if put up during hot summer weather with temperature of 80 to 90 degrees F.

Shorter spans of course use less sag, and a span of 50 or 60 feet would only need to be sagged about half as much as one of 100 to 125 feet.

Insulated distribution conductors are tied to the insulators with a simple side tie, using a short piece of the same insulated conductor material with the insulation left on. See the Western Union tie shown in Figure 335.

Conductors should be arranged as neatly and uniformly as possible on all poles, to faciliate tracing circuits and locating certain conductors. They should also be kept far enough apart at the center of the arm to allow a lineman to climb through at the pole, and should be kept spaced a safe distance from any higher voltage wires that may be carried on a top arm on the same pole.

In calculating the size of conductors for distribution lines the formulas already given for voltage drop should be applied, to make sure that the voltage at the customers' premises is of the right value for efficient operation of lights and power equipment. Allowance should also be made for increase of load as additional customers are connected to the lines, and as the load of present customers increases.

In calculating the load demand on distribution lines the total connected customer load is seldom used. A load factor or average is used, and this may vary from 15 to 75 per cent. of the connected load, according to the nature of the connected customers' equipment. It is quite common to allow about 300 watts average load for each ordinary residence building unless some of them are equipped with electric ranges or heating equipment.

Actual meter tests and observations of the various customers' loads and load factors will help determine the proper size of transformers and conductors.

These tests and load factors also help to determine the size of transformers to install. Distribution transformers in ordinary residence sections are usually placed along the lines about every 500 to 600 feet, or the length of an average city block. This spacing it quite economical, as closer spacing of smaller units runs up the cost of transformers and light-load losses, while greater spacing increases the cost of Copper in the secondary mains more than the amount that can be saved by reduction of the number of transformers. The size of these transformers may range from 2 to 5 kv-a., in lightly loaded residence sections, to 10 to 100kv-a. or larger in apartment, business, or industrial sections.

Transformers are hung by means of heavy iron hooks, from extra heavy cross arms about 4" × 5". They usually have high voltage fuses or cutouts connected in their primary leads to protect their windings and secondary mains from damage in case of overloads or short circuits. Figures 106, 124 and 150 in Section Four of A. C., show several distribution transformers, and figures 119, 120, 121, 128, and 131 show common connections used.

Small autovalve and oxide film arresters such as shown in Figures 379 and 385 are commonly used for lightning protection on distribution lines.

Where high voltage conductors of distribution lines or transmission lines are taken from overhead poles or towers to underground cables or conduits they usually enter the cable or conduit through devices called **pot heads,** such as shown in Fig. 398.

These pot heads generally consist of a metal casing with a fitting for securely attaching them to cable or conduit, and one or more insulating bushings through which the overhead line conductors enter the pot head casing.

After the joints are made within the casing the pot head is usually filled with insulating oil or compound. Some pot heads are of the disconnecting type, having prongs attached to the lower ends of conducting rods which run through the bushings,

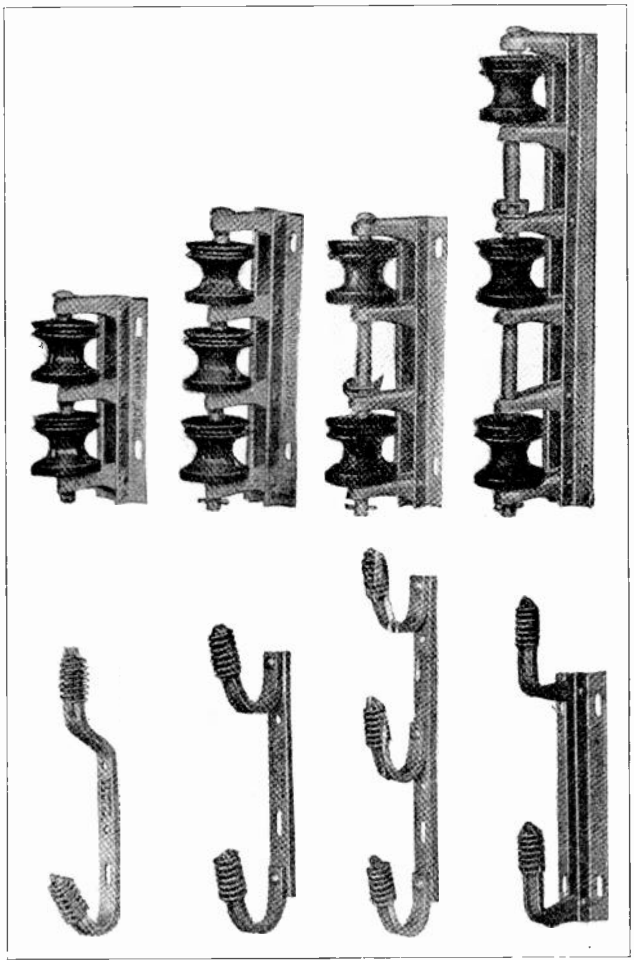

Fig. 399. The upper view shows cable racks used for supporting low-voltage wires on distribution poles or within factory buildings, and below are shown brackets for mounting small pin type insulators in groups on the sides of poles or buildings.

and these prongs fitted into spring sockets mounted in the lower section of the casing.

With this type of pot head it is only necessary to unbolt the cover and lift it and the bushings from the lower section, in order to disconnect the overhead from the underground line.

Low-voltage secondary wires of distribution systems are very often run on special metal brackets and knob insulators, known as **secondary racks.** Several of these secondary racks are shown in the upper part of Fig. 399. These racks can be attached to poles, cross arms, or to the sides of buildings, and are very convenient to mount and to support low-voltage insulated conductors.

In the lower view in Fig. 399 are shown several brackets for mounting small pin-type insulators on the sides of poles or buildings, or these metal brackets for mounting small pin-type insulators on to support additional conductors.

The hundreds of thousands of miles of distribution lines in use in the cities throughout this country, and even in some of the rural districts, provide splendid opportunities for trained men in the maintenance and inspection of these lines with their connected transformers and equipment, as well as in the erection of many thousands of miles more which are added to these lines each year.

Thousands of men are required to erect, inspect, change over, and repair distribution transformers and make new service connections, as more customers are constantly added to the existing distribution lines, and thousands more are constantly employed in the erection of new distribution and transmission lines.

COYNE
Electrical School

CHICAGO ~ ~ ILLINOIS

ESTABLISHED 1899

ALTERNATING CURRENT POWER
AND
A. C. POWER MACHINES

Section Eight

Substations

Transformer, Converter, Motor Generator and Rectifier Stations
Switchboards, Switchgear, Layout, Wiring, Operation
Circuit Breakers, Oil Switches, H.T. Fuses, A. C. Relays

Installation and Maintenance

Motors, Generators, Controllers and Transformers
Installing and Wiring

Inspection Schedules and Records

Tools, Instruments, Safety Precautions
Bearings, Types, Lubrication, Care and Repair
A. C. Motor Troubles and Remedies
Maintenance Tests
General

SUBSTATIONS

Substations have already been mentioned frequently in this Reference Set and in this section they will be more fully described. In general a substation may be said to be a station which receives electrical energy over a transmission line from a generating plant and changes this energy to a voltage, frequency, and form suitable for distribution to the customers and consumers in the district.

Substations may be roughly divided into two general classes: Alternating current step-down stations, and alternating to direct current converting stations.

Alternating current substations may also be divided into two classes: (a) Transformer or step-down stations for distribution. (b) Frequency changer stations.

A. C. to D. C. converter stations can be divided into three types, according to the equipment used: (a) Motor-generator stations. (b) Synchronous converter stations. (c) Mercury-arc stations.

Any substation may be either of the manually or automatically operated type. In manually operated substations operators are in attendance at all times to start and stop the machines; perform switching operations; regulate load and voltage; check meter readings; keep station records; and perform minor repairs.

In automatic substations the starting, stopping, and switching operations are performed by sensitive relays which operate air circuit-breakers or oil switches in the machine and line circuits.

The relays themselves are caused to operate by changes in the voltage or current of the lines leading from the station. For example, in stations that start up when the load demand becomes great enough, a current relay or contact-making ammeter can be used to close the circuit to a motor-driven drum control.

This control in turn will close the various circuits in order, for starting up a converter or other equipment in the plant. In other cases the starting relays may be operated by a contact-making voltmeter or potential relay whenever the line voltage becomes low enough, due to voltage drop that is caused by increasing load on the line.

Various auxiliary and protective relays are operated by changes in the speed of rotating machinery, changes in the temperature of equipment, or by certain faults occurring in the station.

Many automatic substations have what is called **supervisory control,** which enables the relays to be operated by remote control over telephone or signal wires from a master substation or the generating plant. Such stations are usually given a thorough inspection and checking once a day by an expert operator who may have charge of several stations.

388. DISTRIBUTION SUBSTATIONS

Distribution or transformer substations are by far the most numerous and common because the greater part of electrical energy used in this country is A.C. and therefore dosen't require conversion, as it is always transmitted as A.C.

In distribution stations transformers are used to step the voltage down from that of the transmission lines to voltages ranging from 110 to 440 for nearby customers, and from 2300 to 4000 or more for distribution feeders supplying customers who are more than a few hundred feet from the station.

The transmission line wires are usually brought into such substations through an outdoor structure containing the lighting arresters, high-voltage air break switches, oil circuit-breakers, etc.

In some cases this equipment is located inside the substation building.

Many substations can be supplied with power from two or more transmission lines and the switching equipment of each station is arranged so the station can be connected to any one of these lines in cases of trouble on others.

There may be one or more banks of transformers in a substation, according to its kv-a. capacity and the number of different voltages it is to supply. Transformer secondaries feed to various bus bars, which in turn feed through the proper circuit breakers to the separate distribution lines running from the station.

In case of trouble on any of these distribution lines their circuit breakers can be opened either automatically or by the operator, and thus prevent interference with the operation of the substation and other lines.

Substations supplying energy for lighting are frequently equipped with automatic induction voltage-regulators, as described in a previous section.

Distribution substations are generally equipped with some sort of switchboard on which are mounted the various meters and instruments for checking and recording the load on different circuits. These boards often contain automatic relays for overload protection, reverse power, undervoltage, etc.

High-voltage oil switches or air break switches in the transmission line circuits feeding the substation, may be remotely controlled by small push buttons or knife switches on the board in the station, or they may be manually operated in some cases.

Small transformer substations such as those located in industrial plants may not require an operator at all times. Such stations are usually equipped with watt-hour meters and in some cases with other recording instruments which can be read once a day or less often when the equipment is given inspection by the plant electrician.

Fig. 400 shows one-line diagram of the circuit through a simple transformer substation. Diagrams of this type show only one of the three phase wires and therefore do not show all of the connections of the equipment completed, but they do show the general arrangement of the more important devices and connections, and they are much simpler to trace than complete wiring diagrams.

Study this diagram carefully to become familiar with its use, as most substation and power plant operators are supplied with single-line diagrams as well as complete wiring diagrams of their stations.

In Fig. 400 the transmission line which feeds the substation is shown at the upper left. The lightning arrester, L.A., and the disconnent switch, D.S., are the first devices connected to the line. The choke coil is in series with the line and all other station equipment.

Current and potential transformers are provided for metering the energy supplied by the line, and in some cases another line might also be supplying energy to the high-tension bus of the station through a connection such as shown by the dotted line.

The oil switch, O.S., is to disconnect the line from the bus. The air break switch, A.B., can be used to "kill" the oil switch and instrument transformers when it is desired to work on them.

The current feeds from the high-tension bus through a disconnect, oil switch and current transformer to the step-down power transformer; then on through instrument transformers, oil switch and disconnect to the low-tension bus.

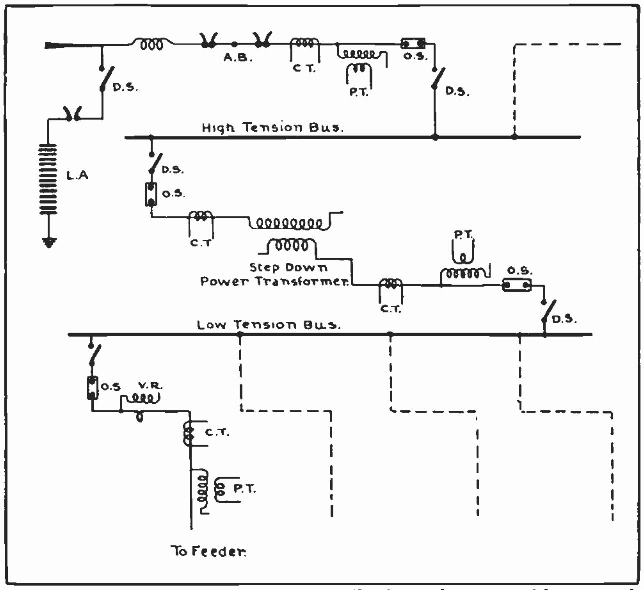

Fig. 400. Single line diagram of a distribution substation with one main power transformer for reducing the voltage from the transmission line. Trace this diagram carefully and familiarize yourself with each part from the explanations given on these pages.

More than one bank of power transformers may be connected between the high-tension and low-tension busses in large substations. In such cases the separate sets of instrument transformers permit the load on each bank of transformers to be read and checked, and the separate oil switches allow any bank of transformers to be temporarily disconnected during light load periods, without shutting down the station.

From the low-tension bus the energy is taken off to the distribution feeders through disconnects, oil switches, voltage regulators, V.R., and metering transformers.

These switches allow any certain feeder to be disconnected from the L.T. bus in case of trouble, and the instrument transformers allow the separate metering of the load on each feeder, as well as providing overload protection by overload relays operated by the current transformer to trip the feeder oil switch. These relays are not shown in this diagram; and only one feeder circuit is shown, the rest being indicated by the dotted lines.

The complete connections of the various pieces of equipment shown in the diagram in Fig. 400 have all been explained in earlier sections.

In some cases small isolated outdoor substations consist of just the transformers, arresters, and high-voltage air break switches, as shown in Fig. 401.

Still smaller pole-type transformer installations are often made as shown in Fig. 402.

389. CONVERTER STATIONS

Street railways and some other electrified railways and also certain industrial plants use large amounts of direct current, which is usually supplied from substations which change A.C. to D.C. by means of synchronous converters, mercury-arc rectifiers, or motor-generators. In converting A.C. to D.C. by any of these methods considerable power is lost, because in the average substation the load throughout a period of 24 hours varies considerably, with the result that during part of the time the equipment is likely to be operating lightly loaded and at reduced efficiency.

In synchronous converter or motor-generator stations the loss during light-load periods may be anywhere from 20 to 30 per cent. or more.

Mercury-arc rectifiers are much more efficient when operating at light loads than converters or motor-generator sets are.

For these reasons, some of the plants and railways which were formerly operated by D.C. are gradually changing over to A.C. motors, and other new plants and electrical railroads are using A.C. equipment entirely.

Synchronous converters are still the most commonly used machines for changing A.C. to D.C. in

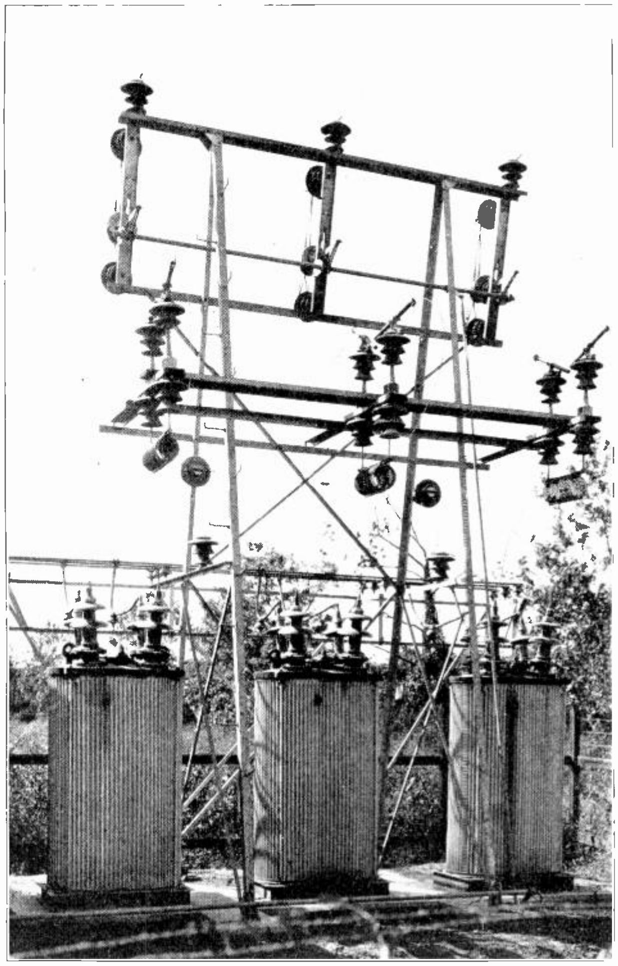

Fig. 401. Small outdoor transformer substation with transformers located on a base on the ground, and choke coils, fuses, and disconnect switches on the steel tower above them.

large amounts, although mercury-arc substations are rapidly coming into more general use.

The equipment of a complete converter substation generally consists of arresters, high-tension switching equipment, step-down transformers, synchronous converters, switchboard, oil switches, meters, protective relays, D.C. busses, etc.

The transformers reduce the voltage from that of the transmission line to that for which the A.C. ends of the converters are designed to operate on.

In most modern converter stations the transformer secondaries are connected so that they supply six-phase energy to the converter slip rings, as was shown in the preceding section on Synchronous Converters.

In most cases some form of switching equipment is provided for starting the converters from the A.C. end at reduced voltage from the transformer secondaries. This equipment may be either manually or automatically operated, according to the type of station.

The D.C. leads from the converter to the direct current busses are generally equipped with high-speed air-circuit breakers, to quickly disconnect the machines from the trolleys or feeders in case of severe overloads or in case of D.C. feed backs to the converters during periods of failure of the A.C. supply.

390. CONNECTIONS OF A CONVERTER SUBSTATION

Fig. 403 shows a one-line diagram of a converter substation. You will note that the high-tension lightning arrester, air break switch, oil switch, instrument transformers, and high-tension bus circuits are practically the same as for the transformer substation down to and including the step-down power transformer.

Between the step-down transformer secondary and the converter is shown the starting switch, S.W., for supplying reduced voltage to the A.C. end of the converter during starting.

The converter, slip rings, and commutator are shown by simple symbols in this diagram; and the negative brush is shown connected through the commutating and series fields and negative knife switch to ground.

In the case of a D.C. industrial substation the negative lead instead of being grounded would connect to a negative bus. The positive lead from the converter passes through a wattmeter or watthour meter, W; positive knife switch; ammeter shunt; overload trip coil; and circuit breaker, C.B., to the positive bus.

From the positive bus one or more feeders or trolley connections can be taken; and these are usually

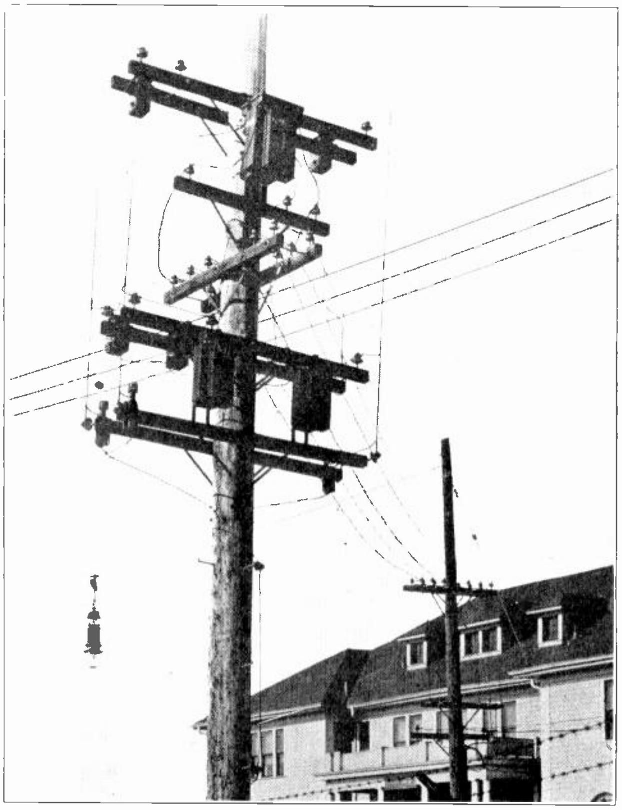

Fig. 402. Group of transformers mounted on heavy cross arms on an extra heavy pole.

provided with circuit breakers, with overload trip coils, and with ammeters for measuring the load on the separate trolleys or feeders. Note the small D.C. lightning arrester connected to the outgoing trolley or feeder wire.

If more than one converter is in operation in the station the equalizer connection and bus would be used as shown.

Fig. 261 in Section Six of this Reference Set shows in greater detail the connections for a six-phase rotary converter. It will be well to refer back to this diagram and keep it well in mind in connection with your studies of converter substations.

Fig. 404 shows a view of the inside of a synchronous-converter railway substation. The converter is shown in the foreground and the negative switch and field break-up switch can be clearly seen mounted on the side of the converter frame. Note the arc barriers around the brushes, and note also the motor which operates the brush-lifting mechanism. This motor is shown directly beneath the right-hand end of the machine shaft. The panel on the left contains the starting and running contactors for switching from low to full voltage during

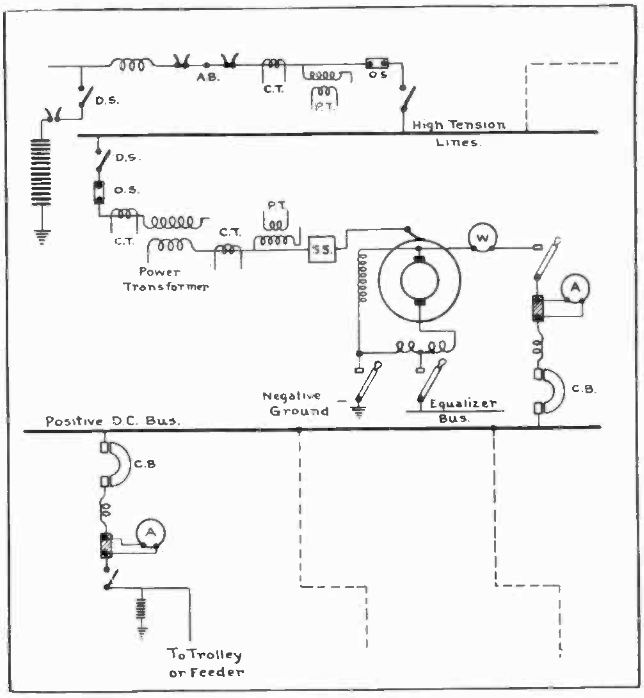

Fig. 403. Single line diagram of a synchronous converter substation, showing main step-down transformer, converter, and auxiliary equipment.

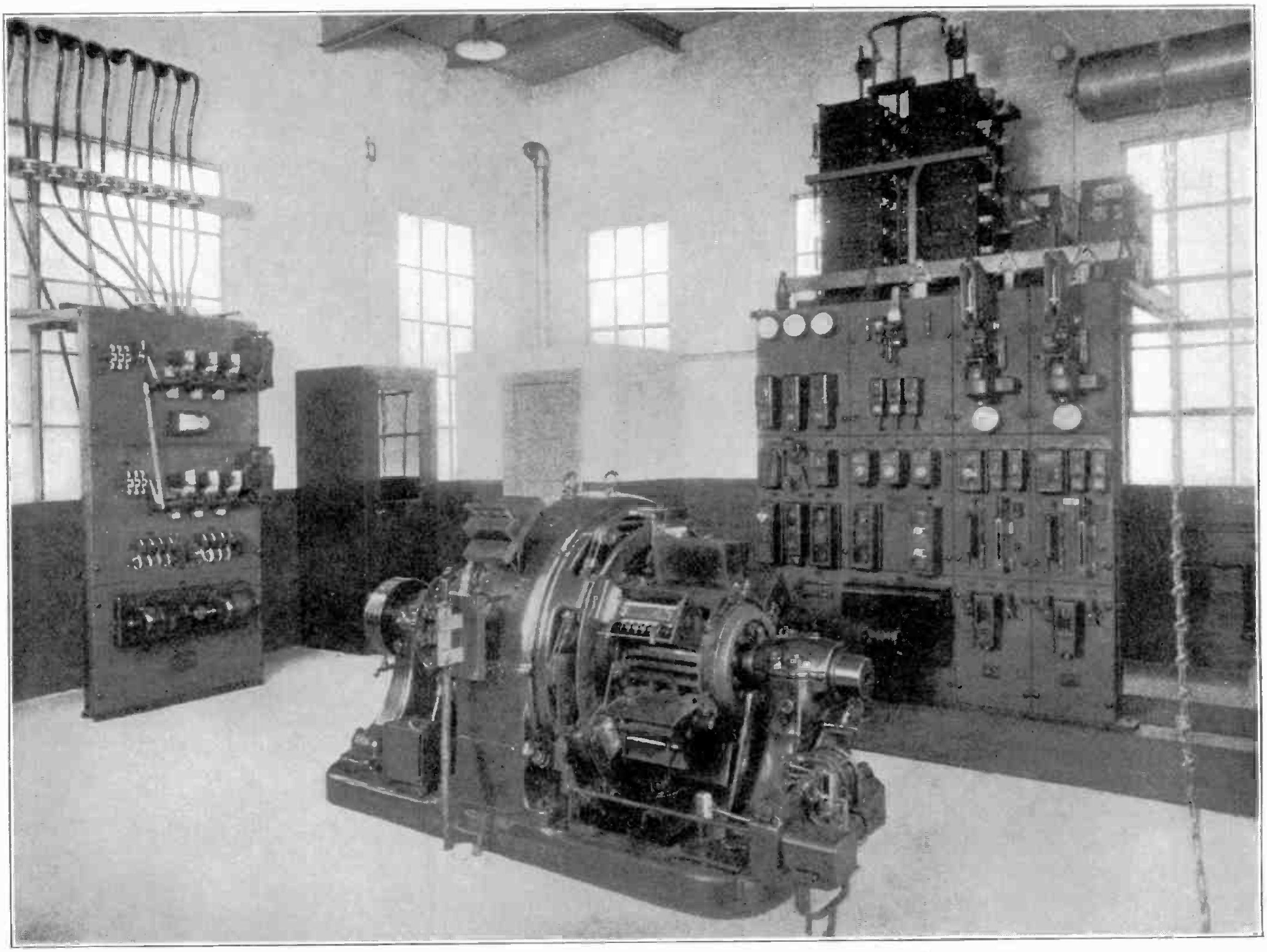

Fig. 404. This photograph gives an excellent view of the inside of an automatic converter substation. The converter is shown in the foreground, the starting panel at the left, and the main switchboard with the automatic control relays and circuit-breakers in the right background. Courtesy of General Electric Co.

starting of the converter. The small field-flashing motor-generator set is also shown on the bottom of this panel. The leads from the transformer secondaries can be seen entering the substation through the wall bushings and leading to the starting panel. The transformers at this station are located outdoors.

The main switchboard panel contains the positive breaker, feeder switches and breakers, motor-operated drum control for automatic starting of the station, and the various meters and relays.

The converter shunt-field rheostat wheel can be seen at the center left of the panel. The positive bus can be seen at the top of the board, and behind these are large banks of armature protective resistors which are automatically cut into the armature circuit of the converter in case of short circuits or overloads on the controls or feeders.

In case these overloads are left on the machine too long the resistor grids overheat, causing thermostats which are mounted above them to close circuits to the proper relay on the boards; and this relay in turn trips the breakers, shutting the converter down.

The duties of an operator in a manually-operated converter station are to start and stop the machines as the load requires and as described in Section Six under Synchronous Converters.

The operator should also make frequent inspection of the bearing lubrication and the temperatures of the machine windings; take meter readings at regular intervals; keep the station records; reclose breakers in case of trip outs; and see that all circuit breakers, relays, and protective equipment are kept in proper adjustment.

Further details have been outlined under the operation and care of the various devices previously explained in this Reference Set.

391. MOTOR-GENERATOR SUBSTATIONS

In certain classes of substations motor-generators are used instead of synchronous converters for the purpose of changing A.C. to D.C. Such motor-generator sets may consist of either a squirrel-cage induction or a synchronous A.C. motor directly connected to a D.C. generator.

A considerable number of motor-generator substations have been installed in the past and are still in use, although converter substations are generally favored for present day installations because of the higher efficiency of synchronous converters.

There are, however, certain classes of very severe service, such as the widely varying loads in steel mills and certain industrial plants, where motor-generators are to be preferred because of their greater stability in operation and their very rugged mechanical construction.

Rotary converters are rather sensitive to sudden load fluctuations and are sometimes difficult to operate in parallel under severe service conditions.

In operating motor-generators there are to be considered the losses in both the motor and the generator. For example, if both the motor and the generator of an M.-G. set have efficiencies of 90% at full load, then the over all full-load efficiency of the unit will be 81%. At light loads this efficiency will be considerably lower.

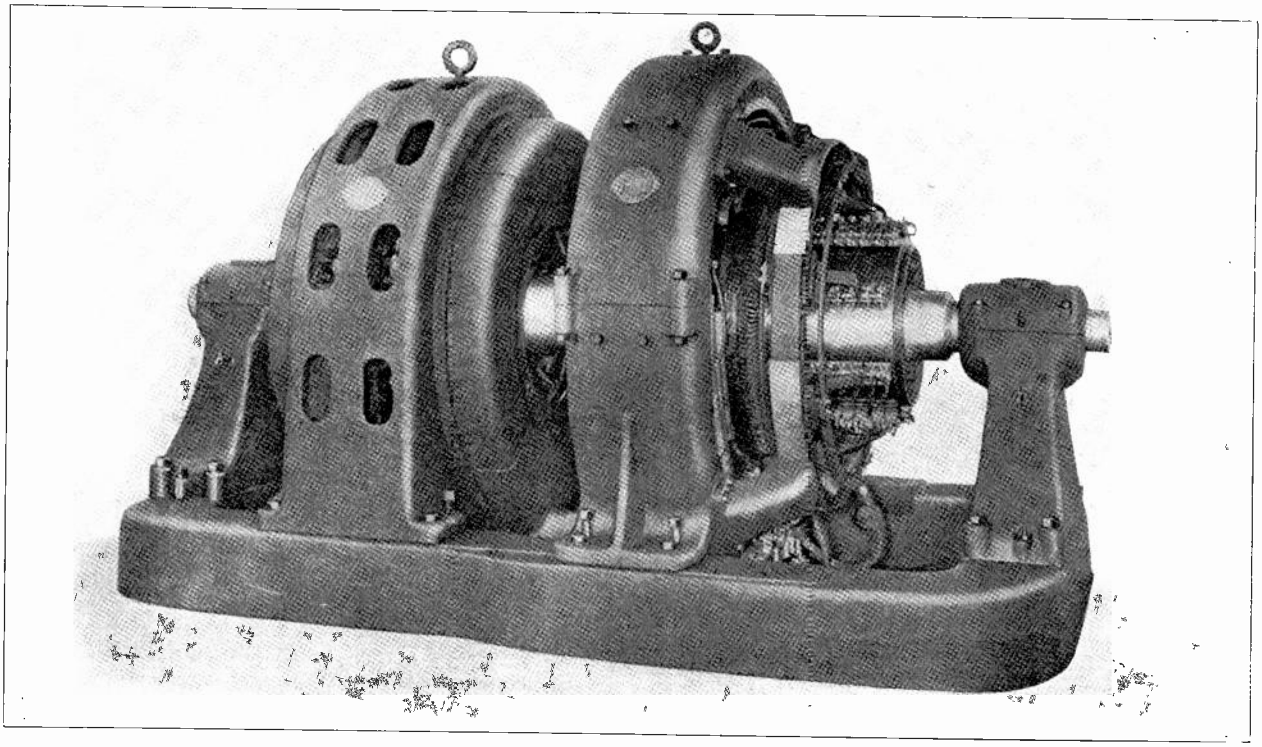

Fig. 405. Motor-generator set for converting alternating current to direct current. The A. C. motor on the left is direct-connected to the D. C. generator on the right.

Fig. 405 shows a large motor-generator with the A.C. motor on the left and the D.C. generator on the right. Both armatures of this machine are mounted on the same heavy shaft, and both the stator of the A.C. machines and the field frame of the D.C. generator are mounted on the same bed-plate.

Fig. 406 shows a 1000-kw. motor-generator set driven by a 4000-volt three-phase, synchronous motor. The exciter-generator for supplying the direct current field energy for the synchronous motor can be seen on the left.

In this unit the motor and generator armatures are mounted on separate shafts which are direct coupled and supported by a bearing between the machines as well as the two end bearings.

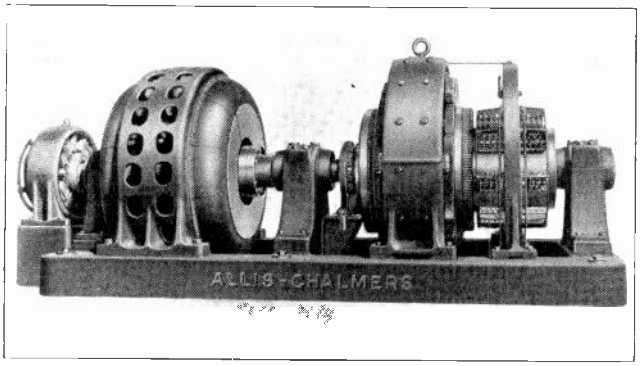

Fig. 406. 1000-kw. motor-generator set with an A. C. synchronous motor and exciter on the left, and the D. C. generator on the right. Courtesy of Allis-Chalmers Mfg. Co.

Where motor-generator substations are fed from high-voltage transmission lines they are equipped with arresters, step-down transformers, oil switches, etc., similar to those used in transformer or converter substations.

The starting equipment for the A.C. motor depends upon whether it is of the squirrel-cage induction or synchronous type. The methods of starting each of these machines have been described in previous sections on A. C. Motor and Controllers.

The D.C. energy from a motor-generator set is usually passed through the proper switches, circuit breakers, and meters on a D.C. switchboard in the substation and then to the various feeder circuits throughout the plant, or to trolleys in case of railway substations.

Motor-generator stations for steel mill use are often equipped with large, heavy fly-wheels as shown in Fig. 407, in order to enable the unit to carry heavy momentary overloads without using an excessively large A.C. motor.

During periods when the load on the D.C. generator is comparatively light the A.C. motor very slightly increases the speed of the fly-wheel and stores a considerable amount of energy in it.

When sudden, heavy overloads are placed upon the D.C. generator by large steel mill motors the speed of the motor-generator is slightly reduced, thus absorbing the mechanical energy from the fly-wheel.

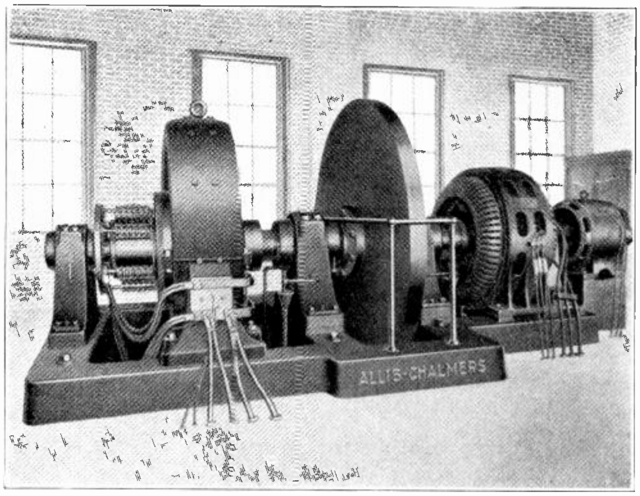

Fig. 407. Motor-generator set with large flywheel for carrying heavy momentary overloads in steel mill work and other classes of severe service. Courtesy of Allis-Chalmers Mfg. Co.

On large units several thousand additional horse power can be delivered for periods of a few seconds by the energy in the fly-wheel.

In addition to supplying direct current in steel mill and railway substations motor-generator sets are commonly used for supplying small amounts of direct current for electro-plating, arc welding, or other special uses in industrial plants which are largely operated by A.C.

Fig. 408 shows a compact type of motor-generator set for use with D.C. elevator equipment. In addition to the main A.C. motor and D.C. generator units this machine also has a small exciter-generator, shown on the left, and a speed regulating generator, shown on the right, for controlling the D.C. field of the elevator machines.

392. FREQUENCY-CHANGER SUBSTATIONS

Motor-generator sets are also used for changing alternating current from one frequency to another. For example, if a transmission line supplies energy at 25 cycles to a factory or plant which has equipment that operates on 60 cycles then a motor-gen-

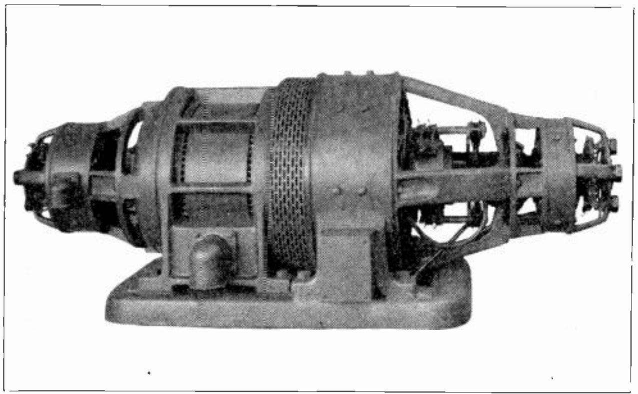

Fig. 408. Compact type of motor-generator set used for operating D. C. elevator motors. Courtesy of G. E. Company.

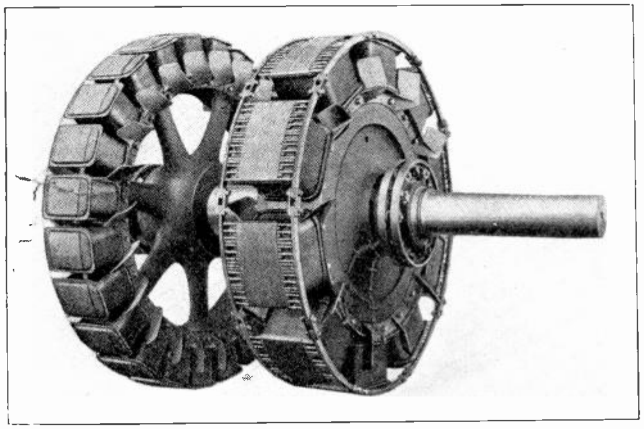

Fig. 409. Double rotor of a frequency changer motor-generator set. The ten-pole rotor operates on 25 cycles and the 24-pole rotor produces 60-cycle energy. Courtesy of Allis-Chalmers Mfg. Co.

erator frequency-changer is used to convert the 25-cycle energy into 60-cycle energy. A set of this type would use a 25-cycle synchronous motor to drive a 60-cycle A.C. generator.

Frequency changers are also used to tie 25 and 60 cycle lines or power systems together.

In directly connected frequency-changer sets the motor and generator must both revolve at the same speed; so, in order to obtain the different frequencies. it is necessary to have different numbers of poles in the two units.

For example, a machine to convert 25-cycle to 60-cycle energy and designed for operation at 300 RPM would have to have a synchronous motor with 10 poles and an alternator or A.C. generator with 24 poles.

The rotors for a 1200 kv-a. machine of this type are shown in Fig. 409, the 10-pole D.C. field of the synchronous motor being on the right and the 24-pole alternator field on the left.

A number of motor-generators of this type can be operated in parallel if they are properly phased out and synchronized just as alternators would have to be.

Frequency changers are built in sizes ranging from those of a few kv-a. to 50,000 kv-a.

Fig. 410 shows two A.C. motor generator units in a frequency-converter substation.

393. MERCURY-ARC SUBSTATIONS

As explained in a previous section, mercury-arc rectifiers are coming into quite extensive use for converting A.C. to D.C. in railway substations as well as for certain industrial uses. Mercury-arc rectifiers are in many cases preferred to either sychronous converters or motor-generator sets, because of their very quiet operation and their higher efficiency when operating lightly loaded.

In addition to the rectifier unit, mercury-arc substations include the usual lightning arresters, oil switches, circuit breakers, meters, relays and the step-down power transformers which are used for reducing transmission line voltage to the proper operating voltage for the converter.

Fig. 411 shows a view of the inside of an automatic mercury-arc rectifier substation. This photograph shows the mercury-arc rectifier on the left; and also shows the automatic-control switchboard with its meters; circuit breakers, and relays. The

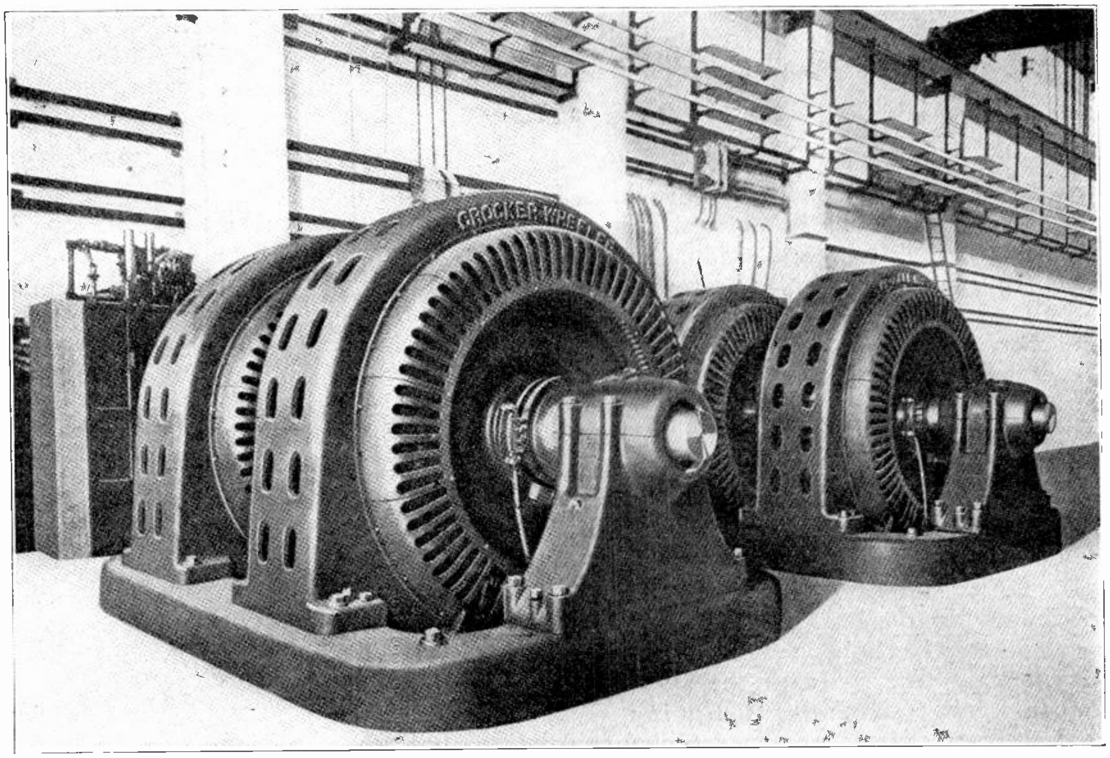

Fig. 410. This photograph shows two large motor-generator sets in a frequency converter substation. Machines of this type are used where it is necessary to change the frequency of the alternating current supply to another frequency required for the operation of certain motors or other electrical equipment.

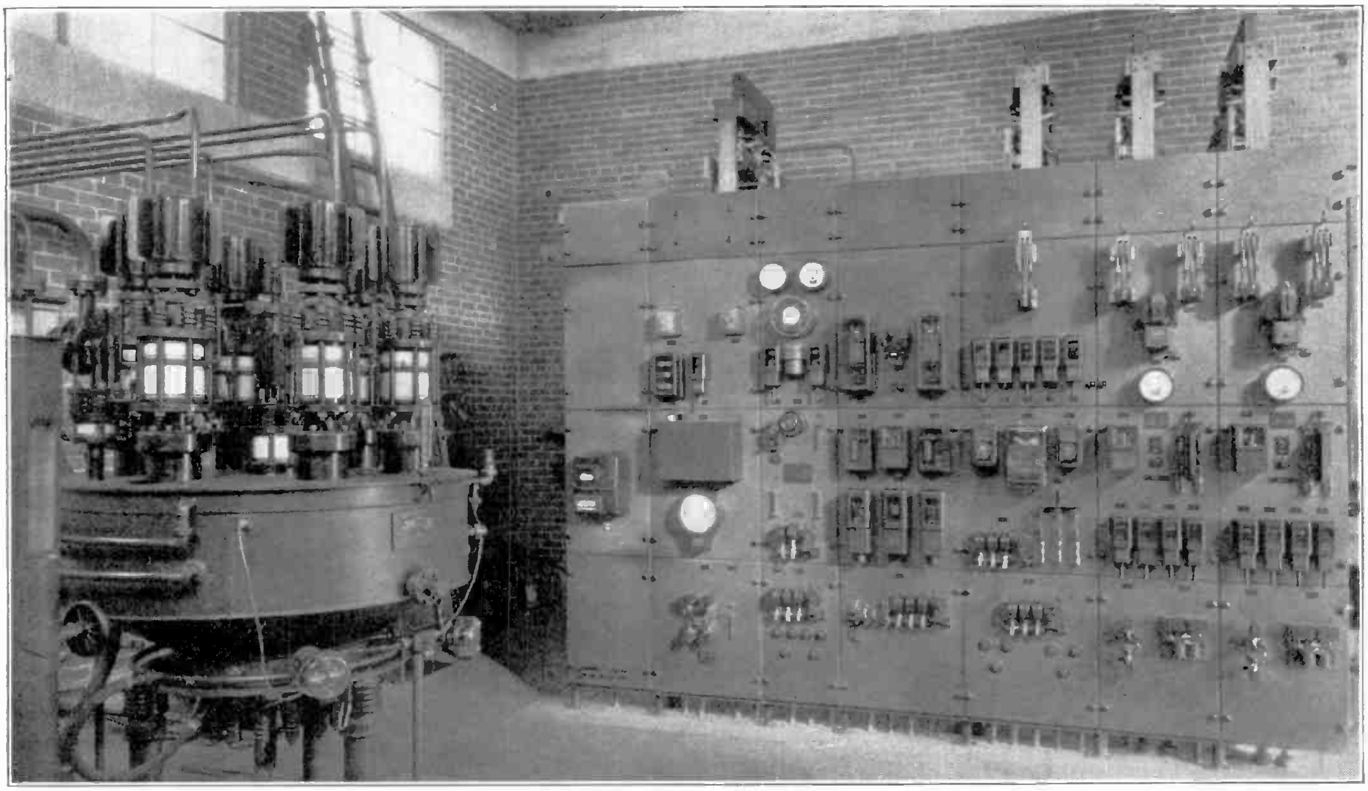

Fig. 411. This photo shows an excellent view of the interior of an automatic mercury arc rectifier substation. The rectifier is shown on the left and the automatic control switchboard with its relays and circuit breakers is shown on the right. Courtesy of General Electric Co.

transformers, lightning arresters, and high-tension switching equipment are located outside the station building.

The operation and care of mercury-arc rectifiers have been covered in the previous section, and the general features of the other equipment and the circuits for these substations are very similar to those of synchronous converter stations.

394. COMBINATION SUBSTATIONS

In many cases large substations may combine two or more of the types of equipment and service already described. For example, a single substation may include step-down transformers for reducing the voltage from high-tension transmission lines to the proper value for local A.C. distribution; synchronous converters, with their separate transformers and equipment for supplying D.C. to local street railways or industrial plants; possibly also a later type mercury-arc rectifier operating in parallel with the synchronous converters; and even one or more motor-generator sets for supplying D. C. or A. C. of a different frequency for special purposes.

Fig. 412 shows the power transformers, lightning arresters, and disconnect switches, all of which are commonly located outside the substation structures. Such equipment as synchronous converters, mercury-arc rectifiers, and motor-generators are placed inside the building.

Switching stations or transformer stations such as shown in Figs. 413 and 414 are often used where transmission lines of different voltages or operated by different companies are joined together. Such stations contain transformers, oil switches, air break switches, and disconnects; and also high-tension transformer busses for shifting the connections from one line to another.

In Fig. 413 the transformers are shown in the left foreground. The oil switches are shown in the background. The high-tension air-break and disconnect switches and the high-voltage transformer busses are supported in the steel structure overhead.

Fig. 414 shows a 220,000-volt switching station, with lightning arresters on the right and huge oil switches on the left. Note the high-tension busses

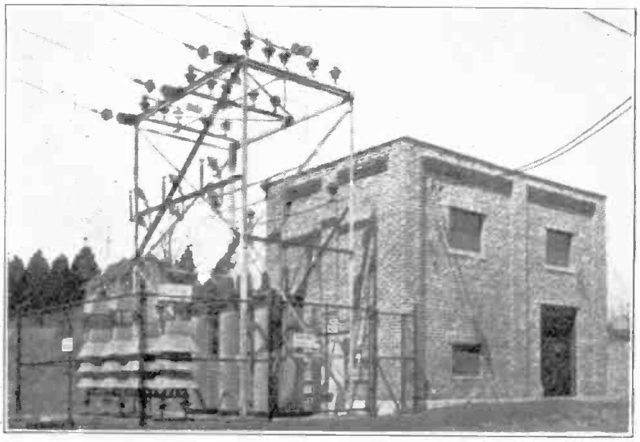

Fig. 412. Exterior view of a modern substation showing incoming line, choke coils, fuses, disconnects, lightning arresters, and power transformers outside of the building. The synchronous converters are located inside of the building.

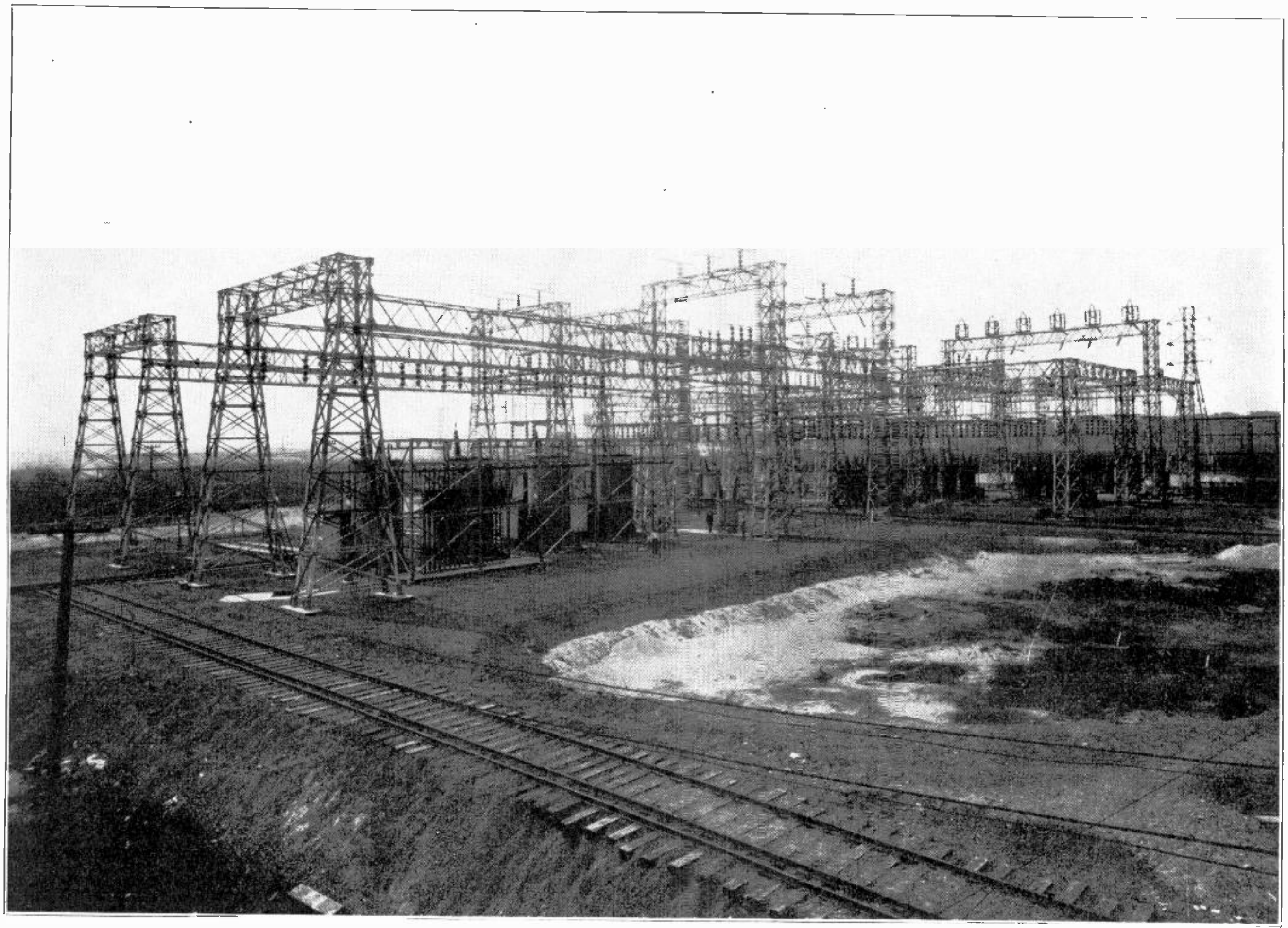

Fig. 413. Large outdoor switching and transformer station. Stations of this type are used where transmission lines of different voltages tie together, and to provide switching facilities for branch lines of the same voltage. Transformers are also sometimes used in such stations for feeding local distribution lines. The large mass of structural steel framework makes a station of this type look rather complicated, but by carefully tracing the conductors through the framework and tracing a plan of such a station on paper, the circuits will be found very simple. Courtesy of Walter Bates Steel Company.

and connections supported by pillar-type insulators in the steel framework overhead.

395. SWITCHBOARDS

Switchboards in A. C. power plants and substations are very similar to those which were described in Direct Current Section Two for D.C. plants, except that boards controlling three-phase circuits use three-pole switches and circuit breakers instead of two-pole units such as are used with D.C.

In converter and motor-generator substations switchboard equipment is connected in the circuits on the A.C. ends, as well as from the D.C. ends of the machines. You are already familiar with D.C. switchboards.

Switchboards in A. C. power plants may be either of the vertical panel type, bench type, or truck type, all of which were previously described in Section Two of Direct Current.

The general construction features, bus bar arrangement, etc., are practically the same for A.C. boards as for D.C.

Meters on A.C. boards are generally operated from current and potential transformers, instead of from shunt and direct connections to the busses as on D.C. boards.

On manually-operated switchboards in A.C. generating stations oil switches are more commonly used in the main circuits than knife switches are. The oil switches, being mounted behind the board and operated by a lever or handle on the front of the panel, provide a much safer arrangement for high-voltage circuits than would open knife-switches on the face of the board.

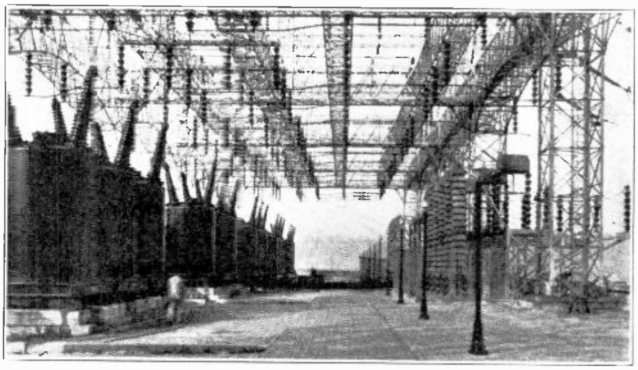

Fig. 414. View of large oil switches and lightning arresters underneath the bus and switching structure of a 220,000-volt outdoor substation. Courtesy of Philadelphia Electric Company.

Fig. 415 shows an excellent view of a manual switchboard in a 2300-volt A.C. generating plant. The three main-generator panels are shown in the center, with their oil switches, meters, rheostat controls, and plug-type instrument switches.

On the right are shown four feeder panels equipped with oil switches, relays, and watthour meters. On the left are shown the controls for the exciter-generators and voltage regulator; and also the station ammeters, voltmeters, and synchroscope mounted on a hinged bracket at the extreme left of the board.

This switchboard is typical of the vertical-panel type, with all wiring and bus bars mounted on the rear and enclosed by a screen guard.

396. SWITCHGEAR

As previously mentioned in the D.C. Section, the switches and controls used on these boards are all classed as "switchgear" and are for the purpose of opening and closing the various generator and feeder circuits in the plant.

The switches on the generator panels control the generator-armature circuits and are used in starting, stopping, and paralleling these machines. The switches on the feeder panels control the energy which is distributed from the main busses through these feeder sections to the various loads.

Fig. 416 shows a diagram of a single switchboard panel on the left, an end-view of a board in the center, and some of the principal circuits on the right. Note the arrangement of the meters, switches, and controls on the front of the panel at the left; and also the side-view of this equipment, including the current transformers, oil switch, busses, and the instrument resistors shown in the center.

Fig. 417 shows a remotely-controlled, bench-type switchboard such as is commonly used in large A.C. generating stations. The meters for the various generators are mounted on the vertical panel above the control board.

The push-button and push-pull type switches and the small hand wheels shown on this board are used to control circuit breakers, oil switches, and the motor-operated rheostats which are located in another part of the plant.

In some cases the throttle and governor controls for the generator prime movers are also placed on these switchboards.

With boards of this type the heavy-duty oil switches handling large amounts of current at very

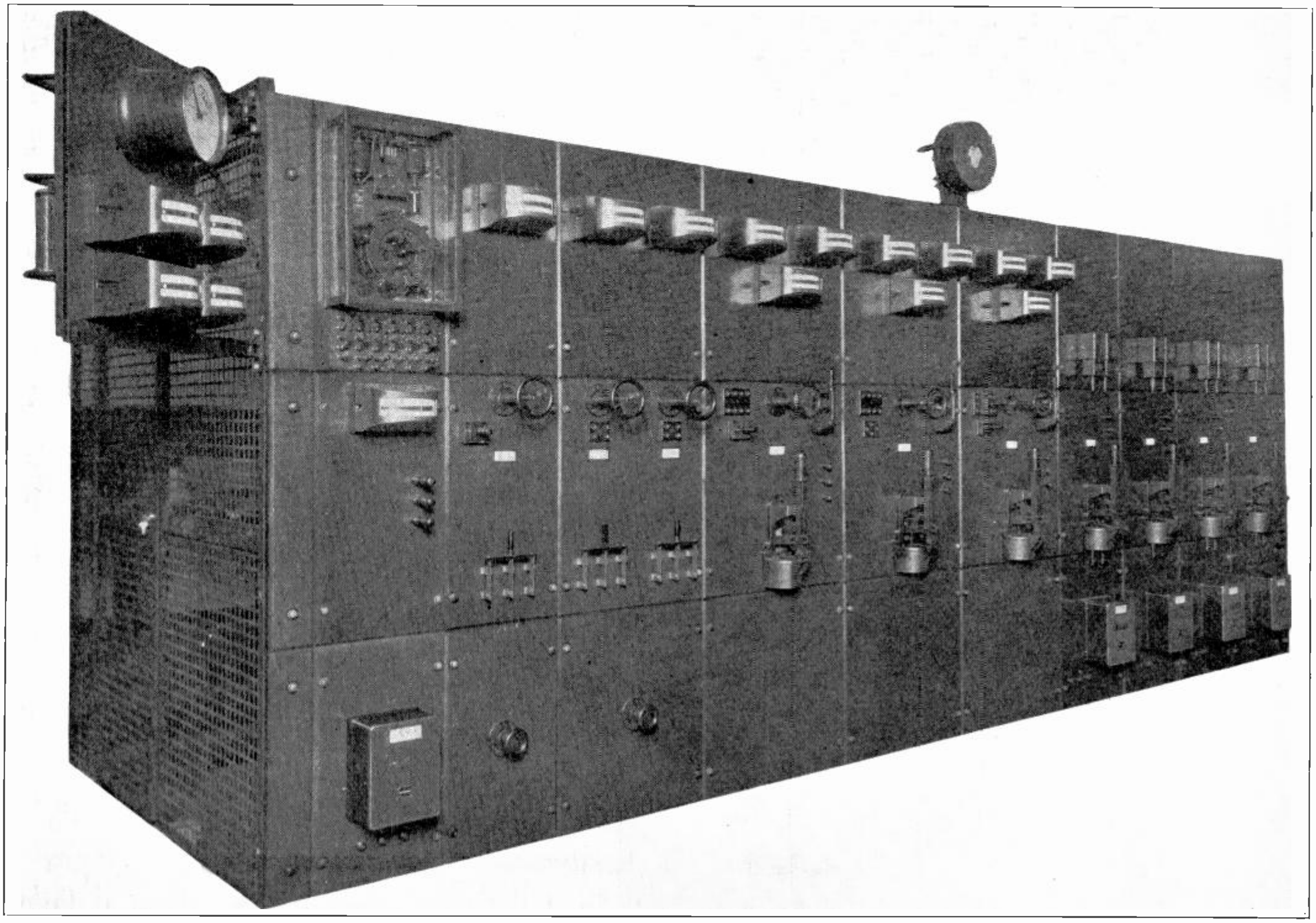

Fig. 415. An excellent view of a modern panel-type A. C. switchboard. Note carefully the location and arrangement of the meters, oil switches, relays, and rheostat controls. Courtesy of G. E. Company.

high voltages can be safely located in a switching vault or room, thus keeping the operators safely away from all high-voltage circuits and the dangers of bad flashes or arcs.

Remote-control switchboards also permit grouping the controls of a large plant closely together, for convenient operation. The large oil switches and rheostats used in a central station would be too bulky to mount at the rear of any ordinary sized switchboard.

These remotely-controlled oil switches can be opened or closed by pushing or pulling the small switch knobs on the board.

These switches generally close circuits to powerful solenoids, electro-magnets, or small motors which operate the oil switches. Some oil switches are operated by compressed air or hydraulic cylinders, but these are not nearly as common as the solenoid-operated type.

The large generator and exciter rheostats can be controlled by switches which start, stop, and reverse the small motors which drive them.

Pilot lamps are commonly used on remote control boards to indicate when certain switches or breakers are open or closed and to show which circuits are alive.

Fig. 418 shows a modern truck-type switchboard, such as is coming into quite general use in substations and small industrial power plants. One panel or unit of this board is shown withdrawn from the main group, illustrating the great convenience with which the oil switch, meters, and devices can in this manner be entirely disconnected and removed from the main board and live circuits.

When the unit is pushed back into place the spring clips or prongs shown at the rear are again automatically connected with the live bus bars and circuits. The increased convenience and safety features of this type of board are causing it to become very popular in many plants.

397. SWITCHBOARD LAYOUT AND ARRANGEMENT OF INSTRUMENTS

As the switchboards in generating stations or substations form the heart of the control for all machines and circuits in the plant, as well as for the power lines and circuits radiating from the plant, it is very important to make a careful study of the circuits and operation of the switchboard in any plant in which you may be operating.

Central stations of large capacity often combine a certain amount of distribution with higher voltage power-transmission. This is particularly true of stations located in or near large cities.

The switchboards should provide a convenient arrangement of generator and feeder panels for controlling the various machines and feeders.

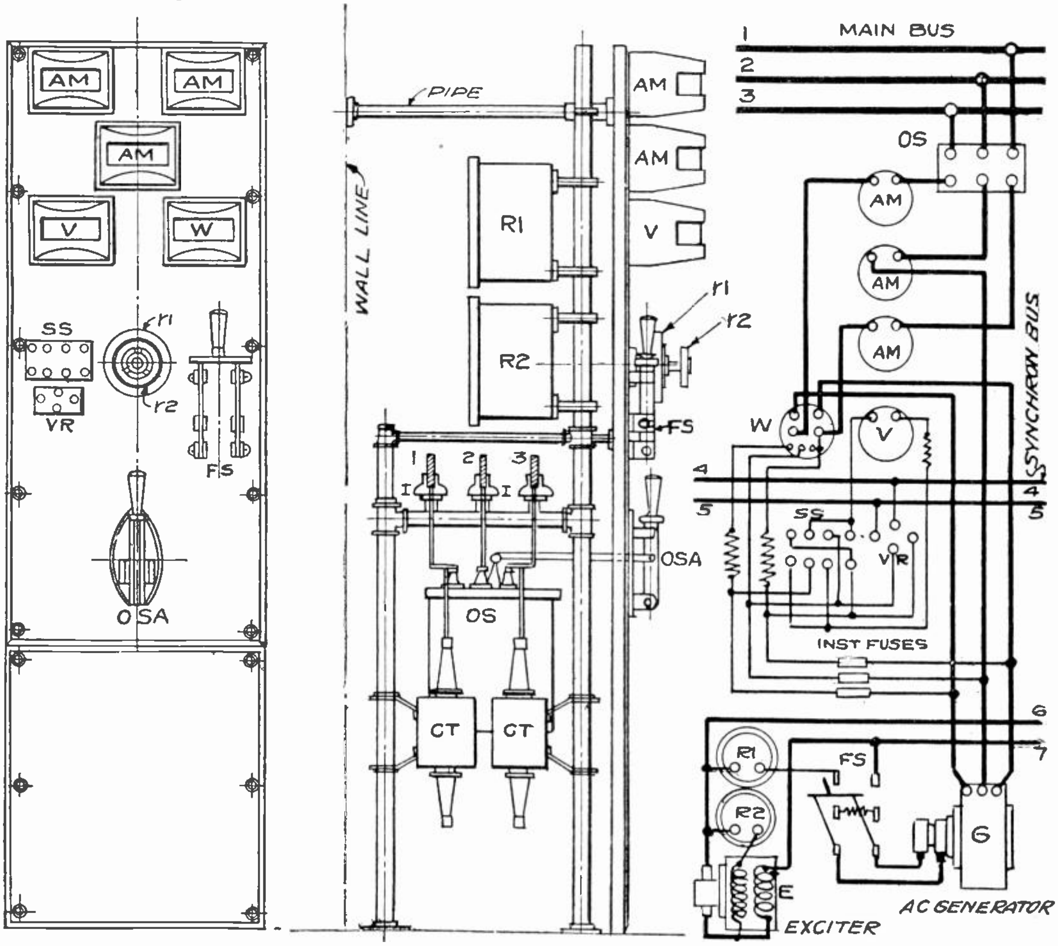

Fig. 416. These diagrams from left to right show respectively a front view, side view, and the wiring of a single panel in an A. C. plant.

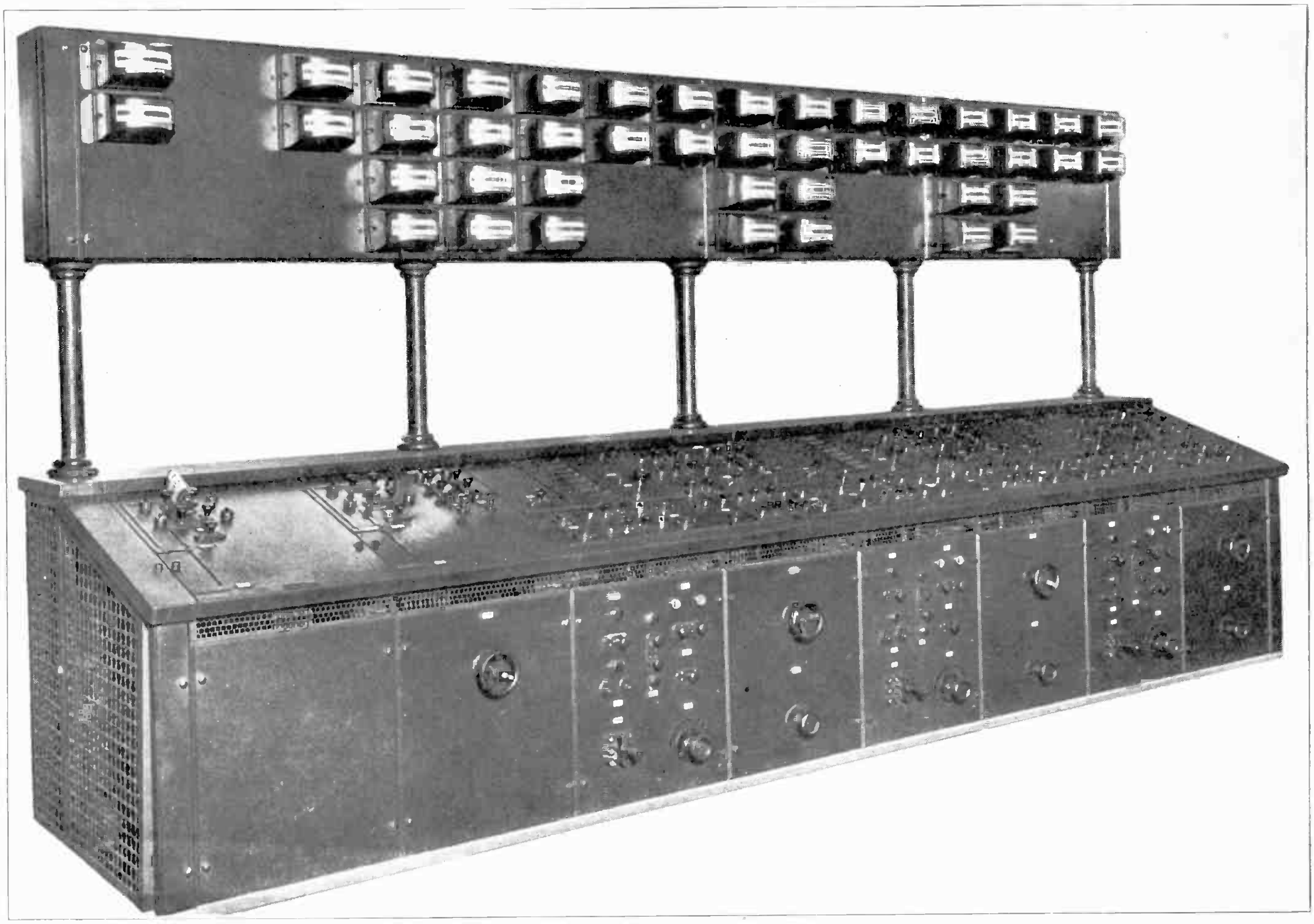

Fig. 417. Modern bench-type switchboard for remote control of generators and oil switches in a large central station. Note the arrangement of the meters and the push-pull switches which control the solenoid-operated and motor-operated oil switches and devices throughout the plant. Courtesy of G. E. Company.

For example, a central station may have five generators of 30,000 kv-a. capacity and 11,000 volts each. The output of any one of these generators may be controlled through one of a group of generator panels at the switchboard, where their outputs are all combined together in one main bus. From here it may be fed to step-up transformer banks.

Let us assume that there are three separate banks of transformers, one of which increases the voltage to 22,000 volts, another to 66,000 volts, and the third to 132,000 volts.

Energy may be taken from the 22,000-volt bus through feeders to a number of local substations. The 66,000-volt bus may be used for an interconnecting tie with another power line of this same voltage. The 132,000-volt bus may feed one or more long distance transmission lines to carry energy to some city or industrial center at a distance.

Swithboard meters are made in several different styles, such as round, square, and edgewise types, so that the desired spacing and appearance can be obtained on the panels.

Meters should never be crowded too closely together on switchboard panels, as sufficient room should be provided for working on any individual meter without interference with adjacent ones.

The several views of switchboards shown on these pages show very neat and logical arrangements of meters.

Multiple instruments consisting of several meter elements within one case are often used to save space on switchboards. For example, three separate ammeter elements—one for each phase of a three-phase generator and each having its own scale—

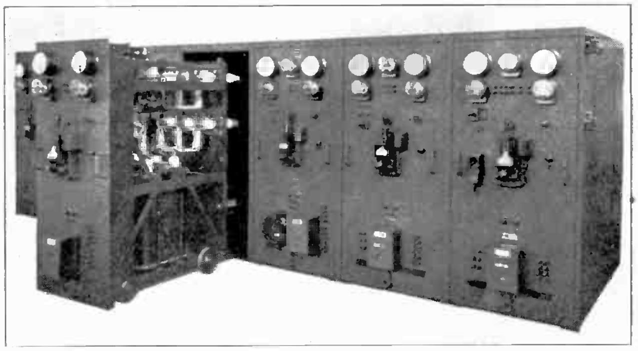

Fig. 418. View of truck-type switchboard showing one section removed to allow repairs or adjustments to be conveniently and safely made. Boards of this type are very popular in modern industrial plants as well as in certain power plants and substations. Courtesy of G. E. Company.

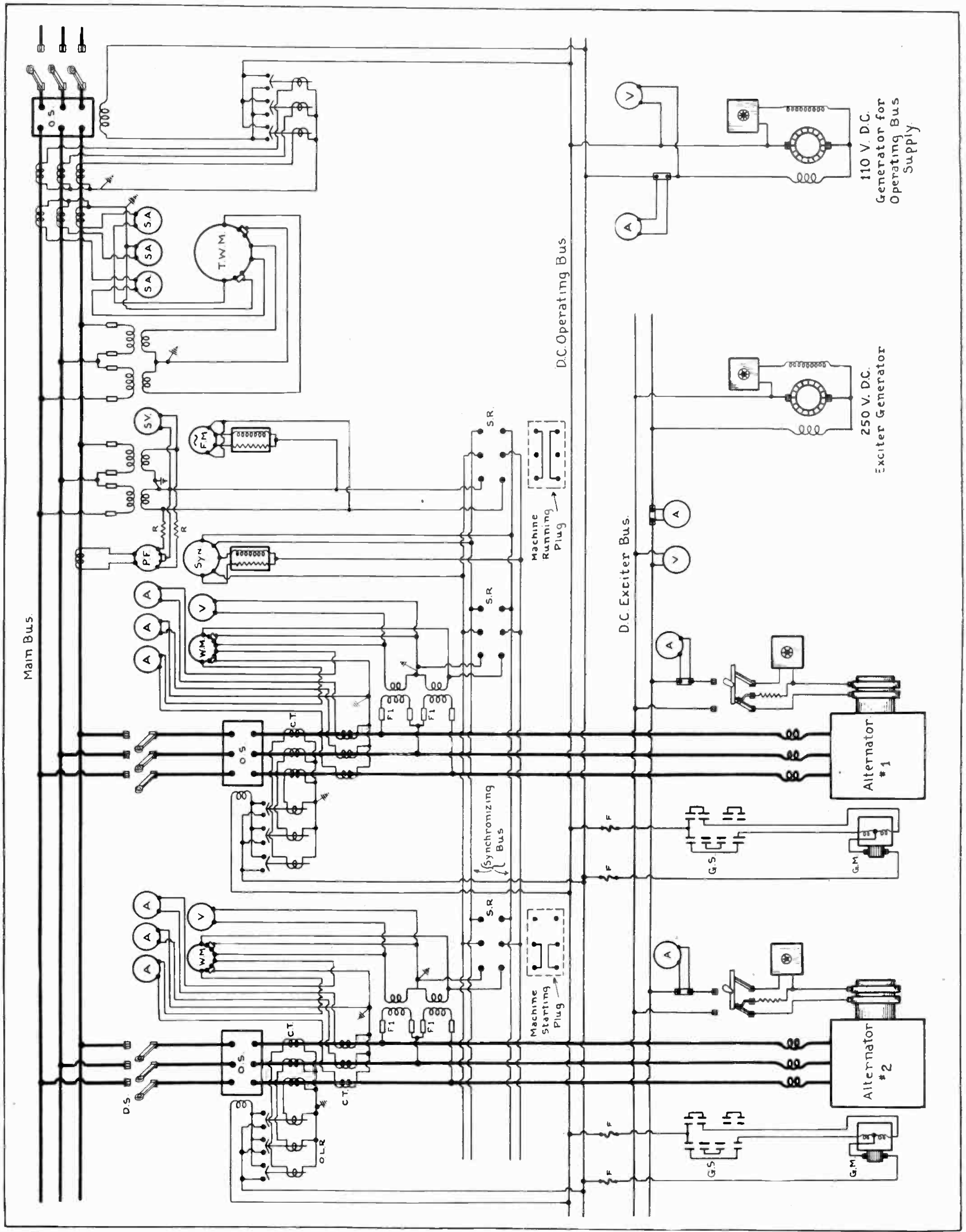

Fig. 419. Complete wiring diagram for a modern power plant switchboard, showing the connections of two three-phase alternators and their various auxiliaries, and also the connections of the meters, relays, and oil switches. Trace this diagram very carefully and locate each part referred to in the accompanying explanation.

can be built in one case to take the place of three separate ammeters.

Meters should be properly mounted and illuminated so that they can be easily read by the operators from a convenient position.

Watthour meters and recording instruments are sometimes exceptions to this rule and are quite often located near the bottom of switchboard panels as they usually don't have to be read as frequently as voltmeters, ammeters, and wattmeters.

398. SWITCHBOARD CIRCUITS AND WIRING

Fig. 96 in Section Three on Alternating Current shows a wiring diagram for the main generator and exciter panels of one three-phase alternator in a small power plant.

Fig. 419 shows a wiring diagram for two three-phase alternators and the instruments and equipment of a modern power plant switchboard to be used with these machines.

Examine this diagram very carefully and become thoroughly familiar with the circuits and equipment shown, and study out the operation and function of each circuit and device. A diagram of this kind is well worth several hours of your time, as it is quite typical of the arrangement of switchboard circuits in a great many modern power plants.

The main A.C. bus and alternator leads are shown in heavy lines so that they will be very easy to trace. Current passes from the alternators through a set of reactor coils, then through the instrument transformers, oil switch, O.S., and disconnect switches, D. S. to the main bus.

This circuit, of course, is completed only after the disconnect and oil switches are closed.

The upper set of current transformers are used to operate the overload relays, O.L.R., any one of which will close a circuit to the oil switch trip-coil in case of overload.

The current for the oil switch trip-coil is supplied from the D.C. operating bus, which runs the length of the switchboard and supplies direct current for the various devices which can be conveniently operated with D.C.

The lower set of current transformers are used to operate the three ammeters and the current elements of the polyphase wattmeter, W. M., in series. The potential transformer operates the voltmeter and the potential elements of the polyphase wattmeter.

This transformer also supplies the synchronizing bus when the machine starting plug is in place in the synchronizing receptacle, S.R.

You will note that the synchronizing bus runs the length of the board and connects to a receptacle for synchronizing either alternator with the other, and also to a third receptacle at the right for synchronizing either alternator with the live line from outside the plant in case this station is operating in parallel with others.

The oil switch, meter, and synchronizing circuits of the second alternator are exactly the same as those of the first. The synchroscope is shown at "Syn"; frequency meter at "F.M."; power factor meter at "P.F."; station voltmeter at "S.V."; station ammeters at "S.A."; and a totalizing station wattmeter at "T.W.M."

The main line or bus oil-switch, O.S., is shown at the right with its overload trip coils, relays, and disconnect switches. The exciter bus supplies current through the alternator, field ammeters, field-discharge switches, and field rheostats to the slip rings on the revolving field of the alternator.

The governor control motors, G.M., which operate the governors of the alternator prime movers, are also shown in this diagram. They are operated by the governor control-switch, G.S., by current supplied through the fuse, F., from the D.C. operating bus.

The power circuits on switchboards are usually run in heavy copper busses or cables, while the instrument and control circuits are wired with regular switchboard wire having heat resisting insulation, as explained in the Section on D.C. Switchboards.

All switchboard wiring should be done neatly and with a systematic arrangement or wires and circuits, in order to facilitate tracing the circuits and making repairs or additions to the wiring. Carefully examine the wiring on the large switchboards in the shop departments of the school.

399. SWITCHBOARD OPERATION

In order to thoroughly qualify for a position as switchboard operator in either a power plant or substation one should be thoroughly familiar with the principles, care, and operation of generators, transformers, motors, converters, rectifiers, meters, switches, circuit breakers, relays, lightning arresters, etc.

So, in preparing for a position of this kind, you should make a very thorough review of your notes from your actual shop work on these devices and also of the sections of this Reference Set which cover them.

Even though you feel well qualified to step in and operate a station, very few companies will allow any newly hired man to assume the full responsibility of an operator during the first few days, even though he may have had previous experience or training.

This is due to the fact that there are certain variations in the construction and arrangement of equipment in different plants and also variations in the operating rules and procedure of different companies.

You should, therefore, willingly and faithfully perform any minor and seemingly unimportant duties to which you may at first be assigned, and pay strict and alert attention to every operation and bit of instruction you can observe from those who may be instructing you or breaking you in.

All power companies are always looking for intelligent, ambitious, young men with practical training and good character, and the chief operators, plant foremen, and superintendents usually observe new men very closely; so it pays to be thoughtful, patient, and careful at all times when assigned to any duties in a power plant or substation.

During your first few weeks in a station you should in every way possible thoroughly familiarize yourself with all of the various pieces of equipment and the general plant layout. Read and make a note of the data on the various machine nameplates and memorize the capacity and voltage rating of the various machines.

Determine the sizes of the conductors leading from the generators to the switchboard and locate the proper switches and meters for each machine.

It is excellent practice to start by making a diagram showing the outline of the switchboard and all instruments and controls, completing the main panel first and then adding another panel to the diagram each day. In this manner you can very soon become familiar with the entire front of the switchboard.

Don't attempt to show any wiring in the diagram until you have all the instruments and devices in their proper location and thoroughly understand what each one is for in the operation of the plant.

It is good practice to lay aside your copied diagram and practice making sketches of the switchboard layout from memory.

Most power companies allow their operators to spend a certain amount of time on the job making diagrams and thorough studies of the plant, as well as to study any books or material which will help the operator in his work. Keep in mind that such studies should never be allowed to interfere with your work or alertness when on duty.

After completing diagrams of the switchboard equipment and plant layout a thorough study should be made of any wiring diagrams supplied by the company, and you should then make your own digrams from the actual wiring on the board and in the plant, carefully checking and marking each wire so that you know its voltage and current and the instrument or device to which it leads.

A thorough step-by-step study of the plant equipment and circuits made in this manner will soon enable you to have in your mind a complete simplified picture of the entire plant and this will be of great help in trouble shooting or in time of emergency operation, as well as in your ordinary everyday operating duties.

Almost all power companies periodically examine their men with written, oral, and practical operating tests. Try to be well prepared for these examinations, but don't worry too much about the possibility of failing in them as the company is merely trying to find out what progress you are making and to stimulate your thought and energy and develop your ability for promotion to positions of greater responsibility.

Always try to remain cool-headed and calm, whether during examinations or during emergencies which may arise in the operation of the plant. Think clearly and apply the principles of electricity, circuits, and machines which you have learned, and in this manner you can solve practically any problem or difficulty.

The responsibility of an operator in a large power plant or substation is very great, and the safety of the lives of fellow workers, the safety of costly machines owned by the company, and the satisfaction of customers with the service they receive depend to such a large extent upon plant operators that it pays to always be thoughtful and careful and to **use your head as well as your hands at all times.**

A few very good general rules or tips for the substation or power plant operator are as follows:

1. Always be careful and think before acting.
2. Practice safety-first and attend safety-first meetings.
3. Protect yourself and fellow operators with proper safety appliances.
4. Determine the functions of your station.
5. Keep accurate station records, such as daily meter or log sheets, repair sheets, trouble sheets, hold-cards, etc.
6. Keep the station and all equipment clean and orderly, and tools, safety appliances, etc., in their proper places at all times.
7. Learn thoroughly the procedure for starting and shutting down all machines.
8. Report to your superior all doubtful or unusual occurrences.
9. Never allow anyone except properly authorized persons inside of the station.
10. Never close a feeder switch without first being authorized to do so, and make a record of the operation with the authorizer's name.
11. Repeat all telephone orders received from the chief operator or dispatcher.
12. Properly tag all outgoing lines which have been "killed" for workmen to make repairs on them. The tag should preferably be of red cardboard and should carry the date, your name, the name of the foreman of the repair crew, reason for or nature of repairs, etc. See that the switches of such circuits are locked open and grounded.
13. See that danger signs are placed on all high-voltage equipment and guard rails around dangerous places. High-voltage outdoor equipment should be fenced in.
14. Consider all wires and equipment to be alive unless you are sure they are disconnected and thoroughly grounded.

15. Take pride in the proper care and condition and in the operating efficiency of every piece of equipment in your plant, as well as the plant as a whole.

16. Attend first-aid meetings and learn the location of first-aid kits and equipment in your station.

17. Practice resuscitation.

18. Be co-operative, cheerful, and good-natured with both fellow employees and superiors, even in the face of discouraging circumstances.

19. Study carefully all company rules and encourage fellow workers to do the same.

20. Keep up-to-date by frequent reviews of your Reference Set and school notes, reading good electrical books, and subscribing to one or more good trade journals or electrical magazines.

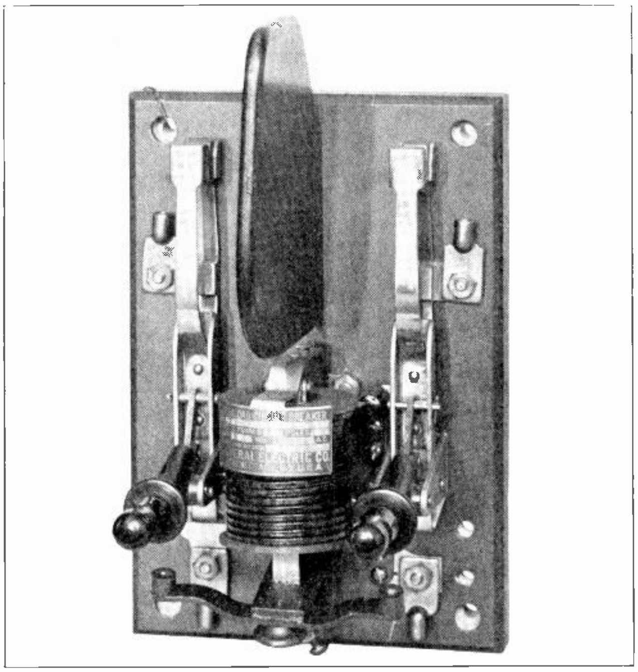

Fig. 420. Small air circuit-breaker for use on circuits of 600-volts and loads up to 100 amperes. Note the flash barrier placed between the two poles of the breaker. Courtesy of G. E. Company.

400. CIRCUIT-BREAKERS

A. C. circuit-breakers are constructed very much the same as those used for D. C. circuits, except for the difference in the number of poles and a slight difference in the construction of their operating coils.

Ordinary air circuit-breakers are frequently used on A. C. circuits ranging from 110 to 600 volts, but on higher voltage circuits carrying heavier currents in large substations or power plants, oil switches are generally used because they are much safer in operation and more effective in quickly interrupting high-voltage circuits.

Fig. 420 shows a single-phase, 100-ampere, 600-volt, A.C. circuit-breaker. Each of the two poles is equipped with main contacts and auxiliary arcing contacts, as previously explained for D.C. breakers. The flash-barriers shown between the tops of the two contactors are for the purpose of preventing flashovers between the two poles of the breaker when an arc is drawn in interrupting heavy current overloads in the circuit.

The series overload trip-coil and hand-trip button can be clearly seen in this photo. The small adjusting device is provided underneath the trip coil for setting the amount of load on which the breaker will trip open.

Fig. 421 shows a 500-ampere, 250-volt, three-phase A.C. circuit-breaker. This breaker has three poles, one for each phase; and two overload trip coils, one of which is placed in each of the outer phase wires.

Circuit-breakers of this type can be equipped for instantaneous opening or with time-delay devices in the form of dash pots or bellows on their tripping mechanisms.

The care of A.C. breakers is similar to that of those used for D.C. in that the contacts should be kept tight and in good condition, operating springs in good condition, and overload adjustment properly made to give desired protection to the equipment on the circuits in which the breakers are installed.

401. OIL SWITCHES

Oil circuit-breakers consist of breaker contacts which are operated under oil within a metal tank. The great advantage of breakers of this type lies in their greater safety and their ability to quickly interrupt high-voltage circuits because of the action of the oil in quenching out the arcs at the contacts as they are opened underneath the oil.

As soon as the switch is opened the insulating oil immediately flows into the space between the movable and stationary contacts and snuffs out the arc. This preserves the life of the contacts by preventing them from being so severely burned by the arc; helps to obtain speedy circuit-interruption in case of overloads, thus providing better protection for the equipment on the circuits; and greatly increases the safety

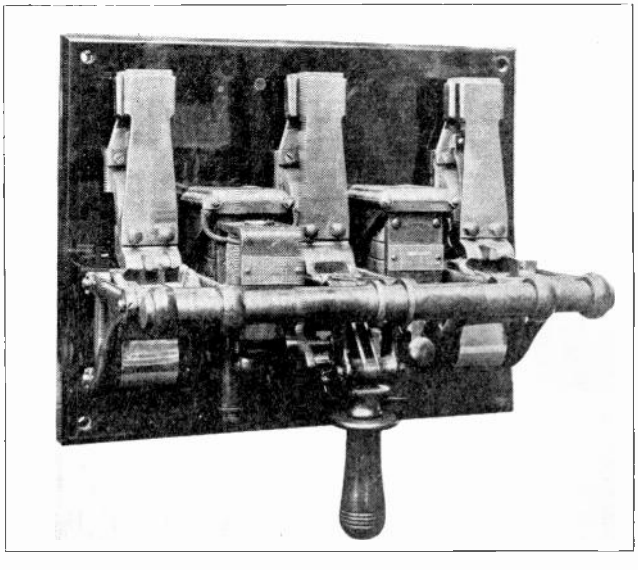

Fig. 421. Three-pole, 500-ampere, 250-volt A. C. air-breaker. Note the intermediate and arcing contacts and also the series overload trip coils. Courtesy of G. E. Company.

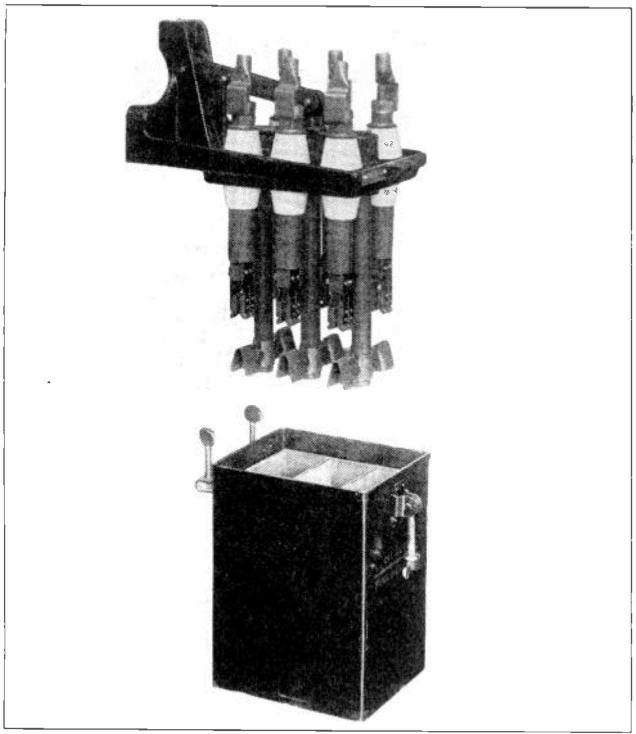

Fig. 422. View of a three-pole, 3300-volt, 200 ampere oil switch with oil tank removed to show contacts. Courtesy of G. E. Company.

of operators because the circuits are interrupted within the metal tank.

For this reason, oil circuit-breakers are used on practically all A.C. circuits of 2300 volts or over.

Fig. 422 shows a small oil switch for use on three-phase circuits of not over 3300 volts and 200 amperes capacity. The switch mechanism is shown removed from the tank in this view, so that the stationary and movable contacts can both be clearly seen. The stationary contacts are supported by the insulating bushings through which the conductor leads are run. There are six of these bushings and terminals, and the line enters, through the three on one side and leaves through the three on the other side.

The movable copper contacts, which are in this case shown dropped down or opened, are supported by the wooden insulating rods which are attached to the operating mechanism and lever on top of the switch. When these contacts are drawn up they press tightly into the spring fingers of the stationary contacts, thus making a good low-resistance connection. When the movable contacts are dropped they open the circuit in two places in series in each phase, thus very effectively interrupting the current flow.

Small oil switches of this type are generally manually-operated by handles or levers placed on the front of the switchboards or panels, as shown in Fig. 415. In some cases it is desired to locate the oil switches a few feet back of the switchboard, or perhaps behind the wall in another room. In this case they can still be operated by remote mechanical control through a system of bell-cranks and rods, as shown in Fig. 422-A.

Oil switches should not be used in circuits with greater current loads than the capacity for which the switch is designed, and for effective operation and long life the contacts should be kept in good condition and the oil renewed frequently enough to maintain good insulating properties.

When oil switches are tripped open under heavy overloads or short circuits the contacts are likely to be burned to a certain extent in spite of the quality of the oil. This means that the contacts should occasionally be inspected and reserviced or replaced with new contact shoes or fingers when necessary.

The tank for the oil switch shown in Fig. 422 is provided with a set of inner barriers made of insulating and fire-resisting material. These barriers separate the oil into three different wells or cells in each of which a set of contacts is placed. This tends to prevent flashovers between phases when the switch is opened.

You will note that the tank can easily be removed to provide convenient inspection and care of the contacts as well as easy renewal of the oil.

Fig. 423 shows a larger view of a set of stationary and movable contacts for a manually-operated oil switch. This view shows clearly the manner in which the contacts can be removed for replacement by merely loosening the proper bolts and nuts.

The view at the upper left in Fig. 424 shows the operating mechanism of a three-phase oil switch of somewhat different construction from the one in Fig. 422. In this switch the main movable contact is made of a number of thin strips of copper arranged in a leaf construction that provides a good-

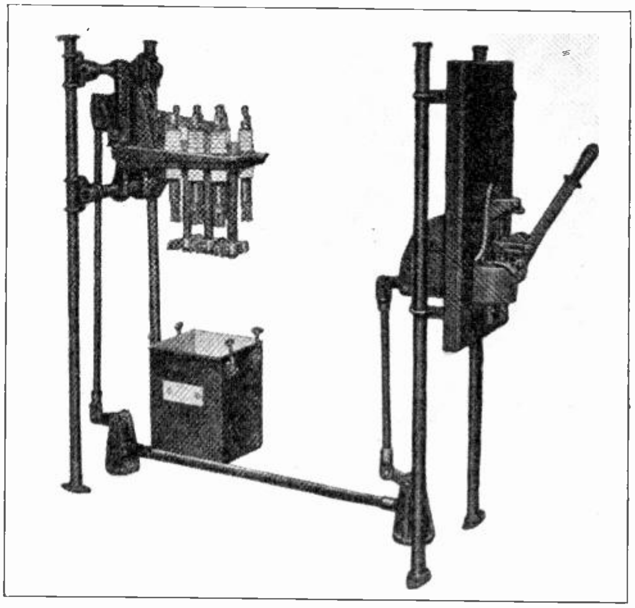

Fig. 422-A. This figure illustrates the method of obtaining remote mechanical control for an oil switch located several feet back of the switchboard. Courtesy of G. E. Company.

fitting, low-resistance contact with the stationary contact surfaces. The movable contact is also equipped with renewable arcing tips on each end. These arcing tips open last and the arc is therefore drawn from them, thus preventing the burning of the main-contact tips.

The view on the upper right in Fig. 424 shows an enlarged view of one set of these contacts in fully-closed position. At the lower left in the figure the contacts are shown partly opened; the main contact element having broken away from the stationary surfaces, leaving only the arcing tips in contact. At the lower right the switch is shown fully opened.

402. HEAVY-DUTY OIL SWITCHES

High-voltage, heavy-duty oil switches are usually made with each set of contacts enclosed in a separate oil tank, to avoid all possibility of flashover between phases when the circuit is interrupted.

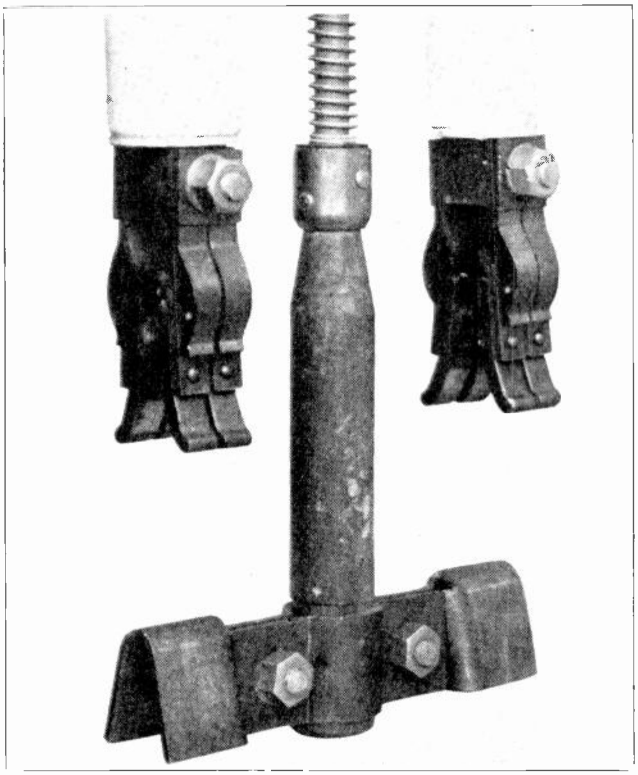

Fig. 423. Close-up view showing the details of construction of stationary and movable contacts of an oil switch. The upper stationary contacts are supported on porcelain bushings and the lower movable contact on a wooden insulating rod. Courtesy of G. E. Company.

Fig. 425 shows a 15,000-volt, 400-ampere, three-phase oil switch of this type, with the oil tank removed from the right-hand set of contacts. This view shows clearly the porcelain insulating bushings with the conductor terminals attached to their top ends and the stationary switch contacts attached to their bottom ends.

All three of the movable contacts can be moved at once by means of an operating shaft and lever, which are also shown in this figure.

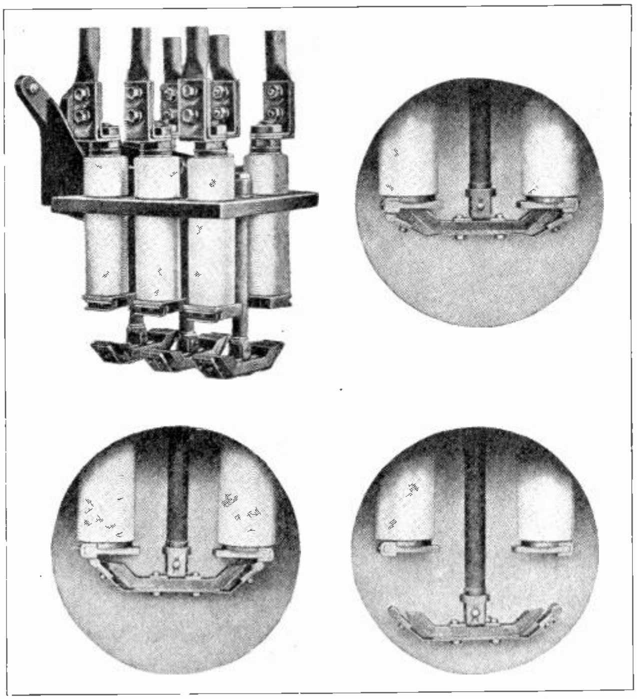

Fig. 424. At the upper left is shown the mechanism of a different type oil switch, and in the the three other views are shown the steps or movement of the contacts during the opening of a switch of this type.

Indoor-type oil switches used in power plants and high-voltage substations often have their separate phase units built into regular fireproof concrete cells or compartments, as shown in Fig. 426. This serves as additional protection to operators and also against interference with other circuits in the plant in case of a defect in or explosion of one of the oil switch units. It also makes convenient the connection of high-voltage conductors, which are also very often run through fireproof concrete ducts and cells throughout the plant.

The switch shown in Fig. 426 is of the remote-controlled, motor-operated type. The motor shown on top of the switch unit drives a gear which closes the switch and winds the heavy coil springs at the

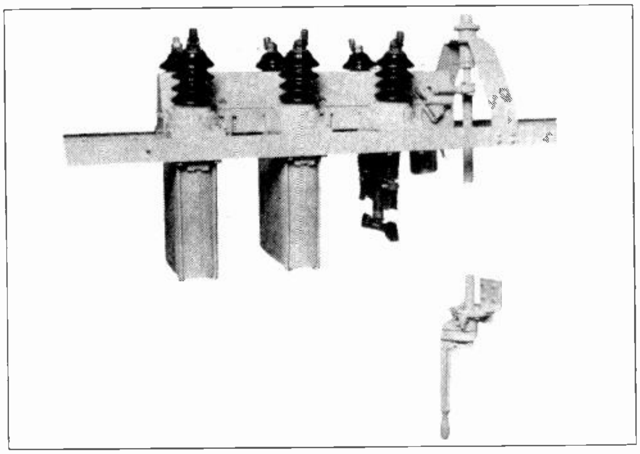

Fig. 425. 15,000-volt, 400-ampere, triple-pole oil switch with one tank removed. Note that the pole elements of this switch are each enclosed in a separate tank. Courtesy of G. E. Company.

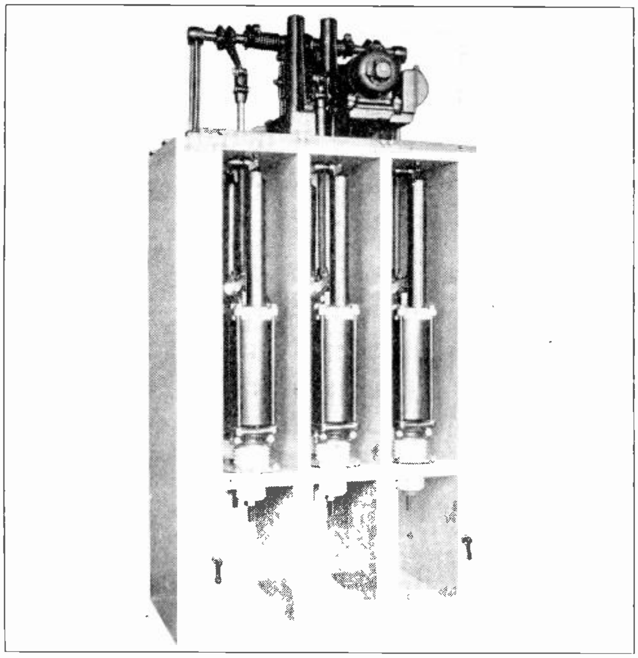

Fig. 426. Modern three-pole oil switch with expulsion type contacts and with pole units located in separate cells or compartments. Courtesy of G. E. Company.

same time. When the switch is tripped these coil springs quickly open the contacts.

Fig. 427 shows a huge outdoor oil-switch designed for operation in a three-phase, 150,000-volt circuit and to carry a load of 600 amperes. This switch has an interrupting capacity of 1,500,000 kv-a. in case of severe overloads or short circuits on the transmission line in which it is installed.

Fig. 414 shows a large group of 220,000-volt oil switches. Practically all of these large type oil-switches are operated automatically by motors or powerful solenoids.

In addition to the ordinary movable and stationary contacts operated under oil, some oil switches have contact prongs which open the circuit within an expulsion chamber. In switches of this type the gases created by the arc are temporarily confined within a special chamber and then blown violently out through a small opening through which the movable contact rod is withdrawn as the switch opens. The oil and gas which are forced out through this small opening quickly snuff out the arc.

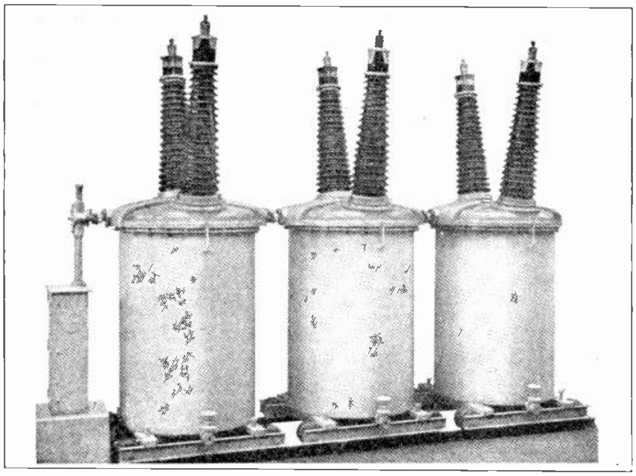

Fig. 427. Large outdoor oil switch for use in three-phase, 150,000-volt circuits. Courtesy of Condit Electric Mfg. Co.

On the left in Fig. 428 is shown a sectional view of one type of expulsion chamber for an oil switch of this type. In the center is a sectional view of a complete expulsion-type oil-switch with a slightly different chamber, and on the right is a view showing this switch in action just as the circuit is being opened.

A recent development in connection with oil switches is the use of deion grids on the stationary contacts and immersed in oil, to help extinguish the arc more quickly. These deion grids were previously described in the Section on Controllers. Fig. 428-B shows the inside of a large oil switch equipped with deion grids which can be seen on the lower ends of the stationary contacts.

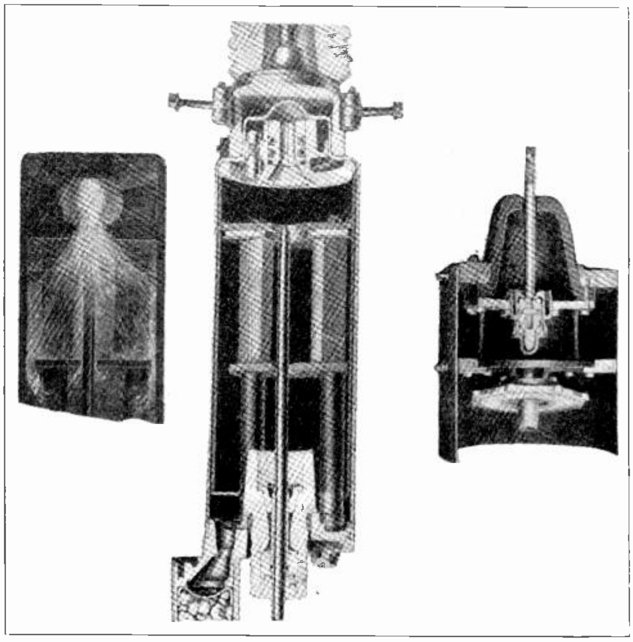

Fig. 428. The above views show two types of expulsion contacts used in modern oil switches and also one of these contacts in action opening a circuit.

Oil switch tanks should be thoroughly grounded to prevent the possibility of shocks due to leakage through their insulation, or due to capacity charges which may be built up on the tanks of high-voltage breakers.

The tanks of oil switches should also be provided with some small opening or vent to allow the escape of gases generated within the tank by the arcs when the circuits are opened. Very heavy arcs may generate considerable gas when the circuit is required to open under heavy short-circuits.

In addition to their use in substations and power plants oil switches are also used extensively for starting large high-voltage motors.

The operator who has charge of oil switches should always see that they are well filled with clean oil of the proper insulating quality; keep the insulating bushings clean by brushing or wiping them off with a brush or mop with a long wooden handle; and keep the contacts in proper condition and repair.

When performing on oil switches any work that involves the possibility of the operator's coming in contact with live parts, the switch should first be completely disconnected from the line by means of disconnect switches on either side of the oil switch. It is also a good added precaution to thoroughly ground the oil switch terminals.

403. HIGH-TENSION AIR-BREAK SWITCHES

Disconnect switches are used extensively both on inside busses in power plants and in outdoor substation structures. High-voltage air-break switches are also commonly used in outdoor switching and substation structures. Ordinary disconnect switches generally consist of a hinged blade and clips mounted on the proper insulators for the voltage of the line on which they are to operate.

Fig. 428-B. This unique photograph clearly shows the inside of a large high-voltage oil switch equipped with Deion grids on the stationary contacts. Note the size of the contacts, insulators, and tanks required for handling the currents of high-voltage power lines. Courtesy of Westinghouse Elec. & Mfg. Co.

Two switches of this type are shown in Fig. 429. You will note that the blades have eyes or holes at the top ends so that they can be operated by wooden switch sticks, or poles which have a small metal horn that can be placed in the eyes of the switchblade to pull it open.

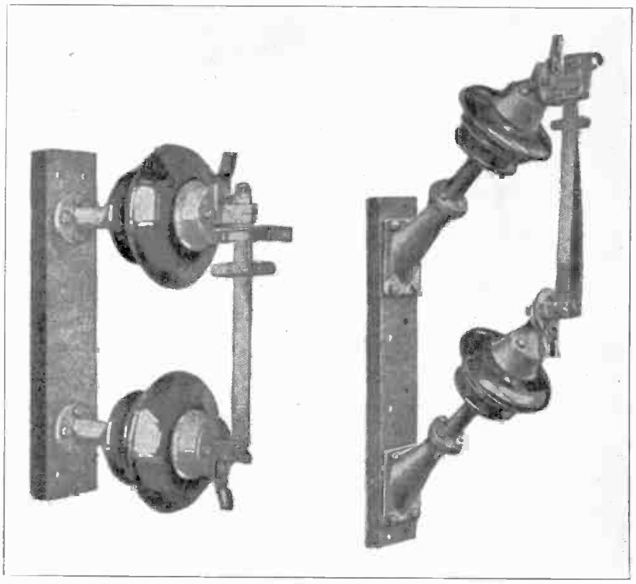

Fig. 429. Two types of disconnect switches for operation by means of a switch hook or pole having an insulated handle.

Disconnect switches of this type should never be used to open a circuit under load but should be opened only after an oil switch in series with them has opened the circuit and interrupted the current flow to the principal power load.

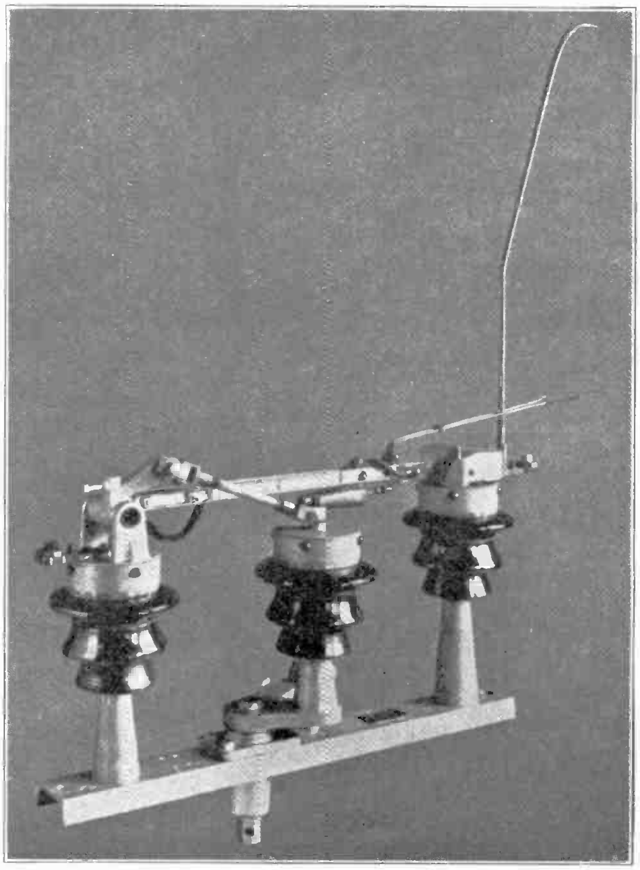

Fig. 430. High-voltage air break switch for pole top mounting or use in substation structures. Note the arcing horns used to prevent pitting and damage to the switch contacts. Courtesy of Hi-Voltage Equipment Company.

The disconnect switches can then be opened by means of the safety stick to completely disconnect the oil switches, lightning arresters, instrument transformers, and other equipment from the line.

Both of the switches shown in Fig. 429 are for 300-ampere, 37,000-volt circuits.

Special high-voltage air-break switches are made to open line circuits under load. These switches are generally equipped with arcing horns to carry the arc away from the current conducting blades and contacts as soon as the switch is opened.

The movable blades of air-break switches are often equipped with springs which snap them open quickly when the operating handle is moved.

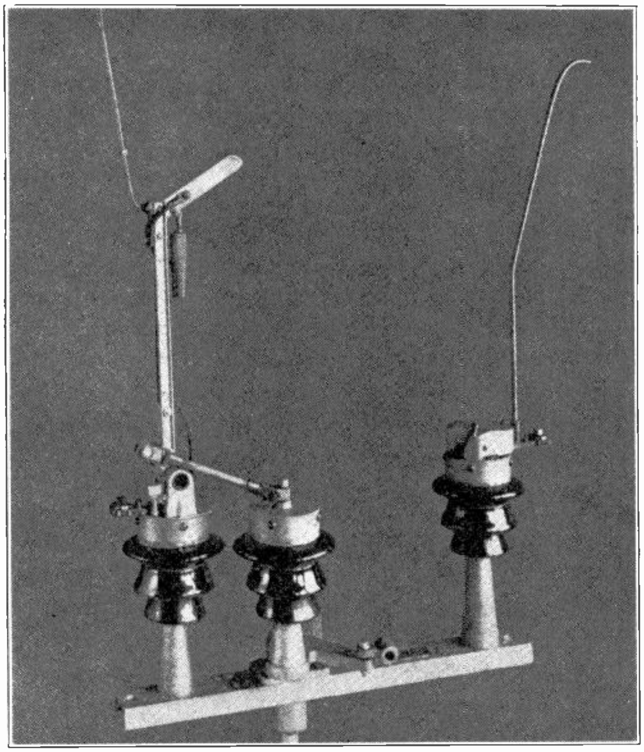

Fig. 431. This is another view of the same air break switch shown in Fig. 430. In this figure the switch is shown open. Note the movement of the center insulator by comparing the two views. Courtesy of Hi-Voltage Equipment Company.

Fig. 430 shows a switch of this type in closed position. Note the large vertical horn attached to the stationary clip and the small horns attached to the movable blade.

Switches of this type can be mounted on the tops of poles or on the steel frameworks of substation structures and operated by a long shaft running down to a handle within reach of an operator on the ground.

The switch in Fig. 430 is opened by rotating the center insulator, causing it to push on the small rod attached to the hinge of the movable switch blade and thus snap the switch open. Fig. 431 shows the same switch in open position.

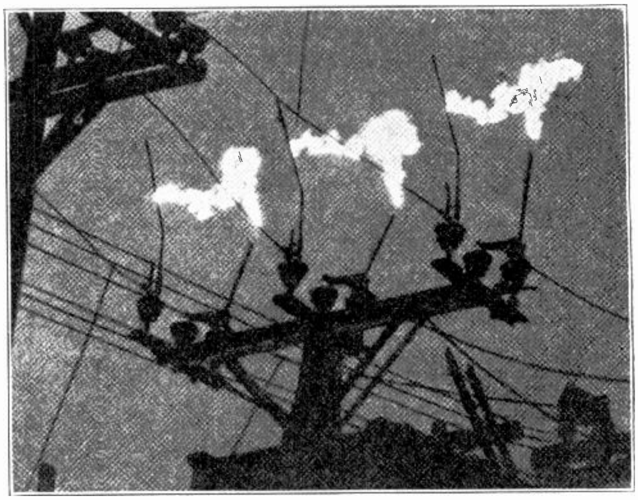

Fig. 432. This night photo of an air break switch opening under load shows the arcs which are drawn from the arcing horns just as the switch opens. Courtesy of Hi-Voltage Equipment Company.

Fig. 432 shows an air-break switch mounted on the top of a pole and being opened after dark. The long arcs which are drawn from the horns when the switch interrupts the load current of the high-tension line can be clearly seen in this view.

Fig. 433 shows a one pole unit, heavy-duty, 600-ampere, air-break switch of somewhat different construction from those in Figs. 430 and 431. This switch is for use in a 120,000-volt circuit.

When the insulators at the right are rotated either by a motor or hand crank the long tubular blade is quickly raised, thus opening the circuit. When the movable blade is connected to the live incoming line and the stationary clip connected to the substation equipment, the grounding blade which is clearly shown in this view can be swung up to the ground clip after this switch has been opened, thus grounding the dead end of the line for safety to operators who may be working on the equipment attached to it.

Fig. 434 shows the three pole units of another type of air-break switch for 150,000-volt line. The blades of this switch are flat and are rotated in a

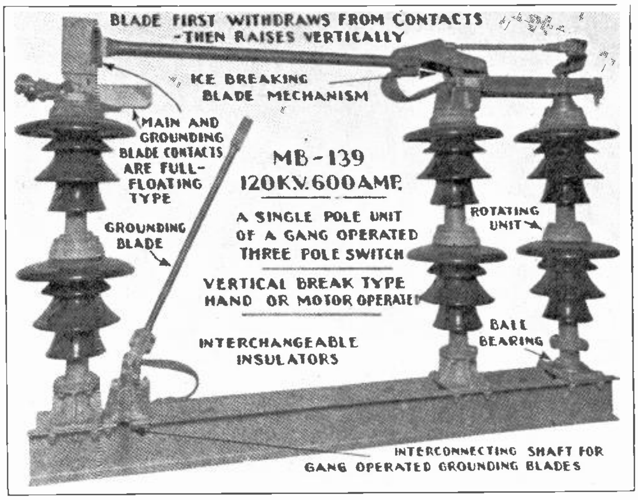

Fig. 433. Single pole unit of 120,000-volt, 600-ampere air-break switch with auxiliary grounding blade. Note the description of the various parts in this figure. Courtesy of Delta-Star Manufacturing Company.

horizontal position by turning the movable center insulators.

Most air-break switches are designed so they can be opened even when coated with ice. To make this possible the mechanism is usually arranged so that the blade first makes a short twisting or lengthwise pulling movement to break loose or shear any coating of ice which may be over the contact and clips. After this first shearing movement the blade swings freely into open position.

404. HIGH-TENSION FUSES

It is often desirable to protect small transmission lines or branch lines which run off from main lines from local overloads so that these overloads will not affect the entire line and system.

Special high-tension fuses for mounting on the tops of poles or towers have been designed for this purpose and serve to quickly disconnect a branch or section of the line in case of severe overloads, short circuits, or insulator flashovers caused by lightning.

Fig. 435 shows an expulsion-type of high-tension fuse. This fuse has a small tube or barrel like a gun, into which is fastened the piece of lead fuse wire shown protruding from the right-hand end. When the fuse blows this tube, the gases formed by the arc quickly blow the remaining end of the fuse away from the end of the tube and actually blow out the arc, thus interrupting the line circuit.

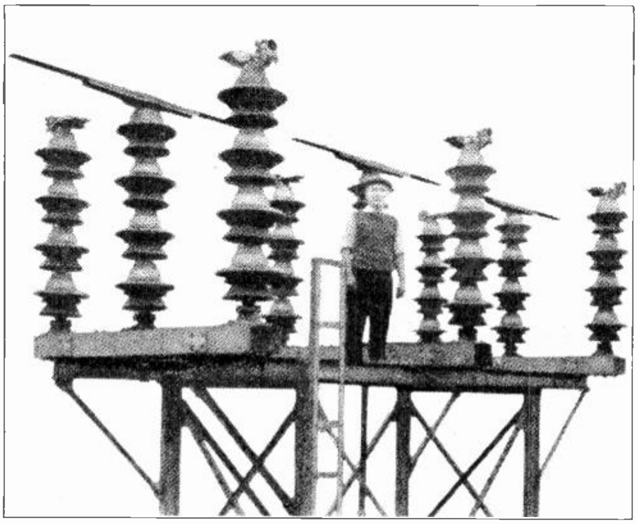

Fig. 434. Three-pole air break switch for use on 154,000-volt, three-phase lines. Note the rotating blades which are shown in open position in this view. Courtesy of Delta-Star Mfg. Co.

Fig. 436 shows a photograph of a set of these fuses mounted on top of a pole and just in the act of blowing and opening a heavy short circuit.

Another type of high-voltage fuse which is very extensively used has a fusible strip and long coil spring enclosed in a glass tube which is filled with arc-extinguishing fluid. This fuse is so designed that when in normal condition the spring is held under tension, and when the fuse strip melts due to an overload, the spring is released and quickly draws the lower arcing terminal downward, thus making a long gap which tends to extinguish the arc.

As the spring moves downward it also moves a liquid director or plunger which compresses the liquid in the tube and squirts it through an opening in the plunger and directly into the arc, thus effectively extinguishing it.

Fig. 436-A shows a diagram of a fuse of this type, in which all the essential parts can be clearly seen. Note the coil spring and the flexible copper cable which carries the current, and also note the liquid director attached to the arcing terminal at the upper end of the spring.

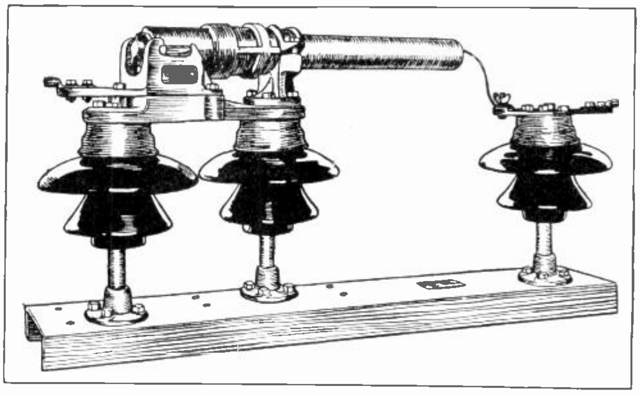

Fig. 435. Expulsion type high-voltage fuse. The fuse strip is violently blown out of the tube or barrel, thus quickly interrupting the circuit when this fuse blows. Courtesy of Hi-Voltage Equipment Co.

The spring is normally held extended by a small piece of strong tension wire that is connected in parallel with the fuse strip, but when the fuse strip blows the current load is shunted through the tension wire causing it to melt and release the spring.

Fig. 436-B shows a photo of a complete fuse of this liquid-filled type in the view on the left. The top center view shows one of the fuses after it

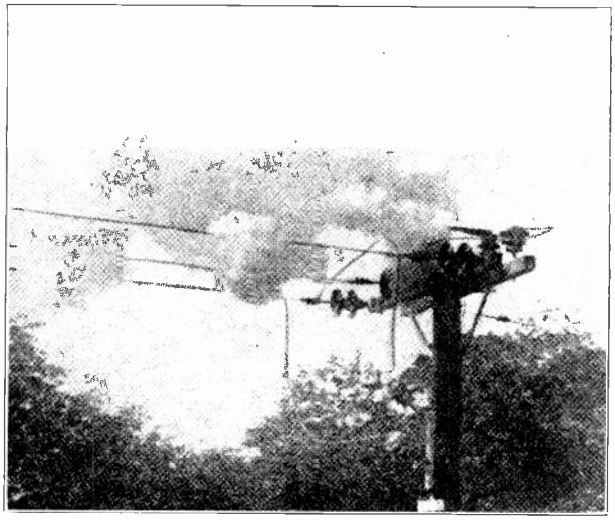

Fig. 436. This unusual photo shows a set of high-voltage fuses mounted on the top of a pole, at the exact instant of blowing or opening the circuit. Courtesy of Hi-Voltage Equipment Co.

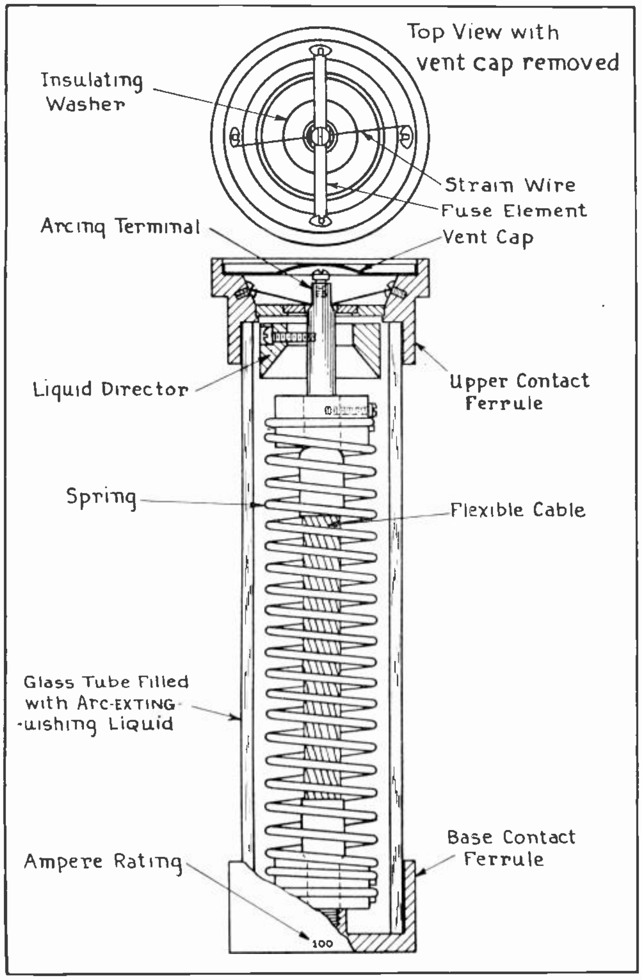

Fig. 436-A. The above sketch shows the principal parts of a high-voltage fuse of the liquid filled type. Examine each part carefully and compare with the explanations given on these pages. Courtesy of Schweitzer & Conrad, Inc.

has blown and the spring has drawn down and broken the arc.

The lower center views show two types of clips in which the fuses are mounted and locked by the clamping rings.

On the right are shown two views of such fuses equipped with weather-proof housings for outdoor use and for convenient mounting on poles or substation structures.

One of the great advantages of these fuses is that they will open the circuit, extinguish the arc, and clear an overload or short circuit in from ½ to 1½ cycles.

They are made in sizes from ½ to 400 amperes and for voltages from 2200 to 138,000.

The fuse is provided with a vent cap to allow the escape of the gases formed by the arc when the fuse blows, and thus prevent damage to the tube.

These fuses can be refilled at a nominal cost by returning them to the manufacturer after they have blown.

Fig. 436-C shows two types of wooden fuse tongs for removing and replacing high-voltage fuses, and also a switch hook for opening and closing disconnect switches.

Oil switches and disconnect switches in the circuit should always be opened before removing or replacing fuses, in order to avoid drawing arcs at the fuse ferrules and clips.

405. A. C. RELAYS

There are a number of different types of A. C. relays in common use in alternating current power plants and substations. Keeping in mind at all times that any relay is simply a magnetically operated switch, it is comparatively easy to understand their operation and care, as well as their purpose in the circuits in which you may find them.

A. C. relays are used in many of the same ways as the D. C. relays which were explained in an earlier section.

Some relays are designed to operate whenever the voltage of certain circuits to which they are connected becomes too high or too low. Such relays are known as over-voltage or under-voltage relays, and are sometimes called potential relays. They are connected across the phases of low-voltage A. C. circuits or to the secondaries of potential transformers which are connected to the high-voltage A. C. circuits.

Current relays are designed to operate whenever the current in certain circuits falls below or rises above a certain value for which the relay is set. These relays are generally operated from the

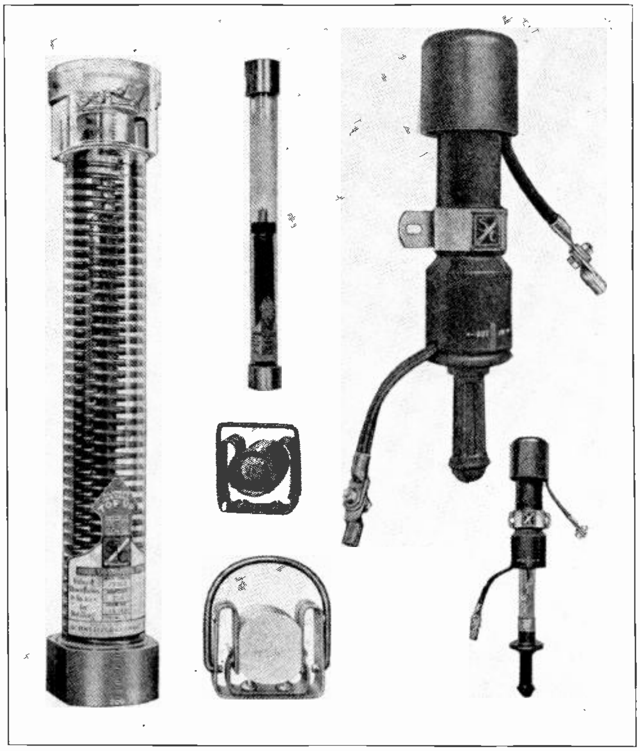

Fig. 436-B. The above views show high-voltage fuses of the liquid filled type both in normal and open condition, and also shows clips for mounting them. On the right are fuses of this type in waterproof housings for outdoor use. Courtesy of Schweitzer & Conrad, Inc.

secondaries of current transformers, as the relay itself is usually a rather delicate device and is not designed to carry much current.

Current relays are often called overload or underload relays, according to the use for which they are intended.

Many relays are designed with very small contacts which are intended only to make or break the circuits to the coils of heavy-duty relays. These main relays in turn operate heavy contacts which open or close the circuits to large oil switches of the solenoid or motor-operated type.

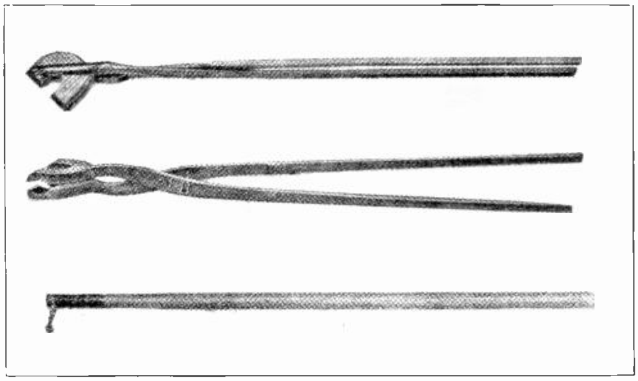

Fig. 436-C. At the top are shown two wood handled fuse tongs for removing and replacing high-voltage fuses, and below is shown a wood handled switch stick or pole for operating disconnect switches. Courtesy of Schweitzer & Conrad, Inc.

Fig. 437 shows a high-voltage cut-out relay. The operating coil, movable contacts, and relay adjustment screw can be clearly seen in this view.

Fig. 438 shows a solenoid-operated instantaneous overcurrent relay, with the cover removed from the contacts. The solenoid coil is in the casing to which the name-plate is attached, and the plunger adjustment by which the relay can be set to trip at various loads is shown at the bottom of the device. Relays of this type can be made to open or close one or more circuits, as desired.

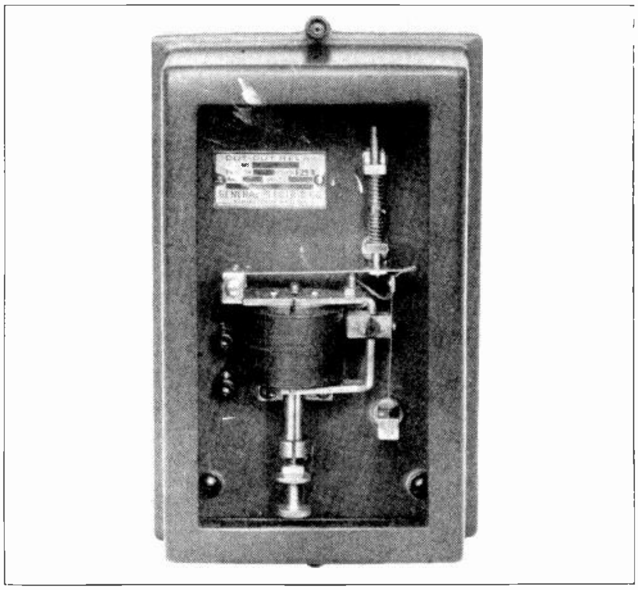

Fig. 437. Photo of a high-voltage cutout relay clearly showing the coil and contacts. Courtesy of G. E. Company.

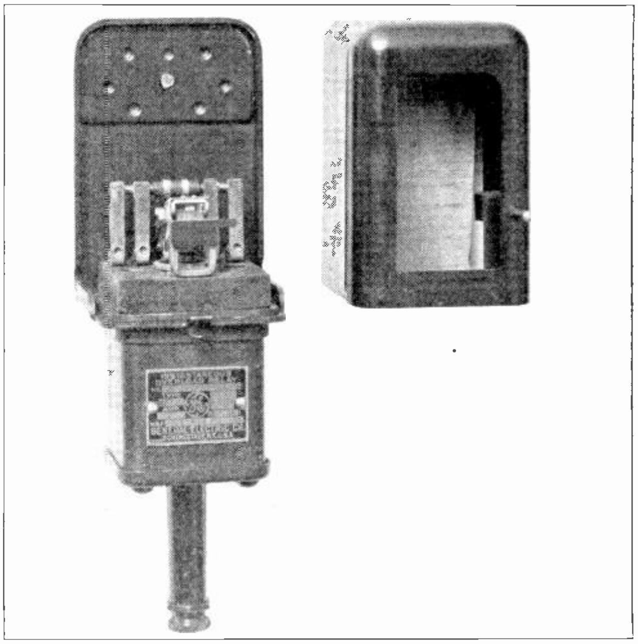

Fig. 438. This view shows an instantaneous operating overcurrent relay with contacts for closing three circuits. Courtesy of G. E. Company.

Many relays of the magnet or solenoid-operated type are instantaneous in their action or, in other words, they are designed to operate and close their contacts immediately, as soon as the voltage or current reach the values for which the relays are set.

Other relays are equipped with time delay devices, such as oil dash-pots or air bellows, so that they can be adjusted to open or close a circuit, provided the overload or excess voltage for which they are set remains on the circuit for a period of several seconds.

The purpose of relays of this type is to protect equipment from continued overloads or undesirable conditions, and yet not to trip out the breakers and interrupt the service on momentary overloads which would do the machines no harm.

An **inverse time delay relay** is one on which the period of time delay is inversely proportional to the amount of overload. In other words, the greater the amount of overloads the shorter will be the time delay and the quicker the relay will act to open and protect the circuit.

Great numbers of relays of different varieties are used in performing the various operations in automatic substations and power plants.

Fig. 439 shows an A.C. overload relay of the induction type. This relay operates on very much the same principal as an induction watthour meter, and has a disk in which eddy currents are induced by the current flowing through its coils. The movement of the disk is retarded by a spring which holds it in normal position during normal conditions on the circuit.

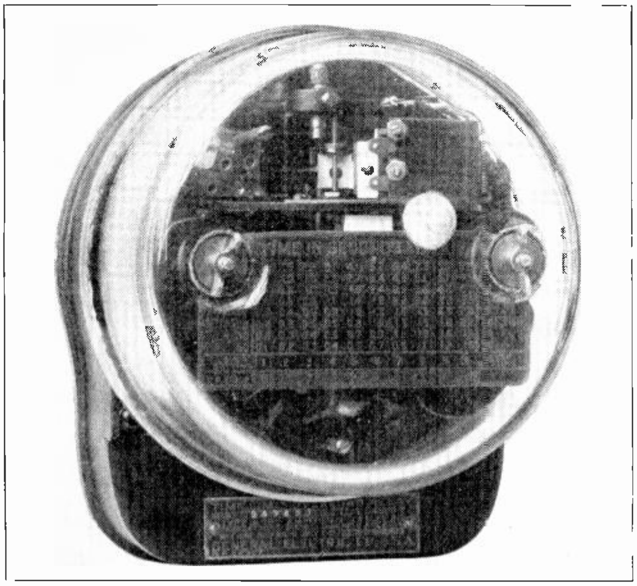

Fig. 439. Modern induction type overload relay such as very extensively used in A.C. power plants and substations. Courtesy of G. E. Company.

In case of overload the increased current increases the torque on the disk, causing it to turn slowly until a small lug or projection is rotated around to where it opens or closes the relay contacts.

By setting these relays so that the disk must rotate a smaller or greater distance before closing the contacts, the time-delay of the relays can be adjusted over quite a wide range. This is one of the very popular types of modern relays.

Fig. 440 shows a reverse-power relay which is used to operate circuit breakers in case the power flow on A.C. circuits is reversed in direction. This may at first seem queer to you, since you know that A.C. is constantly reversing in direction.

However, as long as power is flowing in one direction in an A.C. circuit, the voltage and current bear a certain phase relation to each other; while if the power flow reverses because of some fault on the line, the voltage and current will then have opposite phase relations to each other.

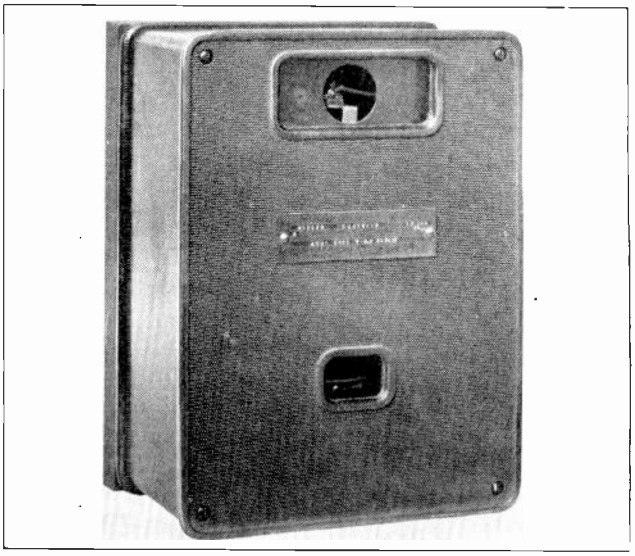

Fig. 440. Photo of a polyphase reverse-power relay for A. C. circuits in substations and power plants. Photo Courtesy of G. E. Company.

Reverse-power relays have both current and potential coils, which hold the relay disk in normal position as long as the power flows in the right direction; but as soon as the direction of power flow reverses, the relay disk starts to rotate and closes the contacts which operate the circuit-breakers.

Automatic substations and power plants use numerous relays of various types, to start and stop the machines and perform various switching operations either entirely automatically or by remote control from a master operator or load dispatcher at some other station.

Always be on the alert for opportunities to provide better protection for electrical machines, and to secure more economical operation of them by the application of the proper relays.

INSTALLATION AND MAINTENANCE

A certain amount of instruction has been given on the Care and Maintenance of various pieces of electrical equipment in the sections of this Reference Set in which they were described, and a great deal of the material covered in the section on Electrical Wiring can be applied to the installation of electrical machinery.

However, there are certain general important items pertaining to the installation and maintenance of elecrical equipment that can well be emphasized and explained in detail in this section, now that you are familiar with the various types of machines and their uses.

Proper installation of electrical motors, controllers, generators, transformers, instruments, and other equipment is very necessary to secure the best operation and to avoid frequent and costly shut-downs and repairs after the devices are in service.

406. GENERATORS AND MOTORS

When installing electrical generators or motors of any size, care should be taken to see that they are mounted upon rugged and secure foundations to prevent vibration and trouble with misalignment of shafts and belts. Very large machines of this type are practically always fastened to solid concrete foundations, and for the largest types of power plant generators these foundations are usually reinforced with steel.

Medium sized motors and generators can be mounted upon wooden beams or bases and securely fastened to them by means of lag screws or bolts of the proper size. The bases in turn can be mounted on the floor of the building in which the machines are used.

In some cases small or medium sized motors are mounted on substantial brackets on factory walls or columns, or even suspended from the ceiling. In such cases particular attention should be given to the fastenings to make sure that they will not pull loose, even after years of operation and the normal vibration to which the motors and belts may subject the fastenings.

It is very important to see that motors and generators are properly leveled to secure even wear on bearings and prevent leakage of bearing oil. In leveling up machines small wedges or shims made of wood, steel, or paper can be used under the feet or bed-plates. Extreme care and accuracy on this point is required in setting very large generators or motors.

Whenever possible, motors and generators should be located away from all moisture and dirt, and in places where they will have free circulation of clean air to carry away the heat the machines develop and not clog the windings with dirt or moisture. If motors must be located in damp places or where water is likely to drip upon them, a cover or small roof of sheet metal, tarpaulin, or water-proof roofing material should be used above them.

407. CONTROLLERS AND SWITCHING EQUIPMENT

Motor controllers should always be mounted on solid angle-iron or pipe-work frames, or parts of the building structure where they are free from excessive vibration from other surrounding equipment and so that they will not vibrate when operated.

Controllers should be placed as near as possible to the motors they operate and yet, in the case of manually-operated controllers, they should be located within most convenient reach of the operators who may have to frequently start and stop the motors.

The tops of controllers should be carefully leveled and the controllers should as far as possible be placed in cool, clean, dry locations.

Controllers and switching equipment should be installed according to the instructions usually provided by the manufacturer and connected according to the diagrams which are also usually supplied.

Small starting switches enclosed in metal safety boxes are generally provided with knock-out openings for the attachment of conduit or BX.

When installing motors, generators, controllers, or any other electrical equipment, the rules of the National Electric Code should be carefully followed. One of the most important of these rules is that the frames of machines and the metal boxes of controllers must be securely grounded to prevent the danger of shock to operators in case of failure of the insulation on some part of the machine windings or connections.

It is generally best whenever possible to have the wires between controllers and motors, and between generators and switchboards, run in either rigid or flexible conduit or approved cable.

On small machines BX is sometimes used for these connections, and in certain types of factory buildings, where it is allowed by the local inspection department, the wiring may occasionally be run open.

Fig. 441 shows a large slip-ring motor and the panel-type controller used with it. Note that in this installation conduit was apparently run through the cement floor at the time the building was erected. These conduits were equipped with the proper outlet fittings and covers so that the cables from the controller to the motor can be neatly installed as shown. Note the drip-shield above the controller, to keep any water from the ceiling from dripping on live parts of this device. The large motor shown in this figure is mounted on a specially-cast iron base which is a part of the machine to which the motor is directly connected.

Fig. 442 shows a motor installation in which the machine is set on wooden beams and securely bolted to them. The leads from the controller are run through rigid conduit up to a point near the motor and then through flexible conduit and the proper fittings to the motor. This keeps practically all wires completely enclosed and is a very good type of installation.

The flexible conduit permits the motor to be moved a slight distance on its bed rails in order to tighten or loosen the belt or chain by which it drives the connected machinery.

Fig. 443 shows another motor installation in which the wires to the controller and motor are brought down from above through rigid iron conduit. Between the motor and controller box is shown a small capacitor or static condenser for power-factor correction. Above the starting box are shown the line switch and push-button control for the motor.

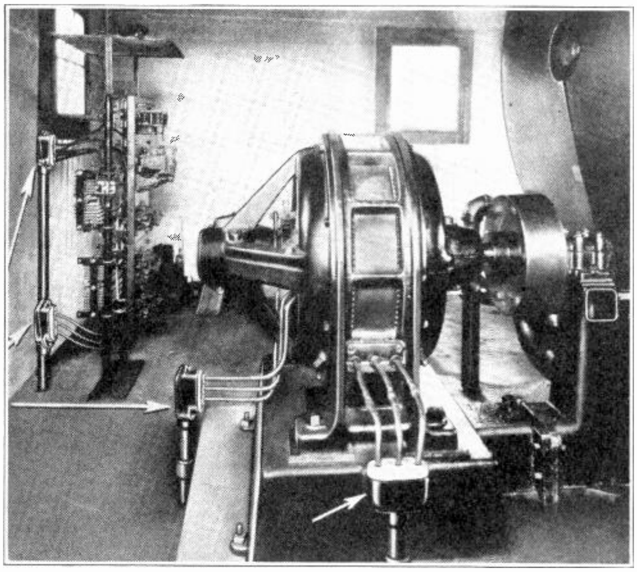

Fig. 441. This photo shows a very neat installation of the wiring to a slip ring motor and its controller. Courtesy of Crouse Hinds Co.

408. CONDUIT AND CONDUCTORS

The section on Electrical Wiring thoroughly covered the methods of installing wiring in conduit and should be carefully reviewed before you install any wiring to motors or power equipment.

Power wiring generally requires much larger conductors and conduit than those used for lighting installations, and a few special features pertaining to this heavier wiring will be repeated here.

In running large conduits from the supply to controllers and motors, the run should be kept as straight as possible, avoiding all unnecessary bends. This will make a neater installation and will greatly facilitate the pulling in of large cables.

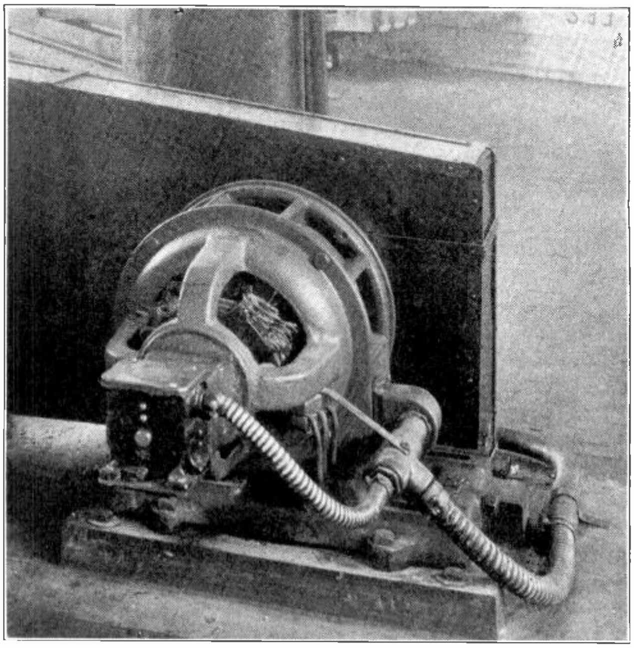

Fig. 442. Induction motor installation, using rigid conduit to bring the wires up to the motor, and flexible conduit to attach to the motor to allow it to be moved slightly for belt adjustment. Courtesy of G. E. Company.

Bends can be made in conduit of from 1 to 4 inches in diameter by means of bending machines, and sizes up to 3 inches can sometimes be bent by bending the length of conduit around a substantial post or part of the building framework. The strength of several men or the use of a block and line may be required to do this and great care should be taken to make the bends smooth and uniform and to avoid crushing or flattening the pipe.

Capping one end and filling the pipe with dry sand and then capping the other end will greatly aid in making bends or offsets without flattening the conduit. It is often necessary to heat large pipes to bend them by hand.

A bend on which the pipe has been flattened even a small amount should be discarded, as it is likely to cause great difficulty when pulling the conductors in. It is usually cheaper and better to buy ready made bends and elbows for large conduit, and the work can also be simplified by the liberal use of proper junction or pull boxes and fittings.

The ends of conduit sections should be well threaded, carefully reamed, and securely tightened into all fittings and boxes. All conduit, whether rigid or flexible, and all BX. runs should be thoroughly grounded.

409. PULLING IN CONDUCTORS

Large wires or cables can be pulled into conduit runs having not more than 4 right-angle bends by the use of steel fish tape or pilot line, as previously explained in the section on Electrical Wiring.

In heavy power wiring a light cord or line is often blown through the conduit by attaching a wad of paper or cloth to its end and applying compressed air behind this at the end of the pipe. This light line is then used to pull through a strong Manila rope or fish tape, or in some cases a small steel cable.

On short runs of small cable one man may be able to pull in the conductors alone, but on longer runs consisting of several heavy cables it may require several men or a block and tackle or even some form of power winch.

Liberal use of powdered soapstone or talc, rubbed on the insulation of the conductors or blown into the pipe will greatly ease the passage of the conductors through the conduit. Never use grease or oil of any kind, as it is injurious to the insulation of the conductors.

Careful and straight feeding of the conductors into the end of the conduit at which they are entering and even steady pulling on the pilot line or fish tape are both of the greatest importance in pulling in heavy conductors. The conductors should be fed in perfectly parallel without allowing them to kink, twist, or cross each other.

Sometimes feeding the conductors through a small piece of thick fibre with as many smooth-edged holes as there are conductors will help to keep the wires straight in feeding them into the conduit.

If conductors become stuck or jammed in some bend of the pipe it is often better to pull them out and start them over again, using more soapstone and keeping them straighter. If too much strain is placed upon them they are likely to be broken or the insulation may be damaged by excessive friction.

In many cases it is necessary to use a large junction box at each corner or turn in the conduit and to pull the wires through one section at a time, looping them back to start in again at each of these junction boxes.

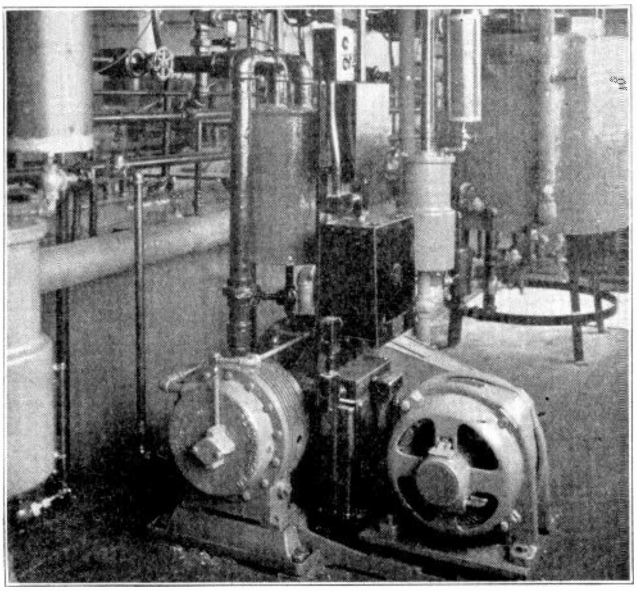

Fig. 443. This view shows a motor, push button control and a static condenser for power factor correction, all wired in conduit. Courtesy of G. E. Company.

All splices in large stranded conductors or cables should be neatly and carefully made and well soldered, or otherwise they may be of high-resistance and overheat when the conductors are subjected to heavy current loads, and this overheating may melt out the solder and burn off the taping, thus causing the cable to become grounded or open.

Never pull a splice of any kind into a run of conduit, but instead see that all splices are made at the proper junction boxes or fittings.

Splices can often be more conveniently made by sweating or soldering copper lugs of the proper size on the cable ends, and then bolting the flat tips of these lugs securely together. Such joints should be thoroughly and carefully taped to prevent the corners of lugs or bolts from puncturing the insulation and grounding a conductor against the junction box.

Where power conductors are connected to machines and equipment, properly soldered cable tip lugs should be used.

In selecting conductors for motors or power equipment of various kinds their current load should be carefully calculated, as previously explained, from the horse power and voltage rating of the machines.

The size of conductors should then be determined by the rules of the National Code and also by the use of the voltage drop formula given in the section on Electrical Wiring.

Conductors should be plenty large enough so they will not overheat or cause too great a voltage drop, which will result in low-voltage at the machines. It is generally much better to have conductors a little too large than to have them under size.

410. TRANSFORMERS

Small power transformers are very commonly mounted on the tops of poles just beneath the line conductors to which they are attached. For mounting transformers in this manner two flat pieces of heavy strap-iron, having square hooked top ends to hang over the cross arms, are used.

Transformer cases are bolted to these strap-iron hooks and hung from the cross arms. When two or more medium or large sized transformers are installed outdoors for lighting service they are frequently placed on a platform supported by either one or two poles, as shown in Fig. 444.

Larger transformers for outdoor use are generally installed on concrete foundations or heavy wooden beams which have been properly treated to resist the action of the weather, and are supported slightly above the ground by blocks or pole stubs.

Transformers which are located down low in this manner should be protected by strong, high, wire mesh fence with several barbed wires around the top to prevent the possibility of shocks to meddle-

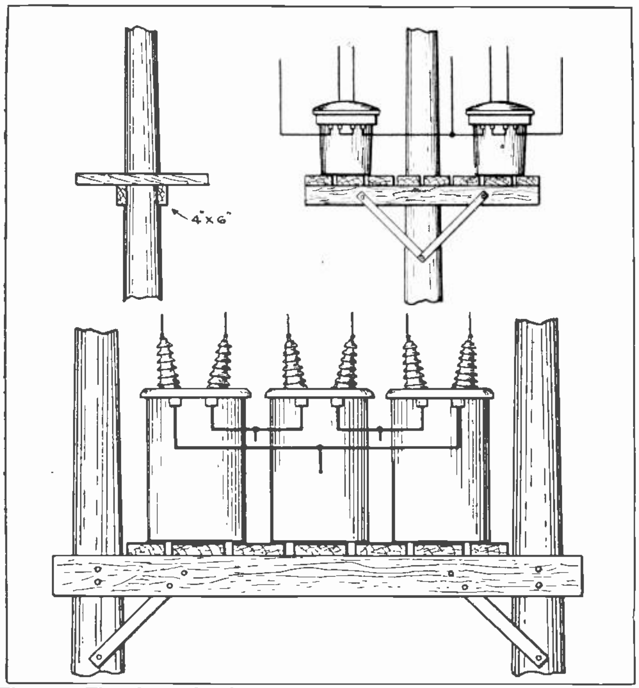

Fig. 444. The above sketches illustrate methods of mounting transformers on platforms on one or two poles.

some or curious people who might otherwise come in contact with some of their high-voltage terminals.

Signs warning of high voltage and danger should also be placed upon the transformers or fence.

Transformers should always be set with their bases level and in positions to allow the best possible circulation of air around them to facilitate their cooling. It is desirable, when possible, to select the shady side of a building for the location of transformers, as this will make a great deal of difference in their summer operating temperatures and efficiency.

Transformers for use inside substations or power plant structures should be provided with plenty of circulating air through the room or vault in which they are located.

On transformers that are air and oil cooled, fans or blowers to circulate air through the room or over their cooling radiators will often assist materially in keeping the transformers operating at proper temperatures.

Transformers which have water cooling coils should have an unfailing supply of cool circulating water at all times.

It is usually best to see that transformers are securely anchored to the floor or platform on which they are mounted, in order to prevent them from slowly creeping out of position due to their own vibration or that of other equipment around them. This is particularly essential with transformers mounted on platforms up on poles.

Connections to both the high-voltage and low-voltage leads of transformers should be made as neatly and symmetrically as possible, and in a manner to facilitate any necessary work or maintenance which may have to be done around the transformers.

Fig. 445 shows a single transformer on the left and a bank of three transformers on the right, suspended from pole cross-arms by means of the mounting hooks previously mentioned.

Fig. 446 shows a bank of three transformers mounted on a substantial platform and supported by two poles. Also re-examine Figs. 124 and 149 in Section Four on Alternating Current.

Where outdoor space is not available, transformers for factories and industrial plants are often located in small fireproof rooms in basements or other parts of the plants. These rooms are commonly known as **transformer vaults.** They should be well ventilated and drained in order to keep the transformers cool and free from water.

Transformer vaults should never be used as store rooms, but should be kept clean and free of obstructions, so that the transformers are accessible for inspection and testing and so that emergency repairs can be made safely and conveniently.

Transformer vault doors should be locked or plainly marked with such signs as "high voltage", "dangerous", "keep out", so that unauthorized workmen other than the electrical crew will be warned against the danger of injury from contact with live wires or connections.

When installing any electrical equipment always remember that work which is neatly, thoroughly, and carefully done will result in a more reliable and efficient installation and in much better satisfaction to your employer or customer than work carelessly done. Make every job of electrical installation or wiring which you may ever do one in which both

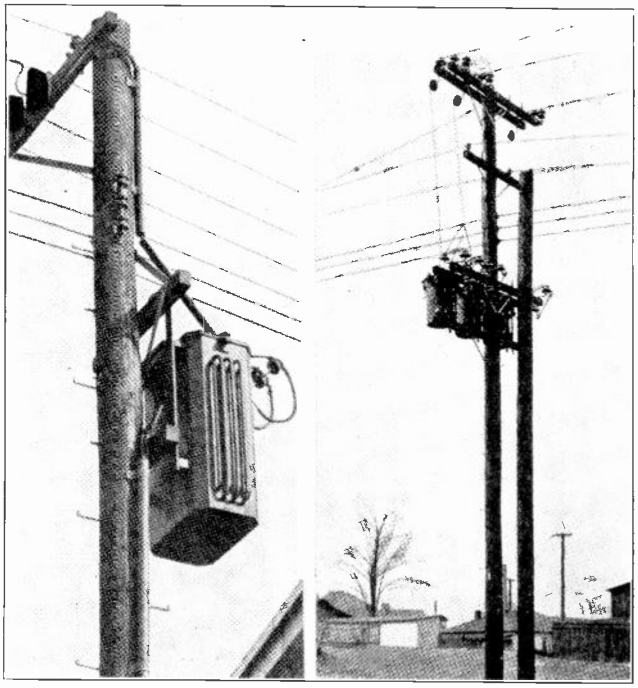

Fig. 445. These photos show transformers supported by heavy iron hooks over the cross arms.

you and your employer can take just pride, regardless of whether it is a small or large installation; and above all else make sure that the wiring and equipment are made as safe as possible from the standpoint of fire and shock hazard.

411. ELECTRICAL MAINTENANCE

The term "electrical maintenance" includes the inspection, care, and repair of all kinds of electrical equipment, and this field forms one of the largest and finest branches of work in the entire electrical industry, providing splendid opportunities for any well-trained electrical man.

The great variety of maintenance work in practically all factories, industrial plants, and office and commercial buildings makes this work very interesting and fascinating.

When we consider that there are several billion dollars worth of new electrical equipment and devices installed every year and that the life of this equipment ranges from 10 to 50 years or more, we can readily see that electrical maintenance is a rapidly growing and expanding field of steady and profitable work.

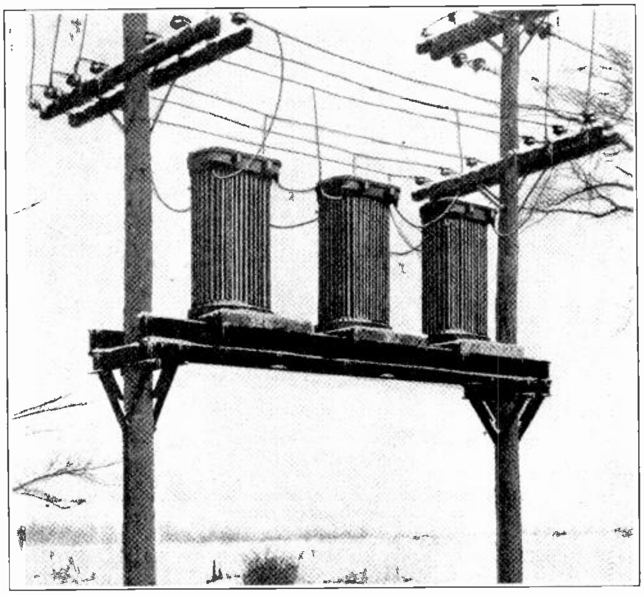

Fig. 446. Bank of three power transformers mounted on a neat platform between two strong poles.

A great deal of instruction has been given on the care and maintenance and also on the trouble shooting and testing of various D.C. and A.C. electrical devices, in the sections in which these devices were separately covered.

There is a certain amount of general information and knowledge which the electrical maintenance man should have, and this material is covered in this section along with the instructions on maintenance and care of A.C. machinery.

In some of the older plants the practice and policy used to be to allow electrical machinery to run with very little care or repair, until it refused to run any longer and required a complete shut down to make the necessary repairs to put it back in operating condition.

In modern power plants and industrial plants this practice has become entirely out of date and the electrical equipment is given frequent and regular inspection, cleaning, testing, and minor repairs to keep it running at the highest possible efficiency and to prevent the necessity of shut downs and loss of time for major repairs which could have been avoided by taking care of the little things in time.

The aim of a successful maintenance electrician should be to keep all of the electrical equipment in his charge in such condition that shut downs and lost time will be at an absolute minimum, and he should try to correct every small defect or fault before it develops into a more serious trouble or causes complete failure of the equipment.

Intelligent employers and owners of large industrial plants realize that shut downs and the tying up of machinery, employees, and production, or the failure of electrical equipment, is very costly and they appreciate and are willing to pay well for the services of a well-trained and capable maintenance electrician.

In some of the smaller or older plants where these facts are not yet fully realized Coyne graduates are frequently stepping in and putting modern maintenance methods into practice, thus convincing the employers of the great savings which can be effected in this manner and creating splendid positions for themselves, even in plants where a regular maintenance electrician was not formerly employed.

412. INSPECTION SCHEDULE AND MAINTENANCE RECORD

In the maintenance of electrical motors and other equipment in large plants it is very important to maintain a regular inspection schedule for all of this equipment and keep notations or records of the results of tests and the conditions of each machine or device upon the date of each inspection period.

These regular, systematic inspections help to catch small troubles before they grow to be large ones; and occasional reviewing of the maintenance records and test data on important machines will often show up approaching troubles far enough in advance so that the machine can be shut down and repaired during some holiday or period when the plant is not in operation, instead of at a time when it is very badly needed.

Inspection periods may vary from daily inspection of very important expensive machinery to weekly or monthly inspection of less important equipment. In some cases certain devices may not need to be inspected more often than once every three to six months.

Experience in various plants will soon show how frequent the inspection of various equipment should be. The following list of items to be checked in connection with the inspection of A.C. motors is given as an example of inspection sheets or schedules which can be developed for various types of equipment throughout any plant.

1. Clean off the motor
2. Check condition of stator windings
    (a) general condition of insulation
    (b) oil soaked coils
    (c) hardened oil or grease on coils
    (d) bare or skinned conductors
    (e) poor taping
    (f) clearance between coils and rotating parts
3. Condition of rotor windings (wound rotors or armatures)
    (Items a, b, c, d, e, f, as above)
4. Bearing-oil level
5. Condition of oil
6. Leakage of oil, if any
7. Free movement of oil rings
8. Condition of oil well covers and drains
9. Condition of bearing dust-seals
10. Tendency of one bearing to heat more than the other
11. Tightness of bearing retaining set-screw
12. Amount of end play
13. Tightness and condition of gear, pulley, key, and key-way
14. Tightness of lugs and connections
15. Tightness of squirrel-cage bars
16. Condition of ground wire and ground connections
17. Tightness of motor on foundation
18. Tendency of motor to vibrate when running
19. Condition of centrifugal switch (if used)
20. Condition of slip rings
21. Condition of brushes and holders
22. Tightness of connections to brushes and holders
23. Check brush setting
24. Slant or angle of brushes with respect to direction of rotation
25. Condition of commutator (on repulsion or series motors)
26. Condition of short-circuiting devices (when used)
27. Investigate any unusual sounds or noises when the motor is running
28. Investigate any local heating of certain coils or groups
29. Note time required for motor to accelerate when starting
30. Tighten all mechanical parts, nuts, bolts, screws, etc.
31. Test insulation resistance of machine windings with Megger or Wheatstone bridge.

In many cases a detailed inspection such as outlined in the preceding list may be made only at intervals of once a month or less often, while more frequent daily or weekly inspection is made of a few more important items.

The most important of these items in connection with A.C. motors are the following: Clean windings, temperature of windings, open air ducts and ventilating ports, condition of insulation on windings, bearing temperatures, condition of bearing oil, free movement of oil rings, etc.

413. INSPECTION RECORDS. AIR GAP MEASUREMENT

A simple form of maintenance record for individual motors is shown in Fig. 447. If a form of this type is used for each inspection of individual motors, particularly on those of the larger sizes, it helps to prevent overlooking certain items of importance and greatly simplifies the keeping of intelligent maintenance records.

The numbers shown in this form refer to the items given in the motor inspection list. The form shown in Fig. 447 has spaces at the top for the description and serial number which identify the machine, so that its monthly maintenance records can be filed together and accurately kept, no matter what part of the plant the machine may be moved to.

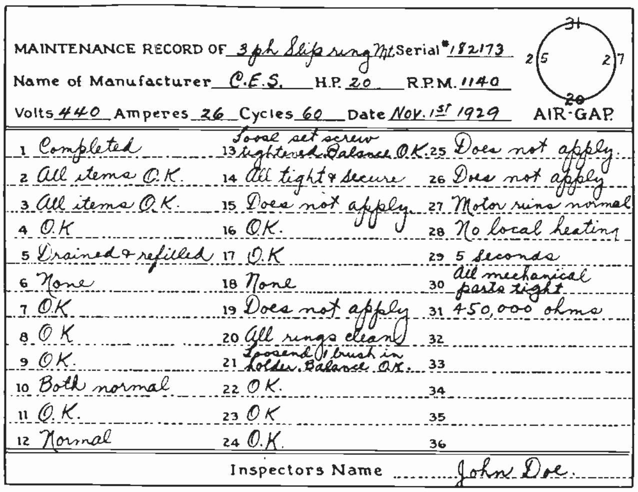

MAINTENANCE RECORD OF 3 ph Slip ring Mt. Serial # 182173
Name of Manufacturer C.E.S. H.P. 20 R.P.M. 1140
Volts 440 Amperes 26 Cycles 60 Date Nov. 1st 1929

1	Completed	13	Loose set screw tightened. Balance O.K.	25	Does not apply.
2	All items O.K.	14	All tight & secure	26	Does not apply
3	All items O.K.	15	Does not apply.	27	Motor runs normal
4	O.K	16	O.K.	28	No local heating
5	Drained & refilled	17	O.K	29	5 seconds
6	None	18	None	30	All mechanical parts tight
7	OK	19	Does not apply	31	450,000 ohms
8	O K	20	All rings clean	32	
9	OK.	21	Loosend 1 brush in holder. Balance O.K.	33	
10	Both normal	22	O K.	34	
11	O. K.	23	O K	35	
12	Normal	24	O.K.	36	

Inspectors Name John Doe.

Fig. 447. Sample of convenient motor inspection chart or form, to be kept in maintenance records.

Note the space provided in the upper right-hand corner of this form for marking the air gap readings. Four of these readings should be taken around the inside of the stator core in the position shown at the top, bottom, and right and left sides of the rotor.

Air gap readings are taken with an air-gap gauge, which is provided with several long, narrow, steel blades or leaves similar to those of a machinist's feeler gauge. Air-gap readings should always be taken when the motor is standing idle. The reading is taken from the largest gauge which can be pushed in between the rotor and stator in the same direction as the slots of the machine run.

Large air gaps may require measuring with two or more blades together, in which case the reading is the sum of the numbers on the blades used to fill the gap.

As an example of the usefulness of inspection records, suppose it is found that on a certain motor the oil level is very low at each inspection, although no definite trace of leakage can be found. This would indicate that the bearing was either leaking a small amount of oil or using it up quite rapidly in some manner and that it should be refilled more often.

Suppose that in another case the inspection record shows a certain section of the stator winding to be slightly warmer than the balance of the winding. If each successive record shows this heating to be continuing in the same spot and apparently somewhat increased each time, it would indicate defective insulation or a partial short or ground in the windings at this point, meaning that the machine should be taken down for reinsulation or repair of that section of the winding as soon as it can be done without interfering with production in the shop.

Suppose in another case that the Megger test one month shows the insulation resistance of a certain machine to be 1,250,000 ohms, 1,150,000 ohms three months later, and 1,000,000 ohms six months later. These reports would indicate that the insulation of that machine is deteriorating or failing as a result of moisture, oil soaking, or old age, and it would mean that the machine should be dried out, have the oil washed out of the windings; or, if neither of these faults is to blame, the winding would need to be reinsulated or replaced as soon as the machine could be taken out of service for a sufficient period.

414. TOOLS AND INSTRUMENTS

The small hand tools and more common devices required for maintenance work were covered in Section Three on Direct Current. In addition to these items the maintenance shop will require other tools, such as vises, dies, wrenches, block and tackle, gear pullers, drill presses, etc.

Several portable test instruments should always be available for general testing purposes, as they are of the greatest importance in maintenance of electrical machinery. Among these instruments should be included voltmeters, ammeters, wattmeters, Megger, test lamps, test magnetos, dry cell and buzzer testers, etc.

415. GROUND DETECTORS

Ground detectors can also be used if the system is not of the normally grounded type. An accidental ground on a normally grounded system immediately results in a short circuit and in such cases the ground detector would be useless. These devices are very useful, however, in indicating the presence of grounds on ungrounded systems. When such a ground is indicated it should be immediately located and cleared.

Ground detectors generally consist of a simple meter similar to a voltmeter, which is connected between the line and the ground.

When a ground detector is not available a simple and inexpensive arrangement of lamps may be used to take its place. Fig. 448 shows in the upper sketch the connections for a continuous-type ground indicator using a bank of six lamps with two connected in series between each phase and ground.

A snap switch and fuse are also provided in series with each set of lamps. With this type of ground indicator all of the lamps will remain burning at about half voltage as long as there are no grounds on any phase, but as soon as a ground occurs on any phase the lamps between this phase and ground will go out, or become very dim if the ground is of high resistance. The remaining lamps will then burn at full brilliancy.

This action is due to the fact that some of the lamps are shunted or paralleled by the ground circuit whenever an accidental ground occurs on any phase.

Where it is desired to avoid the small cost of operating such a set of lamps continually, an intermittent ground detector can be used by connecting lamps with a selector switch, as shown in the lower sketch in Fig. 448. With this type of detector the lamps are normally switched off and a test is made once or twice a day by switching on the lamps and moving the selector switch from one phase to the other to determine if there is a ground on any phase.

416. SAFETY PRECAUTIONS

When doing any kind of maintenance or repair work around electrical machinery extreme care should be used to protect both yourself and your fellow workmen. All companies consider the safety of their employees above everything else, and the man who always practices safety first not only eliminates a great deal of danger of injury to himself but also has a much better chance to become a foreman or chief electrician.

Protective apparatus such as rubber gloves, rubber blankets, hook sticks, and insulated platforms

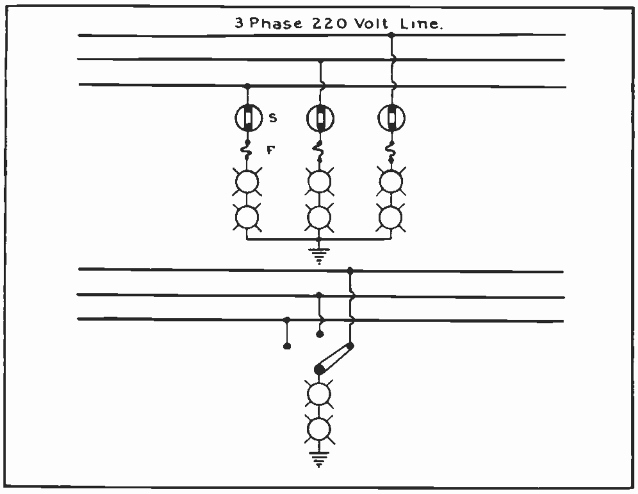

Fig. 448. Two methods of connecting lamps to serve as simple ground detectors on three-phase power circuits.

should be used in all cases when working on or around high-voltage equipment.

Fig. 449 shows a sketch of a simple insulated platform which can easily be made from short pieces of strong, dry board mounted upon four pin-type insulators as shown. Small pin-type insulators can be used in the inverted position as shown in the upper sketch, or larger pedestal type insulator units can be mounted on short pieces of board and attached to the under side of the platform as shown in the lower sketch. This latter method protects the insulators from breakage by being bumped on concrete floors.

When working on circuits of low and moderate voltages thick rubber mats can also be used to insulate a worker from a damp concrete floor. Mats of this type are usually tested to withstand voltages or pressures of 15,000 to 20,000 volts but are generally not depended upon entirely for the safety of operators working on equipment of over 1000 volts.

Stools or platforms on raised insulators should be used on circuits having voltages from 500 to 1000 volts and up.

Never attempt to operate by any other means disconnect switches or any equipment which is supposed to be operated with an insulated hook stick.

Always use rubber gloves and rubber blankets when working on live circuits over 550 volts and in many cases it is advisable to use them on any circuits of over 220 volts.

When working around live circuits, one should always be on the alert to avoid making a contact with the wires of two opposite phases or with one phase and ground, and allowing current to pass through any part of the body. When working around very high-voltage conductors one should always keep several feet away from them.

Be extremely careful not to make short circuits, even on low-voltage equipment, because short circuits are very dangerous regardless of the voltage of the circuit. Shorts on 110-volt circuits, or even on five or ten-volt battery or electro-plating circuits which have considerable generator or battery capacity attached to them, can be very dangerous and destructive by the terrific flashes and scattering of molten metal in case they are short-circuited with some low-resistance tool.

When handling conduit, ladders, or anything of this nature around live circuits be extremely cautious in moving them, as they are easily swung into live wires or rotating machinery.

All circuits should be considered as being alive until they have been proven otherwise and are thoroughly grounded. Persons working around rotating machinery should wear closely fitting clothes to reduce the chance of becoming entangled in the running parts. Be careful not to allow tools or loose parts of equipment to fall into running machines, and never leave tools lying on or around electrical machinery when it is started up, as the magnetic field of the machine may draw the tools into the rotating parts and not only damage the machine but possibly injure a workman by throwing the tool violently out of the machinery.

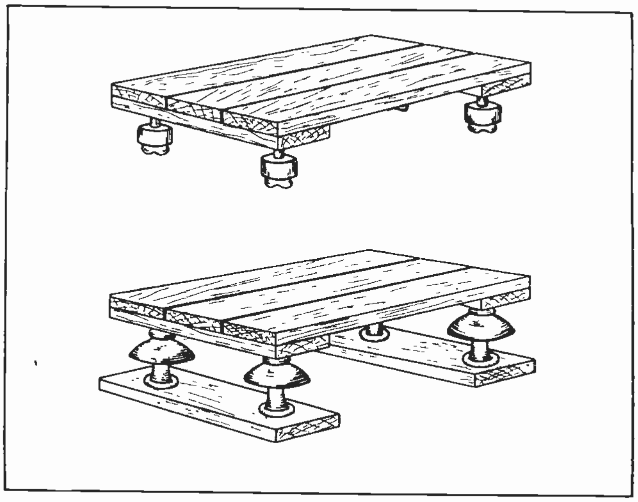

Fig. 449. The above sketch show two types of insulated stools or platforms for safety in working around live wires. These are very simple and inexpensive to make.

When switches are opened to allow men to work on any line or circuit, the switches should be carefully tagged or labeled with a warning not to close them because men are working on the circuits or machines attached to them. Whenever possible such switches should be locked open by means of a padlock or clamp. The circuits which are thus "killed" for repairmen to work on should be carefully grounded by means of flexible copper cable equipped with clamps.

417. BEARINGS

In the Armature Winding Section the more important methods of testing and repairing windings for either D.C. or A.C. motors or generators were covered; and considerable instruction was given on electrical repairs and maintenance for D.C. motors and generators in the Direct Current Section; and on alternating current motors, generators, and transformers in the Alternating Current Section.

Up to this point, however, very little has been said about the bearings of motors and generators except the instruction regarding their lubrication and temperatures. Bearings are about the only part of electric motors or generators aside from the commutators, slip rings, and brushes on which there is any mechanical wear or need of maintenance and repair.

For this reason bearings will be considered in detail at this point. If bearings are properly lubricated they will often last for many years without any great amount of wear, but if they are not kept properly oiled and free from grit, dirt, etc., they will wear very rapidly and soon make it necessary to shut down the machine for replacing or repairing the bearings.

Even with the best of lubrication and care, ordinary sleeve bearings will wear out in time and allow the rotors of machines to get out of center in the stator core or between the field poles. When the bearings are badly worn the rotor may even rub the teeth of the stator or the ends of field poles. This condition should not be allowed, but when it is noticed the bearings should be repaired at once.

There are two general classes of bearings, which are known as **sleeve** bearings and **ball** or roller bearings.

Sleeve bearings consisting of a babbit or bronze sleeve in which the shaft turns have been by far the most commonly used in the past, and there are still in service considerably more of this type than any other. During the last few years, however, ball and roller bearings have become very popular and they are quite extensively used in newer type machines.

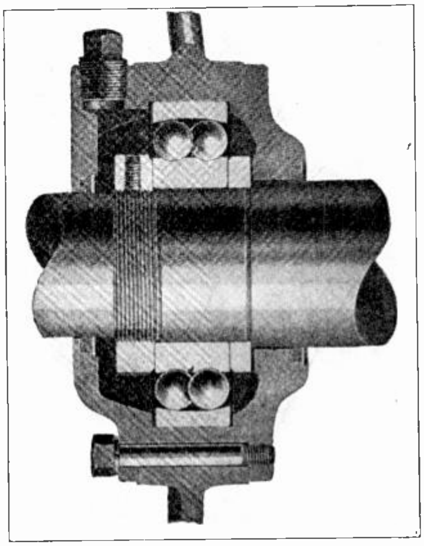

Fig. 450. Sectional view of a double-row ball bearing, showing inner and outer bearing races and some of the balls.

418. BALL AND ROLLER BEARINGS

As ball and roller bearings generally require much less care and attention than sleeve bearings they will be covered here first.

Ball and roller bearings both have inner and outer rings or bearing races made of hardened steel, and between which the balls or rollers run.

Fig 450 shows a sectional view of a ball bearing in place around the shaft and within the bearing housing of a motor. The inner ring or bearing race is pressed tightly on the shaft and is held in place against the shoulder on the shaft by the clamping or retaining nut shown on the right.

This inner ring turns with the shaft at all times. The outer ring or bearing race is held securely in the bearing housing in the motor end-shield. This ring should always be stationary and it should not be allowed to rotate in the bearing housing.

The balls of bearings of this type are made of very hard steel, and if properly lubricated they are capable of withstanding many years of wear. These balls are spaced and held in their proper positions by light metal cages, to prevent them from bunching up and jamming in the race and to keep them rolling freely and evenly around the bearing.

These cages should always be kept in good condition, or otherwise the balls will roll together and wear on the surfaces of each other, and also rapidly wear away the surface of the bearing race.

Fig. 161 in Section Five on A.C. shows a sectional view of a squirrel-cage motor equipped with ball bearings.

Fig. 176 in the same section shows an excellent sectional view of a motor equipped with roller bearings. Refer back to these figures and note carefully the manner in which these bearings are constructed and mounted in the motor.

Fig. 451 shows a larger view of a tapered roller bearing, such as is very commonly used in some of the more modern motors. The hardened steel rollers are firmly held within the center ring, which rotates as the rollers run around between the inner and outer rings. The inner ring in this case also fits securely to the motor shaft and revolves with it, while the outer ring is held securely and stationary in the bearing housing in the motor end-shield. This tapered bearing construction prevents end-play of the motor shaft and rotor.

419. LUBRICATION OF BALL AND ROLLER BEARINGS

Ball and roller bearings are generally lubricated with a good grade of light grease such as vaseline, and under ordinary conditions two or three applications of fresh grease per year are sufficient.

When motors are operating in very dusty places it may be necessary to grease the bearings more frequently. Grease guns are usually provided for filling bearings of this type.

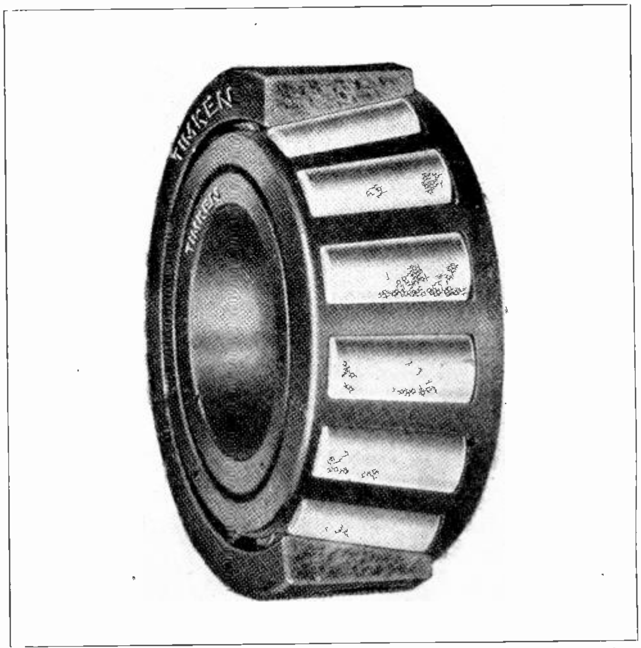

Fig. 451. Cutaway view of a Timkin tapered roller bearing such as commonly used in high grade motors.

Motors with ball or roller bearings cost somewhat more than those with sleeve bearings, but the longer life of the ball and roller bearings and the reduced maintenance cost will generally more than offset the small additional first cost of the machine equipped with ball or roller bearings.

Ball and roller bearings produce less friction than sleeve bearings and therefore make the machines slightly more efficient. The fact that these bearings wear very little also allows the use of a smaller air-gap, improving the characteristics of certain types of motors considerably.

Complete new ball and roller bearings can be obtained from the manufacturers of the motors or from bearing manufacturers, when it is necessary to replace worn bearings of this type. These bearings are generally made in standard sizes so that, by specifying the inner and outer diameters of the rings or races or the bearing numbers which are plainly stamped on them, new bearings or repair parts can be ordered from bearing manufacturers as well as from the motor manufacturers.

420. SLEEVE BEARINGS

Sleeve bearings are made in both the solid and split sleeve types. In either case the bearing forms a cylinder or sleeve with a uniform diameter and very smooth inside surface in which the shaft rotates freely on a thin film of oil.

Bearing metals must be different from the metal of the shaft in order to run freely and prevent excessive friction and wear. Bearing metals are generally an alloy of two or more metals, such as copper, lead, tin, zinc, and antimony, and are made in different degrees of hardness. This metal is commonly known just as bearing metal, and certain alloys are called **babbit**. Other bearings are made of soft bronze.

The inner diameters of bearing sleeves are always just a few thousandths of an inch larger than the shaft diameter in order to allow free rotation of the shaft. This clearance is generally approximately .005 of an inch on shafts of approximately 2 inches in diameter.

When installing new sleeve bearings it is very important to obtain a good fit on the shaft. If the new bearings are ordered from the motor manufacturers or to exact size from a bearing maker, they will generally fit very well when received. Occasionally, however, a bearing sleeve may fit the shaft too snugly, in which case its inside diameter must be increased very slightly until the shaft will just rotate freely without friction or binding.

Bearings can be enlarged by use of a **bearing scraper**, which is used to scrape out what are called the "high spots" on the inside of the bearing sleeve. Bearing scrapers are very common tools in electrical maintenance shops, industrial plants, and auto repair shops. They consist of a curved shoe or blade of hollow ground steel which is equipped with a handle. These hard steel blades are used to scrape a very thin layer of soft metal from the inside of the bearing. It is not usually necessary to scrape the entire inner surface of the bearing, because in most cases only a few spots are high on the shaft.

To locate these high spots which must be scraped a thin film of Prussian blue, or what is known as **"bearing blue"**, can be applied over the entire area of the shaft where it is normally supported by the bearing.

The bearing is then slipped on the shaft to its proper location and turned, and when it is again removed the high or tight spots can easily be located by the blue color on and around them.

These are then scraped down very slightly by means of the bearing scraper and the bearing is then again tried on the shaft. Proceed in this manner until the bearing turns freely on the shaft, but be careful not to enlarge it too much at a time and get it fitting too loosely.

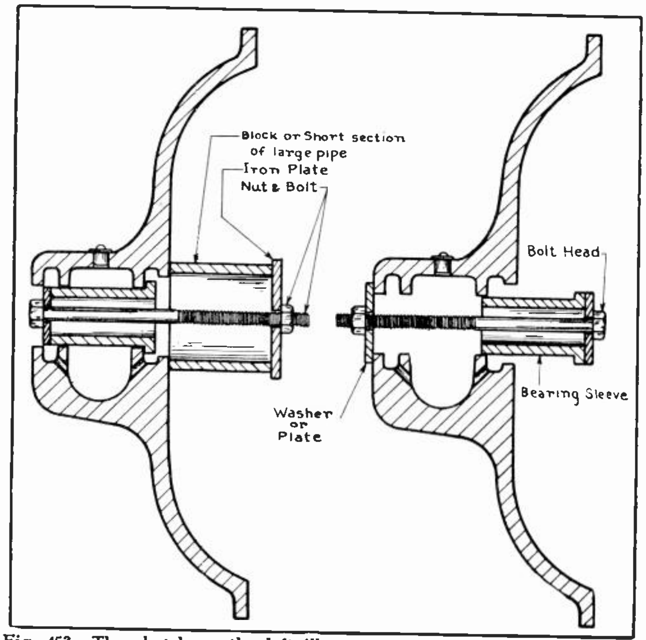

Fig. 452. The sketch on the left illustrates a convenient method of removing a sleeve bearing; and on the right is shown the method of replacing the bearing.

421. INSTALLING BEARINGS

Solid sleeve bearings must be placed in the end-shield bearing housings before the end shield on the motor or generator frame. The oil rings should be placed in the housings before forcing the bearings down into their proper location.

If the bearing fits in the housing quite loosely it may be forced into place by laying a wood block on the top end of the bearing and gently tapping it down in place with a hammer.

Always use a wood block for this purpose and never allow the hammer to strike sharply on the bearing, or the bearing metal may become badly dented or bruised.

Bearings which fit rather tightly may be pressed into their housings or pulled in by means of a long threaded bolt and several washers which will not slide through the bearing. This method is illustrated by the sketch on the right in Fig. 452, which shows a sectional view of a sleeve bearing being drawn into the bearing housing by means of such a bolt.

Care must be taken to start the bearing squarely into the bearing housing in a straight line with the bore, or otherwise the bearing may become jammed and pulled out of shape. Bearing sleeves may be very easily ruined in this manner.

Another very important precaution is to see that the top of the bearing sleeve is in line with the top of the end shield, or otherwise when the bearing is pulled in place the oil ring opening will be out of line and prevent the ring from resting on the shaft, resulting in a poorly lubricated and burned out bearing.

When the bearing sleeve has been carefully started and lined up in the bore of the housing, the nut of the draw bolt can be turned with a wrench, causing a pull upon the washers, which will force the bearing into place.

Bearings can also be removed from housings by the use of a draw bolt and blocks or a short section of pipe which is large enough to set on the end of the housing and allow the bearing sleeve to be drawn out of the housing and into the pipe stub, as shown on the left in Fig. 452.

Fig. 453 shows sectional views of two complete bearing housings with the bearing sleeves in place. These views also show the oil rings in proper position on the shaft. Note how the lower side of the oil ring hangs down into the oil well, so that as the shaft revolves the ring will carry the oil up to the top of the shaft.

The oil then runs from this point down over the shaft, maintaining a thin film of oil all around it between the surface of the shaft and that of the bearing.

The filler opening or cup at which new oil is poured into the bearing is shown on the top of the bearing housing in this case. The inner surfaces of sleeve bearings are usually provided with oil grooves to allow the oil to flow more freely to all parts of the bearing sleeves.

Fig. 454 shows a phantom view of a bearing sleeve and the position of the oil grooves. In new bearings supplied by manufacturers these oil grooves are already cut and are generally about 1/8 to 3/16 inches in width and from 1/16 to 1/8 inch in depth, according to the size of the bearings.

When fitting a machine with Babbitt bearings the oil grooves can be cut in this soft metal by hand with a small tool designed for this purpose.

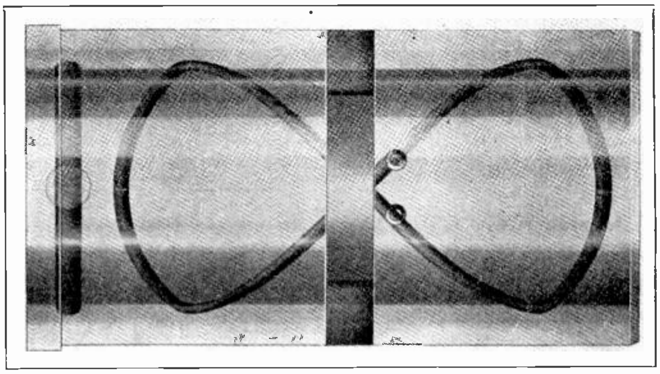

Fig. 454. Phantom view of sleeve bearing, showing oil grooves and oil ring slot.

422. REASSEMBLING MOTORS AND GENERATORS

After new bearing sleeves have been placed in the end shields of motors or generators the rotor is placed in the stator or field frame and the end shields and bearings are slipped over the ends of the shaft and up to the motor frame, being careful to get the end shields right side up so that the bearing housings and oil wells are in the proper position.

The bolts or cap screws which are used to hold the end shields in place are next turned in by hand as far as they will go. A wrench is then used to uniformly tighten the bolts and draw the bolts up to the motor frame.

The bolts should be tightened alternately so that they are all drawn up together. Never draw up one

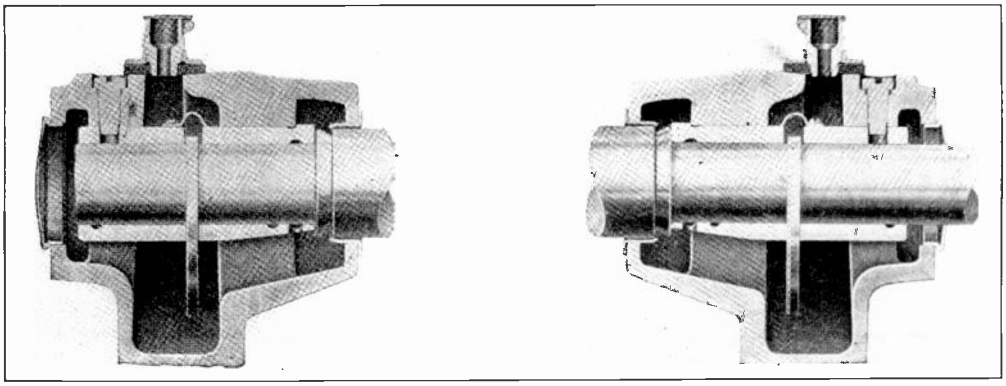

Fig. 453. Sectional views of two sleeve bearings, clearly showing the oil wells, oil rings, filler cups, etc.

bolt as tightly as possible and then go to the next, because this practice will generally result in the shaft becoming bent or sprung or in warping or damaging the bearing.

When the end shield has been pulled securely in place try turning the shaft and if it fails to turn freely check to see if the end shield is squarely against the frame or shoulder all around the machine. If it is and the bearing still remains tight it will be necessary to remove the end shield and scrape the bearing until a free running fit is obtained.

In replacing end shields on motor or generator frames it is a good plan to see that the machine surfaces or shoulders on both the end shield and frame are clean and free from dirt and grease. Sometimes it may be necessary to lightly tap the end shield with a mallet or wood block to get it to draw up tightly on the frame.

423. LUBRICATION

Sleeve bearings are generally lubricated with a medium grade of lubricating oil instead of grease such as used in roller and ball bearings. A good grade of oil should always be used, as poor or cheap grades of oil often have a tendency to turn rancid or to "gum up" in use.

The use of good oil is of the greatest importance in obtaining satisfactory service and long life from bearings on electrical machinery. Reliable oil companies, such as the Standard Oil Company, Sinclair Oil and Refining Company, Cities Service, Vacuum Oil Company, Pennsylvania Oil Company, and others, supply good lubricating oil for various machines, and are usually glad to furnish the service of a lubrication expert to specify the proper grades of oil for any ordinary machinery or special requirements that the electrical maintenance man may have.

Fig. 455 shows a sectional view of a bearing housing and sleeve-type bearing in which the proper level of the oil can be noted in the oil well. The amount of oil required for various sleeve-type bearings may range from a few teaspoonfuls in very small motors up to several quarts on the larger machines.

The oil should always be kept clean and free from dirt and at the proper level.

The oil ring can also be seen in Fig. 455 with its lower side hanging in the oil and the upper side resting on the top of the shaft at the slot in the bearing sleeve.

Oil rings should always run freely whenever the machine is in operation and should never be allowed to bind or stick even for short periods, as the shaft and bearings depend entirely upon the rings for their constant supply of oil.

If oil rings become bent or bruised by careless inserting of the shaft into the bearings the rings will probably not turn. So considerable care should be used when replacing bearings and end shields on the shafts.

If there is no oil in the bearing at the time it is replaced, the end shield and bearing housing can be turned upside down to allow the oil ring to fall out of the way and run from the inside of the bearing sleeve while the end of the shaft is being inserted.

If the bearing housing is filled with oil and must be kept in an upright position, the oil rings can be lifted out of the way either by means of a small wire hook inserted under the oil well covering or by means of a small stick inserted from the open end of the bearing sleeve.

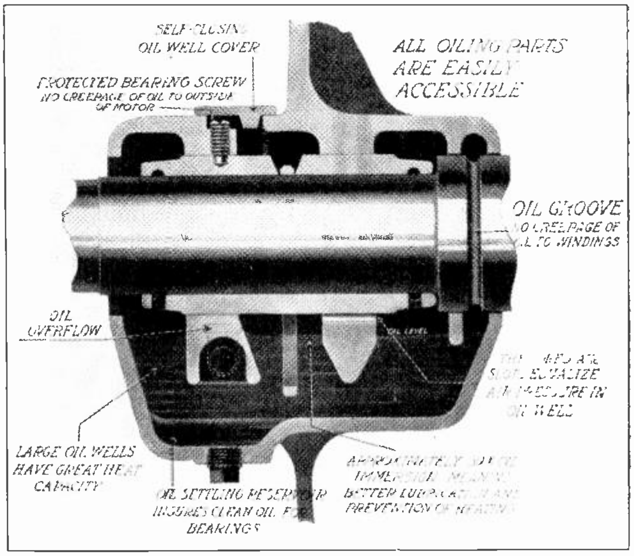

Fig. 455. Another excellent sectional view of a sleeve type bearing, showing oil level, oil ring, oil well cover, drain plug, bearing set screw, etc.

424. DUST SEALS

Dust seals consisting of felt rings which are held in place around the shaft on either end of the bearing are often used to prevent dust and dirt from entering the bearing oil.

Devices of this kind help to maintain the lubricating qualities of the oil and greatly increase the life of the bearing. Most modern machines are equipped with dust seals of some form or other, but on older machines which are operated in dusty places the maintenance man can often save a great deal of bearing trouble by equipping the bearing housings with felt rings which are cut from felt having a thickness from 1/8 to 3/8 of an inch, and fitting them tightly to the shaft.

These felt rings can be held in place by thin metal rings or plates which are secured to the end shield or bearing housing by means of small machine screws threaded into small tapped holes in the iron frame around the shaft openings.

Ball and roller bearings often have what are known as labyrinth dust seals consisting of a special metal casting which fits around the shaft with a very small amount of clearance where the shaft enters the bearing housing.

The insides of this cylindrical casting are provided with a number of small grooves which are filled with grease by the overflow or squeezing out of grease from the bearing when it is filled. These little ridges of grease rotate with the shaft and, as their points or edges project up into the grooves in the metal casing, they form quite an effective barrier to dust which might otherwise be blown into the bearing.

When the dust and dirt comes into contact with the grease it is clogged and held and is prevented from passing on into the vital wearing parts of the bearing. As new grease is forced into the bearing occasionally the old dirty grease is forced on out of the dust seal rings.

Seals of this type provide another good reason for frequent and sufficient greasing of ball and roller bearings.

425. CHANGING BEARING OIL

After oil has been in the wells of ordinary motor or generator bearings for a time it becomes dirty with dust and metal particles worn from the shaft and bearings.

The presence of dirt and foreign matter in lubricating oil can be detected by examining a drop of the oil on one's finger or hand, or on a bright nickle-plated metal surface. Another good way is to place a sample of the oil in a small glass bottle or test tube. By holding the bottle or tube up to a bright light or so that sunlight can shine through it, any dirt in the oil can usually be seen.

Dirty oil should not be left in a bearing, because the grit and dust in it causes rapid wear of the shaft and bearing.

The dirty oil should be drained from the bearing by removing the drain plug in the bottom of the oil well. See Fig. 455.

Next flush out the dirt which may have settled in the bottom of the well, by running gasoline or flushing oil through the oil well.

The insides of oil wells are sometimes painted white to enable any dirt settlings to be seen, and so one can tell when the well is flushed clean.

Refill the bearings with clean new oil, to the proper level according to oil mark or gauge. Do not fill them too full or oil will leak out and get onto the windings or commutators. Always fill oil wells at the filler ports when they are provided, and not at the top of the bearing except when this cannot be avoided.

426 BREAKING IN NEW BEARINGS

When a new motor or generator is started up for the first time, or when starting a machine in which the bearings have just been replaced, the bearings are likely to heat more than usual because the surfaces of shaft and bearings are not yet worn as smooth as they are after a period of service.

For this reason, it is advisable to watch the bearings of such machines very closely for the first thirty minutes to one hour of operation, and to continue to give them very frequent attention during the first few days. After this period the bearings and shaft usually become highly polished and smooth or get the "whiskers" worn off, as is often said; and thereafter they run with much less friction and heating.

When inspecting new bearings for high temperatures, merely holding the hand on the bearing housing is not always a good indication of the bearing metal temperature. It is best to place the finger tips on the bearing sleeve itself, where the temperature can be more accurately determined. Thermometers are often used to show the temperatures of bearings of very large motors or generators.

Never wait until a bearing smokes before taking steps to cool it, because by that time it may be seriously damaged.

When starting up new machines or those with new bearings the following several steps are very important.

(a) Fill oil wells with good clean oil

(b) See that oil rings are turning freely

(c) See that shaft turns freely and easily

(d) Test for end-play

(e) Test for heating at bearing sleeve (not at outside of housing)

(f) Watch bearing closely for one-half hour or more

(g) If bearing overheats, cool it with fresh oil; or shut machine down if it continues to overheat.

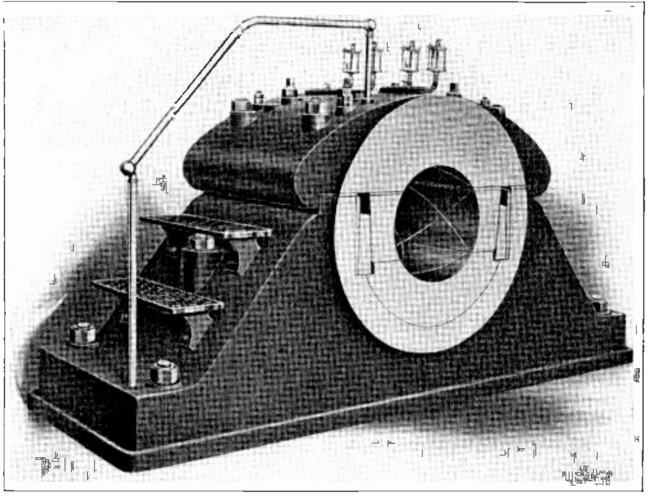

Fig. 455-A. Very large special sleeve bearing for use with steam engines. Note the adjustable sections in the sides of the bearing to prevent pounding due to bearing slack and engine thrust.

427. LOSS OF OIL FROM BEARINGS

Bearings sometimes lose oil from one of the following causes: siphoning by air currents, worn or loose bearings, and leaks in oil wells around drain plugs or filler connections, or at cracks or sand holes in the iron.

Siphoning of oil from bearings is caused by the strong draft of air which is set up around and through open-type bearing housings by the rotation of motor and generator armatures and by the action of ventilating fans used on them.

This air passing over the surface of the oil carries away oil particles with it, often quickly reducing the oil level to a dangerously low point and also damaging the insulation on windings through which the oil-laden air passes.

As much as one-fourth to one-half pint of oil per week may often be carried from bearings in this manner.

Loss of bearing oil by air siphoning can be prevented by the use of felt seal rings, as previously described.

Loose bearings allow the shaft ends to whip around with load fluctuations and thus cause oil to be splashed out from between the surfaces of the shaft and bearing.

In addition to lowering the oil level in the oil well, the oil escaping in this manner often causes considerable damage to paper pulleys and rubber or leather belts, as well as making dangerous and unsightly oil pools or spots on the floor.

We have seen loose bearings on 900-R.P.M., 25-h.p. motors, throw out more than a teacup full of oil per hour in this manner.

The best remedy in such cases is the installation of new bearings, although the trouble may be temporarily remedied by the use of felt seal rings to keep the oil in the bearing housing.

Loose drain plugs, drain cocks and oil gauges also cause loss of oil in many cases.

Sometimes rather mysterious loss of oil occurs through very small cracks or sand holes in the cast-iron oil well casing. Such cracks or holes can be closed by welding or soldering. A small sand hole can often be closed by tapping it shut with a round headed hammer, or by drilling out the hole and then driving or threading a metal plug tightly into the hole.

428. OVERHEATED BEARINGS

Bearings practically always produce a small amount of heat because of the slight friction even when they are operating properly. Excessive bearing temperatures are commonly caused by one or more of the following items:

Tight bearings
End shield out of alignment
Bent shaft
Rough shaft or bearing surface
Dirty oil or poor grade of oil
Insufficient oil
Bearing up-side-down
Excessive belt tension
Misaligned gears
Insufficient end play
Motor not level
Heat transfer from hot commutator or brushes.

Bearings will sometimes turn bottom-side-up if the bearing set-screw becomes loose. This causes the oil ring to be lifted off the shaft and will often result in a burned-out bearing if it is not noticed and corrected promptly.

In an effort to prevent belt-slip belts are often drawn up too tight. Excessive belt tension places unnecessary friction on one side of the bearing, and causes excessive wear and heating.

Proper care and arrangement of belts makes excessive tension unnecessary. Vertical belt drives should be avoided whenever possible, as they are often the cause of bearing trouble.

When motors drive machines by means of gears and pinions the gears should be carefully lined up so that their teeth mesh squarely and on their pitch lines, or otherwise they cause side-thrust and wear similar to tight belts.

Insufficient end-play is often caused by bearing sleeves not being properly drawn into the bearing housings, or by improperly machined end shields or shoulders on shafts. The result is pinching of the shaft between the ends of the bearings, and this causes excessive friction and heating.

The end-play should be checked on new machines or those on which bearings have been changed. The end-play movement will vary from 1/32" in small motors to 1/4" on large machines of 50 h.p. or more.

In a motor or generator which is not set level the rotor will slide to one end, causing the shaft shoulder to rub on the inner side of the bearing housing and heat up the bearing.

Sparking commutators or incorrect brushes sometimes produce so much heat that enough of it is transferred through the metal to the shaft to overheat a bearing.

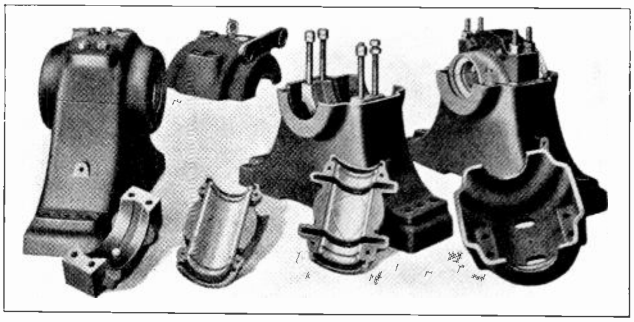

Fig. 456. Pedestal type sleeve bearings, showing parts of one bearing and housing disassembled.

429. FROZEN BEARINGS

The term "frozen bearings", while sounding rather contradictory, is commonly used in the field to indicate a bearing which has become stuck or locked due to overheating. When a bearing becomes overheated beyond a certain point a thin layer of the bearing metal surface becomes soft and partly molten. If the shaft stops turning when the bearing is in this condition the bearing will cool and grip the shaft very tightly, often making it impossible to start the machine again.

When a bearing becomes smoking hot before its overheating is noticed, freezing can sometimes be prevented by applying heavy steam-cylinder oil to the top of the oil ring slot as the machine is carefully slowed down to allow the bearing to cool gradually. Never allow the machine to stop completely until the bearing has cooled somewhat, or it will be almost certain to immediately "freeze" to the shaft.

The heavy oil recommended for such emergencies provides much better lubrication at such high temperatures.

If an overheated bearing is not noticed in time and the motor or generator is allowed to continue running, the bearing will burn out or melt out completely and also cause serious damage to the surface of the shaft by scoring and roughening it.

The difficulty of removing frozen bearings from a shaft makes it well worth considerable precaution to avoid this condition.

Frozen babbitted bearings can be removed by applying enough heat from a blow torch to melt the babbitt out entirely, and the bearing shell can then be slipped off the shaft.

Brass bearings may be turned off in a lathe or split and pried off in pieces with a dull cold chisel, being very careful not to damage or nick the shaft.

430. CARE IN HANDLING END SHIELDS

When removing end shields to repair or replace bearings, great care should be used to avoid bumping or roughening the face of the shield where it fits to the motor or generator frame. Care is also necessary to draw the bearing straight off the shaft and replace it straight in order to avoid damage to the ends of bearings.

See that all dirt and dust are removed from the shaft and bearings before replacing end shields.

End shields can be removed from small and medium-sized machines by hand, by one or two men; but large ones are usually of the sectional type and should be handled with a block and tackle, or proper blocking beneath them to allow them to be swung or slid freely on and off the shaft.

Many large machines have bearings in separate pedestals mounted on the end of the machine base, instead of having them in end shields. Fig. 456 shows several bearings of this type.

Note that the bearing housings are split and bolted to permit easy removal of bearings without driving or forcing them.

Bearings on small motors are sometimes oiled by means of cotton wicks or yarn packing which rub on the shaft and carry oil to its surface. Fig. 457 shows a bearing with cotton oil-feed packing.

431. SHAFTS

Motor and generator shafts of the cheaper type are made of cold rolled steel, while those of better grade machines are made of nickel-steel or steel which is specially heat treated and hardened to get high strength and toughness as well as hard wearing surface.

On very large machines the shafts are often of drop-forged steel and are made hollow. This makes them lighter without materially decreasing their strength. For example, a 10"-diameter shaft with a 4"-hole has the same strength as a solid shaft 9.91" in diameter.

The bearing surface of shafts should always be kept bright and clean and should not be allowed to rust. When rotors or shafts are out of the machines and are to be laid away out of service for a time, the shaft can be coated with heavy grease to prevent rust. They can also be coated with white lead, which can be carefully cleaned off when the shafts are needed again.

It is well to wrap shafts with cloth or paper to prevent their surfaces from becoming bumped and damaged while they are out of machines.

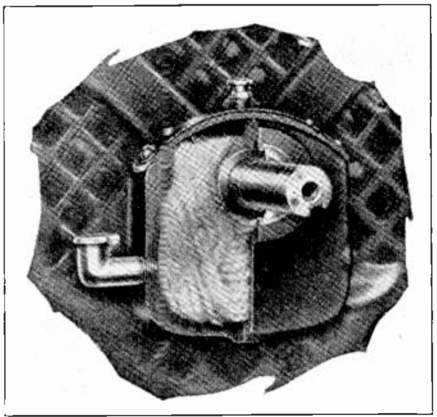

Fig. 457. Bearing with cotton filled oil well, for wick oil feed action to shaft.

Dents and rough spots on shafts can be filed off carefully and smoothly with a fine smooth file. Do not attempt to file out the dents or hollows but just the raised edges or burrs which would score the bearing.

A badly damaged shaft can be turned down in a lathe or reground with a grinding machine. Rust or very slightly roughed surfaces can be smoothed off by polishing the shaft with crocus cloth. Crocus cloth is similar to emery cloth but has a coating of extremely fine cutting material of dull red color. Its cutting action is very slow, but it gives the smooth surface required for good bearing operation.

The use of emery cloth on shafts should be avoided, as it leaves rough scratches in the surface of the shaft.

If a shaft requires turning or grinding down to a smaller size, a new bearing sleeve or bushing can be used, giving a smaller bearing opening to fit the shaft. Or, in other cases this shaft can be built up by electric welding and then reground to original size.

432. KEYS, KEYWAYS, PULLEYS, AND GEARS

Keyways in shafts are accurately machined so that the keys will fit snugly and tightly in them, and this tight fit is necessary to keep keys in place and to prevent the movement of pulleys or gears and the shearing or twisting of keys. For this reason, keys of the proper size should always be used, and keyways should not be filed except to remove from their corners slight burrs or dents which tend to prevent the insertion of the key.

Ordinary square, cold rolled steel, key stock can be purchased in 10-ft. lengths or less, and in any of the standard sizes which are commonly used by motor manufacturers. In a large shop it is well to always have a little key stock on hand.

Pulleys and gears should fit snugly on the shafts, to prevent slipping, rattling, and wearing of the shaft and the inside of the pulley opening. Never expect a key to hold a loose pulley or gear in place if there is any load on them.

Coating the shafts and keyways with a little flake graphite before pulleys and gears are put on makes it much easier to remove them later. Small pulleys and gears may be driven onto shafts with a hammer or small sledge. Always use a block of wood between the hammer and gear or pulley to avoid battering or cracking the metal, and always tap them evenly, first on one side and then the other, to prevent binding on the shaft.

Large pulleys or gears may be forced onto shafts with braces or jack screws. Pulleys and gears can be removed from shafts by loosening their set screws, driving out the keys, and then lightly tapping the pulley off the shaft with a hammer and block, as previously mentioned.

A better device for this purpose is a regular gear puller such as shown in Fig. 458. The hooks of this device are placed against the back of the gear or pulley and the large screw is then tightened against the center of the end of the shaft, thus drawing the gear or pulley off.

If possible, the keys should be driven out before removing pulleys or gears, but when it is difficult to remove the keys first they can often be taken out after the pulley or gear is off.

433. AIR GAPS

A perfect motor should have the same air gap all around the rotor, or the same gauge readings at the top and bottom and right and left sides of the rotor. It is difficult, however, to machine rotors and stators as accurately as this and the air gap of a new motor may vary as much as .005 inch between the four gauge readings.

When the variation becomes considerably greater than this due to bearing wear, it causes an unequal air gap, reducing the efficiency of the motor or generator and in some cases causing excessive heating of certain coils in the stator. For this reason, it is very important to make frequent inspection of air gaps of motors and generators, using the convenient air-gap gauges previously described.

Fig. 459 shows an air-gap gauge having a number of blades of different thicknesses and each 16″ long. All of the blades can be folded within the handle for convenient carrying and protection of their surfaces.

Small motors will generally have air gaps ranging from .005 to .015 of an inch, while motors of 10 to 50 h.p. have .020 to .035 of an inch. Larger machines may have clearances of .040 to .060 of an inch or more. Machines with ball or roller bearings usually have slightly less clearance than those with sleeve bearings.

If a motor when new has a gauge reading of .030 of an inch all the way around it should have new bearings before the gauge bearings become less than .015 on one side and more than .045 on the other.

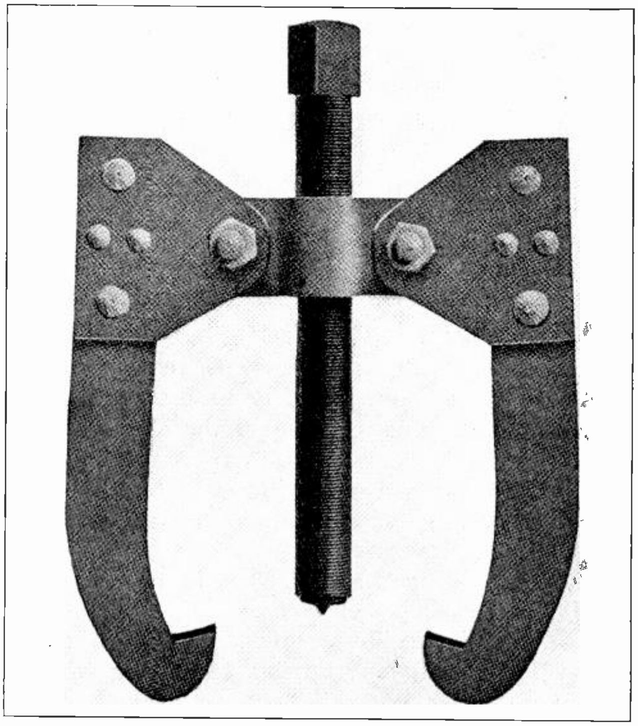

Fig. 458. Simple gear or pulley remover, commonly called a gear puller. Tight fitting gears and pulleys can be removed from shaft ends with such a device.

434. SQUIRREL-CAGE ROTOR TROUBLES

The rotors of modern squirrel-cage motors are very ruggedly built and are not subject to very many troubles. The bars are generally welded, riveted, brazed, or cast to end rings which short circuit them together; and, while it doesn't very often happen with this type of construction, it is possible that occasionally a bar may become broken or loosened from the end ring by excessive mechanical strains or vibration.

With older types of rotors on which the bars are soldered or bolted to the end rings they quite often work loose and develop open circuits. With the soldered construction this may be due to poor soldering and workmanship or to overheating of the rotor at some time or other, thus causing the solder to melt out.

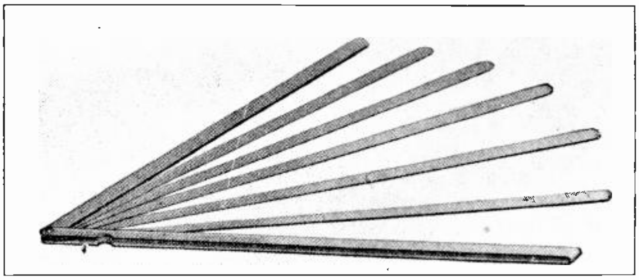

Fig. 459. Common motor air gap gauge, for measuring clearance between the armature or rotor and the field poles or stator. Note the several different "feelers" or blades which are of different thicknesses.

If solder splashings are found on the end of the stator windings opposite the rotor bar ends, it is usually an indication of loosened rotor bar connections. Bolted bars may loosen from strain and vibration and loose bars in rotors of this type can often be noticed by a series of small sparks at the end ring when the rotor is started. They can also be detected by a blackened or burned appearance of the bar or ring at the contact, or a slight rise in temperature at a loose contact after the machine has been running a short while. If the rotor bars are tapped lightly a different sound will be given off by those which are loose than by those which are tight and secure.

Loose bars of the bolt-connected type should be thoroughly cleaned and tightened, and those of the soldered or brazed type should have the joints cleaned and carefully resoldered or brazed to the end ring.

Loose or high-resistance joints between the rotor bars and end rings cause reduced starting torque and reduced operating efficiency of the motors, as well as increased heating.

Unusual noises in squirrel-cage rotors may be caused by the vibration of bars which have become loose at the end ring connections or loose in the slots of the rotor core.

Rotor heating may sometimes be caused by poor insulation between the laminations of the rotor core, allowing the circulation of heavy eddy currents.

435. SLIP-RING ROTOR TROUBLES

Slip-ring motors have rotor windings of the phase-wound type with the same number of poles as the stator winding. Whether these rotors are of the wire-wound or bar-wound type, they are subject to the same troubles as stator windings are. The most common of these troubles are defective insulation, shorts, grounds, opens, and loose connections. These troubles have been fully covered in the Section on Armature Winding.

Faults sometimes occur in the insulation or connections of the three leads which run from the rotor winding to the slip rings, or in the insulation of the slip rings themselves.

Oil leakage from bearings may be the cause of failure of the insulation between the slip rings and shaft or between the three separate rings. This may cause the rings to loosen or to become grounded to the shaft or short-circuited to each other.

In some cases this trouble can be corrected by cleaning and drying out the insulation or by building it up slightly larger to make the slip rings fit tightly again, and in other cases it may require complete new insulation rings under the metal slip rings.

Small burned spots in the insulation which have been caused by a ground or short-circuit can often be scraped out and plugged with fiber or insulating compound to make temporary and even more or less permanent repairs.

Lightly burned surfaces on the insulation may be scraped and cleaned, and then after the oil or moisture is dried out the insulation can be covered with several coats of shellac to keep out moisture and oil and preserve its insulating quality in the future.

Oil will sometimes cause an accumulation of dust and dirt on the brushes or brush holders and may cause brushes to stick in the holders or to build up on the contact faces of the brushes a dirty, greasy film of high-resistance.

Brushes in this condition can be cleaned by soaking and washing them in gasoline or benzine. Brush holders should be kept tight and in the proper position to prevent brushes from running over the edges of rings and causing uneven wear of both the brush and ring.

Slip rings that have been badly grooved or worn may need to be trued or turned down flat and smooth again in a lathe.

436. SECONDARY RESISTANCE TROUBLES

Secondary starting or speed control resistances which are used with slip-ring motors sometimes develop opens or high-resistance connections which cause considerable trouble in the starting or operation of the motor.

An open or high-resistance connection in one phase of this resistor will prevent the proper amount of current from flowing through that phase of the machine rotor, and thereby considerably reduce the starting and running torque.

Cast-iron grids are commonly used as resistance elements in these rheostats, and the brittleness of the cast iron makes them more or less subject to breakage by vibration or rough handling.

Sometimes tools or metal parts are carelessly allowed to drop into resistance grids, either breaking or short-circuiting them. A sheet-metal cover placed a foot or two above a bank of such grids will serve to prevent objects falling into them and also keep out any possible moisture drippings. The cover should not be too close to the grids or it may prevent the free circulation of cooling air through them.

A further protection of coarse wire screen can often be used to very good advantage around the sides of such resistance grids.

Fig. 460 shows sketches of a separate iron grid, an insulated clamping rod, and a complete assembled unit of grids for resistors of this type. In the sketch of the complete unit an "open" or "break" is shown in one of the grids at "B".

Temporary repairs for breaks of this kind can be made by the use of jumpers made of heavy flexible copper wire equipped with terminals, as shown by the sketch in the lower left corner of Fig. 460.

A repair of this kind can be made by loosening the nuts which clamp the grids together and inserting the lugs of the jumper between the points marked "X" and "Y". When the nuts are again tightened the jumper is clamped securely in parallel with the broken grid.

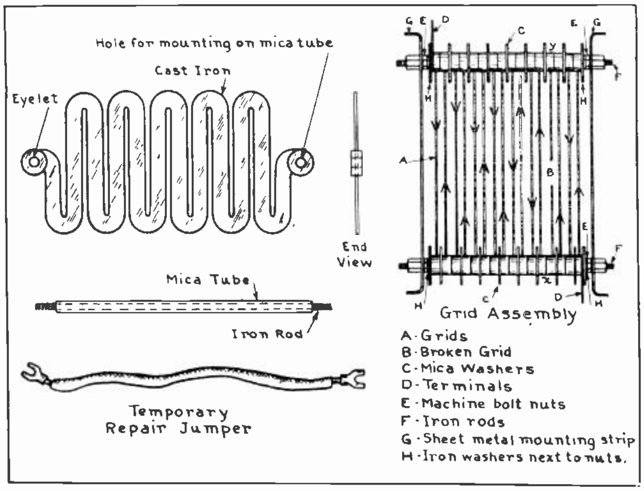

Fig. 460. Sketches showing construction of iron grid type secondary resistors for slip-ring motors. Also note the jumper used for making temporary repairs to open circuited units.

Shorting the grid out in this manner slightly reduces the resistance of that section of the rheostat, but usually not enough to materially affect the operation of the motor. The broken grid and jumper should, however, be replaced as soon as possible with a new grid.

The nuts which clamp resistors of this type together should be frequently inspected and tightened, as they occasionally work loose by vibration and thus cause poor contacts of high resistance between the ends or eyes of the grids.

This may cause burning and pitting of the contact surfaces of the eyes and necessitate the grids being removed and having the eyes ground or filed clean and smooth.

Careful observation of the sketch of the complete assembled grid on the right in Fig. 460 will show that the mica insulating-washers are properly placed to separate the ends of every other pair of grids on opposite sides, leaving the remaining ends together so that the complete circuit is formed through all of the grids in series in this one unit. Also note the mica insulating-tube which prevents the iron clamping rod from short-circuiting the grids together.

Fig. 461 shows a photograph of several resistance grid units assembled in a compact bank or framework.

437. TESTS FOR LOCATING FAULTS IN SECONDARY RESISTORS

An ammeter can be conveniently used for locating opens in secondary resistors by placing the ammeter first in one phase lead and then another and starting the motor each time. The phase in which the broken grid is located will be indicated by a zero current reading when the motor is started.

If three ammeters are available, one can be connected in each phase as shown in Fig. 462, thus making the test a little more quickly. With the open at the point marked "X", the center ammeter would show no reading when the motor starting switch is closed.

If the motor is loaded it will probably not start, while if there is no load connected to it it may start up slowly.

If the starting rheostat handle is moved gradually around to cut out the resistance, the center ammeter will suddenly show a reading when the sliding contact passes the break at "X", and if the motor has not started up to this time it will probably start rather suddenly when this point is reached; or if the motor has been running, its speed will increase as the break is passed.

By carefully watching the ammeter as the controller handle is moved, the exact location of the break can thus be determined.

High-resistance joints or cracks which are hard to find on resistors by ordinary inspection can be located by testing across the ends of the resistance grids with a voltmeter.

This test should be made while the motor is run-

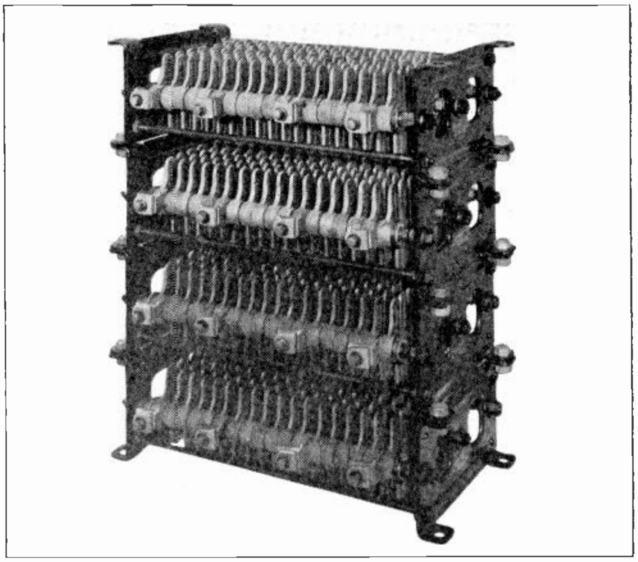

Fig. 461. Photo of complete grid resistor unit for slip-ring motor controllers.

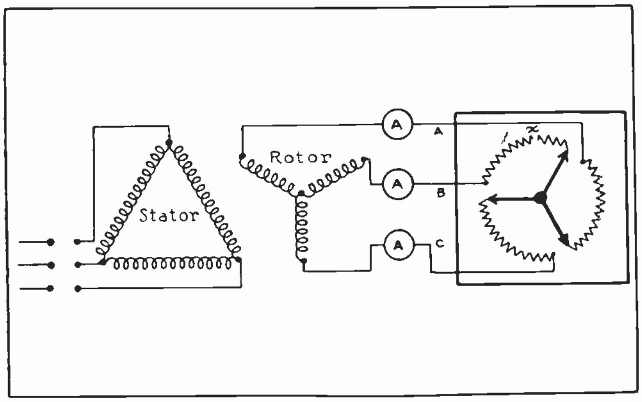

Fig. 462. Diagram showing methods of testing with ammeters to locate an open circuit in a secondary resistance.

ning and has its stator excited, and with the secondary-resistance controller on the first point. When the voltmeter leads are connected across good grids in the phase elements which are closed, only a very small voltage drop will be read.

When it is connected across good grids in the phase element which is open no reading will be obtained; but when the leads are connected across the grid which is broken or has the high-resistance connection, a higher reading will be obtained with the meter.

Intermittent opens which are caused by small breaks that are jarred open and shut by vibration, are sometimes the cause of rather mysterious troubles and are a little more difficult to locate.

By leaving an ammeter in each circuit for a time and watching the instrument for fluctuations in its readings, these intermittent or floating opens can be found.

Brushes which occasionally stick in the holders may also cause intermittent opens in the secondary circuit of slip-ring motors and these brushes can be located by connecting an ammeter in series with their leads and watching it for fluctuations.

A slip-ring motor with a properly wound rotor which is free from faults will give the same ammeter readings on each of the three secondary leads when all control resistance is shorted out of the circuit.

A rotor with slightly unbalanced currents may give good service with slightly lower efficiency and power factor. If the rotor currents in each line are considerably out of balance, the rotor winding should be checked for shorted coils, reversed poles, open circuits, etc.

A rotor which has balanced currents with all the secondary resistance cut out should also have balanced currents when all of the secondary resistance is in the circuit, provided the resistance is equally divided between the secondary phase leads and the resistance units are all in good condition.

If the ammeter readings vary considerably with a balanced rotor and all the resistance in the secondary ciruit, it indicates that the secondary resistance is unbalanced or that part of the resistance is short-circuited.

438. STATOR TROUBLES

A number of the troubles or defects which occur in the stators of A. C. machines have been fully covered in Section Two on A. C. Armature Winding, and Articles 105 to 121 inclusive should be reviewed in connection with your study of maintenance.

In addition to the actual faults which may occur in stator windings there are a number of other things which relate to the stator and its current supply which may prevent an A. C. motor from starting.

Some of the most common of these troubles are as follows:

(a) No voltage
(b) Low voltage
(c) Unbalanced voltage
(d) Improper frequency
(e) Overloaded motor
(f) Polyphase motor attempting to start single phase.

In connection with the first item (a), a motor, of course, cannot start without voltage because there will be no current flowing in either the stator or rotor windings. It is a very simple matter to determine whether or not a motor is supplied with voltage by testing at the stator leads with a voltmeter or test lamps.

Test lamps connected in series can be used on 550 volts and under, and ordinary voltmeters can also be used on such circuits. On higher voltage motors or where the voltage is above the range of the voltmeter, potential transformers should be used.

Fig. 463-A shows a method of using either lamps or a voltmeter to test for voltage at the terminals of a 440-volt motor. Whichever the device used for testing, the test should be made from A to B, B to C, and A to C, to make sure that all phases are alive or supplied with the proper voltage.

Fig. 463-B shows a method of testing the leads of a high-voltage motor using a potential transformer with the voltmeter.

Failure of voltage at the stator leads to a motor may be caused by an open circuit in the line, such as blown fuses, open circuit breakers or switches, failure of the entire power supply, loose connection, or bad contact on the controller, etc.

In testing for item b, a voltmeter should be used at the motor terminals. As the starting torque of an induction motor varies with the square of the applied voltage, the motor will be unable to start its load if the voltage is considerably below normal or that voltage for which the machine is rated.

If the line voltage is found to be correct the trouble may be that the starting compensator or resistance is reducing the voltage to the stator ter-

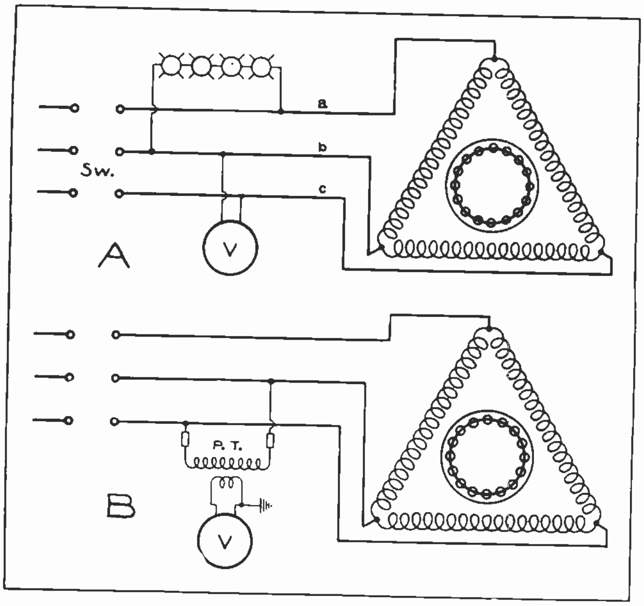

Fig. 463. The above sketches show connections for voltage tests on leads of three-phase squirrel cage motors.

minals too much. This can be corrected by changing the taps on the auto transformer or, in the case of rheostat starters, by cutting out more resistance.

Badly unbalanced voltages will considerably reduce the starting torque, running torque, and efficiency of a polyphase motor. A voltmeter can be used to detect this condition by a test across all three phases as for item "a".

Unbalanced voltages may be caused by any of the following:

1. Unequally distributed single-phase loads on a three-phase system. (See Fig. 464-A.)
2. Entire system supplied with single-phase power but alive with three-phase power, due to phase converter action of three-phase motors. Fig. 464-B shows how this may occur with an open in one phase as shown and a three-phase motor operating lightly loaded from one phase. The phase wire which is open will be supplied by a certain amount of voltage through the stator windings of the running motor.
3. Transmission-line voltage unbalanced because of no transpositions.
4. Wrong connections on transformers or use of transformers having widely different characteristics.

Improper frequency is not very often the cause of motor failure, except in cases where motors have just been installed and are being started for the first time. In such cases motors of one frequency may have been installed on a supply line of another frequency.

Check the name-plate frequency of the new motors with that of older motors which have been successfully operated on the system, or make a frequency meter test on the line.

439. OVERLOAD AND SINGLE-PHASING

A motor suspected of not starting on account of overload should be tested for other troubles to make sure that the cause actually is overload. If the motor tests okay in other respects and is supplied with the proper voltage and frequency it will make a good attempt to start and will generally produce a loud humming noise.

Place an ammeter in each phase lead to the motor. If these instruments register currents considerably greater than the full load current rating of the machine it is fairly safe to assume that the motor is overloaded. Try to turn the load by using a wrench on the shaft, and compare the pressure required on a one-foot wrench handle with the starting torque of the motor.

Three-phase motors which are loaded will not start unassisted when single-phase power is applied. Single-phasing may be due to a blown fuse, broken line-wire, loose connection, broken lead at the controller or motor, bad contacts on controllers, etc.

It might seem at first thought that a three-phase motor with one wire open would still be supplied with two-phase power. This, however, is not the case; with one wire open there are only two wires remaining closed and over two wires it is possible to get only single-phase energy. A third wire is needed to complete the circuit for the impulses of the other two phases at alternate periods.

One of the best ways to test for single-phasing is to place an ammeter in each line wire at the motor terminals. The line which is open will give a zero reading on the ammeter.

Testing with voltmeters or lamps will locate a dead phase if the leads are disconnected from the stator winding; but these tests may be somewhat misleading if the line leads are connected to the

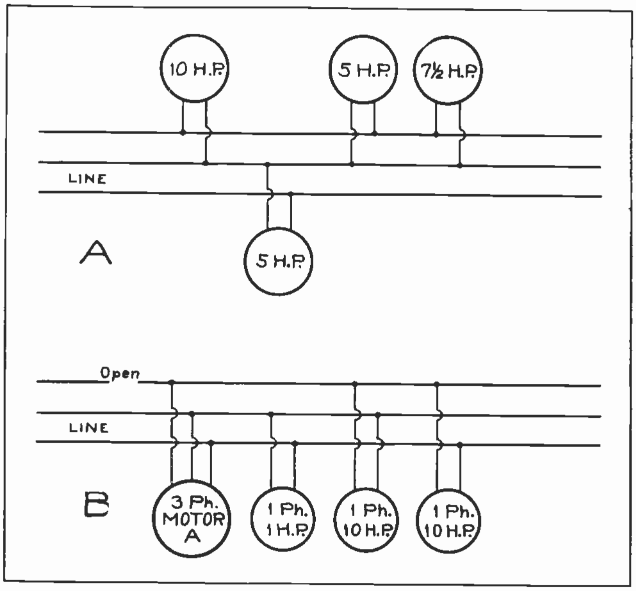

Fig. 464. Unbalanced voltage on three-phase circuits can be caused by unbalanced loads as at "A", or by an open on the line side of a polyphase motor as at "B".

stator, because the voltage drop due to current flowing through the windings from the live phase will cause voltmeters or test lamps to give an indication on the dead phase as well. (See Fig. 465).

While the voltmeter on the left would give higher readings than the others, they would all indicate some voltage. For this reason an ammeter test is the most dependable.

440. REASONS FOR MOTORS OVERHEATING

Winding troubles, such as shorts, grounds, opens, reversed coils, oil soaked coils, etc., which cause overheating of A. C. motors, have been covered in Section Two of Armature Winding.

In addition to these troubles within the windings, motors may be caused to overheat by any of the following:

(a) Low voltage
(b) High voltage
(c) Improper frequency
(d) Single-phasing of three-phase motors
(e) Overloaded motors
(f) Poor ventilation.

If the voltage applied to the terminals of an A. C. motor is either considerably below or considerably above that for which the motor is rated the machine will overheat.

As the torque of an A. C. induction motor is proportional to the square of the applied voltage, when the voltage is low the machine cannot produce its rated torque and drive the load without drawing excessive current.

If the line voltage is too high it will force an excessive amount of current through the motor windings, whether the machine is loaded or not. A voltmeter can be used to easily determine whether the line voltage is correct for the design of the motor, by comparing the meter reading with the voltage given on the name-plate of the motor.

Attempting to operate a motor designed for one frequency on a line of another frequency will cause the machine to overheat if the difference in frequency is more than five or ten per cent.

Frequency can be checked by comparing the reading of a frequency meter, or the name-plate frequency ratings of other motors on the line, with the frequency given on the name-plate of the motor which is heating.

A three-phase motor which is operating on single-phase due to some defect in the line or stator winding will overheat considerably if the load on the machine is much more than 50% of its full load rating. This fault sometimes occurs because of defective running contacts on the controller or starting compensator.

If the starting contacts are in good condition they may supply three-phase energy during starting and thus bring the motor up to speed. If the running contacts are defective the motor may receive only single-phase energy when the controller is thrown to running position.

If the load is not too heavy the motor may continue to run at slightly reduced speed, but it is very likely to overheat in a short time. The test for locating an open phase or determining whether or not the machine is running single-phased has already been explained.

Motors are designed for a certain normal operating temperature at full load, and the full load current is practically always stamped on the name-plate. If this name-plate current rating is exceeded by placing too great a mechanical load on the motor the heating effect will increase approximately with the square of the current increase.

Ammeters placed in the line leads to a motor will quickly show whether or not it is overloaded, by comparing the meter readings with the name-plate current rating.

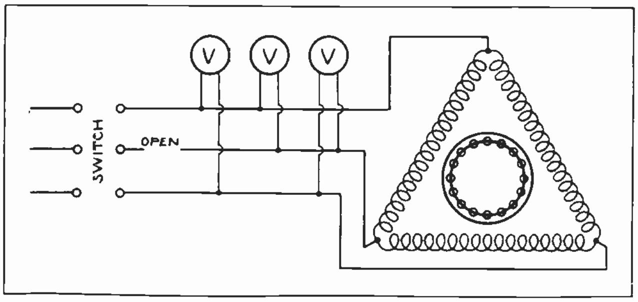

Fig. 465. Sketch illustrating wrong method of testing for an open phase. Ammeters provide a more dependable indication.

Badly worn bearings which allow the rotor to rub or run very close to the stator teeth on one side will also cause overheating.

As all motors develop a certain amount of heat during normal operation this heat must be allowed to escape by radiation or be carried away by circulation of air through the machine, in order to prevent building up excessively high temperatures. If either the radiation of heat from the machine or the circulation of air through it are interfered with, the motor will overheat seriously.

Sometimes, in an attempt to keep moisture or dirt from a motor, the machine is improperly covered in a manner that also prevents the circulation of air and the radiation of heat. In other cases, the ventilating ducts through the winding and core may have become badly clogged with dirt, thus preventing the proper circulation of cooling air.

441. INSULATION TESTS WITH MEGGER

A megger test of the insulation resistance of any electrical machine is usually a fair indication of the condition of the insulation.

Machines on which the windings are soaked with oil or moisture or have old and defective insulation will give a much lower reading in megohms than machines of the same type and size with good new insulation.

As the insulation resistance should depend on the size and voltage rating of any machine, these factors should be considered in determining the proper resistance standard with which to compare test readings.

The following simple formula can be used for this purpose:

$$\text{Megohms should} = \frac{\text{rated voltage}}{\text{kw. rating} + 1000}$$

For example, a 20-h. p., 440-volt motor with good insulation should test .433 megohms or 433,000 ohms or more.

As:

20 h. p. = 20 × 746, or 14,920 watts, or 14.92 kw. then,

$$\text{Megohms} = \frac{440}{14.92 + 1000}, \text{ or } \frac{440}{1014.92}, \text{ or } .433+$$

As previously explained, if megger readings taken at successive inspection periods show continually decreasing insulation resistance on a certain machine, it indicates failing insulation due to aging, overheating, moisture, oil, or some such cause.

When drying out machines with damp windings, megger tests should show higher and higher resistance readings as the moisture is removed.

When further drying will not increase the insulation resistance any more, it indicates that the moisture is practically all out of the windings.

Megger tests are made by connecting one lead of the instrument to the machine winding and the other lead to the frame. Then turn the hand generator crank until the voltmeter element indicates proper D. C. voltage, and read the resistance in megohms from the ohmmeter scale.

442. DIELECTRIC TEST

Another common test for the insulation of electric machines is the dielectric test, which is made by applying a certain excess voltage to the windings and frame of the equipment to see if the insulation will break down and ground the winding, or if it is good enough to stand the voltage without puncturing.

The standard voltage to use for the dielectric test is found as follows:

$$2 \times \text{rated voltage} + 1000$$

For example, the voltage to use for the dielectric test on a 20-h. p., 440-volt motor, would be:

$$2 \times 440 + 1000 = 1880 \text{ volts.}$$

Small portable test transformers with adjustable taps or rheostats used in their primary circuits to vary the secondary voltage can be used for making dielectric tests.

443. SINGLE-PHASE MOTOR TROUBLES

As certain types of single-phase motors use commutators and short-circuiting devices, centrifugal switches, etc., their failure to start or operate properly may be due to defects in one of these devices as well as to faults in the windings or failure of line supply.

On single-phase motors of the repulsion-induction type the centrifugal commutator short-circuiting device is supposed to leave the commutator free of the short circuit during starting and then to short circuit the commutator when the motor is fairly well up to speed.

If this short-circuiting device fails to operate properly the motor may not start or it may not come up to full speed. Failure of the short-circuiting device may be due to its becoming clogged with hardened oil and dirt, to worn out parts, burned or pitted contacts, dry or unlubricated moving parts, or the weakening or breaking of springs.

All single-phase commutator-type motors use brushes which are subject to the same troubles as those of D. C. machines. These troubles and their remedies were thoroughly covered in the Direct Current Section.

Repulsion-induction motors are the most common type which have commutator and brushes, and on these machines the brushes are short-circuited together and must be placed at a certain definite setting.

If loose or high resistance connections develop in the short-circuit path between these brushes or if the brushes slip out of their proper setting, the motor will not operate properly or may not even start.

The proper brush setting for these machines is usually marked on the frame and brush-holder yoke. One common type of marking is as shown in Fig. 466. In the upper sketch there are shown two small marks, "R H" and "L H", on the brush holder yoke; and one small mark on the frame.

When these marks bear the relative positions shown in this sketch the brushes are at neutral and

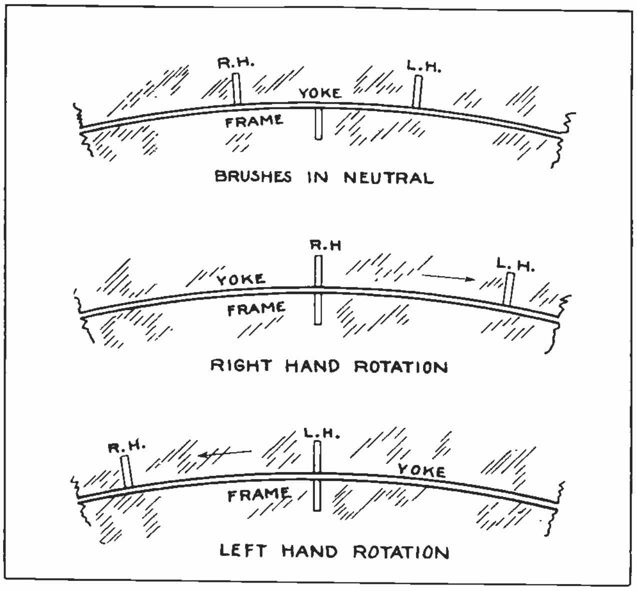

BRUSHES IN NEUTRAL

RIGHT HAND ROTATION

LEFT HAND ROTATION

Fig. 466. The above sketches show markings on motor frame and brush yoke, for setting repulsion motor brushes for right or left-hand rotation.

the motor would probably not start in either direction. With the brush yoke shifted until the "R H" mark lines up with the mark on the frame, as shown in the center sketch, the motor should rotate in a right-hand direction and should give its full rated speed and torque.

When the brush yoke is shifted so that the "L H" mark lines up with the mark on the frame, as shown in the lower sketch, the motor should run in a left-hand direction.

Other troubles, such as dirty brushes, poorly fitted brushes, brushes stuck in the holders, poor brush tension, loose pig tails or connections, high mica, etc., apply to commutator type A. C. motors as well as to D. C. machines.

The centrifugal switches of fractional horsepower, single-phase, split-phase motors often cause failure of these motors to start or run properly, due to these switches becoming stuck with dirt and grease, developing loose or burned contacts, improper spring tension, broken or bent parts, etc.

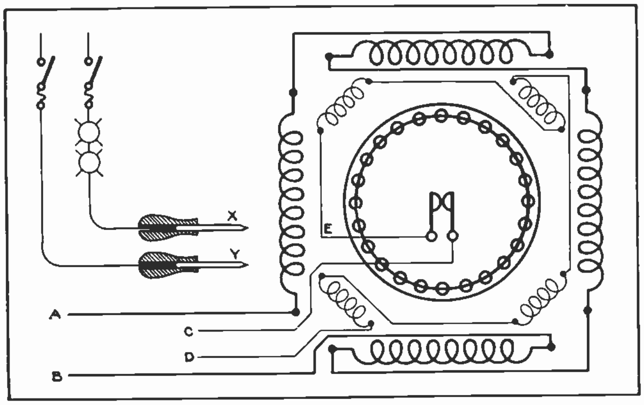

Fig. 467. Diagram illustrating connections and methods for convenient trouble tests on single-phase split-phase A. C. motors.

444. TESTING SINGLE-PHASE, SPLIT-PHASE MOTORS

A convenient method of testing single-phase, split-phase motors to locate most of their common troubles is shown in Fig. 467. A set of test lamps and fuses are shown connected to a pair of test leads, "X" and "Y", with insulated handles.

The test lead "Y" should be connected in series with a fuse to the ground wire of the single-phase system, and the test lead "X" should be connected in series with a pair of test lamps and a fuse to the "hot" wire.

In testing for grounds, place Y on the frame of the motor making sure that it is not insulated from the iron by paint or grease. If the motor is not grounded the lamps should not light when X is touched to either A, B, C, D, or E.

If the lamps do light when X is touched to a or b, it indicates that the running winding is grounded. If the lamps light when X is touched to C, D, or E, it indicates that the starting winding or switch is grounded.

In testing for crosses or shorts between the starting and running windings, connect Y to either A or B. When X is touched to C, D, or E, the lamps should not light. If they do, it indicates a cross or shorted connection between the two windings.

In testing for "opens" in the running winding, connect Y to A and X to B. If the lamps fail to light it indicates that the running winding is open-circuited.

In testing for opens in the starting winding, first test the entire winding circuit by connecting X to C and Y to D. If the lamps do not light the circuit is open.

Next connect X to C and Y to E. If the lamps light the centrifugal switch is closed as it should be when the motor is idle. Then connect Y to D and X to E, and if the lamps do not light it indicates that the starting winding is open regardless of the position of the switch.

445. PRECAUTIONS IN STARTING NEW MACHINES

When starting up for the first time new machines such as motors, generators, converters, transformers, etc., you should exercise particular care and observe carefully a number of important items. No properly trained electrician with any respect for his job or the equipment of which he is in charge will ever start up a new machine and leave it to run unobserved.

Before the machine is started its entire circuit and all switches and connections should be carefully checked over, and care should be taken to see that no foreign objects or dirt are anywhere in the machine.

Check carefully the oil in bearings, the movement of oil rings, and also the ventilating air or cooling water supply to the machine. If these things are not carefully done it may result in considerable damage to the new equipment as well as danger to yourself or other workmen.

All new electrical machinery that has had any chance to become damp, and particularly that of high voltage and large capacity, must be thoroughly dried out before operating. This applies also to old equipment which has not been used for some time and may have absorbed considerable moisture.

The windings may be dried out by means of electrical heaters or steam coils and fans, or by allowing current not much in excess of full load value to flow through the windings at low voltage until the heat thus caused has evaporated the moisture.

One or more electric fans used to circulate the warm air from heaters through and around the windings will greatly reduce the time required for drying. Small machines or windings can be dried out conveniently in ovens, if they are available.

In some cases the drying out of large machines can be speeded up by building a temporary enclosure around them and placing heaters of some sort inside this enclosure. Sheet metal will serve very well for such enclosures and asbestos board is excellent because of its heat-resisting and insulating qualities.

Never fail to have plenty of clean, dry air circulating through any ovens or enclosures used for drying out electrical equipment, as this circulating air is necessary to carry away the evaporated moisture.

New machinery or machines which have not been running for some time should always be carefully watched for unusual sounds or vibration which may be caused by single phasing; reversed phases; loose mechanical parts such as end shields, bearings, pulleys, rotor bars, coil wedges, etc. Loose laminations in stator or rotor cores will often set up loud humming noises.

Excessive vibration of the entire machine may be caused by improperly balanced rotating parts. Unusual vibration and noises are often caused by shorted coils or other defects in the windings on either rotors or stators.

All machinery should be carefully and frequently observed for signs of overheating. Overheated windings or bearings will generally give off an odor of hot or burning insulation or oil, and when any odors of this nature are first noticed the machine should immediately be shut down and the source of trouble located and corrected.

By shutting down motors and feeling the various parts of stator and rotor windings any spots which are particularly hotter than others can be located, thus helping to determine where the trouble is.

446. USE OF TEST INSTRUMENTS

We have previously mentioned and will again emphasize here, the fact that any up-to-date plant should have a sufficient number of proper meters for testing and checking electrical machinery and circuits, and the electrical maintenance man should do everything in his power to see that these instruments are on hand and in good condition.

Much trouble and lost time can be saved by making the proper tests on new machinery and its circuits when the machines are installed, and also by testing machines for overloads and abnormal circuit conditions after they are running. Additional money can also be saved by making occasional efficiency and power factor tests on various machines and circuits, if the proper meters for this work are available.

447. IMPORTANCE OF CLEANING

Always remember that it is very important to keep all electrical machinery well cleaned and free from collections of dust, dirt, and oil. Regular and thorough cleaning will greatly prolong the life of insulation and will help to reduce operating temperatures and increase the efficiency of any electrical equipment.

Dust can be blown out of windings by means of portable electrical blowers such as shown in Fig. 468; or, if blowers are not available, by wiping and brushing out windings with rags and soft brushes having long insulated handles.

Oil or grease can be wiped off windings with rags or waste, and the windings can then be washed with gasoline or benzine to thoroughly cleanse them of all oil or grease which may have started to soak into the insulation.

Mixing carbon-tetra-chloride with gasoline or benzine in mixtures of about half and half, will greatly reduce the fire hazard and the possibility of an explosion when using these solutions for cleaning.

After washing with such solutions to remove grease and oil, windings should be thoroughly dried and then given one or more coats of good air-dry insulating varnish. Varnish of this kind can be obtained in small or large cans from electrical supply houses and should always be kept on hand in any electrical maintenance shop. It helps to fill small cracks which develop in the insulation and thereby keeps out dirt, oil, and moisture and thus greatly increases the life of the equipment.

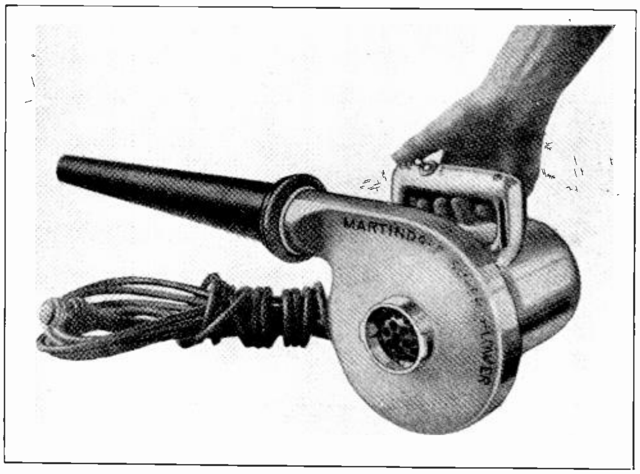

Fig. 468. Convenient portable electric blowers of the type shown above are often used for cleaning dust from electrical machines.

448. CONTROLLERS

In order to secure proper starting and operation of A.C. motors it is necessary to keep their starters and controllers in good condition. Controllers should be given the same regular inspection as motors, and a regular form similar to the one shown for motor inspection can be used to cover the inspection of all moving or wearing parts, contacts, terminals, relays, overload protective devices, etc.

Controller terminals should be frequently inspected to see that they have not worked loose by vibration, and all contacts at which circuits are made and broken should also be frequently inspected to see that they are not partly burned and making poor or high-resistance connections.

As soon as contacts become severely burned or pitted they should be carefully filed smooth and bright, and when worn or pitted beyond the possi-

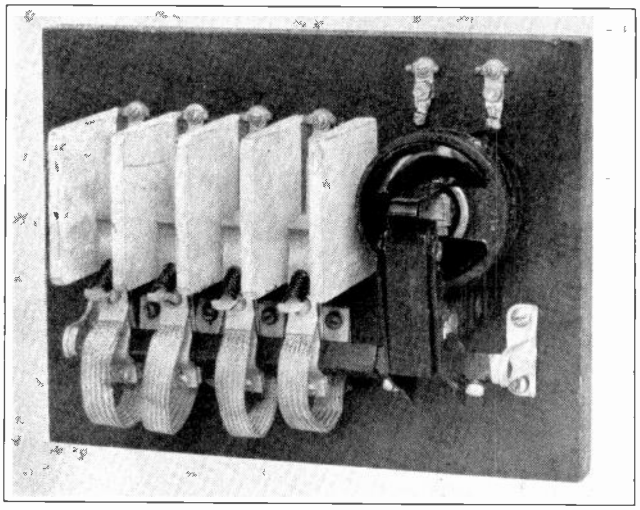

Fig. 469. Photo of contactor panel of an A. C. motor controller. These contacts and their connections require frequent attention by the maintenance electrician.

bility of efficient repair by this method the contact faces or shoes should be replaced with new ones.

Flexible connections and pig tails to movable controller contacts should be inspected frequently to see that they are not partly or wholly broken off due to repeated bending. These flexible connections can easily be replaced with new ones obtained from the manufacturer or by short pieces cut from a stock of flexible copper braid of the proper sizes, which should be kept on hand for just this purpose.

Contact springs, arcing tips, arc barriers, etc. should also be given frequent inspection and repaired when necessary.

It is particularly important that all overload-release coils, no-voltage coils, time-element devices, and other protective relays and equipment on controllers be kept in good adjustment and condition, in order to protect both the controller and the motor which it operates.

On starters of the remote control type the push buttons and their contacts should also be inspected and kept properly maintained, as these little devices may otherwise be the source of considerable trouble and may cause the controller and motor both to fail to operate, just because of some dirty contact or loose connection at the push button station itself.

449. GENERAL

Some form of convenient speed indicator or revolution counter such as shown in Fig. 472 should be kept on hand among the maintenance man's tools for the purpose of checking the speed of various motors and driven machinery.

Reduced speed below that of the name-plate rating is often an indication of an overloaded motor, reduced line-voltage; or of some trouble which may be developing in the machine.

A convenient portable test lamp with an insulated handle, lamp protecting guard, and extension cord should also be available for making emergency repairs on machines located in dark corners and for examining the insides of controllers or large motors.

The small hook shown on the end of the guard provides a convenient means of supporting the lamp in places where work is to be done. Lamps of this kind are often provided with an extra wire on the extension cord for grounding the lamp socket and guard, thus affording added protection from shock hazard in case of a defect in the socket.

Another very convenient device for the electrician to have is one of the small pocket-size circuit testers of either the magnetic or neon tube type, for testing to see if low-voltage circuits are alive or not and approximately what their voltage is.

450. STOCKING OF SPARE PARTS

A maintenance man should always give considerable thought to stocking or keeping on hand at least a few of the spare parts most commonly needed for repairs and replacement on the motors, controllers, and other devices which he may be maintaining. Even in plants where this has not been the practice a trained man can make his services much more valuable and save a great deal of time and money for his employer by determining as quickly as possible what parts are most often needed for repairs and replacement, and then recommending the purchase of a small supply of these parts to have on hand at all times.

This is a particularly great advantage when the plant or equipment is located at some distance from the supply house or manufacturers from whom repair parts can be obtained, as in such cases having the parts on hand saves considerable time in repairing and putting the machines back into service.

In large plants such stock parts should be neatly and systematically located and arranged in bins or shelves which are marked so that any particular part can be located.

Attaching to the repair parts themselves proper tags with complete markings and data will often

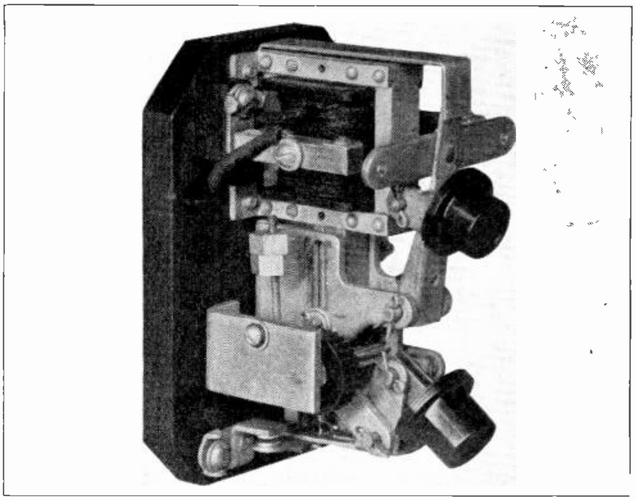

Fig. 470. Push button station with cover removed to show contacts and relay magnet.

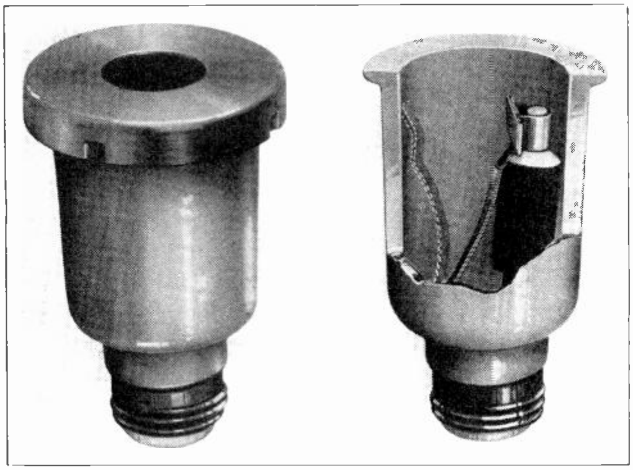

Fig. 471. Convenient plug type thermal relay for protection of circuits to small motors and other equipment.

help to quickly select the proper part for a certain machine.

A few of the small parts more commonly required may be carried in the tool kit of the maintenance man.

What spare parts should be kept on hand depends a great deal upon the amount and type of equipment in use in the plant. They may range all the way from small screws, springs, bolts, nuts, pig tails, contact shoes, brushes, relay coils, field coils, fuses, etc. to complete spare rotors or armatures, or even complete spare motors, transformers, oil switches, etc.

Small companies could not, of course, afford to carry these larger spare parts and machines; but in large plants, where dozen or hundreds of machines of one type may be in use, having on hand a spare motor or controller which can be used to quickly replace one of the others which has become defective, allows the defective unit to be taken out of service and repaired at leisure without very much loss of time due to shut-down of the driven equipment.

Some of the parts most commonly carried in stock are as follows:

1. Bearings
2. Controller and switch contacts
3. Brushes
4. Bearing oil
5. Oil for starters and and oil switches
6. Fuses (plug and cartridge type)
7. Supply of the most commonly used sizes of wire
8. Cable lugs
9. Insulators and pins
10. Solder, flux and tape
11. Fish paper and varnished cloth
12. Air-dry insulating varnish
13. Wire for rewinding coils, or spare factory-made coils
14. A few lengths of most commonly used sizes of conduit
15. Sandpaper and crocus cloth
16. Screws, nuts, bolts, springs, etc.
17. Condulets, outlet boxes, lock nuts, and bushings
18. Lamps and sockets
19. A few feet of copper bus bar
20. Brush holders.

451. FIRE PROTECTION

The maintenance man should also give some thought to proper fire protection of at least the electrical equipment in his charge. Small portable fire extinguishers located at points near equipment using quantities of oil, or equipment which may cause a certain amount of sparking or flashing, will generally be sufficient protection.

Carbon-tetra-chloride extinguishers can be safely used to extinguish fires on live electrical parts because this liquid is not a conductor of electricity. Most other extinguishers, such as the soda and acid type, and also any water bucket or water hose should never be used until you are absolutely certain that all wires and machine parts have been disconnected and grounded.

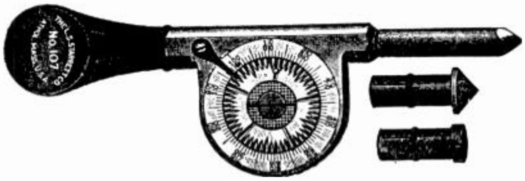

Fig. 472. Revolution counters or speed indicators of the above type are very convenient for checking the speeds of motors and generators.

One of the most modern and efficient methods of fighting fire around electrical equipment is the use of fire-extinguishing gases contained under pressure in metal cylinders equipped with a short length of hose and a tube for directing the gas into the fire or machine which may be burning.

Fig. 474 shows an extinguisher of this type being used to put out a fire in the oil pan of a voltage regulator.

452. SECURING HELP FROM MANUFACTURERS

A great deal of cooperation can be secured from the manufacturers by any maintenance man who will take the trouble to write to them for it. Manufacturers are generally very glad to cooperate with users of their equipment and will furnish internal

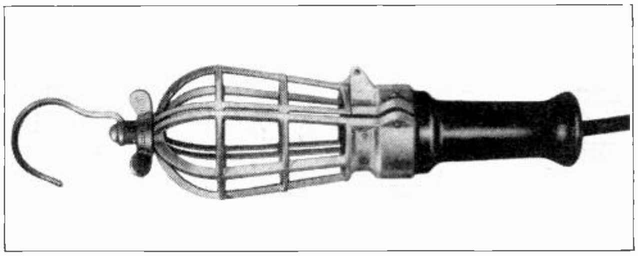

Fig. 473. Convenient trouble lamp with hook, guard, and insulating handle.

and external connection diagrams; instructions for installation, care and operation; data and prices on spare parts; or even to supply one of their expert engineers to help solve certain operating or repair problems with which the maintenance man may have exceptional difficulty.

In writing to manufacturers for any information of this kind you should always give complete nameplate data on the machines or devices for which the information is requested.

Never hesitate to ask the manufacturers any questions about their equipment because they are usually glad to help the maintenance man or operator produce the best possible results with their machines.

453. KEEP UP-TO-DATE

It is also exceedingly well worth while to keep up-to-date as to modern operating and maintenance practice in different plants throughout the country. One way to do this is to suscribe to one or more of the best trade journals covering the class of work you may be doing.

These journals contain interesting articles by leading operating and maintenance engineers and by practical men of long experience in the field. The articles often show actual photographs and illustrations of certain installations and machines, and in many cases they give excellent shop hints and suggestions for improvements and tools and devices with which a great deal of time can be saved in making certain repairs.

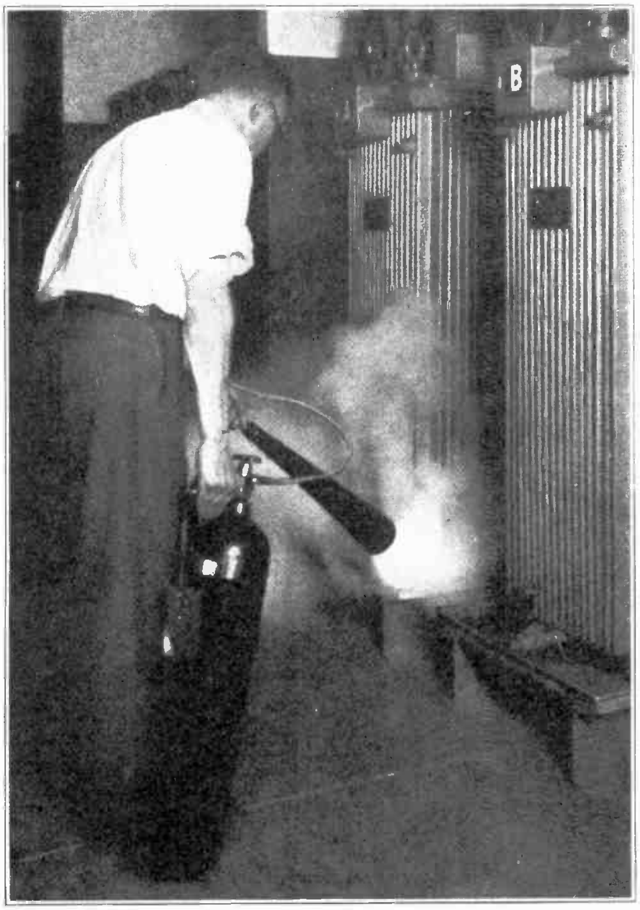

Fig. 474. This photo shows the use of a modern gas type fire extinguisher for fire protection in electric plants.

Fig. 475. This photo shows an installation of A. C. motors in a copper mill. Hundreds of thousands of motors in thousands of electrified factories and plants require the services of trained electrical maintenance men.

Keeping yourself up-to-date in this manner and always looking for new ideas to use to the advantage of your employer is bound to result in more rapid promotion both in responsibility and in salary.

454. OPPORTUNITIES

Always use your head as well as your hands continually on any electrical work you may be doing, and in this manner you will get a great deal more enjoyment out of your work each day; and you are also sure to get more pay out of your envelope if you strictly follow this practice.

The field of electrical construction, operation, and maintenance in all of the various lines such as power plants, industrial plants, telephone companies, railroads, and also in radio, automotive ignition, air craft ignition, etc., offers splendid opportunities to the practically trained man. Very few people fully realize or appreciate these opportunities when they are told about them, and usually not until they have obtained training and made the necessary effort to establish themselves in this great field of fascinating and profitable work.

A knowledge of the principles of alternating current and A.C. devices covered in this section will also be of great value to anyone planning to enter the radio field, because radio equipment utilizes high-frequency alternating current, and many of the fundamental principles of alternating current and A.C. power machinery are so closely related to those of radio circuits and equipment.

A great deal of space and material as well as expense have been devoted to this section on alternating current and we would certainly advise every student to make an occasional review of these sections in order to keep himself thoroughly familiar with the very important material covered in them.

Keep in mind at all times that this Reference Set is just what its name implies, and that it should be used for frequent reference to refresh your memory on any principle of which you are in doubt, or to obtain specific help and instruction on any problem of electrical construction, operation, maintenance, or trouble shooting which you may ever encounter.

The more frequently and constantly you refer to this set for help of this kind the more familiar you will become with the exact location of each subject and the more quickly and easily you will be able to locate practically anything you wish to find within these pages.

COYNE
Electrical School

CHICAGO ~ ~ ILLINOIS

ESTABLISHED 1899

AUTOMOTIVE ELECTRICITY

Principles of Internal Combustion Engines
Carburetion, Ignition, Combustion, Spark Advance
Multiple Cylinder Engines, Firing Orders
Battery Ignition Systems
Parts, Connections, Operation
Ignition Timing, Dual Ignition, Special Distributors
Ignition Locks, Ignition Troubles and Repairs
High Tension Magnetos
Operation, Care and Repair
Starting Motors
Operation, Troubles and Remedies
Automobile Generators
Voltage Regulation, Charging Rate Adjustment
Cutouts, Field Protection, Troubles and Remedies
Automotive Lighting Equipment
General Trouble Shooting on Complete Wiring Systems

AUTOMOTIVE ELECTRICITY

With the tremendous number of automobiles used today for pleasure and for commercial purposes, there is a splendid field of opportunity for trained men in ignition and battery service and general automotive electrical work.

In the year 1929 alone American manufacturers produced approximately 5,000,000 motor vehicles. These and many more millions of automobiles, trucks, tractors, etc., use electricity for ignition and other very essential features of their operation.

One of the reasons for the growth of the automobile industry, which is one of the very largest of all industries in this country, lies in the improved efficiency and convenience obtained through the use of electricity for numerous things in connection with the operation of automobiles, as well as in the great improvements made in their mechanical design.

Electric ignition makes possible the high engine speeds and resulting high efficiencies of the engines used in modern motor cars. In addition to using electricity for ignition, or the igniting and exploding of the fuel at the correct time in the engine cylinders, electricity is also used: to start the engine by means of an electric motor; to provide illumination for night driving; and to operate the horn, windshield wiper, stop light, tail light, dash light and electrical instruments, cigar lighter, heater, and numerous other safety and convenience devices.

In fact, the modern motor car—with its generator, starting motor, storage battery, ignition devices and wiring, lights, horn, and other equipment—can be said to have a complete small electric power plant of its own and it has quite a variety of electrical devices and circuits which must be maintained in the best of condition for efficient operation of the car.

There are throughout the country thousands of garages which require trained electrical service men to take care of the electrical equipment on their customers' cars. This ignition and battery work is in general much cleaner, lighter, and more interesting than making mechanical repairs on automobiles. The salaries paid to experts in this line are generally a great deal higher than those of ordinary mechanics.

There are also thousands of places where a good ignition and battery man can establish a shop or business of his own and just specialize in this branch of automotive repair work.

In addition to the millions of pleasure cars there are in use a vast number of huge trucks and busses for hauling produce and carrying passengers all over the country; and there are also many thousands of tractors, which are becoming more and more extensively used in farming areas.

With the recent developments in automobile radio there is another vast field of opportunity opened up for the man with general training in electricity, radio, and ignition. Millions of automobiles already in use will soon be equipped with radio receiving sets; and, as new cars are made and sold, a great many not equipped with radio sets by the manufacturers will need to have them installed by the trained radio and ignition service man.

The aviation industry also affords tremendous opportunities in good paying and fascinating work for practically-trained ignition men. The safe operation of an aeroplane depends, of course, upon continuous operation of its engines, and the majority of these engines use electrical ignition for igniting their fuel. Therefore, it is extremely important that the magnetos, spark plugs, wiring, and all other electrical equipment on these engines be kept in perfect condition at all times. This work requires men who have a very thorough knowledge of electricity and ignition equipment and affords splendid opportunities to get into the aviation field.

Whether you ever specialize in ignition work or not you will find it very convenient and valuable to have a good general knowledge of this subject in connection with the operation of your own car, as a great deal of time and money can often be saved just by being able to quickly locate and repair some minor electrical trouble in the ignition system or wiring of your automobile.

In order to be thoroughly capable in ignition or automotive electrical service work a thorough general knowledge of practical electricity in its several branches is essential, as well as a knowledge of the operating principles of the common types of internal combustion engines. It is the purpose of this section to show you how the knowledge which you have already obtained of electricity and circuits can be applied to automotive equipment. The operation of common types of automobile engines is also briefly explained.

1. OPERATION OF INTERNAL COMBUSTION ENGINES

It is not our purpose to cover in this material all of the details of theory or design of internal combustion engines, but merely those practical points regarding their operation which will be essential to the automotive electrical service man.

In addition to being able to locate and repair troubles in the electrical wiring and electrical devices on automobiles, trucks, and tractors, the "tuning" of the ignition system is very important.

The term "internal combustion engine" is used on account of the fact that the energy which operates these engines is generated by the combustion or burning of a fuel mixture inside the engine itself.

One of the first commercially practical internal combustion engines was developed in France by J. J. Lenoir in 1860, and was known as a "two-stroke-cycle engine". Later in 1876 this engine was greatly improved by a German named Nicholas Otto who produced an engine of the "four-stroke-cycle type". The basic principles of these latter engines are the same as those on which all automotive engines operate.

As has been previously stated, power is developed within an internal combustion engine by the explosion or burning and expansion of a fuel mixture in a manner to apply pressure to the pistons, which in turn drive the crank shaft and flywheel of the engine.

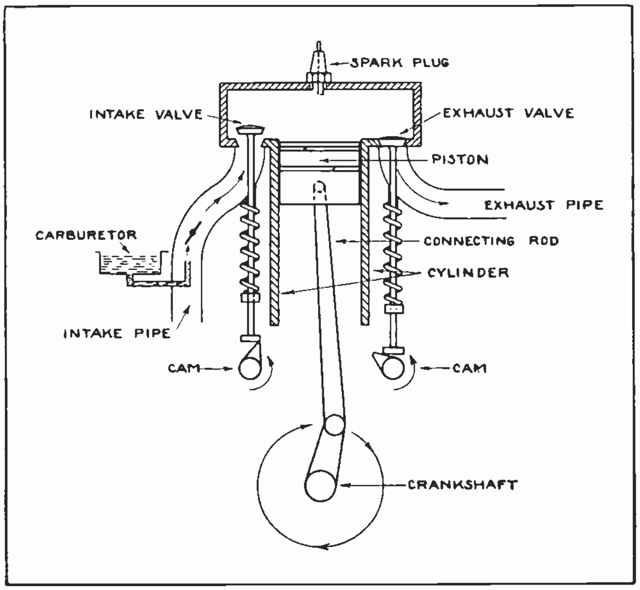

Fig. 1. This diagram illustrates the operating principle of a simple one-cylinder internal combustion engine. Study the diagram carefully while reading the explanation.

For continuous operation of these engines it is necessary to maintain a certain series of events known as a **cycle.** These cycles are then continuously and rapidly repeated as long as the engine operates.

In the four-stroke-cycle engine these steps of each cycle are as follows: 1. Intake of fuel charge. 2. Compression of fuel charge. 3. Ignition and combustion of fuel charge. 4. Exhaust of burned or waste gases.

To complete all of these steps for one cycle in any one cylinder of an ordinary automobile engine requires four strokes of the piston and two revolutions of the crank shaft. This is the reason they are called "four-stroke-cycle engines", or sometimes just "four cycle engines".

Fig. 1 is a simple diagram showing a sectional view of one cylinder of an automobile engine, and shows the following important parts: Cylinder, piston, connecting rod, crank shaft, valves and valve operating cams, and carburetor.

In this diagram the piston is shown at the commencement of the intake stroke; the intake valve on the left is open and the exhaust valve is closed. If the crank shaft is rotated to the right, or clockwise, the piston will be drawn downward on the **intake stroke** and, as it fits tightly in the cylinder, a suction or vacuum will be formed in the combustion chamber and will draw in a mixture of gasoline and air from the carburetor and through the intake pipe.

When the crank shaft revolves far enough so that the piston is about 30 degrees beyond **lower dead center** the intake valve is allowed to close by the cam moving out from under its lower end. Then, with both valves closed, the piston moves up on the **compression stroke.** This compresses the fuel charge into the relatively small space in the cylinder head called the **combustion chamber.**

When the piston arrives at the upper end of its stroke, or **upper dead center,** a spark is forced across the points of the spark plug, igniting the gas charge. Once this mixture of gasoline vapor or gasoline and air is ignited it burns at a very rapid rate. In fact so rapidly that this combustion action is often called an "explosion".

This burning of the fuel creates a very high temperature of about 3000° F. maximum, and an expansion pressure of about 300 to 400 lbs. per square inch which is exerted on the top of the piston.

The pressure is, of course, due to the tendency of the gas to expand when heated. This pressure generated by the rapidly expanding gases, forces the piston to move downward on the **power stroke,** both valves remaining closed until the piston reaches a point about 40° before the lower dead center position. At this point the exhaust valve opens through the action and timing of its cam. This stroke is known as the **power stroke.**

With the exhaust valve remaining open, the piston again moves up to the upper dead center, forcing the burned gases out through the exhaust pipe. The exhaust valve then closes and one cycle is completed. This brings the engine back again to the position first mentioned, with the piston again ready for a downward intake stroke.

As long as the engine continues to operate this cycle is rapidly repeated, with the piston moving up and down and transmitting the force of each power stroke to the crank shaft through the connecting rod. The crank shaft converts this force into rotary movement of the flywheel attached to its end.

2. VALVES, PISTON, CAMSHAFT, CRANKSHAFT, and OTHER ENGINE PARTS

From the foregoing facts it is easy to see the importance and necessity of having the valves operate at exactly the right instant with respect to the position and direction of movement of the piston. This is accomplished by the rotation of the cam shaft, which is connected to and driven by the crank shaft. The valves are normally held closed by the action of springs shown in the diagram in Fig. 1, and are forced open at the proper instant by the rotation of the cams or projections on the cam shaft, which press against the lower ends of the valve stems or push rods which are sometimes placed underneath the stems.

You can also see the importance of having the spark occur at exactly the right instant to ignite the fuel mixture, that is, when the piston is at the top of its compression stroke and just ready for the downward power stroke. The method by which this is accomplished will be explained in later paragraphs.

Fig. 2 shows at the upper right a pair of valves for an automobile engine, and at the bottom is shown the cam shaft which operates the valves by means of the short push rods shown directly beneath the valves on the right. These push rods are located between the cams and the lower ends of the valve stems.

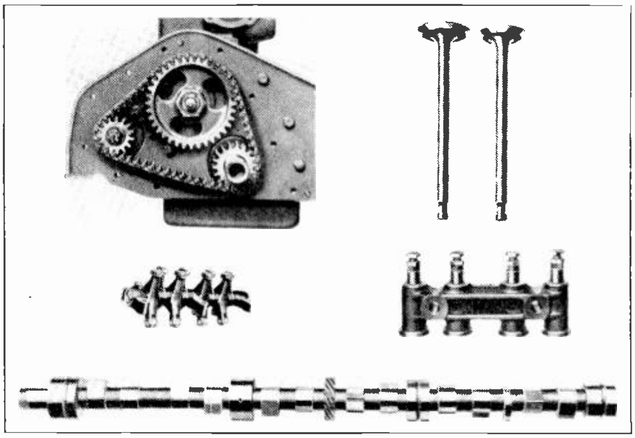

Fig. 2. This figure shows valves, push rods, rocker arms, cam shaft and cam shaft drive gears of an automobile engine. Courtesy Oldsmobile Mfg. Co.

At the upper left in this figure are shown the gears and chain by means of which the cam shaft is driven from the end of the crank shaft of the engine. On engines having overhead valves the valves are often operated by means of long push rods and overhead rocker arms. A set of these rocker arms are shown above the cam shaft on the left in Fig. 2.

Fig. 3 shows at the top a crank shaft and flywheel for a modern 6-cylinder engine. At the lower left in this figure is shown a piston attached to the connecting rod by means of which the piston imparts its energy to the crank shaft.

Note the piston rings which are located in grooves around the top of the piston to secure a tight fit to the cylinder walls and prevent leakage of any of the force from the expanding gases. These rings also help to maintain the proper suction and vacuum to draw in the fuel during the intake stroke.

At the lower right in Fig. 3 is shown the cylinder block of a 6-cylinder engine with the cylinder head removed. In the block you can see the intake and exhaust valves for each cylinder, some of these valves open and some closed. The intake and exhaust ports or openings which admit the gases to and from the valve chambers are shown along the side of the cylinder block. In the cylinder head can be seen the combustion chambers with their spark plug openings. When the head is in place on the cylinder block these combustion chambers each fit directly above their respective cylinders and valves.

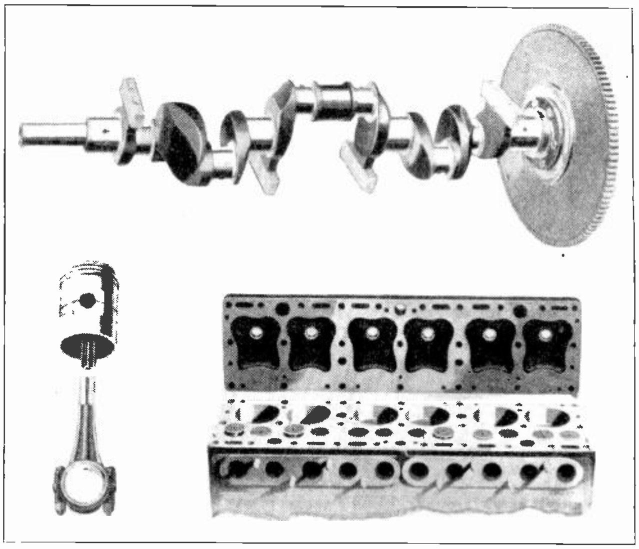

Fig. 3. At the top of this figure is shown a crank shaft and flywheel for a modern six-cylinder engine, and below are shown a piston and connecting rod and the cylinder block with the head lifted to show the cylinders, valves, etc. Courtesy Oldsmobile Mfg. Co.

Fig. 4 shows an excellent sectional view of the end of an automobile engine of the side valve or L-head type. In this view the piston can be seen at the top of the cylinder and the connecting rod is shown leading from the piston to the crank shaft. Just above and to the left of the lower end of the connecting rod can be seen the end of the cam shaft with one cam projecting to its left. The push rod can be seen directly above and resting upon this cam, and above the push rod are the valve and valve spring. The tubular guide through which the valve stem slides up and down is called the "valve guide".

The intake and exhaust manifolds are shown projecting from the left of the cylinder block, and the passage through which the exhaust gases leave the cylinder through the valve can be clearly seen. The spark plug is located on top of the combustion chamber, and is connected by a wire to one of the terminals of the ignition distributor mounted on top of the engine.

3. VALVE TIMING

Theoretically each stroke of an automotive engine begins and ends at either the **upper dead center** or **lower dead center,** and we might think that the valves should open and close at these positions. However, in actual practice the valves are timed to open and close at points earlier and later than the exact upper and lower dead centers, because of the inertia of the gases.

For example, the closing of the intake valve is usually delayed to about 30 degrees after lower dead center (L.D.C.), in order to allow the engine to draw in the maximum gas charge and develop its maximum power. During the intake stroke the column of gas mixture moves through the intake manifold to the cylinder with a velocity of about 200 feet per second, and the gas due to its momentum continues to crowd into the cylinder even after the piston has passed L.D.C.

As long as this gas fuel is flowing into the cylinder the valve should remain open, in order to take in the maximum fuel charge; and this is the reason for delaying the closing of the intake valve until about 30 degrees after L.D.C.

On the power stroke the exhaust valve generally opens when the piston reaches a point about 40 degrees before L.D.C., thus allowing the exhaust gases to start their escape while there is still a little pressure in the cylinder (approximately 50 lbs. per square inch). This loses a little of the pressure from the fuel combustion, but it actually increases the total power of the engine by effecting a more thorough cleaning or scavenging of the exhaust gases from the cylinder, and also by eliminating all back pressure on the piston as it starts to move up on the exhaust stroke.

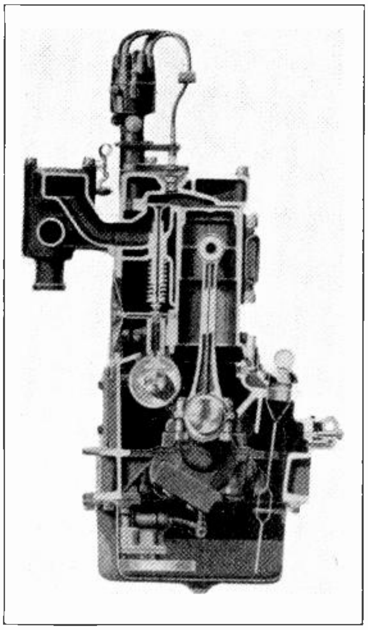

Fig. 4. This sectional end-view of a modern automobile engine clearly shows the arrangement and location of important parts such as piston, connecting rod, crank shaft, cam shaft, valves, etc. Courtesy Oldsmobile Mfg. Co.

When the U.D.C. is reached the exhaust valve closes, and about 10 degrees later the intake valve opens. The purpose of this slight delay in the opening of the intake valve is to create a slight vacuum in the cylinder before opening it, and also to eliminate the possibility of fuel loss through the exhaust valve which has just closed.

Fig. 5 is a diagram illustrating this valve timing or the points at which the valves open and close with regard to upper and lower dead center in each revolution of the crank shaft. In this figure the time is expressed in degrees of crank movement, allowing 360 degrees for one complete revolution of the crank shaft.

The diagram not only shows the positions at which the valves open and close but also shows in degrees the length of the intake, compression, power, and exhaust strokes.

The timing values given in this diagram represent popular or general practice, but it should be remembered that different engines require widely varying valve timing, according to their design, speed of rotation, compression used, fuel efficiency, etc.

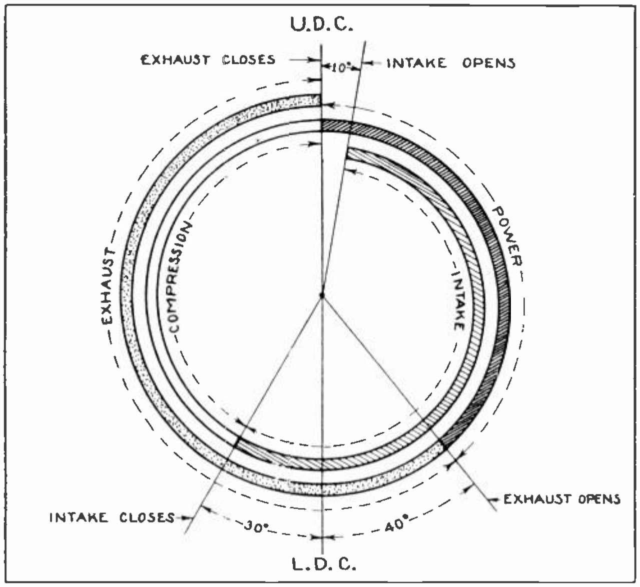

Fig. 5. Diagram illustrating valve timing or showing the points at which the valves open and close, and also showing the degrees of open and closed periods during each revolution of the crank.

4. PRINCIPLES OF CARBURETION

The purpose of the carburetor on an automobile engine is to supply the proper mixture of gasoline vapor and air for fuel to be burned in the cylinders. The carburetor also provides a means of controlling the speed and power output of the engine by admitting more or less fuel under the control of a throttle valve.

Raw gasoline will not burn in the cylinders, so the function of the carburetor is to mix a spray or jet of gasoline with a proper amount of air to provide combustible fuel.

Fig. 6 is a diagram showing a sectional view of a simple elementary type of carburetor. The gasoline enters the fuel bowl through a small tube or pipe from the gas tank, vacuum tank, or fuel pump. The float in the fuel bowl automatically keeps the gasoline at the proper level in the bowl by shutting off the flow from the pipe whenever the float rises high enough. From the fuel bowl the gasoline is drawn through either the high-speed jet or low-speed jet,

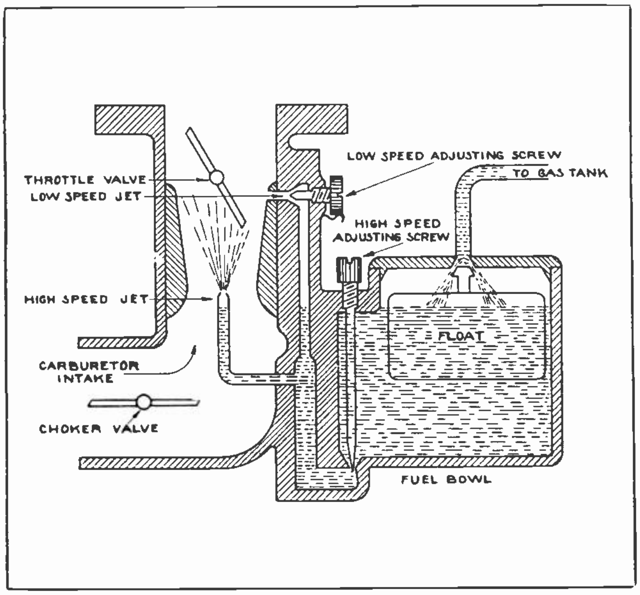

Fig. 6. Diagram showing a sectional view and the operating principles of a simple carburetor used for supplying the proper mixture of gasoline and air for fuel to the engine.

according to the speed at which the engine is operating. Note the positions of these jets in Fig. 6.

As long as the engine operates at moderate or high speeds, the rapidly repeated intake strokes of the pistons in the various cylinders maintain a practically constant suction, which draws a steady stream of air in through the carburetor barrel and intake manifold. This air, rushing upward through the narrow or restricted opening in the carburetor barrel, sucks gasoline from the high-speed jet in the form of a fine sray which mixes thoroughly with the air, and passes on into the cylinders as combustible fuel as long as the throttle valve is open.

When the throttle valve is closed it cuts off the supply of gasoline from the high-speed jet and creates a higher vacuum or suction above the valve. This raises the gasoline and draws it from the low-speed jet for idling or low speed operation of the engine.

For satisfactory engine operation the proper mixture or proportion of fuel and air must be maintained at all times. If there is too much gasoline the mixture is said to be too "rich", and this will cause irregular operation and may stop the engine entirely. **An excessively rich mixture is generally indicated by heavy, black smoke coming from the exhaust pipe.**

If, on the other hand, there is too little gasoline and too much air, the **mixture is said to be too "lean", and the engine will misfire and lack power.**

For average conditions a mixture consisting of about sixteen parts of air to one part of gasoline (by weight) gives the best results. A mixture of less than seven parts of air to one of gasoline is too rich to burn at all, while at the other extreme more than twenty parts of air to one of gasoline will cause the engine to misfire and develop very little power.

When starting up a cold engine a rich fuel mixture is required, and to obtain this a choker valve in the lower end of the carburetor barrel is partly closed in order to shut off part of the air and create a higher suction at the fuel jets and draw more gasoline. As soon as the engine is running smoothly and slightly warmed up, this choker valve should be opened to again thin the fuel mixture and prevent fouling of the spark plugs and cylinders.

From the preceding explanation of carburetor principles it is easy to see the importance of correct carburetion or carburetor adjustment for smooth and efficient operation of an internal combustion engine.

The adjustments for the high-speed and low-speed jets are made by adjustable needle valves which control the flow of gasoline to each jet. The one marked "low-speed adjustment" controls the flow of fuel issuing from the jet located in the carburetor barrel above the throttle valve, and which is generally known as the idling jet. This jet supplies the fuel up to speeds of about twenty miles per hour in high gear.

As the throttle is opened farther than this it breaks the high suction at the upper jet and will not draw the gasoline up to this level any longer. From this point on the fuel is supplied by the lower jet for the higher speeds.

Fig. 7 shows a photograph of a modern carburetor of a dual type design, for use on 8-cylinder engines. You will note the fuel bowl on the left and the air intake opening on the right. The openings which connect with the intake manifold on the engine are shown on the top. The adjusting screws for both the high-speed and low-speed jets can be clearly seen in this view. You can also see the levers which operate the throttle and choker valves.

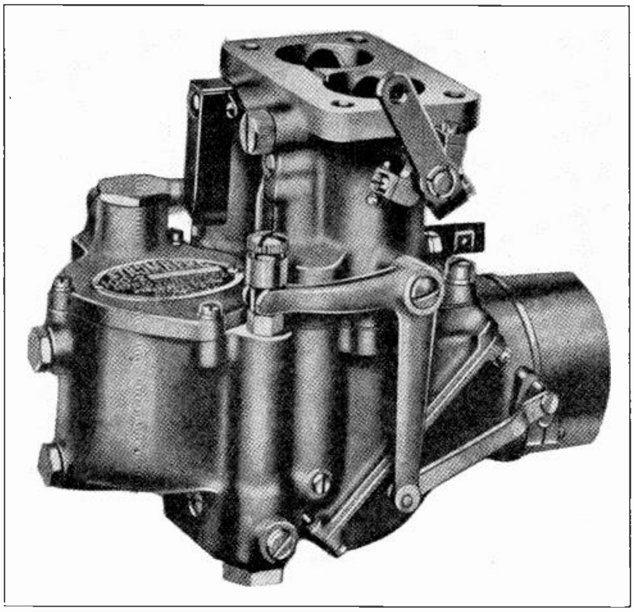

Fig. 7. Photograph view of a double or twin barrel carburetor with some of the operating levers and adjustments in plain view.

Improper carburetor adjustment will often cause faulty and irregular operation of the engine that is sometimes blamed upon the ignition or valve timing; so, when "tuning" an engine one should make sure that the carburetor is properly adjusted for smooth operation.

5. FUEL COMBUSTION and SPARK ADVANCE AND RETARD

When the fuel charge that is supplied to the cylinders by the carburetor is ignited by a spark from the plug it requires a very small fraction of a second for the flame to spread throughout the entire charge in the combustion chamber. In other words, the combustion of the gasoline vapor is not actually an instantaneous explosion, but instead requires a certain small period of time after the charge is ignited before combustion is complete.

The period of time required between ignition and the complete combustion of the fuel depends on the amount of compression, the type of fuel used, the shape of the combustion chamber, location of the spark plug, etc. On an average, this time period is about .003 of a second.

In order to obtain maximum pressure on the piston the ignition spark should be timed so that combustion will be completed just when the piston is on upper dead center. Because of the short period of time between ignition and complete combustion **the spark must, therefore, occur at some point slightly ahead of the upper dead center position** or just before the piston reaches this point.

This is known as **advancing the spark**, and is very important in obtaining maximum speed and power for modern automobile engines, because at the speed these engines operate the piston will travel a considerable distance in even as small a period of time as .003 of a second. Just how far the spark should be advanced depends upon the operating speed of the engine, the degree of compression used, and the grade of fuel.

As the amount of spark advance depends upon the engine speed, it is generally necessary to advance and retard the spark according to the speed at which the car or engine is being operated. This enables one to obtain the maximum power both at low speeds, such as when climbing steep hills, and also at high speeds on good level roads.

Ordinarily the spark is so timed that during low-speed operation of the engine ignition will occur when the piston is at U.D.C. The spark is then advanced as the speed of the engine is increased. This is usually accomplished by rotating the ignition timing device or distributor, and thus causing the spark to occur a little earlier with regard to the piston stroke.

On some cars this spark adjustment is made by hand from a control on the steering wheel, while on many of the modern automobiles it is made automatically by a sort of governing arrangement which operates whenever the engine changes speed.

Excessive spark advance will cause the engine to knock while insufficient advance will result in a loss of power and overheating of the engine.

Generally the best position of spark advance for any certain speed is reached when a little more advance will cause the engine to knock. The amount of spark advance varies from 15 to 60 degrees in different types of pleasure cars, according to the design of the engine.

The method of adjusting the spark advance and retard mechanism will be covered later in connection with ignition distributors.

6. ARRANGEMENT OF VALVES

One of the most important things in gasoline engine design, and one that has a material effect on their efficiency and operating characteristics is the shape of the combustion chamber and the arrangement of the valves. The valves which admit the fuel and discharge the burned gases from the cylinder may be placed either alongside the cylinder as in "side valve" engines or they may be in the cylinder head as in "overhead valve" engines.

Fig. 8 shows the four different valve arrangements, giving both side sectional views of the cylinder and top views looking down on the cylinder and valves. At "A" both valves are located in

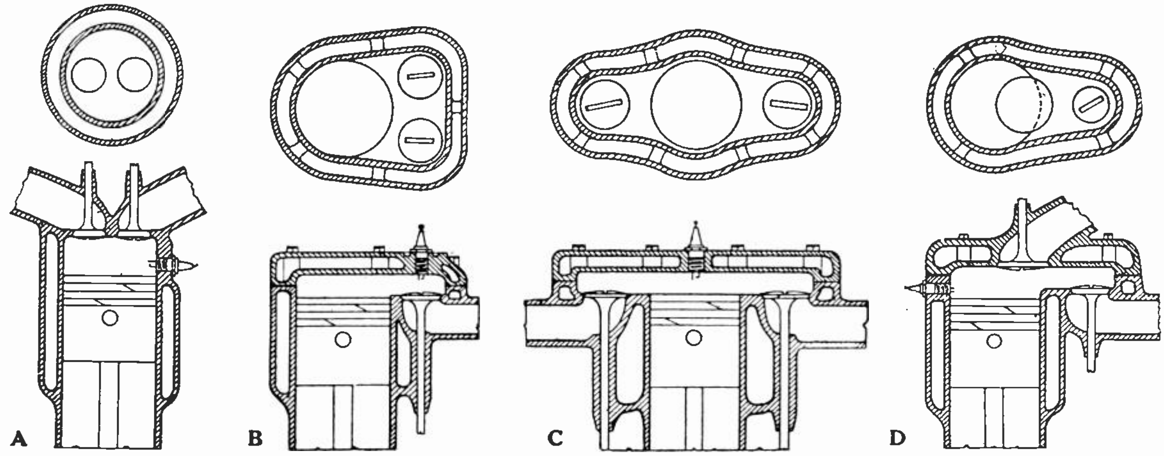

Fig. 8. The above diagrams show the location and arrangement of valves with respect to the cylinder in various types of automobile engines

the cylinder head above the piston. An engine of this type is known as the "overhead valve" type.

"B" shows a cylinder of a side valve engine in which all of the valves are placed on one side of the engine. Engines of this type are commonly called "L-head" engines because the combustion chamber and cylinder form a sort of inverted L shape.

At "C" is shown one cylinder of a "T-head" engine in which the exhaust valves are located on one side of the engine and the intake valves on the other.

At "D" is shown the valve arrangement for what is called an "F-head" engine, which uses a combination of the first two types, the intake valves being located in the head and the exhaust valves on the side.

Fig. 9 shows an end view of an engine with overhead valves. The cam shaft shown at the left of the connecting rod operates a long push rod which in turn operates a rocker arm at the top of the engine. The right-hand end of this rocker arm opens the valve by pushing it downward into the combustion chamber.

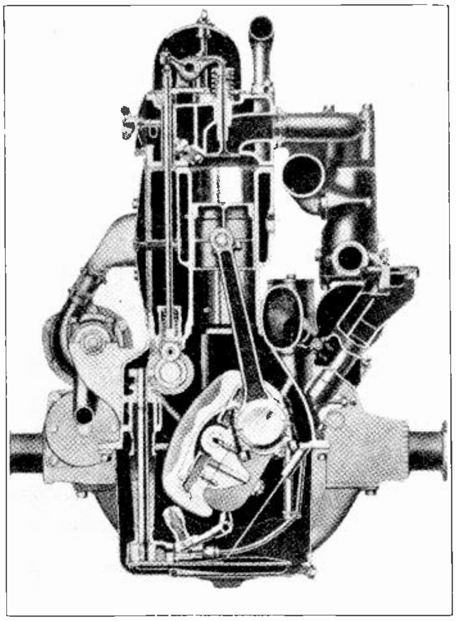

Fig. 9. End and sectional view of a Buick engine showing the overhead valve construction, the method of operating valves by means of long push rods, and overhead rocker arms.

Probably 80% of modern automotive engines are of the L-head type and most of the remainder use the overhead type. One decided advantage of both the L-head and overhead valve types of engines is that all valves are arranged in one line, and therefore only one cam shaft is required to operate all of the valves. This results in a very definite arrangement of the valves from the front to the rear of the engine.

In Fig. 10 you will note that the first and last valves are exhaust valves and the intermediate ones are arranged in alternate pairs of intakes and exhausts. While this sketch shows the valves for a 4-cylinder engine the same arrangement is used regardless of the number of cylinders as long as they are all in one line. This valve arrangement provides a convenient means for setting the engine on U.D.C. when timing the ignition.

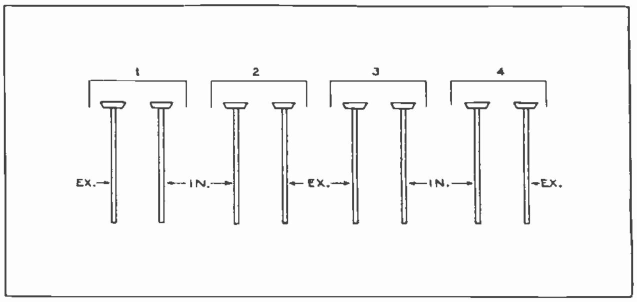

Fig. 10. This simple sketch shows the order or arrangement of exhaust and intake valves which is used on practically all automobile engines. Knowing this arrangement will be a great help in locating certain valves when timing an engine.

In order to obtain even torque and better balance in automobile engines the crank shafts are generally made so that the pistons move up and down in pairs, the first and last piston always moving up and down together. The two pistons of any pair, however, are always on different parts of the cycle.

For example, when the last piston is moving up on exhaust the first is coming up on compression, and when the last piston arrives at U.D.C. position the last valve on the engine will close, as it is an exhaust valve. Therefore, when the last valve on the engine closes, No. 1 piston is on upper dead center on the compression stroke and the engine is set on the timing position or ready for the spark to occur in No. 1 cylinder. This method is particularly applicable to overhead valve engines and is a very good rule to remember.

No. 1. Cylinder on an automobile engine is always the one next to the radiator or on the cranking end, the remainder of the cylinders are numbered in order from here back to the flywheel end.

7. MULTIPLE CYLINDER ENGINES

A single-cylinder, four-stroke-cycle engine receives only one power impulse for every two revolutions of the crank shaft, as four strokes are required to complete the cycle and only one of these strokes is a power stroke. In single-cylinder engines, therefore, a rather heavy impulse is required on the power stroke in order to build up sufficient momentum to keep the engine turning through the three idle strokes which follow.

Due to the severe strain imposed on the engines by this heavy power impulse such engines had to be very strongly constructed, and as a result both the stationary and moving parts were excessively heavy. In addition, they required a very heavy flywheel, capable of storing sufficient energy on the power stroke to keep the engine running at approximately constant speed through the rest of the cycle.

Such engines cannot run at high speeds without severe vibration, and this disadvantage along with the excessive weight has led to the production of multiple-cylinder engines which provide more frequent power impulses, run more smoothly, and have greater flexibility and lighter weight for a given power output.

The greater the number of cylinders the more frequently the power impulses occur and the more even is the flow of power applied to the crank shaft. For a given power output the size and weight of the moving parts of the engine become less as the number of cylinders increases, and this makes possible higher engine speeds and higher efficiencies.

On any engine with more than four cylinders there is no point in the rotation where the engine is not receiving power from the expanding gases on one or another of the power strokes.

For the above reasons six and eight-cylinder engines are the most popular for automobiles, although a number of "fours" are still being built. Twelve and sixteen-cylinder engines are also used and deliver extremely smooth power to drive the car.

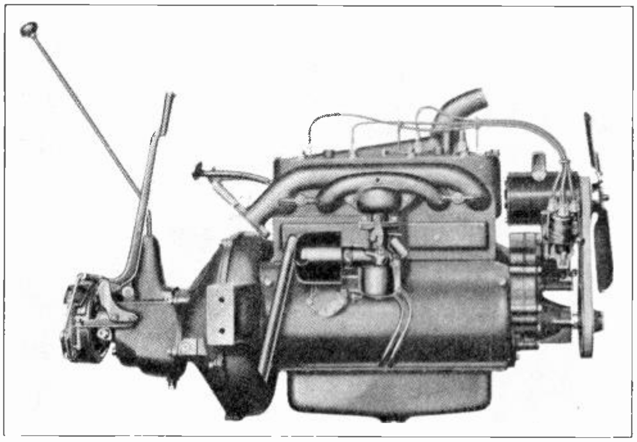

Fig. 11. Side view of a four-cylinder automobile engine used by the Chrysler Plymouth automobile. Note the position of the carburetor, intake and exhaust manifolds and spark plugs.

8. FOUR-CYLINDER ENGINES. FIRING ORDER

Fig. 11 shows a side view of a four-cylinder engine.

Any four-stroke-cycle engine fires all cylinders in two revolutions of the crank shaft, or 720° of crank rotation. Therefore, the angle between the power impulses of a four-cylinder engine of this type will be 720 ÷ 4, or 180°.

The crank shaft for the four-cylinder engine is designed so that the pistons travel up and down in pairs, 1 and 4 traveling up and down together and 2 and 3 traveling together. In this manner, when 1 and 4 are at upper dead center 2 and 3 are at lower dead center, as the crank throws to which they are attached are 180° apart. See Fig. 12, which shows a sketch of the pistons and crank shaft of an ordinary four-cylinder engine.

Fig. 12-A is a sectional view of a four-cylinder engine, showing the crank shaft and other important parts.

When piston No. 1 is moved to L.D.C. on its power stroke the crank shaft has turned 180° from the point of ignition, and at this time another power stroke should commence in one of the other cylinders. At this time pistons 2 and 3 will be at U.D.C., and the one that is fired will depend on the design of the cam shaft, as the operation of the valves will cause one of these pistons to be up on compression stroke and the other on exhaust stroke. If 3 fires after 1 it must be followed by 4, and then by 2, so the **firing order** of the engine in this case will be 1-3-4-2.

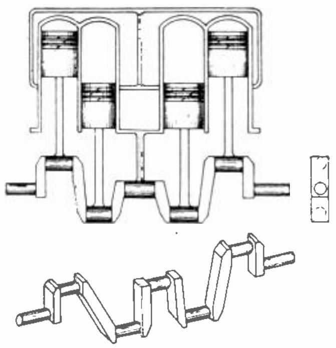

Fig. 12. Sketch showing the design of the crank shaft and arrangement of pistons in a four-cylinder engine.

If the cam shaft is arranged so that No. 2 cylinder fires after 1, then the firing order will be 1-2-4-3. These are the only two firing orders used on four-cylinder automobile engines. The last firing order mentioned is used on both the Ford and four-cylinder Chevrolet engines.

It is very important to know the firing order of various engines on which one may be working, in

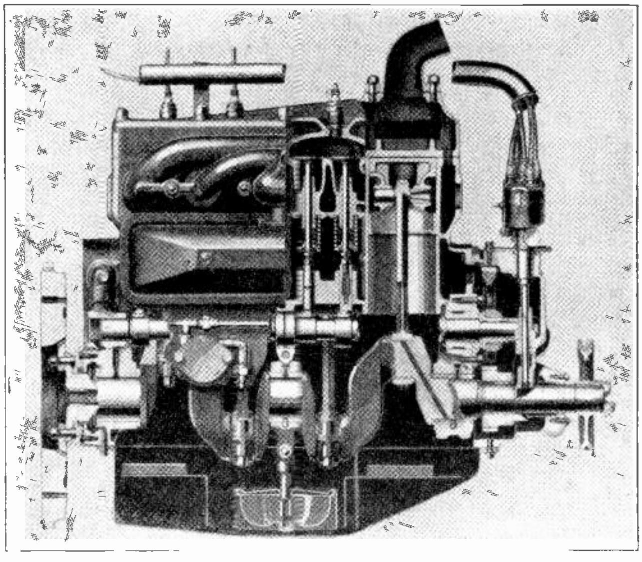

Fig. 12-A. Side sectional view of Chrysler Plymouth four-cylinder engine showing the shape of the crank shaft and arrangement of pistons, valves, etc.

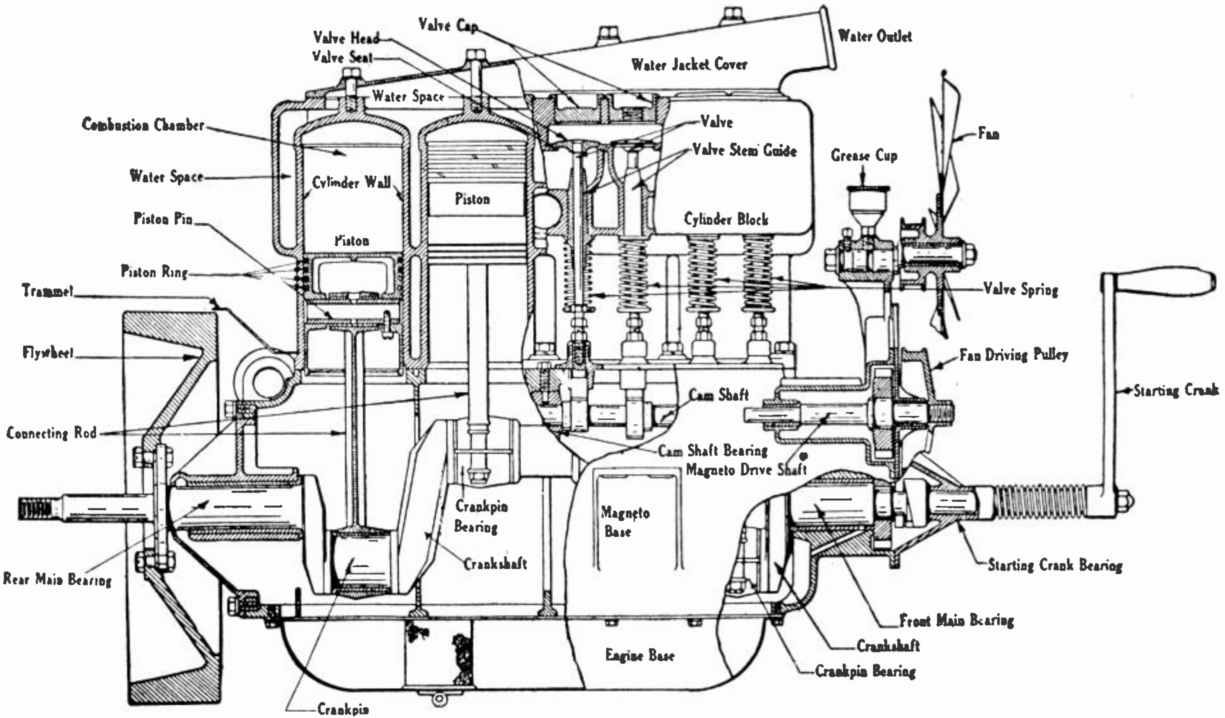

Fig. 13. This diagram shows a sectional view and a number of the important parts of a heavy-duty four-cylinder engine. Note the names by which each of these parts are called. Also note the water jacket around the cylinders for cooling them and carrying away the heat developed by combustion.

order to be able to properly connect the ignition wires from the distributor to the spark plugs,

Firing orders of various engines can be obtained from the manufacturers or dealers, and garages and ignition service stations generally carry a book which gives the firing orders for all of the common types of engines. The method for determining the firing orders by checking directly on the engine will be explained a little later.

Fig. 13 shows a sectional view of a heavy-duty four-cylinder engine and gives the names of many of the important parts. Examine this figure carefully.

9. SIX-CYLINDER ENGINES. FIRING ORDER

Six-cylinder engines are generally preferred to four-cylinder types as the power strokes overlap each other and occur more frequently, or at smaller angles in the revolutions of the crank shaft. As six-cylinder engines of the four-stroke-cycle type fire all cylinders in only two revolutions of a crank, or in 720°, their power strokes will be 720 ÷ 6, or 120° apart.

The cranks are arranged at this angle so that they project out at three different points around the crank shaft. This is shown in the small sketch at the right in Fig. 14 which shows the arrangement of the crank throws and pistons in a six-cylinder engine.

By referring to the lower view of the crank shaft in this figure you will note that the cranks are also arranged in pairs, so that pistons 1 and 6 will move up and down together, 2 and 5 together, and 3 and 4 together. Remember, however, that no two pistons which travel up and down together are on the same part of the cycle at the same time, as when one is going up on its compression stroke the other piston is going up on its exhaust stroke.

By referring back to Fig. 3 an excellent view of a six-cylinder crank shaft can be seen. This view shows quite clearly the position of the cranks with respect to each other, and also shows the main bearings of the crank shaft.

In Fig. 14 four of the pistons seem to be at about the same position, part way between the lower and upper ends of the stroke; but by noting the position of the crank throws in the lower view of the crank shaft you will find that if pistons 2 and 5 are traveling downward at this point, pistons 3 and 4 will be traveling upward.

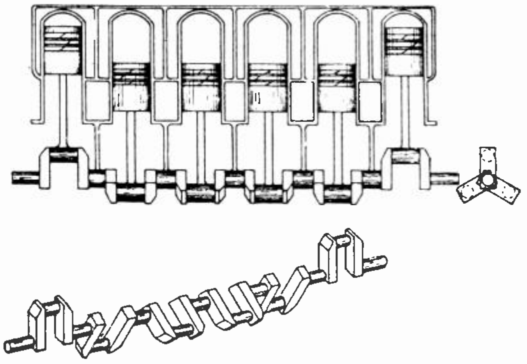

Fig. 14. Diagram showing the design of the crank shaft and the arrangement of pistons for a six-cylinder engine. Note that the cranks are arranged in pairs 120° apart around the shaft.

Because of their more frequently occurring power impulses six-cylinder engines deliver much smoother power than four-cylinder types. There are several firing orders possible with six-cylinder engines having crank shaft arrangements such as shown in Fig. 14, but the only two firing orders which are used are as follows: 1-5-3-6-2-4, or 1-4-2-6-3-5; these having been adopted as more or less standard by various engine manufacturers.

Firing in the proper order is very important in balancing the internal forces in the engine, but has no effect on the interval between power impulses, as this is determined by the design of the crank shaft.

By this time you can, no doubt, readily see the great importance of the firing order in wiring the ignition system of an engine; because if the distributor wires were connected wrongly to the spark plugs the sparks would occur at the wrong time in the cylinders, and the engine would misfire, operate irregularly, and deliver very low power; or possibly not even start.

For example, if the spark occured in a cylinder when the piston came up on exhaust stroke instead of compression stroke there would be no fuel mixture present at the time of the spark and therefore no explosion.

Fig. 15 shows a side-view of a modern six-cylinder engine with sections of the casing cut away to show some of the important parts. No. 1 cylinder is completely open, showing a sectional view of the piston, wrist pin, connecting rod, etc. No. 2 cylinder is arranged to show a sectional view of the exhaust and intake valves, valve guides, valve springs, push rods, and a section of the cam shaft.

On the left end of the engine are shown the flywheel, clutch, and transmission. The distributor, high-tension ignition wires, and spark plugs are shown on top of the engine.

10. EIGHT-CYLINDER ENGINES. FIRING ORDER

The decided advantages of the engines with a greater number of cylinders, both in smooth power performance and in reduced manufacturing cost per horsepower, have resulted in a definite trend toward the construction of engines of this type, and quite a number of the latest automobiles are equipped with "straight-eight" engines. This term "straight-eight" refers to engines having eight cylinders in line. There are other very popular eight-cylinder engines which are of the V-type and which will be discussed later.

The straight-eight engine produces a remarkably smooth torque, as its power impulses occur every 90°, or 720 ÷ 8. Fig 16 shows an eight-cylinder engine of this type. Practically all of the recently built straight-eight engines use the firing order: 1-6-2-5-8-3-7-4.

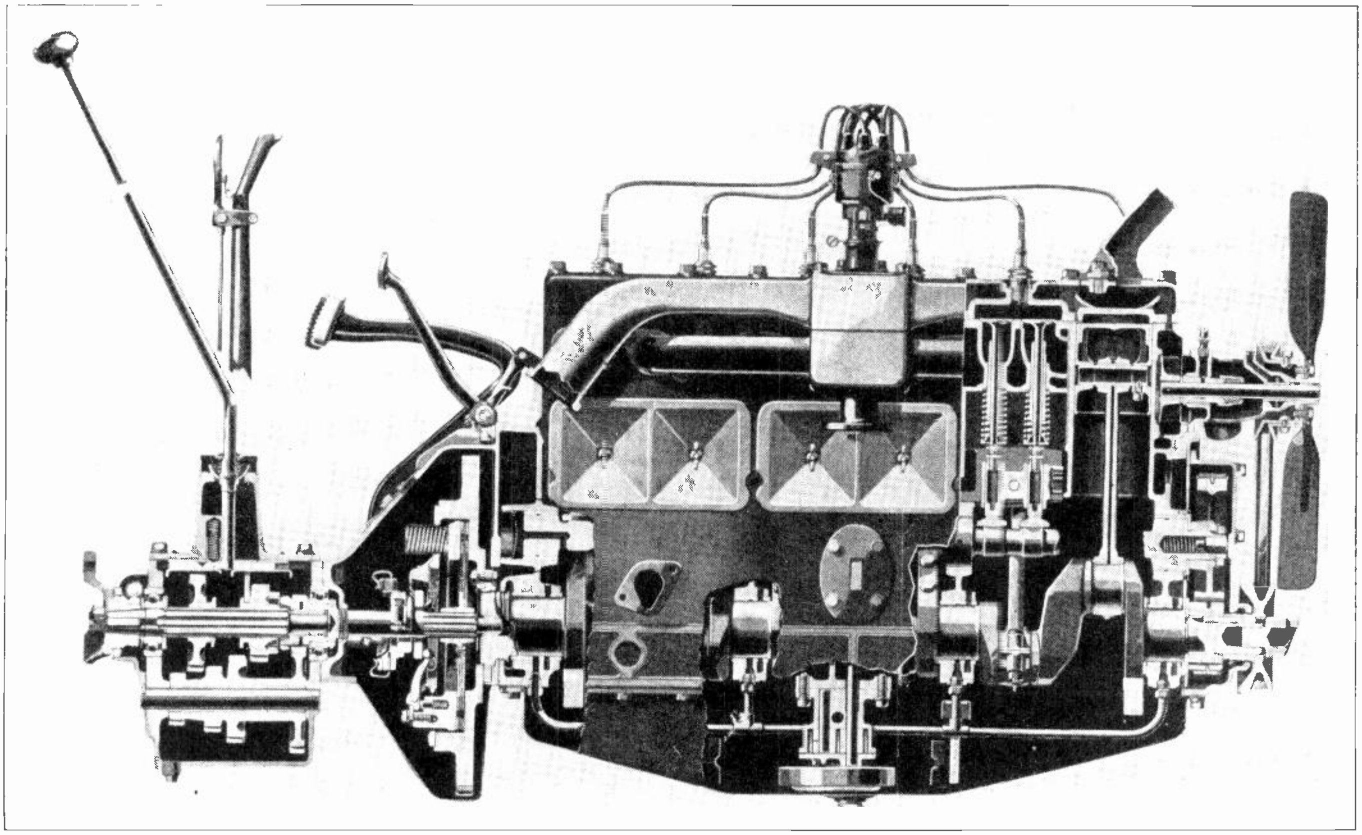

Fig. 15. An excellent side sectional view of a six-cylinder Oldsmobile engine cut away to show the crank shaft, pistons, connecting rods, valves, push rods, cam shaft, flywheel, clutch and transmission. Also note the position of the distributor and spark plugs on top of the engine. Courtesy Oldsmobile Mfg. Co.

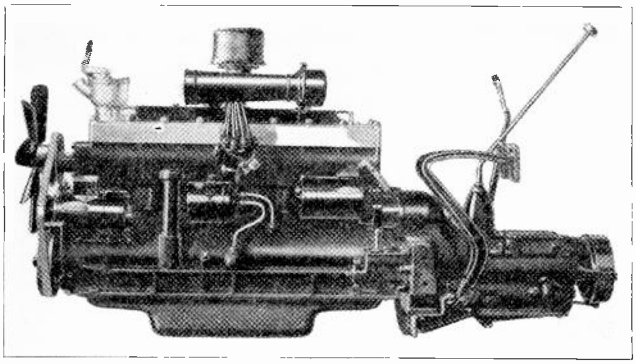

Fig. 16. Modern "line eight" automobile engine with eight cylinders in line. Engines of this type are very extensively used on modern cars and deliver extremely smooth power. Courtesy Chrysler Motors Corp.

Straight-eight engines are used by Chrysler, Marmon, Packard, Buick, Studebaker, and other manufacturers of popular cars.

V-type eight-cylinder engines have their cylinders arranged in two rows or "banks" of four each, as shown in Fig. 17. Engines of this type are used in Lincoln, Cadillac-LaSalle, and Oldsmobile-Viking cars.

The firing order of a V-type engine alternates consecutively, firing first one cylinder on the right bank and then one on the left bank, and so on down the bank, following this arrangement as closely as the design of the crank shaft will permit.

In the calier types of V-eight's crank shafts similar to those used in four-cylinder engines were employed, having two pistons one from each bank connected to each crank throw, as shown in Fig. 18.

The firing order for this type of engine is either 1R- 4L- 2R- 3L- 4R- 1L- 3R- 2L; or 1R- 4L- 3R- 2L- 4R- 1L- 2R- 3L. The letters "L" and "R" denote cylinders on the left and right banks, as viewed from the drivers seat, and always keep in mind that **number one cylinder is the one nearest the radiator.**

Most of the more modern V-eight's use a crank shaft with the cranks arranged 90° apart instead of 180°, and thus obtain still better balance and smoother operation. Engines of this type are used by the Cadillac-LaSalle and Oldsmobile-Viking cars.

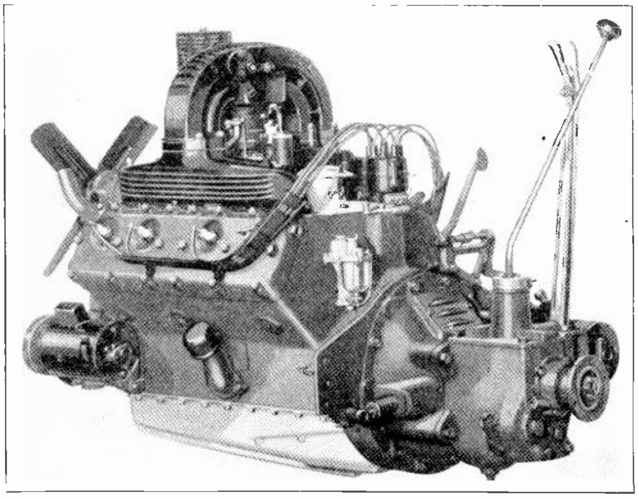

Fig. 17. V-type, eight-cylinder engine with cylinders arranged in two banks of four each. Carefully compare the construction of this engine with the "line eight" type shown in Fig. 16. Courtesy Oldsmobile Viking Mfg. Co.

They require a different firing order from the earlier type V-eight's. The firing order of the Cadillac-LaSalle engine is: 1 L- 4 R- 4 L- 2 L- 3 R- 3 L- 2 R- 1 R.

The firing order of the Oldsmobile Viking is: 1R- 1L- 4R- 2R- 2L- 3R- 3L- 4L.

The firing order of the Lincoln is: 1R- 4L- 2R- 3L- 4R- 1L- 3R- 2L.

Fig. 19 shows a photo of a crank shaft such as used in these later type V engines, and Fig. 20 shows an excellent sectional end-view or a modern V-eight engine. In the foreground can be clearly seen the crank shaft with its counter-balancing weights and two connecting rods attached to the one crank. Note the position of each of the pistons attached to this crank and observe that one of the pistons is at the extreme outer end of its stroke, or U.D.C., while the other piston on the left is approximately midway on its downward stroke. Also note the position of the spark plugs and valves in the combustion chambers.

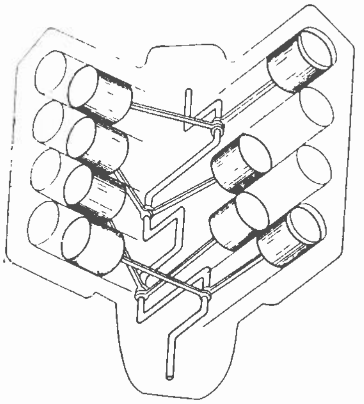

Fig. 18. Diagram showing the type of crank shaft and arrangement of pistons used with V-type, eight-cylinder engines.

The end of the cam shaft can be seen located between the cylinders. The cams of this shaft operate short rocker arms, which in turn press against the valve stems to operate the valves in the proper order. The carburetor, air filter, and intake and exhaust manifolds are shown above the engine in this view.

One of the later types of multiple-cylinder engines is the Cadillac V-16, which is in reality two straight-eight's mounted at an angle of 45° to each other. This engine delivers remarkably smooth power and a tremendous amount of horsepower for its weight, and is a very good example of the weight reduction possible with an increase in the number of cylinders. The weight of this engine is only 25% greater than that of the Cadillac Eight, but its horsepower is double.

The firing order of the V-16 is: 1 L- 4 R- 5 L- 7 R- 2 L- 3 R- 6 L- 1 R- 8 L- 5 R- 4 L- 2 R- 7 L- 6 R- 3 L- 8 R.

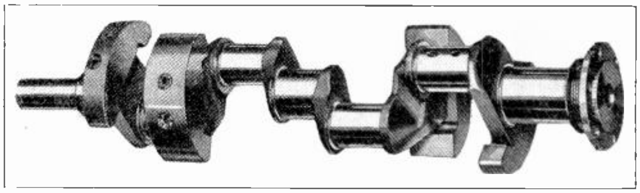

Fig. 19. Photograph of crank shaft used with V-type, eight-cylinder engines. Note that there are only four cranks, each of which have two connecting rods from pistons in opposite banks connected to them.

11. DETERMINING FIRING ORDERS BY TEST

In case the firing order of any engine is not known it may be quickly determined by any one of several methods. The simplest and most popular of these is the **compression method.**

We know that each piston must move up on its compression stroke just before its cylinder is fired, and the order in which these compression strokes occur in the different cylinders must be the same as the firing order. Keeping this fact in mind, the firing order may be quickly and accurately determined in the following manner.

Remove all spark plugs and seal the plug hole in cylinder No. 1 with a piece of paper or waste. Then slowly crank the engine until the paper blows out. Stop cranking at this point and seal the remaining spark plug holes, and then slowly turn the crank, noting the order in which the remaining wads are blown from the cylinders. This will indicate the firing order.

As each successive wad is blown from the cylinder a chalk mark may be put near that plug opening denoting the number of the wad blown—as 1, 2, 3, 4, etc. When all cylinders are marked the firing order can be read from cylinder 1 to the last cylinder.

Keep in mind that the firing order of an engine cannot be changed, as it is determined by the design of the crank shaft and cam shaft. These would have to be changed before the firing order could be altered.

Another method of determining the firing order —and one that is sometimes more convenient than that just given, particularly when the engine is of the overhead valve type—makes use of the fact that the valves open and close in the same order as the firing order.

When the intake valve closes on No. 1 cylinder the piston is rising on the compression stroke. Since the compression stroke takes place in each of the different cylinders in the same order as the firing order, the order in which the intake valves close must be the firing order.

To determine the firing order by this method, first locate the intake valve of each cylinder and then rotate the engine slowly until the intake valve on No. 1 cylinder closes. The next intake valve to close will be located at the cylinder that follows No. 1 in the firing order, or the one which fires second.

Continue turning the crank slowly and note the order in which the remaining intake valves close. This will show the firing order.

The same procedure could be used with the exhaust valves if desired.

12. IGNITION SYSTEMS. PRINCIPLES

As previously explained, the purpose of the ignition system on an automobile engine is to provide a means of setting fire to or igniting the fuel charge in the combustion chamber each time the piston comes to U. D. C. on the compression stroke.

A number of different methods of igniting the gas charge in internal combustion engines have been tried, but electrical ignition has proved to be the most positive and reliable for the high engine speeds required in automotive service.

Many modern automobile engines rotate at speeds of about 4000 RPM and require from 200 to 300 sparks per second, depending upon the number of cylinders. Electrical ignition is the only type capable of giving sufficient instantaneous heat to ignite fuel charges at such speeds, and has the added advantage of being easily and accurately controlled.

The important parts of a common electrical ignition system are:

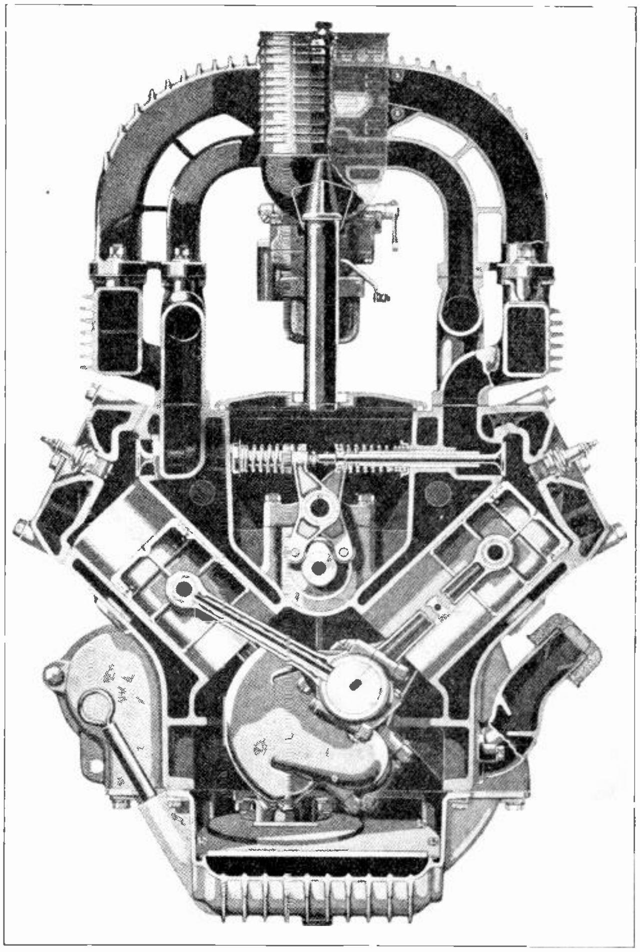

Fig. 20. An excellent end sectional view of a modern V-type, eight-cylinder engine. Note carefully the arrangement of the pistons, valves, cam shaft, rocker arms, spark plugs, carburetor, and intake and exhaust manifolds. Courtesy Oldsmobile Viking Mfg. Co.

1. **A battery** or **generator** for a source of current supply.
2. **A spark coil** or **magneto** to produce high-voltage sparks at certain regular intervals.
3. **Spark plugs** to introduce the sparks into the combustion chamber of the engine.
4. **A distributor** to direct the high-voltage current to the spark plugs in the correct order.
5. A means of varying the time of the spark with relation to the piston position.

Each of these devices will be explained in the following paragraphs.

13. STORAGE BATTERIES

Storage batteries are commonly used as the source of current for ignition and other uses on modern automobiles. The majority of these batteries are the three-cell, six-volt type, but some are of the twelve-volt type.

Fig. 21 shows a common type six-volt storage battery in a rubber case, with the connector straps and terminal posts showing on top of the battery.

Storage batteries provide a convenient small portable device for supplying electricity for ignition, lights, horn, starting motor, etc. These batteries are fully charged when installed in a new car, and are then kept charged by current supplied from a low-voltage generator which is driven directly from the engine as long as it is running. This prevents the battery running down or discharging and eliminates the necessity of removing it from the car for frequent recharging.

The combination of this battery and generator provide a dependable supply of low-voltage energy as long as the generator charging rate is properly maintained and the battery is not abused or used excessively when the engine is not running. Both storage batteries and generators for automobiles will be discussed more fully in later paragraphs.

Fig. 21. Common three-cell, six-volt storage battery of the type extensively used to supplv current to ignition and lighting systems on automobiles.

14. IGNITION COILS

Electrical ignition is accomplished by forcing a spark across a small air gap in the combustion chamber. The voltage required to break down the resistance of this air gap and form a spark will depend principally upon the length of the gap and the degree of compression. With a compression pressure of about 80 lbs. per square inch and a spark gap length of about .030 inch, the voltage required to produce the spark will range from 6000 to 10,000 volts. These values of compression and spark gap length represent common practice in modern automobile engines.

We can readily see that the six-volt energy supplied by the battery will not be of high enough potential to break down the gap and form a spark, and that this voltage will need to be increased or stepped up considerably for ignition purposes. To accomplish this we use a special type of direct current transformer called an **ignition coil.**

Fig. 22. High-tension ignition coil such as used for supplying high voltage impulses to the spark plugs on the ignition systems of automobiles. The heavily insulated bushing on the top of the coil is where the high voltage lead connects.

Fig. 22 shows a high-tension ignition coil such as used with many automobiles. In this figure the coil and core are shown enclosed within a waterproof case which is attached to a bracket for convenient mounting on the engine.

An ignition coil consists essentially of a soft iron core which is laminated or built up of a bundle of soft iron wires and on which are wound two separate windings called a primary and secondary. The

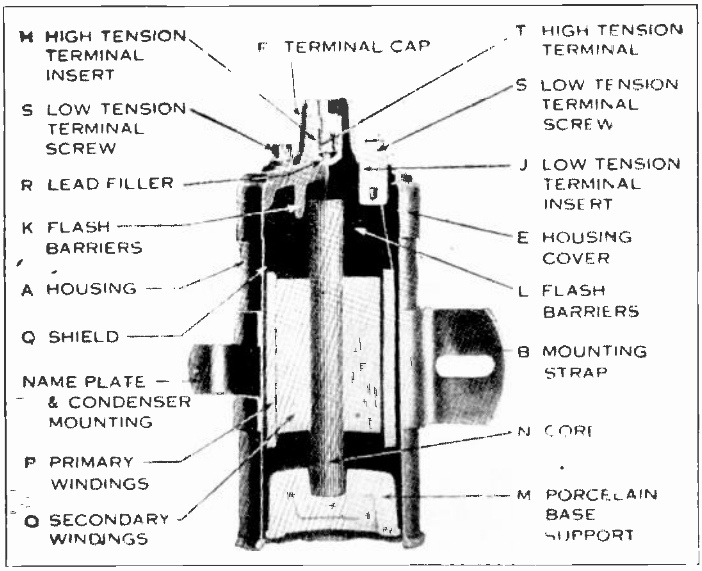

Fig. 23. Diagram showing a sectional view of an ignition coil and the location and names of each of the important parts.

primary winding generally consists of about 200 turns of No. 18 wire and is connected in series with the battery and a make and break contact or **interrupter.** The secondary winding generally consists of about 12,000 turns of No. 36 wire and is connected in series with the spark plug gap.

Fig. 23 is a sectional view of an ignition coil, showing the position of the core and coils within the case and also giving the names of the more important parts.

You already know that with a transformer of this type, when alternating current or pulsating current is passed through the primary winding consisting of a smaller number of turns, a much higher voltage will be induced in the secondary winding because of its greater number of turns. As the current supplied by the automobile battery or generator is D. C., it is necessary to provide some form of make and break device in the primary circuit of the ignition coil, in order to cause the variation of the current and magnetic flux necessary for the induction of the high voltage in the secondary.

Fig. 24 is a diagram showing some of the essential parts and the operating principles of a modern battery ignition system. When the switch, SW., and the contacts, A, of the interrupter are closed, current will flow from the positive terminal of the battery, through the primary winding of the ignition coil, through the interrupter contacts; then, through the grounded connections and metal frame of the car, back to the battery.

This flow of current sets up a strong magnetic field around the iron core of the ignition coil. As the engine operates, the cam (C) is caused to rotate and each of its projections bump the movable spring contact, causing the circuit to be momentarily opened at "A".

Each time the circuit is thus opened the magnetic flux around the core in the ignition coil collapses and induces a momentary high voltage in the secondary winding. You will note that one end of this secondary coil is connected to the primary terminal and has a circuit back through the battery to ground, G. The other end of the high-tension winding goes directly to the spark plug, so that the high voltage will flash across the spark plug points in the form of a hot spark; then from the shell of the plug to the ground connection, G2, and back through the metal frame of the engine to the grounded battery terminal, and on to the start of the secondary coil. This completes the high-tension circuit for one plug.

The voltage induced in the secondary winding of the coil not only depends upon the number of turns in the secondary and the amount of flux set up by the primary, but also depends upon the speed of flux collapse around the coil and core when the breaker points open the circuit.

When the primary circuit is open the current flow does not stop instantly because of the effect of self-induction in the windings. The collapsing flux induces a rather high voltage in the turns of the primary winding, and tends to maintain a current flow in the form of an arc across contacts A for a small fraction of a second after these contacts are open.

This tends to slow up the flux collapse and thereby reduce the voltage induced in the secondary. The arc that is caused at the breaker points by this self-induction would also tend to burn and damage the surface of these points if something were not done to quickly extinguish the arc.

15. IGNITION CONDENSERS

To eliminate the arc at the breaker points and also to counteract the tendency of current to flow after the primary circuit is broken, a device known as an **ignition condenser** is used.

In Fig. 24 this condenser is shown at "C", and is connected directly across or in a parallel with the contact points at "A".

These condensers consist of a number of layers or small sheets of tinfoil separated by sheets of insulating material, usually paraffin paper or mica. Alternate tinfoil sheets are connected together forming

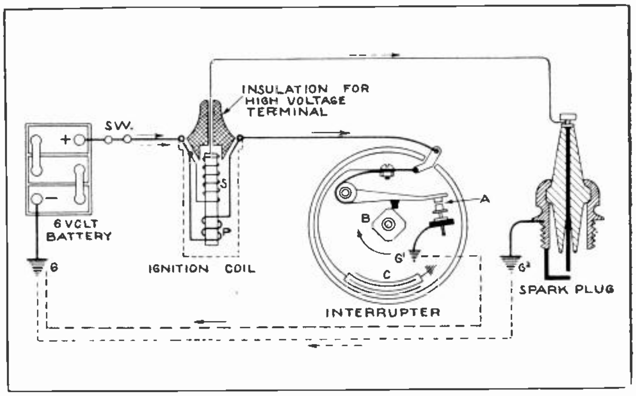

Fig. 24. This simple sketch shows both the primary and secondary circuits of a battery type ignition system. Trace the primary current through the heavy wire and ground connections, and the secondary current through the light wire, spark plug, and ground connections.

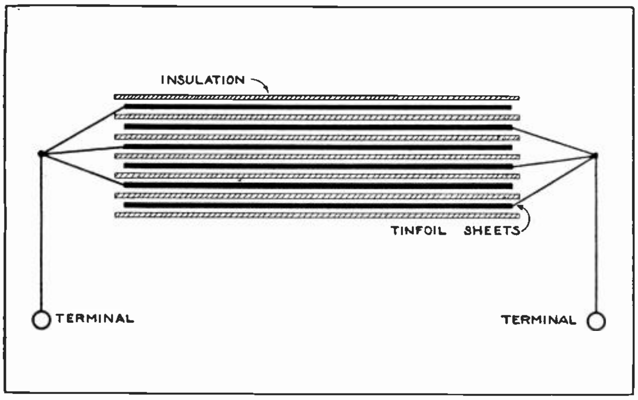

Fig. 25. Diagram showing the construction of a simple condenser with groups of conducting sheets separated by sheets of insulation. In ignition systems it is very important that this insulation be in good condition and have no shorts or grounds.

one terminal of the condenser, and the remaining sheets form the other terminal, as shown in Fig. 25.

With the condenser connected across the points as shown in Fig. 24, when the points open the primary circuit the self-induced voltage which tends to keep current flowing through the primary is absorbed by the condenser. This induced voltage, which at times reaches an instantaneous value of 200 volts, charges the condenser instead of forming an arc at the breaker points.

The charged condenser then applies a back voltage to the primary coil and circuit, thus effecting an almost immediate stoppage of current flow and greatly speeding up the demagnetization of the iron core.

This increase in the speed of flux collapse greatly increases the voltage induced in the secondary and applied to form the spark at the plug points. In fact, a coil with a good condenser of the correct capacity may often produce a spark ten times as great as a coil without any condenser. If the condenser is defective the ignition system will not operate.

In addition to this great improvement in the ignition itself, the condenser greatly increases the life of the breaker contacts and enables them to operate for long periods without attention, by almost entirely eliminating the arc when these points open the primary circuit.

16. EFFECTS OF SELF-INDUCTION

A fact that has a very important effect upon the operation of ignition coils is that it requires a small fraction of a second for the current in the primary coil to build up to full value after the breaker points are closed. This is also due to the counter-voltage of self-induction. The time required for the current to build up to maximum value depends upon the design of the coil and the self-induction of the primary circuit.

This becomes a very important factor, particularly with high-speed engines with a large number of cylinders, because, as already mentioned, it may be necessary for the breaker points to open and close several hundred times per second. If there is not sufficient time between the closing and opening of the breaker points for the primary current to build up to full value, then when the points are opened there is less flux to collapse across the secondary turns, and there will be less induced voltage in the secondary and at the spark plug points.

An ordinary ignition coil may require approximately .012 of a second for its primary current to build up to full value after the points are closed. By changing the design of the coil and providing a magnetic circuit of lower reluctance and a primary winding with less turns, it is possible to reduce the amount of self-induction in the winding and thereby speed up the action of the coil.

Referring to Fig. 26 and carefully comparing the curves for the fast and slow ignition coils, you will note that on the coil design for fast operation the current can build up to its full value of approximately 6 amperes in a time of .006 second; while the slow coil requires approximately .012 second, or twice as much time, to build up to its maximum current.

From this we can see that the design or speed of operation of ignition coils is very important and must be considered when changing or replacing coils, particularly on high-speed engines.

A slow speed coil would require the breaker contacts to be closed for nearly .012 second in order to build up full current and obtain a good spark on each break, and with high-speed engines the period during which the breaker points remain closed may be considerably less than .006 second.

This matter of speed or time lag in the operation of ignition coils also explains why the sparks supplied by the battery ignition system become weaker as the engine approaches higher speeds; because, as the speed increases, the period of time during which the breaker contacts remain closed becomes less.

17. IGNITION COIL RESISTANCE

Decreasing the number of turns in the primary winding of an ignition coil to speed up the action of the coil has the undesirable effect of reducing the primary resistance to a point that will cause it to take an excessive current at low engine speeds when the breaker points are allowed to remain closed for

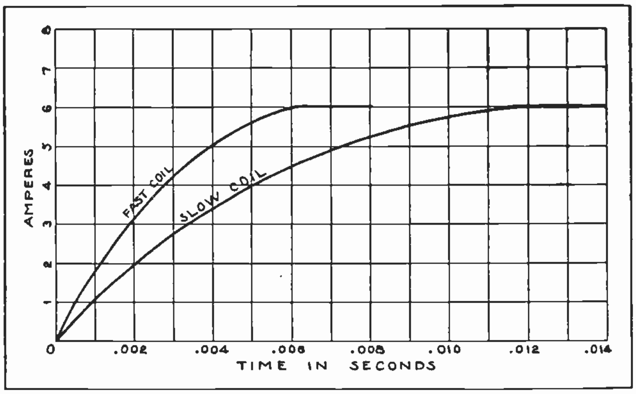

Fig. 26. The above curves show the difference in time required for different types of coils to build up their full primary current after the breaker points close.

longer periods. This tends to cause the coil to overheat.

To prevent this a current-limiting resistance is connected in series with the primary winding of the ignition coil. This resistance is made of material of such a nature that its resistance increases with its current and temperature.

When the engine is operating at high speed and the breaker points are closed only for very short periods the current flow through the primary and the resistance is less. This allows the resistance unit to remain cool and keeps its resistance low, so that it does not interfere much with the flow of current through the coil primary.

As the engine speed is reduced and the breaker points are closed for longer periods, allowing the coil to draw a heavier current, this increased current raises the temperature of the resistance unit, causing its resistance in ohms to increase and thus limiting the primary current to the proper value to prevent overheating of the winding and coil.

This small resistance unit also protects the coil from burning out in case the ignition switch is left turned on when the engine is stopped, and also during the periods of high voltage which may occur due to faults in the generator.

Excess current from either of these causes will heat up the resistance element to a point where its resistance becomes very high, thus limiting the current flow and protecting the coil.

In case the switch is left on too long or the generator fault is not removed, the resistance unit may be burned out and thus open the circuit; but this unit is much easier and cheaper to replace than a burned out coil would be.

These primary resistance units are generally wound on small porcelain or asbestos insulators and are mounted right on the ignition coil.

18. VIBRATING-TYPE IGNITION COIL

Some of the earlier types of ignition systems, a few of which are still in use on older cars, use the vibrator-type spark coil. On these coils the circuit is made and broken by a magnetically operated armature and a set of contacts attached directly to the end of the coil, instead of being broken by the breaker points in the distributor as with modern ignition systems.

Fig. 27 shows a coil of this type mounted in a wooden box equipped with spring contacts and screw terminals for completing the circuits through the ignition wires. When this coil is connected in the ignition circuit the current enters the terminal marked "connect to switch" and flows around the primary winding, through the vibrator contacts, to the terminal marked "connect to commutator".

From this point it flows through the timer or "commutator", and back to the battery. When the current flows through the coil the iron core becomes magnetized and pulls down the steel spring or armature to which the lower contact is attached, thus breaking the primary circuit and inducing the high voltage in the secondary.

Breaking the circuit by demagnetizing the core allows the spring to move up and again close the contacts, thus repeating the operation very rapidly as long as the primary circuit is completed by the timer.

These contacts when properly adjusted vibrate with a speed of 200 breaks per second or more. To prevent the contacts from opening before the coil is fully magnetized, the upper contact is also mounted on a spring and tends to follow the lower contact down a short distance when it is attracted to the core.

This action continues until the upper spring strikes a stop on the under side of the adjusting bar; and at this point a quick, snappy break is effected.

The vibrator can be adjusted by turning the nut at the end of the adjustment bar, thus varying the distance between the spring and the iron core. Coils of this type are used extensively on model T Fords, but are now considered obsolete.

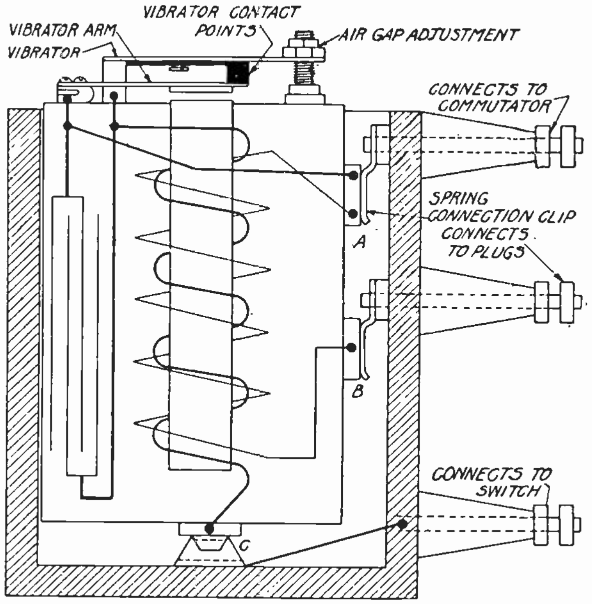

Fig. 27. Diagram of a vibrating type spark coil such as used on older model Fords and single-cylinder gasoline engines. Note the location of the condenser and trace out both primary and secondary circuits carefully.

Fig. 28 shows a wiring diagram of the ignition equipment for the old model T Ford. You will note that these systems used four seperate spark coils, one for each cylinder, and that the current from the battery was supplied to the primary of each spark coil at the proper time by means of the timer, or "commutator".

By tracing out this diagram you will find that current flows from the positive terminal of the battery to the switch which is used for connecting the ignition system to either the battery or the magneto after the engine is running. From the switch the current is supplied to a common bus or battery connection which feeds to all primary windings of the ignition coils.

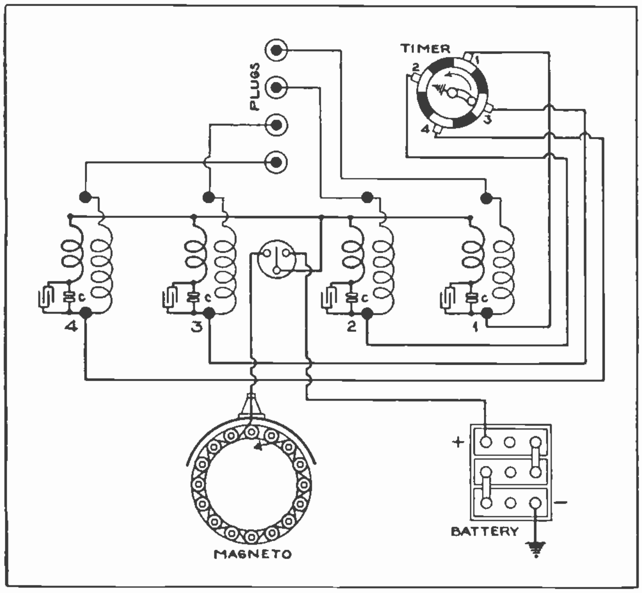

Fig. 28. Wiring diagram of the ignition systems used on the Model T or older type Fords.

Tracing the circuit of coil 3, the current would flow through the primary, then through the vibrator contacts, C, and out along the wire to terminal 3 on the timer; then through the rotor or movable arm of the timer to ground. From the ground connection it returns to the grounded negative of the battery, thus completing the circuit for this coil.

As the timer arm rotates counter-clockwise, as shown by the arrow, it closes the circuits to the primaries of the various coils in the order 1, 2, 4, 3. As each coil is excited in turn it delivers a spark from its secondary directly to the spark plug to which it is connected.

From this we find that systems of this type use four ignition coils instead of one coil as used by modern systems. The vibrating contacts on these coils also have a tendency to wear out or become burned and blackened, so that they require more or less frequent attention.

Note that the timer, which at the proper instant supplies the current to the various coils in order to create sparks at the right time in the different cells, is located in the primary circuit to the coils.

Modern ignition systems use a distributor in the secondary circuit and this will be explained in later paragraphs.

19. SPARK PLUGS

In order to introduce the ignition sparks inside the cylinders or combustion chambers, some highly insulated heat-resisting device is needed to carry the high voltage through the metal cylinder-head to the spark point located inside. For this purpose **spark plugs** are used.

Spark plugs are made in a number of different types, but in general they consist of a threaded metal shell which screws into the opening in the cylinder-head and which contains the electrodes or spark gap terminals, and a heavy porcelain or mica insulator which has the high-voltage terminal run through its center. The outer end of this insulated high-voltage terminal is equipped with a nut or clip for attaching the high-tension ignition wire.

Fig. 29 shows several different styles of spark plugs, and Fig. 30 shows sectional views of several plugs with each of the various parts marked and named. Examine this figure very carefully until you are sure you are thoroughly familiar with the construction of these devices.

Because of the very severe conditions under which spark plugs operate they must be carefully designed both as to materials and shape, and it is also very important to use the proper plugs when replacing old ones in an engine. The porcelain insulator for the center electrode must be a good insulator capable of withstanding at least 8000 volts or more, and should maintain its insulating qualities at very high temperatures. Under certain conditions this insulator may be subjected to temperatures of over 3000° F.

If this insulator cracks or breaks down in any way the high voltage will leak from the center electrode directly to the shell of the plug and be grounded to the engine without passing across the spark terminals or electrodes inside the cylinder. Porcelain is used almost entirely for insulation in spark plugs made by leading manufacturers.

The metal used for the electrodes themselves should have a rate of expansion approximately equal to that of the insulation, so that it will not crack the insulator with changes of temperature and will not loosen and allow leakage of the compression or expanding fuel gases. This metal should also be of such a nature that it will not be rapidly burned away

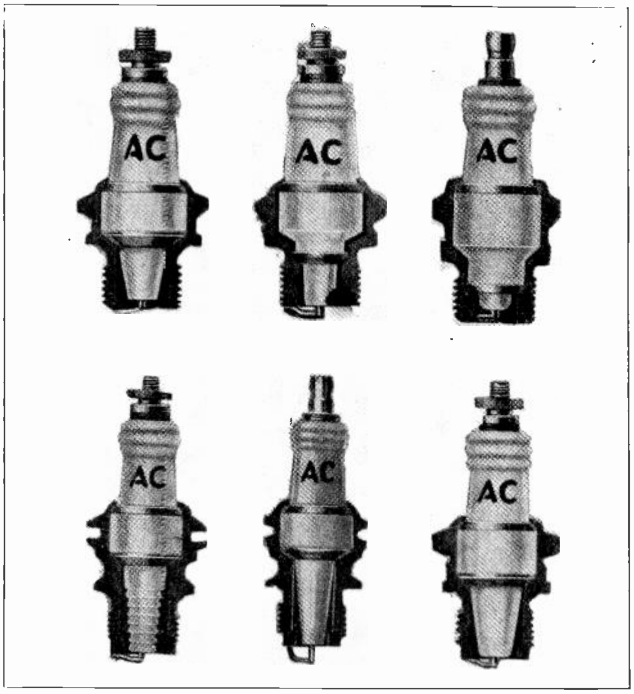

Fig. 29. Above are sectional views of several types of spark plugs showing their construction and the arrangement of the metal and porcelain parts, as well as the electrodes or points.

by repeated sparks, and it should not distort or change the length of the spark gap appreciably with various changes in temperature. The metal generally used for these electrodes is a nickle alloy.

The spark plug shells are made of steel and they are threaded on their lower ends to fit tightly into the threaded openings in the cylinder head and also to allow the plugs to be conveniently removed for cleaning, adjustment, or replacement.

If the plug points become badly fouled with carbon, it may tend to short circuit them and reduce the heat of the spark. In such cases the plugs should be removed and scraped clean. If the points become bent or badly burned away this may interfere with the efficiency of the spark and ignition of the fuel mixture, and such points should be adjusted or the plug replaced with a new one.

The top or outer end of the porcelain insulator should be kept free from dirt and moisture; otherwise the high-voltage energy may leak from the connection terminal down over the surface of the insulator to the metal plug shell, instead of flashing across the points inside the cylinder as it should.

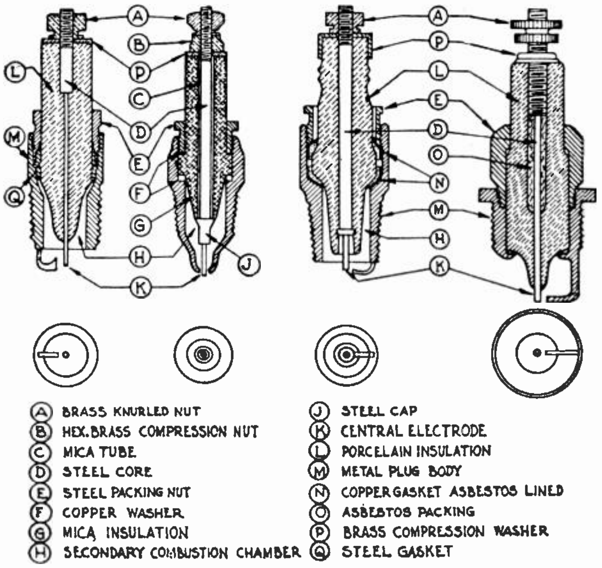

Fig. 30. This diagram also shows sectional views of several different spark plugs and gives the names of the various parts.

20. SELECTION OF PROPER TYPE PLUGS

There are two different sizes of spark plugs used in automobile engines and these are classified according to the type of threads used on the plug shell, and according to the diameter of the threaded portion of the shell.

The S.A.E. plug, so called because it has been declared standard by the Society of Automotive Engineers, has a diameter of 7/8 of an inch at the threaded portion and is still used by the majority of automobile manufacturers. The other type of plug is known as the "metric" plug, because it uses metric threads and has a diameter across the threads of 18 millimeters (approximately 11/16 of an inch).

Due to the definite tendency toward higher compressions and higher operating temperatures in modern engines, the metric plug is coming into favor with engine manufacturers. Its smaller diameter results in less distance between the plug points and the water-cooled metal of the engine, and this means that the heat from the plug points is dissipated more quickly, thus enabling the plug to run cooler at very high engine temperatures.

When changing spark plugs in an engine, the manufacturer's recommendations should always be followed; that is, plugs should be replaced with those of the same type as originally supplied.

Extreme operating conditions may occasionally make it necessary to change the type of plugs, but in general this should not be done. One reason for using the same type of plugs is that the thickness of metal in the cylinder head varies with different engines, so various engines require longer or shorter plug bodies below the threaded portions in order to locate the points in the best igniting position in the combustion chamber.

Spark plug bodies are made in three different lengths—short, medium, and long. If a long bodied plug is used in an engine built for short plugs the lower end of the plug will extend too far into the combustion chamber, as shown at the left of Fig. 31, and it may be bumped and damaged by a moving valve or the top of the piston. This will also cause the plug points to overheat and may cause pre-ignition or early firing.

On the other hand, if a plug that is too short is used the points will be located in a pocket above the combustion chamber, as shown in the center view in Fig. 31. There is a tendency for dead gas to lie in this pocket and cause such a plug to misfire. This position of the plug points will often cause them to become badly fouled with carbon. In a few cases of extreme operating conditions short plugs may be temporarily used to avoid overheating and other troubles.

On the right in Fig. 31 is a plug of the proper length with its lower end just flush with the upper surface of the combustion chamber, and with the electrodes or spark points projecting about 3/16 of an inch into the chamber.

The distance or spacing between spark plug points has a very definite effect upon the performance of the engine. Incorrect setting of these points will often cause irregular operation and sometimes complete failure of an engine.

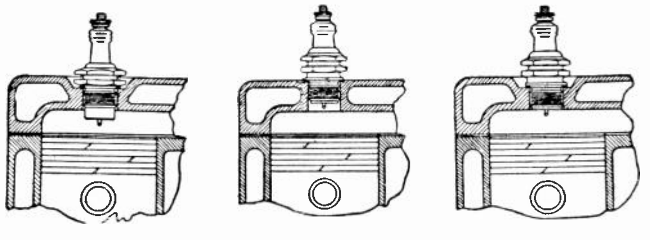

Fig. 31. The above sketches show spark plugs improperly fitted to the cylinder on the left and properly fitted in the cylinder on the right.

For normal compressions a gap of approximately .030 inch gives best results. High-compression engines will usually operate more satisfactorily with a shorter plug gap of about .025 inch for engines with compression pressure exceeding 80 lbs. per square inch.

In many cases the exact proper setting can only be determined by experiment or test, the best setting depending upon the running speed at which perfect performance is desired. For example, good low-speed operation can best be obtained with a rather wide gap setting while at very high speeds best performance is often obtained by closing up the plug gap slightly.

21. DISTRIBUTORS

On a modern ignition system the ignition coil produces the high-voltage impulses at the right time by the operation of breaker points or an interrupter such as was shown in Fig. 24. To deliver these high-voltage impulses to the proper spark plugs or to the cylinders in their proper firing order a device called a **distributor** is used.

The diagram in Fig. 32 illustrates the operation of this distributor. The rotor, R, is driven by a direct connection to the engine, so that it always revolves at a definite speed with respect to the engine speed. This rotor arm is connected to the high-tension lead from the ignition coil; so that as it revolves it delivers the spark impulse to the spark plugs in the various cylinders in the order in which they are connected to the stationary contacts in the distributor cap, which is made of insulating material.

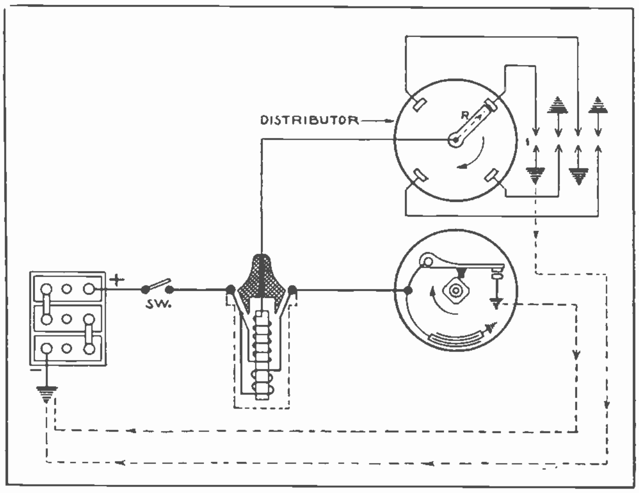

Fig. 32. Diagram of a battery ignition system showing both the primary circuit through the breaker points and the secondary circuit through the distributor arm contacts to the spark plugs.

The current flows from the distributor wires through the center electrodes of the various plugs; then across the spark gaps to the plug shells, which, of course, are grounded to the engine and allow the current to flow back through the engine and frame to the grounded terminal of the battery, and then to the return of the ignition coil secondary.

Fig. 33. This view shows a distributor with the high tension cap and rotor removed so that the primary breaker points and cam can be clearly seen in the distributor housing.

The term "distributor" is generally applied to the complete unit which contains both the interrupter points and the distributor rotor and contacts.

Fig. 33 shows a photograph of a distributor with the "cap" or "head" removed. This cap is shown at the upper right with its terminals for connecting the high-tension ignition wires. The one high-voltage wire from the ignition coil always connects to the center terminal of these caps, while the spark plug wires connect to the outer terminals in the proper order.

This distributor cap or head is made of bakelite or a compound of high insulating quality. On the inner side of the cap are located metal electrodes or stationary contacts for each terminal. The small rotor shown at the upper left fits on the top of the distributor shaft directly above the cam and rotates when the engine is running, delivering high-voltage impulses to the plugs through the stationary contacts in the distributor caps as it passes them.

In the lower part of Fig. 33 is shown the interrupter mechanism with the breaker points and cam in plain view. The small metal lever projecting to the left and fitted with a round eye is for shifting the distributor to advance or retard the spark by moving the breaker points a slight distance around the cam.

Fig. 34 is a top view of a distributor with the cap removed to show the breaker arm or contact lever, breaker contacts, cam, and condenser more clearly. The arm for shifting the breaker mechanism to advance and retard the spark is also shown in this view.

The number of sparks generated per revolution of the distributor shaft will depend upon the number of corners or projections on the cam. If the cam is four-cornered four sparks will be produced, and if the cam is six-cornered six sparks will be produced for each revolution.

As any automotive engine fires all cylinders in two revolutions of the crank shaft and the distributor is built to generate the sparks required for all cylinders in one revolution of the distributor shaft, the distributor therefore must be geared to the engine so that it rotates at one-half engine speed. This rule applies to all automotive engines.

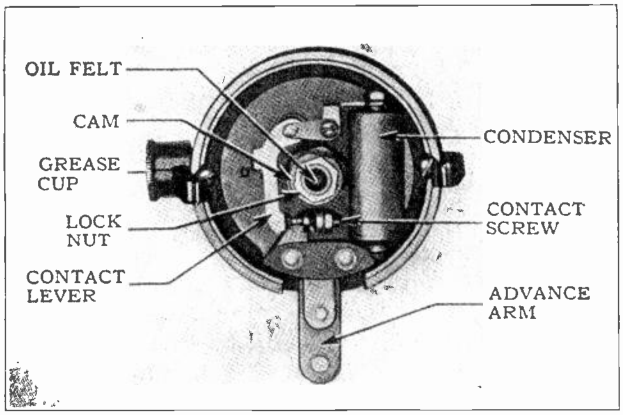

Fig. 34. Top view of the breaker mechanism and condenser of an ignition distributor. Note the names of the various parts.

22. METHODS OF ADVANCING THE SPARK

We have already mentioned the necessity for advancing the spark to obtain earlier ignition of the fuel charge and maximum power and efficiency when the engine is operating at very high speeds. There are two general methods used for advancing and retarding this spark through shifting the breaker plate or housing around the cam in the distributor.

These methods are the **manual control**, or hand-operated method, and the **automatic control** obtained by means of governor weights which advance the spark automatically with an increase of engine speed and without any attention from the drivers.

The manual method advances the spark by moving either the breaker plate or the entire distributor housing to shift the breaker contacts a slight distance around the cam. Moving the breaker contacts in the opposite direction to cam rotation causes the contacts to open sooner and advance the spark; while moving the housing or breaker in the direction of rotation of the cam will retard the spark. This movement is generally obtained by the driver moving a small lever attached to the steering wheel and connected through a rod to the lever on the side of the distributor.

Efficient engine operation requires a gradual advance of the spark as the engine speed is increased and a proportional retarding of the spark as the engine speed is reduced. It is practically impossible to meet this condition by hand operation, but the spark advance and retard can be much more rapidly regulated by automatic control.

Automatic spark advance is generally accomplished by shifting the position of the cam with relation to the distributor shaft. The cam is mounted in such a manner that it can be moved around the shaft a slight distance in either direction.

The operating mechanism consists of a set of weights which are attached to and rotate with the distributor shaft. As the speed of the shaft increases with an increase in engine speed, centrifugal force causes the weights to move outward from the shaft, the amount of this movement being proportional to the speed of the engine.

The governor weights are attached to the cam so that they cause it to shift around the shaft in the direction of rotation as the weights fly outward, thus advancing the spark. When the speed is decreased the weights are drawn in by springs and

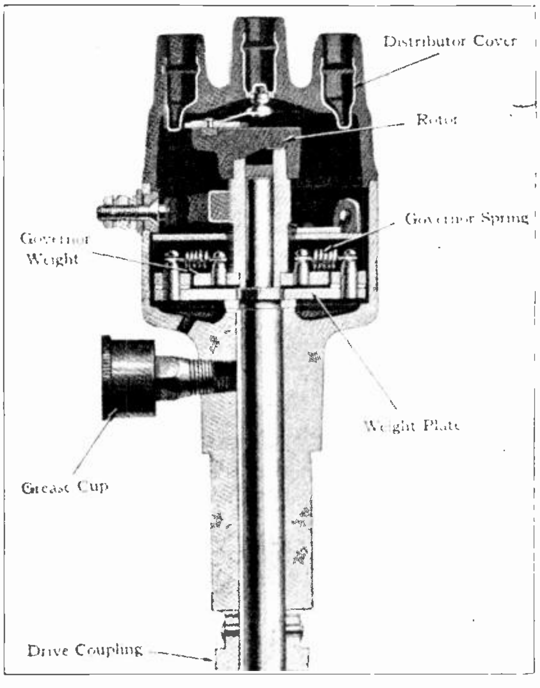

Fig. 35. Side sectional view through a distributor with automatic spark advance mechanism shown in the lower part and secondary rotor and contacts shown in the upper part.

the cam gradually moves back against the direction of rotation and retards the spark.

Fig. 35 shows a sectional view of a distributor in which the governor weights and springs can be seen in the lower part of the housing. Directly above these are located the cam and breaker points, and in the top of the distributor a rotor can be seen. The rotor has a permanent sliding contact connection with the center terminal of the distributor cap, while the metal tip of the rotor arm delivers a high-voltage impulse through a very short gap to the terminals of the spark plug wires as it passes them.

Fig. 36 shows a distributor of the automatic spark-advance type, with the cap and breaker element removed and the governor unit raised up out of the housing to show the weights and springs clearly. A loose cam is shown directly above the governor unit. When this cam is set in place on the shaft the wings on each side of its lower end fit over the pins on the governor weights; and, as these weights are thrown out or drawn in, the pins shift the position of the cam with respect to that of the shaft, thus effecting smooth and automatic adjustment of the spark with various engine speeds.

23. TIMING THE IGNITION

Timing the ignition means setting the distributor so that it supplies the spark to the correct cylinder at the right time; that is, not too late or too early.

The methods used to accomplish this vary somewhat with differences in distributor design; but the general procedure should be as follows:

1. Set the engine with No. 1 piston at U.D.C. on the compression stroke.
2. Move the spark lever to the full retard position.
3. Adjust the breaker contacts so that they are .020 inch apart when fully open.
4. Loosen the screw or nut which locks the advance lever to the housing.
5. Turn the distributor housing until the rotor arm comes in line with the contact on the cap that is connected to the spark plug in No. 1 cylinder.
6. Adjust the housing so that the breaker contacts are just beginning to open.
7. Lock the advance lever screw.

On some distributors the spark lever is riveted to the housing and cannot be moved. In such cases timing is effected by adjusting the cam on top of the shaft to a point where the rotor is lined up with segment 1 on the distributor cap as the breaker contacts are just opening. The cam is then locked in position by the locking screw or lock nut.

After the ignition has been timed, it is a good plan to carefully check the wires in the distributor cap to see that they are correctly connected. To do this the firing order of the engine and the direction of rotation of the rotor arm must be known.

The firing order is usually stamped on some part of the engine; but, if not, it can be readily determined by the methods explained in previous articles.

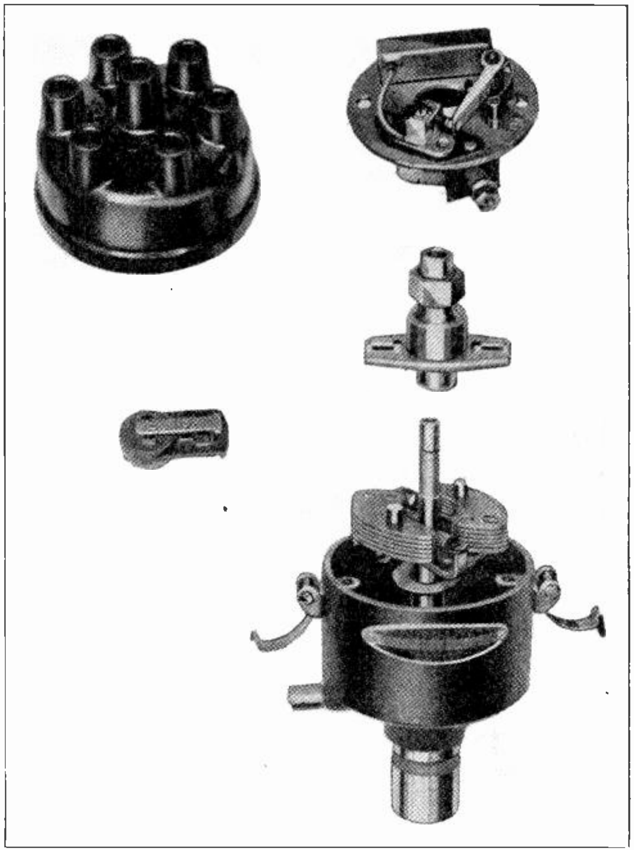

Fig. 36. Disassembled view of a distributor with automatic spark advance, showing the governor weights in the view at the lower right.

For example, on a six-cylinder engine with the firing order 1-5-3-6-2-4, No. 5 cylinder fires immediately after No. 1 and the wire from No. 5 spark plug should connect to the distributor cap segment that the rotor arm passes next after No. 1. The wire from No. 3 cylinder should connect to the next segment. And so on until they are all attached in the proper order. This method applies to all distributors using a single rotor arm.

24. SETTING THE ENGINE ON UPPER DEAD CENTER

One of the easiest methods of setting No. 1 piston on U.D.C. and one that can be applied to all side valve engines, is the "spark plug leakage" method. Unscrew the plug in cylinder No. 1 a few turns so that air can leak past its threads. Then pour into the recess around the plug just enough oil to seal this air leak. A couple of shots from an oil can will generally be sufficient.

Next, crank the engine slowly until bubbles are seen coming through the oil, which means that the piston is coming up on the compression stroke. Now bump the crank around just a little bit at a time and at each movement watch for the bubbles. When a point is finally reached where no bubbles arise when the crank is moved, that will be U.D.C.

The above method cannot be used on overhead valve engines as the plugs are generally screwed into the side of the cylinder instead of the top. With engines of this type the U.D.C. for cylinder No. 1 can be found by watching the valves and is reached just at the time the exhaust valve of the last cylinder closes or seats. This point can be determined by slipping a small piece of paper between the valve stem and rocker arm. As long as the rocker arm is holding the valve open against the tension of the spring the paper will be held firmly in place; but just as soon as the valve seats or closes, this tension will be removed from the paper and it will slip out if lightly pulled upon.

Remember that it is the **exhaust valve** in the **last cylinder** which is to be observed to determine **upper dead center** for **No. 1 cylinder.**

25. SPECIAL IGNITION SYSTEMS FOR HIGH-SPEED ENGINES

Some of the high-speed, high-compression engines used on late model automobiles require specially designed ignition systems for maximum operating efficiency. This can be better understood if we consider the fact that a six-cylinder engine using a six-cornered cam in the distributor and rotating at 3000 R.P.M. will have its breaker contacts opening 150 times per second, and these contacts remain closed only for about .004 second each time after making the primary circuit. These periods will be still shorter on a high-speed eight-cylinder engine.

In order to secure satisfactory operation at such speeds the ignition coil must be fast enough in action to build up its current during the short period of contact closure, and the breaker must do its work very accurately.

During the very short period that the contacts are closed a good contact without chatter or vibration must be made; otherwise the coil will not have time to completely magnetize and a very weak spark or complete miss will be the result.

26. DOUBLE OR "DUAL" IGNITION

To reduce the period of time required to burn the fuel charge and insure more complete combustion at high speeds, some engines are now being equipped with two ignition systems which operate together to supply two sparks to each cylinder.

These sparks occur at the same instant at different points in the combustion chamber, thus spreading the flame more quickly through the entire fuel charge.

The advantages claimed for the dual system are increased horsepower and efficiency, and also greater dependability because there are two separate ignition systems. If one should fail the engine can still be run on the other.

Fig. 37 shows a simple diagram of the coils, breaker, and high-tension leads to the distributor of such a system. From this diagram you can see that there are simply two separate sets of breaker points, condensers, ignition coils, and high-tension leads to the distributor.

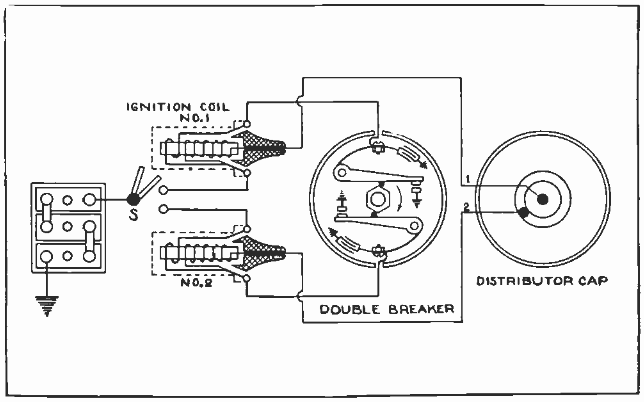

Fig. 37. This diagram shows the parts and connections of a dual ignition system used for firing two plugs in each cylinder. See the rest of this system in Fig. 38 below.

The only point at which these two systems are connected together is at the ignition switch, S; and, even though the two breaker arms are both operated by the same cam, they are electrically insulated or separated from each other.

Both breaker contacts are caused to open at the same time by the cam, and this causes a collapse of flux in both coils at the same time, in turn causing them to send high-voltage impulses to the two distributor terminals at the same instant. From this point the two impulses are delivered separately to the two spark plugs located in opposite sides of the combustion chamber.

Early types of double ignition systems used two separate distributor units, but these were later combined into one by changing the design of the rotor arm and distributor cap.

In Fig. 38 is shown a diagram of the connections from the distributor head to a six-cylinder engine equipped with dual ignition. The distributor cap has 14 terminals, 12 of which connect to the spark plugs, and the other 2 are connected to the high-tension terminals of the ignition coils.

The rotor arm for such a distributor really con-

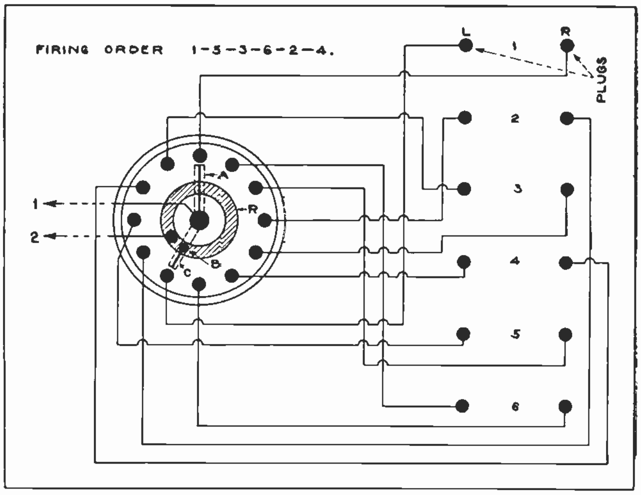

Fig. 38. Diagram showing distributor rotor arms and high voltage leads from the distributor cap to the spark plugs of a six-cylinder engine with a dual ignition.

sists of two arms electrically insulated from each other and rigidly connected together at an angle as shown in the figure. One arm conducts current from coil 1 to the spark plugs on one side of the engine. The other arm supplies current from the other coil to the plugs on the opposite side of the engine.

The high-tension lead from coil 2 connects to a conducting ring or slip ring, R, imbedded in the insulation material of the cap. From this ring the current is collected by a small carbon brush, B, that is mounted on the upper side of No. 2 rotor arm. From this point it travels along the arm to the plug segments on the cap and then to the spark plugs.

Six double sparks occur during each revolution of the distributor which means that sparks are produced every 60° of shaft travel, or 360 ÷ 6. However, the angle between the segments is only 30°, or 360 ÷ 12, and from this it can be seen that the rotor arm, A, for example, doesn't fire at every terminal it passes, but only at every other one. The same applies to rotor arm, C.

From the diagram you will note that when A is in position to fire any certain cylinder, C is in line with the segment which connects to the opposite plug in the same cylinder.

To obtain the best results from a double ignition system the sparks should occur at exactly the same time, and if they do not the breaker contacts should be adjusted so that they both open at the same instant.

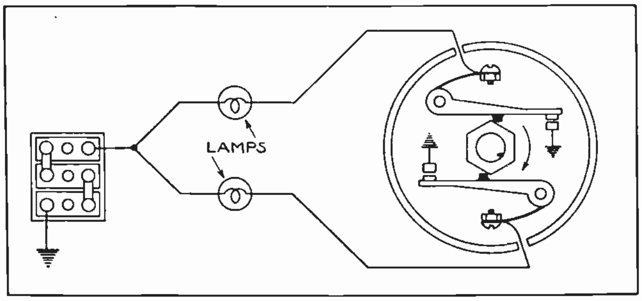

Fig. 39. This sketch shows the method of using test lamps for synchronizing breaker points of a dual ignition system.

To synchronize these breaker contacts, connect a six-volt test lamp in series with each set and a battery. Then rotate the distributor shaft very slowly until one light goes out. Now adjust the other set of contacts which are still closed so that the second light goes out. If both contacts are correctly set both lights will go out at the same instant when the distributor shaft is slowly turned.

Fig. 39 shows the methods of connecting lamps for synchronizing and adjusting the breaker points of a double ignition system.

27. SPECIAL DISTRIBUTORS FOR EIGHT-CYLINDER ENGINES

On account of the high operating speeds of modern eight-cylinder engines and because of the fact that every ignition coil requires a certain definite fraction of a second to fully magnetize its iron core, ordinary distributors have been replaced by specially designed units to meet high-speed requirements.

On earlier types of eight-cylinder distributors an eight-cornered cam and a single set of breaker contacts were used. This arrangement did not give good ignition at high speeds, as the period of contact closure was too short to allow the coil to become fully magnetized.

With eight-cylinder engines eight sparks must be produced in one complete revolution of the distributor shaft and cam, or one spark must occur for every 45° of shaft rotation, or 360 ÷ 8. This means that the breaker contacts must open and close once in every 45°.

After the contacts have opened the insulated cam follower which is mounted on the movable breaker arm has to travel over the corner of the cam and down the other side before the contacts are closed again. For this reason the contacts are held open for a longer period than is necessary. This results in the contacts being closed for only 20° out of each 45° of rotation, and being open for the remaining 25°.

As the contacts need to be open for only 10° to effect a clean break of the primary current, we can see that 20° of opening is unnecessary. What is required, then, for high-speed eight-cylinder engines is a distributor which will open the contacts for 10° to allow them to remain closed for the balance of the 45° interval during which each break must occur.

This has been accomplished by using distributors equipped with a four-lobe cam and two breaker arms which are mounted at an angle of 45° to each other, as shown in the center view in Fig. 40. With this arrangement the breaker arms are raised one at a time or alternately at 45° intervals so that one set of contacts closes 10° after the other set opens.

As both sets of contacts are connected in parallel in the primary circuit, the circuit is kept closed except for the 10° intervals during which both contacts happen to be open.

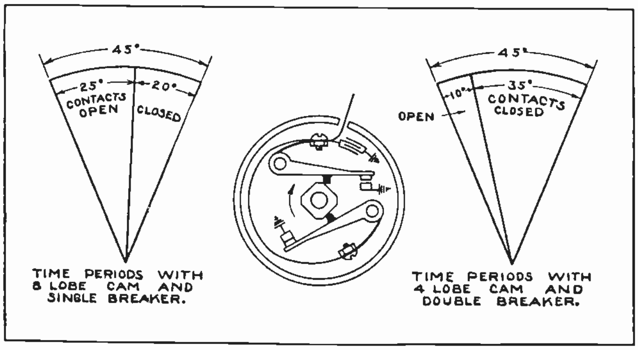

Fig. 40. Diagram showing construction of breaker mechanism for high-speed distributor and also showing periods of time which contacts remain open and closed with both single breaker and double breaker distributors.

As each set opens four times in one revolution of the distributor shaft and also opens at a point 45° from the opening of the other set, eight sparks per revolution are obtained, thus providing the proper number of sparks for an eight-cylinder engine.

Keep in mind that with this type of distributor when either set of contacts opens the other set is still open for another 10°; so, even though the contacts are in parallel, this effects a complete opening in the circuit for a period of 10° once during each 45°.

The sketch on the left in Fig. 40 shows 45° of the rotation of the old type distributor, illustrating the 25° period during which the contacts are open and the 20° period during which they are closed.

The sketch on the right in Fig. 40 shows a 45° period of the rotation of the new type distributor. In this sketch you will note that the contacts are open for only 10° and are closed for 35°, thus giving the ignition coil much more time to build up maximum flux and resulting in much better sparks at high speed.

The top view in Fig. 41 shows one of the double-breaker-arm, high-speed distributors in use with a single ignition coil on an eight-cylinder engine, and in the lower view in this figure a distributor of the same type is shown in use with two separate ignition coils, one of which is used with each set of breaker points.

With this system the distributor contact arms are not connected in parallel, but each one is connected to its own coil and each coil only produces a spark for every other plug or cylinder. This only requires the coils to operate at the same speed as for a four-cylinder engine and therefore gives them plenty of time to build up to full magnetization in the period during which the contacts are closed.

It also allows the coils to operate at a much lower temperature.

So we can see that this arrangement accomplishes the same result as the distributor and connection in the top view.

With either of the types of distributors shown in Fig. 41 each set of breaker contacts fires only every other cylinder, or one set firing four cylinders and the other set firing the remaining four.

For example, if the firing order of an engine is 1-6-2-5-8-3-7-4 one set of breaker contacts would fire cylinders 1-2-8-7, the other set firing cylinders 6-5-3-4. Therefore, if each cylinder is to get its spark at the correct time the angle between breaker openings must be exactly 45°. Any variation from this angle would mean that four of the cylinders would fire later in the piston stroke than the other four, and this would result in loss of power and poor, uneven engine performance.

To check the setting of breakers of this type a six-volt test lamp can be connected in series with the contacts. With a system such as shown in the upper view in Fig. 41, only one test lamp is necessary in the primary lead to the distributor. With the other system shown in the lower view in Fig. 41 two test lamps should be used, one connected in each of the primary leads to the separate sets of breaker contacts.

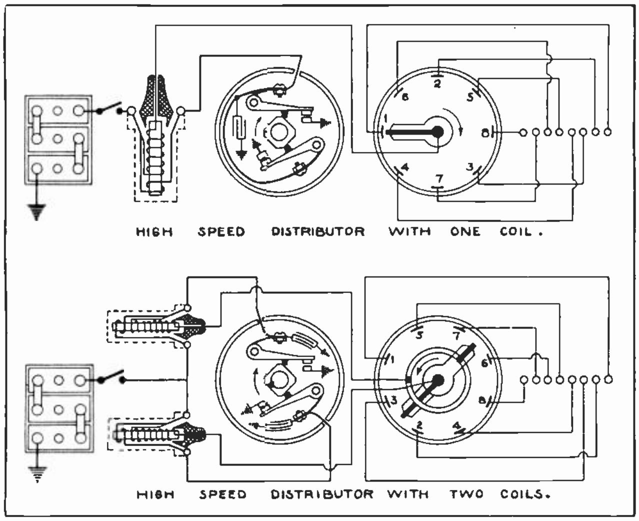

Fig. 41. The top diagram shows the connections for a high-speed distributor using one coil on an eight-cylinder engine. Below is shown the same type breaker using two coils and a slightly different arrangement of the secondary rotor arms and distributor cap contacts.

Then turn the distributor shaft very slowly by cranking the engine until the light goes out. Mark the position of the rotor arm on the edge of the distributor housing at this exact point. Then slowly turn the distributor again to the point where the light goes out once more. Mark this position of the rotor arm, and the space between the two points marked should be exactly 45° of the circle around the housing. Special gauges for accurately measuring this angle and instructions for their use can be obtained from the manufacturers of these special distributors.

In the case of the first system mentioned where one test lamp only is used the marks should be made at two points where this lamp goes out. In the case of the second system the first mark will be made where one lamp goes out and the second mark where the opposite lamp goes out.

28. IGNITION LOCKS

All automobiles are equipped with a key switch to close the primary ignition circuit when the engine is to be started and during running, and to open this circuit when the engine is to be stopped and the car to be left standing. Key switches of this type make it difficult for anyone but the owner of the car to turn on the ignition to start the engine and thereby tend to prevent automobile thefts. However, ordinary ignition switches can be quite easily wired around by anyone knowing something about electricity or ignition circuits, and for this reason such switches do not give very complete protection from theft.

Many of the later types of cars are equipped with special ignition locks and primary wiring that is a great deal more difficult to tamper with. Cars so equipped are therefore more nearly theft proof.

Fig. 42 shows a diagram of a system of this type. By examining this sketch you will note that when the ignition switch is turned off it not only breaks the primary ignition circuit, but also grounds the wire which leads to the insulated movable arm of the breaker contacts. As the stationary breaker point is already grounded, this short circuits the breaker points, thus making it impossible for them to open the circuit and create a spark even if the ignition switch is shorted out with an extra wire.

The wire leading from the ignition lock or switch to the distributor is enclosed in heavy, steel-armored cable, to make it very difficult to cut this wire and release the locked short on the breaker points. Locks of this type are, of course, not absolutely theftproof but they make it so much more difficult for a car to be tampered with that they afford a great deal of additional protection against theft of the car.

In the case of trouble in an ignition system it may be necessary to test the switch to determine whether the fault is located in it or not. To test these lock switches use a six-volt battery and a head light bulb connected in series with a set of test points or leads.

To make the test proceed as follows: Turn the engine until the breaker contacts are fully open and then remove the coil wire from the switch terminal, T. Next place one test point on the insulated or movable breaker arm and the other on the switch terminal. With the switch turned on the lamp should light and with the switch off the lamp should not light.

Then place one test point on the insulated breaker arm and the other on the lock case. With the switch off or locked the lamp should light. With the switch turned on or unlocked the lamp should not light. If the lamp lights with the switch in the "on" position, the insulated breaker arm has become grounded due to defective insulation, the condenser is grounded, or there is a ground in the lock itself.

Disconnect the condenser and repeat the test. If the lamp does not light now the condenser is defective. If the lamp does light, disconnect the breaker arm and repeat the test again. If this puts the lamp out the breaker arm was grounded. If the lamp still remains lighted the trouble is undoubtedly in the lock, and will necessitate removing the lock to disassemble and test it.

29. TROUBLE-SHOOTING ON IGNITION SYSTEMS

In order for an automobile engine to start readily and operate satisfactorily throughout its entire speed range it must have fuel of the correct mixture, good compression, and a good spark or ignition.

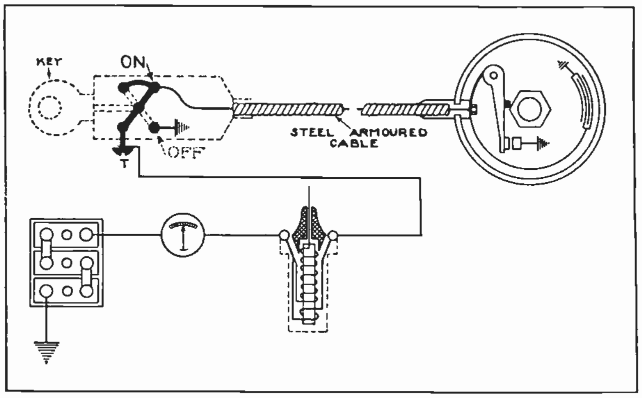

Fig. 42. The above sketch shows the primary ignition circuit through a special ignition lock switch and cable. Study the principles of this circuit carefully while reading the accompanying explanation.

Failure of any of these will result in poor performance or may prevent the engine starting at all.

When checking to locate troubles and causes of poor operation or refusal to start, the automobile trouble-shooter will generally commence with the ignition system, partly because it is one of the easiest things to check and also because trouble more frequently develops in the ignition than any other part of the engine.

Ignition systems and devices have been greatly improved in the last few years, but because of the number of small parts necessary in these systems and the delicate nature of some of these parts, there are numerous possibilities of small troubles developing which may interfere with the operation of the engine.

When we also consider the fact that the ignition devices and wiring of the systems are subjected to very extreme service conditions due to the severe vibration, dirt and dust, engine heat, and oil which the ignition devices and wiring are subjected to, we can understand better why some of these troubles occur.

We should also consider the fact that on an automobile ignition system there are used both extremely low-voltage circuits and extremely high-voltage circuits. In the six-volt circuits to the primary of the ignition coil and to the starting motor, lights, horn, etc., the slightest loose connection or resistance in the circuit will greatly interfere with the current flow.

In the high-voltage circuits from the ignition coil and distributor to the spark plugs, the slightest defect in the insulation will allow leakage or grounding of this energy.

It is estimated that approximately 75% of the ordinary engine failures encountered by the service man are due to ignition faults. However, as many engine failures are due only to an empty gasoline tank, clogged fuel line, choked or flooded carburetor, leaky vacuum tank or fuel pump, loose intake manifold or poor compression, it pays to keep these things in mind and not overlook them before going into any elaborate overhauling or repairs to the ignition system.

It is so easy to check to see whether the gas tank is empty or not, or whether gasoline is reaching the carburetor, and also to check the engine compression by merely turning the engine slowly with the crank, that every electrical service man should watch for these troubles and know how to check them. Keeping these possible troubles in mind, as well as those that may occur in the electrical system, may also save you considerable time and money with your own car when it fails to operate properly out on the highway.

If the compression of an engine is poor because of leakage past the piston rings or through poorly fitting valves, the engine will operate irregularly because of loss of part of the fuel charge on such cylinders and loss of power or misfiring due to the low pressure of the fuel charge.

Therefore, it is necessary for smooth operation of the engine that the pistons and valves be in good condition to maintain good and uniform compression in all cylinders.

If the intake manifold or carburetor connections are loose the suction on the carburetor jet may not be sufficient to raise the proper amount of fuel, or the amount of extra air drawn in through these openings may be great enough to make the fuel mixture so "lean" that it will not fire properly.

In electrical trouble-shooting on an automobile engine two of the most important things are **careful and close observation of the wiring and parts of the system,** and **the use of a definite systematic method of testing each part of the system.**

Very often electrical troubles are caused by loose connections, broken wires, defective insulation, or faults in some of the devices which can be easily seen by carefully checking over the system. There is probably no single rule or method of trouble-shooting that will apply to all cases, because of the various types of equipment used and the varying trouble indications that may sometimes be produced by the same fault.

One very good general rule, however, is **to start at the unit which appears to cause the trouble and work from that point back toward the battery.**

For example, with a failure in the ignition system start at the spark plugs and check from there back from the high-tension wire to the distributor. Check the distributor for faults both in the high-tension and low-tension circuits, and then if the fault is still not located, check the wiring back to the ignition coil.

Next check from the ignition coil to the ignition switch; and so on, making sure before leaving any particular point that the system is O. K. up to that point and cannot be the cause of the trouble.

Some of the various defects which commonly occur in ignition systems and also their symptons and remedies will be discussed in following paragraphs.

30. COMMON ELECTRICAL TROUBLES AND REMEDIES

First, let us suppose that an automobile engine will not start. One of the first things to check in this case, after making sure that there is fuel in the carburetor is the battery.

Try to operate the starting motor and if the starter turns the engine over quite lively the battery is O. K. If the engine turns over sluggishly or not at all the battery should be checked for low-voltage, low gravity of the acid, or loose connections. The tests for voltage and acid conditions will be covered more fully in the section on Storage Batteries.

Very often starter trouble and weak ignition are a result of loose connections at the battery terminals. Because of the very heavy currents required at low-voltage to operate the starting motor, the battery connections should be very securely tightened and the terminal posts and connecting clamps should be well cleaned. Otherwise the small amount of resistance placed in the circuit by dirty or loose connections will cause so great a voltage drop during the flow of the heavy starting currents that the starting motor will not develop sufficient torque to turn the engine.

Even if it does turn the engine the voltage drop during operation of the starting motor may be great enough to reduce the current flowing to the ignition coil and produce sparks too feeble to ignite the fuel mixture.

Battery connections may be good enough so that the lights and horn will operate alright when the car is standing idle, but yet not good enough to supply sufficient current to the starting motor and ignition coil to start the engine.

One of the reasons why an engine that will not start when being slowly turned over by the starter can often be started by cranking, is that when the starting motor is left out of service it allows the battery to supply more current to the ignition coil and produces a hot enough spark to ignite the gasoline mixture when the engine is cranked.

31. TROUBLE AT SPARK PLUGS

After the battery and its connections prove to be O. K., next test for a good healthy spark at the plugs. Remove one of the high-tension wires from its plug terminal and hold it about one-fourth of an inch away from the engine as at "A" in Fig. 43, to see if a good spark can be obtained when the engine is turned over.

If regular and healthy sparks can be obtained in this manner from each plug wire, the trouble is either in the plugs themselves or the ignition is out of time.

In judging the spark obtained on such tests remember that a thin, weak, threadlike, blue spark may not be sufficient to ignite the gasoline mixture in the cylinder, and also remember that a spark plug will jump considerably farther in open air than it will under compression inside the cylinder. In order to dependably ignite the fuel mixture, the spark should be hot and fiery appearing, or "fat" as it is often called. It is not alone the voltage of the spark that ignites the gasoline mixture but also the amount of current and the heat developed that make a good spark.

If good hot sparks can be obtained from all of the plug wires and yet the engine will not start, remove the plugs and examine them. If they are dirty or carbonized they should be cleaned and the points should be checked to see that they are set about .030 inch apart. If any of the plugs have cracked insulators or the points are badly burned away, they should be replaced.

Also be sure to see that the outer ends of the plug porcelains are clean and free from dirt and moisture, as sometimes a layer of moisture or damp dirt will allow the spark to creep along the surface of the porcelain and short circuit to the plug shell in this manner, rather than jump across the plug points inside the cylinder. Carefully wiping the plugs with a clean cloth or a cloth dampened with kerosene will generally remedy this.

Very often a car that has become water-soaked in a heavy rainstorm or has had snow blown in through the radiator and melted on the plugs will refuse to start because of the combination of water and dirt on the surface of these insulators.

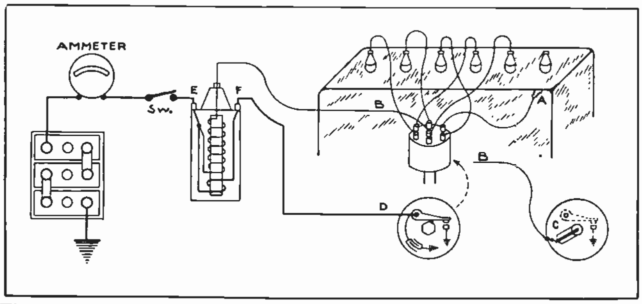

Fig. 43. Sketch illustrating methods of testing for ignition troubles. Refer to this sketch frequently while reading the paragraphs on this subject.

32. DISTRIBUTOR TROUBLES

If the plugs are in good condition and receiving good sparks and the engine still doesn't start, check the timing. Crank the engine around to bring No. 1 piston at U.D.C. on the compression stroke. Then retard the spark lever and remove the distributor cap.

The rotor arm should be in line with the contact on the cap that is connected to cylinder No. 1, and the breaker points should just be opening. If this condition is not found then retime the ignition as explained in an earlier article.

If no sparks are obtained when a plug wire is held near the engine, pull the high-tension coil lead, B, from the center terminal of the distributor cap and hold it close to the engine. If a hot spark jumps regularly to the engine with this test, the trouble is in the distributor cap, rotor arm, or plug wires; because you have proved that the ignition impulses are being delivered from the coil to the distributor but are not getting from the distributor to the plugs.

In this case remove the distributor cap and hold the high-tension coil lead close to the **rotor arm,** as at "C" in the small illustration in Fig. 43. Make and break the circuit at the interrupter points, and if a spark jumps to the rotor it is defective and should be replaced. If the rotor is O. K. examine the distributor cap. If it is wet, dirty, or oily it should be thoroughly cleaned with gasoline and a cloth. If the cap is cracked or burned it should be replaced.

In the type of distributor caps now in general use the end of the rotor arm doesn't make actual rubbing contact with the cap terminals but instead allows the spark to jump through a very small air gap as it passes from the rotor arm to the cap contacts. This spark in time burns away the contacts and forms upon them a scale which has a very high resistance and may weaken the spark to a point where it can no longer ignite the fuel charge.

To remedy this, remove the scale with emery cloth or sandpaper. If the contacts are badly burned away the air gap will be too great and the cap and arm should be changed.

If the high-tension section of the distributor has been carefully checked and found to be in good condition, carefully inspect the high-tension wires leading from the distributor cap to the plugs. These wires are heavily insulated with rubber and are generally protected by an additional coating of varnished braid, as they must carry the very high voltage impulses to the plugs without allowing leakage or grounding to the metal parts of the engine which they are near to and often come in contact with.

The insulation of these wires is subjected to very severe conditions, due to heat of the engine and the oil which is often thrown upon them and is very damaging to the insulating qualities of rubber. Leakage through the insulation of one of these wires would not be likely to interfere with the starting of the engine, although it would probably cause missing when the engine is operating.

However, if several of these wires should become grounded or leak badly it might prevent the engine from starting. If these wires are found to have cracked or brittle insulation, or if the rubber has become soft and mushy due to the action of oil, and particularly if sparks or leaks are detected along the surface of these wires, then they should be replaced.

33. BREAKER POINT TROUBLES AND DEFECTIVE CONDENSERS

If no spark can be obtained from the high-tension wire of the ignition coil when the engine is cranked or when the breaker points are opened, the breaker contacts should be carefully inspected to see that they make good contact when closed and that they are separated the proper distance (.020 inch) when fully open.

The surfaces of these contacts very often become burned or dirty, and a very small amount of dirt or blackening can increase their contact resistance to such an extent that the primary of the ignition coil will not receive anywhere near enough current. Small particles of grit or sand stuck to one of these points may prevent the engine starting.

Dirty breaker-contacts can be cleaned by drawing a piece of fine sandpaper through them, with a light pressure applied to hold the contact surfaces against the rough side of the paper. They can also be cleaned by use of a thin breaker point file. Contacts that are badly burned or pitted should be replaced, as the cost of new contacts is very cheap compared to the trouble bad contacts may cause.

To determine whether these contacts are properly making the primary circuit to the coil, snap them apart and watch for a small spark as they open. If this spark occurs it indicates that primary current is flowing through them. The trouble with the system is then likely to be in the condenser or coil.

Bad sparking and heating of the breaker contacts generally indicates an open-circuited condenser. A shorted condenser will prevent current flowing through the breaker points at all. A good way to check the condenser is to disconnect it and hook in another one that is known to be good. If the breaker points and condenser are proven to be O.K. then the trouble is probably in the ignition coil and the coil should be removed and tested.

34. TROUBLE TESTS ON IGNITION COIL AND PRIMARY WIRING

If the coil tests O.K. then carefully check the primary circuit for high resistance caused by poor contacts or loose connections. If the coil delivers no spark when the primary circuit is broken the failure may be caused by a ground between the coil and the breaker arm, or by the breaker arm being grounded, the condenser grounded, or an open circuit somewhere between the distributor and the battery.

Disconnect the primary wire, D, from the distributor and touch it to the engine, and if a flash is obtained it proves that this wire is good and is carrying current from the battery to the distributor, and that the trouble is probably in the breaker arm.

Disconnect the condenser and touch the primary wire to the distributor arm while the breaker contacts are open. If this produces a flash the arm is grounded. Repeat this test on the insulated terminal of the condenser and if a flash is produced it indicates a grounded condenser. If the primary wire, D, fails to produce a flash when touched to the engine it should be disconnected from the coil terminal and replaced by another wire.

If the new wire gives a flash when touched to the engine the original wire must have been grounded or open. If no flash can be obtained with the new wire then remove the other wire from the opposite primary coil terminal, E, and touch it to the engine. If a flash is obtained in this manner it proves that current was supplied from the battery to the primary of the coil and that the ignition trouble is probably in the coil.

This trouble is likely to be a burned out resistance element, a burned out primary coil, or a grounded coil. With the wire, D, between the coil and the distributor connected and the breaker points closed, or with a direct ground connection from coil terminal F to the engine, if no flash can be obtained on the other coil terminal it indicates an open circuit such as a burned out resistance or burned out primary.

With the connection entirely removed from terminal F, or the distributor side of the coil, if the lead touched to the other side produces a flash it indicates that the coil is grounded. If no flash can be obtained when touching to the engine the end of the wire which has been removed from terminal E and should feed current to the coil, this indicates an open circuit, probably due to a fault in the ignition switch or a poor connection at the ammeter, or possibly it is due to a break in the wire underneath the insulation.

The ammeter itself will often give some helpful indications in ignition troubles. If when the breaker contacts are known to be closed the ammeter gives no reading when the ignition switch is turned on, this indicates an open circuit in the primary ignition wiring, or dirty high-resistance breaker contacts.

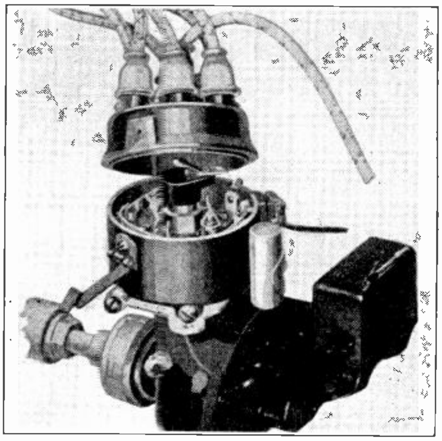

Fig. 43-A. Photograph of distributor with high-tension cap removed showing rotor arm in place and double breaker points beneath. Also note the high-tension wires connected to the cap and the water shields which are placed over the connections.

The open circuit may, of course, be a broken wire, loose connection, or a defective coil or coil resistance. It may also be in the ignition switch itself.

If the ammeter gives an excessive reading or throws the needle clear across the scale when the ignition switch is turned on, this indicates a ground in the primary wiring or one of the devices of this circuit.

From the foregoing explanation we can see that electrical trouble shooting on an automobile ignition system is just a process of systematic elimination. By testing one part at a time in the manner suggested, it is possible to definitely and accurately corner the trouble in whichever part of the device or wiring it may be located.

For this reason it is well to thoroughly study the very simple diagram given in Fig. 43, or the diagram of any particular ignition system on which you may be working, and also to have the circuit well in mind before starting to shoot trouble. You can easily corner any trouble if you know exactly where the current ought to flow to operate the various devices and then check to find just how far it does go along this path.

After the first general inspection to see if any broken or grounded wire or loose connections can be noted, one should avoid jumping from one part of the system to the other but should rather follow the system straight through, testing one part at a time, each in order, as explained.

35. IGNITION TROUBLES THAT CAUSE ENGINE TO MISS

Various faults can occur in ignition systems which, while they do not prevent the engine starting, will cause it to fire very irregularly or miss on certain cylinders and operate with greatly reduced power.

One very common cause of an engine missing is faulty spark plugs. To check the spark plugs, short circuit the plug gap by bridging between the plug terminal and the engine with a screw driver. This grounds the plug and prevents a spark from occurring at its points. When the engine is running and a good plug is shorted in this manner the engine will slow down and run more unevenly than before.

Shorting out a bad plug, however, will have no noticeable effect on the operation of the engine. In this way a bad plug can often be quickly located and adjusted or replaced. This same test, however, might also indicate a cylinder that is not firing because of poor compression due to leaky valves or some other cause, so the test is not always an indication that the plug is bad.

When an engine with many cylinders is being tested in this manner it is sometimes difficult to tell whether a plug is firing or not, as one bad plug in an eight-cylinder engine, for example, would not produce a very noticeable indication or slowing down.

To overcome this and quickly detect the missing cylinder or cylinders, the engine can be run on one-half of its cylinders by removing the plug wires from the spark plugs in the remaining half. While operating in this manner the missing cylinder can be easily and positively located, because of the great difference that will be noticed when one of the good plugs is shorted out.

When a bad plug is found it should be cleaned and adjusted or replaced.

Missing may also be caused by defective insulation on the high-voltage secondary wiring, either between the distributor and the plugs or between the secondary of the coil and the distributor. This can generally be found by carefully inspecting these wires for cracked, softened, or defective insulation, and also by feeling along their surfaces for slight leakage which will produce a shock when the spot is touched.

Sometimes by carefully watching and listening when the engine is running you can detect sparks or light, snapping noises from leakage sparks which are flashing through the insulation on the wires to the metal parts of the engine or to the tube or clamps in which the wires are supported.

When any of these wires begin to leak high-voltage energy, the best remedy is to replace all of them with new ones.

Distributor faults may also be the cause of missing and irregular engine operation. Some of the more common of these faults are breaker contacts dirty, pitted, or improperly adjusted; movable breaker arm sticking in its pivot; untrue breaker cam; distributor shaft wabbling due to worn bearings, or distributor housing loose in its socket.

If the bearings allow the distributor shaft to move off center more than .003 inch they should be replaced. If the engine runs smoothly at low speeds but misses at higher speeds it may be caused by the plug points being set too far apart, breaker contacts set to open too far, insufficient spring tension on the movable breaker arm, worn cam follower, defective condenser, etc.

All battery ignition systems produce weaker sparks at high speeds because of the shorter period of contact closure and less complete magnetization of the coil between breaks. Therefore, anything which tends to further reduce the very short period of time that the coil primary circuit is closed (such as weak breaker springs or worn and lengthened cam follower) will interfere with ignition at high speeds.

Any of the causes of missing previously mentioned might also be responsible for poor engine performance at high speeds.

If the engine lacks power and overheats, the ignition timing should be checked to see that the sparks are not occurring too late or too far retarded.

Late ignition will always decrease the power of an engine and cause it to overheat, and it should be corrected by timing the engine properly as explained in an earlier article.

If the timing is right the carburetor adjustment should be checked. If changing this adjustment fails to "pep" up the engine, next check the valves and see that the clearance between the end of the valve stem and its tappet or rocker arm is correct. This clearance varies with different engines and the manufacturer's recommendation should always be followed when it is known, but if the manufacturer's figure is not known, a clearance of .006 inch for intake valves and .008 inch for exhaust valves will generally give good results.

These settings should be made while the engine is warm and the clearance should be determined by a feeler gauge.

Another possible cause of an overheated or sluggish engine may be improper valve timing.

A good general rule to follow when checking engine trouble is to first check the ignition, then the fuel system, and then the valves, always keeping in mind that any of these can be the cause of the various troubles outlined in this section.

36. HIGH-TENSION MAGNETOS

High-tension magnetos are extensively used in the ignition systems of trucks, tractors, and aeroplane engines. Their principle of operation is almost the same as that of the high-tension ignition coil, except that magnetos generate their own low-voltage primary current instead of receiving it from a battery.

You are already well familiar with the principles of operation of D.C. and A.C. generators, so it is not necessary to go into great detail as to these principles of magnetos.

High-tension magnetos consist of the following important parts:

1. A set of permanent magnets for producing a magnetic field.
2. A rotating iron core or armature on which the coils are wound.
3. A primary winding to generate low-voltage energy, and a secondary winding to step up this voltage.
4. A set of breaker contacts to interrupt the primary circuit and cause the flux to collapse.
5. A condenser to prevent arcing at the breaker contacts and increase the secondary voltage.
6. A distributor to direct the spark impulses out to the different spark plugs.

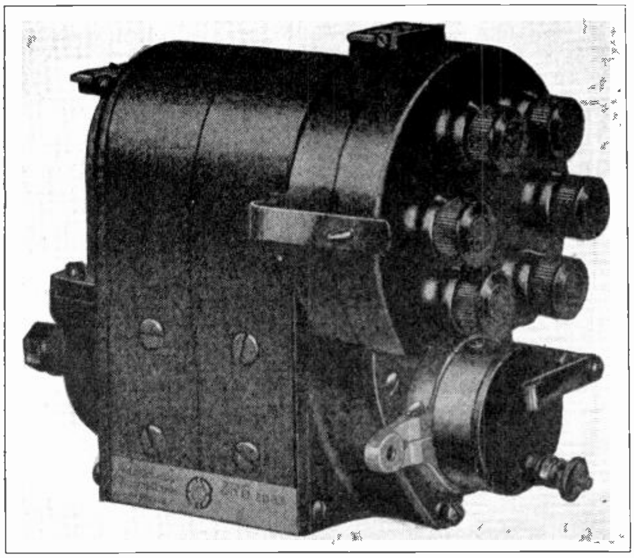

Fig. 44. Photograph of a high tension magneto used for ignition purposes on trucks, busses, tractors, etc. Courtesy Bosch Magneto Corporation.

Fig. 44 shows a common type of magneto for use with six-cylinder engines. The two large horseshoe-shaped permanent magnets which supply the magnetic field can be seen over the body of the magneto. On the lower right-hand end is the housing which contains the breaker points, and on the upper right end is the distributor housing with the terminals for the six spark plug leads clearly shown. On the left end of the magnet is shown a coupling by which its armature is driven by connection to the engine. The armature revolves between pole faces attached to the lower ends of the permanent magnets.

Fig. 44-A shows a magneto armature removed from the housing and field frame. The heavily-insulated primary and secondary coils are shown wound on a simple spool form, or the center leg of the armature core at No. 1.

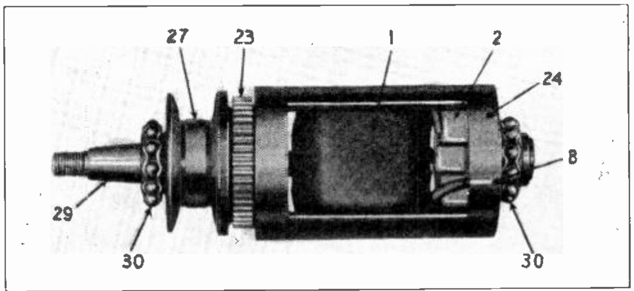

Fig. 44-A. Magneto armature removed from housing to show bearings, slip ring, armature core, windings, and condenser.

At 2 is shown the condenser, which is also contained in the armature. The ground on the iron armature core is shown at 24, and one of the primary leads is grounded or connected to this core at B.

No. 23 is the gear which drives the distributor mechanism, 27 is the insulated slip ring at which the high-voltage energy from the secondary is collected by means of the brush and carried to the distributor.

At 30 are the ball bearings in which the armature rotates, and at 29 is the end of the shaft by which the magneto is coupled to the engine.

37. CIRCUITS AND OPERATING PRINCIPLES

Fig. 45 shows a diagram of the primary and secondary windings of a magneto armature. You will note that the upper end of the primary connects to one side of the condenser and then through the breaker points to ground, while the lower end of the primary connects to the other side of the condenser, and directly to ground. This places the breaker points in series with the primary winding and the condenser directly across the breaker points.

The inner end of the high-voltage secondary coil is connected to the primary and thus obtains a ground connection, while the outer end of the secondary is connected to the insulated slip ring, S, and delivers the high-voltage energy from this ring

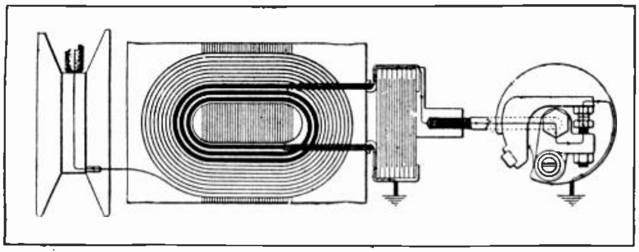

Fig. 45. Diagram of primary and secondary windings of a common magneto armature. This diagram also shows condenser and breaker points on the right and the high tension slip ring on the left. Courtesy Bosch Magneto Corporation.

to a brush and then through the distributor to the spark plugs.

Fig. 46 is a diagram showing the position of a magneto armature between the pole faces of the permanent magnets, and also shows the direction of magnetic flux travel through the armature from the north to the south pole.

With the armature core in its present position, the flux built up between the two field poles is at maximum; but as the core is turned to a point at right angles to its present position it doesn't provide nearly as good a path for the magnetic lines and thus causes a great reduction or sudden collapse of the flux, twice during each revolution.

This collapse and building up of the magnetic field as the armature is rotated causes the magneto to generate low-voltage A. C. in the primary winding. By using in this primary coil circuit a set of breaker contacts to interrupt the current flow just as the field flux is collapsing, the flux around the primary turns is also allowed to collapse, with the result that the double flux collapse induces a very high-voltage impulse in the secondary winding, which consists of a great number of turns of fine wire.

To obtain maximum voltage the primary circuit should be broken just at the point when the greatest amount of voltage and current are being induced in it.

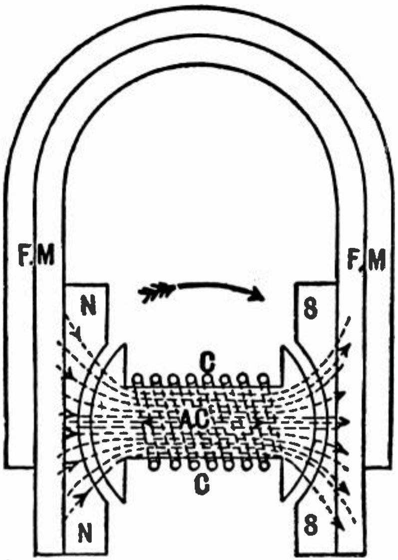

Fig. 46. This sketch shows the position of the armature between the pole pieces of a magneto and shows the path of the flux from the permanent magnetic field.

Referring to Fig. 47 we find that with the magneto armature in a position shown at "A" flux is passing from the north pole downward through the core to the south pole.

If this armature is revolving clockwise we can see that its top and bottom sides are just about ready to break away from the poles they have been passing and approach the opposite poles. As they pull away from the poles the strong magnetic field which was passing through the armature core collapses and shifts over in the opposite position shown at "B". Here the flux is still passing from the north to the south poles of the permanent magnets, but it is now passing upward, or in the reverse direction, through the armature core.

We find, therefore, that the point of maximum flux movement or change, and also the point of maximum voltage generated in the primary, will be just as the magneto armature breaks away from one set of poles and passes on to the next, or while it is moving from the position shown at "A" to that shown at "B".

The maximum voltage will be generated in the primary winding when the armature is in the position shown at "C" in Fig. 47, and this is the point at which the breaker contacts should interrupt the circuit.

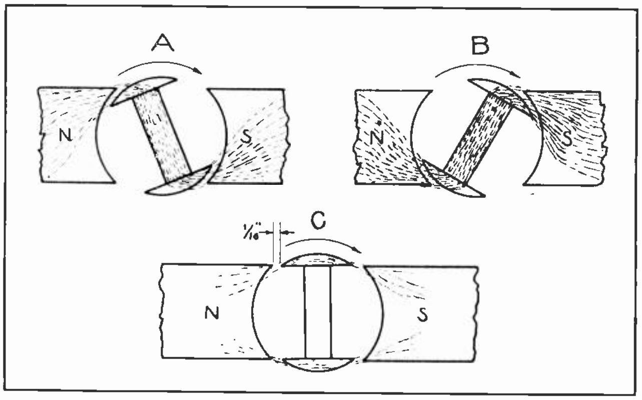

Fig. 47. The above sketches illustrate the shift and collapse of flux as a magneto armature rotates between the field poles to cause the induction of voltage in the armature coils.

Magnetos are so constructed by the manufacturer that when the breaker housing is in the full advance position the breaker contacts will open the primary circuit when the armature is in the position shown at Fig. 47-C, or when the armature tip has left the pole tip by a distance of about 1/16 of an inch.

Any variation from this setting would greatly weaken the spark, and to prevent altering the timing of the breaker contacts when the magneto is taken apart for inspection or repair, a keyway is cut in the armature shaft to receive a key on the breaker plate so that the two will always be locked together in the proper position.

Fig. 48-A shows a diagram of the primary and secondary circuits of an ordinary magneto, and also shows the connections and locations of the various important parts. Trace this circuit carefully and

compare it with Figs. 44 and 45 until you thoroughly understand the general construction and wiring of a magneto.

Note how a number of the circuits are completed by grounding the connections to the armature core and metal parts of the magneto frame. The solid black parts of the sketch indicate the insulating material which separates various metal parts of the magneto and parts of the circuit.

In tracing this circuit you will find that the breaker points are in series with the primary coil and that the condenser is connected across these breaker points. One end of the secondary coil is connected directly to the primary winding to obtain a ground through this low-resistance winding, although in many magnetos it is connected directly to ground at the other end of the primary. The other end of the high-voltage secondary delivers its impulses to the distributor through the insulated collector ring, brush, and conductor rod or pencil. From the distributor the impulses are sent in the proper order by means of a timed rotor to the spark plugs.

38. MAGNETO SAFETY GAPS

Note the safety gap which is connected between the high-tension lead and ground, to protect the secondary winding from excessive voltage strain in case the spark plug gaps become open too far or the secondary lead becomes broken.

As long as the spark plugs remain in proper condition and connected to the secondary leads the magneto needs to build up only about 6000 volts to flash across the 100,000 ohms approximate resistance of the spark plug gaps under compression.

If the resistance of this secondary circuit is increased by a broken secondary wire or the spark plug gaps becoming too widely open, the secondary voltage will rise to an excessive value. This places a very high strain on the insulation of the windings and if allowed to continue will eventually puncture and break down this insulation. As the armature insulation cannot easily be repaired this generally means that the entire armature will have to be replaced.

The safety gap connected in the manner shown is really in parallel with the spark plug gaps in the entire secondary winding to ground. With this gap set at about 5/16 of an inch, 8000 volts will send a spark across it, so the voltage strain on the insulation can never rise above this value, and the possibility of puncture is greatly reduced. Under normal operating conditions the spark will jump the plug gaps, as their resistance is lower than that of the safety gap.

Fig. 48-B shows a simplified wiring diagram quite similar to the one in Fig. 48-A, except that the various parts are shown further apart to make the circuit easier to trace. In this diagram it is very easy to trace the circuit of the primary coil through the breaker points and to note that the condenser is connected across these points.

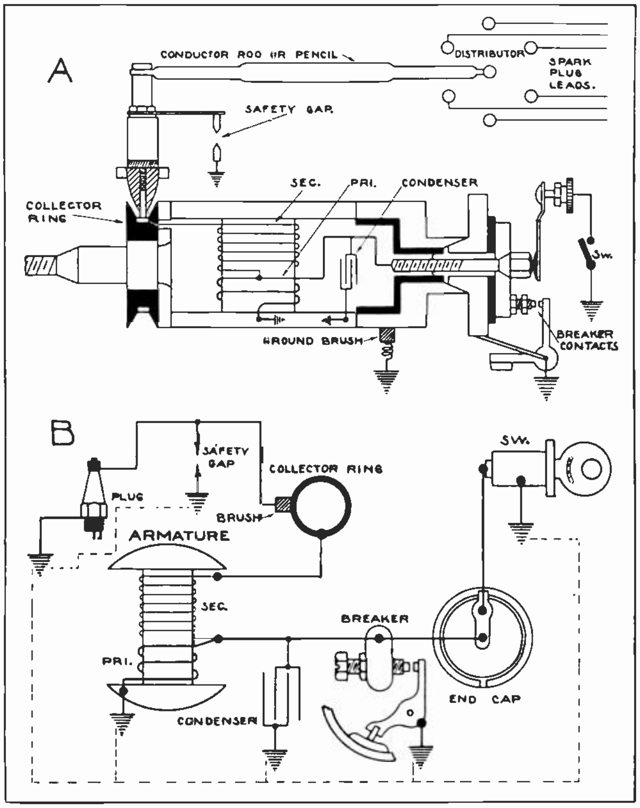

Fig. 48-A. Diagram showing complete primary and secondary circuits of a magneto. B. Another diagram showing a different arrangement of the primary and secondary circuits and important parts of the magneto.

The secondary circuit can also be easily traced through the collector ring, brush, the single spark plug shown, and back through the grounded connections, primary coil, and to the start of the secondary. The dotted lines in this circuit show the ground path created through the metal parts of the magneto by grounding one end of each of the various devices.

39. GROUND BRUSH AND IGNITION SWITCH

Magneto armatures are generally supported in ball bearings, and in order for the secondary current to complete its circuit from the frame to the armature through the grounded connections, the current would ordinarily have to flow through these bearings. This would tend to pit the balls and ball races of the bearings and also to carbonize the grease with which they are lubricated, and thus would result in very rapid wear of the bearings.

To avoid this a small carbon brush is inserted through the base of the magneto and held in contact with the rotating armature by a light spring. This brush is called a **ground brush**, and provides a path of lower resistance than the bearings, so that most of the current will flow through this brush circuit.

To prevent any current at all from flowing through the bearings most manufacturers insulate them from the magneto frame with pressed paper or fibre insulation.

In both Figs. 48-A and B you will note that a grounding switch is used to shut off the magneto and ignition by short-circuiting the breaker points. When these points are short-circuited by the switch they cannot open the primary circuit any longer, and this prevents the sudden collapse of flux and the induction of high-voltage impulses in the secondary, thus stopping the spark.

This is a very effective method of shutting off the ignition to stop the engine and is much more convenient than trying to place a switch to open the primary circuit, as this circuit is all contained within the armature of the magneto itself.

The ignition switch in this case merely grounds the insulated breaker point, thus entirely shorting out the breaker contacts.

40. BREAKER MECHANISM

The breaker assembly of the armature-type magneto consists of five principal parts, as follows:

1. A circular metal breaker-plate which supports the contacts.
2. Contact points, one of which is attached to the breaker plate but insulated from it, and the other mounted on the grounded movable breaker arm.
3. Breaker housing.
4. Steel cams attached to the inside surface of the breaker housing.
5. Fastening screw which holds the breaker plate to the armature and also makes connection between the insulated breaker contact and the ungrounded end of the primary winding.

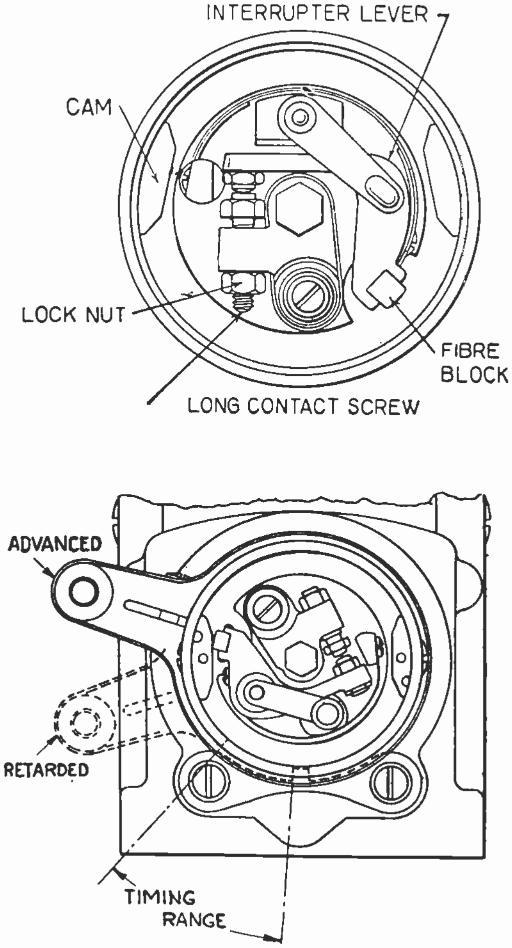

Fig. 49. The top view in this figure clearly shows the breaker mechanism of a magneto. Below is shown another view of a breaker with the points open and the cam under the breaker arm, and also showing the method of advance and retard of the spark by means of a lever on the breaker housing. Courtesy Bosch Magneto Corporation.

The upper view in Fig. 49 shows a diagram of the breaker mechanism of a mageto in which both the stationary and movable contacts can be seen. As the breaker plate and contacts are rotated the fibre block on the outer end of the arm rides over the cams attached to the inside of the breaker housing, thus causing the breaker points to open. When the fibre block drops off the cams the breaker points are closed by the action of a small spring attached to the movable arm.

Contact points are generally tipped with platinum as this metal stands up very well under the continuous sparking and make and break action and doesn't burn or corrode as easily as most other metals.

Magneto contacts are generally set for a maximum opening at .015 of an inch, although certain variations of this gap may be necessary with different magnetos under various operating conditions.

It is just as important to keep these contact surfaces bright and clean and properly fitted as it is with those of interrupters on battery ignition systems. **For efficient ignition, breaker contacts must make a good low-resistance closure in the primary circuit each time they touch, and must make a quick, clean break when they open.**

The lower view in Fig. 49 shows the manner in which the spark of a magneto can be advanced or retarded by shifting the breaker housing and cams by means of the advance lever attached to the side of the housing.

41. DISTRIBUTOR

Magneto distributors are quite similar to those used with battery ignition systems, except that instead of using a small distributor arm, magnetos use a distributor plate which is rotated by means of a gear that is driven from a small gear on the armature shaft.

Fig. 50 shows an end view of a magneto with the distributor cap removed to show the plate and gear. As this plate revolves its metal arm makes contact in rotation with the stationary contacts which are mounted in the cover and connect to the various spark plug leads. Below the distributor gear and plate in Fig. 50 can be seen the breaker housing with the cover removed, showing the breaker points and mechanism inside.

42. SETTING THE DISTRIBUTOR GEAR

In order that the rotating contact or segment will be at the correct position when the breaker contacts open, it is very important that the distributor gear

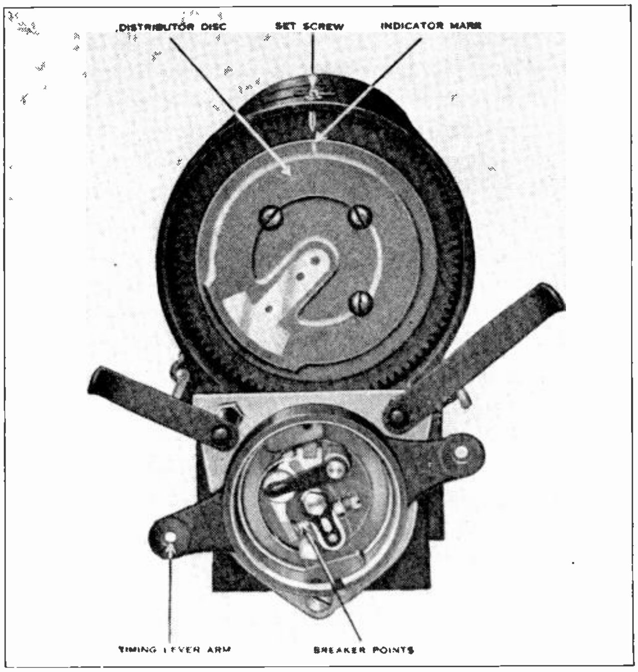

Fig. 50. Photograph of a magneto with covers removed showing the breaker mechanism below and the high voltage distributor disk and contact arm above. Courtesy Eisemann Magneto Corporation.

and its smaller driving gear on the end of the armature be properly meshed together. If these gears are not properly meshed it may result in the rotating brush or segment being at a point midway between the stationary segments when the spark occurs.

This would tend to make the spark jump the gap between the rotating and stationary contacts as well as the plug gap, and in all probability the increased resistance would result in the spark occuring at the safety gap of the magneto or at the wrong plugs of the engine.

To insure proper operation and make it easier to properly set and time the magneto in overhauling, manufacturers generally place small punch marks on the edges of the gears, one mark on the armature gear and two on the distributor gear, as shown in Fig. 51-A.

Magnetos are often arranged so that by making small changes they can be driven either clockwise or anticlockwise, according to the most convenient connection to the engine. If the magneto is for clockwise rotation, the C mark on the distributor gear should line up with the mark on the armature gear when meshing the gears together. If the magneto is to be driven anticlockwise, the A mark on the distributor gear should be lined up with the mark on the armature gear.

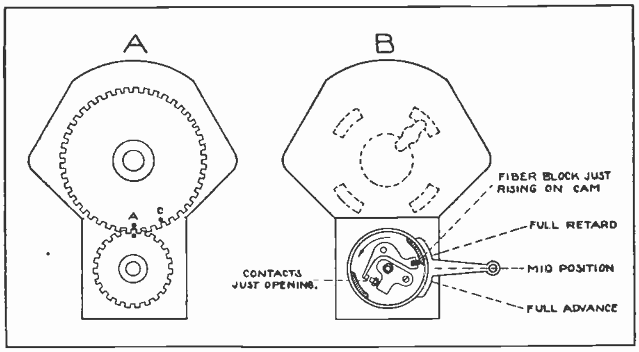

Fig. 51. A shows method of properly timing or setting the distributor gears by means of marks on their edges. B shows breaker arm in proper position, spark advance lever and breaker points both in proper position for timing the magneto.

The direction of magneto rotation is always designated as clockwise or anticlockwise when facing the drive end of the magneto. The direction of rotation for which the magneto is intended is generally marked by an arrow on the oil cover over the drive end bearing.

Sometimes a magneto is found which has already been overhauled several times and on which the original marks may have been obscured or scratched off, and other marks may have been made by the men who previously overhauled the magneto.

As these marks cannot be depended upon, the gears should be carefully meshed or set by the following procedure and as illustrated in Fig. 51-B. Set the breaker housing in mid position, half way between full advance and full retard. **Turn the magneto armature in the normal direction of rotation until the fibre block on the breaker arm is just moving up on the cam and opening the contacts. Then rotate the distributor gear to a point where the brush is in the middle of the segment, as shown.** Now, while making sure that the armature and distributor gear maintain these positions, move the gears into mesh with each other.

To check the setting move the breaker housing to the full retard position and, turning the magneto armature in the correct direction of rotation, see if the brush is still on the segment with the breaker contacts open. Make the same test with the breaker housing in the full advance position. The brush should be on the segment in both positions.

Magnetos are made with distributors for various numbers of cylinders, according to the types of engines they are to operate with. The upper view in Fig. 52 shows a complete wiring diagram of a magneto connected to the plugs of a four-cylinder engine, while the lower view in this figure shows another magneto connected to the plugs of a six-cylinder engine.

The arrangement of the distributor brushes and segments and also of the primary connections are slightly different in these two diagrams, but the circuits and principles are in general the same. In both diagrams the breaker contacts are shown in the circuits of the primary coils, and the high-voltage secondary circuit is shown leading from the collector ring through the brush to the distributor, and from the distributor contacts to the plugs, which in turn are grounded to complete the circuit back to the magneto frame.

The ground circuit and connections in each case are shown by the dotted lines. The wires leading

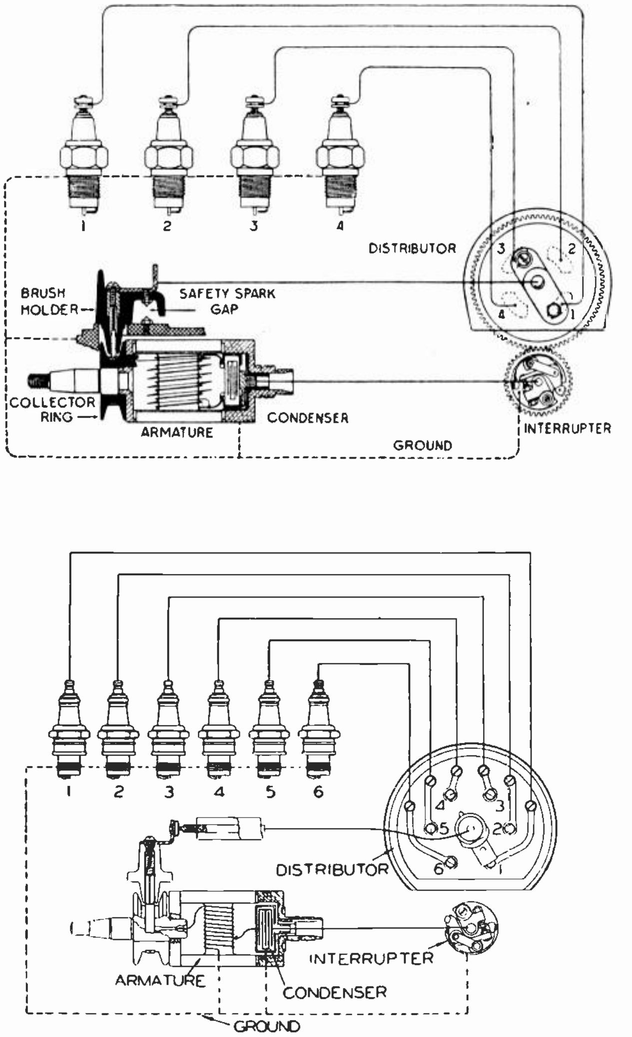

Fig. 52. The upper view shows complete primary and secondary circuits of a magneto with the high tension leads connected from the distributor to the spark plugs of a four-cylinder engine. The lower view shows the circuits of a magneto for use with six-cylinder engines. Note that the spark plugs are lined up numerically in these figures and are not in their proper order on the engine.

from the distributor terminals to the spark plugs in this figure are connected to the plugs according to their firing order, and the rows of plugs are arranged this way also and **not in their actual positions** on the engine.

43. TIMING A MAGNETO TO THE ENGINE

When connecting a new magneto to an engine or when reinstalling one that has been taken off for repairing or overhauling, the magneto should be carefully timed to the engine in the following manner, which you will note is very similar to the method used for battery ignition systems.

Set the engine so that No. 1 piston is at top dead center on the compression stroke. Fully retard the magneto breaker housing and turn the magneto armature in the normal direction of rotation until the distributor brush is on segment No. 1 of the distributor cap and the breaker contacts are just beginning to open.

Then connect the magneto to the engine through the drive coupling, being very careful not to allow the armature or distributor to change position while making the connection. Some magneto manufacturers place on the distributor disk or gear a mark which when lined up with a mark or screw on the distributor housing indicates that the distributor brush or rotating segment is in position to contact with the stationary segment which connects to No. 1 cylinder. These marks can be seen by referring to Fig. 50.

Fig. 53 shows a sectional view of one type of magneto, giving the names of the various parts. Examine each part very carefully and make sure that you understand the function of all of the important parts which have been explained in the preceding paragraphs.

You will note in this figure that the ground brush is located in the revolving breaker plate and rubs against the metal collar or frame of the magneto in the back of the breaker housing. In this position the brush not only makes a good return for the grounded secondary current, but also makes a positive ground connection from the rotating breaker mechanism to the magneto frame, to make more certain the shorting or grounding action of the ignition switch when the magneto is turned off.

The path of the high-tension energy can be traced from the upper right-hand end of the secondary coil to the collector ring, collector brush, up through the metal strip imbedded in the insulation of the distributor cap to the center distributor brush, across the rotating strip on the distributor disk, and out of the upper distributor brush to the spark plug wire. Only one of the outer brushes that connect to the spark plugs is shown in this view.

Fig. 54 shows another sectional view of a different type of magneto and, while the construction is different in some respects, you will note that the general arrangement and principles are the same. Note the position of the oil holes and the ground brush shown in this figure.

44. DISASSEMBLING MAGNETOS

The exact procedure for taking apart a magneto to make repairs or for overhauling will vary somewhat with different types of magnetos and detailed instructions for these can be obtained from the manufacturer of any certain magneto.

The following general rules, however, will prove to be very helpful and any magneto can be disassembled by this method with a little care and observation on the part of the workman so as not to overlook other small details.

First remove the breaker housing and distributor cap. Then remove the breaker plate by taking out the holding screw. Next remove in order the magnets, high-tension collector plug, high-tension pencil or conductor bar, ground brush, bearing plate at the interrupter end, distributor gear, and then the armature.

It is very important to remember that **the armature should be removed last,** for if this rule is **not**

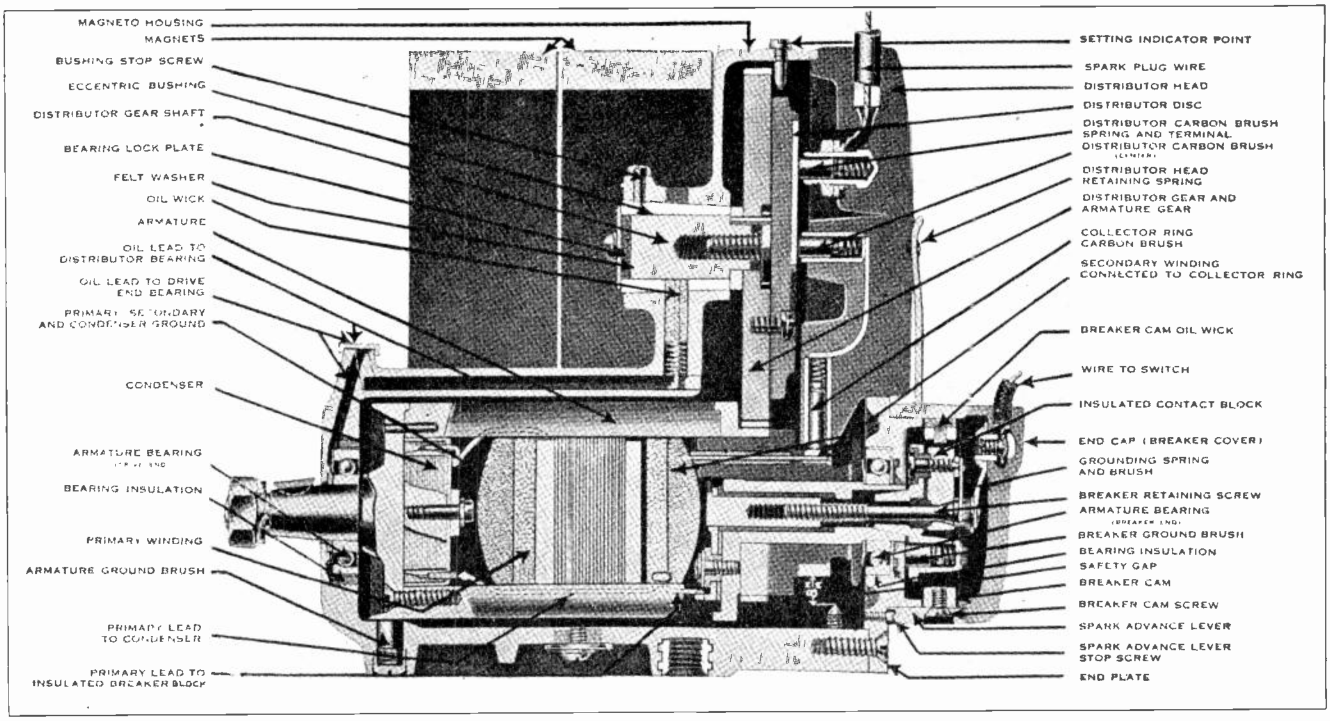

Fig. 53. This excellent sectional view of a magneto shows the arrangement and names of all the important parts. Examine each part very carefully and compare with instruction describing various magneto parts. Courtesy Eisemann Magneto Corp.

followed it may result in cracked collector ring insulation and broken ground brushes.

To reassemble the magneto follow the same procedure in the reverse order. Extreme care should be used not to batter, scratch, or damage any of the finely machined metal parts and not to crack or injure the molded insulation.

When removing field magnets their magnetic circuits should be kept closed by slipping an iron bar or keeper across the pole ends before completely removing them from the pole shoes. This bar should be left on the field magnets as long as they are off the magneto, in order to prevent weakening the poles, which will occur if the magnetic circuit is broken and left open.

Magneto magnets can be easily recharged by means of a powerful electro-magnet operated from a storage battery or other source of D.C. When fully magnetized the average magneto magnet should lift about 20 lbs.

In replacing these magnets be careful to get all like poles on one side. It doesn't matter which side the north or south poles are on as long as all north poles are kept together and south poles together. If some of the poles are reversed the magnetic flux will short directly between adjacent poles and will not pass across the armature gap between the pole pieces. This results in no field or a very weak field across the coils and practically no induction or spark.

Like poles can easily be determined by holding the magnets side by side or end to end in a position so that their poles tend to repel.

Field magnets should not be banged around or handled roughly when they are off the magneto, as such treatment causes them to lose their charge. The armature should also be very carefully handled in order not to damage the insulation on the coils or harm the bearings.

On some magnetos when the distributor gear and shaft are put back in place the end of the shaft may catch upon an oil wick in the lower side of its bearing. This wick can be held down with the end of a screw driver or other slender metal tool inserted in the back end of the bearings while the shaft is pushed in the front end.

45. MAGNETO TROUBLES AND CARE. RECHARGING FIELD MAGNETS

Some of the common magneto troubles which may be the cause of an engine missing or starting hard, or complete failure of the ignition system, are as follows:

When the field magnets become weak it will cause very poor sparks at low engine speeds and make the engine start hard. The magnets should be removed as previously explained and recharged by holding or rubbing their poles in contact with the poles of a powerful electro-magnet.

Regular magnet chargers can be purchased for this work or a very effective charger can be made by winding about 500 turns of No. 14 magnet wire on each of two soft iron cores about two or three inches in diameter and six inches long and bolting the bottom ends of these cores securely to a soft iron plate to form a keeper for a closed magnetic circuit across their ends. See Fig. 55.

With these coils connected in series in a manner to create unlike poles at the top ends of the electro-

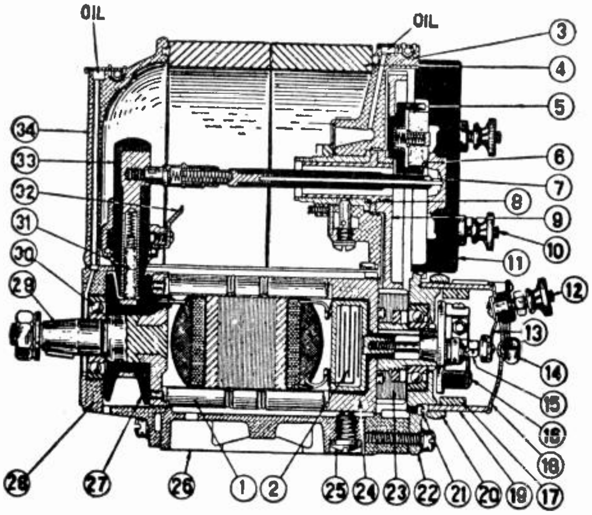

1. Armature wound core
NOTE: Complete armature consists of parts indicated by the following numbers: 29, 1, 2, 24 and 27.
2. Condenser
3. Gear housing
4. Magnet
5. Distributor brush holder
6. Distributor brush
7. Conducting bar
8. Distributor gear bearing
9. Distributor gear
10. Distributor plate terminal screw
11. Distributor plate
12. End cap terminal nut
13. End cap contact spring with brush
14. End cap holding post and spring
15. Interrupter fastening screw
16. Interrupter complete
17. Interrupter cam
18. Magneto end cap
19. Interrupter housing
20. Timing arm
21. Interrupter housing stop screw
22. Rear end plate
23. Armature gear
24. Armature flange—condenser end
25. Grounding brush with holding screw
26. Base plate
27. Collector ring
28. Shaft end plate
29. Driving shaft and flange
30. Ball bearing—either end
31. Collector brush
32. Safety gap electrode
33. Collector brush holder
34. Waterproof hood

NOTE: The numbers given above are for reference only. Do not use these reference numbers when ordering parts.

Fig. 54. Diagram showing sectional view and names of important parts of a magneto of somewhat different type than the one shown in Fig. 53. Courtesy Bosch Magneto Corporation.

magnet and then connected to a six-volt storage battery, a very powerful magnetic field will be set up across the open pole ends.

For added convenience these ends can also have small square pieces of soft iron bolted to them, in order to make a broader surface for the ends of the horseshoe magnets to contact with. If the inner edges of these pole pieces are made 1 to 1½ inches apart and the outer edges from 7 to 8 inches apart, they will accommodate almost any of the ordinary sized magneto magnets.

Care should be taken to place the horseshoe magnet on the charging magnet in the proper position to strengthen the poles it already has, rather than to reverse them and build them up in the opposite direction. The proper polarity can easily be determined by suspending the horseshoe magnet above the electro-magnet when the current is turned on. If the horseshoe magnet is free to turn its poles will be attracted to the proper poles of the electro-magnet.

The charging magnet should be bolted to a bench in a vertical position so that the horseshoe magnet can be rubbed or rocked across the ends of the electro-magnet poles for several seconds with the current turned on.

When removing the magneto magnets from the charger always remember to place the iron keeper or bars across their ends first. A fully-charged magnet should pull about 20 lbs. on an iron bar attached to a small spring scale, as previously mentioned.

During the test and after the magnet poles are in contact with the scale bar, the temporary keeper bar should be removed in order to get maximum pull. It should, however, be placed on the magneto magnet again before removing it from the scale to replace it on the magneto, otherwise a great deal of the charge will be lost.

46. BREAKER TROUBLES

If the breaker points on a magneto are set too close or if they are dirty and not making a good contact, it will probably cause the engine to miss, particularly at low speeds. By means of a thin gauge obtainable for this purpose the breaker points should be kept set to open the proper distance. As previously stated, the maximum gap or opening between these points should be about .014 or .015 of an inch.

The contact surfaces should be kept clean and bright and should meet squarely when they are closed. If the platinum tips or surfaces of the breaker points have been burned off or filed off, the points should be replaced with new ones, because efficient operation cannot be obtained with points that are badly burned or those that have had the contact metal ground away.

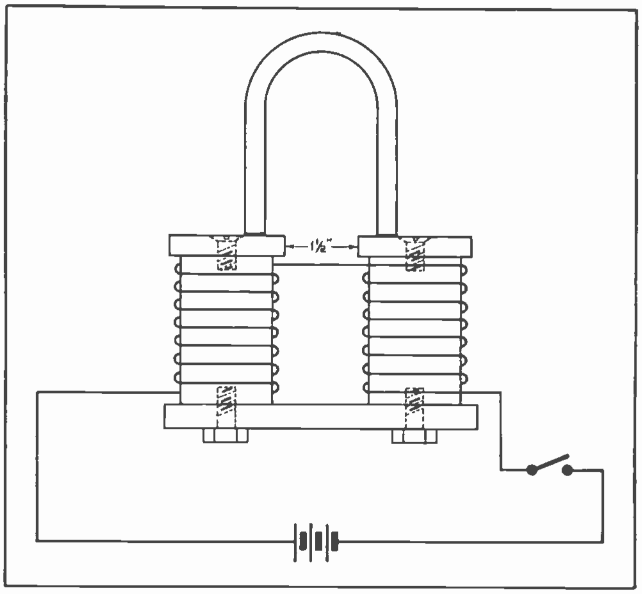

Fig. 55. This sketch shows the method of constructing a simple electro-magnet for recharging field magnets of magnetos.

If the points are only slightly burned or blackened they can be dressed off with fine sandpaper drawn between the contacts when they are pressed lightly together. They can also be dressed or resurfaced with a fine breaker-point file. These files should be carefully used because if not they can do more harm than good.

One should never hold the file rigidly in the hand or attempt to file one contact at a time. Instead, the file should be held between the contacts by pressing them lightly together against the file surfaces. Then draw the file easily back and forth, always allowing its surfaces to align with those of the contacts which are pressed against it.

Sometimes the stationary contact becomes loose or the pivot of the movable arm becomes worn or loose, and either of these will result in faulty ignition. When found in this condition they should be tightened or replaced.

If the spring tension on the movable breaker arm becomes weak or if this arm is allowed to bind on its pivot, the engine will miss at high speed. The correct tension on the breaker arm should be approximately 16 ounces when the contacts are closed. A temporary repair or increase in spring tension may be effected by bending the spring or shortening it until a new one can be obtained.

47. CONDENSER, ARMATURE, SLIP RING, AND DISTRIBUTOR TROUBLES

An open-circuited condenser will generally cause excessive arcing and severe burning of the contacts and greatly reduce the high-tension spark. If the condenser is shorted it will also prevent the magneto operating, because it shorts out the breaker contacts and prevents the opening of the primary circuit.

The only remedy for a condenser that is actually open or grounded inside is to replace it with a new one. A ground in the armature windings due to defective insulation may result in weak ignition and missing, or in complete failure of the engine. Unless the trouble is right in one of the leads or connections of the coils, the best remedy is to replace the magneto armature with a new one.

If the insulating rings or material on each side of the collector ring become oily and dirty it will allow the high voltage to creep over the surface and to ground. In such cases the rings should be carefully washed with gasoline and well dried before being put back in service.

These rings or insulating barriers sometimes become cracked or punctured and in some cases must be replaced with new ones. To remove a damaged ring, first pull the inner bearing race off the armature shaft. Then stand the armature on end with the collector ring down and apply a little alcohol to dissolve the varnish which cements the secondary lead to the ring. Be careful not to drop any alcohol on the winding insulation, as it will ruin it.

When the varnish is soft the secondary lead can easily be removed, after which the ring is pulled off the shaft with a special puller. If such a puller is not available expand the ring by immersing it in hot water, after which it can generally be tapped off with a hammer or sometimes pulled off by hand.

Distributor plates and caps sometimes become dirty or carbonized and should then be carefully washed out with gasoline and dried with a clean cloth. Never use sandpaper to clean blackened surfaces of the distributor plate, as this roughens the surface and makes it collect additional dirt much more rapidly.

The magneto ground brush should always make good contact with the rotating armature, and if it doesn't the armature should be cleaned and a new brush installed when necessary.

Some of the other faults which may cause defective magneto operation and for which the remedies can be clearly seen are: Wrong timing, wrong breaker plate, incorrect meshing of armature and distributor gears, cracked distributor cap, broken distributor brush, worn bearings, wrong direction of rotation of armature, etc.

Magnetos are supposed to operate in one direction only, but the direction of rotation can be reversed if necessary in many magnetos by changing the breaker plate for one made for opposite rotation and resetting the meshing of the armature and distributor gears as previously explained.

It is a good plan to check and clean the distributor and interrupter mechanisms of magnetos and readjust the breaker points after every 1000 miles of operation on trucks and busses, or after every 100 hours of operation on tractors and stationary engines.

Cleaning and adjustment are required more often than this on aeroplane engines where the ignition is extremely important.

At these intervals the magnetos should also receive one or two drops of good light machine oil in each of the oil openings. Be very careful not to oil them excessively because too much oil is very often the cause of magneto trouble due to damaged insulation or collection of excessive dirt.

48. STARTING MOTORS

One of the greatest conveniences provided by electricity on the modern automobile is the electric starter which eliminates the necessity of cranking the engine by hand as with former types of cars. The electric starter which turns the engine over at a mere touch of the starting switch is so much quicker, safer, and more convenient that everyone wants their starter to be in good condition at all times.

Electric starters are very rugged and simple devices, and do not often get out of order, but there are a few simple faults which do occasionally occur that interfere with their proper operation. These troubles can be easily corrected by an experienced service man.

As it requires considerable torque to turn the automobile engine over rapidly when starting, and particularly when the oil is cold and stiff, series motors are used for this work. You have already learned that series motors have an excellent starting torque characteristic. The series D.C. motors used for automobile starters are constructed and operated on the same general principles as those you have already covered in the D.C. Power Sections of this Set.

The principal difference between power motors and those used for starting automobiles is that the automobile starting motor is smaller and is designed for operation on 6 or 12 volts.

Fig. 56 shows a starting motor with the brushes and a commutator on the right end and the driving pinion that meshes with the flywheel gear of the engine on the left end.

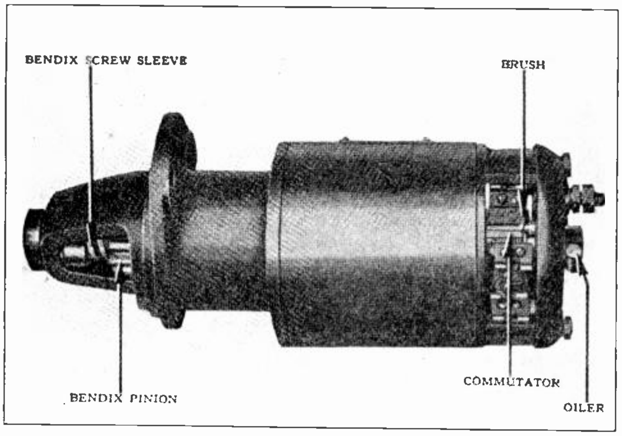

Fig. 56. Photo of common type of automobile starting motor, the commutator and brushes shown on the right and driving pinion on the left.

Fig. 57 shows the location of the starting motor mounted on the engine near the right-hand end, near the flywheel. In this view you will note that the starting motor housing is bolted securely to the flywheel housing. The shaft and driving pinion of the starting motor project through into the flywheel housing to mesh with the teeth of the flywheel gear and turn the engine over when the starting motor switch is closed. The switch in this case is mounted on top of the starting motor where it is operated by a small lever and a pedal which projects through the floorboard of the car.

Starting motors consist of the following principal parts:

1. Cylindrical field frame.
2. Armature.
3. Brushes and brush rigging.
4. End plates in which the bearings are supported.
5. Mechanism used to connect and disconnect the motor armature to the engine flywheel.

As starting motors operate on very low voltage and require heavy currents, both their armatures and fields are wound with very heavy conductors, generally in the form of copper bars or strips. This makes their construction very rugged and tends to eliminate troubles due to short circuits, grounds, and defective insulation which occur more frequently with smaller insulated wires.

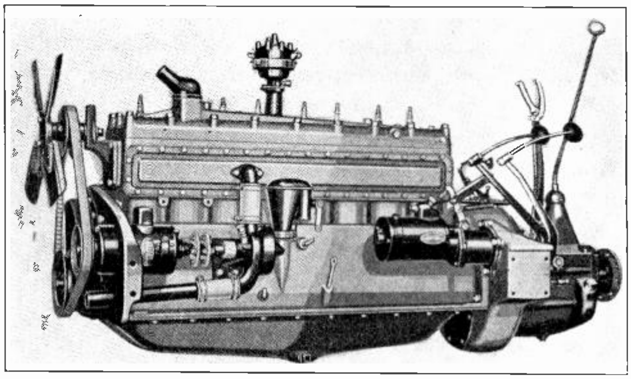

Fig. 57. Side view of an eight-cylinder Studebaker engine showing location of starting motor attached to the flywheel housing on the right.

The commutator and brushes of starting motors, however, are necessarily rather small and are sometimes sources of trouble on account of the very heavy currents they are required to carry.

Starting motors are made to develop from approximately one-half to one horse power, according to the size of the automobile engine they are to operate. At six volts this results in very heavy operating currents ranging from 100 to 200 amperes when the starter is turning the engine over at about 125 RPM.

During the first instant of operation, however, when the starter is just getting the engine in motion starting currents may run as high as 400 or 500 amperes for a fraction of a second.

From this we can see the necessity of having tight connections and a good low-resistance circuit from the battery to the starter, and through the brushes and windings of the starter itself.

Fig. 58 shows a simple circuit-diagram of the field and armature connections of a series starting motor of the four-pole type. You will note that the motor only has one connection terminal, which is

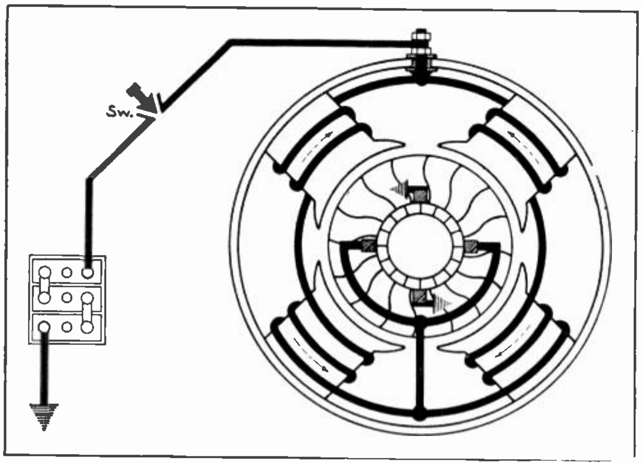

Fig. 58. Diagram showing connections of series wound automobile starting motor. Carefully trace the circuit from the battery through the switch, field coils, armature, and from the grounded brushes back to the battery.

insulated from the frame and feeds the battery current through the field coils and armature in series. Two of the brushes are grounded, thus giving the armature current its return to the other side of the battery, which is also grounded.

The upper view in Fig. 59 shows the commutator end of a starting motor with the cover and brush-holder mechanism removed. Note the arrangement of the brushes, one set of which is grounded to the metal cover, and also note the heavy armature bar conductors attached to the commutator. The large leads projecting from the field frame are those of the series field coils. The insulated connection terminal by means of which the heavy starter cable is attached to the motor can be seen on the lower left corner of the field frame.

In the lower view the opposite end of the starter is shown, and the heavy armature conductors can again be seen projecting from the frame. This view also shows the special pinion and coupling arrangement by which the starting motor is connected to the engine flywheel.

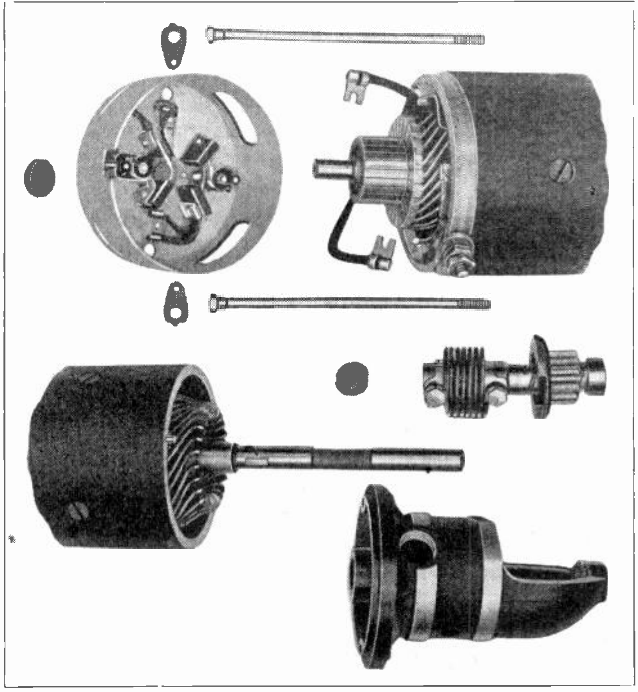

Fig. 59. Disassembled view of a starting motor showing commutator end and brushes above, and drive end with Bendix drive and pinion below.

49. BENDIX DRIVE FOR STARTERS

When the electric starter on an automobile is brought into use it must momentarily connect with the engine flywheel in order to turn the engine, but as soon as the engine is started and running under its own power, the starter must be immediately disconnected, or it would otherwise be driven at an excessive speed, because of the high gear ratio between the starter and the engine flywheel.

This gear ratio is generally about 15 to 1 and enables the starter to crank the engine at a speed of about 125 RPM. When the engine is running under its own power, however, the normal speed will range from 500 to 3500 RPM, which you can readily see would drive the starter at a terrific rate if it were left connected to the flywheel.

To avoid this requires some form of device which will automatically and reliably connect the starting motor to the engine flywheel when it is desired to start the engine, and quickly disconnect it as soon as the engine begins to run under its own power.

One of the most popular arrangements developed for this purpose is known as the **Bendix drive,** which is shown in Fig. 60. This device connects to the end of the starter armature and consists of a coarsely threaded sleeve mounted on the end of the armature shaft, a small gear or pinion which has threads cut in its inner surface to correspond with those on the sleeve over which the pinion fits, a strong coil spring, and the necessary studs to attach the assembly to the drive head.

Fig. 61 shows a sectional view photo of a starting motor with the Bendix drive attached to its armature. Keep in mind that the drive head or left end of this Bendix drive is rigidly attached to the armature shaft and the rest of the assembly is driven through the coil spring.

When current is sent through the motor by pressing the starter switch, the armature almost immediately goes up to a speed of about 4,000 r.p.m. As the small gear has a certain amount of weight its inertia, tends to prevent its accelerating with the

Fig. 60. Photograph view of Bendix drive mechanism showing spring, sleeve, and pinion.

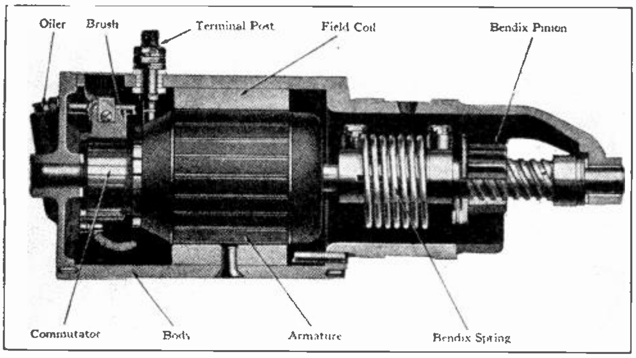

Fig. 61. Sectional view of an automobile starting motor showing commutator and brushes on the left and Bendix drive on the right. Examine this figure carefully while reading the explaining paragraphs.

motor, and as it is loose on the threaded sleeve it tends to turn slower than the sleeve, which causes the threads to force it outward to engage the teeth of the flywheel. The coil spring then absorbs the shock as the motor starts to crank the engine.

As soon as the engine starts to run under its own power the speed of the flywheel tends to exceed that of the starter gear and causes it to revolve faster than the drive sleeve, so that the threads force the gear back toward the starting motor and out of mesh with the flywheel teeth.

To avoid the possibility of the small pinion or gear revolving and creeping along the threaded sleeve due to car vibration and thus possibly engaging the flywheel when the engine is running, the gear has attached to it a flange one side of which is much heavier than the other. This heavy side tends to hang downward and prevents the gear from revolving except when the starting motor operates it.

In addition to this weighted flange, an added precaution is provided in the form of a small stop pin which can be seen in the lower edge of the flange in Fig. 61.

When the pinion gear is thrown to the idle position this little pin is forced by a light spring into a shallow groove in the driving head, thus holding the gear in this retarded position.

Two of the great advantages of the Bendix drive are its very simple construction and the fact that it allows the starting motor to come up to full speed before connecting it to the engine, thus giving the motor a tremendous "break away" or initial starting torque to crank the engine.

50. MANUAL PINION SHIFTS

Another method that is quite commonly used for engaging the starter pinion with the flywheel gear is known as the **manual shift.** With this system the pinion is attached to the starter pedal by a lever arrangement which, during the first downward movement of the starter pedal shoves the pinion into mesh with the flywheel gear.

Further movement of the pedal operates the starter switch, starting the motor and cranking the engine. Just as soon as the engine starts the foot should be removed from the pedal to allow the strong spring which returns the pedal to normal position to also withdraw the pinion from the flywheel gear.

Starters of this type generally also have in the pinion a form of slipping clutch arrangement which will prevent the motor from rotating at excessive speeds in case the pinion should stick or jam in the meshed position when the engine starts.

Fig. 62 shows a starter with the manual-type shift mounted on the transmission of an engine and with a section of the flywheel casing cut away to show the manner in which the gears are meshed. Note attached to the starter pedal the lever which first moves the small gear into place and then presses the starter switch, which is located on top of the motor.

Fig. 63 shows a starting switch of the foot-operated type for mounting in the floorboard of the car. The connections from the battery to the starting switch, and also from the starting switch to the terminal of the starting motor, are made with heavy stranded copper cable which is equipped with soldered lugs to secure low-resistance connections to the battery, switch, and motor terminals.

It is very important to see that the lugs of this starter cable are well soldered to the conductor, and that they are securely tightened to all terminal connections. When you consider that it is necessary for the 6-volt battery to send several hundred amperes through this circuit, you can readily see that the slightest amount of looseness in these terminal connections, or even a thin layer of dirt or corrosion at such terminals, would create enough resistance to greatly interfere with efficient starter operation. Even a small fraction of an ohm would cause too much voltage drop at the starter. For example, 1/50 of an ohm in a circuit carrying 200 amperes would cause a voltage drop of 1/50 x 200, or

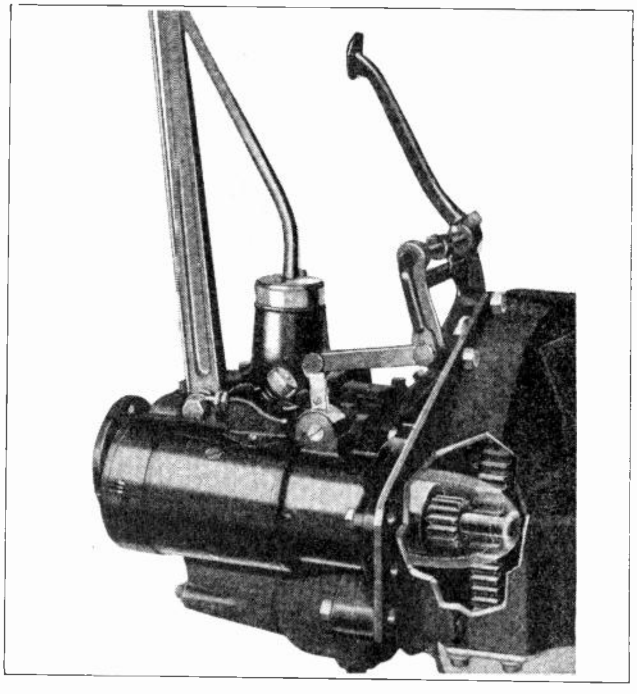

Fig. 62. This view shows method of meshing the starter pinion with the flywheel gear by means of the starter pedal which operates both the gear and starter switch.

4 volts, thus leaving only 2 volts effective pressure at the starter brushes.

For this same reason it is very important to keep the contacts of the starting switch clean and in good condition and the switch properly operating, to avoid unnecessary resistance at this point. These contacts sometimes become burned and pitted, due to making and breaking the heavy current circuit, and they then require scraping and polishing to provide a bright, new surface.

51. STARTER TROUBLES AND REMEDIES

Because of the very rugged electrical construction of starting motors, troubles of an electrical nature are not very often encountered within the motor itself. In most cases electrical troubles will be found to be at the commutator, brushes, brush holders, or leads. This fact should be kept well in mind by the trouble shooter or ignition service man.

When the starting motor gives trouble, it is generally in the form of low cranking torque or complete failure of the motor. It should be kept in mind that satisfactory operation of the starter depends not only on the condition of the motor itself, but also on the condition of the battery, connecting cables, and starter switch, and one should carefully check each of these items before spending the time necessary to remove the starting motor for thorough inspection or overhauling.

52. LOW VOLTAGE AT STARTING MOTOR

If the starting motor fails to crank the engine properly, a good test to determine the cause of the trouble is to switch on the lights and press the starter pedal. If the lights are extinguished when the starter switch is closed, the trouble is generally due to a loose or dirty connection in the starter circuit. Carefully check the battery terminals, cell connectors, and ground connection.

To help locate the trouble, hold the starter switch closed for about one-half a minute and this will cause the loose connection to heat up so that it can be readily located by feeling along the different parts of the circuit with the hand.

If the lights gradually dim down and go out when the starter switch is closed, this generally indicates a dead battery. The battery should be removed from the car and tested with a high rate discharge test, which will be explained later in the Battery Section.

53. MECHANICAL TROUBLES

If, when the starter switch is closed, the lights dim slightly, but do not go out, it generally indicates mechanical trouble, which may be either in the engine or the starter and is causing an overload on the starting motor. Crank the engine by hand to see if it is unusually tight, as might be the result of cold, heavy oil, tight bearings, etc.

Sometimes the starter pinion becomes jammed or locked just as it starts to mesh with the flywheel gear. The pinion can usually be released by putting the car in high gear and rocking it back and forth to disengage the pinion. If none of these troubles seem to be present, then remove the starting motor and check it for a bent armature shaft or loose bearings.

Sometimes the starter may stick because of loose bearings which allow the armature to rub the pole pieces and lock magnetically when current is applied.

If, when the starter switch is pressed, the lights do not dim at all, there is probably an open somewhere in the starter circuit. This trouble will generally be found at the starter switch or at a loose cable connection, or sometimes at brushes stuck in the brush holders so that they do not rest upon the commutator. An extremely dirty commutator or brushes may also give this indication.

If the starting motor operates and spins at high speed without cranking the engine, it may be due to hardened or gummed oil on the Bendix sleeve which prevents the pinion from traveling into mesh with the flywheel gear. Washing off the threaded sleeve and parts with a brush and gasoline will generally cure this trouble.

Sometimes the Bendix spring or studs become broken or there may be several teeth broken out of the flywheel, thus preventing the starter pinion from meshing at a certain point. If the starter uses a manual pinion shift, check carefully for disconnections or excessive play in the pedal rods or levers.

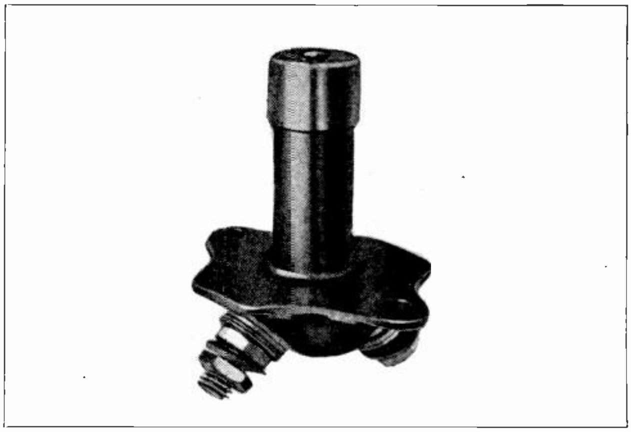

Fig. 63. Starter switch for mounting on the floorboard and connecting in series with the lead from the battery to the starting motor.

If, when the starter is operated. a loud clashing or banging noise occurs when the pinion meshes with the flywheel, check the bolts that hold the starter to the flywheel housing to see that they are tight. If this doesn't remedy the trouble, move the starter and examine the teeth on the flywheel gear.

The edges of the teeth on both the flywheel and pinion gears are beveled to allow them to engage with each other easily. If these teeth are badly burred, due to rotating with only the entering edges meshed, noisy starter operation will result. This condition can only be remedied by replacing the gears.

Burred teeth are generally caused by improper alignment of the pinion, which may be due to a bent armature shaft, worn starter bearings, or loose starter. Clashing may also be caused at times by the threaded Bendix sleeve sticking or "freezing" to the armature shaft, and thus preventing the slight lateral movement which is necessary for silent gear meshing.

To correct this trouble, the Bendix drive should be removed and disassembled and the armature shaft carefully polished with fine emery cloth. Any rust should also be removed from the inside of the Bendix sleeve. Then apply a little light oil and reassemble.

When the starting motor cranks the engine very slowly, the trouble may be due to short circuits or high-resistance connections in the motor, or loose connections and high resistance at the starter switch or cable. If the switch gets hot, remove it and look for burned contacts. Also inspect the switch for possible defects in the insulation. Examine the starter cable carefully for loose connections or for damaged insulation where it rubs against the car frame and may have become grounded.

The starting motor should be carefully checked for poor brush contact, weak brush-spring tension, dirty commutator or brushes, or unsoldered field or armature connections.

If the trouble is still not located, the armature, field, and brushes can be tested for grounds. A weak battery may also cause the starter to crank the engine very slowly.

53. ELECTRICAL AND MECHANICAL TROUBLES IN MOTOR

If no trouble can be located at the battery, starting switch, or cable and there appears to be electrical trouble within the starting motor, it should be taken apart and carefully examined for both mechanical and electrical defects, such as the following:

Armature rubbing on the pole shoes, worn bearings, bent shaft, broken brushes or brushes stuck in the brush holders, loose connections to the brushes or field coils, grounded cable terminal, poor brush-spring tension, loose connections between commutator bars and armature leads due to solder having been melted and thrown out of the commutator risers, high resistance in the field circuit caused by solder melting and running out of the joints between field coils, etc.

Always remember that anything that increases the resistance of the motor or its circuit will greatly decrease its torque. The mistake that is sometimes made by inexperienced or untrained automobile service men is that of replacing worn starter brushes with brushes of the wrong grade or material.

In order to be of sufficiently low resistance, the brushes for starting motors are made of carbon and powdered copper, the copper content being the greater portion of the material used in these brushes. If these brushes are replaced with ordinary carbon or carbon graphite brushes, their resistance will be altogether too high for use on such heavy currents at low voltage.

Sometimes wrong brushes of this type become red-hot when the starting motor circuit is closed, but they will not allow enough current to flow to start the engine.

You are already familiar with the methods of testing field coils or armature windings for grounds, shorts, opens, etc., as covered in the Sections on Armature Winding and Motor Repairs.

An ordinary 110-volt test lamp can be used very conveniently for checking for these faults on starting motors. The brush holders should also be checked to see that those which are supposed to be insulated have not become grounded to the starting motor frame.

After a starting motor has been repaired and overhauled it can be thoroughly tested before it is replaced on the car by means of a regular garage test bench such as is used in most medium and large-sized garages or automotive electrical service stations.

On these benches the starting motor is securely clamped in a special vise and a spring scale and lever arrangement are attached to the shaft to measure its torque when battery voltage is applied.

While in the Automotive Department of your shop course, be sure to get plenty of actual practice in overhauling, repairing, and testing starting motors, and in the use of test bench equipment.

54. AUTOMOTIVE GENERATORS

As stated in an earlier article in this section, the generator is a very important piece of the electrical equipment on a modern automobile. With the extensive use of electric current for lights, ignition, horn, starting motor, and various other purposes, any ordinary-sized battery would soon become discharged if there were no means for supplying it with current.

The length of the battery discharge could, of course, be prolonged by using batteries of larger sizes, but as this would add considerable weight and additional expense, it is much more practical to equip each car with a small low-voltage D. C. generator to keep the battery charged, and also to supply the current for various uses and prevent drain on the battery when the engine is running at normal speed.

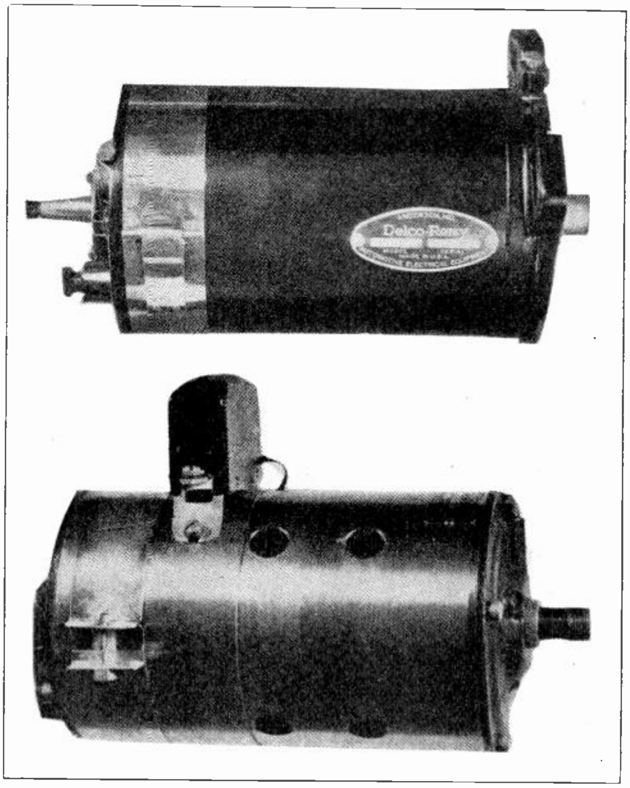

Fig. 64. Photograph views of two types of automobile generators. Note the metal band on the left end of each generator which can be removed for access to the brushes and commutator. Also note the cut-out mounted on top of the generator.

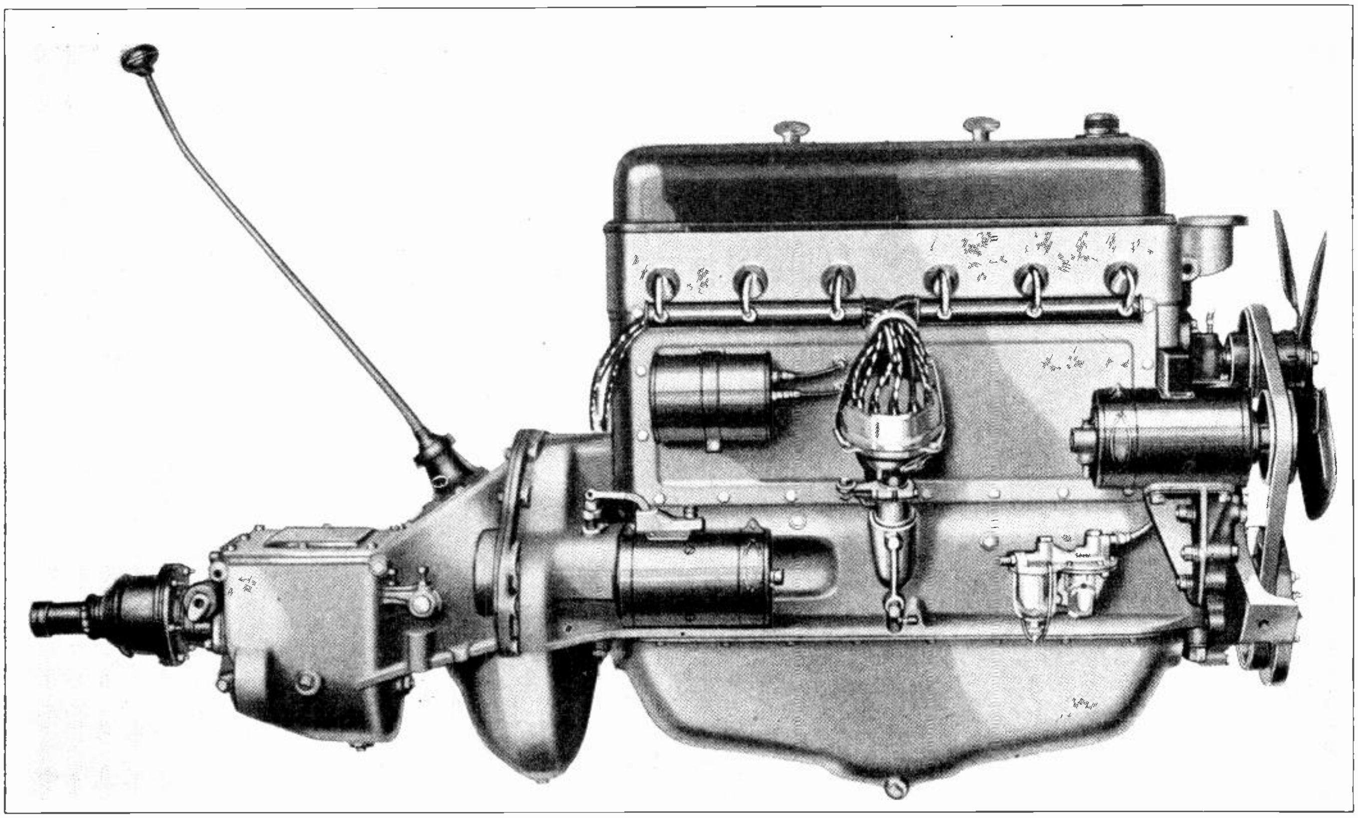

Fig. 65. Side view of a six-cylinder Nash engine showing the location of the starting motor, generator, double ignition distributor, and fuel pump. Note the generator driving belt which drives both the generator and fan.

For this purpose a small shunt-wound D. C. generator is connected to the engine by means of a chain, belt, or gear, and is driven at a speed of about one and a half times engine speed, producing from 6 to 8 volts within the normal speed range of the engine.

Fig. 64 shows two very common types of automobile generators, and Fig. 65 shows a generator attached to a bracket and mounted upon the engine at the right-hand end. In this figure you will note the 'V" belt used to drive the generator and fan.

The general construction and operating principles of D. C. generators have been thoroughly covered in the previous section on D. C. power equipment, and the principles of automobile generators are very much the same. Because of the peculiar conditions under which they operate, however, there are certain special features in their design that are very important and interesting to consider.

For example, a generator must be capable of rotating at very high speeds without injury, as it may often be revolved at speeds of 6,000 r.p.m. or over. Another special feature is the very interesting voltage control, which has been developed to enable the generator to produce high enough voltage to charge the battery and supply current when the car is operating at comparatively low speeds and yet prevent the generator from developing excessive voltage and charging currents at high speeds. When we consider that it is desired to have the generator commence charging the battery at a speed of about 12 miles per hour and yet not charge excessively or develop too high voltage at speeds of even 60 or 70 miles an hour, this voltage regulation is quite an accomplishment.

Another feature of the automobile generator is the convenient means provided for adjusting or changing the charging rate so that it can be set to suit various driving conditions.

55. THIRD BRUSH REGULATION

One of the most commonly used and popular types of automobile generators which fulfills the above requirements is known as the "third brush" type, because it uses a small third or auxiliary brush to regulate the voltage at different speeds.

This brush is connected to one end of the field winding and is placed in such a position on the commutator that it tends to decrease the field voltage and current when the generator speed increases, and so prevents the armature voltage and current from rising above the limit for which the brush is set.

The location and connection of this third brush is shown in Fig. 66.

You have already learned in an earlier section on D. C. motors and generators that when the armature windings are carrying current there is set up around them a strong magnetic field which tends to distort the lines from the field poles, and cause the pole flux to shift around the pole faces in the direction of rotation. This armature reaction results in weakening the flux at one pole tip and strengthening it at the other, as shown at Fig. 66.

In this diagram the coils A to G are under one field pole and will have generated in them a voltage propor-

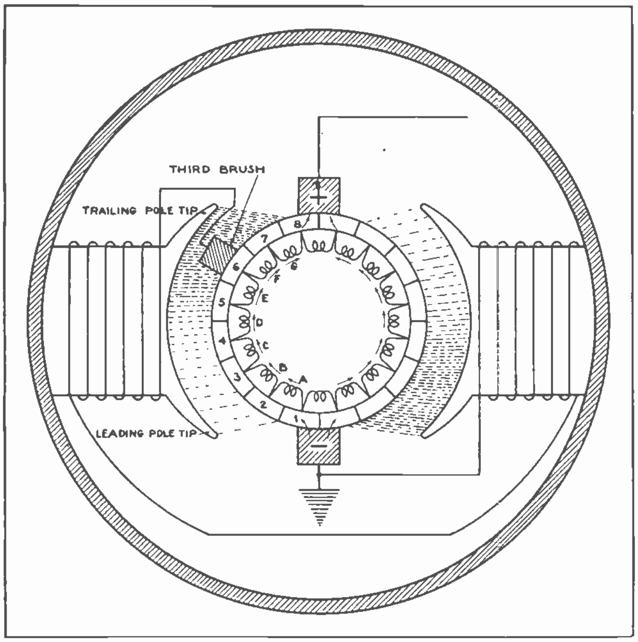

Fig. 66. Diagram showing the armature reaction, field distortion, and principles of third brush voltage regulation on an automobile generator.

tional to the speed at which they are rotated and to the strength of the magnetic field of the generator. Assuming that each coil generates 1 volt, the voltage between adjacent commutator bars will be 1 volt; and the voltage between the main brushes will be the sum of the voltages generated in the separate coils in one side of the winding, or in this case 7 volts.

Note that the two sides of the armature winding form two parallel paths from the negative to positive brush. With a pressure of 1 volt between bars, the voltage applied to the field coils which are connected between the negative brush and third brush will be 5 volts.

This voltage doesn't remain constant, but varies with the shifting of the field flux due to the change of current load in the armature conductors. For example, if the armature develops a certain voltage and delivers a current of 10 amperes at a speed of about 1,800 r.p.m., then if the speed is increased the voltage and current will tend to increase.

A slight increase in the armature current increases the field distortion, moving the more dense field flux farther toward the pole tips. This weakens the field through which coils A, B, C, D, and E are moving thus reducing the voltage applied to the field, cutting down the total generator field strength, and tending to prevent the voltage at the main brushes from rising in proportion with the increase of speed.

In actual practice this third brush method of voltage regulation allows the charging rate to gradually increase up to generator speeds of about 1,800 r.p.m., at which point the correct relation between armature current and field voltage is obtained. From this point the charging rate gradually falls off as the speed is increased above this limit. This is generally a desirable feature, particularly in the summer time, when the car may often be operated for long periods at high speeds, as it protects the battery from being overcharged and the generator from overheating.

As the voltage applied to the field varies immediately with any change of generator speed and armature current, resulting in a change of field distortion, this regulation is entirely automatic and maintains a fairly steady voltage even with sudden variations in the engine speed.

56. ADJUSTING CHARGING RATE

To adjust the charging rate of a generator of this type, all that is necessary is to slightly shift the position of the third brush on the commutator to include more or less bars between it and the negative brush.

You can readily see that if the third brush in Fig. 66 were shifted farther to the right it would include more armature coils in the field circuit and supply higher voltage to the field, thus causing the generator to develop higher armature voltage at the main brushes and increase the charging rate.

On the other hand, if the brush were shifted to the left to cut out part of the winding between it and the negative brush, there would be less voltage applied to the field coils, and the generator voltage and charging rate would be decreased.

The third brush is generally arranged with a set screw which normally holds it securely in one position, but which can be loosened to allow the brush to be shifted, either by lightly tapping against the holder with a screwdriver or by the adjustment of an auxiliary shifting screw. This provides a convenient method of increasing the charging rate during winter months when the engine starts hard, due to cold, stiff oil and therefore requires considerably more starting current. This is also the season when the daylight hours are

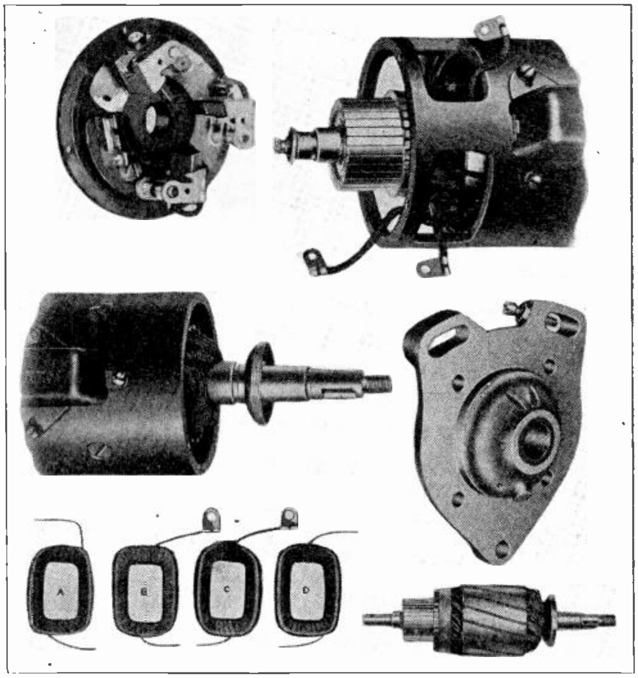

Fig. 67. Disassembled view of an automobile generator showing commutator and brushes above, drive end of generator in the center, and small views of field coils and armature below.

shorter and the headlights are used a great deal more on an average.

In the summer time, to prevent overcharging the battery, the generator charging rate should be cut down by adjusting the third brush. This is particularly true when the car is being used on long trips at high speeds, as the battery would otherwise be overcharged and overheated, and the generator would also tend to overheat due to the continuous high operating current through its armature.

It is important to know by merely looking at the generator in which direction to shift the third brush. To **increase the charging rate,** the brush should be shifted **in the direction of rotation** of the commutator, and **to decrease the charging rate** the brush should be shifted in the **direction opposite to that of commutator rotation.**

The upper view in Fig. 67 shows the commutator end of an automobile generator with the end-plate and brush rigging removed. The two large brushes placed at right angles to each other are the main brushes and the smaller brush is the third brush, or voltage regulating brush.

The center view in this figure shows the opposite end of the generator, opened up to show the end of the armature winding and the drive shaft by which the unit is coupled to the **engine.**

At the bottom of this figure are shown four field coils and an armature completely removed from the generator frame.

Fig. 68 shows a set of curves which indicate the variations in voltage and current at different engine speeds and for generators operating both cold and hot. Note the difference in the operating current due to the increased resistance of the generator windings after the unit has been operating for some time and is warmed up.

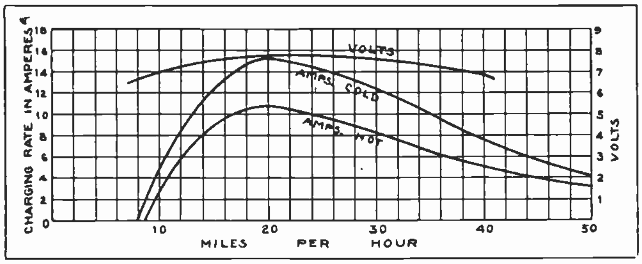

Fig. 68. These curves show the variation in generator voltage and charging current with changes of car speed and variations in generator temperature.

57. GENERATOR CUT-OUTS

In order to prevent the battery discharging back through the generator when the engine speed falls too low to allow the generator to develop a voltage equal to that of the battery, a device known as a **reverse current cut-out** is commonly used.

This device is simply a magnetically operated switch or relay equipped with both a series and shunt winding and a set of contacts, as shown in Fig. 69. The cut-out is generally mounted on top of the generator, as shown in Fig. 69 and also on the photographic view of the lower generator in Fig. 64.

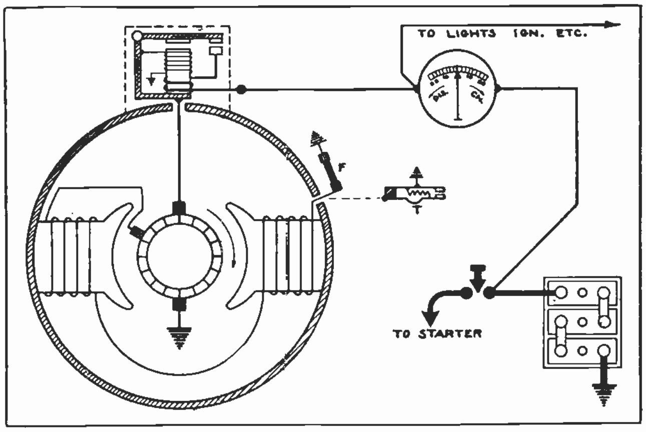

Fig. 69. This diagram shows the connection of an automobile generator and complete charging circuit, including the cut-out, ammeter, battery and field protective devices.

The shunt winding consists of a good many turns of fine wire and is connected directly across the main generator brushes, as can be noted by carefully tracing the circuit from the top brush of the generator in Fig. 69 up through the cut-out frame and shunt coil to ground, by which it returns to the lower brush of the generator. This means that the strength of the shunt coil will always be proportional to the voltage output of the generator.

When the generator voltage rises to about 7 volts the shunt coil becomes strong enough to magnetize the core and attract the armature, closing the contacts in the charging circuits through the ammeter to the battery. This charging current flows through the series coil consisting of a few turns of heavy wire, and this coil is wound so that the current flows in the same direction as through the shunt coil, thus adding the magnetic strength of the series coil to that of the shunt coil and holding the contacts firmly closed.

Whenever the generator speed falls below a certain value, its voltage drops below that of the battery and the battery commences to discharge back through it. This discharge current flowing through the series coil in the opposite direction sets up a magnetic field which opposes that of the shunt coil and demagnetizes the core, allowing the spring to pull the armature back and open the contacts.

A reverse current or discharge current of not over 2 amperes should be sufficient to release the cut-out contacts. These cut-outs not only prevent the battery from discharging through the generator at low speeds, but also prevent the generator from being overheated and burned out in case the engine was stopped and the battery discharged a heavy flow of current through the generator armature in an attempt to motorize the generator, which, of course, is connected rigidly to the engine and cannot be turned because of insufficient torque to rotate the engine.

Fig. 70 shows two types of cut-outs, one with the cover removed showing the coil and contacts.

By referring to Fig. 69 again you will note that the ammeter is connected in series with the generator and the battery so that it will register the current flowing to the battery by a movement of the needle over the side of the scale marked "Charge." This instrument will also register the flow of current out of the battery whenever the battery is discharging through the lights and other equipment.

The ammeter should always be observed when looking for battery or generator troubles, because it gives a good indication of possible reasons for the battery being discharged or overcharged due to too low or too high charging rates, and will also indicate sticking contacts in the cut-out by showing a very heavy discharge when the engine is stopped. Note that the starter connection is taken off the battery in such a manner that this very heavy current doesn't flow through the ammeter.

58. FIELD PROTECTION

Since the third-brush generator depends upon the current flowing through the armature to produce the field distortion necessary for voltage regulation, we can readily see that if the charging current were interrupted it would entirely destroy the regulating action of the generator.

In fact, if the battery becomes disconnected or the charging circuit open, the generator voltage may rise to 30 or 40 volts, because of insufficient current flowing through the armature to distort the field and keep the voltage reduced in those coils between the third brush and the grounded main brush.

With the field flux in a normal, evenly-distributed position over the pole face these coils would generate much higher voltage, excite the field much more strongly, and allow the generator to develop sufficient voltage to quickly burn out the field coils.

To prevent this, field protection is generally provided either in the form of a fuse or a thermostatic cut-out placed in series with the field windings.

In Fig. 69 the fuse is shown at "F" in the grounded field lead.

If the field current rises above the normal value of approximately 5 amperes this fuse will blow and the generator will become dead. Another method of field protection and one that is rapidly replacing the fuse for this purpose is the **thermostatic cut-out,** such as shown at "T" in Fig. 69.

These devices consist of simply a set of contact points, a small resistance, and a spring-like blade made of two dissimilar metals welded together so that when they become overheated they warp in a manner with which you are already familiar.

With this thermostat connected as shown by the dotted lines to the field terminal, in place of the fuse, whenever an excessive current flows through the generator its temperature increases and the strip becomes heated and warps, opening the contacts and thus inserting the small resistance in the field circuit and reducing the charging rate about 40%.

As soon as the temperature in the generator drops enough to allow the strips to cool off the contacts automatically close and bring the generator back into normal operating condition. This device is also a precaution against the generator overheating.

For maximum life of the generator insulation the temperature inside the unit should not exceed 180° F., so the thermostat is designed to open the cut-out points at this temperature and thus reduce the charging rate by inserting resistance in the field.

When the generator cools off again the contacts close and allow the charging current to again rise to normal value. We can see, therefore, that the thermostatic cut-out not only protects the field winding from burning out due to excessive voltage, but also protects the generator against overheating due to heavy charging currents and high engine temperatures.

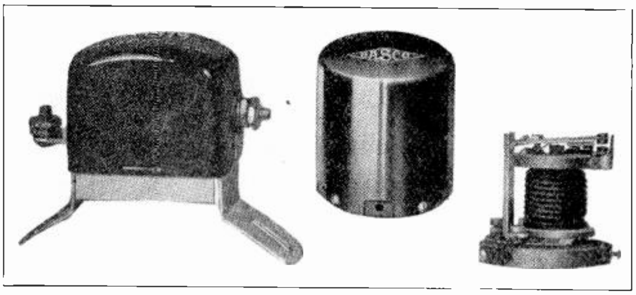

Fig. 70. This view shows two types of generator cut-outs and the one on the right has a cover removed showing the coil and contacts.

59. GENERATOR TROUBLES AND REMEDIES

The generating circuit consists of a generator, cut-out, ammeter, and battery, and the wires which connect these units together. So whenever the battery doesn't charge properly the trouble may be in any of these devices or wires of this circuit.

Normally the generator begins charging the battery at a car speed of about 12 miles per hour and reaches its maximum output at about 25 miles per hour. If the battery doesn't charge properly or the generator performance is not satisfactory the generating system should be checked over until the trouble is found and remedied.

Some of the more common troubles encountered are as follows:

If the generator doesn't charge at any speed it may be due to faults in the generator itself or to a defective cut-out, open circuits or grounds somewhat in the charging circuit, or defective drive where the generator connects to the engine.

A good place to start tracing the trouble is at the cut-out. Remove the insulated wire from the cut-out and touch it to the car frame or engine. If a flash results there is no break or opening in the charging circuit, but if no flash is obtained the circuit should be checked for loose or broken wires.

If the circuit is O. K. start the engine and remove the cut-out cover, and see if the contacts close when the engine is accelerated. If they do not, close them by hand and if the generator then charges the battery the cut-out must be defective.

Quite often the shunt winding will be found to be burned out and in this case the cut-out should be replaced with a new one.

If with the engine running at moderate speed the generator doesn't charge after the cut-out contacts are closed by hand remove the cut-out from the circuit and connect the generator directly to the battery. If the generator now charges there must be a ground in the cut-out and this unit should be replaced or repaired.

Sometimes the cut-out contacts may be found burned or dirty so that they do not close the charging circuit to the battery. In this case they should be carefully cleaned with fine sandpaper.

A defective field protection device may also prevent the generator from charging. If a fuse is used for this protection see whether or not it is blown, and if not see that it is making good contact with the fuse clips.

If the generator is equipped with a thermostat examine this device carefully for dirty or pitted contacts or bent spring blade. If the thermostat is defective it should be adjusted or replaced.

If no trouble can be located in any of the above devices or in the wiring of the generator circuit then the fault is likely to be in the generator itself and it should be removed, and carefully tested.

If the generator charges but at a very low rate it may be due to a loose drive belt, poor brush contact, high resistance in the field circuit because of loose or dirty connections, improper setting of the third brush, or partial short circuits in the winding. The remedies for each of these troubles can be clearly seen without further explanation.

If the generator charges at too high a rate when the car is run at high speed this may be caused by a grounded third brush; or, in case the generator has been recently repaired, the field leads may have been connected wrong. Where one end of the field is connected to the ungrounded main brush the grounding of the third brush will cause the generator to operate as a straight shunt-wound machine and the regulating action of the third brush is eliminated.

If the generator charges when the car operates at low speeds but the charging current falls to zero at high speeds, this is usually the result of poor brush contact, which may be caused by burned or glazed commutator surface, commutator out of round, high mica, loose bearings allowing the commutator to vibrate, weak brush-spring tension, worn or dirty brushes, or brushes stuck in the holders.

If the commutator is out of round or has a very rough surface it should be turned down in a lathe and the mica should then be carefully undercut. The brushes should be sanded in, as explained in the D. C. Motor and Generator Sections, to see that their faces properly fit the commutator and are clean and free from gum or dirt.

Be careful to see that the brush springs are at the proper tension and that the brushes do not stick in the holders.

If the generator overheats badly it may be due to shorted armature coils, or to the armature laminations having been burred together by rubbing on the pole faces, or by rough handling while being repaired.

Burred laminations promote eddy currents which overheat the core and the trouble can be corrected by taking a very light coat off from the core in a lathe or by replacing the armature.

A loose connection in the charging circuit causing high field voltage will also result in the generator overheating; and wrong setting of the third brush allowing an excessive charging rate may be another cause.

If the generator voltage is too high and causes the lights to flare or burn out this is generally due to loose or dirty connections in the charging circuit. High resistance in this circuit prevents the normal flow of current through the armature of the generator and thereby prevents field distortion and the voltage regulating action of the third brush. So an open circuit or loose connection at the battery, ammeter, or anywhere in the generating circuit will cause excessive voltage and may result in a burned out field winding if it is not quickly corrected. In such cases all connections should be carefully cleaned and tightened.

When the generator brushes squeal during operation at certain speeds or at all speeds this may be remedied by cleaning the commutator and sanding off the faces of the brushes; or, in case it is caused by hard brushes, by boiling them for a few minutes in paraffin wax. If the trouble cannot be corrected in this manner replace the brushes with those recommended by the manufacurer.

When testing a generator for internal troubles first take the machine apart and carefully examine it for mechanical defects or any electrical troubles which can be noted. Then test the armature for opens, shorts, or grounds, as previously explained in the section on Armature Winding and Testing.

Next test the fields for the same troubles. Test each of the brush holders for possible grounds due to defective insulation, check the commutator to see that its surface is clean, that there is no high mica, and no short circuited bars. Check the brushes to see that they are all properly fitted, have the right spring tension, and move freely in the holders.

Replace any defective parts before reassembling the generator.

60. LIGHTING EQUIPMENT

The lights are a very important part of every modern automobile, as it is impossible to drive safely on unlighted country highways without two good headlights; and these headlights provide a great safety feature by indicating the position and approximate speed of an approaching car even on lighted streets and highways.

The headlights of a modern automobile should illuminate the road surface for several hundred feet ahead of the car, in order to enable the driver to see people or obstructions in the road in time to bring the car to a full stop from the high speeds at which modern cars are commonly operated.

In order to avoid "blinding" an approaching driver, the headlights should throw definite beams of light which can be kept down on the road surface and below the level of the eyes of other drivers.

Electric lights meet these requirements very nicely by supplying a concentrated beam of high candle power that can be quickly and easily focused and controlled. Therefore, electric lighting is now used without exception on all modern automobiles.

The headlights are generally provided with a dimming device which enables them to be dimmed or their beams to be dropped lower when meeting another car, and then brightened or the beams raised for vision farther ahead on a dark country road.

In addition to the headlights, most cars are equipped with cowl lights, tail light, stop light, dash light, and dome light, while some have additional small convenience lights at various places in the car.

Cowl lights are small lights located one on each side of the body of the car just in front of the wind shield. These lights can be left on when the car is parked and they serve to show the position of the car to another driver. They are much smaller and require a great deal less battery current than would be used if the headlights were left on. Cowl lights can also be used for driving the car on well lighted streets or roadways.

A tail light is very essential to indicate the rear of the car to a driver approaching from behind and also to illuminate the license plate as required by state laws. The tail light should always be kept in good condition so that it shows a distinct red light to the rear of the car, as this affords a great amount of protection from rear end collisions both when the car is in operation and when parked. A car should never be operated or left parked without a good tail light.

The stop light is a more recently developed light which goes on when the brake is pressed and indicates to a following driver that the car ahead is about to slow down or stop. Stop lights also afford a great amount of protection to the rear ends of automobiles; and, for reasons of one's own safety as well as courtesy to fellow drivers, cars should never be operated without a good stop light.

The purpose of the dash light or lights is to illuminate the various instruments on the dash or instrument board of the automobile, enabling the driver to see his speedometer and the meters and instruments which indicate various conditions, such as engine temperature, fuel level, oil pressure charging rate, etc.

Dome lights illuminate the interior of the car and are particularly convenient when getting in and out of the car at night, or whenever one desires to see within the interior of the car. Dome lights, however, should not be left on when a car is driven along a dark highway as they interfere with the view of the road ahead.

All automobile lamps are designed to operate at low voltage, generally six volts, and are connected to the battery through the ammeter and conveniently located switches.

The bulbs for the various lights are designed with filaments of various resistance and wattages according to the amount of light required. The headlights, of course, are the larger and the various other lights use smaller bulbs.

A single-wire system is now in general use for the wiring of automobile lights, and the other terminal of each light socket is grounded so that the current returns through the car frame to the grounded terminal of the battery. This arrangement greatly simplifies and reduces the cost of wiring systems, and also lessens the possibilities of trouble in the circuits.

Many people are inclined to operate their cars with one or more defective lights because they do not realize the importance of lights as a safety feature, or do not realize how easily and cheaply lights can all be kept in good condition. It is a simple matter for the experienced or trained service man to quickly locate and repair almost any trouble in the lighting system, and every attempt should be made to encourage customers to have defective lights repaired or replaced immediately and keep them in good condition at all times.

61. HEADLIGHTS

Headlights, as previously mentioned, are the most important of any lights on the automobile. Headlights are carefully designed to project the light beams on the roadway in the proper manner to give the driver a good view of its surface some distance ahead and to avoid glare in the eyes of approaching drivers.

Each headlight consists of the following important parts: Electric light bulb which supplies the light; reflector which controls and concentrates the light beam; lamp housing in which the bulb and reflector are supported; bulb adjusting devices used to focus the light: front glass or lens; and lamp standard or bracket which attaches the headlight to the car.

Fig. 71 is a diagram showing a sectional view of a headlight and in which each of the above parts can be noted.

The lamp housings are made in various styles and shapes to fit the design of the car, and the reflectors are made of silvered metal of the proper shape to gather all the light rays thrown backward and sidewise from the bulb and concentrate them forward in one beam upon the road surface.

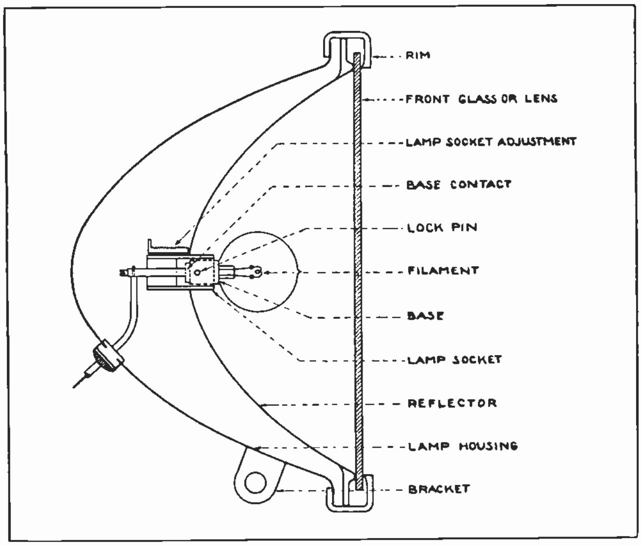

Fig. 71. Diagram showing the construction of a common type of automobile headlight. Note that the lamp socket is adjustable for focusing the light rays properly with the reflector.

Headlight lenses are of various types, some having specially cut or ground glass with ribs or corrugations to aid in directing or diffusing the light as desired.

The lamp adjusting device allows the bulb to be moved either forward or backward in the socket to **adjust the focus of the light** beam and make it broader or narrower.

Automobile headlight bulbs are constructed quite similarly to regular incandescent light bulbs, with which you are already familiar, except that their **filaments are** designed for lower voltage and are therefore made of lower resistance and to take heavier currents in order to produce the desired wattage. These bulbs have a concentrated filament which produces the light from a source of a very small area, thus making it easy to focus and direct with the reflector and lens.

The bulbs are small, ranging in diameter from about an inch to an inch and a half, and are secured to a metal base or ferrule by means of which they are held into the socket and connected to the electric circuit.

Some headlight bulbs are of the single filament type but most of those used on recent makes of cars are of the double filament type, having two separate filaments located one above the other and either of which can be turned on at will by the light switch.

One filament is used for directing a bright beam a long distance down the road, while the other is used for directing a beam of less brilliancy slightly downward and at a spot on the road closer to the front of the car. This latter filament is used when meeting another driver and helps to further reduce the blinding glare in his eyes.

On single filament lamps one end of the filament is connected to the outer metal ferrule of the lamp base which is grounded to the lamp housing when the lamp is placed in the socket. The other filament lead is insulated and connected to a small terminal in the base of the socket by which it makes contact with a spring terminal attached to the insulated light wire leading from the battery and switch to the lamps.

Double filament bulbs have one end of each filament grounded to the ferrule and the other two ends brought to separate insulated contacts in the lamp base.

On the left in Fig. 72 are shown two headlight bulbs, one of the double filament and one of the single filament type; and on the right are shown two of the smaller bulbs such as are used for dash lights, tail lights, etc.

62. DIMMING OF HEADLIGHTS

As mentioned before, it is desirable to provide some means of dimming or dropping the headlight beams when meeting another driver, and thus avoiding throwing in his eyes a glaring light which would make it impossible for him to see the road or the exact location of the approaching car.

There are in general use two common methods of dimming; one by using a resistance that is cut in series with single filament bulbs, and the other and more popular method of using double filament bulbs.

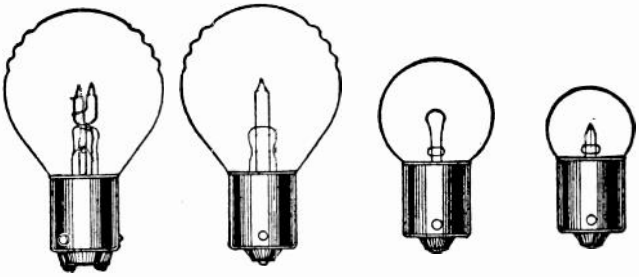

Fig. 72. Several types of double and single filament bulbs used for headlights and other lights on automobiles.

Fig. 73-A shows a diagram of the wiring for headlights using the resistance method. When the switch is at the left in the position shown, the resistance is in series with the bulb filaments and reduces their current and light output. When the switch is moved to the right the resistance is cut out, bringing the bulbs up to full brilliancy.

In Fig. 73-B is shown the wiring for the double-filament type lamps. When the switch is on the left contact the lower wattage upper filaments of the lamp are in use. These filaments being located somewhat above the center of the reflector cause the beam to be thrown downward and closer to the front of the car. When the switch is thrown to the right-hand contact the heavier wattage lower filaments are in use, and as these filaments are in the center of the reflector their light beams are thrown slightly higher and farther ahead along the road.

The smaller or dimmer filament is generally of 21 candle power, (C.P.) and the larger filament or main headlight filament of 32 C.P.

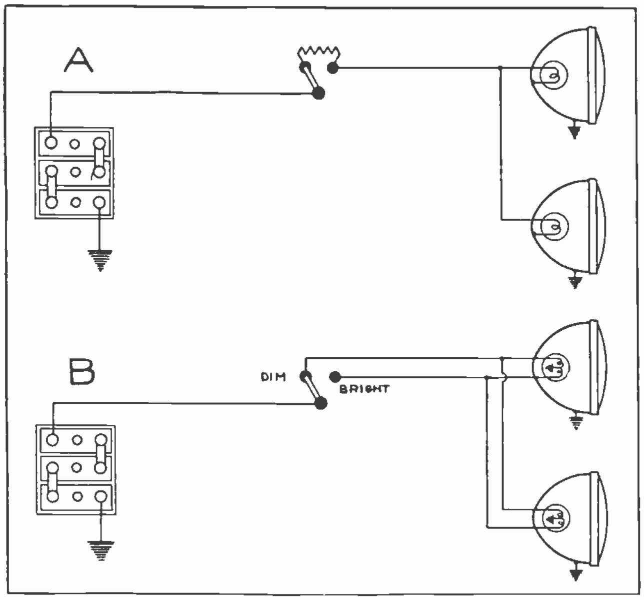

Fig. 73. A. Diagram showing resistance method of headlight dimming. B. Double filament method of dimming or "dropping" headlight beams.

The light switch for turning headlights on and off and for dimming them was formerly located on the dash of automobiles, but on modern cars it is generally located either on the steering wheel or column; or a foot switch is placed near the clutch pedal. Either of these arrangements is much more convenient than the dash switch for reaching the switch and dimming the lights when necessary.

63. LIGHTING SWITCHES

The upper view in Fig. 74 shows several types of operating levers for lighting switches and below are shown the switch contacts mounted on the insulating base of the switch. When the switch levers are mounted on the dash the switch mechanism and contacts are generally mounted directly behind them. When the switch levers are mounted on the top of the steering column the switch mechanism is generally mounted on the lower end of the column and operated by a long rod which runs from the lever down through the column.

The switch-lever positions are generally marked according to the lights that are turned on in each position, such as cowl or side, bright or head, dim, off, on, etc. The stationary contacts on the switch bases are also usually marked, so that it is an easy matter to connect the various light wires to the switch.

One of the contacts is connected directly to the battery. When the switch is turned on the contact fingers slide around to close circuits from the battery contact to the various sets of lights, according to the position the switch is placed in.

In case the switch contacts are not marked the battery terminal can be located by testing with a piece of wire grounded to the frame of the car. The battery terminal is the one which will give a flash when touched with this grounded wire and with the switch in the off position.

Now connect one end of the test wire to the battery terminal and try out the remaining contacts with the other end, and note the results. When the end of the wire is touched to the headlight contact the headlights will light; and if the tail light contact is touched this lamp will light, etc., and in this manner the different terminals can be quickly and easily located.

If a switch has been removed for repairs and all the wires are disconnected they can be tested out and connected up as follows:

Touch to the car frame each of the wires that connect to the switch until one is found which gives a flash. That is the live wire from the battery and should be connected to the battery contact on the switch. Touch the remaining wires on the battery contact until the tail light wire is found by the tail light burning when a certain wire is touched. Then connect this wire to the contact marked "tail light," or to the one which will give a light when the switch is on in any position. The tail light is generally switched on when any of the other lights are on.

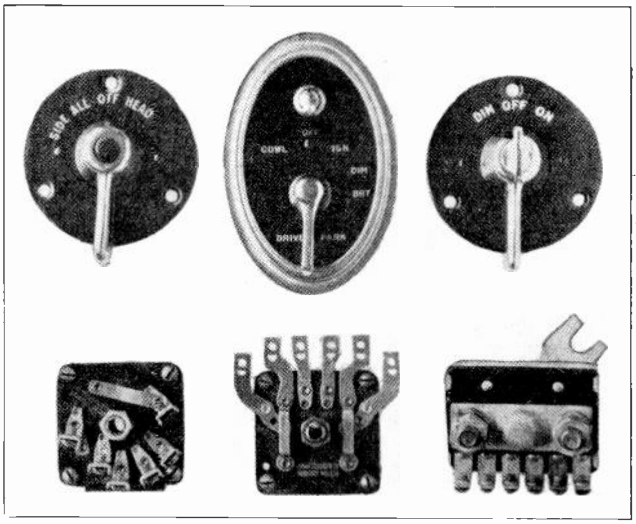

Fig. 74. At the top of this figure are shown several types of light switches and below are shown the backs of the switches with their various contacts for the different light circuits.

The wires to the other lights can be found in the same manner and connected to the properly marked switch contacts or to the contacts which will give a light when the switch lever is in the proper position for whichever light is being connected.

The stop light is generally controlled by a small switch located under the floorboards of the car and operated by a wire and spring attached to the brake pedal.

Dome lights and other convenience lights around the car are generally operated by small snap or push button switches located in convenient places.

The dash light on modern cars is generally switched on whenever the headlights or other driving lights are on. In some cases it is left off when only the parking lights are on, and in other cases it is equipped with a special snap switch of its own so that it can be turned off when desired.

Dash lights are sometimes connected in series with the tail light, so they will go out and warn the driver any time the tail light burns out.

64. TROUBLES IN LIGHTING SYSTEMS

The electric wiring on an automobile is comparatively simple and the wires are usually partly visible, so generally no complicated testing or elaborate test instruments are required to check the system for such common troubles as opens, shorts, grounds, loose connections, etc.

A simple low-voltage test lamp made up with a six-volt bulb or a low reading voltmeter is often very convenient. However, in the majority of cases a screw driver and a short piece of test wire are all that is necessary to locate troubles.

Some of the more common troubles and remedies of automobile lights are covered in the following paragraphs.

If all of the lights fail to light when the switch is turned on, check to see if the main fuse is burned out, and if it is not, see that it is making good contact with the fuse clips.

If a circuit breaker is used, check to see if the contacts are dirty or pitted, or if the plunger is sticking.

Test with a short test wire from the battery terminal on the switch to ground or to some metal part of the car, and if a flash is obtained this indicates that battery current is reaching the switch and that the trouble is very likely in the switch itself. By removing and checking the switch the loose, dirty, or bent contacts can generally be located.

If no flash results when the battery contact on the switch is grounded with the test wire, check for a broken wire between the switch and battery or for a burned out ammeter.

Failure of all lights might also be caused by all of the bulbs being burned out due to a surge of high voltage from the generator, but this is very unlikely as all the lights will not usually burn out at once and such a surge would be noticeable if they did.

If at any time during the operation of the car the lights all brighten up considerably, shut off the engine immediately and check for a loose connection in the generator charging circuit, since this is the most probable cause of an increase in generator voltage as previously explained.

65. HEADLIGHTS FAIL

If the headlights do not light up but all of the other lights do, the trouble will be in the headlight bulbs or the headlight circuit somewhere.

If the lighting system is one in which each of the light circuits is separately fused, examine the headlight fuses first. Next remove the insulated plug which leads to the lamp housing and connects to the bulb socket, and touch this plug to the back of the lamp housing or car frame. If no flash occurs it indicates a break between the headlight and the battery, probably in the switch but possibly in the wire.

If no flash is obtained when this terminal is grounded, test next with a wire from the headlight contact on the switch to ground, and if no flash occurs here connect the test wire from the battery terminal on the switch to the headlight contact. If the lights then burn the trouble is proved to be in the switch.

Remove the switch and check for dirty, burned, or pitted contacts and switch fingers. Also see if the contact fingers have lost their spring tension due to overheating. The switch lever must be in the headlight position while making these tests.

If a flash was seen when the insulated headlight plug was touched to the car frame, the trouble must be in the headlight. Remove the lens and examine the bulb or test it, and if it is burned out, replace it. If the bulb is all right, the trouble may be due to the fact that the contact on the insulated plug is not making good contact to the bulb. It may also be caused by rust forming between the reflector—in which one end of the light filament is grounded—and the lamp housing, or between the lamp housing and the car frame.

Rusty or dirty connections at these points mean an open or high-resistance circuit between the grounded terminal and the battery.

To test for an open or high-resistance connection between the reflector and the grounded terminal of the battery, place one end of the test wire on the wire which carries the current to the headlights and touch the other end to the reflector. If no flash is obtained, check for poor contact between the lamp contacts and housing, or between the housing and car frame.

The various other lighting circuits can be tested out in the same manner as outlined for headlights. Check to see if the current is carried through the wire all the way up to the light, and then test for burned-out bulbs and poor grounds between the lamp housing or socket and car frame.

66. FLICKERING AND FLARING OF LIGHTS

Headlights and other lights are sometimes caused to flicker by loose connections in the lighting circuits, and very often this trouble is found to be at the insulated plug which connects to the lamp housings.

The small springs which connect the plug and bulb terminals together either become weak or stuck, or burned and dirty. Sometimes it is only a small amount of corrosion that is responsible for high resistance in the circuit and causes the lights to dim or flicker occasionally.

In this case the trouble may be remedied by merely working the plug back and forth in its socket to rub off the corrosion and brighten the contacts. When the trouble is due to weak contact springs, these springs may be stretched out or the trouble may be remedied by adding a small drop of solder to the bulb contacts, thereby increasing the pressure and tension on the spring contacts.

If the flickering is not due to trouble in the lamps or at the plug connections, then check over the entire circuit, cleaning and tightening any dirty or loose connections; and, if it is necessary, check the switch for loose or burned contacts.

As previously mentioned, flaring lights are generally caused by loose connections in the generator circuit or defects in the generator. In such cases all connections in the generator and charging circuit should first be carefully cleaned and tightened.

If the lights still burn excessively bright, the trouble may be a partially broken wire in the generating circuit or some defect in the generator itself. If the trouble seems to be in the generator, it should be removed and checked for broken wires, poor brush contact, sticking brushes, or grounded third brush.

67. TEST PROCEDURE

When checking the electrical system on a car for faults or troubles, always follow the plan of testing out first those parts of the circuit that are easily accessible and therefore most easily eliminated as possible sources of trouble.

For example, when lights fail, always check the fuses or circuit breaker first before checking over the switch contacts and wiring. Never disassemble the lighting unit to check for bulb and other lamp troubles without first making a test with the light switch on by grounding the plug at the back of the lamp housing to make sure that current is reaching the lamp. If a flash is thus obtained, it indicates that the trouble is in the lamp itself.

If the car lights burn dim, it is generally caused by a weak battery or connections that are loose, corroded, or dirty and of high resistance.

If only certain lights burn dimly, check that circuit carefully, cleaning and retightening any contacts or connections that appear doubtful.

If all lights are dim, the battery and its connections should be checked first of all. Poor contact due to corrosion or rust forming between the terminals of the lamp base and the spring connection to the plug are often the cause of dim lights, and in other cases they are caused by rust forming between the various parts of the lamp housing or between the lamp housing and the car frame where the light obtains its ground circuit.

Sometimes rust or a poor connection between the lamp housing and car frame can be burned out or welded into a better connection by connecting one lead of a battery to the housing and the other to the frame, thus passing a heavy current through this circuit.

If this doesn't work, the housing should be removed and the contact surface sandpapered or scraped clean, and then remounted and securely tightened.

High-resistance connections between the ammeter and battery will cause the lights to flare when the engine is speeded up.

68. SHORT CIRCUITS and CIRCUIT BREAKERS

As a great deal of the wiring on automobiles is run along the metal parts of the frame and held in small clips, and as the frame is used for the other conductor of the circuit, it is quite common to find short circuits resulting from chafed or damaged insulation, allowing the wires to touch the frame or metal parts of the car.

These wires are subjected to very severe service, due to road vibration, dirt and oil accumulating on them, and occasional abuse by careless mechanics working on other parts of the car. Oil tends to rot the rubber insulation, and vibration tends to chafe the insulation off the wires where they rub under the clips or against other metal parts. Sometimes the insulation becomes damaged by being jammed with a heavy tool or metal part during some mechanical repair or overhauling of the car.

To protect the wires in case of such grounds and short circuits, and also to eliminate the fire hazard as much as possible, the lighting and accessory circuits of automobile electric systems are generally protected by fuses or circuit breakers.

Fuses and circuit breakers are never connected in either the generating or ignition circuits. In some cases fuses are used in each separate circuit, while in other cases one main fuse is used to protect all the circuits. In this case the fuse is generally placed on the back of the lighting switch.

The small circuit breakers which are often used in place of fuses are very simple devices consisting of a switch operated by an electro-magnet or solenoid, as shown in Fig. 74-A.

When the normal load current, which is generally under 15 amperes, is flowing through the coil and contacts of the circuit breaker it doesn't create enough magnetism in the coil to lift the plunger and open the circuit; but if the current should rise to a value of 25 amperes or more, due to a short circuit in the wires, it creates sufficient magnetism to raise the plunger, causing it to strike the contacts and break the circuit.

When the contacts are thus opened and the circuit is broken, the coil is demagnetized and allows the core to drop, due to the action of gravity and of a small

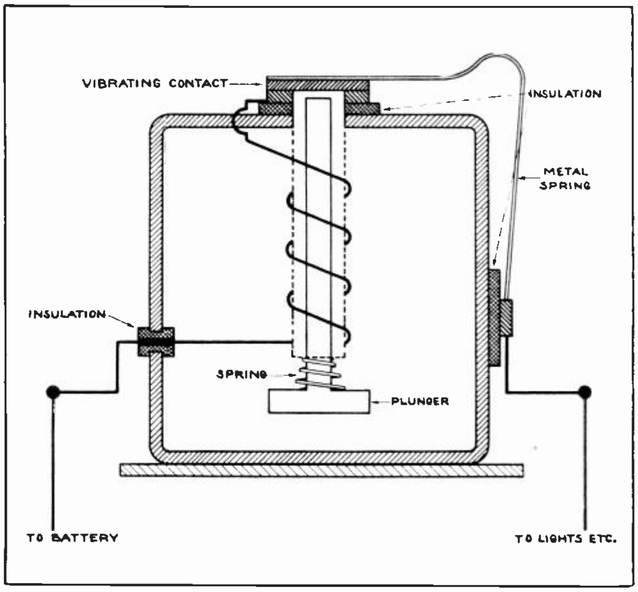

Fig. 74-A. Diagram of a simple magnetic circuit breaker for protecting automobile wiring circuits in case of shorts and grounds.

spring, which also tends to pull it back. This again completes the circuit, magnetizing the coil and once more raising the plunger to break the contacts.

From this we see that the breaker continues to vibrate somewhat on the order of a vibrating bell, thus limiting the current to prevent overheating of the circuits and also making considerable noise to call attention to the fault so that the defective circuit will be switched off and the trouble removed.

69. TESTING FOR SHORTS

When a short occurs in the wiring to the lighting system or horn, it may be either in the wires themselves or at the switches, lamp, socket, connectors, etc. To locate the short, first determine whether a fuse or circuit breaker is used.

If a fuse is used, connect a 21-candle power lamp across the fuse clips to serve as a trouble light. If a circuit breaker is used, just turn on the switch and let the breaker buzz. If the lamp lights or the breaker buzzes with the lighting switch in the "off" position, then look for the trouble in the stop light and accessory circuits.

Disconnect the wire from the stop light switch and if this stops the breaker buzzing or extinguishes the trouble lamp, the fault is in the stop light circuit between the switch and the lamp, and in the majority of cases it will be found in the switch itself.

As the horn is generally connected through the fuse or breaker, the same test should be made on it. Disconnect the wire from the horn to see if the breaker stops or the light goes out. If it does, the fault is in the horn; and if not, the trouble is in the wire. If the fault is in the wire leading from the horn to the button, the horn will blow continuously.

If a short circuit occurs only when the light switch is on, turn the switch lever from one position to the other to determine which part of the circuit the trouble is in.

If the circuit breaker stops buzzing or the trouble lamp burns dimly in certain positions of the switch, it indicates that these circuits are clear, and the trouble lamp burns dimly in such cases because it is in series with the other lights.

If a clear indication is obtained with the switch on all positions except the headlight position, this indicates that the trouble is in the headlight circuit, and you should next remove the plugs which connect the wires to the lamp housings and bulb socket.

If the breaker then stops or the trouble lamp goes out, the short is due to the plug contacts touching the lamp housing in some way. Careful inspection will then generally show where the fault is and the trouble can be remedied by properly adjusting or reinsulating the sockets according to the nature of the fault.

If the trouble lamp remains lighted or the breaker continues to buzz after the plugs have been removed from the lamps, it indicates that the trouble is in the wiring. To locate the exact point, start at the lamp and trace each circuit back, paying particular attention to any point where the wire is secured to the frame by clips. Pulling or moving the wire will often help to locate the trouble, because, if the breaker stops buzzing or the trouble light goes out when the wire is moved to a certain point, the fault is evidently close to that position.

In certain cases where the system is wired with armored cable and the short is hard to locate, it is cheaper to rewire the circuit with new wires than to spend too much time trying to locate the fault.

Sometimes an intermittent short will occur and last just long enough to blow the fuse and then disappear. This is generally caused by a loose wire touching the car frame when the machine is in motion, and this wire may strike against the frame when the car hits a bump. Try to determine what position the switch was in when the short occurred and then carefully inspect that circuit for loose wires, defective insulation, etc.

If the trouble is noticed in all switch positions, the fault is very likely to be in the tail light circuit; while, on the other hand, if the short occurs with the lighting switch off, look for trouble in the stop light and accessory circuits.

70. LEAKY INSULATION

Sometimes a partial short or high-resistance ground will allow a slow leakage of current from the battery that is not enough to blow the fuse or operate the breaker, but will cause the battery to continually run down. Generally this trouble will be indicated by a low reading on the ammeter when all the electrical devices are turned off, but the ammeter would not indicate a fault in the starting circuit or in the wire from the battery to the ammeter.

In some cases the leak may not be great enough even to show a noticeable reading on the ammeter.

To test the system for such leaks, disconnect one of the cables from the battery terminal and connect in the circuit a low-reading voltmeter with a range of 6 to 10 volts. With all switches and electrical devices turned off, the voltmeter shold not give any reading, and if it does a leak is indicated.

First disconnect the stop light wire and see if it causes the meter to read zero, and if it does the leak is in that circuit. If the trouble is not in the stop light circuit, then disconnect the wire which leads from the battery to the ammeter by removing the connection at the meter.

If the voltmeter now reads zero the trouble is in or beyond the ammeter. Next remove the wires from the other ammeter terminal and touch them one by one on the "hot" lead to the battery. When the faulty wire is touched to the battery lead the voltmeter will show a reading, and in this manner the defective circuit can be located. This circuit can then be carefully checked over for defective insulation or leaks. Very often it is easier and cheaper to entirely rewire the circuit.

Of course, one should not assume that such a leak is always the cause of a run-down battery, as it is more often due to too low a charging rate or the car is not being operated enough hours per week or month to keep the battery well charged.

Excessive operation of the starter or driving mostly at night with the lights on, or equipping a car with too many additional electrical accessories will also result in a run-down battery.

Remember that to keep a battery fully charged in the winter, so that it will properly operate both lights and starter, requires a considerably greater charging rate than during the summer months.

With normal driving the winter charging rate should be about twice as great as that for summer use.

From the foregoing explanations of lighting circuit troubles and remedies you can readily see the advantage of having a good general knowledge of electrical principles and circuits, as trouble shooting on the electrical systems of automobiles is simply a matter of definite circuit tracing and testing, the same as with any electrical power or signal devices.

With all the general training that you have had in this line and the knowledge you can obtain from this section on automotive electrical devices and circuits, it should be a very easy matter for you to locate troubles in any part of the wiring system of a car.

71. AUTOMOBILE HORNS

Automobile horns are made in many different types and sizes, but most of them are of two general types as far as their mechanical operation is concerned. One type uses a small motor to drive a notched or toothed wheel that rubs against a pointed button mounted on a diaphragm, as shown in Fig. 74-A.

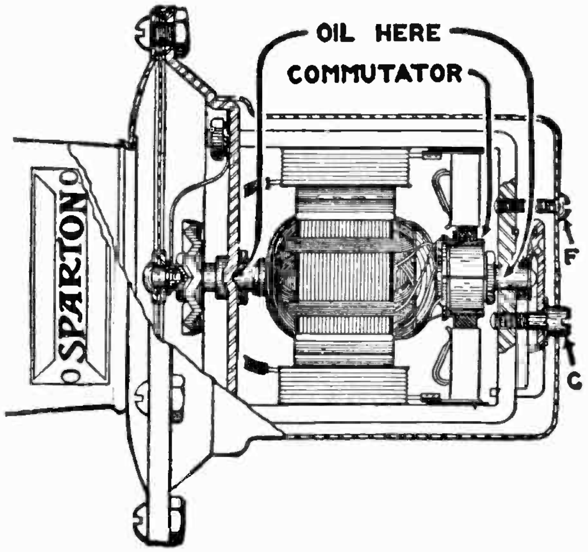

Fig. 75. This diagram shows a cut-away view of a motor-driven automobile horn. Note the notched wheel which vibrates the diaphragm by rubbing on the pointed button at its center.

When the horn button is pressed, current flows through the motor and causes the toothed wheel to rub on the button and vibrate the diaphragm rapidly. This vibration is transmitted out through the horn in the form of air waves or sound.

The other common type of horn uses a magnetic vibrator with one or two electro-magnets and an armature, and operates very much on the principle of an ordinary vibrating bell or buzzer.

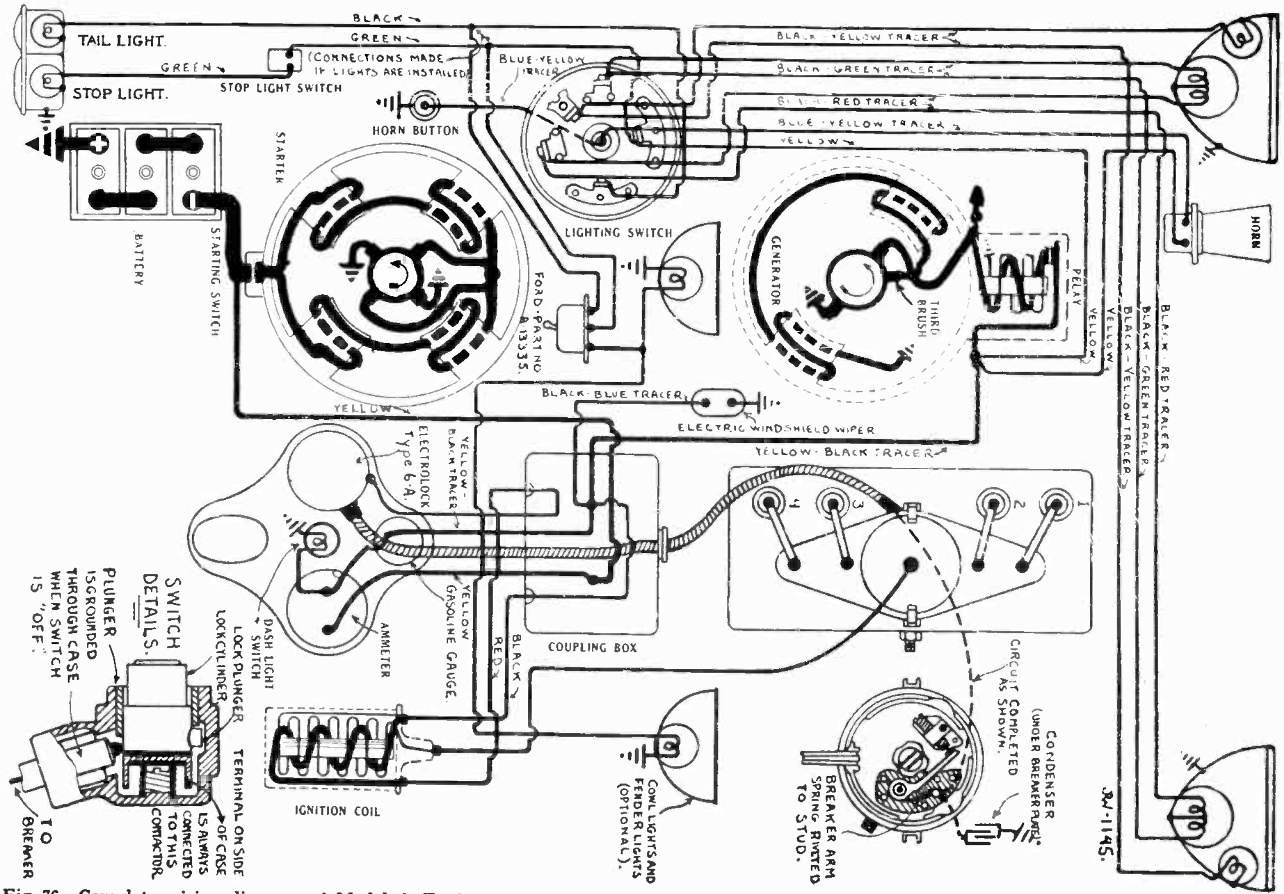

Fig. 76. Complete wiring diagram of Model A Ford car. This diagram shows the wiring for the starter, generator, ignition and lights. Trace out each part of the wiring until you thoroughly understand the entire system. Courtesy National Automotive Service.

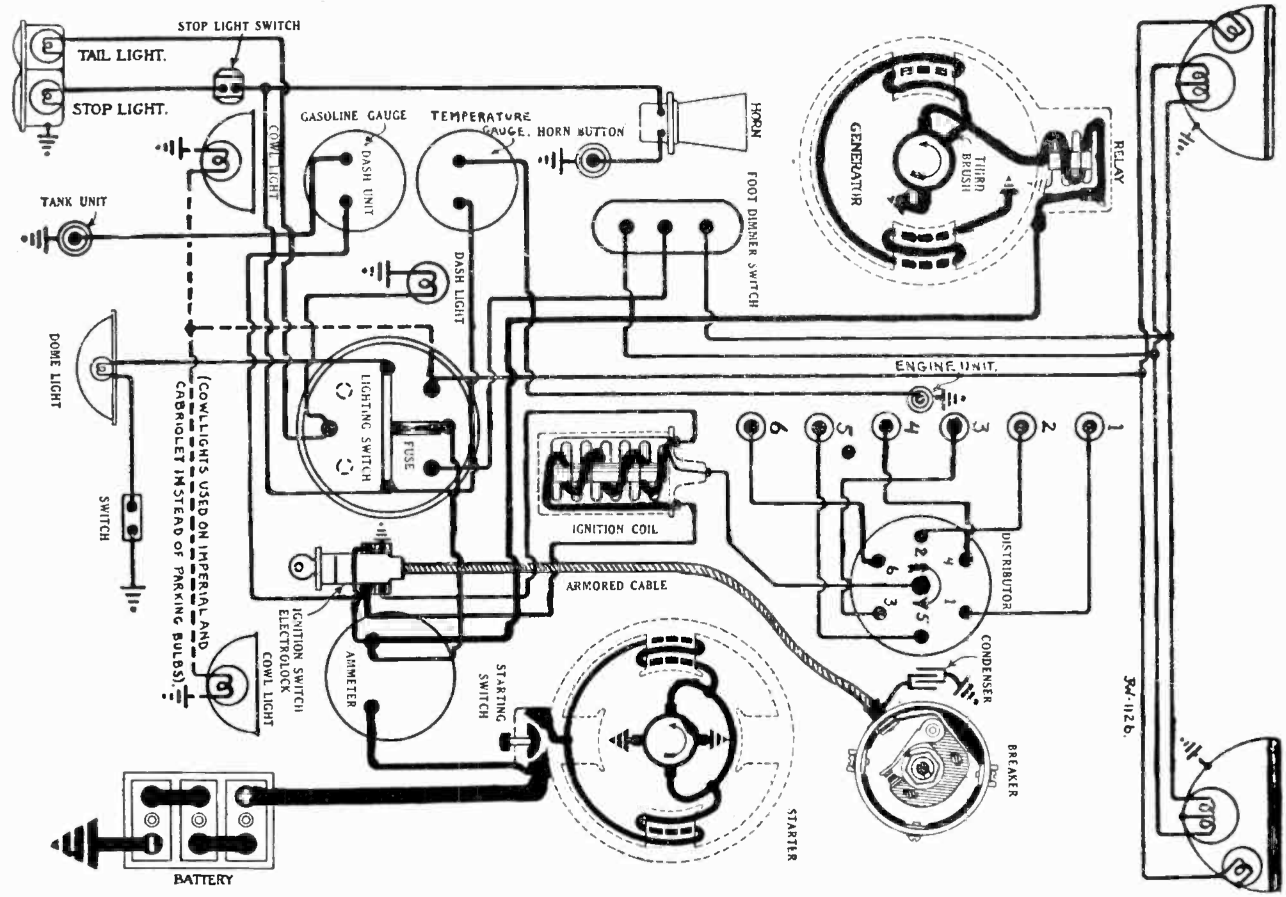

Fig. 77. Complete wiring diagram of 1930 Chevrolet. Note carefully the location and arrangement of all of the electrical devices. Trace the circuits one at a time to become thoroughly familiar with the common types of automobile wiring systems. Courtesy National Automotive Service.

The armatures of automobile horn vibrators are generally much heavier and are fitted with special springs to obtain the loud notes required to be heard in automobile traffic. The different high and low pitched notes are obtained by designing the vibrators or motor wheels for different speeds to get different frequencies of vibration of the horn diaphragm.

The care of motor-type horns is very similar to the care of any small D. C. motor such as those with which you are already familiar. Commutator and brushes generally require the most frequent attention and the bearings should be occasionally lubricated, unless the horn is of a type using ball bearings, or has inside of it permanent lubricating cups which do not require attention for a year or more at a time.

The greater number of troubles affecting horn operation are in the wires leading to the horn or at the horn button, rather than in the horn itself, except perhaps in some of the very cheaper grades.

Care of the vibrating-type horn is similar to the care that would be given any heavy-duty vibrating bell, in that it will possibly require occasional cleaning of the make-and-break contacts or adjustment of the armature spring.

A great many horns are equipped with an adjusting screw either against the back end of the armature shaft or sometimes located down inside of the horn at the center of the diaphragm. By means of this screw the pressure of the diaphragm button against the notched wheel or vibrating armature can be adjusted to slightly change the pitch or note of the horn, or to improve the operation of the horn in case the button or wheel becomes worn away with use.

Some special types of horns are operated by air supplied by a small motor-driven air pump of the rotary type which is built right into the back of the horn. The connections of the horn and horn button to the switch or ammeter terminal are shown in some of the complete wiring diagrams of automobiles.

72. COMPLETE WIRING SYSTEMS

Fig. 76 shows a complete wiring diagram for a 1930 Model A Ford. Note carefully the general arrangement of the various parts and circuits, and trace out each circuit one at a time.

For example, first trace the starting circuit from the battery, through the starting switch and starting motor to ground. Then trace the generator and charging circuit from the generator through the cut-out, ammeter, and battery. Next trace the ignition circuit from the battery through the ignition switch, primary coil winding, breaker points, and back to the battery; and the secondary circuit from the high-tension lead of the coil through the distributor to the spark plugs.

Finally trace out the lighting circuit from the battery

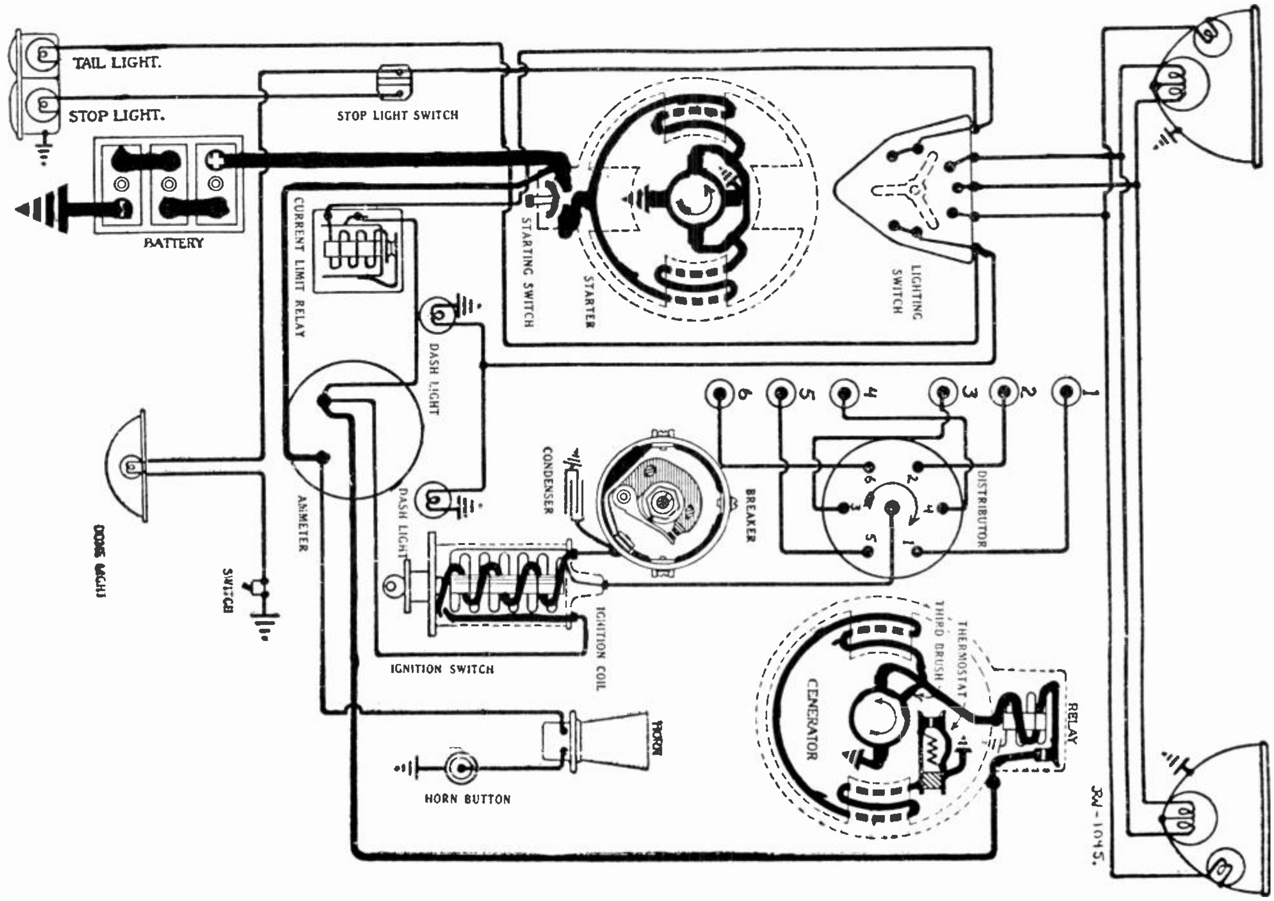

Fig. 78. Wiring diagram of 1930 Oldsmobile car. Note the circuit breaker or current limit relay used for short circuit and overload protection, and also the thermostat overload device for protection to the generator.
Courtesy National Automotive Service.

through the ammeter, lighting switch, and to the various lights.

Note that the wires of different parts of the system have insulation with different colored markings, which is a great aid in tracing circuits on the car and shooting trouble in various parts of the system.

Fig. 77 shows the complete wiring diagram and all of the electrical devices for the 1930 model Chevrolet.

The electrical equipment used on these cars is made by the Delco Remy Company, who are one of the larger manufacturers of automotive electrical equipment.

Trace out this circuit very carefully and you will note that although there are some small differences in the arrangement of parts and wires, the general system and principle are very much the same as in Fig. 76.

Fig. 78 shows the complete wiring diagram of a 1930 Oldsmobile, which is also equipped with Delco Remy apparatus.

Fig. 79 shows the wiring system of an eight-cylinder Packard automobile, using two coils and the double breaker contacts.

In addition to the automotive electrical equipment made by the Delco Remy Company of Dayton, Ohio, there is also that supplied by two other leading manufacturers—The Northeast Electric Company, Rochester, N. Y., and the Autolite Corporation of Toledo, Ohio. These concerns make most of the electric devices for automobiles; while magneto ignition systems for trucks, tractors, marine engines, etc., are supplied by the American Bosch Corporation at Springfield, Mass.; Eisemann Magneto Corporation, New York, N. Y.; Sims Magneto Company, Orange, N. J., and several others.

It is a very good plan to keep in mind that special information on various ignition devices or repair parts can always be obtained by writing directly to the manufacturers or by getting in touch with their nearest local distributor.

For those who may wish to specialize in automotive electrical service there are special service manuals or books containing wiring diagrams of practically all cars and trucks manufactured.

These diagrams are very convenient to have on hand when tracing troubles or testing circuits of certain makes of cars, but as these systems are a great deal alike in many respects and are far too numerous to include all of them here, we have just shown a few of the most common types to give you a general idea of complete automobile wiring systems.

The wiring diagram for any certain make of car can generally be obtained without charge from the automobile manufacturers, or we will be glad to supply at any time information as to where you can obtain special books on wiring diagrams for any graduates who may make a specialty of automotive electrical work.

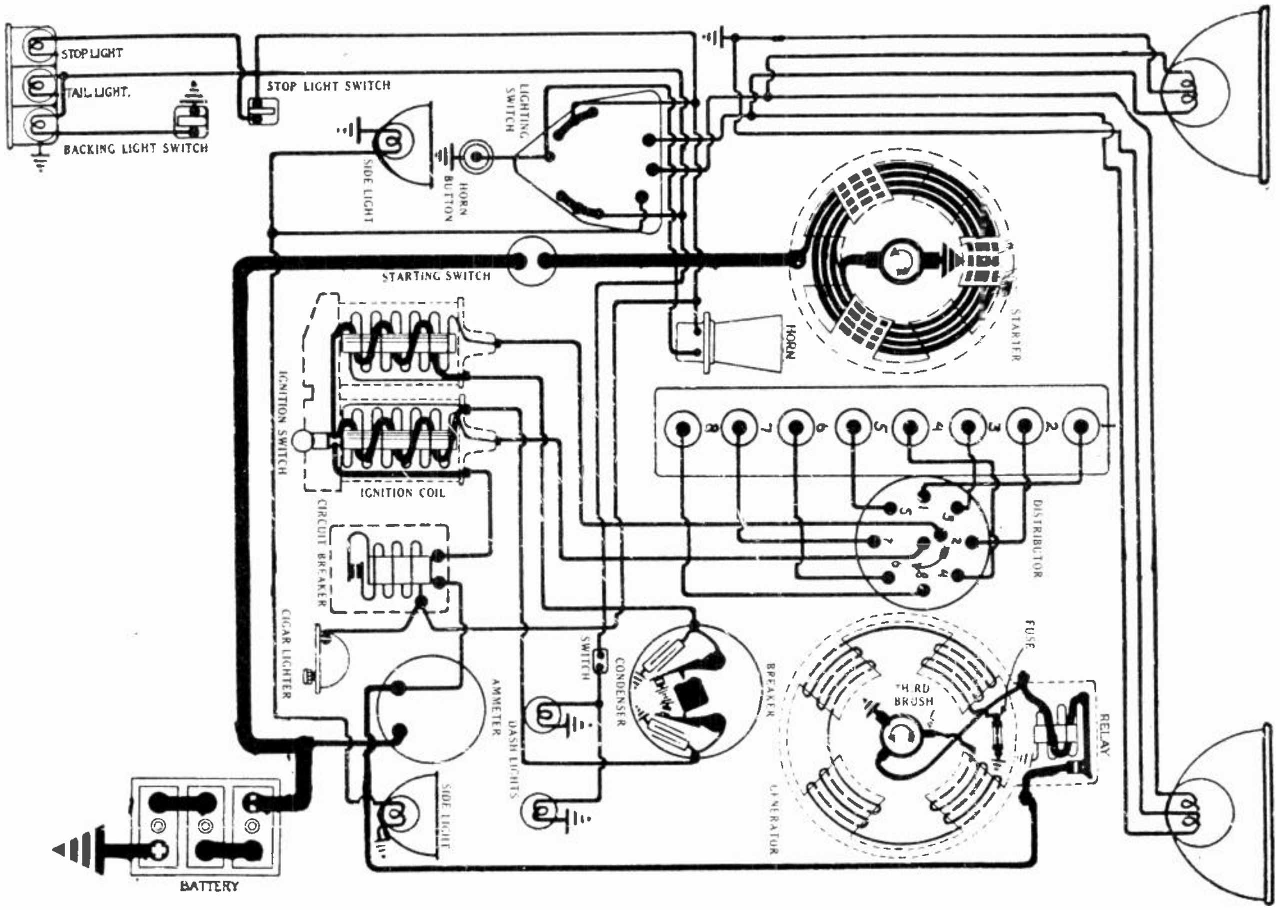

Fig. 79. Complete wiring diagram of an eight-cylinder Packard automobile. Note the two ignition coils and high speed distributor with double breaker arms used on this "line eight' engine. Also note the peculiar field coil construction in the starting motor by which one large coil wire around the motor frame is used to produce alternate poles in the field pole cores. Courtesy National Automotive Service.

Whether or not you make automotive electricity your regular trade or business, remember that to be able to locate and repair electrical troubles on your own car will often come very handy and will save you considerable time and money; and it may also enable you to make extra money on the side by repairing the ignition equipment of someone else's car.

Keep in mind at all times that systematic, thoughtful circuit tracing and testing will locate any electrical trouble that can possibly occur in any part of an automobile ignition or wiring system; and that in a great majority of cases these troubles arise from such simple things as loose connections, shorts or grounds, all of which can be easily repaired by anyone with the general knowledge of electricity that you should have from your course and this reference set.

COYNE
Electrical School
CHICAGO ∼∼ ILLINOIS

ESTABLISHED 1899

ELECTRIC STORAGE BATTERIES

Lead-Acid Cells
Plates, Pasting and Forming, Separators, Containers,
Electrolyte, Specific Gravity, Hydrometers,
Chemical Action.
Battery Tests
Voltage Tests, Cadmium Tests, Hy-rate Discharge Tests
Battery Capacity and Capacity Tests.
Charging
Charging Rates, Types of Chargers
Battery Troubles and Remedies
Care and Servicing, Repairs, Lead Burning, Shop Equipment
Edison Nickel-Iron Cells
Construction, Advantages, Principles
Charging, Care, Servicing

ELECTRIC STORAGE BATTERIES

Storage batteries are used by the millions in automobiles, radios, telephone and telegraph systems, railway signal systems, electric trucks, train lighting, farm lighting plants, and for emergency power reserve in substations and power plants.

These batteries require charging, testing and care, and although they are very rugged in their construction, they require occasional repair due to the natural wear occurring on their elements by charging and discharging in normal use. So there are numerous opportunities for trained men in electric storage battery work.

It is also very easy for one to start a nice, profitable, small business of their own with very little capital in the repairing and servicing of automobile and radio batteries.

Fig. 1 shows a neat installation of storage batteries such as used for emergency lighting in public buildings, or with farm lighting plants.

Fig. 2 shows a single cell of a large power storage battery such as used in substations and power plants for supplying thousands of amperes during short periods.

You have already learned the principles of primary cells or batteries and how electric current can be produced by immersing unlike metals in an acid solution. It has also been explained previously that storage batteries are different from primary batteries in that they require charging before they are ready to supply electricity.

1. LEAD-ACID CELLS. PLANTÉ PLATES

One of the most common types of storage batteries is known as the **lead plate** battery. This is the type that is used almost exclusively in automobiles, for battery operated radio sets, and in large power plant batteries.

In 1860 a Frenchman named Gaston Planté discovered the principles of the lead plate storage cell. He found that if two strips of pure lead were immersed in an electrolyte of dilute sulphuric acid, a thin coating of **lead sulphate** would soon be formed on the surfaces of these plates.

He then discovered that by passing current through the cell the lead sulphate on the plate by which the current entered the solution would be changed to **lead peroxide,** or a compound of lead and oxygen. The lead sulphate on the other plate by which the current left the solution changed to **pure lead** in a spongy form. The term **sponge lead** is generally used in describing lead in this condition.

Thus the unlike materials required to produce the action in a cell were created by electrolytic action on lead plates which were formerly both alike.

After thus charging the cell, Planté found that it would give off current in the opposite direction. While discharging, the lead peroxide on one plate and the sponge lead on the other are again changed back to lead sulphate, and when all of the lead peroxide and sponge lead are changed back to lead sulphate, the plates are alike again and will not supply any more current.

However, if charged again by having current passed through them in the same direction as at first, the plates can again be made unlike and the cell brought back to charged condition, ready to produce current once more.

The lead peroxide plate from which the current flows during discharge is called **positive,** while the sponge lead plate at which the current enters during discharge is called **negative.**

From this we see that when charging a lead plate storage cell the **charging current does not store electricity in the cell** but merely makes the plates unlike by changing them chemically.

When a load or closed circuit is connected across the terminals of such a cell, current flows in the opposite direction to that in which the charging current flowed, and as the unlike material on the lead plates is gradually changed back to lead sulphate the voltage across the cell terminals becomes lower and lower, reaching zero when all of the material is reduced to lead sulphate and both plates are again the same.

The positive and negative plates for storage cells of the Planté type both consist of a sheet of pure lead, with grooves or corrugations on each side to increase the active area in contact with the electrolyte and thereby increase the capacity of the cell.

2. PASTED PLATES

One of the disadvantages of the Planté plate storage cell was in the fact that the lead plates being non-porous had to be charged and discharged a considerable number of times before the coating of active material was of sufficient thickness to give the required capacity. This charging and discharging process was known as **forming** and was too lengthy and costly a process to make batteries of this type commercially practical.

To overcome this difficulty another Frenchman named Camile Fauré produced battery plates of pasted construction in 1880, and these plates turned out to be so much more efficient that they are the type still used in modern lead plate storage batteries.

Pasted or Fauré plates consist of a grid or framework of **lead** and **antimony,** upon which is applied a paste of **lead oxide.** The antimony is used

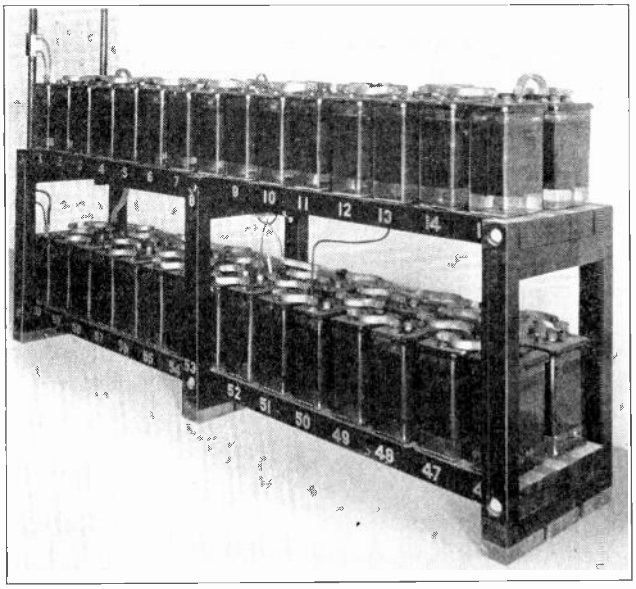

Fig. 1. This photo shows a large group of lead plate storage cells in glass jars. This battery installation is typical of those used for emergency lighting or farm lighting service, or for signal work. (Courtesy of Electric Storage Battery Co.)

with the lead to increase its mechanical strength and also to prevent the chemical action during charging and discharging from converting the grid into active material, as it would if pure lead only was used.

Fig. 3 shows a standard grid with a square mesh, and Fig. 4 shows a grid of the diamond type as used by one of the leading battery manufacturers.

The original Fauré plates had both positive and negatives pasted with **red lead.** In modern batteries **litharge** is also used with the red lead. The chemical term for red lead is: Pb_3O_4, and that for litharge is PbO.

The paste commonly used for positive plates contains a large percentage of red lead while that used for the negative plates contains a large percentage of litharge. **Lamp black** is often added to the negative plate to increase its porosity, as the negative plates tend to be rather dense on account of the large amount of litharge used in the paste.

The finished positive and negative plates are easily distinguishable by their difference in color, **the positives being of a dark brown color** and **the negatives dark gray in color.**

The upper part of Fig. 5 shows a positive plate on the left and a negative plate on the right. Note the difference in their color and also note the manner in which the paste is pressed into the grid flush with the surface so that both sides are smooth.

The lugs provided on the top corners of the plates are for attaching the terminals or group connectors to the cell.

In the lower part of Fig. 5 are shown a positive plate group and a negative plate group attached together by their connectors and terminal posts, and ready to place in the cells.

New battery plates for repairing worn out ones are generally purchased from some battery supply company, as the plates can be made much cheaper in factories equipped for this work than they can in the average repair shop However, a general knowledge of plate construction and manufacture will be found interesting and possibly very valuable at some time or other; particularly if you should obtain a position in a battery manufacturing concern.

The following formula gives the materials commonly used in making the paste or active material for lead plates:

PLATE PASTE FORMULA

(Parts by weight)

POSITIVE	NEGATIVE
Red lead, 5 parts	Litharge, 5 parts
Litharge, 1 part	Red lead, 1 part
1.120 S. G. electrolyte, 1 part	1.150 S. G. electrolyte, 1 part
	1 ounce of lamp black per 100 lbs. of litharge.

As lead oxides are dry powders some liquid must be used to mix them into a paste so they can be applied to the grids. Dilute sulphuric acid is generally used for this purpose. When mixed with the lead oxides the sulphuric acid causes a chemical action to take place which changes part of the oxides to lead sulphate, causing the paste to harden rapidly, so that it is necessary to work fast when applying paste to the grids.

In making battery plates the paste can be applied either by hand or by special machines made for this

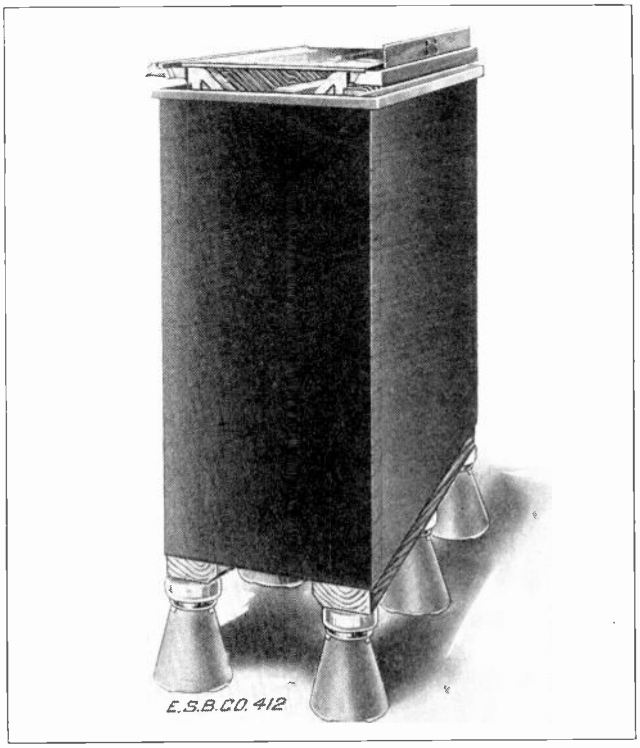

Fig. 2. Large lead plate storage cell in which the plates are supported inside of a lead lined wood tank which is in turn supported on insulators. Cells of this type are commonly used for emergency power and for D. C. control busses in power plants. (Courtesy of Electric Storage Battery Co.)

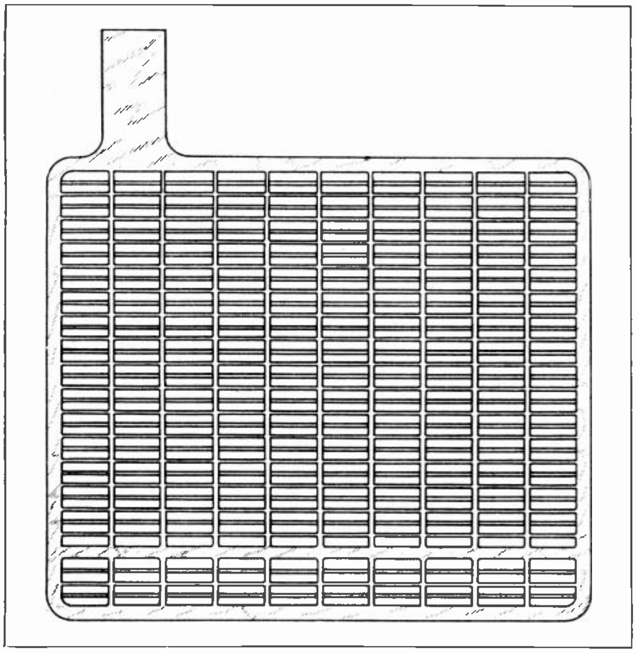

Fig. 3. The above drawing shows the construction of one common type of grid used for pasted plates. This drawing shows the grid before the paste has been applied.

work. When done by hand the pasting is generally done on a glass or marble covered table with sheets of blotting paper being placed between the grids and the table top. The paste is then applied to the grids from the top by means of a trowel, pressed firmly into the grid, and smoothed off flush with the surface.

After pasting, the plates are dried in a rack by circulating air over and around them at room temperature. The drying causes the paste to set and become hard and at the same time cements it firmly to the grid. As soon as the plates are dried they are ready for forming.

3. FORMING OF PLATES

We mentioned previously that it was necessary to **form** or condition lead plates of the Planté type by charging and discharging them. It is also necessary to form pasted plates by giving them one prolonged charge that changes the oxides of the paste into active material.

For forming the plates are assembled into groups, the positives together in one group and the negatives in another, and the plates separated far enough apart so that separators are not necessary between them.

These two groups are then placed in a tank filled with 1.150 specific gravity electrolyte, with the positive and negative plates in alternate positions, or one negative between each positive and the next, the same as they are arranged in the finished battery.

Direct current from a D. C. generator or line is then passed through the forming tank, being careful to connect the terminals so that the current flows into the tank at the positive plates and out at the negative plates. In other words connect the positive terminal of the line or generator to the positive plate group.

The paste in the positive plates where the current enters will be changed to lead peroxide or PbO_2, while the paste on the negative group at which current leaves will be changed to sponge lead or Pb.

When the electrolyte begins to gas or bubble quite freely and the voltage between the positive and negative groups tests between 2.1 and 2.2, the plates are fully formed.

When the forming process is completed the plates are dried and are then ready for use in a battery.

4. STORAGE BATTERY CONSTRUCTION AND PARTS

So far we have discussed only the plates, which are the most important part of any storage battery. To complete the battery, however, requires a number of additional parts, such as **container, jars, separators, connector straps, terminals, cell covers,** etc.

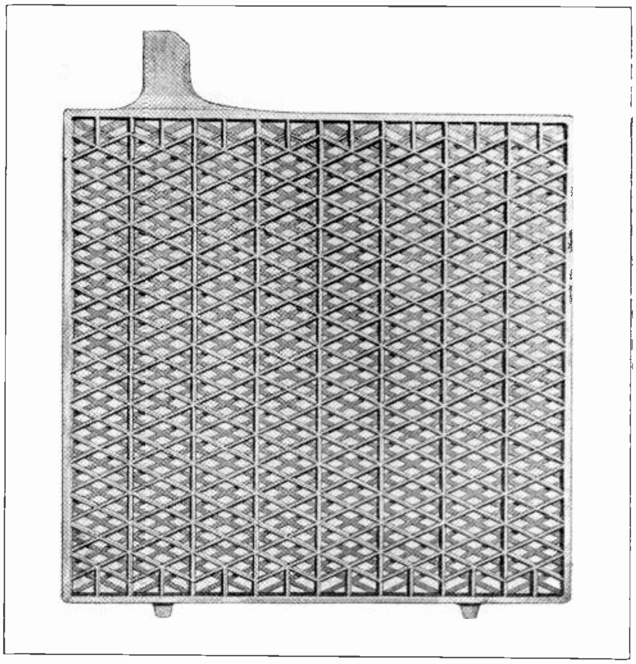

Fig. 4. Photo of another type of grid of the diamond type construction. The lead bars serve both as a frame to hold the paste or active material and as conductor to carry the current from the active material to the plate lug. (Courtesy of Philadelphia Battery Co.)

Fig. 6 shows a number of these parts required for a complete battery. On the extreme left and in the background is a complete cell and in front of this and to the right are shown two more positive and negative groups assembled together. In the center is shown a wood battery box or case and in front of it a stack of wood separators and two cell connector straps. On the right are shown two empty cell containers or jars with their covers and vent caps.

In constructing a storage battery of the lead plate type a number of positive plates are connected together by burning or welding them to a lead connector strap equipped with a terminal post, as shown in the lower left view of Fig. 5.

The number of plates selected depends on the size and capacity of the cell to be built. The greater the number or total area of the plates the greater will be the capacity of the cell.

A group of negative plates consisting of one more than the number of positives is then fastened together in the same manner and the positive and negative groups meshed together, as shown in the left foreground of Fig. 6.

The reason for always having one more plate in the negative group of a cell than in the positive group is because the capacity of cells is rated and determined according to the number and size of positive plates, and in order to work both sides of the positives it is necessary to have a negative plate on each outer side of the positive group, and this requires one additional negative in each cell.

The voltage of any single cell or group of positive and negative plates is slightly over 2 volts in the ordinary lead plate battery when fully charged. The standard automobile battery consists of three such cells connected in series, and develops 6 volts. Twelve-volt batteries have been used to some extent for automotive work but are rapidly becoming obsolete, because of the tendency of car manufacturers to standardize on six-volt starting and lighting systems.

Fig. 7 shows three groups of positive and negative plates assembled together for a three-cell battery. Such positive and negative groups are called **elements.**

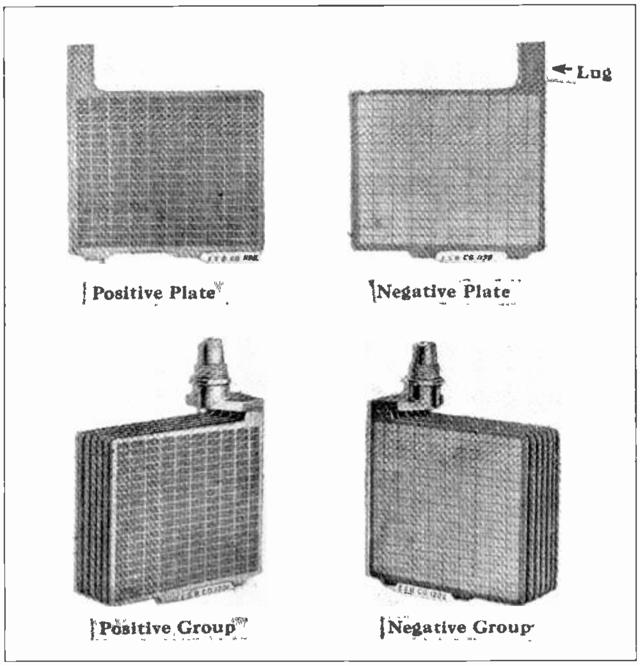

Fig. 5. The above views show completed or pasted plates of both positive and negative types. Single plates are shown above, and below the plates are shown grouped or connected together to the cell terminals. (Courtesy of Electric Storage Battery Co.)

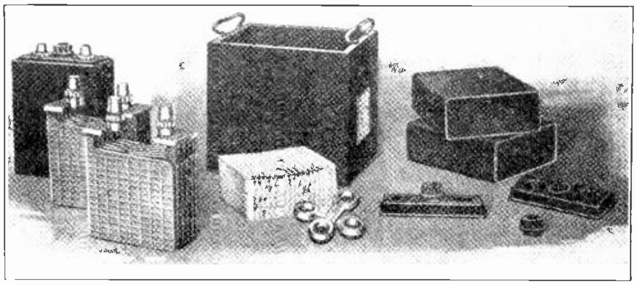

Fig. 6. This view shows the more important parts of a lead plate storage battery for automotive use. Note carefully these various parts when reading the accompanying paragraphs. (Courtesy of Universal Battery Co.)

5. SEPARATORS

After the positive and negative groups are fitted together as explained the positives must be insulated from the negatives by inserting thin wood or rubber **separators** between them.

These separators are used to keep the plates from touching each other and thereby forming internal short circuits. The separators must be porous so the electrolyte can pass through them and so that they will offer the least resistance to the passage of current. They must also be designed to allow free circulation of electrolyte over the surface of the positive plates.

Although separators are made of both wood and rubber the wood separator is most generally used. Cedar and cypress separators are generally used because of their porosity which reduces the internal resistance of the cell, and because of their ability to resist the action of the acid in the electrolyte.

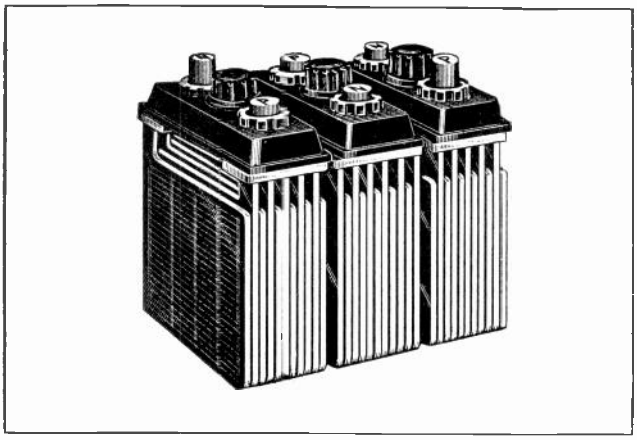

Fig. 7. Above are shown three groups of positive and negative plates assembled together and ready for separators before being placed in the cells of a battery.

Separators made of basswood and of hardwood are also sometimes used.

Separators are provided with grooves on one side and when inserted between the plates **they should always be placed with the grooved side next to the positive plates** and **with the grooves running vertically,** or up and down, so as to provide free circulation of the electrolyte.

After being sawed and grooved, cedar and cypress separators are always treated in a hot alkaline solution and then washed thoroughly. The purpose of this treatment is to remove certain substances from the wood which would otherwise form acetic acid if not removed. Acetic acid interferes with proper chemical action in the battery and may also damage the battery as it tends to corrode the lead. Sometimes plate lugs are so weakened and corroded due to presence of this acid that the plates drop off the lugs. The treatment also tends to increase the porosity of the separators and thereby reduce their resistance to the passage of current through the cell.

As the separators are treated at the factory where made they are shipped wet or damp and **must be kept damp until they are put into service.** If they are kept in water a small quantity of sulphuric acid should be put in the water to prevent the separators from becoming slimy or moldy.

Fig. 8 shows several different styles of wood separators with grooves of different sizes and various spacings.

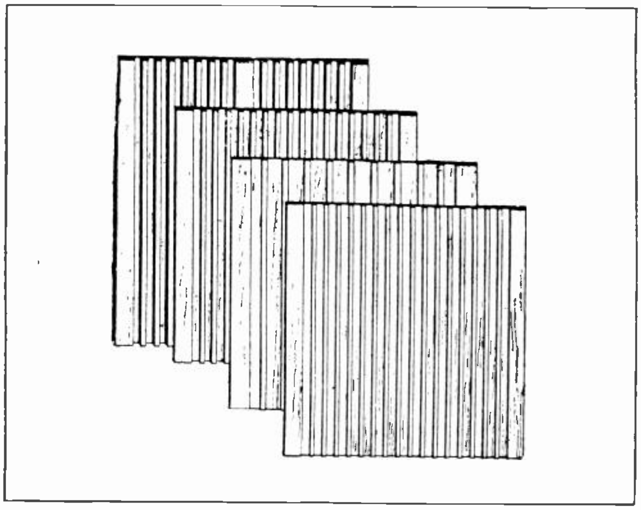

Fig. 8. Several different sizes of wood separators with different types of grooves. These separators are used to insulate the positive and negative plates from each other and prevent them from short circuiting within the cells.

When separators are fitted between the positive and negative plates they should be trimmed and set so that their tops will come at least 3/16 or ¼ of an inch above the tops of the plates, in order to prevent short circuits that might otherwise be caused by foreign material dropping in the cell through the vent opening when the vent plugs are removed.

Special cutters or separator trimmers can be obtained for trimming wood separators to proper size. A separator trimmer consists of a flat board with a knife attached to its edge by a hinge, so that separator edges can be sheared off by placing them on the board under the knife.

Another type of separator developed by the Willard Storage Battery Company is known as the **threaded rubber** separator. This separator is made of a thin sheet of hard rubber which has a large number of short threads placed crosswise through the rubber when the separator is molded. These threads number over 6000 to the square inch and serve as wicks to allow the electrolyte to circulate through the separator, and also to afford a path for the passage of current through the acid soaked threads.

The threaded rubber separator has ribs or corrugations on one side which correspond to the grooves on wood separators. When installed between the plates the ribbed side of the rubber separators must be placed next to the positive plates with the ribs running vertically, or up and down.

6. RETAINERS AND ISOLATORS

Some battery makers use thin perforated sheets of hard rubber about 1/64 of an inch thick, which are placed between the ribbed side of the wood separator and the positive plates. These thin rubber sheets are called **retainers** and are used to prevent the active material from shedding or falling out of the grid of the positive plates.

These retainers, however, have the disadvantage of a tendency to clog up, and thus increase the internal resistance of the cell.

One large battery manufacturing company uses additional notched strips of hard rubber which are fitted into slots cut in the edges of the grids. These strips are called **Isolators** and are for the purpose of locking the edges of the plates rigidly in position to prevent warping and distortion of the plates with age or severe use.

The use of these isolators doesn't eliminate the necessity for separators but the isolators give a great deal of added strength and rigidity to the plate groups, and prevent the plates buckling and cutting

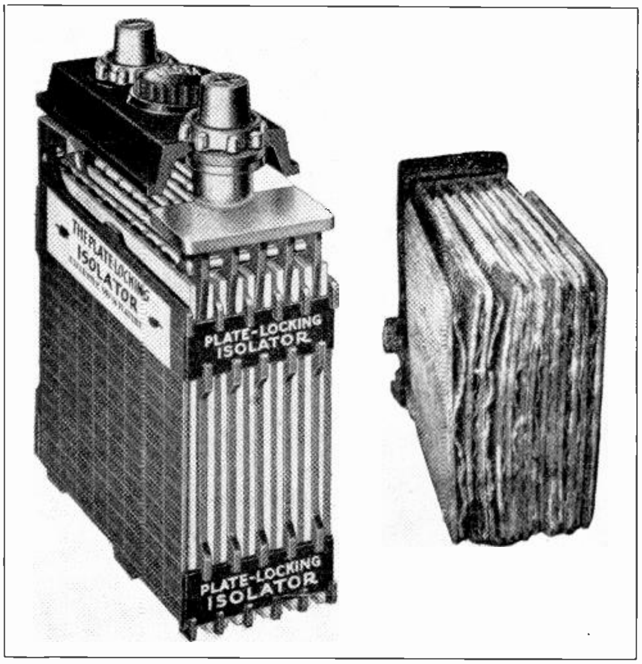

Fig. 8A. This photo shows on the left an excellent view of a cell element equipped with isolators for holding the plates in position and preventing warping or buckling; and on the right is shown a group of badly warped plates which were not equipped with isolators of this type. (Courtesy of Vesta Battery Co.)

through the separators where the plate corners would otherwise become warped against them.

When a separator becomes worn through by pressure from warped plates it allows the plates to short circuit and puts the cell out of commission.

The view on the left in Fig. 8-A shows an element or group of positive and negative plates equipped with isolators, and on the right in this same figure is a group of badly warped plates showing what may happen to a plate group that is not equipped with isolators.

The position of the wood separators and the manner in which their tops are allowed to project slightly above the plate tops are also shown in the left view of Fig. 8-A.

Isolators were formerly made from celluloid, but the disadvantage of this material was its tendency to melt or dissolve at high temperatures, so hard rubber is the material now used.

7. CELL CONTAINERS AND BATTERY CASES

After an element or group of positive and negative plates has been assembled with separators it is ready to be placed in the cell container. Each cell must, of course, be insulated and separated from the other cells in the battery, and the containers used for this purpose must be acid-resistant and able to withstand a certain amount of mechanical abuse and vibration.

Hard rubber meets this condition very well as it resists the action of the acid and is fairly tough and strong. Glass is also acid resisting and can be used in the construction of batteries for stationary use where they are not subjected to any mechanical abuse or severe vibration.

Fig. 9 shows a hard rubber jar or cell container on the left and a rubber jar cover on the right. Ribs or ridges about one inch high are provided in the bottoms of these jars to strengthen them and also to keep the plates up off the bottom of the cell, and prevent their being shorted by any active material which may shed from the plates during use and settle to the bottom on the container. The ribs in the jar bottoms form spaces in which this loosened active material settles and prevent it from reaching the lower edges of the plates.

Until recent years automotive battery cell groups or elements were all placed in individual jars of this type and the three or six jars, or complete cells, then mounted in a wood box such as shown in the left in Fig. 10.

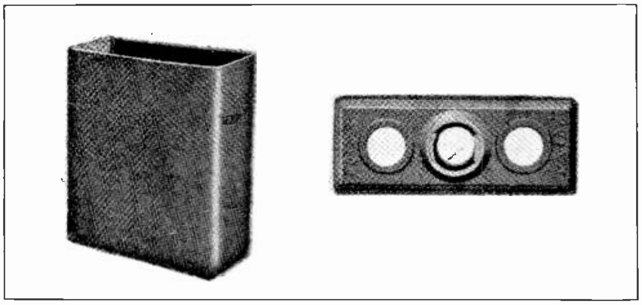

Fig. 9. This view shows a common type of hard rubber cell jar and cover such as used in automobile batteries with wood cases.

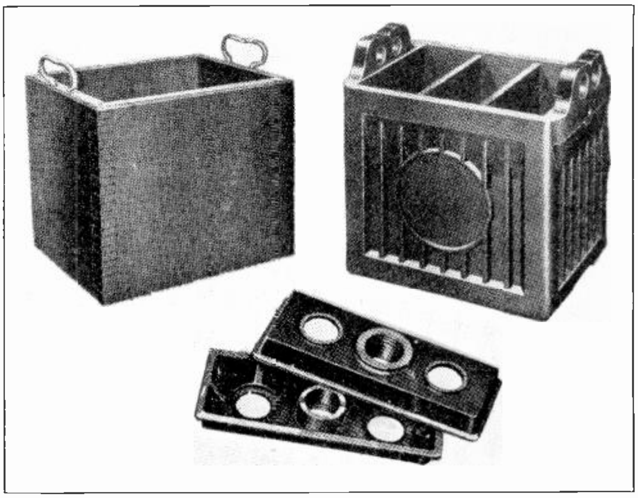

Fig. 10 Above are shown two types of cases commonly used with automobile batteries. The one on the left is made of wood and the one on the right is made of molded hard rubber. Two-cell covers are shown beneath the cases.

Wood battery cases have the disadvantage of being subject to rotting and rapid deterioration due to the action of the acid fumes or any acid spilled upon them. Their life can be greatly prolonged by coating the wood with acid-proof paint, but even then wood cases are not very satisfactory for automotive batteries or other uses where they receive rough treatment.

A much better battery case which has come into very general use for automotive and radio batteries in the last few years is the hard rubber case, such as shown on the right in Fig. 10. These cases are not affected by acid and, therefore, last much longer than wood cases and they are very strong and compact.

You will note that the cell partitions of hard rubber are built right into these cases so they do not require separate cell jars but are complete when fitted with rubber cell covers, such as shown beneath the cases in Fig. 10. These covers are used to close the tops of the cells and keep out dirt, water, etc., and to prevent spilling of the electrolyte.

The covers are each provided with three openings. One in the center for the vent and filler cap and one near each end for the terminal posts of the plate groups to project out to the connectors. The sides of the covers are so shaped that when they are installed in a jar or case a V-shaped space or groove is formed all around their edges between the cover and the side of the battery. Into this groove is poured hot sealing compound which hardens as it cools and forms an acid-resistant seal between the cover and container.

Fig. 11 shows two complete automobile batteries. The one above being built in a wood case and the one below in a rubber case.

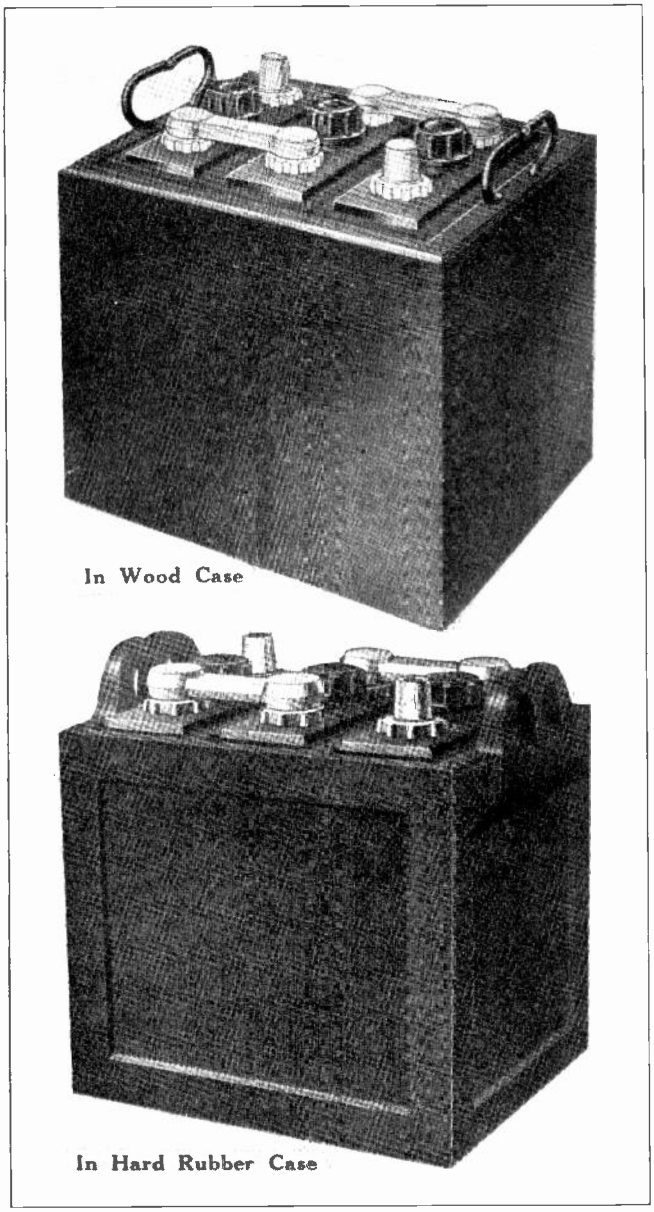

Fig. 11. Top view shows a completed wood case battery of the 3-cell, 6-volt type, and below is shown a complete battery of the same type but in a rubber case.

8. ELECTROLYTE

After a new battery is completed or an old one repaired each cell must be filled with electrolyte, and **the level of this electrolyte should always be kept from $\frac{3}{8}$ to $\frac{1}{2}$ inch above the tops of the plates.**

The electrolyte used in lead plate storage batteries consists of chemically pure sulphuric acid (H_2SO_4) and distilled water. A commercial grade of acid should never be used, as it contains certain impurities which may cause local action and rapid deterioration of the battery plates even when the battery is not in use. For the same reason distilled water only should be used, as ordinary well water or water from a faucet contains chemicals that are detrimental to battery action and life. You will recall from an earlier article on primary cells that local action is caused by impurities in the plates or electrolyte, setting up local short circuits or small active cells at various spots on the plate surface wherever the impurities lodge or collect.

9. SPECIFIC GRAVITY

The term **specific gravity** has already been mentioned and is one with which we should become thoroughly familiar at this point. Specific gravity refers to specific weight of any liquid or substance compared to the weight of an equal volume of pure water, or, in other words, the ratio of the weight of the substance to the weight of an equal volume of water.

The specific gravity (S. G.) of pure water is assumed to be 1, usually written 1.000, and is used as a standard for comparing the weights of similar volumes of other materials and thus establishing their specific gravity.

One pint of water weighs approximately one pound and one pint of sulphuric acid weighs 1.835 pounds. So we say the specific gravity (S. G.) of sulphuric acid is 1.835. This shows us the acid is about 1.8 times heavier than water.

10. HYDROMETERS

The specific gravity of any liquid can be easily and quickly determined by means of a device called a **hydrometer.**

Fig. 12 shows a hydrometer on the left, and in the view on the right one of these devices is shown in use to test the specific gravity of the electrolyte in a battery.

A hydrometer consists of a glass tube syringe containing a small float inside of the glass tube as shown in Fig. 12. The float is weighted at the bottom end so that it will float upright when the outer

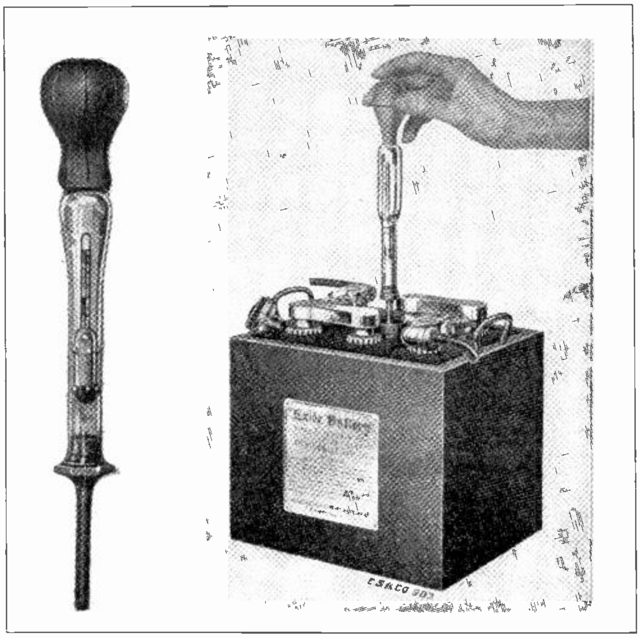

Fig. 12. On the left is shown a common battery hydrometer. Note the small float within the glass barrel of the hydrometer and also the rubber bulb on the top for drawing in the electrolyte. The view on the right shows the method of using a hydrometer for testing the electrolyte of a battery.

tube is filled with liquid which has been drawn in by the rubber bulb. The upper end of the float is marked with a graduated scale from 1.100 to 1.300 for ordinary automotive battery testing.

In speaking of specific gravity or hydrometer readings taken of battery electrolyte, instead of stating the figure in full as a fraction, we generally drop the decimal and shorten the expression. For example the reading 1.200 would be called twelve hundred, and the reading 1,275 called twelve seventy-five, etc. The decimal is also commonly left out of the figures marked on the scales of battery hydrometers.

In order to indicate the specific gravity of the liquid which is drawn into the hydrometer tube, the float is weighted just the right amount so that it would float in water with the mark 1 just at the surface of the water. Sulphuric acid being heavier than water the float will not sink as far in the acid but will float higher, and the specific gravity of the acid can be read at the float mark which is at the surface of the acid.

In using a hydrometer the bulb is depressed and the syringe tip immersed in the liquid to be tested. Releasing the bulb then draws the large glass tube partly full of liquid and causes the float to rise. Care should be taken to see that the float doesn't stick to the glass tube but rises freely in the liquid. If too much liquid is drawn into the hydrometer the top of the float may be held against the top of the syringe tube or up in the bulb, and some of the liquid should be forced out so that the float will ride freely at a convenient level for reading.

As the amount of acid in the electrolyte of a storage battery varies during charge and discharge and thereby varies the gravity of the electrolyte, hydrometer readings are a good indication of the state of charge. This method of testing will be explained later.

11. PREPARATION OF ELECTROLYTE

In preparing electrolyte for lead plate storage batteries for automobile use sufficient water is mixed with the sulphuric acid to bring its specific gravity to about 1.280 or 1.300 according to the strength desired. Sulphuric acid can be obtained in the concentrated form (1.835 specific gravity) but is more generally supplied partly diluted to 1.400 specific gravity for use in preparing battery electrolyte.

When mixing concentrated or 1.835 S. G. sulphuric acid and distilled water **always add the acid to the water slowly, and stir the solution continuously while adding.**

If the water is added to the acid the mixture will heat so violently that it may break the container and injure the operator, or the violent boiling may splash acid in one's eyes.

Sulphuric acid even in its diluted form in battery electrolyte is very injurious to clothing and will burn the skin of the hands if not immediately washed off. Strong sulphuric acid is very dangerous if carelessly handled and allowed to splash into the eyes or on the face and hands of the operator. Ammonia and strong soda water are good neutralizers for this acid, and should always be on hand and immediately used to wash off any acid from the flesh or clothing in case of an accident.

Mixing of electrolyte should be done in an acid-proof container of hard rubber, glass, earthenware, or lead. A wooden paddle or glass rod should be used to stir the solution. Don't use metals for this purpose.

The electrolyte should be allowed to cool below 90° F. before being put in battery cells.

When preparing electrolyte with prediluted sulphuric acid of 1.400 S. G. and distilled water it doesn't matter which one is poured into the other, but care should be used not to mix large quantities too fast and it is well to stir the solution while mixing.

MIXING ELECTROLYTE BY VOLUME		
WATER	DILUTED ACID	Sp.Gr. OF ELECTROLYTE
ADD 3½ PINTS OF DISTILLED WATER	TO 1 GAL. OF 1.400 ACID	FOR 1.300 ELECTROLYTE
" 4½ " " " "	" 1 " " " "	" 1.280 "
" 5 " " " "	" 1 " " " "	" 1.275 "
" 5¼ " " " "	" 1 " " " "	" 1.260 "

Fig. 13. This convenient small table shows the amount, by volume, of water and acid to be mixed together to produce battery electrolyte of four different strengths.

A convenient table for preparing battery electrolyte from 1.400 S. G. acid is shown in Fig. 13. This table shows the number of pints of distilled water to be added to each gallon of 1.400 acid to produce electrolyte ranging from 1.300 to 1.260 S. G.

Another convenient table for mixing electrolyte ranging from 1.120 S. G. to 1.400 S. G. from concentrated acid of 1.835 S. G. is shown in Fig. 14. This table gives the amounts of water both by volume and by weight so that either method of measuring can be used according to which is most convenient. The table also gives in the last column the percentage of sulphuric acid in the electrolyte solution.

12. TEMPERATURE CORRECTION

You will note that in the table in Fig. 14 the temperature of both the acid and electrolyte is speci-

MIXING TABLE			
SPICIFIC GRAVITY OF SOLUTION OR ELECTROLYTE AT 70° F.	PARTS OF WATER TO 1 PART OF C.P. SULPHURIC ACID 1.835 SP. GR. AT 70°F.		PERCENTAGE OF SULPHURIC ACID IN SOLUTION
	BY VOLUME	BY WEIGHT	
1.120	8.00	4.40	17.40
1.150	6.15	3.35	21.40
1.180	4.95	2.70	25.20
1.200	4.33	2.36	27.70
1.220	3.84	2.09	30.20
1.250	3.22	1.76	33.70
1.270	2.90	1.57	36.10
1.280	2.75	1.49	37.30
1.300	2.47	1.34	39.65
1.350	1.95	1.06	45.20
1.400	1.56	0.84	50.50

Fig. 14. This table shows the amounts, both by volume and by weight, of water and full strength acid which should be mixed together to produce electrolytes of different specific gravities.

fied to be 70° F. This temperature is mentioned because all hydrometer readings are based on an electrolyte temperature of 70° F., due to the fact that at other temperatures the readings will change, because the liquid expands and becomes lighter for a given volume when heated and contracts and becomes heavier when cooled.

As the weight or density of the liquid determines the height at which the hydrometer float will rest in the liquid and the reading which will be obtained, we can readily see that the temperature of the electrolyte will affect the hydrometer readings.

This is a very important point to remember when making hydrometer tests on electrolyte during mixing, or on the electrolyte of batteries that may have become overheated during use or charging, or that may be extremely cold or warm due to climatic conditions.

For correcting hydrometer readings according to the temperature of the electrolyte a device called a **correction thermometer** is commonly used. Fig. 15 shows a thermometer of this type which can be inserted in the electrolyte when mixing or into the electrolyte of the battery through the vent opening.

This correction thermometer has two scales. The scale on one side being used for the temperature readings and the one on the opposite side is the correction scale.

The reading on the correction scale at the point where the thermometer indicator line rests will give the number to add to or subtract from the hydrometer readings to get the corrected reading. The scale also shows by a + or − sign before each figure whether the number should be added to or subtracted from the hydrometer reading.

A convenient rule to use in making temperature corrections when a correction thermometer is not available but the temperature of the battery or electrolyte is known is as follows:

For every three degrees above 70° F. one point is added to the hydrometer reading, and for every three degrees below 70° F. one point is subtracted from the hydrometer reading.

For example, if we have electrolyte at a temperature of 100° F. and the hydrometer shows a reading of 1.270, then the electrolyte temperature being 100°, or 30° above 70°, we will divide 30 by 3 and find that 10 points must be added for correction of the hydrometer reading. Then 1.270 plus 10 = 1.280 or the correct gravity reading.

13. CHEMICAL ACTION IN CELLS DURING CHARGE AND DISCHARGE

In order that you may more fully understand some of the tests used with storage batteries and be able to recognize certain trouble symptoms and give the batteries the proper care, it will be well at this point to consider the action that takes place within the cells while they are charging and discharging.

It is also particularly valuable to know the condition of the plates and electrolyte both in charged and discharged condition. Let us start first with a new battery that is fully charged and consider the action that takes place during discharge.

When a lead plate battery is **fully charged** the active material in the positive plates is in the form of **lead peroxide** and is brown in color. In the negative plates the active material is in the form of **sponge lead** which is gray in color. The electrolyte will be at **maximum density** which is **between 1.280 and 1.300 S. G.** for automotive batteries.

With the battery in this condition the **open circuit voltage** of each cell will be **between 2.1 and 2.2 volts.** Now if the cell is connected in a closed electrical circuit current will flow due to this voltage or pressure, from the positive terminal of the cell through the circuit, and back to the negative terminal.

As the cell discharges certain chemical changes take place within it. **The acid in the electrolyte is gradually absorbed by the plates** in the process of changing the lead peroxide and sponge lead into lead sulphate. Thus the plates which were unlike when the cell was charged tend to become alike on discharge, or both change to lead sulphate.

The specific gravity or density of the remaining electrolyte decreases in proportion to the acid absorbed by the plates, so as the discharge progresses the electrolyte becomes weaker and weaker. When the specific gravity shown by the hydrometer reading drops to 1.150 if we test the cell voltage with a voltmeter you will find that it is down to about 1.7 or 1.8 volts, and we then consider the cell discharged.

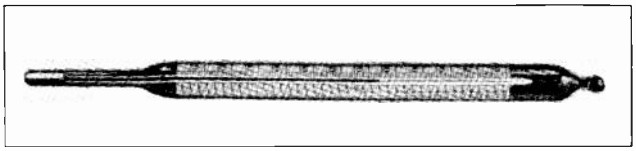
Fig. 15. Convenient type of battery thermometer for making corrections in hydrometer readings according to temperature of electrolyte.

So we find that in a discharged cell we have two conditions to observe. First, the active material on both plates has been changed to lead sulphate. Second, the density or specific gravity of the electrolyte is very little above that of pure water. It is, of course, possible to obtain considerable current from a battery after the cell voltage has dropped below 1.7, but it is generally not considered practical and is not good for the battery to discharge it much below this point. So when the voltage drops this low and the hydrometer readings show about 1.150 the batteries should be recharged.

During charging a reverse action to that which occurred during discharge takes place. To charge a cell direct current is sent through it in a direction opposite to the flow of current when the cell was discharging. This causes **the sulphuric acid to be driven out of the plates back into the electrolyte,** thus raising the density or specific gravity again. At the same time the lead sulphate in the positive plates is changed back into **lead peroxide** and the lead sulphate on the negative plates changed back into **sponge lead.**

When practically all of the acid has been driven out of the plates and the lead sulphate converted into lead peroxide and sponge lead the cell is said to be **fully charged,** and should show **a specific gravity reading of between 1.280 and 1.300** and a **cell voltage of 2.1** and **2.2 on open circuit test.**

When the cells are fully charged some bubbling or "gassing" of the electrolyte will be noticed. This is due to the fact that when the charging current has no more lead sulphate to work on, it will convert the water in the electrolyte into hydrogen and oxygen gas which will come to the surface of the electrolyte in the form of small bubbles, thus indicating that the cell is about fully charged.

14. CHEMICAL TERMS AND FORMULAS OF BATTERY ACTION

While it is of no great importance to the average battery service man to know the exact chemical reaction that takes place within the batteries during charge and discharge, it is often very interesting to know this action as described in chemical terms.

The chemical reaction which takes place in the cell during charge and discharge can be described as follows:

We know that the electrolyte is composed of sulphuric acid and water, or H_2SO_4, the H_2 representing two parts of hydrogen gas, S one part of sulphur, and O_4 four parts of oxygen. The lead peroxide on the positive plates consists of PbO_2, in which Pb represents one part of lead and O_2 represents two parts of oxygen. The sponge lead on the negatives can be represented by the chemical symbol Pb which is one part of lead.

The lead sulphate which is formed on both positives and negatives during discharge is designated by the symbol $PbSO_4$, in which Pb represents one part of lead, S one part of sulphur, and O_4 four parts of oxygen.

The action which takes place in the positive plate during discharge, or the uniting of the lead peroxide with hydrogen and sulphuric acid from the electrolyte, can be chemically explained as follows:

$PbO_2 + H_2 + H_2SO_4 = PbSO_4 + 2\ H_2O$.

The action on the negative plates during discharge, or the uniting of sponge lead with sulphuric acid to form lead sulphate, is described as follows:

$Pb + SO_4 = PbSO_4$.

The action on the positive plate during charging and when current is sent backwards through the solution and plates, causing the chemical elements to reunite into their original form, is as follows:

$PbSO_4 + H_2O + O = PbO_2 + H_2SO_4$.

The action on the negative plate during charge is $PbSO_4 + H_2 = Pb + H_2SO_4$.

As previously stated no particular effort needs to be made to study these chemical formulas, and they are given here only for convenient reference in case special questions arise regarding them.

15. BATTERY TESTS

There are a number of different tests which can be made easily with hydrometer, voltmeter, ammeter, etc., to determine quite accurately the condition of lead plate storage batteries. These are of particular value for the practical battery service man to know.

This Section should be carefully studied until you are sure you are thoroughly familiar with methods of making each test and the battery conditions indicated by them.

One of the most commonly used tests on storage batteries is the gravity test which is made with a hydrometer as previously described. In the preceding article we found that the specific gravity of the electrolyte in a battery changes considerably as the battery charges or discharges.

The **gravity increases** as the acid is driven out of the plates and into the solution **during charge,** and **decreases** as the acid is absorbed from the electrolyte by the plates **during discharge.** So we can readily see that a hydrometer reading taken at any time will indicate the approximate condition of charge or discharge.

Automotive batteries are commonly made so that when they are **fully charged** the specific **gravity of the electrolyte will be 1.280 to 1.300,** and when the **gravity drops to 1.150** they are considered to be **practically discharged** and should be put on charge immediately as **it is very harmful for a battery to stand in a discharged condition.**

Automotive batteries built for use in tropical climates are made so that they are fully charged at about 1.200 S. G. The reason for this is that in such climates there is no danger of freezing, and the electrolyte being always warm is more active.

Furthermore electrolyte of the same acid strength will give a lower gravity reading because of its expanded and less dense condition at the warm temperatures.

The convenient chart in Fig. 16 shows the conditions indicated by various gravity readings. Fig. 16-A shows the position of a hydrometer float in

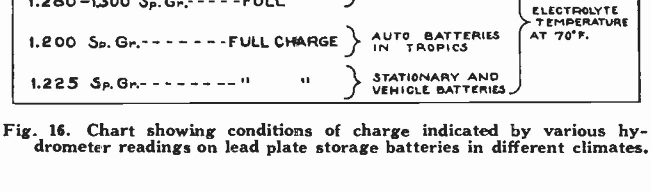

Fig. 16. Chart showing conditions of charge indicated by various hydrometer readings on lead plate storage batteries in different climates.

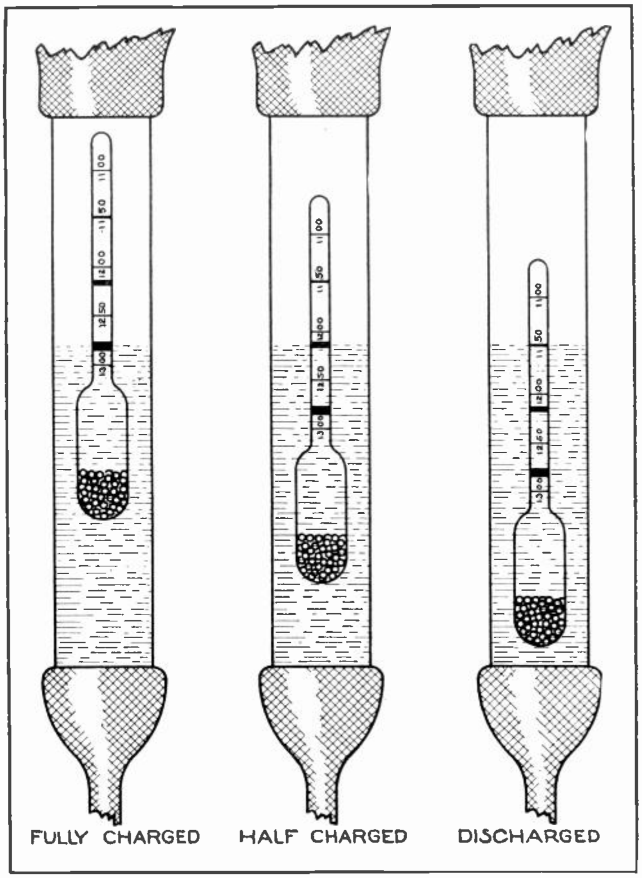

Fig. 16A. This drawing clearly shows how to read an ordinary battery hydrometer. Study each of the three views very carefully while reading the accompanying explanation.

three samples of electrolyte taken from charged, half charged, and discharged batteries. Careful observation of the hydrometer sketches in this figure will be of great assistance in learning to properly read these devices.

16. VOLTAGE TEST

While the hydrometer test must be used to determine the condition of the electrolyte and is generally a rather good indication of the state of charge of a battery, it is not altogether reliable for this latter purpose.

We know that there should always be a definite relation between the voltage of a cell and the specific gravity of its electrolyte, but in some cases the gravity of the electrolyte may have been altered by adding strong acid or by replacing a large quantity of spilled electrolyte with distilled water.

In either of these cases a gravity reading would not be an accurate indication of the true condition of the cell. So a voltage test made by connecting the terminals of a low-reading voltmeter across a cell or battery is a more reliable means of determining whether the battery is fully charged or not, and whether the positive and negative plates have been made as unlike as possible by the charging current; because it is only when the active material of these plates is fully converted back to its original charged state that the voltage between the positive and negative terminals will be at maximum.

Comparing such a voltmeter reading with the hydrometer reading will also indicate whether the electrolyte is overrich or weak. For example, if the electrolyte shows a S. G. of 1.280 or 1.300 and a voltmeter only shows a reading of 1.8 volts per cell, this indicates that the electrolyte is too rich in acid and should be diluted with distilled water.

On the other hand if the voltmeter indicates a cell voltage of 2.2 and the hydrometer reading shows the gravity of the electrolyte to be only 1.230, this indicates that the electrolyte is too weak and should be slightly strengthened by adding more acid.

17. ON-THE-LINE VOLTAGE TEST

Voltmeter readings obtained when testing a battery will vary somewhat according to whether the battery is charging, is open-circuited and disconnected from the charging line, or is discharging under load.

The **on-the-line** voltage test is made while the battery is connected **in the charging line and charging.** At the end of the charge or when the cell is about fully charged the maximum cell voltage on this test will be about 2.5 volts. This voltage indicates a complete chemical change of the material in the plates. Old batteries often do not rise above 2.3 volts per cell on this test due to the negative plates retaining some of their lead sulphate.

Once the voltage of the cell reaches 2.5 volts there can be no further rise of gravity since the plates are free from lead sulphate. If the gravity is below or above the full charge specific gravity of the cell it should be corrected by adding acid or water accordingly.

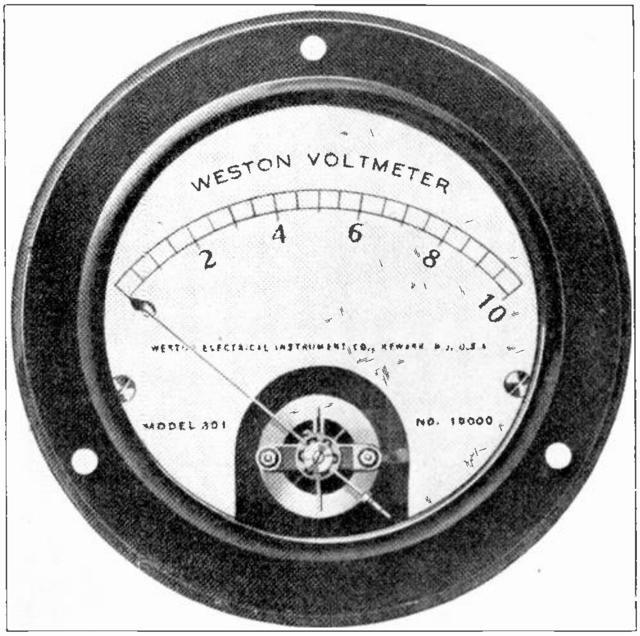

Fig. 17. Popular type of low reading voltmeter which can be mounted on a bench, panel, or portable test panel, and used for testing the voltage of storage cells or batteries. (Photo courtesy of Weston Electrical Instrument Co.)

It is not advisable to attempt to correct the density or gravity of the electrolyte before bringing the voltage up to maximum by charging.

18. OPEN CIRCUIT VOLTAGE TEST

As soon as a battery is removed from the charging line the cell voltage drops rapidly until it reaches 2.1 volts in from 2 to 3 minutes. This is caused by a thin layer of lead sulphate forming on the surface of the negative plates and between the grid and lead peroxide of the positive plate, due to a slight chemical or discharge action which occurs within the cell as soon as the charging circuit is broken.

Once this thin layer of lead sulphate is formed the rapid voltage drop ceases due to the resistance of the lead sulphate film. This discharge or local action doesn't cease entirely, however, and a lead plate cell will not stay charged indefinitely but will gradually become discharged even though not connected to any circuit or load. An idle lead plate battery will become discharged in about 100 days of idleness if not charged during the idle period.

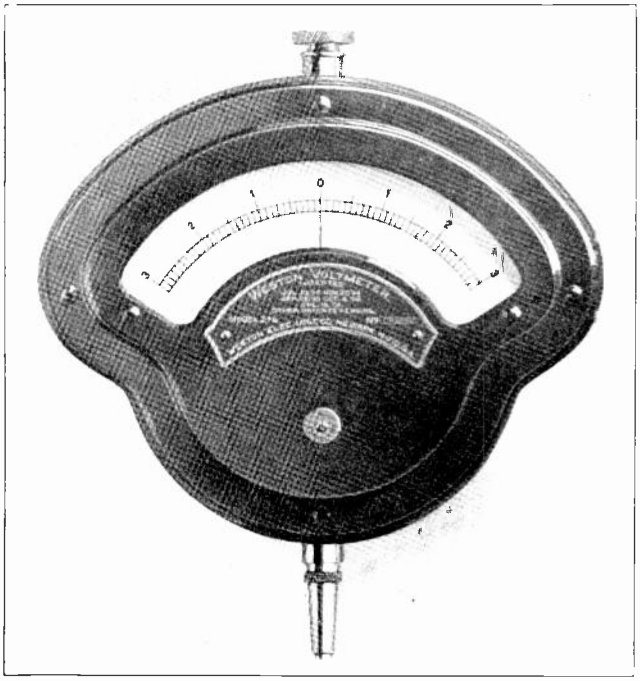

Fig. 18. Convenient type of portable voltmeter for testing the voltage of single cells. (Courtesy of Weston Electrical Instrument Co.)

During discharge of the battery, lead sulphate is formed on both groups of plates and causes the open circuit voltage to drop. Theoretically a cell can be discharged to zero voltage, but for all practical purposes the discharge should be stopped when the cell voltage drops to 1.7 volts on the open circuit test or voltmeter test made with the battery discharging at a very low rate.

If the discharge is carried beyond this point, so much of the active material will be converted into lead sulphate that the plates will be almost useless. The plates are then said to be **sulphated.** Plates which have been allowed to get into this condition require a long slow charge to free them of all the lead sulphate.

Fig. 17 shows a D. C. voltmeter of the type which can be conveniently used for testing storage batteries. You will note that this meter has a low reading scale so that quite accurate tests can be made on one cell or on several cells of a complete three-cell battery. This meter can be equipped with flexible test leads and points and either mounted on a wall or bench, or carried to a car to make tests on the battery before removing it. A portable meter in a wood case is also very convenient for testing batteries while in the car.

Fig. 18 shows another type of battery voltmeter particularly adapted for portable use. This instrument has a test point or prod directly attached to its lower side and forming one terminal of the meter. The other terminal on top of the case can be fitted with a flexible lead and test point. This meter has a scale which will allow the needle to read in either direction and only up to a maximum of 3 volts, thus giving very accurate readings on the low voltage of single cells.

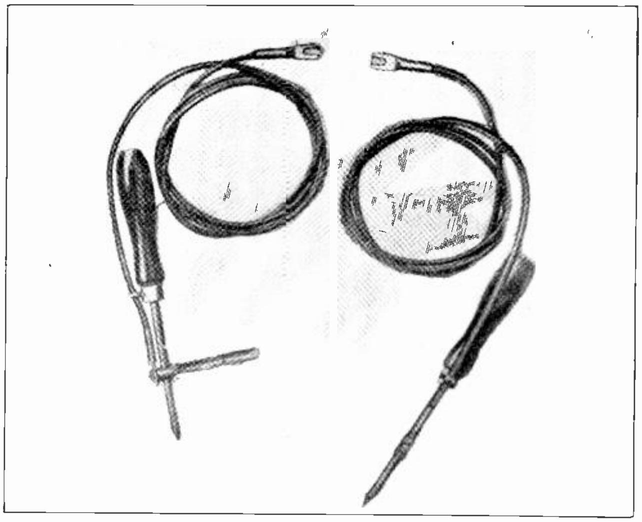

Fig. 19. This view shows a pair of test leads, one of which is equipped with a Cadmium stick for making Cadmium tests on storage batteries.

19. CADMIUM TEST

The Cadmium method of testing a battery is very reliable as it reveals the actual condition of the plates better than any other test does. With the Cadmium test we can determine two important facts regarding the condition of the battery.

1. Whether or not the capacity of both positive and negatives are equal.
2. Whether the battery is charged or discharged.

This test also serves as a check on both the voltage and specific gravity. The Cadmium test derives its name from the fact that a stick of cadmium metal is used in place of the usual negative voltmeter test point.

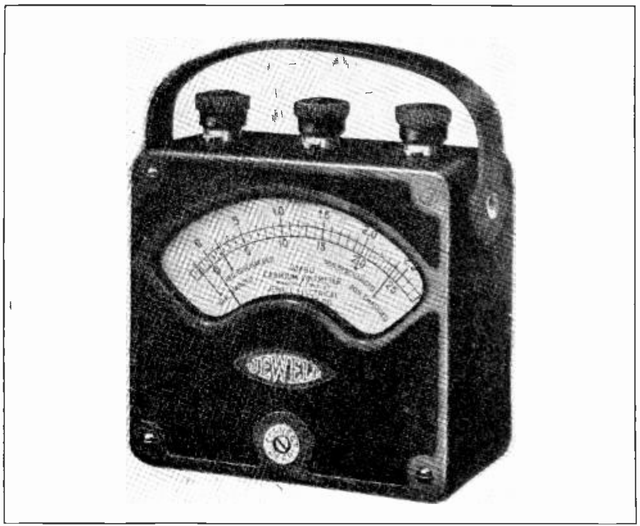

Fig. 20. Convenient portable voltmeter with special scale for making Cadmium test on lead plate battery. (Courtesy of Jewel Electrical Instrument Co.)

Fig. 19 shows a pair of voltmeter leads and test points for use in making cadmium tests. You will note the small round rod or stick of cadmium metal attached to the test point on the left.

This cadmium is a metallic element and not a mixture or alloy, and convenient small rods or cadmium sticks can be purchased from any battery material supply house.

When the cadmium stick is placed in the electrolyte of a cell with a voltmeter connected between the stick and one of the cell terminals, a definite voltage will be set up due to the difference in chemical action of the acid on the cadmium stick and the battery plates.

If the **voltmeter is connected between the cadmium stick and the negative plates or terminal** the voltage reading will vary according to the condition of the plates. If the plates are pure sponge lead or **fully charged the voltage will be about .1 volt,** the cadmium stick being positive and the plates negative in polarity. In this case the **reading will be to the left side of zero** on the voltmeter scale.

If the **voltmeter is connected between the cadmium stick and the positive plates or terminals** a different reading will be obtained. If the plates are pure lead peroxide or **fully charged the voltage reading will be 2.4 volts** and the cadmium stick will now be negative to the lead peroxide or positive plate.

When the cadmium stick is used in combination with lead sulphate or discharged plates a still different voltage will be obtained, all depending on the amount of lead sulphate on the plates tested.

Fig. 20 shows a voltmeter with a specially marked scale for cadmium tests, and Fig. 21 shows an enlarged drawing of the scale of a meter of this type.

Voltmeters for this work should be of high resistance for cadmium tests and should have a scale calibrated from 0 to 2.7 volts to the right of zero, and .3 volt to the left of zero. These same voltmeters can also be used to make all ordinary battery voltage tests, but they should never be connected across more than one cell because their voltage capacity is low.

Cadmium tests should only be made with the battery on charge at the regular charging rate. **The test lead to which the cadmium stick is attached should always be connected to the negative terminal of the voltmeter,** while the plain test lead to be used on the cell terminals is to be connected to the positive terminal of the meter.

With the battery on charge the cadmium stick is inserted through the vent hole of the cell cover until it makes good contact with the electrolyte. The cadmium stick must not touch the plates and for this reason many of these sticks are equipped with insulating tips or with a perforated rubber tube over their ends.

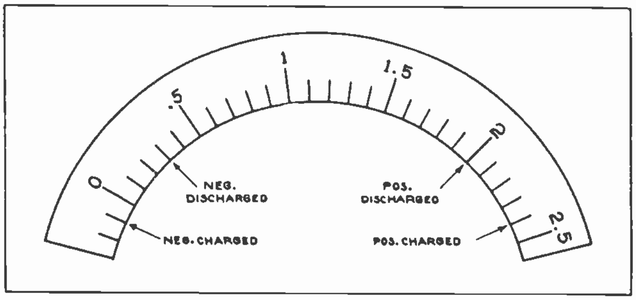

Fig. 21. Diagram showing the scale of a Cadmium test meter with the important test readings marked.

The cadmium should remain in the electrolyte for a minute or two before taking the readings so that a thin coating of cadmium sulphate will form on the stick. The other test point can then be shifted between the positive and negative cell terminals to make the various tests.

By attaching it to the negative terminal the condition of the negative plates can be determined, and when it is in contact with the positive terminal the condition of the positive plates can be determined by the voltmeter readings.

With the battery on charge the voltage reading between the cadmium stick and the positive terminal will be about 2.4 volts if the positive plates are pure lead peroxide or fully charged.

With the free test point on the negative terminal a reading of .1 volt to the left of zero will be obtained if the negative plates are pure sponge lead or fully charged.

If these two readings are added together their sum should equal the reading of a voltage test taken from positive to negative terminals. These voltages would indicate that both positive and negative plates are fully charged and in good condition.

If when making such a test the positive reading was 2.4 volts and the negative reading to the right of zero, the voltage of the cell would be obtained by subtracting the negative reading from the positive reading. Such a test would indicate that the negative plates are in bad condition since they are not charged while the positives are.

The cadmium test is the most reliable test that can be made and determines if both the positives and negatives are at the same state of charge, as they should be if both groups of plates are in good condition.

20. HY-RATE DISCHARGE TEST

The hy-rate discharge test is made on storage batteries by taking voltmeter readings across the individual cells while the battery is discharging at a heavy rate.

This test is particularly valuable in determining the condition of the various cells of a battery and is very commonly used in testing automobile batteries, as these batteries must maintain their voltage without excessive voltage drop while operating the starting motor which, as we have already learned, may draw several hundred amperes during starting of the engine.

For making this test some form of high rate discharge test set is generally used. These sets consist of a variable resistance, generally of the carbon pile type, an ammeter of sufficient capacity, and a voltmeter.

On some of these test sets three voltmeters are used, one being connected across each cell to eliminate the necessity of shifting the meter terminals from one cell to the next.

Fig. 22 shows three types of high rate discharge testers. The one above has a long tube filled with carbon disks and equipped with a knob and threaded rod at the right hand end to vary the pressure applied to these disks, and thereby vary their resistance and the rate of discharge of the battery connected to the set. The ammeter and voltmeter are also mounted on the base with the variable resistor.

On the lower left in Fig. 22 is shown another type of high rate discharge set with the meters and rheostat handle located on a vertical panel and equipped with both heavy-duty terminal clips and test prongs.

On the lower right in Fig. 22 is shown a convenient portable test device for making high rate discharge tests on individual cells. This device consists of a pair of heavy test prongs with a resistance element shunted across them, and the meter also connected across the prongs to read the voltage during the test.

This tester is conveniently portable and can be used right at the battery either on the charging bench or in the car, by merely pressing the sharpened test points down against the terminals or straps of the cell to be tested.

The discharge rate for making these tests is based on the number of plates per cell, the usual rate being 20 to 25 **amperes per positive plate,** figuring only the positive plates in one cell.

For example an 11-plate battery having eleven plates per cell would have 6 negatives and 5 positives in each cell. As the discharge rate is based on the number of positives the high rate discharge current for testing such cells would be 5 × 20, or 5 × 25, or 100 to 125 amperes.

While the battery is discharging at this rate the voltage of each cell is measured separately, and if the battery is in good condition and fully charged the voltage should not drop below 1.75 or 1.78 volts per cell during the test. This voltage drop is caused by the heavy current flowing through the internal resistance of the cell.

If the cell's internal resistance is normal the voltage drop will not be excessive but if the cell is in bad condition the voltage drop will be much higher than usual.

The internal resistance of a cell is due to the resistance of the several parts and materials in the internal circuit of the cell. When the cell is discharging through some load the discharge current also flows through the internal circuit and must pass through the plates, separators, and electrolyte; so the resistance of these materials determines the internal resistance of the cell.

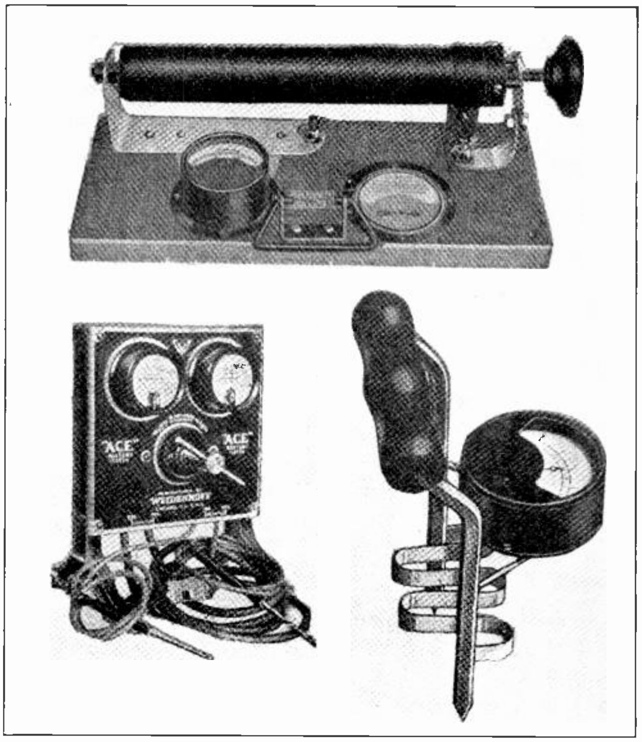

Fig. 22. Several styles of hy-rate discharge test sets. The one above is for either portable or bench use. The one at the lower left for bench use, and the one at lower right for portable use for testing individual cells.

Excessive voltage drop may be due to several causes such as spongy or worn out plates, clogged separators, or wrong specific gravity of the electrolyte.

Thin and worn separators may also be the cause of large voltage drop by allowing the plates to be short circuited during heavy discharge tests. A high rate discharge can be used to very good advantage to locate defective cells in batteries that are being brought in to a shop to be charged.

The exact readings obtained on this test are not as important as the difference in readings between the several cells. A cell that gives a reading of more than .1 volt less than the other cells is generally defective and should be opened and examined.

Sometimes a high rate discharge test will cause one cell to give a reverse reading which indicates that the cell is dead.

21. STORAGE BATTERY CAPACITY

The capacity of storage batteries or individual cells is rated in **ampere-hours.** This term refers to the product of the discharge current multiplied by the number of hours that the discharge can be maintained.

Capacity ratings for storage batteries of the automotive type are based on a discharge started from a fully charged condition, and continued until the battery reaches normal discharged condition with its voltage down to 1.7 volts per cell.

The discharge rate for capacity tests on automobile batteries is generally based on an eight-hour discharge period. For example, a battery rated at 80 ampere hours should be able to deliver 10 amperes for eight hours. The capacities of stationary batteries and those for use in electric vehicles is generally figured on a five-hour discharge rate.

One of the characteristics of storage batteries which it is very important to remember is that their capacity is affected by the rate of discharge, the capacity in ampere hours decreasing as the rate of discharge is increased.

For example, an 80 ampere-hour battery will not discharge at the rate of 80 amperes for one hour, but will deliver 4 amperes after considerably more than 20 hours. In other words, they will deliver more energy and show a higher efficiency at low rates of discharge than at high discharge rates.

The ampere-hour capacity of the storage battery depends upon several factors among which are: (a) plate area (b) porosity of active material (c) strength of electrolyte.

For all practical purposes the plate area is the most important factor, and principally controls the capacity of the battery. Therefore, all capacity formulas are based on plate area.

The chemical activity of a battery is always greatest at or near the surfaces of the plates where the active material and the acid are in contact with each other. This is particularly true during high rates of discharge when the acid is being used up very rapidly. So by increasing the plate surface exposed to the electrolyte we increase the amount of active material in contact with the acid, and thereby increase the capacity of the cell.

A simple formula for determining the approximate ampere-hour capacity of storage batteries according to the plate area is as follows:

$$\frac{W \times L \times 2 \times P.P.}{144} \times 50 = \text{ampere hour (A.H.) capacity.}$$

In which: W = width of the plates
L = length of plates
2 = number of sides on each plate
P. P. = number of positive plates in one cell
144 = square inches in 1 sq. ft.

The average positive plate for use in automobile batteries is approximately 4½ × 5½ inches. So if we apply this formula to an ordinary 11-plate, 3-cell automobile battery the problem would be as follows:

$$\frac{4.5 \times 5.5 \times 2 \times 5}{144} \times 50, \text{ or approximately 85.5 A.H.}$$

This battery would be rated in round figures as an 80 ampere-hour battery, allowing the slight excess capacity for reduction in efficiency with age.

The thickness of battery plates has very little effect on the ampere-hour capacity of the battery as under normal conditions a plate doesn't discharge actively clear through the plate, but discharges mainly on and near the surface. This is due to the fact that the pores in the active material soon become clogged and choked with lead sulphate.

When a battery is discharged down to the normal discharged condition it is very seldom that more than 25% of the active material is used, and that is largely at the surfaces of the plate.

While the plate thickness doesn't materially affect the ampere-hour capacity it does affect the discharge capacity or rate in amperes at which a cell or battery can be discharged.

Surprising as it may seem, thin plates always have a higher discharge capacity in amperes than thick plates. This is due to the fact that the electrolyte will diffuse through the thin plates much more rapidly and will quickly replace the acid used up by the active material during the discharge action of the plates.

Plates for automobile batteries are made in slightly different sizes in order to fit different styles of battery cases and to provide more or less capacity, according to the requirements of the car. This is well to remember when ordering plates for repairing various batteries and a good plan is to carefully measure or check the size of those removed when ordering the new ones to replace them.

Three common plate sizes are as follows:

Type	**Symbol**	**Dimensions**
Small	S	4½″ high × 5⅝″ wide
Medium	M	4¾″ to 5¼″ high × 5⅝″ wide
Large	B	6″ high × 5⅝″ wide

These plates can also be had in three different thicknesses as follows:

Type	Symbol	
Thin	T	3/32" thick
Regular	R	⅛" "
Thick	T.T.	5/32" "

22. CAPACITY TESTS

The purpose of a capacity test on a battery is to determine the amount of work that it is capable of doing before its voltage drops to 1.7 volts per cell, or the normal discharged condition.

While formulas give us a theoretical idea or approximate knowledge of what the rated capacity of a battery should be, the actual capacity can be much more accurately determined by a test.

This test is performed by charging the battery fully and then discharging it through a variable resistance and ammeter until the battery reaches the normal discharged condition.

In order to obtain accurate results from a capacity test of this kind the following two factors must be carefully watched and checked:

1. Discharge rate must be maintained constant from start to finish.
2. The time required for the battery to reach normal discharged condition must be noted.

In order to maintain a constant rate of discharge throughout the entire test period an ammeter and some form of variable resistance are necessary; the ammeter to check the amount of current flow and the rheostat to keep it adjusted to a constant value.

When the battery is first put on test its voltage is high but as the test progresses the voltage gradually drops and the discharge rate would tend to decrease. It is, therefore, necessary to cut out a little resistance about every 15 minutes in order to keep the discharge rate in amperes constant.

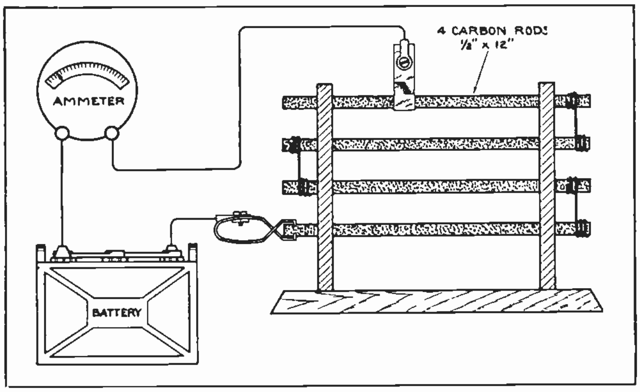

Fig. 23. Diagram showing construction and connections of a simple capacity test discharge resistance, which can be easily and cheaply made of carbon rods supported in an insulating frame of heat resisting material.

Fig. 23 shows a diagram of a simple capacity test arrangement, the equipment for which is very low in cost and simple to set up for any battery shop. The battery is connected in series with an ordinary ammeter of the proper capacity and several carbon rods such as ordinary arc carbons.

These round carbon rods can be mounted in strips of heat-resisting material of an insulating nature, such as asbestos, marble, or slate with their ends securely connected together in series as shown. A heavy test clip can then be used to vary the resistance in the circuit by sliding the clip along the rods or moving it from one rod to another.

Convenient carbon pile rheostats can also be obtained for this work but are, of course, a little more expensive than the simple shop tester shown in Fig. 23.

The discharge rate at which to start a capacity test on an automobile battery can be determined by dividing the assumed or approximate ampere-hour capacity of the battery by 8, because as previously stated these tests are generally made at the 8-hour discharge rate.

For example, if we wish to run a capacity test on an automotive battery which we assume from the number of plates used is an 80 ampere-hour battery, the discharge rate would be obtained by dividing 80 ampere-hours by 8 hours, or $80 \div 8 = 10$ amperes discharge rate.

If this battery when placed on capacity test can maintain a discharge rate of 10 amperes for 8 hours or more before the voltage drops to 1.7 volts per cell, and the gravity drops to 1.150, then the capacity is actually known to be 80 ampere-hours or more.

For example, if it required 8½ hours at the 10 ampere rate to bring the voltage and gravity down to the above mentioned figures then the capacity would be $8\frac{1}{2} \times 10$, or 85 ampere-hours.

The ampere-hour efficiency of a storage battery can be determined by dividing the discharge in ampere-hours by the charge in ampere-hours required to bring it back to the same state of charge as the test was started from. This efficiency of ordinary lead plate batteries often runs as high as 90% or over.

23. CYCLING STORAGE BATTERIES

Before putting into service a new lead plate battery or one that has been recharged and has had some of the old plates replaced with new ones the battery should be cycled, or charged and discharged several times.

This process more completely forms the new plates and greatly improves their condition and efficiency by more completely converting the paste into active material.

New batteries are generally cycled two or three times at the factory before being shipped out and this considerably increases their capacity and serviceability.

The original forming process described in an earlier article doesn't always change all of the paste into active material, and unless a new battery or one in which new repair plates have been installed is cycled, it will not deliver its rated capacity and may give trouble when first put in service.

A battery that has been neglected and allowed to become sulphated by standing for long periods in a discharged state will often fail to come up to full gravity and voltage when charged, due to the fact that one ordinary charging cannot convert all of the lead sulphate back into active material. Such a battery if given only the ordinary charge will not deliver its full rated capacity in ampere-hours and its performance will be rather poor.

Cycling a sulphated battery will convert more of the lead sulphate back into active material, thereby increasing the capacity and improving the performance of the battery. The rate of charge or discharge for cycling a battery should be at about the ordinary 8-hour rate, or a little slower generally, so that the battery can be discharged during the day and put back on the charging line throughout the evening.

As a rule the rate of discharge for cycling is between 2 and 3 amperes per positive plate in each cell. For example an 11-plate battery having 5 positive plates per cell would be discharged at about 10 to 15 amperes.

The same rheostat and ammeter used for making capacity tests can also be used along with a battery charger for cycling. However, as it is not necessary to keep the discharge rate constantly at the same value when cycling, a very simple and low cost discharge resistance can be made up from several automobile lamps connected in parallel and an ordinary automobile dash ammeter in series with them, as shown in Fig. 24.

If desired several small switches can be arranged to quickly connect more or less lamps in parallel, to vary the discharge rate for cycling different sized batteries.

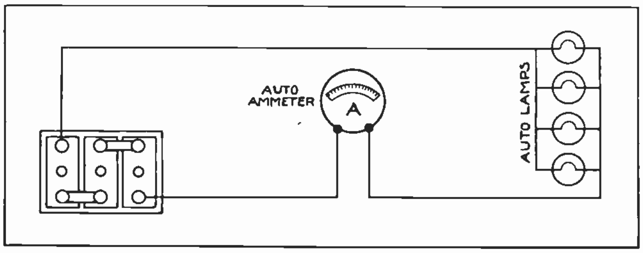

Fig. 24. This sketch shows the connections for using an ammeter and a group of automobile lamps for discharging a storage battery during a cycling process.

24. BATTERY CHARGING

As previously stated whenever the voltage of a lead plate storage battery drops down to 1.7 volts per cell the battery must be recharged. For charging storage batteries direct current is required because, in order to convert the lead sulphate back into active material on the plates and drive the acid from the plates back into the electrolyte, we must pass current constantly in one direction opposite to that of the discharge current.

This means that when connecting a storage battery for charging, the positive battery terminal must be connected to the positive side of the charging line or direct current source, so that the charging current will be forced into the battery at the positive terminal and out at the negative.

If there is any doubt about the polarity of the charging line wires, a simple test can be made by immersing the wire ends in a small glass of water to which has been added a small amount of acid. When the wire ends are held about an inch apart bubbles will rise from each, and the wire at which the most bubbles are formed is the negative. Some resistance, such as a 100-watt lamp or similar devices which will limit the current to about 1 ampere should be connected in series with the line when making this test.

The polarity can also be determined by a compass test with current flowing in the line, as explained in an earlier section.

Where only alternating current is supplied it can be rectified or changed to direct current for battery charging purposes, by means of bulb type rectifiers or motor-generators. If 110-volt D. C. is available all that is required is suitable resistance connected in series with the battery to reduce the voltage of the line and regulate the charging current.

There are two general methods in use for charging batteries, one known as the **constant current** method and the other as the **constant potential** method.

The constant current method is sometimes known as series charging, because all of the batteries are connected in series and are all charged at the same current rate regardless of their size or condition. With this system about the same charging rate in amperes is maintained from start to finish of the charging period.

Constant potential charging systems generally use a motor-generator set for changing A. C. to D. C., and all of the batteries are connected in parallel directly across the low voltage D. C. generator bus bars. This system is sometimes called **parallel charging**, as the batteries are all connected in parallel and each battery forms an individual or separate circuit between the positive and negative busses.

The motor-generator consists of either an A. C. or D. C. motor, according to the available current supply, driving a low-voltage D. C. generator which connects to the charging busses, and supplies a constant potential of about 7.5 volts for charging 6-volt batteries or 15 volts for charging 12-volt batteries.

With the batteries connected across the bus bars in parallel and a constant voltage maintained by the generator, the current through each battery will be governed by the voltage and condition of that battery.

If a completely discharged battery is connected across the bus bars the charging current through that battery will be quite high at the start, since the voltage of the battery is very low and offers very little opposition in addition to the internal resistance of the battery, to the current flow from the generator.

As the battery becomes charged its voltage gradually increases and opposes the voltage of the generator, thereby causing the charging rate to decrease or taper off.

Constant potential charging is also often referred to as 8-hour charging, because the rather high rate of charge used with these systems generally charges the average battery in about 8 hours.

25. CHARGING RATES

Charging rates depend largely on the size of the battery and the type of equipment used. In commercial charging it is not always practical to regulate the current to suit each individual battery and in cases of this kind a rate is used that best suits the average battery.

Where the charging current can be regulated a good rule to determine the charging rate for any certain battery is to start charging at ⅛ of its rated capacity in ampere hours, and when it is a little over one-half charged reduce this rate to one-half the starting rate.

For example, if the capacity of a battery is 80 ampere-hours, the charging rate at the start would be ⅛ of 80, or 10 amperes and the finishing rate about 5 amperes. The reason for reducing the charging rate toward the finish of the charge is to prevent overheating of the plates, as the amount of lead sulphate and acid in the plates and being worked upon by the charging current is gradually being reduced, and the heavy charging current would develop too much heat.

In constant current or series charging it is not possible to regulate the current to suit individual batteries, since they are all connected in series and the same amount of current flows through each.

A commercial charging line may have connected to it batteries of different capacities, ranging from 80 to 120 ampere hours. In addition to having different ampere-hour capacities these batteries will probably vary a great deal as to their state of charge, so it is necessary to select a rate suitable for the group.

26. ELECTRON BULB CHARGERS

A very popular type of battery charger used for rectifying or changing A. C. to D. C. and for charging batteries on constant current systems is the **electron bulb rectifier,** also commonly known as the **Tungar bulb charger.**

Due to the low current capacity of ordinary electron bulbs these chargers are used only with constant current or series charging systems. Bulb type chargers are made in two types known as **half wave** and **full wave** chargers.

A half wave charger is equipped with one bulb and has a maximum current output of 6 amperes of pulsating D. C. from one-half of the A. C. wave, or every other alternation only.

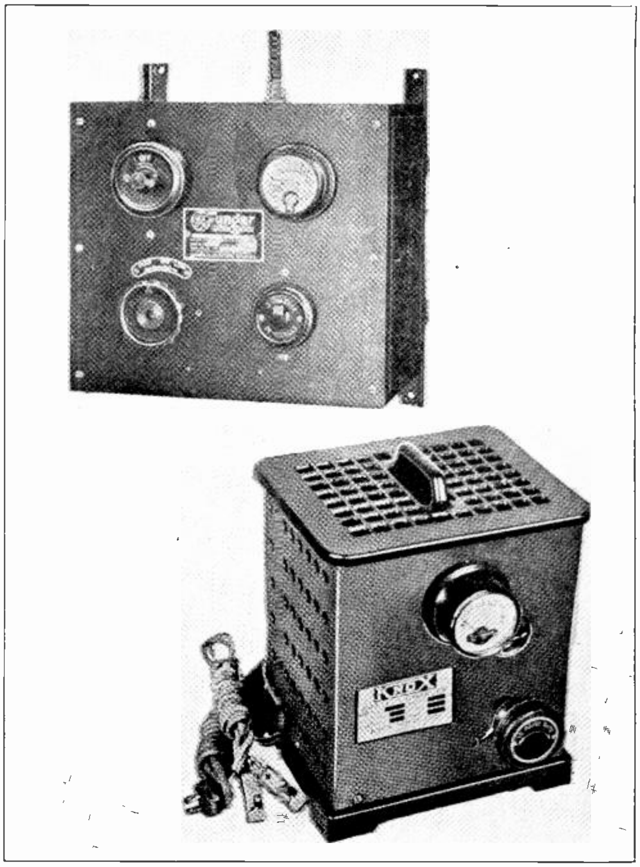

Fig. 25. Above are shown two common makes of bulb type rectifiers or battery chargers. The one above is a full-wave type, while the one below is a half-wave type.

Although the current output is low the voltage on the D. C. side of these chargers can be raised high enough to charge from 10 to 15 six-volt batteries in series. The voltage is regulated by means of a tap changing control which increases or decreases the number of turns in the winding of an auto transformer.

Full wave Tungar chargers use two rectifier bulbs and rectify both sides of the A. C. wave. The current output of these units is double that of the single wave chargers or about 12 amperes maximum. The voltage is controlled in the same manner as with single wave type. These chargers can, of course, be made to deliver more than the above mentioned amounts of current for short periods, but this will shorten the life of the rectifier bulbs much below their rated life which is between 800 to 1000 hours of operation.

For this reason their rated current capacity should not be exceeded. Vibration of the charger will also tend to reduce the life of the bulbs so these units should be mounted where they are free from excessive mechanical vibration. The efficiency of a well designed Tungar rectifier on full load is about 75%.

Fig. 25 shows two types of electron bulb chargers, the one at the upper left being the larger size full wave type for wall mounting, and the one below is a smaller charger of the single wave type for shelf mounting or portable use. Note the ammeters for indicating the charging rate and the knob controls for adjusting the transformer taps to vary the charging rate.

A complete description of the operating principles and circuits of Tungar rectifiers was given in Section Six on Alternating Current, and it would be very well for you to review this material at this point.

27. OPERATION OF BULB TYPE CHARGERS

While these rectifiers are very simple in design and easy to operate, there are a few rules that must be observed to secure best results with them. Half wave rectifiers may be equipped with one or two control dials, but full wave rectifiers are generally equipped with four controls, two for each bulb.

Where two controls are used for each bulb one is used to raise or lower the voltage in large steps while the other is used to regulate the voltage in smaller steps. The regulation of the voltage, of course, regulates the charging current sent through the battery or batteries.

The following simple rule should be followed when starting Tungar chargers.

First be sure all controls are turned back to zero, then turn on the starting switch and observe the bulb to see if it lights or burns. Now with the batteries properly connected turn the lower or close-regulating dial clockwise until the proper current value is shown on the ammeter. If the ammeter fails to show a reading turn this dial back to zero and try the upper or coarse-regulating dial. Bring the charging rate as close as possible to the proper value with this coarse dial, and then use the lower dial for final adjustment.

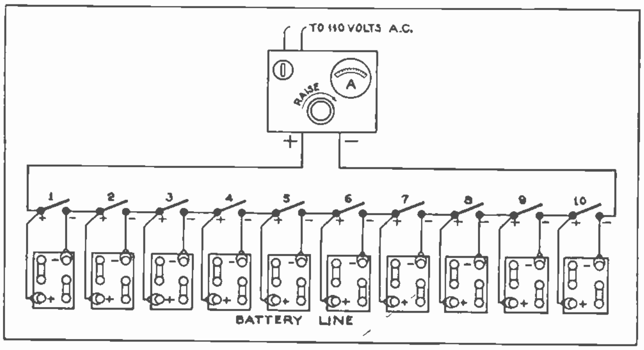

Fig. 28. Diagram showing the connections for charging up to ten batteries in series by means of a bulb type rectifier or the constant current system.

As more batteries are added to the line the charging rate drops so it will be necessary to readjust the controls to maintain the same current value. If a battery is accidentally connected backwards on a constant current charging circuit the charging rate will increase instead of decrease.

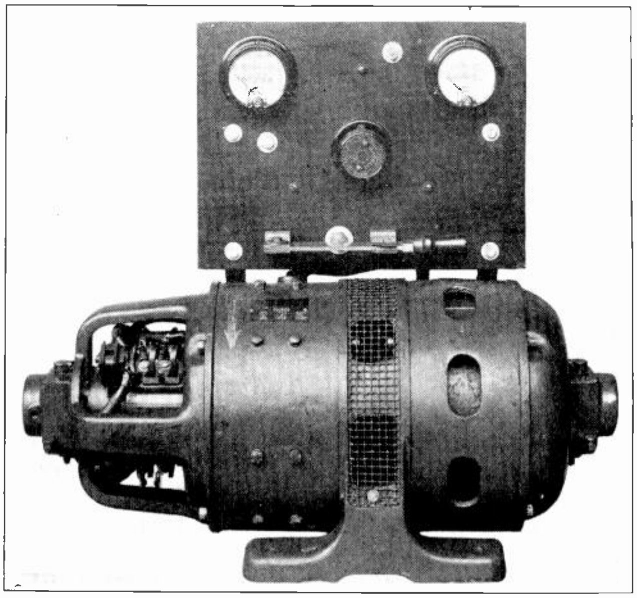

Fig. 27. This photo shows a neat, compact type of motor generator with its control and panel, for use in charging batteries by the constant potential method. (Courtesy of Roth Bros. Manufacturing Co.)

When part of the batteries are removed from the line the charging rate will automatically increase and if the controls are not readjusted the fuses will be blown. If the fuses are not of the proper size the bulb may be burned out instead. Ten-ampere fuses will generally give the proper protection.

If the Tungar charger fails to operate you can look for the following common troubles:

1. Examine supply line fuses.
2. Bulb filament may be open or burned out. Test bulb for open circuit or try a new bulb.
3. Make sure that the bulb is screwed tight in its socket.
4. If points of contact on bulb or in socket are dirty, clean them with sandpaper.
5. If the bulb glows but the ammeter fails to register examine the battery connections. Most troubles or interruptions with chargers of this type are caused by poor connections at the batteries.
6. Some chargers are provided with one fuse in series with the battery and if this fuse is blown no charging current will flow even though the bulb is glowing.
7. The rectifier bulb may fail to operate due to a slow leak in the glass having destroyed its vacuum, or due to a badly sagged filament.
8. Control contacts may be loose or dirty and not making proper connection in the circuit.

28. CONSTANT POTENTIAL CHARGERS

As already explained a constant potential charger consists of a motor-generator set, the motor being either D. C. or A. C. and designed for 110 or 220 volts, according to the available supply, and the generator producing direct current at 7½ volts for charging 6-volt batteries, or 15 volts for charging 12-volt batteries.

Fig. 27 shows a compact motor-generator charger of this type; the motor and generator units both being built into one frame. This machine is equipped with a panel on which are mounted the voltmeter and ammeter, voltage-regulating rheostat by which the charging rate is controlled, and a knife switch for closing the circuit to the bus bars and batteries.

Fig. 28 shows a neat charging bench equipped with a constant potential charger and the bus bars and batteries can be clearly seen in this view.

You will note that the batteries are all connected to the bus bars in parallel by means of flexible leads and battery clips, and the small knife switches are provided for disconnecting individual batteries.

Constant potential charging differs considerably from constant current or series charging in that with constant potential charging each battery regulates its own charging rate to quite an extent by its voltage and condition.

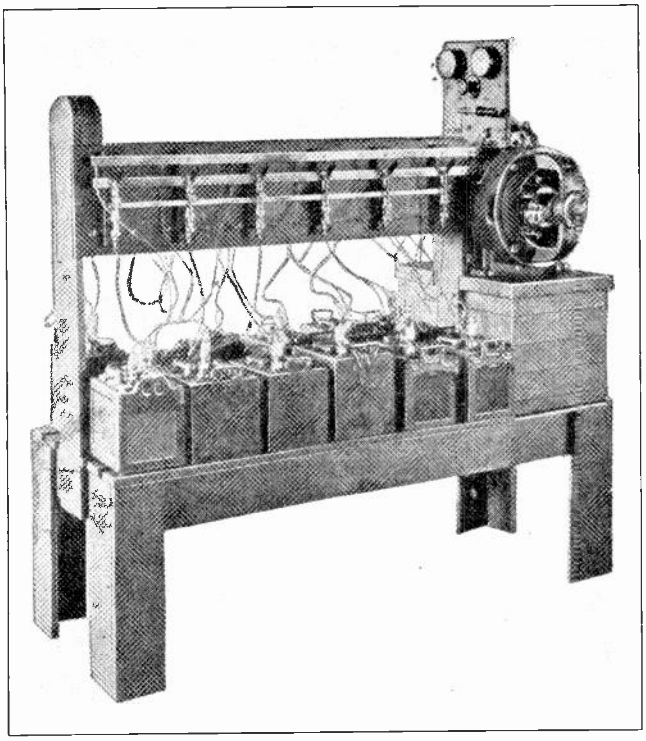

Fig. 28. Neat type of charging bench equipped with constant potential motor generator charger and convenient busses and switching arrangement for connecting and disconnecting the various batteries.

When a battery is first connected across the bus bars it charges at a very high rate due to its voltage being low, but this charging rate gradually decreases or tapers off as the voltage comes up to full charge.

When a completely discharged battery is placed on a constant potential system the charging current at the start may be as great as 20 amperes but will rapidly taper off as the battery voltage increases, dropping down to as low as 2 or 3 amperes when the battery becomes fully charged. Because of this action this form of charging is sometimes called a tapering charge. It is also very often referred to as "eight-hour charging service."

From this we can see that it is possible to have a number of batteries connected in parallel to one of these chargers and each of the batteries charging at a different rate, according to their state of charge and condition.

The charging rate is limited only by excessive heating, and when any battery overheats the charging rate should be reduced by connecting a resistance in series with one of the leads to that particular battery. Convenient small resistance units equipped with a clip at the lower end for attaching direct to the battery terminal are obtainable for this use.

The temperature of the batteries should never be allowed to exceed 110° F. during charging and temperature tests should always be made on a cell in the center of the battery, as these cells tend to heat more than the outer ones because of poor ventilation, due to the fact that they are between the outer cells.

Where both 6 and 12-volt batteries are to be charged two 7.5-volt generators can be connected together in series and their terminals connected to three bus bars, as shown in Fig. 29.

This makes it possible to obtain two different voltages from the bus bars, 7½ volts between the center bus and either of the outside ones and 15 volts across the two outside busses. Six-volt or twelve-volt batteries can be connected as shown in the diagram and both types charged at the same time.

29. OPERATION OF CONSTANT POTENTIAL CHARGERS

When operating constant potential battery chargers the following simple rules would be well to keep in mind:

1. Batteries must be connected in parallel across the bus bars, with the positive terminal of each battery connected to the positive bus and negative terminals to negative bus. When the generator is idle the main switch on the control panel must be opened before connecting batteries.

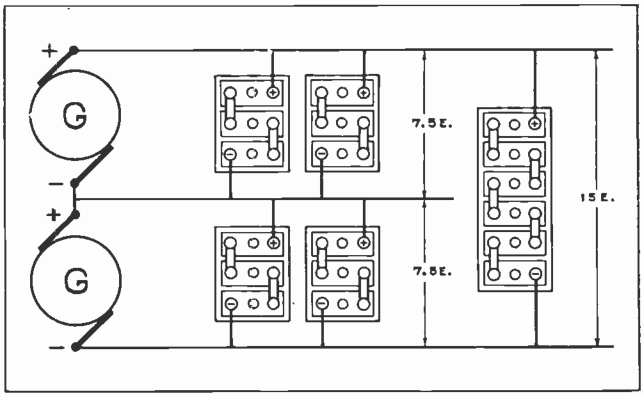

Fig. 29. This sketch shows the method of connecting two low voltage D. C. generators for charging both 6E and 12E batteries at the same time.

2. When starting the machine the motor of the M-G set is first started and allowed to come up to speed. The voltage is then regulated by means of the generator rheostat and is set at 7.5 volts for charging 6-volt batteries. This voltage adjustment is very important and must not be neglected.

3. When the voltmeter registers 7.5 volts the main switch on the control panel can be closed, completing the charging circuit and starting the batteries to charge.

4. If it is necessary to stop the set for any reason, first open the main switch on the control panel in order to prevent the batteries from feeding current back through the idle armature of the generator. It is also advisable to disconnect the battery leads or open the individual battery switches when provided, and thus disconnect the batteries from the bus bars, or otherwise current will circulate between the batteries. This is caused by the ones which are of higher voltage or nearer to full charge discharging through the ones that are of lower voltage or have not been on charge as long.

The ammeter on the control panel will indicate the total charging current passing through all batteries. Each battery will take current according to its state of charge and condition, and if it is desired to know the charging current of any individual battery this can be obtained by connecting a small ammeter in series with one of the leads to that battery.

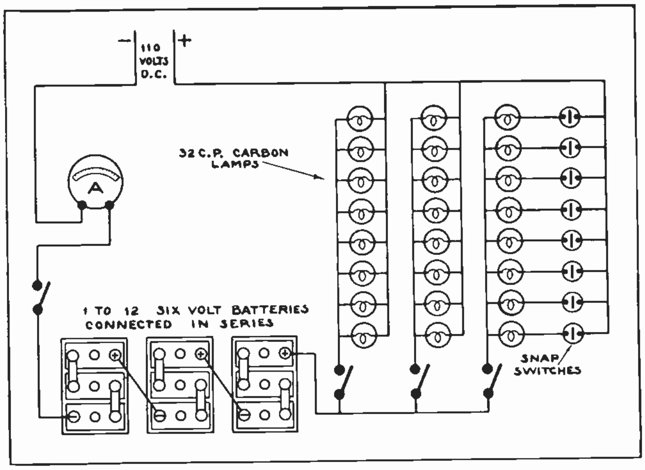

Fig. 30. Diagram showing the connections for using a lamp bank to charge from one to twelve six-volt batteries directly from a 110-Volt D. C. line.

Caution: Be very careful never to accidentally connect a charging lead across the bus bars or from positive to negative bus, as this short-circuits the D. C. generator and you may receive a severe burn due to the heavy rush of current.

30. CHARGING DIRECT FROM D. C. LINES WITH RHEOSTATS

We have already mentioned that when a supply of 110-volt direct current is available, batteries can be charged directly from such a line by connecting a proper resistance in series with them. For charging in this manner the batteries are all connected in series, as with the constant current or Tungar charger systems.

Very economical charging resistances in the form of lamp banks, consisting of a number of lamps in parallel, can be made for this use or a simple water rheostat can be used. Adjustable factory-made rheostats can also be purchased for this use.

Fig. 30 shows a diagram of the connections for charging several automotive batteries with a lamp bank.

Any ordinary 110-volt incandescent lamps can be used for such lamp banks but it is quite common practice to use 32-candle-power, carbon filament lamps as they are very rugged and low in cost. A 32-C.P. lamp offers 110 ohms resistance and will allow 1 ampere to pass through it when connected directly across a 110-volt line.

However, when these lamps are used in a lamp bank and a string of batteries connected in series with them, the current through each lamp will naturally be a little less than 1 ampere due to the counter voltage and internal resistance of the batteries.

It is, therefore, necessary to use a number of lamps in parallel in order to obtain the desirable charging rate. The charging rate can be easily regulated by turning on or off one or more of the lamps by means of switches placed in series with them. With a lamp bank adjusted for a charging rate of 6 amperes the average automotive battery will be fully charged in 24 hours.

The diagram in Fig. 30 shows a sufficient number of lamps in the charging bank to enable a line of 10 or 12 batteries to be charged at a fairly good rate. It is, of course, not necessary to use all of these lamps when only charging a few batteries. The knife switches shown can be used to turn on or off complete groups of lamps, and the small snap switches shown in series with each of the lamps in the right-hand group can be used to turn on or off individual lamps of this group for final regulation of the charging rate.

The upper view in Fig. 31 shows a method of connecting a rheostat in series with a group of batteries for charging them directly from a 110-volt line, and the lower sketch in this figure illustrates the use of a water rheostat for the same purpose.

A simple water rheostat is a very convenient device for occasional charging of batteries, and can be made from a large earthen jar filled with water to which a small amount of sulphuric acid or salt has been added, to increase its conductivity and reduce its resistance.

The electrodes can be made of a couple of old battery plates or most any flat pieces of metal, and the charging rate can be varied by raising or lowering one or both of the electrodes in the solution.

Care must be taken with a water rheostat to see

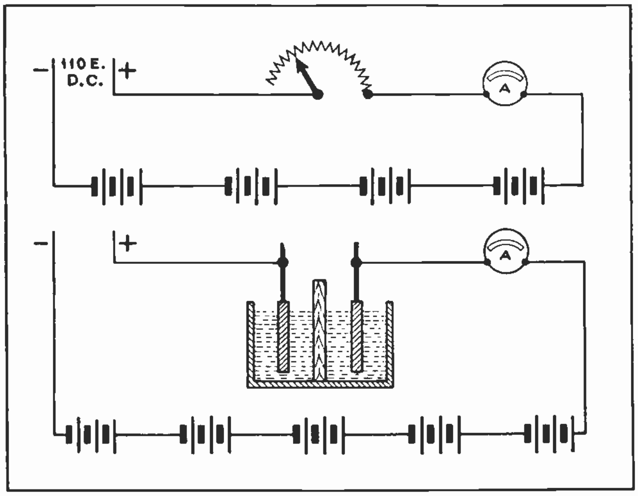

Fig. 31. The above sketch shows method of using an ordinary factory made rheostat and ammeter for charging batteries from 110-volt D. C. line. The sketch below shows a home made water rheostat used in place of the commercial rheostat.

that the liquid doesn't over-heat or boil away. It is a good plan to place a strip of wood or some other porous insulating material between the electrodes of a water rheostat to prevent them from accidentally becoming shorted together. Be careful to see that the insulator does not form a complete barrier and tend to prevent current flow from one electrode to the other.

The advantage of a water rheostat is that it can be quickly and easily made up from ordinary parts around a battery shop and used for emergency charging from 110-volt D. C. lines. In general, however, the lamp bank or commercial form of rheostat will be found more dependable and will require less attention.

31. BATTERY TROUBLES AND REMEDIES

Because of the very severe conditions under which the average automobile battery operates they require frequent inspection and occasional repairs. Automotive batteries are subjected to severe vibration, very heavy discharge rates, and very often excessive charging rates, and they are also quite generally subjected to neglect on the part of the car owner. These things will tend to shorten the life of a battery and to cause it to give unsatisfactory service, unless some battery service man who knows how is frequently inspecting the battery and making the necessary repairs from time to time.

If given proper care, which simply means keeping it well charged, filled, and cleaned, a good grade of battery should ordinarily last from 2 to 3 years. On the other hand, a very good battery can be ruined or put in bad condition within a few months by abuse and improper care.

One of the most common abuses to which the average automobile battery is subjected is low electrolyte level caused by neglecting to inspect and refill at proper intervals. Many car owners forget that the water in their battery electrolyte is constantly evaporating and thereby lowering the electrolyte level. This evaporation is particularly rapid during hot weather and the battery should be inspected and refilled with distilled water at least every 2 weeks in Summer and 4 weeks in Winter, or oftener in case of heavy use.

Another common abuse of automotive batteries is operating them in a semi-discharged condition, which causes the plates to sulphate and the battery to give poor service. This can be prevented by simply removing the battery from the car and having it fully charged in the shop, or by slightly increasing the charging rate of the car generator.

In many cases batteries are also damaged by maintaining an excessive charging rate which causes gassing and overheating. This can be avoided by simply adjusting the charging rate of the automobile generator. Some of the more common battery troubles with their symptoms and remedies are given in the following paragraphs.

When a **battery will not hold a charge** but runs down immediately after being fully charged this is generally due to broken down insulation caused by failure of the separators between the plates. Or, in some cases, it is caused by high sediment in the bottom of the jars due to the shedding of active material from old or abused plates.

In either case the cells will have to be opened and either new separators installed or the sediment removed.

Separator troubles or failure may be due to a number of causes such as wearing thin or completely through due to normal wear or buckled plates; carbonizing of the wood due to strong electrolyte, or overheating; cracks sometimes caused by low electrolyte exposing the upper portion of the separators to the air; poor quality of wood used in the separators. The only remedy for any of these faults is to replace the old separators with new ones.

When the **battery appears weak** and fails to operate the starter or lights properly the trouble may be either in the battery itself or in its connections. It may be that the battery is not fully charged due to too low a charging rate, or to excessive use of lights and starting motor. The trouble may be due to low electrolyte which allows only part of the plate surface to be active, or it may be due to worn out plates or broken plate connections. It may also be due to loose or corroded terminals or to the battery being too small in capacity for the load of drain placed upon it by the electrical equipment of the car.

Sulphation is quite a common cause of battery trouble. This condition occurs when the lead sulphate on the plates has had a chance to harden into a white crystal formation, which is a very poor conductor of electricity and tends to clog or seal the pores of the plates, reducing their porosity and activity.

Sulphated plates will not take a charge properly and even though the charging rate may be normal

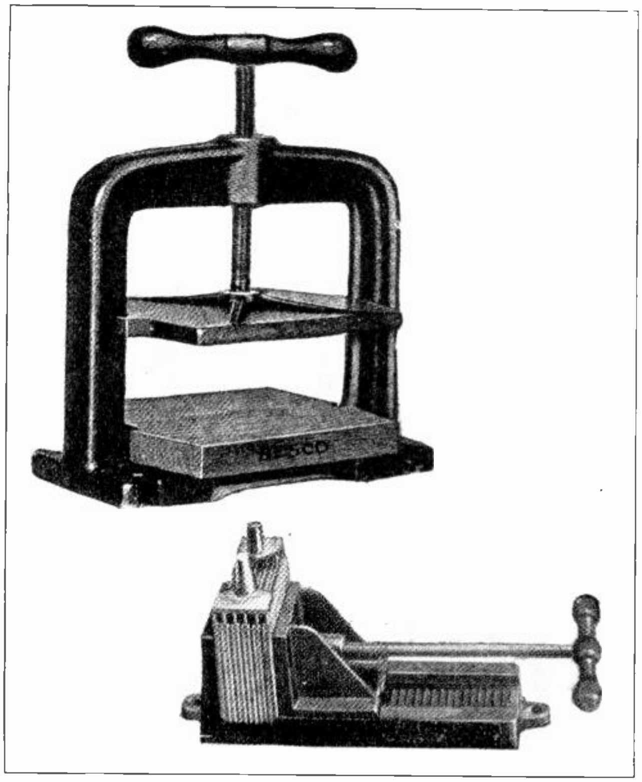

Fig. 32. Two types of plate presses used for straightening negative plates which have been warped or buckled out of shape, but are otherwise in fair condition.

the battery constantly appears weak and low in voltage. Sulphation may be caused by allowing the electrolyte to evaporate to a very low level. It may also be caused by the battery never having been fully charged or by overrich electrolyte.

Sulphation tends to reduce the ampere-hour capacity of the battery and in many cases causes the plates to warp or buckle. The only remedy for a sulphated battery is a prolonged charge at a low rate of between two to six amperes after which it should be cycled or discharged and recharged a couple of times as explained in a previous article.

32. BUCKLED PLATES

Buckled plates are quite often the cause of separator failure and defective battery operation. Warping or buckling of the plates may be due to overheating, over-discharging, or allowing the battery to stand a long time in a discharged condition.

When the plates warp or buckle in this manner their corners exert excessive pressure on the separators and, due to the vibration of the battery in the car, will soon wear completely through the separator and short circuit the cell.

If the negative plates are in good condition otherwise except for being warped they may be straightened by pressing them in a **plate press,** and put back into service. To straighten plates in this manner the positive and negative groups are separated and thin boards inserted between the plates of the group that is to be pressed.

This whole assembly is then placed in the plate press and pressure applied very gradually until plates are again straight and flat. Positive plates cannot be straightened successfully by pressing, as the active material cracks and drops from grids.

Fig. 32 shows two styles of plate presses which are commonly used in battery shops for this work.

Another trouble that is often caused by allowing batteries to become overheated is known as **granular plates.** When the temperature of batteries is allowed to become higher than 110° F. the plates gradually become soft, the positives loosening or shedding their active material and the negatives tending to swell up and become spongy or sandy appearing. The only remedy for granular plates is to replace them with new ones.

Lead plate batteries will freeze in cold weather if the electrolyte is allowed to become too low in specific gravity by operating the battery in a nearly discharged condition. Frozen plates can be readily detected when the plate groups are separated as the active material will fall off the positive plates in hard flakes, having been forced loose from the grid by the expansion of the electrolyte when it froze.

Frozen plates are always an indication that the battery was not fully charged, because it requires a temperature of 94° F. below zero to freeze electrolyte at 1.300 specific gravity.

The only remedy for frozen plates is, of course, to replace them with new ones.

Sometimes a battery will develop a cracked case or jars due to vibration, buckled plates, or freezing. The indication of a cracked case or jar is excessive loss of electrolyte in one cell, making it necessary to fill this cell more frequently than the others to keep the electrolyte at the proper level.

Where a rubber case is used electrolyte will also be noticed on the outside of the case if it is cracked. Where rubber jars are used in a wood box the bottom of the box will be wet with electrolyte and if the condition has existed for some time the wood may be badly rotted and softened by the action of the acid.

Fig. 33 shows how to test single battery jars or rubber battery cases for leaks. The method shown in the upper sketch is used for testing a rubber jar, by filling the jar with weak electrolyte and immersing it in electrolyte as shown. A pair of metal electrodes connected in series with a 10-watt lamp and to a 110-volt D.C. or A.C. line are then placed as shown, one in the electrolyte within the jar and the other in the electrolyte around the jar.

If the jar is cracked the lamp will light, but if the jar is good the lamp will remain dark. In making this test be sure to keep the upper edges of the jar slightly out of the electrolyte so that the whole jar is not immersed.

For testing rubber battery cases, as shown in the lower sketch in Fig. 33, each of the cell compartments is filled nearly to the top with weak electrolyte and tests made with the electrodes on each side of both partitions.

The lamp will indicate a leak in either partition by lighting when the electrodes are placed on opposite sides of the cracked rubber wall.

33. BATTERY CARE

A few general rules that can be followed by the battery repair man and also by the car owner to avoid many of the common battery troubles are as follows:

1. Keep the battery well charged and frequently test the voltage and gravity. Also keep the electrolyte one-fourth inch or more above the tops of the plates at all times.

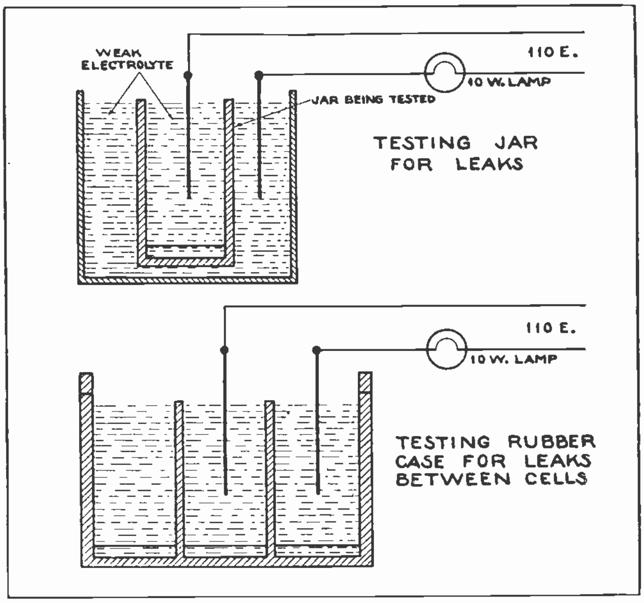

Fig. 33. The above two sketches illustrate the method of testing single cell jars or complete rubber battery cases for possible cracks or leaks.

2. Use only pure distilled water for refilling the battery and replacing evaporated water from the electrolyte.

3. In cold weather be particularly careful to keep the battery fully charged to prevent its freezing.

4. Inspect the battery every two or three weeks during the Winter and weekly in the Summer. Several times a week is not too often during long, fast trips in hot weather.

5. Do not allow the battery to overheat by excessive charging but instead reduce the charging rate either by adjusting the generator third brush or by burning the headlights while driving.

6. Do not overload the battery by using too many extra electrical accessories or light bulbs that are too large.

7. Do not use the starter excessively.

8. Keep the battery terminals tight and free from corrosion. Clean off any corrosion that may have formed by wiping terminals with a cloth soaked in ammonia or strong soda water, and prevent further corrosion by coating terminals with vaseline.

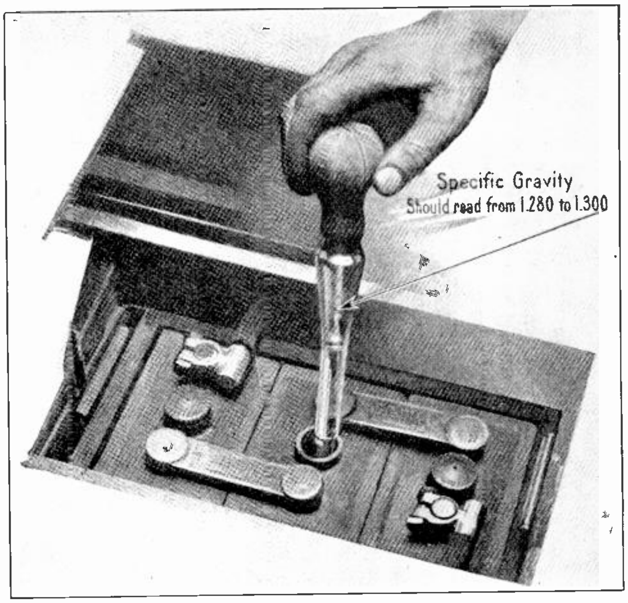

Fig. 33A. This view shows the use of a hydrometer for testing the gravity of a battery right on the car This test is very important and should never be neglected when inspecting a customer's battery.

9. See that the generator charges at the proper rate to keep the battery well charged but not high enough to overheat it.

10. If the gravity fails to come up to full charge reading when the car is in service, check the generator charging rate and increase it if necessary.

11. Keep the top of the battery dry and clean at all times.

12. Always remember to switch off the ignition even though the engine may have stopped due to stalling, and also remember to turn the light switch to the parking position when the car is idle at night, and thus prevent excessive drain on the battery.

34. STORAGE BATTERY REPAIRS AND SHOP METHODS

In working in an automotive battery service station or operating a shop of your own, there are a number of common repairs and service operations which are most frequently performed. Some of the most common of these jobs and the methods of performing them are explained in the following paragraphs.

The battery service man is frequently called upon to inspect batteries on the cars, to determine the level of the electrolyte, and refill the battery with distilled water if necessary. This is an extremely simple operation but one which should be carefully done in order to be sure that all three cells of the battery are properly filled.

As previously explained the level of the electrolyte should be brought up to between ¼ and ½ inch above the tops of the plates, but care should be taken not to fill the cells too full, so that the electrolyte will not be up to the tops of the filler openings where it will leak or splash out through the small openings in the filler or vent caps.

Water or acid spilled on the top of an automobile battery tend to collect dust and create a muddy condition, and also tend to cause the battery terminals and connections to corrode.

Fig. 34 shows a convenient form of battery filler outfit consisting of an inverted one gallon glass bottle mounted in a carrier frame and stand which has a cork to fit the neck of the bottle, and a flexible rubber tube for running the water into the cell openings.

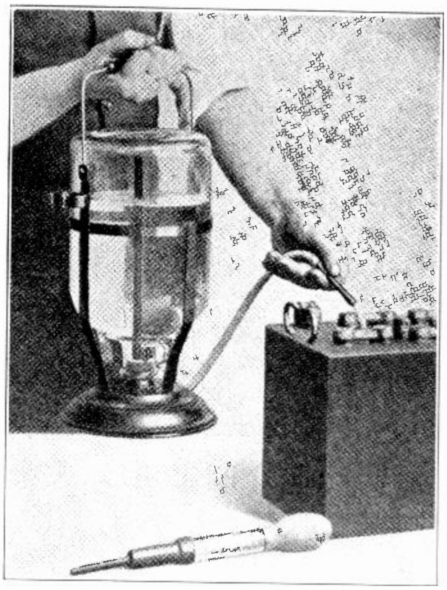

Fig. 34. Above is shown a very convenient type of battery filler used for adding distilled water to the cells of lead plate batteries for automotive or radio use.

These devices provide a small stream with which it is easy to fill the cells and yet easy to avoid spilling the water. They also permit the operator to see the level of the electrolyte inside the cell, which cannot be done if a funnel is used. When the cell is filled to the proper level the water can be immediately shut off by merely pinching the rubber tube. If a cell is too full some of the electrolyte can be removed by sucking it out with a hydrometer, or with a regular syringe made for this purpose and having a large rubber bulb and a slender rubber stem.

The operator in a battery shop should always encourage his customers and local automobile owners to come in regularly for this inspection and service on their battery, as the small amount of time required will be much more than repaid by the longer and more satisfactory service obtained from a battery that is kept properly filled.

A small charge can be made for this service if desired, or in many cases giving this service free will bring in a great deal of profitable battery business in the form of other repairs from customers whose good will and regular patronage has been obtained through this free service.

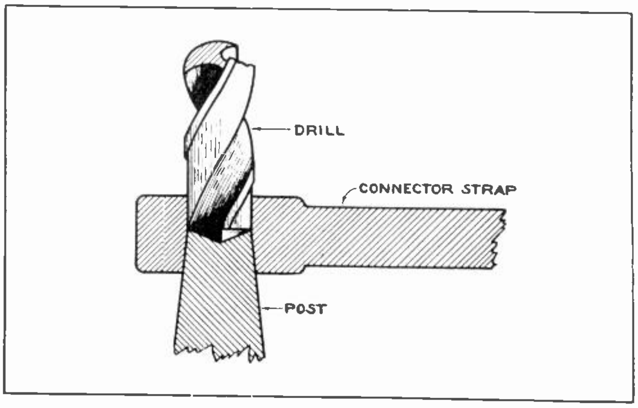

Fig. 35. Diagram showing the method of drilling out the tops of posts to remove connector straps when taking a battery apart.

Another test that is commonly made on the batteries while in the cars is the test of the battery voltage and of the specific gravity of the electrolyte. This test is also very easy to make with a portable voltmeter and a battery hydrometer.

In many cases the car owner's battery may be giving fairly good service in the operation of the lights and starter, and yet be getting very close to the discharged condition, where it will fail him just at some time when he most needs it.

This can be avoided by testing the voltage and gravity regularly and keeping the generator charging rate adjusted so that it will keep the battery well charged. In the Winter time these tests are particularly useful in avoiding frozen batteries, as frozen batteries are always due to having allowed the batteries to operate in a nearly discharged condition.

Leaky cells and cells with shorted plates or other defects can also be detected by these tests in time to correct the trouble before all the plates of the cell are ruined by sulphation, due to low electrolyte, or badly damaged by short circuiting.

35. OPENING AND DISASSEMBLING STORAGE BATTERIES

When a battery needs to be removed from the car and taken into the shop for repairs one of the first problems in the shop is to properly open the battery with the least loss of time, and without damaging any of its parts. There are three operations neces-

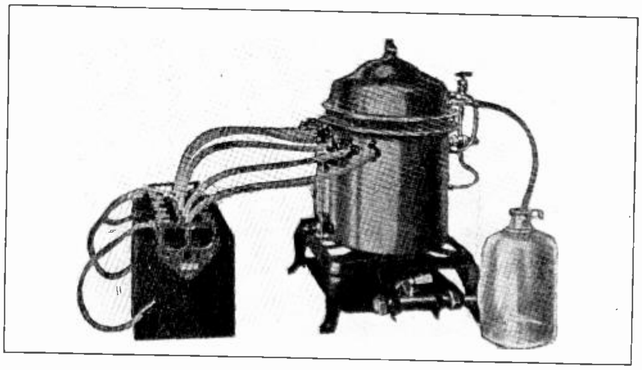

Fig. 35A. Common and convenient type of battery still and steamer, used both for steaming and softening compound when disassembling batteries, and for supplying distilled water for use in mixing electrolyte for refilling battery cells.

sary to open any automotive battery and these are as follows:—

1. Cell connectors or straps must be removed.

2. The sealing compound and cell covers must be softened and removed.

3. The elements or plate groups must be drawn from the cells.

The cell connectors or straps can be removed from the terminal posts by means of a large drill of about the same diameter as the top of the post. First mark the exact center of the posts and connectors, and then using a ½", ⅝", or ¾" diameter drill, depending on the size of the post, drill about half way through the welded or burned-on portion of the strap and post connection, as illustrated in Fig. 35.

The connector straps can then be easily removed by means of a heavy pair of gas pliers.

Another way in which these connector straps are often removed is by using a lead burning torch to melt or soften the top of the strap directly over the post connection, while keeping an upward pressure exerted on the strap by prying from underneath with a screw driver.

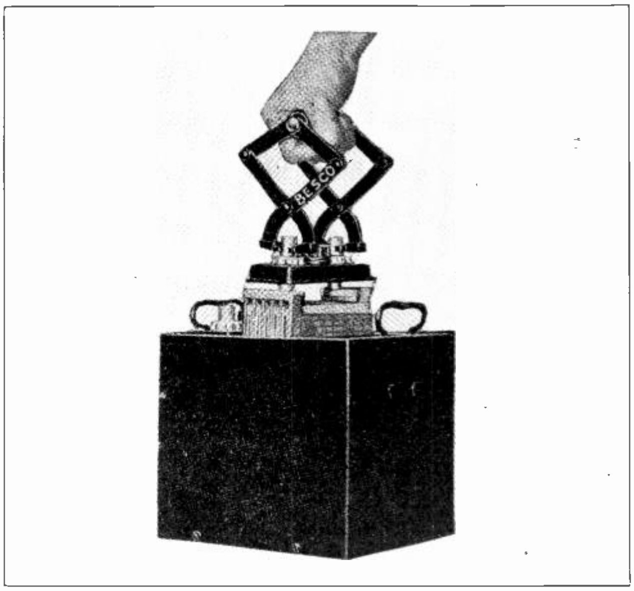

Fig. 36. This view shows a convenient type of cell puller used for lifting plate groups or elements from cell jars when taking down a battery for repairs.

As soon as the top of the strap has become melted or softened about half way through it will release from the post and pry upward.

The sealing compound and covers can be softened and loosened by heating or steaming. This is usually done by means of a regular battery steamer, such as shown in Fig. 35-A, and which supplies steam under low pressure through several rubber tubes which can be inserted into the cells through the vent openings.

This method requires from five to ten minutes to soften the compound so that the cell covers can be removed and the elements taken out. The device shown in Fig. 35-A is a combination steamer and still.

By boiling water in this container placed over the gas flame, pure distilled water can be obtained from the hose on the right, which is shown placed in the top of the glass jar, and the unit also supplies steam from the tubes on the left for opening batteries.

When not in use for opening a battery these steam tubes can be shut off by means of small cocks or valves, and the steam allowed to condense in the upper part of the still and drip from the right hand tube into the jar in the form of distilled water.

The compound can also be softened by lightly playing a soft torch flame over the top of the battery in case no steamer is available.

When opening a battery it is not necessary to remove all of the electrolyte from the cells, but it is advisable to drain it down to the top of the separators by means of a filler syringe or hydrometer, as the steam process will add some distilled water to the cell and might cause it to overflow if the electrolyte level was high.

After softening the compound the elements including the covers are removed by taking hold of the cell posts with two pairs of pliers or with a regular cell group puller, such as shown in Fig. 36, and pulling upward. The elements can then be left setting in a slanting position on top of the jars, to permit them to drain and allow the electrolyte which runs from them to drip back into the jars.

After draining all compound should be carefully cleaned off from the covers and jar tops by means of a heated putty knife or scraper, both of which are shown in Fig. 37.

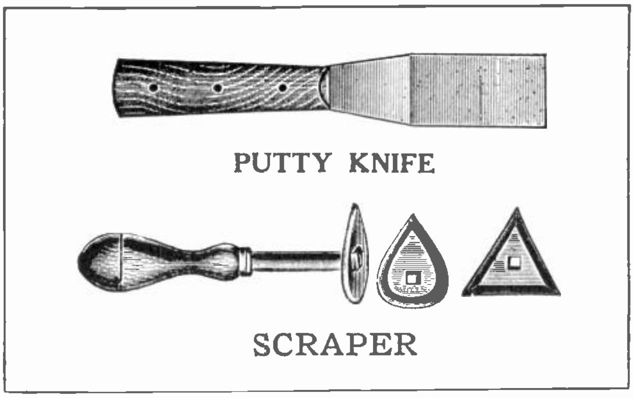

Fig. 37. A putty knife and scraping tool such as shown above are very convenient tools for removing or trimming sealing compound on storage batteries.

36. REPLACING DEFECTIVE PLATES AND SEPARATORS

After the elements are removed and the positive and negative plate groups separated, it is easy to tell by examining them and the separators what repairs are necessary.

If the separators are cracked, worn thin, or punctured they should be replaced with new ones, and if both sets of plates are in good condition they may not need to be renewed.

When either set of plates are badly worn or have lost considerable of their active material they should be replaced with new plates. Badly warped negative plates should either be straightened in a plate press or replaced with new ones. Granular plates or badly sulphated plates should also be replaced, unless perhaps in the case of sulphated plates the sulphation is not so bad but that it can be corrected by a prolonged charge and cycling.

The positive plates usually wear out somewhat faster than the negatives do and, in some cases where the positive plates are in very bad condition, and the negatives still comparatively good, a new set of positives may be used with the old negatives and considerable service obtained from a battery rebuilt in this manner.

However, a battery which has had all of the plates replaced will be likely to give much more dependable and considerably longer service. A good point to remember in this connection is that it seldom pays to put back any parts into a battery if their life or service would be questionable, because even if your work is well done on the part which you repaired and some other part fails very shortly after the battery is back in service the customer is likely to blame your work for the failure.

In many cases, where all the plates are in bad condition, it is just about as cheap for the customer and much more profitable for the battery man to sell a new battery. This is particularly true where labor costs and wages are rather high and where factory made batteries can be obtained at low cost.

In other cases, however, where labor costs are low it may pay to replace the plates and rebuild the battery, using the case or jars and covers over again.

Where a new battery is sold to the customer the best of the used plates can be saved and used in rebuilt batteries for loan service. A small allowance can be made to the customer on his purchase of a new battery if the parts from the old one are worth it.

Very often the only thing wrong with a battery or the cell will be the separators, in which case they should all be replaced with new ones, and the cost of this repair job is low enough to be very practical.

37. REASSEMBLING REPAIRED BATTERIES

After repairs have been made on a battery it can be reassembled in the following manner. First assemble the positive and negative groups with the separators between the plates. Then place the groups in the jars or cell compartments of the battery case, taking care to arrange them according to polarity, or so that positive and negative terminals are in the proper position for conveniently connecting the cells in series for the battery.

When replacing the covers if there is any difficulty in forcing them onto the cells the covers should be steamed or heated until slightly softened, after which they will go in place very readily.

After the elements and covers are all in place the cells must be sealed with hot compound, the sealing compound being heated in a small pot over a gas flame, or in an electrically heated dipper which can be obtained for this purpose.

Before pouring the compound make sure that the covers fit snugly all around so that no compound will be allowed to run into the cell and also make sure that all surfaces are dry, as compound will not stick to wet spots.

The cover channels can be dried out by passing a soft-flame torch quickly and lightly over them.

After the battery is sealed the freshly poured compound can be given a much neater and better finished appearance by passing the torch flame lightly back and forth over it.

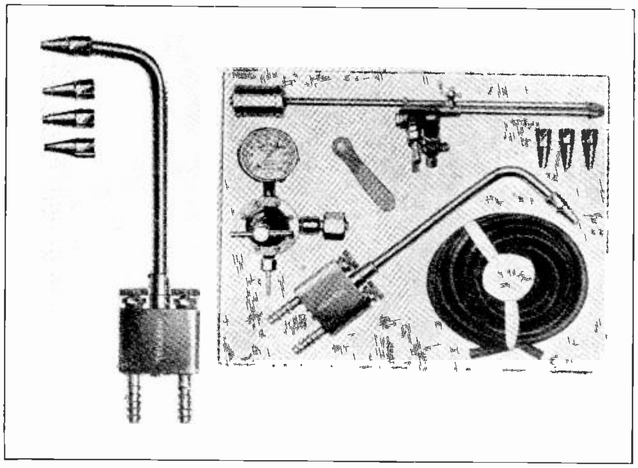

Fig. 38. On the right is shown a complete lead burning outfit, with the exception of the gas cylinder, and on the left is shown a larger view of the torch with its adjusting screws and extra tips for obtaining various sized flames.

38. LEAD BURNING

After the cells are back in place and the covers sealed, the next step is to connect the cells together in series by means of connector straps running from the positive post of one cell to the negative of the next, attaching these straps to the terminal posts by a process known as **lead burning**.

This is not really a burning process but merely refers to the melting or welding the lead of the straps and posts together, to make a very rugged and low-resistance joint that will carry the heavy battery currents at low voltage.

Connections that are properly made in this manner are mechanically strong and will not become loosened by vibration. They will also resist corrosion much better than bolted connections would.

For lead burning a small and intensely hot flame is required. These flames are generally obtained by a combination of two gases such as oxygen and acetylene, oxygen and hydrogen, or oxygen and illuminating gas.

Compressed air instead of oxygen is sometimes used with illuminating gas or acetylene.

Where regular city gas or illuminating gas is available, oxygen can be purchased in steel cylinders and used with this gas. In other cases both oxygen and acetylene can be purchased in cylinders, and the two gases used together by means of a mixing valve and light weight torch, such as shown on the left in Fig. 38.

On the right in this figure is shown a complete lead burning outfit with the exception of the gas cylinder. This outfit consists of the torch and mixing valve, pressure-regulating valve and gage, a trap and valve for the city gas line, extra tips for the torch, and a length of small flexible rubber tubing for connecting the torch to the gas cylinder and gas line.

Both of the torches shown in Fig. 38 have the gas mixing valves with their adjusting screws attached directly to the torch. Mixing valves can also be obtained for mounting on the bench so that one tube will carry the mixed gases to the torch, thus providing a little more flexibility in handling the torch.

Fig. 39 shows a torch of slightly different type, with one of its tubes connected to the water trap on the gas line and the other tube connected to the pressure-regulating valve on the oxygen cylinder.

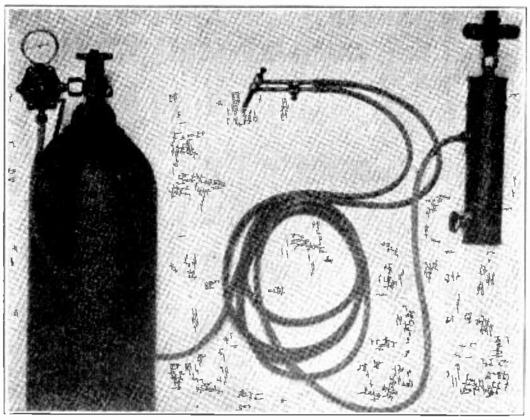

Fig. 39. This view shows the method of connecting a lead burning torch to the gas cylinder and piping, and also shows the mounting of the pressure regulating valve on the gas cylinder.

39. ADJUSTING THE LEAD BURNING TORCH

In order to do a good job of lead burning it is very important to have the correct pressures and mixtures of the different gases. The gases which are obtained in steel cylinders are stored in these cylinders under very high pressure, and this is the reason for the necessity of the pressure-regulating valve, shown in Figs. 38 and 39.

This valve when properly adjusted allows the gas to escape very slowly from the cylinder, and keeps it supplied at the proper pressure to the mixing valve and torch. When oxygen and hydrogen, or oxygen and acetylene are used each gas should be at a pressure of about 2 lbs. per square inch. When using oxygen and illuminating gas the oxygen should be at about 10 lbs. pressure and the illuminating gas at whatever pressure it is supplied, which is generally about 8 ounces.

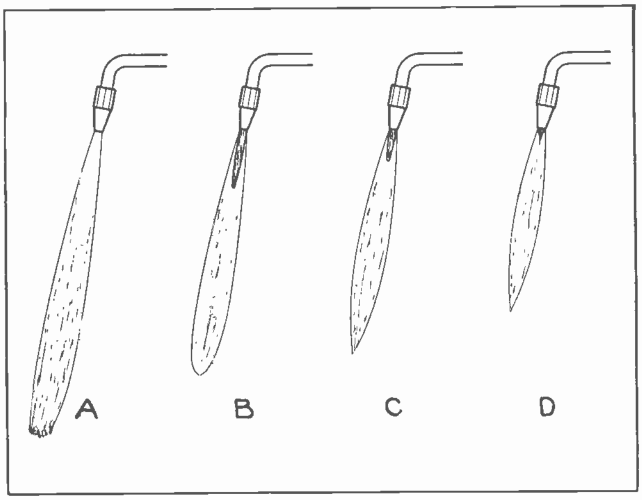

Fig. 40. The above sketch clearly shows the various steps in adjusting a lead burning torch. Examine each of these views very carefully while reading the accompanying explanation.

With these pressures right it is a comparatively simple matter to mix the gases in the right proportions with a mixing valve. This adjustment, however, is of the greatest importance in obtaining the proper kind of a flame for a good job of lead burning.

If too hot a flame is used the lead will oxidize rapidly on the surface and make the welding or uniting of the strap and post very difficult or next to impossible. If the flame is not hot enough the work is very slow and before melting temperature is obtained at the desired points, the entire terminal may be heated too much by the spread of heat and may melt down and run on to the battery.

The illuminating or acetylene gas is used to supply the body of the flame, and the oxygen is used to increase the heat of the flame. If too much gas or too little oxygen is used the flame will be yellow and will tend to carbonize and blacken the surface of the lead, making the burning or welding job very difficult. A plain gas flame doesn't give sufficient heat for this work.

If too much oxygen is used the flame will be too hot and the excessive heat and excess of oxygen will tend to oxidize the surface of the lead, giving it a yellow or sort of rainbow color, and producing a wrinkled and rather tough skin on the surface.

When a torch is first lighted with only the gas turned on, the flame will be long and yellow, with a soft brushy tip shaped as shown at "A" in Fig. 40. Then when the oxygen is first admitted, by means of the mixing valve, a slender blue flame will appear within the yellow flame near the tip of the torch, as shown at "B" in Fig. 40. This greatly increases the heat of the flame but doesn't yet produce sufficient heat for satisfactory lead burning.

As the proportion of oxygen is increased the blue flame gets shorter and hotter, forming a small blue cone which will be shaped as shown at "C" in Fig. 40. With the ordinary lead burning torch the oxygen should be adjusted until this blue flame is from

⅜ to ½ inch in length, with its tapered sides fairly straight or slightly full, and its tip very slightly rounded.

If too much oxygen is admitted the blue flame becomes very small and sharp-pointed as shown at "D" in Fig. 40, and the flame will be too hot and will tend to oxidize the lead. Admitting still more oxygen will often cause the flame to blow completely out on the ordinary small lead burning torch.

When the flame is correctly adjusted as at "C" in Fig. 40, it is then ready to use for lead burning.

The hottest part of the flame from a torch of this kind lies just beyond the tip of the blue cone, so the flame should be held in such a position that the blue cone almost touches the surface of the lead to be melted. Experience and practice will soon show the correct position for holding this flame.

It is very important to remember that to perform a good lead burning job all of the lead surfaces that are to be welded together must be absolutely clean and free from dirt, scum, or grease of any kind.

The inner surface of the openings in the connector straps can be cleaned and also reamed to fit the posts by means of a hand reamer, such as shown in the upper view in Fig. 41, while the tops of posts and various other surfaces can be cleaned with a wire brush, such as shown in the lower view in Fig. 41, or with a coarse file.

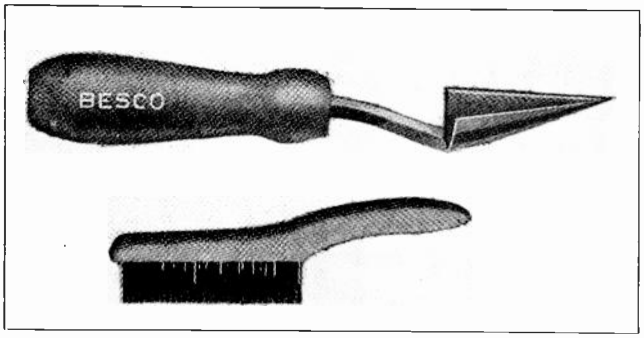

Fig. 41. Above is shown a convenient type of combination lead scraper and reamer, and below is a wire brush such as used in connection with lead burning on storage batteries.

40. PROCEDURE FOR BURNING A CONNECTION

Before starting to burn a connector strap in place on the terminal posts of a battery one should see that the tops of the posts properly fit the circular lugs of openings in the strap ends, so that there are no large openings between the post and strap, or otherwise the molten lead will run through on to the top of the battery.

The top of the post should project only about half way up through the opening in the strap. If the crack around the edge of the post is practically closed or only very small, the top of the post can be softened with a torch flame, and by pointing the tip of the flame into this corner between the post and strap and working the flame round and round in the cup-like depression, the lead of the post and strap will be melted and run together in a smooth, rounded joint.

The torch should then be removed quickly by raising it straight up. Additional lead melted from the tip of a slender lead filler stick or bar can now be run into the cup to build up the post a little at a time, **thoroughly welding each added bit of lead to the top of the post and to the strap.**

Right here is a point on which many inexperienced battery men fail to produce a good lead burning job. A good permanent connection can be made only by having the built up top of the post and the upper half of the strap connection melted together as one, so it will not do at all to merely run or drip hot lead from the "filler stick," or bar, onto the hardened or cold metal of the cup as the hot lead will not unite with cold lead that has been allowed to harden.

There is always a slight, almost invisible, film or scum which forms on the surface of the lead almost immediately when it cools and this film will prevent additional molten lead from properly uniting with the lead beneath, making a very weak joint and one that offers very high resistance to the flow of current through the battery connections.

For this reason the surface of the lead in the bottom of the cup must first be melted by momentarily applying the torch, before additional molten lead is run in. This requires a sort of double operation with the torch flame that can be acquired only by practice.

In order to get the molten lead from the filler stick into the cup before the molten spot in the bottom cools, it is necessary to keep the torch playing on the molten spot and feed the end of the filler bar into the flame at the same time. This requires plenty of practice because there is quite a tendency for the end of the strap to become overheated and melt down, making it very difficult to complete the connection because the solid ring or lug on the strap end is needed as a form or mold to hold the molten lead and build up a good connection.

If the strap edge is accidentally melted down in this manner it is often better to remove the strap entirely and replace it with a new one. This trouble can be avoided by being very careful to keep the torch flame directed into the center of the lug and not allow it to play for any length of time over the edges of the strap lug.

It is also a good plan to build one post only part way up and then work on another post for a short time, giving the strap on the first one time to cool. By working from one connection to another, and building each one up a little at a time in this manner, none of the terminals is as likely to overheat.

Where only one or two connections are being worked upon the strap can be cooled occasionally by placing a wet cloth around it. When doing this, however, be extremely careful not to get any water

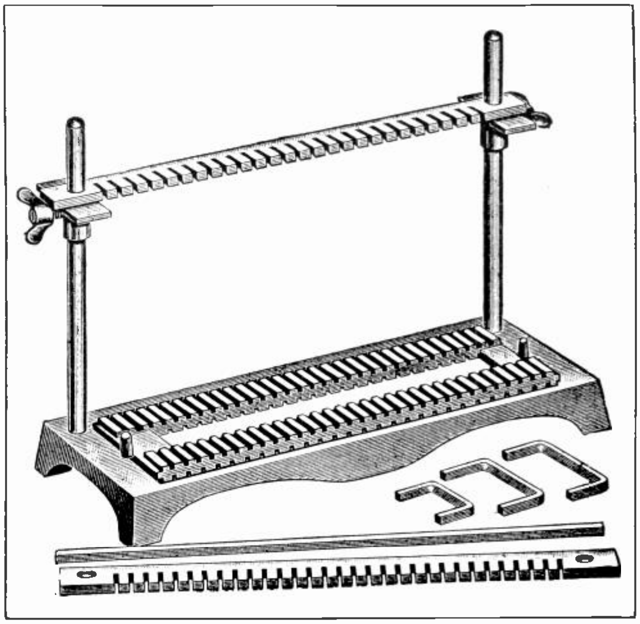

Fig. 42. Convenient racks of the above type are used for grouping and holding plates when burning on the terminal lugs on plate connectors.

into the cup, or it may cause molten lead to be blown into one's face when the lead burning is resumed.

When the post has been built up flush with the top of the lug or ring on the strap a very neat job can be done by adding a little more lead, and slightly rounding off the top of the connection.

This is a very critical operation and requires considerable skill and accuracy to avoid running the lead over the edge and melting down the side of the strap lug. Before placing this little additional cap on the connection it is well to let the work cool somewhat and brush off the top surface with a wire brush so that it is bright and clean.

The very center of this spot can then be slightly melted with the torch and a medium sized drop of lead run onto it. Then by raising the torch slightly and using a part of the flame which is not quite so hot, and running this flame quickly around in a circle the drop of molten lead can be pushed out just to the edge of the connection, making a very smooth and neat-appearing cap.

One should always be very careful not to jar or move a lead burned connection until the lead has had time to cool and harden, or otherwise the lead may be caused to crystallize as it sets, making a very weak and high-resistance joint.

41. CAUTION

Extreme care should be used when working with a torch on batteries that have just been removed from the charging line, as the cells may have quite a little hydrogen gas under their covers. This gas is highly explosive, and if a flame is brought near the small vent openings in the cell caps it is likely to blow the caps or covers completely off the cell.

It is, therefore, best to remove the vent caps and blow out each cell with compressed air if it is available. If no air pressure is available gas may be burned out by removing all vent caps, examining the electrolyte to see that it is below the lower edge of the vent hole tubes, and then using a soft flame with all oxygen turned off.

Standing at arm's length from the battery direct this flame into each vent hole for a second or two, and any gas will be safely burned out.

After the gas has been removed in this manner the battery may be safely worked upon. It is good policy, however, to have all vent plugs out when using a flame on the top of a battery, even after the gases have been removed, because it is still possible that some additional gas might form within the cells. This same precaution of removing vent caps should also be observed when batteries are placed on a charging line, or otherwise the hydrogen gas generated while they are charging may be ignited by a spark at one of the clips or charging connections.

Battery rooms in which large power plant batteries are located, or rooms in which a large number of small batteries are being charged or plates being formed, should always be kept well ventilated to avoid the accumulation of large quantities of hydrogen gas and the danger of serious explosions.

42. ASSEMBLING PLATE GROUPS. MOLDING STRAPS AND POSTS

The lead burning torch is also used when assembling plate groups, for welding on or attaching the terminal posts to the tops of the plate lugs.

Fig. 42 shows a burning rack used for spacing and holding the plates in a vertical position while the terminal posts are burned on to them. The small square bars shown beneath this rack are used for lengthening the lugs on plates, by laying the plate flat on a piece of hard asbestos or similar material, and using the little bars around the lug as a form in which to melt additional lead and run it together with the lead of the plate lug.

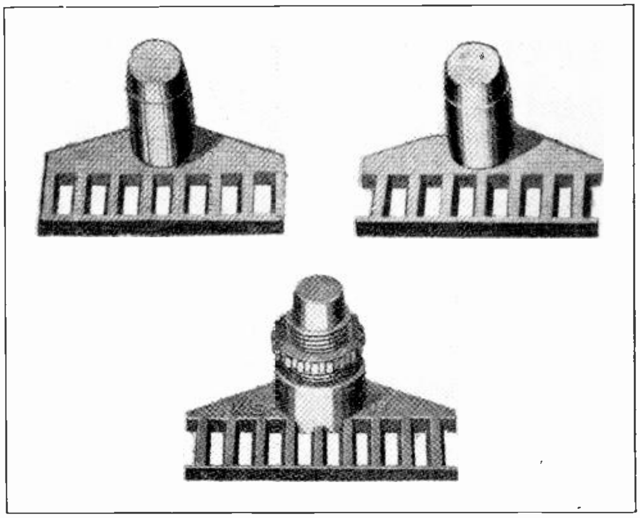

Fig. 43. Plain and threaded terminal posts and plate connectors for attaching positive and negative plates together in groups.

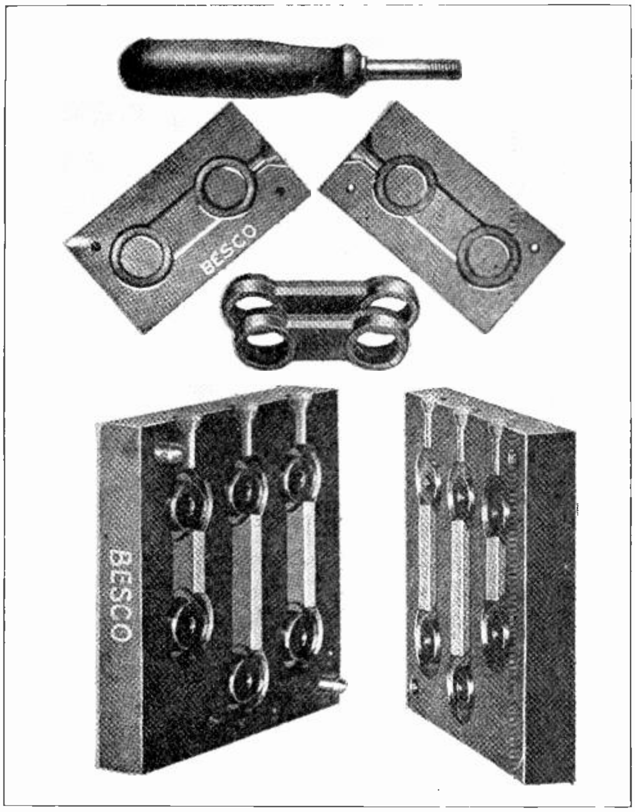

Fig. 44. Above are shown two types of straps or connector molds for molding lead straps of different lengths to be used in connecting together the separate cells of automotive batteries.

Fig. 43 shows several terminal posts which have been cast from lead and are ready for attaching to plate groups. The one on the upper left is a plain post for a positive group, and the one on the upper right a plain post for a negative group. The one shown below is called a "threaded type post" and has a cast lead nut which screws down on top of the cell cover after it has been slipped over the post.

Battery terminal posts and connector straps can be purchased from various battery supply houses, or they can be molded and cast from hot lead by means of special molds right in the battery shop.

Fig. 44 shows two types of strap molds, the one in the upper view being made for molding single straps of a certain length and the gang mold in the lower view is made for molding straps of three different lengths.

These molds are simply clamped in a vise in an upright position and the molten lead poured from a lead ladle into the funnel-shaped openings at the top of the mold.

When the mold is full and the lead has been given time to cool enough to set or harden, the mold is then removed from the vise or clamp and pried carefully apart. The straps can be removed by tapping on the back of the mold, or by prying up the filler tips and pulling them out with a pliers.

Carbonizing or blackening the surface of the mold with a plain gas flame torch will help to remove the straps more easily and prevent them sticking in the mold.

The upper view in Fig. 45 shows a combination mold for casting threaded posts and lead nuts to go with them, while the lower view in this figure shows a simple mold for pouring straight slender bars of lead which are used for filling strap lugs and making cell connections.

Fig. 46 shows several types of post cutters which are used for trimming off the tops of battery posts that are too long, in order to make them properly fit the strap lugs and to keep the straps down close to the top of the battery.

43. PREPARATION OF BATTERIES FOR STORAGE WHEN NOT IN SERVICE

There are two common ways of storing batteries when they are not in service, one known as the **dry storage** method and the other as the **wet storage.** If a battery is to be taken out of service for a long period of time and it is not possible to give it a monthly charge it should be stored dry.

For **dry storage** the following procedure should be taken:

1. Give the battery a thorough charge.
2. Remove the cell connectors and draw out the elements.
3. Remove the covers from the elements and separate the positive and negative groups.
4. Immerse the plates in distilled water for 10 to 12 hours keeping the positive and negative separate.
5. Remove the plates from the water and allow them to dry. If the negatives heat up when exposed to air they should be immersed in the water again

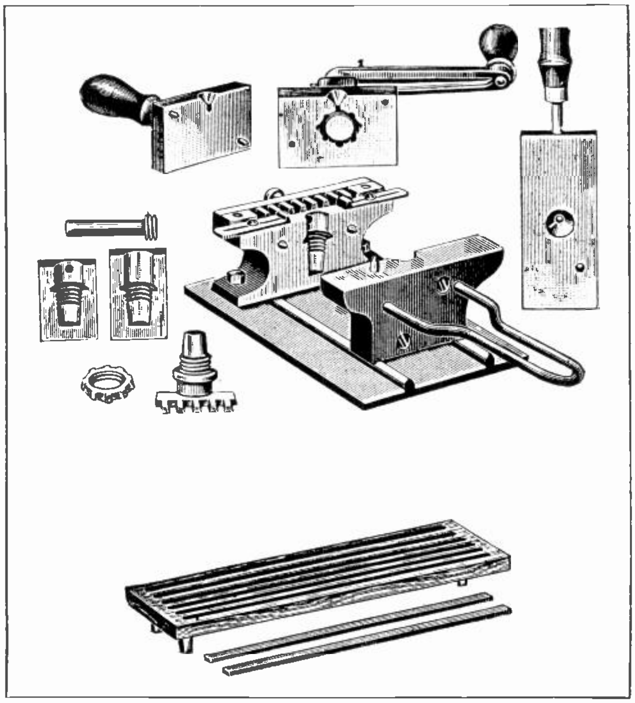

Fig. 45. Above is shown a combination mold used for casting threaded type posts and nuts, while below is a simple mold used for casting plain lead bars to be used in filling lugs when burning on connections.

to cool them, repeating this as long as they tend to heat, and then drying them thoroughly.

6. If the old separators are wood they should be discarded; if rubber they may be saved if they are in good condition. Clean the cell covers and all parts thoroughly and allow to dry.

7. When plates are perfectly dry put the positive and negative groups together, using cardboard instead of regular separators, and replace them in the jars or case in their proper positions.

8. Replace covers and vent plugs but do not seal the covers. Store in a dry place until ready to be put into service again.

9. To put the battery in service install new separators and reassemble the plate groups in the cells, replace the covers and seal them. Fill the cells with 1.320 specific gravity electrolyte, and allow the battery to stand for ten to twelve hours before putting it on charge. Then place the battery on charge at the normal rate of 1 ampere per positive plate until the gravity stops rising and remains stationary for five hours. At the end of the charge the gravity should be between 1.280 and 1.300. If the gravity is not between these limits it should be adjusted by withdrawing some of the electrolyte and replacing it with 1.400 electrolyte if the gravity is too low, or with distilled water if the gravity is too high.

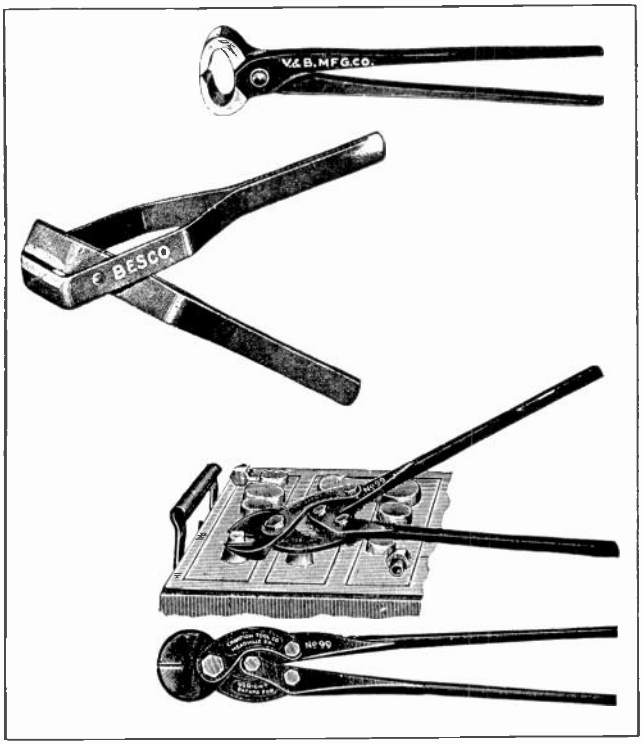

Fig. 46. Several different styles of posts cutters or trimmers for clipping off the tops of battery posts.

For placing a battery in **wet storage**, first give it a complete charge and then remove it from the charging line, and clean the outside of the battery thoroughly. Apply vaseline or light cup grease to the terminals and check the level of the electrolyte, adding distilled water if necessary.

Store the batteries on dry shelves, allowing a little air space between each battery and the next. Once each month replace with distilled water any electrolyte lost by evaporation and then give the battery a charge in the usual manner.

Before putting back in service batteries which have been in **wet storage** give them a thorough charge and make a high rate discharge test.

44. BUILDING NEW BATTERIES

After the parts for a new battery have been assembled and the battery is ready to be charged the procedure should be as follows:

First fill the battery with 1.250 specific gravity electrolyte. If stronger electrolyte is used the plates may overheat and become damaged.

After filling let the battery stand from six to twelve hours to allow the electrolyte to soak well into the plates and separators.

Next put the battery on charge at 1 ampere per positive plate. (5 amperes for 11-plate batteries, 6 amperes for 13-plate batteries, etc.) Keep the battery on the charging line until the voltage reaches from 2.4 to 2.5 volts per cell, with voltage test being made while charging. This voltage indicates that the active material on the positive plates is pure lead peroxide and that on the negative pure sponge lead. A gravity reading at this stage would be slightly below 1.250 if wet separators were used in assembling the battery.

The next step is to "set" the gravity by emptying out the electrolyte and replacing it with an equal amount of 1.350 specific gravity electrolyte. Then put the battery back on charge at 1 ampere per positive plate to equalize the electrolyte, and take the gravity reading after the battery has been on the charging line 30 minutes. The gravity should then be between 1.280 and 1.300. If it is below 1.280 withdraw some electrolyte and replace it with 1.400 specific gravity acid and put the battery back on the charging line again for 30 minutes, before taking another reading. If the gravity is above 1.300 remove some of the electrolyte and replace it with distilled water.

Correcting the gravity of a battery in this manner is sometimes known as "balancing", and it can be done while the battery is on the line and charging.

When the battery is ready to be removed from the line each cell should have a voltage of 2.4 to 2.5 volts, and the gravity should be between 1.280 and 1.300. **Caution: Be sure that the battery is charging at the correct rate when making a voltage test.** Otherwise the above mentioned voltages will not be obtained.

45. SHOP EQUIPMENT

Quite a number of our graduates sooner or later start a shop and enter into a battery repair business of their own, as it doesn't require a great deal of capital or material to start a shop of this kind.

The following is a list of tools and equipment needed for a small shop:

1 10 or 20 battery Tungar charger
1 battery steamer and still
1 lead burning outfit
1 plate burning rack
1 hot-plate and compound pot
1 6-in. vise
1 low-reading voltmeter (Cadmium type)
1 temperature correction thermometer
2 hydrometers
1 pair of terminal tongs
2 pair nut pliers
1 10-in. screw driver
1 6-in. screw driver
1 battery carrier
1 putty knife
1 Cherokee tool for reaming down size of tapered posts
1 set of post builders
1 set of steel number stamps
1 set of positive and negative stamps
1 paint brush
2 wire scratch brushes
1 separator trimmer
1 triangular lead scraper
2 Vixen lead files
1 pair of end cutters
1 drill press and drills ½", ⅝" and ¾"
1 plate press
1 high-rate discharge set
1 cycling set
1 acid container
1 funnel.

Other tools such as saw, hammer, etc., will be found convenient. If a lead pot is used to melt lead for molding posts, straps, etc., in the shop, a set of assorted molds can be added.

Battery plates, separators, posts, straps, battery jars and cases, etc., can all be purchased from any regular battery supply company.

If you plan to open a shop of this kind at any time, remember at all times that courtesy, promptness, and first class workmanship are the essentials in building up trade and holding customers once obtained.

A sign on your place of business and some display of your work or supplies, along with some novel window attraction in the front of the shop, are great helps in getting attention and business.

Small ads placed in the local newspaper or little folders left at the homes of car owners in the locality will also help obtain business.

In many cases co-operative arrangement can be made with other local garages which may not have a battery shop, they sending their customers who need battery service to you, and you sending your customers who need general ignition or mechanical service to them.

46. GENERAL

Most of the material on lead plate batteries so far in this Section has been applied to the common small storage battery, such as used by the millions for automotive and radio work, as this is the field in which you will be most likely to have opportunity to make profitable use of storage battery knowledge.

However, it is well to keep in mind that there are numerous installations of large lead plate storage cells in power plant batteries, and that most of the general information covered in this Section can be applied to these batteries also.

Large cells such as shown in Fig. 2 and having plates with a surface area of several square feet are quite commonly used. These plates are generally set on porcelain bars or insulators laid in the bottom of lead-lined wood boxes.

Dozens or hundreds of these huge cells are then connected in series or series-parallel by means of heavy lead bus bars or lead coated copper cables, and kept in well-ventilated battery rooms at power plants or substations where they are used.

Such batteries are generally kept charged by means of motor-generator sets supplying D. C. at the proper voltage. In some cases the batteries are kept normally connected across the D. C. power busses, so that they are kept constantly charged up to the bus voltage, and ready to supply or feed current to the busses and load, as soon as any failure of the generators or any voltage drop on the system occurs.

In other cases special motor-generator sets known as **boosters** are kept connected to the batteries and are equipped with special relays or field connections so that they start charging the batteries at any time their voltage drops a certain amount.

Some large battery installations are equipped with additional cells known as **end-cells,** which can be manually or automatically cut in series with the main group as the voltages of the main battery drops slightly during discharge. By cutting in these end-cells one at a time the line voltage can be kept constant.

When charging batteries equipped with end-cells the steps of the switching process are just reversed, and the cells cut out one at a time after each has been charged the right amount. This gives the longest charge to those cells which were longest in service.

The voltage, electrolyte gravity, and the temperature are all kept carefully checked on such large battery installations.

It is well to give any storage battery about 10 to 15 per cent overcharge at regular periods to keep them in best condition.

Reversible **ampere-hour meters** are often used with batteries in power plants, farm lighting plants, emergency lighting installations, etc., to keep accurate records of the amount of energy flow during charge and discharge, and to enable the operator to see that the right amount of charge is given both on normal charging and for the periodic overcharges.

47. EDISON NICKLE-IRON STORAGE CELLS

Edison storage cells differ from lead plate storage cells in that no lead is used in their construction; nickle being used for the positive plates and iron for the negative. The electrolyte is also different and instead of using sulphuric acid the Edison cell uses an alkaline solution of potassium hydroxide and distilled water.

The positive plates for these cells consist of a layer or group of perforated steel tubes ¼ inch in diameter and 4¼ inches long, which are filled with alternate layers of nickle hydrate and pure flake nickle. The nickle hydrate is a green colored powder-like compound and is the real active material in the positive plates, while the flake nickle is put in to improve the electrical conductivity and reduce the resistance of the nickle hydrate.

These two materials are packed into the thin perforated steel tubes under high pressure. The tubes are then banded with eight equally spaced steel rings which fit tightly around the thin walled tubes, reinforcing and strengthening them, and preventing them from bulging with the tendency of the active material to expand.

The proper number of these tubes, according to the size of the plates and cell, are then clamped in a steel frame to make up the plate. For plates longer than 4½ inches two or more sets of tubes are arranged end to end and held in a nickle plated steel frame, as previously explained.

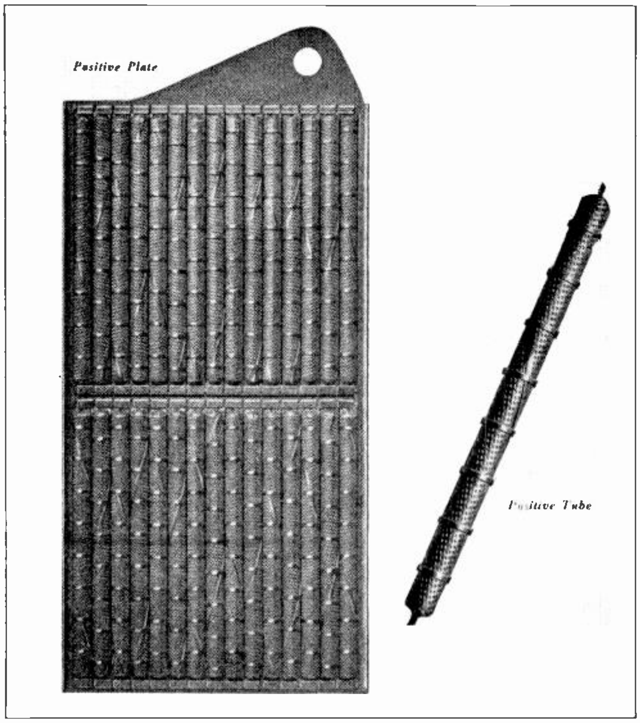

Fig. 47. This excellent photo view clearly shows the construction of the positive plate and individual positive tube for an Edison nickel-iron storage cell. Note the rugged construction of these parts. (Courtesy of Edison Storage Battery Co.)

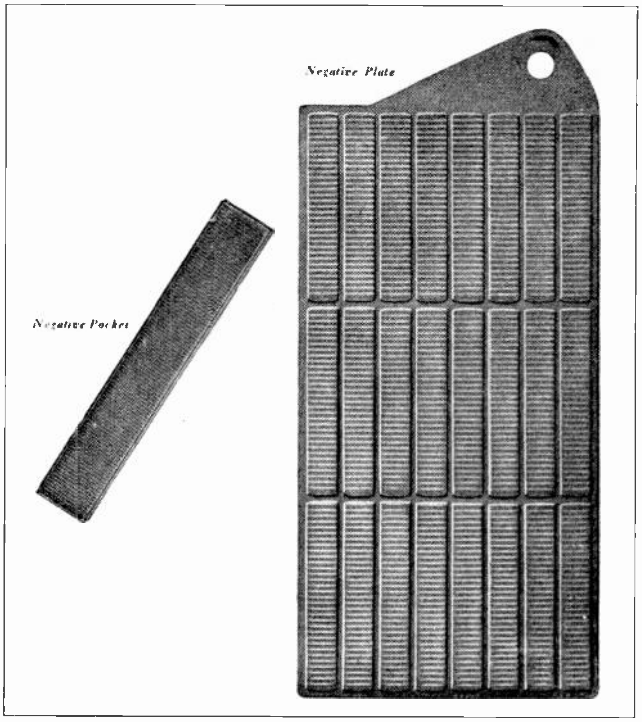

Fig. 48. Photo of complete negative plate and one separate negative pocket used in nickel-iron storage cells. The active material is contained within these pockets which are all grouped together in a steel frame. (Courtessy of Edison Storage Battery Co.)

Fig. 47 shows a complete positive plate for an Edison storage cell and also one of the separate positive tubes from which the plate is made up. Note the manner in which the tube is constructed of a spirally-wound, thin steel ribbon, and also note the numerous small perforations to allow the electrolyte to penetrate through the active material in the tube.

The negative plates in Edison storage cells consist of a group of perforated flat steel pockets which are filled with iron oxide as the active material of these negatives. Iron oxide is also commonly called "black iron rust".

A group of these small pockets are then arranged edge to edge and clamped in a steel frame to make up the complete negative plate, as shown in Fig. 48. These positive and negative plates are then assembled in groups by clamping them securely on a threaded steel rod with nuts which draw them tight, the plates being equally spaced by means of steel washers between their lugs where they attach to the rod. A vertical terminal post is also securely attached to this rod.

The positive and negative plate groups are then meshed together similar to those of lead plate storage cells, except that in the Edison cells slender, hard rubber rods called "pin insulators" are placed vertically between the positive and negative plates to act as separators and insulators.

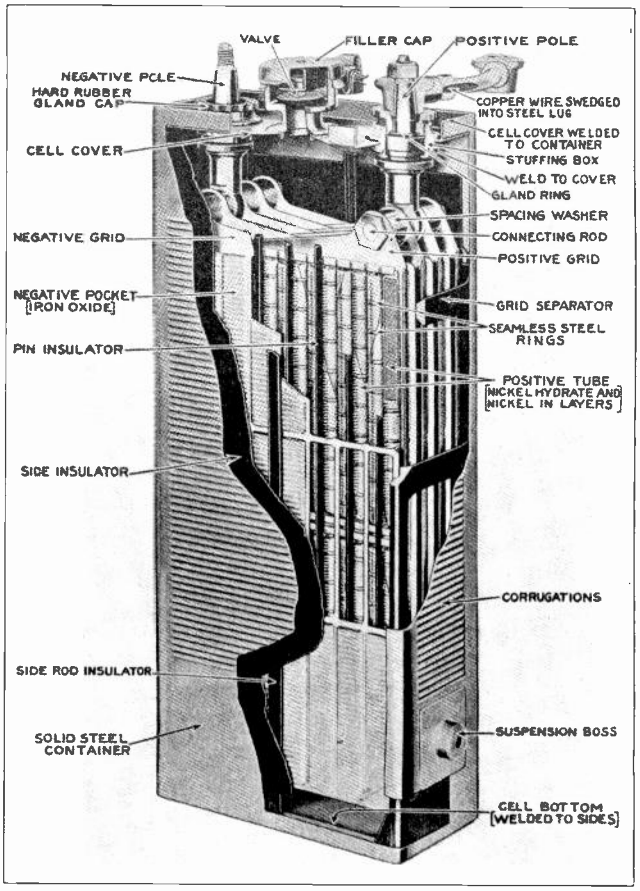

Fig. 49. This excellent cut-away view clearly shows the construction and parts of an Edison nickel-iron storage cell. Note the very rugged construction throughout, and also the strong sheet metal container used with these cells. (Courtesy Edison Storage Battery Co.)

The assembled positive and negative groups or cell elements are then placed in containers of nickle plated steel with welded seams. Thin sheets of hard rubber are placed between the elements and the metal container to act as insulators, and after slipping a hard rubber washer down over each terminal the metal covers are welded permanently in place on the containers. This permanent closing of the cell is possible because of the very long life of the cells, and due to the fact that they require practically no mechanical servicing or attention throughout their life.

The sides of these containers are corrugated to give maximum strength with light weight material. The terminal posts are insulated and sealed into the cover by means of rubber gaskets.

The cell tops are fitted with combination check valves for allowing the escape of gases formed in the cell, and a filler cap which can be opened to add distilled water to the electrolyte or to change the electrolyte when necessary.

Fig. 49 shows an excellent sectional view of a complete Edison alkaline or nickle-iron cell. Note carefully the arrangement of all the parts, and the general construction of this cell.

The completed cells are filled with a solution of potassium hydroxide and water, the specific gravity of which should be 1.200. This electrolyte doesn't attack iron or steel the way sulphuric acid does, and it is thus possible to use the steel containers and obtain a much more ruggedly built battery. A group of cells of the desired number are commonly assembled in trays or frames for convenient handling.

The voltage of Edison nickle-iron storage batteries when fully charged is 1.2 volts per cell which you will note is a little lower than that of lead plate storage cells.

48. ADVANTAGES OF NICKLE-IRON CELLS

The Edison cell has a number of decided advantages, however, which make it much more suitable for many classes of work than lead plate storage cells are.

Some of these advantages are as follows:

The all-metal construction provides a cell of maximum mechanical strength and durability, and the construction of the plates makes them much more rugged and able to stand severe vibration, such as batteries are subjected to when used on electrical vehicles or in train lighting service.

The electrolyte, being of a non-acid nature, will not corrode any of the metal parts of the battery or other metal parts on which it might be spilled. Neither does this alkaline electrolyte solution attack or use up the active material of the plates when the battery is not in use, as does occur with lead plate storage batteries if they are not frequently recharged. For this reason Edison cells can be left standing idle for long periods in a discharged condition without injury.

These cells can be reversed and charged backward, or can be charged and discharged at very heavy rates, or even short-circuited without injury. The active material of the plates, being encased in steel tubes and pockets, doesn't shed so these cells do not have to be dismantled for plate repairs or cleaning out of sediment.

Another great advantage is that the plates of Edison cells are not subjected to warping and buckling under excessive current rates, and, being equipped with hard rubber separating strips, it is almost impossible for them to become short circuited as so often occurs with plates of lead and acid storage batteries.

49. CHARGE AND DISCHARGE ACTION

The basic principle of the Edison cell is the reduction and oxidation of metals in an electrolyte which doesn't combine with or dissolve the metals or their oxides. Due to this fact the specific gravity of the electrolyte is always constant whether the cell is in a charged or discharged condition.

Hydrometer readings are, therefore, of no use in determining the state of charge of Edison storage cells.

After about 300 cycles of charge and discharge the electrolyte gravity tends to become lower, and the old solution should be emptied out and replaced with new solution of the correct gravity.

During charge the chemical reactions in Edison storage cells are as follows: The nickle hydrate or active material of the positive plate becomes oxidized and is changed to nickle oxide; while the iron oxide or active material of the negative plate is reduced to metallic iron.

Thus, for practical purposes, the charged positive plate can be considered to consist of nickle oxide (NiO_2) and the charged negative plate consists of pure iron (Fe).

During discharge some of the potassium from the electrolyte in the cells unites with the nickle oxide of the positive plate and reduces it to a lower oxide of nickle (Ni_3O_4), and some of the oxygen unites with the pure iron, changing it to iron oxide (Fe_3O_4).

When the cell has been discharged these actions can be reversed and the plates and electrolyte both changed back to their original charged condition, by passing current through the battery in the direction opposite to the flow during charge.

50. CHARGING NICKLE-IRON CELLS

The charging voltage required for Edison batteries is from 1.7 to 1.85 volts per cell. These batteries can be conveniently charged by means of the constant current system, or with batteries connected in series to the source of direct current of the proper voltage.

They are also sometimes charged by the constant potential or parallel method, but the handling of this system is very critical, because if the generator voltage rises at all above 1.7 volts per cell there will be a very heavy current surge through the battery, which may cause it to overheat.

External series resistances are sometimes connected in series with each battery when they are to be charged by the constant potential or parallel method. These resistances serve to limit the current flow and prevent heavy surges and charging current through the batteries.

The open circuited voltage of a fully charged Edison storage cell is about 1.5 volts per cell, but this falls off very rapidly as the rate of discharge is increased so the average discharge voltage of a well-charged cell is about 1.2 volts.

When the voltage drops to .9 volts per cell these batteries are considered to be discharged and should be put back on the charging line again. In many installations of batteries of this type they are recharged as soon as the voltage falls to 1 volt per cell. Nickle-iron storage batteries can be completely discharged, however, without damaging the plates as occurs with lead plate batteries.

While a hydrometer is of no use to indicate the state of charge of the nickle-iron storage cell, it should be used occasionally to check the specific gravity of the electrolyte to determine whether the solution should be changed or not.

As previously mentioned, the gravity of the electrolyte gradually becomes lower with repeated cycles of charging and discharging, and when this gravity drops as low as 1.160 it should be changed and renewed with 1.200 gravity electrolyte.

Edison cells should not be operated with electrolyte of lower gravity than 1.160, or they become sluggish and lose capacity and are also subject to breakdown on severe service.

Caution: When using a hydrometer to test the specific gravity of the electrolyte in nickle-iron cells, if this device has been used with lead plate cells be sure that it is free from all traces of acid. Be careful never to use with Edison cells any utensils that have been used with sulphuric acid, as even a slight amount of acid may cause serious trouble or ruin the cells if it gets into the alkaline electrolyte solution.

51. INTERNAL RESISTANCE AND EFFICIENCY

The internal resistance of nickle-iron cells is approximately three times as high as that of lead storage cells of the same capacity and voltage, and will cause a voltage drop of about 7% of the open circuit cell voltage when the cell is discharging at the five-hour rate.

Edison cells have a rather peculiar temperature characteristic in that their capacity falls off very rapidly when they are operated at cell temperatures below about 50° F. Under normal conditions, however, the charge and discharge action generally keeps the internal temperature of the cells considerably above this point, particularly if the batteries are enclosed in a box with temperature insulation when they are to be used in cold places.

The efficiency of nickle-iron cells is considerably lower than that of lead storage cells, so they require considerably more current in ampere hours to charge them than can be obtained from them during discharge.

Their efficiency is about 60% in ordinary operation. This lower efficiency is more than made up for, however, by the many other advantages previously mentioned which these cells have over lead plate batteries.

52. CARE OF NICKLE-IRON STORAGE CELLS

In order to give the most satisfactory service nickle-iron storage cells should be recharged often enough to keep their voltage above .9 volt or 1 volt per cell, and will give still better service if used in such a manner that they can be given frequent boosting charges at intervals between the discharge periods, in order to keep the voltage up nearly to the full charged value.

It has already been mentioned that the electrolyte in these cells should be renewed approximately once every six or eight months, or after the cells have been charged and discharged about 300 times.

The cells should be refilled with standard refill solution obtainable from the Edison Storage Battery Company. Don't pour out the old solution until you have received the new and are ready to refill the cells with it, as they should not be allowed to stand empty.

When renewing the electrolyte, first completely discharge the battery at normal rate to zero and then short-circuit it for one or more hours. This is done to protect the battery elements. Next pour out half the solution and shake the cell vigorously, and then empty the balance.

Never rinse the cells with water but instead use only the old solution. Never use a galvanized funnel or one that has soldered seams, or anything else of this nature in handling solution for these batteries. Glass, enamel ware, or plain iron funnels and utensils should be used.

Under good operating conditions and with proper care the total life of these cells should be somewhat over 1000 complete cycles of charging and discharging. When the electrolyte level becomes too low due to evaporation these cells should be refilled with pure distilled water, the same as used for lead plate storage cells, except that it is well to use water that has not been exposed to air for any length of time, but which has instead been kept in a corked bottle or sealed container after distilling.

The level of the electrolyte in nickle-iron cells can be conveniently tested by lowering a ¼ inch diameter glass tube vertically into the filler opening, until its lower end touches the tops of the plates. Then, by placing the finger tightly over the top end of this tube, it can be raised out of the cell and will hold a small amount of the electrolyte at its original level inside of the tube.

This level can be measured from the bottom of the tube, thus determining the height of the electrolyte above the plates.

A small piece of rubber tubing fitted tightly around the top end of the glass tube helps to provide a better air seal when the finger is placed against it.

The metal containers of nickle-iron cells must be kept carefully insulated from each other at all times or there will be a small leakage of current between them, and the cell containers may become punctured due to electrolytic action.

The cells and their trays should be kept well cleaned and free from collections of dirt and moisture. They can be cleaned by blowing with compressed air, or with a steam hose, but the steam hose should not be used on the cells while they are located in their compartments.

It is a good plan to coat the tops of these cells with a light coat of rosin-vaseline which has been warmed to about 180°, and thinned to paint consistency with benzine. This material can be applied with a small paint brush. The outsides of the cell containers should be kept painted with some good alkili-resisting insulating paint. Nickle-iron batteries should not be operated at temperatures above 120° F.

53. LOCATION AND CONNECTIONS

When locating nickle-iron cells in storage or carrier compartments, the compartments should be lined with wood and constructed to afford ample ventilation, good drainage, and ease in cleaning. A compartment should be provided with slots about an inch wide, running the full length under each battery tray where bottomless trays are used, and between the trays when trays with bottoms are used.

Openings should be provided in the sides of compartments above the highest point of the battery. These openings should have a total area slightly greater than the total of the bottom openings and they should be located to keep out as much dirt and water as possible.

If the battery is used out-of-doors in cold climates these openings should be closed during cold winter weather.

Nickle-iron cells can be connected in series or series-parallel, the connections being made and tightened under the nuts provided on the top of the terminal poles. Regular steel jumper connectors with terminal lugs are provided with batteries of this type. These lugs seat firmly on the terminal posts if the steel jumper wires are properly bent and shaped to allow them to.

The lugs should never be driven or hammered into place, but should have their jumpers so shaped and adjusted that the lugs slip easily in place where they can be securely locked by means of the nuts.

It is good practice to slightly grease the threads on the terminal posts, after the lugs are in place and before the nut is put on. Make sure that all contact surfaces between terminal posts and lugs are clean before making connections, and always see that all connections are kept tight and clean.

For removing these connector lugs after they have been forced tight with the terminal nuts, a small disconnecting jack or terminal puller is shipped with each battery. This jack can be placed straddle of the terminal post so that it engages the lug and will then pull the lug loose if the screw of the jack is turned.

One should be very careful never to handle flames of any kind around these cells when they are charging or discharging, as explosive gases are liberated from the cells during these periods.

The material covered in this Section on Storage Batteries of common types has been applied particularly to automotive batteries of the lead and acid type, and to nickle-iron storage batteries which are so extensively used for operation of electrical vehicles, and in train lighting, and various classes of signal work.

However, a great many of the principles and rules given can also be applied to larger storage batteries of the lead plate type, which are used in power plant work and which have been generally explained.

A good understanding of the material covered in this Section can be of great value to you in various classes of electrical work, such as telephone, telegraph, railway signal, farm lighting, radio, automotive, and power fields.

COYNE
Electrical School
CHICAGO ~~ ILLINOIS
ESTABLISHED 1899

RADIO

Elementary Principles
High Frequency Energy, Radio Waves
Modulation, Transmission and Reception
Antennas, Tuning, Receivers
Vacuum Tubes
Detectors, Amplifiers, and Oscillators
Principles, Characteristics, Applications
Receiver Circuits, R. F. and A. F. Amplifiers
Transformer, Resistance and Impedance Coupling
Regeneration, Neutrodynes, Superheterodynes
Power Amplification, Volume Control
A. C. Receivers, Power Supply Units
Eliminators, Phones, Speakers
Set Building and Wiring
Testing and Servicing

RADIO

While it is one of the newest branches of electrical work, radio has, during the past very few years, grown to such a tremendous size that it offers one of the greatest fields of intensely interesting and highly profitable work for the trained electrical man.

There are many millions of radio receivers of various types in use in homes in this country alone, and new ones are being made and sold at the rate of several million per year. The installation and servicing of these sets, as well as the repairing and remodeling of older types, creates splendid opportunities for practically trained radio service men, working for dealers, or operating a business of their own with an agency for some good set, and doing service and repair work for their customers.

A great number of trained men are also required for inspection, test, and research work in the factories where these sets are made.

Radio receivers are also becoming a very popular addition to the modern automobile and, within the next few years, there will be several million of these sets sold and installed, thus creating more jobs for the service man.

At this point we wish to emphasize that the field of radio service work is one of the most profitable branches of work that the trained radio man can take up, and offers more numerous opportunities in most any part of the country than do some other branches of radio.

There are also many splendid opportunities for radio operators in broadcasting stations, commercial land stations, aboard ships, on passenger aircraft, at airports, etc. These jobs provide very fascinating work and pay good salaries to properly trained men who operate, adjust, and service the transmitting equipment, and in some cases send code messages where radio telegraph is used.

Modern hotels and apartment buildings are very often equipped with elaborate radio service to all of the rooms, and require a vast system of wiring, outlets, controls, and amplifiers which must be installed and then maintained and serviced by properly trained radio men.

Public address systems with their powerful amplifiers and huge speakers are becoming very common and are extensively used in schools, auditoriums, theatres, and other public buildings, and at outdoor sports and exhibits.

Installing, operating, and servicing this equipment creates another profitable field for radio men.

Talking picture equipment in movie studios and in the thousands of theatres throughout the country also use radio amplifiers, microphones, speakers, etc., similar to radio equipment, and any man with a good knowledge of practical electricity and radio can easily understand and handle this equipment.

Then there is the much newer field of television, which is growing and developing at a tremendous rate, and creating an enormous demand for service men with a good knowledge of radio amplifiers and equipment, and a knowledge of the operating principles, care, and adjustment of television apparatus. This branch offers some of the most fascinating and profitable work in the radio field, and men who get a good understanding of this equipment and get started in this branch at the present time have open to them the same marvelous opportunities that men commencing in the radio field ten years ago had.

Keep well in mind that radio is not an altogether separate subject from electricity, but is merely another application of electricity to a different use, and in circuits using high frequency alternating current as well as direct current.

Your general knowledge of electricity and electrical equipment obtained this far in your course, and the study of this set combined with the careful study of the radio material covered in this section, and the shop practice you can obtain in the Radio Department, should qualify you very well for most any branch of radio work that you might care to undertake. In fact you will be much better qualified because of your general knowledge of electricity than anyone could be by taking only special radio training which did not include general ground work of the laws, principles, and applications of electricity.

It is not the purpose of this Section to cover a great deal of design theory or highly technical problems, but instead it will cover the general nature and principles of radio transmission and reception; and the operation, care, and servicing of radio receivers and amplifiers in particular.

In addition to the opportunities offered in employment by various radio manufacturers and dealers, shipping organizations, commercial land stations, broadcasting stations, aviation interests, theatres, etc., remember also that radio offers some of the finest opportunities for a man who wishes to build up a small business of his own, because it requires very little capital and equipment to start a radio service shop, and your general knowledge of electricity and radio should make you very capable in selling, installing, and servicing any ordinary type of radio equipment.

Many of our graduates are operating very profitable businesses of this kind, and many others are making good money in radio as a side line from their regular employment.

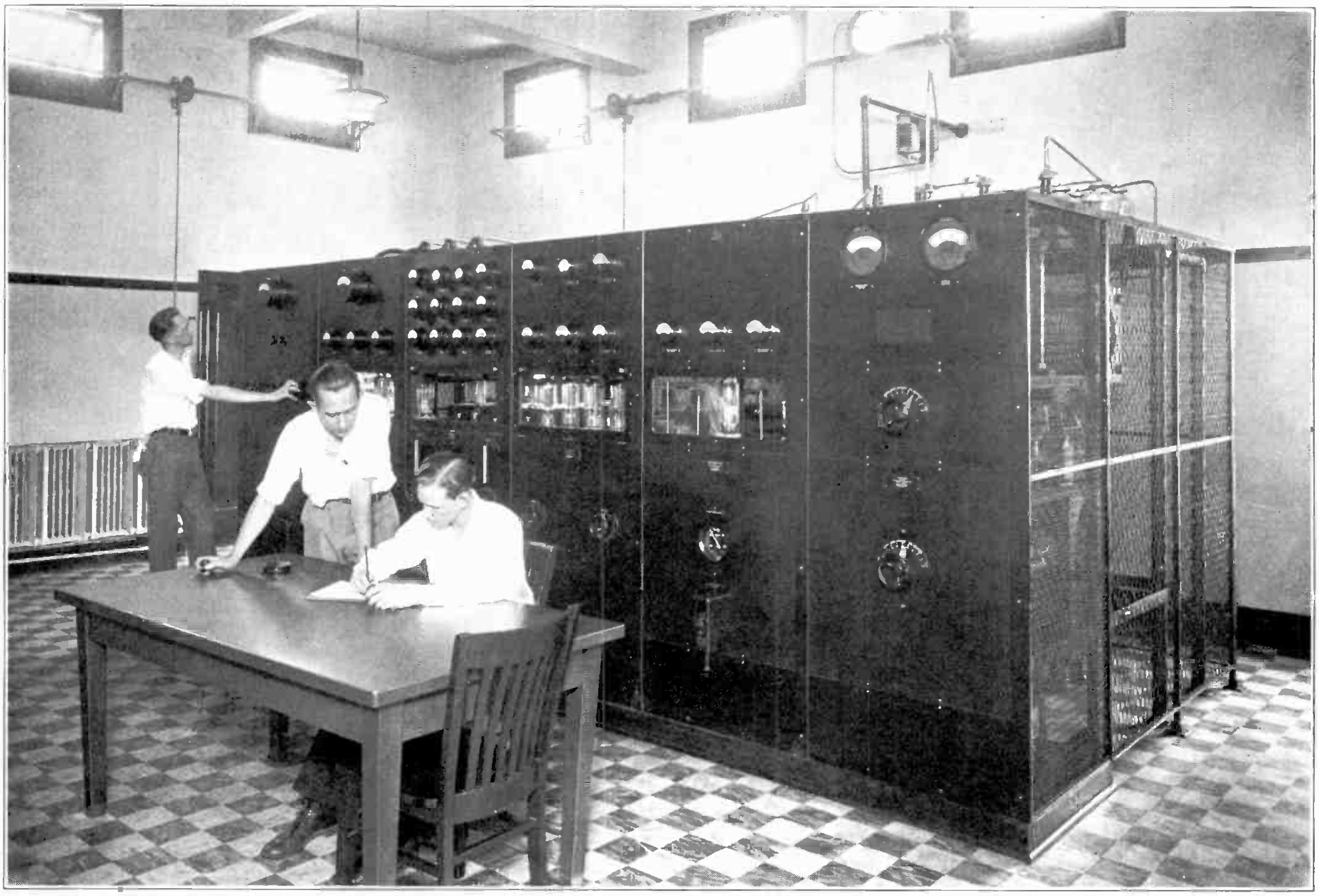

Fig. 1. This photo shows a large modern broadcast transmitter used to transmit popular programs of entertainment and educational material. (Photo courtesy of WMAQ—Daily News Station—Chicago.)

1. BRIEF HISTORY OF RADIO DEVELOPMENT

The term **Radio** is a rather new one, developed within the past ten or twelve years, and applies particularly to the general radiation or broadcasting of messages and radio entertainment and education, the word itself coming from the word **radiate.**

Before 1920 when radio broadcasting began to get its start the term **wireless** was used almost entirely with reference to such equipment.

The first known attempts at wireless communication were made by Professor Steinheil of Munich, Germany, in about 1837. Approximately thirty years later, between 1860 and 1870, a famous mathematician in England named Maxwell proved by theoretical analysis and calculations that wireless communication was possible, but Maxwell did not put his ideas into practical operation.

The next development along this line was made by Heinrich Hertz of Germany, who within a few more years discovered and established the various laws of electric wave transmission, or transmission of energy through the atmosphere without wires. The laws established by Hertz are still used and found dependable today, so Hertz is often called the founder or inventor of wireless.

Due to his early death, Hertz was unable to complete his work and put his discoveries into actual practice, but very shortly afterward Marconi successfully accomplished the first wireless communication, thus completing the work started by Hertz and also proving that such communications were possible over great distances. For this reason Marconi is also often called the father or inventor of wireless.

In early years wireless communication messages were sent from point to point by means of code signals, using the same general principles of transmission and reception as are used today, but with much cruder and more elementary types of equipment.

The first highly valuable use of wireless was to establish means of communication between ships and land stations, from one ship to another, and particularly for sending distress signals in case of a ship in trouble. This is still one of the very valuable and extensive uses of modern radio equipment.

The first transmission of wireless energy was accomplished by means of what was called a **Spark Transmitter.** These transmitters made use of a high-voltage spark or arc across a pair of adjustable electrodes, to set up high frequency current or oscillations in a local condenser and inductance coil circuit, and also in the aerial and ground circuit.

Fig. 2. Console type of radio receiver with automatic tuning feature. Thousands of these sets are in use in homes throughout the country. (Photo courtesy of Zenith Radio Corp.)

This high frequency energy in the aerial circuit sets up combined electro-static and electro-magnetic waves of energy which were transmitted a considerable distance through the air, of course becoming weaker and weaker as the distance from the transmitter is increased.

An ordinary telegraph key was used to interrupt or break up this energy into dots and dashes, or code signals. These signals were then picked up at a distance by another aerial and detected by means of a **coherer,** or device somewhat similar to the crystal detectors with which many of you are familiar.

The coherer consisted of a small tube of insulating material filled with small particles or filings of iron or magnetic material, which had a tendency to draw and cling together when current impulses were passed through them, thus increasing and decreasing the resistance of a local battery and headphone circuit in which they were connected.

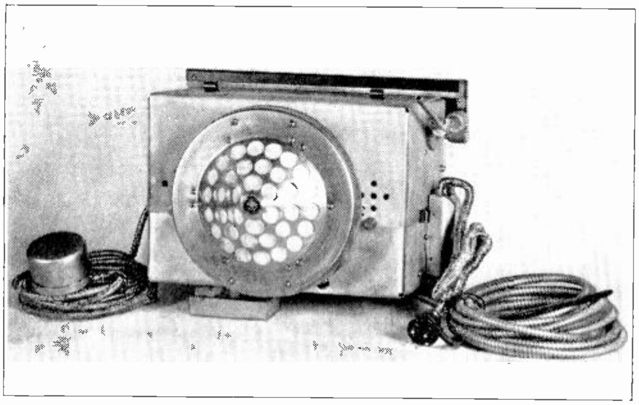

Fig. 3. Automobile radio with shielded conductors for preventing inductive interference from the car ignition system. Millions of automobiles will soon be equipped with radios of this or similar types. (Photo courtesy of American Bosch Magneto Corp.)

In this manner the very feeble signals picked up by the aerial and applied to the coherer caused its resistance to vary and produce a sort of valve action, which set up current impulses from the local battery through the headphones, thus making audible signals. Fig. 7 shows a sketch of an early device of this type.

In this figure small metal plates "C" and "CI" are used for the radiating and collecting system instead of using aerials and grounds. A simple set up of this type will actually send enough energy through a space of 5 to 50 feet to operate a bell by means of a sensitive relay. Signals can be heard in headphones a much greater distance.

With this type of wireless transmitting and receiving equipment signals could be successfully transmitted and received only a very short distance.

A little later the **crystal detector** came into use and, being much more sensitive to feeble electric impulses, made possible the detection of signals over distances of quite a few miles.

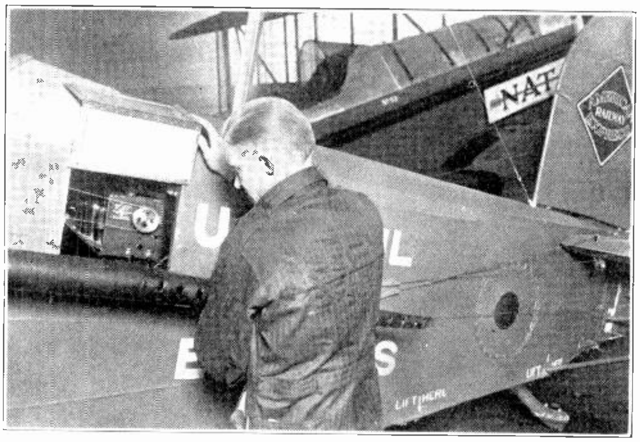

Fig. 4. This view shows a radio receiver installed in a mail plane, for use in receiving weather reports and instructions from ground stations. (Photo courtesy of National Air Transport Co.)

In the early part of this twentieth century came the invention of the **vacuum tube,** and its development and perfection made possible wireless telephony or voice transmission in addition to code signals. The vacuum tube also made possible broadcasting and reception of radio entertainment and education as we know it today.

It was not until about 1920 that this means of radio transmission and reception became popular for the purpose of entertainment, thus making a general demand for radio equipment in the homes throughout the country, and making much more efficient and popular the equipment used for sending commercial messages and radio telephone conversations.

2. WAVE FORM ENERGY

As radio signals are transmitted through space by energy in wave form, it is very important in beginning the study of radio to first obtain a general knowledge of wave form energy and how it is produced and transmitted.

Almost everyone has seen waves in water, set up by wind or by dropping some object into it. These waves represent traveling energy as can be observed from the way they will bob a small boat up and down, or even rock a large steamer. The small circular waves set up by dropping a stone in a pond, and which radiate outward in all directions from the source gradually dying out in the distance, are very illustrative of the nature of radio waves set up by a transmitting antenna.

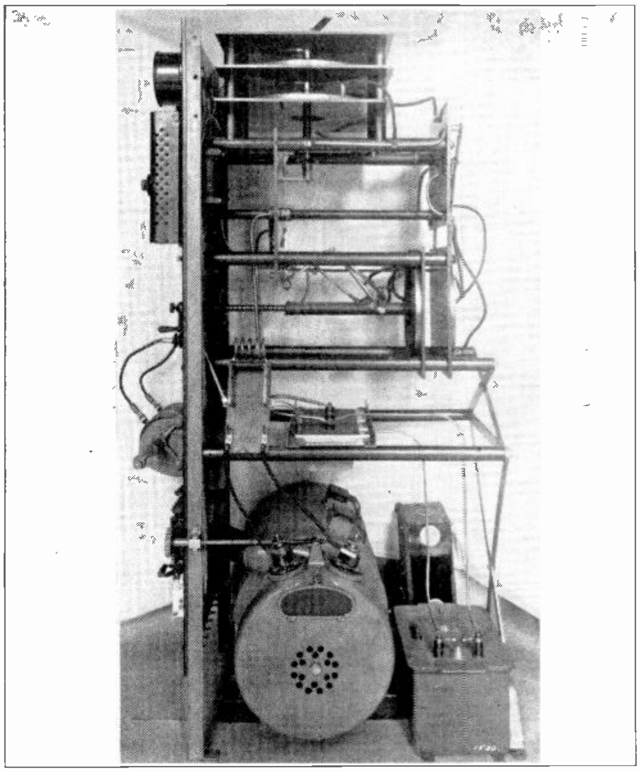
Fig. 5. Side view of a spark transmitter such as formerly used very extensively in ship radio installations. (Photo courtesy of Radiomarine Corp. of America.)

Let us next consider sound waves which although invisible are very common, and which you already know something about from explanations in an earlier section on telephones.

You will recall that sound is also energy in the form of air waves, and is created by anything that sets up vibration of the air. See Figures 108 and 109 in the Telephone Section.

Air waves or vibrations ranging between 16 and 15,000 per second create audible sounds, or sounds which can be heard by the average human ear. So all frequencies between 16 per second and 15,000 per second are called **Audio Frequencies.**

A very interesting and important fact to note about sound waves is the manner in which certain objects will vibrate in tune with them if their natural rate of vibration happens to be the same as the frequency of the sound waves.

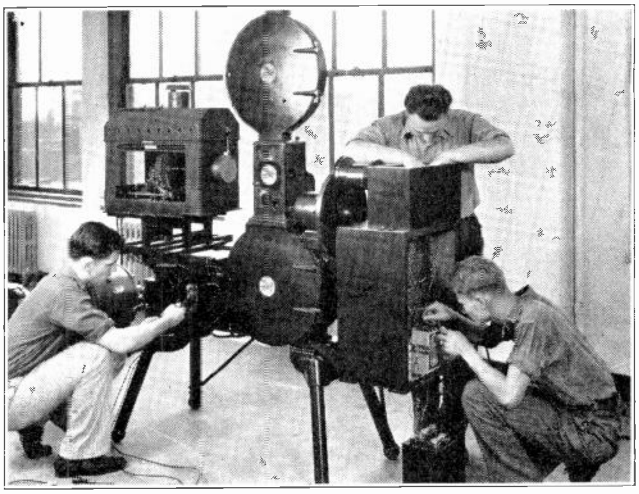
Fig. 6. Film scanning machine of a television transmitter. This machine makes possible the transmission of a talking picture which can be received in the home with radio and television receivers.

This can be readily demonstrated with a pair of tuning forks of the same pitch. Striking one fork will set up audible vibrations of the other one some distance away, by the energy radiated through the air.

This same thing is often noticed in connection with the strings of a piano or some other instrument, or even a tin pan, vibrating very noticeably when sounds of the proper pitch or frequency strike them. This principle of tuning is somewhat similar to the action of radio energy between the transmitting and receiving equipment.

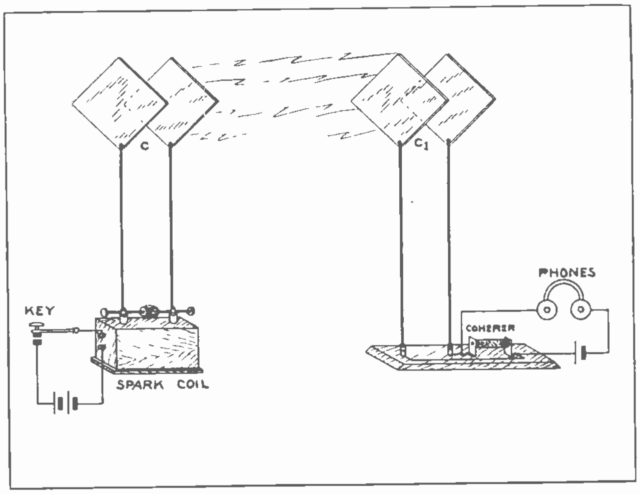

Fig. 7. Diagram of an elementary type radio transmitter. The spark coil on the left radiates from its antenna plates, energy that is received by the coherer and phones on the right.

Now if sound consists of air waves or vibrations, and will travel through the air, it is easy to see that air must be a conductor of sound.

Sound travels through air at a speed of about 1100 feet per second. Water will also conduct sound and various solids will carry sound more or less according to their nature.

At the rate sound travels through air we can readily see that it would be impractical for long distance communication, because of the time it would take the sound to travel any great distance.

The time required for a sound echo to return from a distant hill or building well illustrates this. You have probably also noticed the fact that thunder is often heard considerably later than the distant flash of lightning is seen, due to the fact that the sound travels so much slower than light.

3. RADIO ENERGY OR WAVES. NATURE AND SPEED

Radio energy instead of being in the form of air waves is supposed to consist of electro-magnetic and electro-static waves set up around conductors by the high frequency currents flowing in them. These radio waves are thrown off into space in all directions, and for great distances if the electrical energy used is sufficient. See Fig. 8 which roughly illustrates radio waves traveling from a transmitter antenna in all directions to be picked up by various receiver antennas.

Radio waves travel through all substances and all space, even where no air is present. So we find that air, which is the conductor of sound waves, is not the carrier of radio energy.

Radio waves are said to be set up in the **ether**, which exists in all space and materials.

Radio waves cannot be insulated by any known material, although they can be shielded or lead around certain spaces with metal shields. Large steel buildings often shield their interiors and certain spaces near them in this manner. Natural mineral deposits and hills often produce shielding effects on radio energy also.

Radio waves travel at a speed many thousands of times faster than sound waves—186,000 miles per second, or 300,000,000 meters per second, which is the same as the speed of light and electricity.

At this rate a radio signal will travel about 7 times around the earth in one second, or from New York to San Francisco in a time period so short it is usually not worth considering.

4. FREQUENCY AND WAVE LENGTH

Radio waves are much higher in frequency than sound or audio frequency waves. Frequencies above 16,000 cycles per second and up to many millions of cycles per second are known as **Radio Frequencies.** Above this range are the various light frequencies.

The radio waves used in ordinary broadcast work range from about 500,000 to 1,500,000 cycles per second.

Fig. 9 shows a comparison of the frequency of sound and radio waves, the upper curve representing a simple sound wave of 5,000 cycles per second, which is quite high frequency in the sound range; and the lower curve representing a constant radio wave of 100,000 cycles frequency, which is in the lower range of radio frequencies.

Radio waves are set up around transmitting antennas by passing through the antenna wires alternating current such as you are already familiar with, except of much higher frequency.

In addition to referring to radio waves by their frequency, they are also classified according to **wave length.**

The length of each wave produced by a cycle of the radio frequency current can be accurately measured or calculated.

Radio wave lengths are expressed in meters, and one meter is equal to 39.37 inches. The length of one wave can be measured either from the crest of one wave to the crest of the next of the same polarity as at A in Fig. 9, or from the start to the finish of a wave as at B in this same figure.

When the frequency of radio energy is known, the wave length can be easily calculated by dividing the distance in meters which the waves travel in one second, by the frequency or number of waves per second.

For each cycle of current applied to the transmitting aerial there will be one complete wave radiated from it.

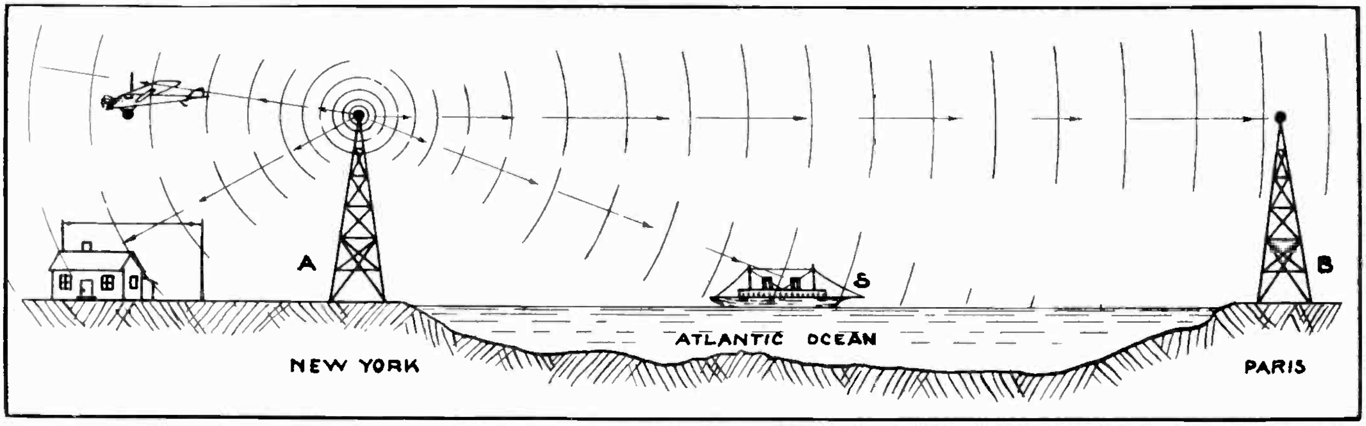

Fig. 8. Diagram illustrating the manner in which radio waves are thrown off in all directions from a transmitting antenna. These waves can be received by a number of different aerials at various distances from the transmitter as shown in the sketch.

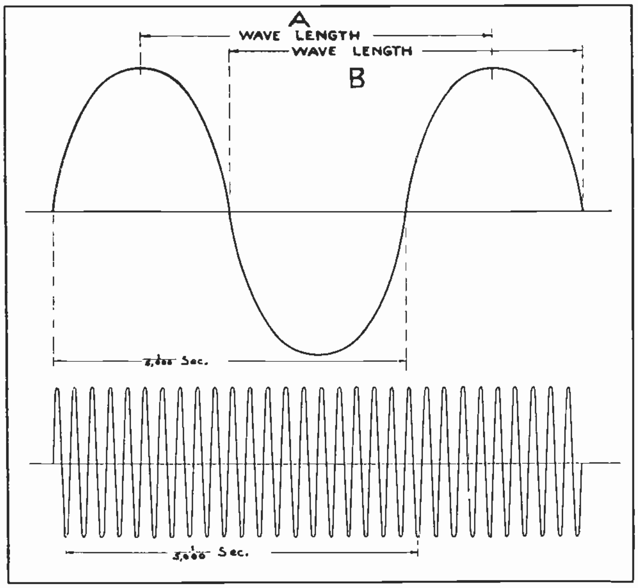

Fig. 9. The above two sets of curves roughly illustrate the difference between the frequency of sound waves and that of radio waves. The contrast between ordinary 60 cycle alternating current and the radio waves would be still greater.

Therefore

$$\text{Wave length in meters} = \frac{300{,}000{,}000}{f}$$

in which

300,000,000 = speed of wave travel in meters per second, f = frequency of current in cycles per second.

For example a station transmitting at a frequency of 1,000,000 cycles will have a wave length of

$$\frac{300{,}000{,}000}{1{,}000{,}000} \text{ or 300 meters.}$$

Checking the ordinary broadcast frequencies of 500,000 to 1,500,000 cycles in this manner will show that they cover a wave band of 200 to 600 meters.

This formula can also be transposed and used to find the frequency of a station when the wave length is known, as follows:

$$f = \frac{300{,}000{,}000}{\text{wave length in meters}}$$

For example if a certain station is using a wave length of 400 meters, the frequency will be

$$f = \frac{300{,}000{,}000}{400}, \text{ or 750,000 cycles or 750 kilo-cycles.}$$

One kilo-cycle being 1,000 cycles.

5. SOURCES OF HIGH FREQUENCY ENERGY

We have mentioned that radio waves are set up at the transmitter aerial by the flow of high frequency current in the aerial circuit.

You are already familiar with the nature of alternating current from your study in your shop course and in earlier sections of this reference set. You will recall that alternating voltage is generated by A. C. generators or alternators, at the common frequency of 60 cycles per second for power and lighting purposes. Also that this alternating voltage causes current to flow back and forth through the circuits, setting up a constantly changing and reversing magnetic field around the conductors.

Keep these simple facts well in mind as you study radio and remember that the currents used in radio transmission are simply alternating currents of much higher frequency.

While low frequency current in conductors sets up changing magnetic flux around them, and this flux will induce energy in other conductors or coils even several feet away, high frequency currents seem to throw off or radiate their magnetic and static energy much more efficiently, and much farther into the atmosphere.

Radio signals sent out with only a few kilowatts of this high frequency energy are often received on the opposite side of the earth.

Ordinary A. C. generators can not be used to produce radio frequency currents, because they cannot be practically designed with enough poles, or operated at high enough speeds to generate the very high frequencies required.

Radio frequency currents can be produced by means of **Special Oscillating Circuits** in spark or arc transmitters, by special design **Inductor Type Alternators,** or by **oscillating circuits using power vacuum tubes.** The last method is the one used in most modern code transmitters and in all broadcast stations.

6. SPARK TRANSMITTER PRINCIPLES

Spark transmitters are becoming obsolete because of their low efficiency and poor tuning characteristics, but the principles of the oscillating circuit used in these transmitters are both very interesting and valuable in getting an understanding of radio energy and circuits.

Fig. 10 shows the parts and circuits of a simple spark transmitter, and the method of producing high frequency radio energy with this equipment is as follows:

Ordinary low voltage, low frequency A. C. is supplied from a light or power circuit to the primary winding of the power transformer "A", which steps the voltage up to 15,000 volts or more. As this secondary voltage rises up toward maximum value during each alternation it charges the high voltage condenser "C" storing electrical energy in it. Let us assume the polarity to be as shown by the arrows and positive and negative signs for the alternation we are considering.

A quenched spark gap "S.G." consisting of a number of metal plates to form several small gaps in series, is connected in series with the condenser and the inductance coil "L", to complete a closed oscillating circuit.

If this spark gap is properly adjusted, when the voltage from the transformer secondary rises about to its maximum for an alternation, the gap will

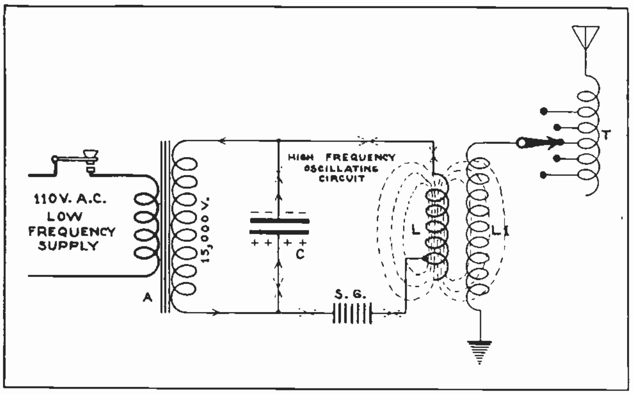

Fig. 10. Diagram of a simple spark transmitter showing the low frequency, oscillating, and antenna circuits.

break down or discharge. As soon as an arc or spark is formed at the gap its resistance is greatly reduced, allowing the condenser to discharge its energy with a rush, through the coil L and around to the negative side of the condenser.

During the condenser discharge the heavy current flowing through coil L builds up a strong magnetic field around it. When the condenser is discharged and its current dies out this flux collapses and induces a voltage in coil L that tends to keep the current flowing in the same direction, thus charging the condenser again with polarity opposite to what it was on the first charge.

As soon as the flux around coil L collapses and its induced voltage dies, and before the spark can completely die out at the gap the condenser discharges right back again in the opposite direction, and once more charges up from the magnetic energy stored in the coil during discharge.

This action continues at very high frequency, the current surging back and forth from several to a few dozen times for each primary charge the condenser is given at the peak of each low frequency alternation from the secondary of the power transformer.

Of course each succeeding oscillation is lower in voltage and power, due to the resistance losses in the closed oscillating circuit and in the spark gap, so with a certain adjustment the series of high frequency oscillations will just about die out by the time the condenser receives its next charge from the low frequency current.

The frequency of the oscillations set up in such a circuit depend principally on the inductance of coil L and the capacity of condenser C, and to some extent upon the resistance of the circuit. An increase of either the inductance or capacity reduces the frequency and increases the wave length.

The high frequency energy produced by such a spark transmitter is called **"Damped"** energy due to the "dying out" or **attenuation** of each series of oscillations.

Fig. 11-A shows a curve representing one train of oscillations produced in this manner. Fig. 11-B shows a curve of the oscillations set up by a circuit in which a quenched gap is used and so adjusted as to quench out or stop the spark sooner, without allowing the condenser to discharge down to such a low voltage.

If a key is used in the primary circuit of the transformer to make and break the circuit and thus cut up the current flow into dots and dashes, the oscillating circuit will produce short and long series of wave trains, as shown in Fig. 11-C.

As the flux around coil L in Fig. 10, builds up and collapses for each oscillation of current it of course cuts across the secondary L1 in the antenna circuit and induces voltage in this coil which causes current to flow in the antenna circuit and set up radio signals.

The adjustable coil T is the antenna tuning inductance for changing the wave length of the transmitter. This will be more fully explained later.

7. INDUCTION TYPE ALTERNATORS

The form of damped wave energy produced by a spark transmitter gives a rather broad or harsh sounding note to the signals received, because of the variations in value or **amplitude** of the oscillations in each wave train or group.

Special high frequency alternators of the inductor type previously mentioned, produce high frequency current of constant value as shown by the curve at "A" in Fig. 12.

Because this constant value energy is generated continuously by such an alternator when in operation, it is commonly called **continuous wave** or C. W. energy.

Continuous wave energy when used for radio telegraphy produces a much purer and clearer signal note than does the irregular or varying amplitude energy of a spark transmitter, and the C. W. is much sharper in its tuning.

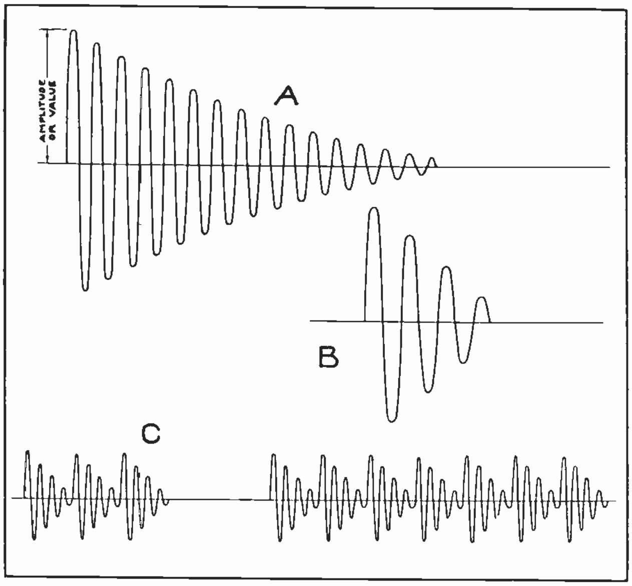

Fig. 11. Curves illustrating the nature of damped wave signals from a spark transmitter. Note how the oscillations die out at the end of each wave train.

The inductor type alternator is often called an Alexanderson alternator after the name of its inventor.

These machines can be made to produce alternating current with radio frequencies as high as 100,000 cycles per second. These waves are of course too high in frequency to produce an audible note or signal themselves, but if a rotary interrupter or "chopper" is used to break the high frequency circuit from 500 to 1,000 times per second, a clear musical note or signal will be produced. Fig. 12 "B" shows a curve representing the high frequency wave interrupted at audio frequency by the chopper.

If a key is then used to make and break the high frequency supply from the generator, these audio frequency groups of waves can then be sent out in the form of dots and dashes, as illustrated by the smaller curves at "C" in Fig. 12.

Another method of making the high frequency waves audible, without the use of a chopper, is to use a regenerative receiver which generates oscillations of its own, and which is tuned to heterodyne with the received waves and thus set up an audible beat note.

High frequency alternators are not used as a source of radio energy in modern radio stations on account of their high cost and difficulty of operation, but their principles are very interesting and valuable to know in connection with other radio equipment.

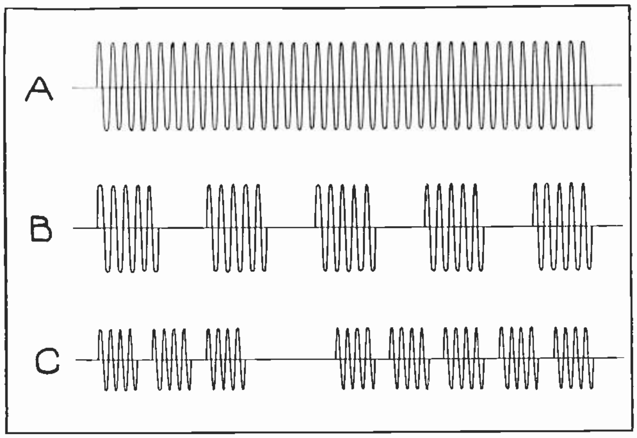

Fig. 12. Curves illustrating the nature of continuous wave (C W) and intermittent continuous wave (I C W) radio signals.

8. CONSTRUCTION AND OPERATING PRINCIPLES

Fig. 13 is a diagram showing the circuits and principles of one of these machines. The core "C" has two windings, one the field winding F, which is excited by D. C. and sets up a strong magnetic flux through the core and between the pole pieces P and P1; and the armature windings A and A1 in which the high frequency current is induced by increasing and decreasing the flux through the core.

A high speed rotor wheel or disk "R" carries a row of iron plugs or projections around its outer edge, and as the wheel rotates these iron plugs passing rapidly between the pole pieces cause the flux in the core to vary. When a piece of iron is between the pole pieces the magnetic reluctance of the core circuit is lower and the flux set up by coil F is much greater. When the iron piece passes out from between the poles the air gap is much greater and the flux is materially reduced.

This rapid change in the magnetic flux causes its lines to cut across the armature coils A and A1 and induce very high frequency A. C. voltage in them.

For example in one machine of this type the rotor carries 300 teeth or projections and revolves at 20,000 R. P. M., thus producing 300 × 20,000 or 6,000,000 cycles per minute; or 6,000,000 ÷ 60 = 100,000 cycles per second.

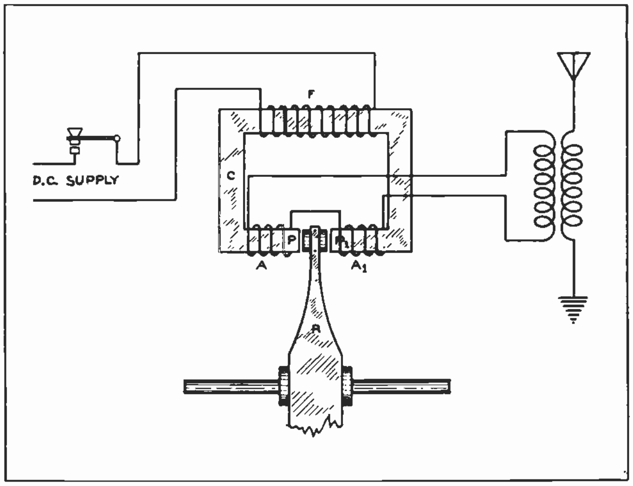

Fig. 13. Diagram illustrating the principles of a high frequency alternator for producing radio frequency energy in earlier types of transmitters.

The same results can be produced in these machines by using a steel disk rotor with slots or holes cut in is edge, to form teeth or sections of magnetic material alternating with non-magnetic spaces or sections. This construction is better than using the plugs or projections because it has less air friction or resistance at high speeds. The openings are generally filled in with brass or other non-magnetic material to make a smooth surface and further reduce air resistance.

The larger machines of this type have regular round stator frames in which both the armature and field coils are located, and as the rotor teeth pass by the coil slots the field flux is varied, thus inducing voltage in the stationary armature coils.

By making and breaking the field circuit and interrupting the excitation for a generator of this type, the high frequency output of the armature coils can be cut up into signals for radio telegraph messages. Or the C. W. output can be modulated by a telephone transmitter and voice, and this energy used for radio telephone transmission.

9. VACUUM TUBE OSCILLATORS

By far the most common method of producing pure continuous wave, high frequency energy for modern radio transmitters is by means of a vacuum tube used as an oscillator, or rather as a valve in a circuit in which it sets up oscillations.

Vacuum tube oscillator systems for radio transmitters are much more economical and efficient than the other sources of high frequency so far mentioned. They can be adjusted to produce almost any desired frequency, and they produce a pure continuous wave that is quite ideal for either radio telephone or telegraph use, and which can be very sharply tuned, thus minimizing interference and making it possible to cover great distances with comparatively small amounts of energy.

Vacuum tube oscillators use high voltage direct current from D. C. generators, rectifiers, or batteries, and convert it into high frequency A. C.

To understand how this is accomplished one must first observe the construction and operating principle of the tube itself. As vacuum tubes are not only used for oscillators but are also the heart of most all modern radio equipment, you should study very carefully the following general explanation of this device as an oscillator, and also the more detailed material which is given later on tubes for other uses.

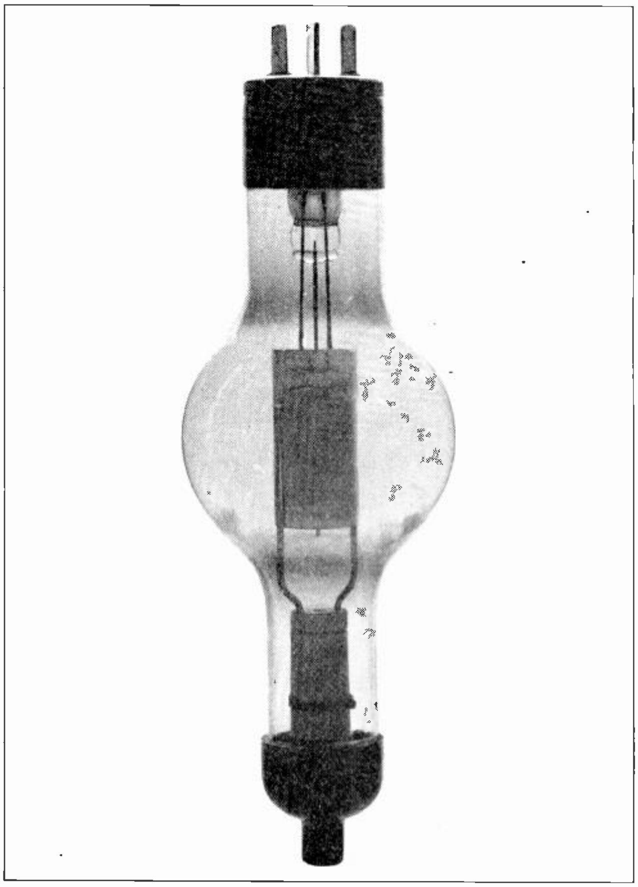

Fig. 14. Photo of a large vacuum tube such as commonly used in radio transmitters.

Almost everyone has seen ordinary vacuum tubes such as used in radio receivers, and knows that they consist of an evacuated glass bulb containing several internal parts or elements sealed inside, and provided with terminals or connecting prongs to the outside of the insulating base.

Many of these small tubes can be used as oscillators, but for radio transmitters larger tubes are generally used, as they will handle more power. Fig. 14 shows one type of power tube used in radio transmitters.

In the common three element tubes the internal parts or elements are the **Filament, Grid,** and **Plate.**

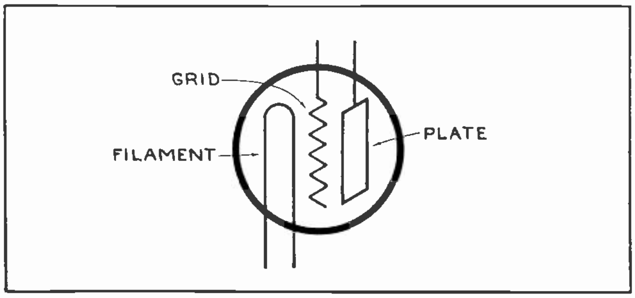

Fig. 15 Sketch of the symbol commonly used for representing a three element vacuum tube in radio diagrams.

Fig. 15 shows the common symbol used for representing a tube in circuit diagrams. On the left is the **filament** or electron emitting element, in the center is the **grid** or control element which acts as a shutter to regulate the flow of electrons, and on the right is the **plate** or anode which is supplied with voltage from a D. C. source. In Fig. 14 the metal plate can be seen in the center of the bulb with its terminal brought out of the metal cap or tip on the bottom of the tube. The plate is in the form of a slightly flattened or oval cylinder and the grid and filament are inside it. Their leads are brought out at the top of this tube.

We do not need to go into much detail in regard to the construction or characteristics of vacuum tubes at this point, to enable us to understand their use as oscillators or producers of radio frequency energy.

10. OPERATION

Fig. 16 shows a tube connected in a simple circuit with the necessary devices for setting up high frequency oscillations. By referring frequently to this sketch it will be easy for you to understand the following explanation of the action of the tube as a valve, and its function as an oscillator.

When the filament is heated by current from the low voltage battery "A", it throws off or emits **negative electrons** by the millions. These little electrons are strongly attracted by the plate which is charged positively by its connection to the positive terminal of the high voltage battery "B". This stream of electrons from the filament to the plate actually constitutes a flow of current according to the electron theory. But considering the more

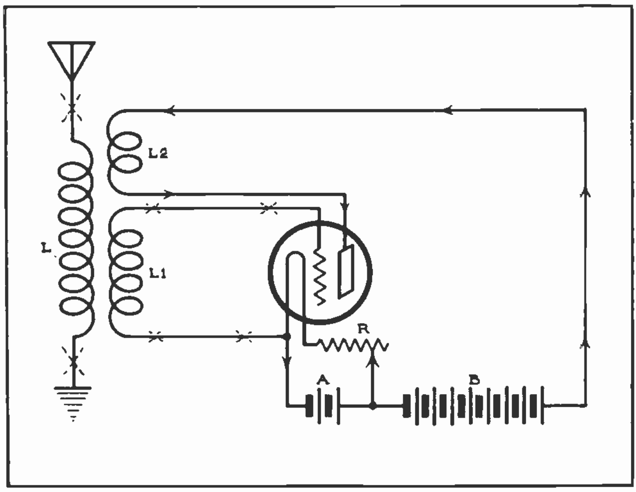

Fig. 16. Diagram of a simple vacuum tube oscillator circuit for producing radio frequency energy. Study this sketch carefully while reading the accompanying explanation.

common understanding of current flow, in a direction from the positive terminal of the battery or source, through the wires and back to the negative terminal, let us simply say that the electron stream completes the circuit by bridging the gap between the plate and filament.

Current then flows as shown by the solid arrows, from the "B" battery through the plate coil L2, to the plate, through the electron stream from plate to filament, and then back to the negative of the "B" battery.

As long as the filament is heated and emitting electrons some plate current will flow from the "B" battery, and **this current will vary directly with any change in the number of electrons passing between filament and plate,** the current increasing as the electrons are increased and decreasing as they are decreased. As long as there is no change of voltage on the grid the number of electrons does not change and this plate current remains at a certain normal value.

When the filament circuit is first closed and as the filament heats up and starts to emit electrons, the plate current starts to build up. As this current through coil L2 increases, the magnetic field set up by this coil expands and cuts across the grid coil L1, inducing a voltage in it.

If this grid coil is properly connected so that the lead attached to the grid becomes positive at this instant, this positive voltage applied to the grid causes it to attract more electrons from the filament, and thus increases the plate current to considerably more than normal. This current can only increase to a certain amount because of the limited amount of electrons which can be emitted by the filament.

When the plate current stops increasing the flux around coil L2 stops expanding and stops inducing voltage in the grid coil L1. This allows the grid potential to fall back to normal, so the grid attracts less electrons and allows the plate current to decrease.

As soon as the plate current starts to decrease the flux around coil L2 starts to collapse and cuts across coil L1 in the opposite direction to what it did at first. This induces voltage of opposite direction and charges the grid with negative polarity. So we see that alternating current is set up in the grid circuit as shown by the small dotted crosses.

As the grid becomes negative, it repels the negative electrons from the filament and decreases the number that reach the plate, thereby reducing the plate current still further.

The plate current of course cannot fall below zero value so when it finally stops decreasing the flux around coil L2 stops collapsing, and stops inducing voltage in the grid coil to make the grid negative, and this allows the grid to return to normal or zero potential.

As the grid becomes less negatively charged, the electrons from filament to plate once more start to increase and the plate current starts to build up again as previously explained.

This reversing action or cycle keeps on repeating, and as the pulsating current in coil L2 causes its flux to expand and collapse across L1, it induces alternating current in the grid circuit as shown by the small dotted crosses. It also does the same to the antenna coil L, thus setting up high frequency alternating current in the antenna circuit, as shown by the large dotted crosses.

The frequency of these oscillations depends on the inductance of the coils as this inductance determines the length of time required for the current and flux to build up to full value in each direction. As these coils usually consist of only a few turns and have no iron cores their inductance is low enough to allow very rapid oscillations, or frequencies, ranging up to millions of cycles per second in some cases.

A variable condenser can be connected across either the grid coil L1, or plate coil L2, and also used to vary the frequency of the oscillations as desired.

11. ARC TRANSMITTERS

Direct current arcs are also used to produce radio frequency energy in certain types of commercial transmitters.

Arc transmitters are supplied with direct current from a D. C. generator or rotary converter, and this current is used to maintain an arc between two electrodes, one of which is carbon and one copper.

These electrodes are mounted inside a chamber in which an atmosphere of hydrogen is maintained by vaporizing and decomposing alcohol which is allowed to drip into the heated chamber.

In some arc transmitters a powerful electromagnet or blow out coil is located near the electrodes to keep repeatedly and rapidly "blowing out" the arc. See Fig. 17-A.

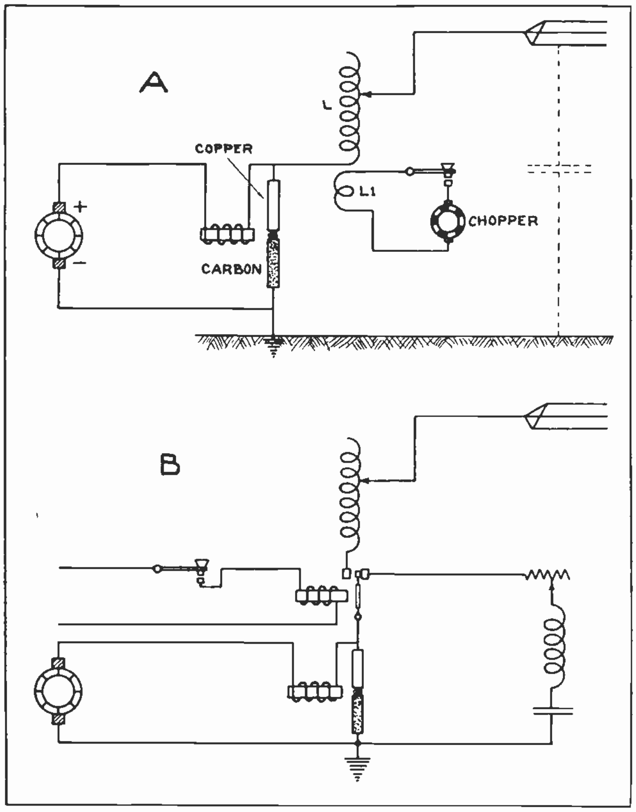

Fig. 17. Two simple sketches of arc type radio transmitters, using different methods of controlling the antenna current for code signalling.

As long as an arc of this type is operating in a circuit with inductance and capacity, it sets up continuous high frequency oscillations in the antenna circuit. This is due to an interchange of energy between the inductance and condenser varying the voltage at the arc, and the action is somewhat similar to that in spark transmitter circuits, except that with arcs the energy is undamped, or C. W.

In Fig. 17 the condenser effect is obtained from the capacity between the aerial and ground as shown by the dotted lines. This effect will be more fully explained later.

The antenna tuning coil L, serves both as an inductance to store magnetic energy for interchange with the condenser and thus set up oscillations, and also to adjust the frequency and wave length of the transmitter.

The high frequency waves emitted by an arc transmitter would not be audible at the receiver unless varied at audio frequency in some manner, or heterodyned by a regenerative receiver.

To provide an audible note a chopper is often used as shown in Fig. 17-A, to vary the frequency of the antenna current at regular audio frequency intervals. When the key is closed it allows the chopper to rapidly and repeatedly short circuit the little coil L1. Each time this coil is shorted, current is induced in it from the flux of coil L, and the reaction between the fields of these two coils then slightly changes the inductance of the antenna circuit and thus changes the frequency of the emitted wave.

Another method sometimes used is to leave the antenna circuit open normally, and only close it by means of a key or relay just during the signal intervals, as shown in Fig. 17-B.

During the periods the key is not closed and the antenna circuit is open, the oscillations from the arc are maintained through a shunt circuit consisting of a variable resistance, an inductance and a condenser, which are connected in series with each other and then across the arc as shown in Fig. 17-B.

12. SIGNALLING AND MODULATION

Now that we have learned the various methods of setting up radio frequency current or oscillations in various transmitters, let us find out how the signals are impressed on these high frequency **Carrier Waves,** and conveyed by them in leaving the transmitter.

We have already learned that the high frequency carrier wave necessary for radio transmission is not audible to the human ear, except in the case of spark transmitters where the damped wave trains have audio frequency variations in their amplitude. We have also learned that with C. W. or continuous wave radio energy, the carrier can be made audible for code signals by means of a chopper or by the beat note from a regenerative receiver.

Then for telegraph signals it is only necessary to send this signal energy out in proper code impulses or dots and dashes to form the various letters. This is done by means of a key placed in the circuit so that it will control the power to the antenna, either directly, or by means of a relay in the case of large transmitters.

In order to send voice or music however, it is necessary to impress the audio frequency sound waves on the radio frequency carrier waves, in such a manner that they will vary or control the volume or amplitude of the carrier wave directly with the volume and frequency variations of the sound. This is known as **Modulation** of the carrier wave, by the voice or music waves.

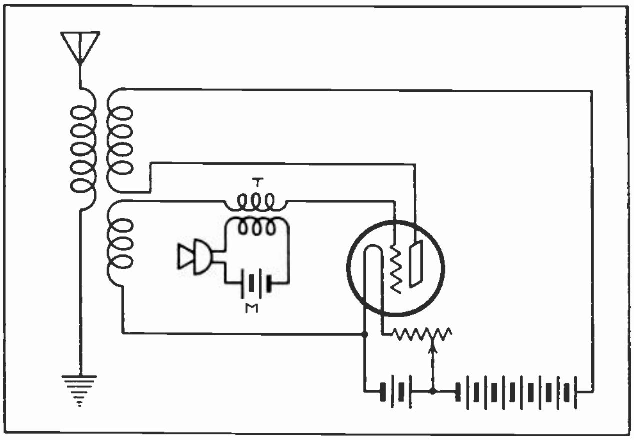

Fig. 18. Diagram showing how a telephone transmitter or microphone can be coupled to an oscillator circuit of a simple radio transmitter, to modulate the carrier wave with the audio frequency voice energy.

Modulation can be effected by coupling a telephone transmitter or microphone into the radio transmitter circuit so that it controls or varies the output of high frequency.

Fig. 18 shows a simple low power radio telephone transmitter circuit with one oscillator tube, and with a microphone coupled to the grid circuit by means of a **Microphone Coupling Transformer "T".**

The operation of a telephone transmitter or microphone has been explained thoroughly in this Reference Set, in an earlier section on telephones. It may be well for you to briefly review pages 2 to 5 of that section now.

You will recall that the microphone controls or varies the current from a battery, in impulses that correspond exactly in value and frequency to the sound waves striking the diaphragm

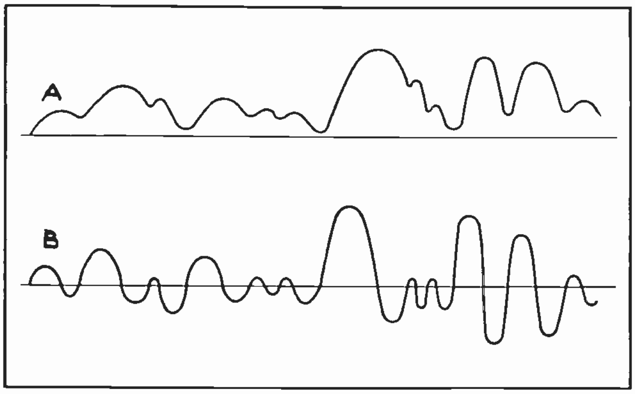

Fig. 19. The curve at A illustrates the nature of the pulsating current set up in the circuit of a microphone. At B is shown the curve for the alternating current of varying value which is induced in the secondary winding of a microphone coupling transformer.

In Fig. 18 you will note that the microphone is connected in series with a microphone battery "M", and the primary of the coupling transformer. Therefore, the pulsating current set up through this primary coil when voice or music waves strike the microphone diaphragm, induces alternating current of corresponding value and frequency in the secondary coil, which is connected in series with the grid circuit of the oscillator tube. Fig. 19-A and B show curves representing the pulsating D. C. of the microphone circuit, and the varying value A. C. which will be induced by them in the secondary of the coupling transformer. Now you will remember that any change in the grid voltage of a vacuum tube causes a corresponding change in the plate current. So as the microphone transformer supplies alternating voltage of varying value and frequency to the grid of this tube the plate current will vary accordingly. If the tube is already oscillating and delivering a radio frequency carrier current to the antenna, these audio frequency variations impressed on the radio frequency waves will cause them to vary in value: the variations being at audio frequency and corresponding to the original sound waves at the microphone. Fig. 20 shows a modulated carrier wave on which the value or amplitude of the high frequency waves has been varied by impressing the audio frequency energy upon it.

This modulated wave is what reaches the antenna and is sent out through space to reproduce voice and music at the distant receivers.

13. THE ANTENNA CIRCUIT

Now that we know the nature of the energy used in radio transmission and how it is produced, we will next want to know how this modulated wave or energy is radiated or thrown out into space from the transmitter.

You probably know of course that this is done with an **Aerial** or **Antenna,** but you may have wondered how current can flow in the antenna as it is not a complete metallic circuit.

When high frequency alternating voltage supplied by the transmitter is applied to the antenna circuit, either by direct connection or by induction to the antenna coil, current does actually flow due to the condenser or capacity effect between the antenna and ground. This current is measurable with special high frequency ammeters of the hot wire or other types. In large high power transmitting stations the antenna current may be over 100 amperes.

From explanations given of condensers in earlier sections you already know that a condenser consists of two or more conductors or conducting surfaces or plates, separated by insulation of some kind.

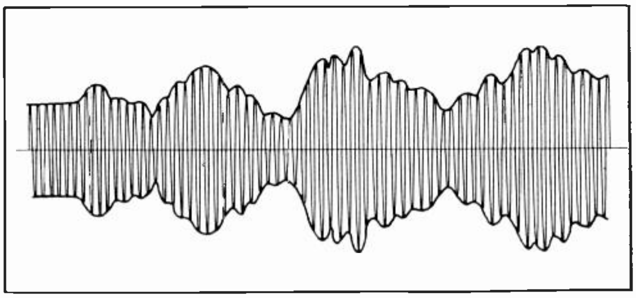

Fig. 20. Curve showing a high frequency carrier wave modulated or varied in value by the audio frequency voice waves.

Transmitting aerials for medium or long wave stations usually consist of one or more long wires, supported horizontally or parallel to the earth's surface. If several parallel wires are used, they are all connected together to form a network. These wires are attached to their supporting poles or towers by high voltage insulators, and are further insulated from the earth by the air between the aerial and the ground.

This construction forms a simple condenser as shown in Fig. 21. The dotted lines simply show that the aerial acts as one plate, the earth as the other, and the air as the dielectric of the condenser.

14. CURRENT FLOW IN ANTENNAS

You have already learned that when D. C. voltage is applied to a condenser it will charge the condenser with one plate or group of plates positive, and the other plate or group negative. We also

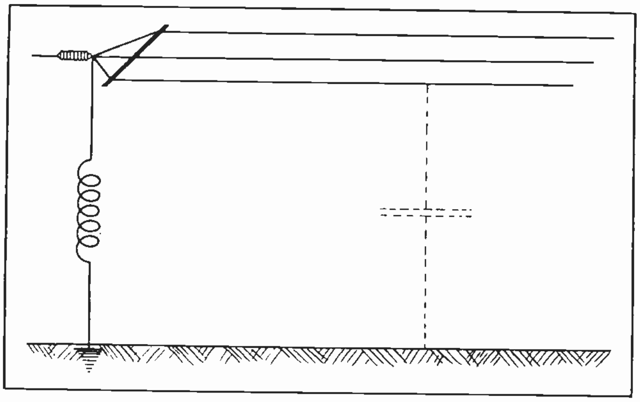

Fig. 21. Sketch showing the antenna circuit of a radio transmitter, completed by capacity to earth.

know that while the condenser is being charged current flows into it, even though it does not pass through the condenser dielectric.

Then when the applied voltage is removed and the condenser shorted or merely left connected in a closed circuit, it will discharge and cause current to flow out of it in the opposite direction to that of the charging current.

A condenser can be charged in either direction by simply reversing the polarity of the applied voltage.

We have also learned that if alternating voltage is applied to a condenser by connecting it in an A. C. circuit, alternating current will flow in the condenser leads as the condenser charges and discharges with the rise and fall of the applied voltage during each alternation. See Fig. 22. **The amount of charging current that will flow to a condenser depends directly upon the voltage and frequency of the A. C. energy** applied, as well as upon the size or capacity of the condenser.

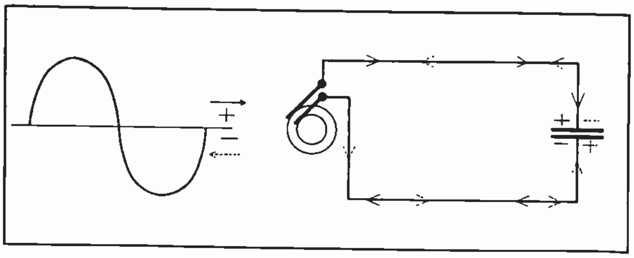

Fig. 22. On the left is shown a curve for one cycle of alternating current. On the right is shown the manner in which the alternations charge a condenser and set up current flow in its circuit.

As radio transmitters supply extremely high frequency to the antenna circuit, and usually at several thousand volts potential, considerable current will flow, even though the actual capacity between the aerial and ground may not be very great in micro-farads.

As the high voltage, high frequency current flows in the antenna of a transmitter each cycle sets up a complete electro magnetic wave, and also a complete electrostatic wave around the antenna.

These waves travel through space, earth and other objects with the speed of light, and when they strike or cut across a receiving aerial they induce very feeble voltages in it.

Transmitting aerials are not always horizontal, some being merely a vertical wire. There is sufficient capacity between a long vertical wire and the earth, however, to allow current to flow in such antenna circuits. Fig. 23 shows an illustration of electro-static waves leaving a vertical antenna. The magnetic waves are not shown in this sketch.

It is very important that transmitting antenna circuits, including their ground connections be of low resistance, in order to avoid resistance losses as much as possible. Due to the skin effect or tendency of high frequency currents to follow close to the outer surface of a conductor, rather large conductors are often used in transmitting antennas.

15. TUNING AND RESONANCE

We have already learned that a variable inductance or condenser can be used to change the frequency or oscillation period of a transmitter oscillating circuit.

The same is true of the antenna circuit and as the length of this circuit, including the antenna, lead in wire, and ground lead, determines the amount of inductance and capacity of the circuit, it should be made of the proper length for the wave length of the station.

In addition to making this circuit the proper length, variable inductance coils and variable condensers are used to tune the antenna circuit to the frequency of the energy produced by the transmitter.

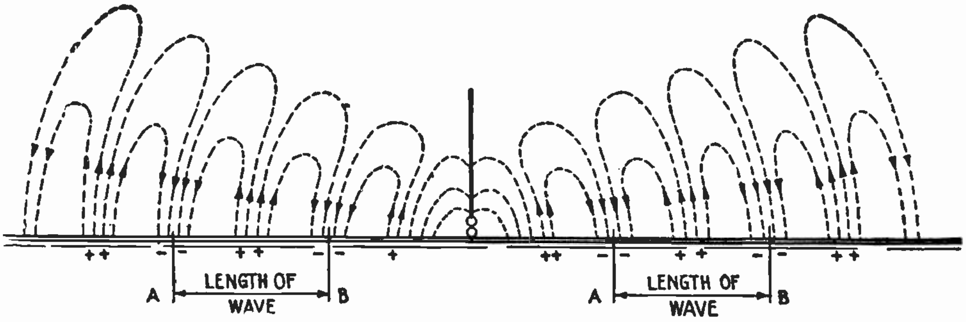

Fig. 23. This diagram shows the manner in which electro-static waves are assumed to radiate in all directions from a vertical radio transmitting aerial.

When the open antenna circuit is adjusted to the same natural frequency as that of the closed oscillating circuit of the transmitter, the two are said to be in **resonance** with each other.

Proper tuning of the antenna circuit enables maximum current to flow and produces best results and efficiency with a transmitter.

Tuning of radio transmitters has another very great advantage, in that it makes possible the sending of signals at one certain wave length, which can be received by receivers that are also tuned to that wave length, without interfering with other stations that are operating on different wave lengths. This makes possible the operation of many transmitting stations at the same time without confusion, and also makes possible the selection of the desired station by the receiver. More about tuning and tuning devices will be given later.

16. TYPES OF ANTENNAS

As already explained, a radio **Antenna** or aerial consists of one or more elevated wires, connected to the radio transmitter or receiver by means of a **lead-in wire**, running from the near end of the antenna to the equipment. And as previously mentioned, a ground lead and connection is practically always included as part of the antenna circuit.

Antennas are generally made of bare copper or bronze wires, as these have good conductivity, and the bronze wires also have good strength.

Insulated wires are often used for receiving antennas, as the insulation does not stop the passage of the radio waves which cut across the wire to induce energy in them.

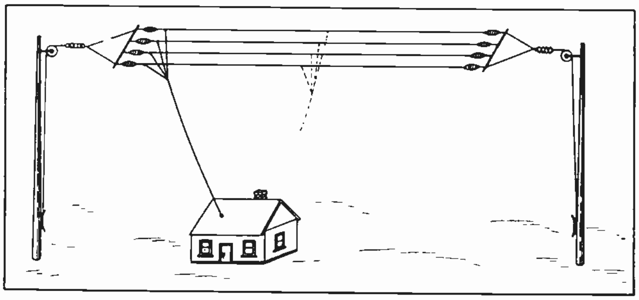

Fig. 24. The above sketch shows a flat top, L type antenna. The dotted lines show where the lead-in would be connected for a T type antenna.

All antennas and lead-in wires should however, be well insulated from their supports, from any adjacent objects, and from ground. This is particularly important with transmitting antennas which are often supplied with very high voltage, sometimes ranging as high as 5,000 to 10,000 volts in large high-powered broadcast or commercial land stations.

Glass, porcelain and composition insulators of suspension, pillar, and bushing types, are used for insulating antennas and lead-in wires.

There are several common types of antennas in use for radio transmission. Some of these are the **Vertical Wire** or **Hertz Antenna,** the **Flat Top Inverted "L" type, "T" type, Cage type, Fan type** and **Umbrella type.** Each of these types has certain advantages for various uses. The **Verticle Wire Antenna** is one of the simplest of all, and consists merely of a straight vertical wire suspended from some support or wire overhead and from which it is insulated, or in some cases supported on the side of a vertical wood pole or mast. Antennas of this type are mostly used in short wave transmission.

The **Flat Top Inverted L Antenna** is one of the most commonly used both on land and ship stations, because it is both efficient and convenient to install. Fig. 24 shows an antenna of this type, supported between two tall masts, above the transmitter building.

These antennas generally consist of from two to four parallel wires spaced about 2 to 3 feet apart, and attached by means of insulators to spreaders at each end. The spreaders are also often insulated again from the supporting cable used to draw the antenna up and hold it in place.

The ends of the parallel wires are all fastened together as shown and connected to the lead-in cable, which should be of the same carrying capacity or area as all of the antenna wires.

With the lead-in wire attached to the end of such an antenna, it is called an inverted L, from its shape or appearance. If the lead-in wire is attached to the center of the flat top section as shown by the dotted lines in Fig. 24, the antenna is then called a "T" type. Flat top antennas of this type are often fitted with tie ropes attached to the ends of the spreaders by means of insulators, and fastened down to the pole or tower, to help prevent the antenna from swaying in the wind. Very much swaying is objectionable as it tends to change the wave length of the antenna, as it moves nearer to or farther from the ground, thus changing its capacity.

Inverted L antennas are particularly convenient for use on ships, and are also commonly used on broadcast stations and commercial land stations.

These antennas are somewhat **directional,** that is, they transmit or receive over a greater range in a direction opposite to that in which their free ends point.

In some cases just one large cable is used as an inverted "L" type aerial with quite good results.

The T type antenna usually has a slightly lower wave length than an L type of the same dimensions, because the T type is in effect the same as two shorter antennas connected in parallel. Therefore, the capacity remains about the same but the inductance is somewhat less than that of L type antennas.

Fig. 25 shows a **Cage type** antenna which is sometimes used for transmitting stations. These antennas consist of a number of parallel wires held in the form of a tube or cage by hoop-like spacers of micarta or other insulating material. The wires are all brought together at one end of the horizontal cage, and then often continued down in the form of a much smaller cage for the lead-in.

Cage antennas are very simple to construct and are not so much effected by wind as flat top antennas are.

The top view in Fig. 26 shows a **Fan Type** antenna in which a number of wires are suspended from the horizontal wire between two masts or towers. The bottom ends of all these wires are brought together to the lead-in wire or cable. Antennas of this type are quite efficient and are used in certain localities.

The lower view in Fig. 26 shows an **Umbrella Type** antenna, consisting of a number of wires spread out like spokes of a wheel around one center mast. The tops of these wires are all connected together to the lead-in wire, and their top and bottom ends are insulated from the mast and earth. The lower insulators are generally located some distance up from the ground to give the antenna the proper effective height from earth. Antennas of this type are well adapted to military use and for other portable or temporary transmitters, as only one center pole is needed and it is held erect by the antenna wires themselves acting as guys.

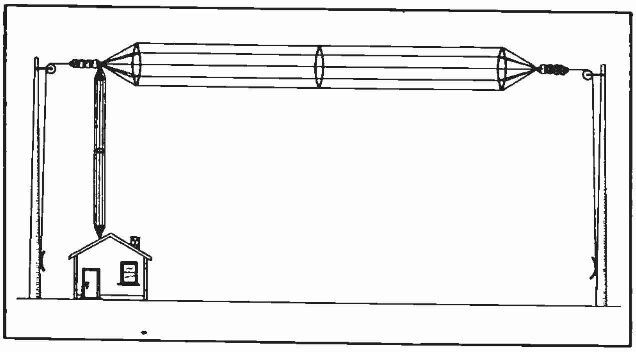

Fig. 25. This diagram shows the construction of a cage type antenna with a cage lead-in.

17. ANTENNA HEIGHT AND LENGTH

In general the greater the height of a transmitting antenna, the greater its radiating efficiency or range, and they should always be high enough to be well above any nearby trees, buildings, hills, etc., if possible.

It is not practical to build them too high, however, as their supports will then cost too much, and the capacity between the antenna and its supports becomes too great on the extremely high ones.

The length of an antenna depends upon the wave length of the energy it is to handle, and upon the conditions or location. The length should be chosen so that the antenna will have a natural or fundamental wave length as near as possible to that of the transmitted energy.

When it is not possible to use an antenna of the proper length it can be "loaded" with extra inductance in the form of a coil, to increase its natural wave length; or it may have a condenser connected in it to decrease the wave length.

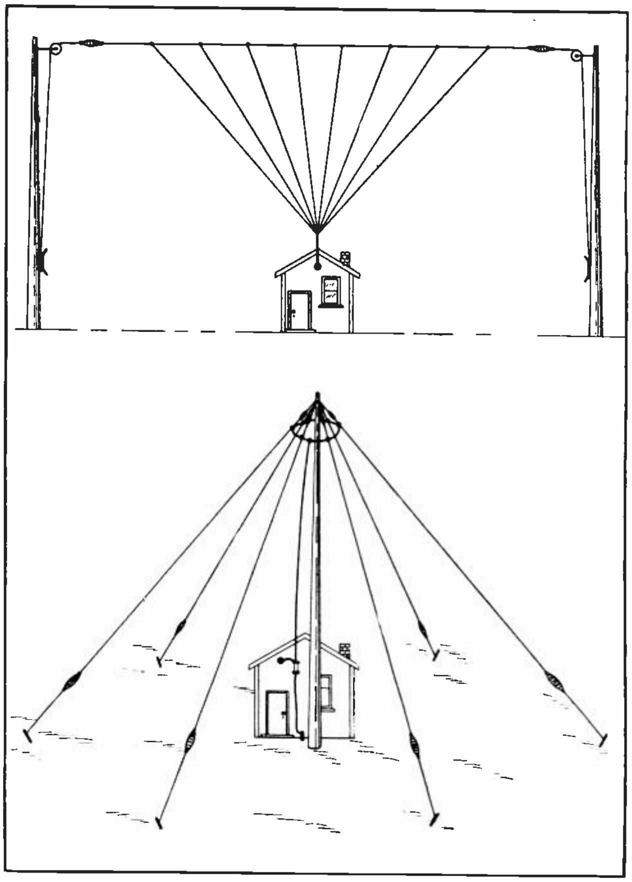

Fig. 26. The sketch at the top shows a fan type antenna and the lower sketch shows an antenna of the umbrella type.

The natural or fundamental wave length of an antenna can be calculated by means of the following formula, if the capacity and inductance are known

$4 \times V \times L \times C =$ wave length in meters

in which

$V =$ velocity of radio waves in meters per second

$L =$ Antenna inductance in Henry's

$C =$ " capacity in Farads.

A simpler method of calculating the approximate wave length is as follows: for a 4 wire flat top L antenna with, wires spaced about 2½ feet apart, multiply the entire length in feet, including the lead-in, by about 4.5. For "T" type antennas multiply the length of one end of the flat top and the lead-in by 5.

The height of an antenna also influences its wave length, both by changing its capacity to earth and by changing the length of the lead-in wire.

For example a 4 wire, inverted "L" type antenna with a flat top 50 feet long usually has a natural wave length of about 95 meters at 30 ft. height, 134 meters at 60 ft. height, and 186 meters at 100 ft. height.

The same type of antenna with a flat top 100 feet long has a wave length of about 159 meters for 30 ft. height, 200 meters for 60 ft. height, and 252 meters for 100 ft. height.

Flat top antennas of the "T" type have somewhat lower wave length for the same dimensions, as can be seen by comparing the following figures with those just given for "L" types.

A 4 wire "T" type antenna with a flat top 50 feet long has a wave length of about 70 meters for 30 ft. height, 117 meters for 60 ft. height, and 173 meters for 100 ft. height.

This "T" type antenna with a flat top 100 feet long has a wave length of about 106 meters for 30 ft. height, 154 meters for 60 ft. height, and 211 meters for 100 ft. height.

If the flat top is lengthened to 200 ft., its wave length will then be about 178 meters at 30 ft. height, 229 meters for 60 ft. height, and 291 meters for 100 ft. height.

Transmitting antennas range from 75 to 300 feet long for broadcast and ship work, up to over a mile in length for some of the very long wave commercial stations.

18. GROUNDS AND COUNTERPOISE

All connections in antenna circuits should be well made and soldered to keep the resistance as low as possible.

It is very important, particularly with transmitting aerials to have good low resistance ground connections, as the current flows through this connection to the earth side of the condenser the same as it does through the lead-in cable to the antenna side.

Good ground connections can be made by driving a long, perforated, galvanized pipe into the ground and pouring salt water into it, to soak through the holes into the soil; or by burying large copper plates or a network of copper wire. Sometimes a water piping system can be used for a ground.

Where it is difficult to obtain a good ground because of soil conditions, or for example in cases where a transmitter is located on top of a tall building, a special wire network known as a **Counterpoise** is often used beneath the regular antenna, and a few feet above ground or the roof. The ground lead is attached to this counterpoise which serves as the other plate of the aerial circuit condenser. Fig. 27 shows two methods of arranging counterpoise wires.

In some radio stations the same antenna is used both for transmitting and receiving, by using a change over switch to connect the lead-in wire either to the transmitter or receiver as desired. Generally, however, a separate antenna is used for receiving.

19. RECEIVING ANTENNAS

In homes and places where radio is only received and not transmitted, receiving antennas of much simpler construction than those just described, are used.

Receiving aerials do not need to handle much current and so generally consist of just one small wire about No. 12 or 14 B & S gauge, and of the proper length for desired results.

Either solid or stranded copper or bronze wire are very good for receiving antennas.

With early forms of radio receivers such as crystal sets, where all of the energy to operate the headphones came from the antenna, or even with sets using only one or two tubes, long, high receiving aerials were needed to pick up sufficient induced voltage to give good signals. But with modern multiple tube sets and the great amount of amplification they accomplish, very little receiving aerial is needed.

It is well to remember, however, that the higher a receiving aerial is located and the more free it is kept from surrounding trees, buildings, or other tall objects, the more energy it will usually receive. Also remember that increasing the length of a receiving antenna increases the energy it will pick up; of course keeping in mind that the antenna should not be so long that its natural wave length is much greater than that of the energy to be received.

In rural communities and certain out of the way places which are a long distance from any radio station, long, high, outdoor antennas may still be required or be an advantage.

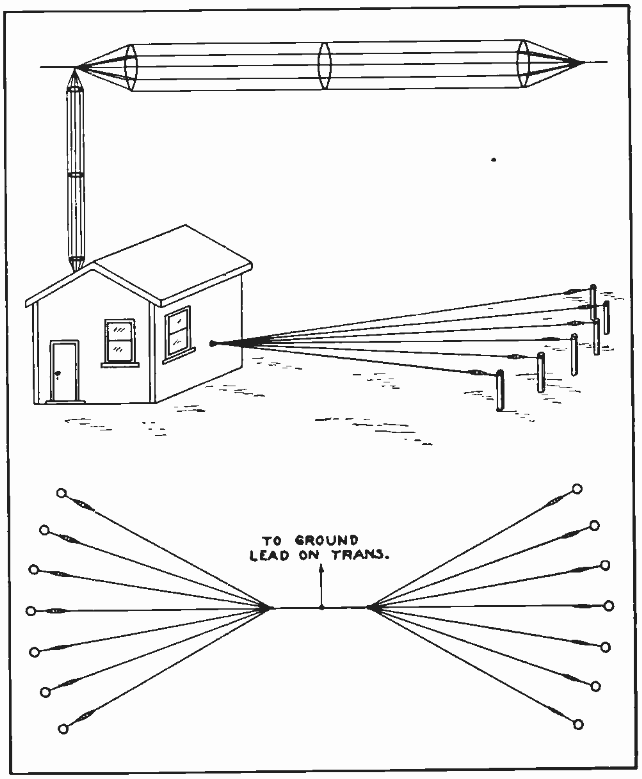

Fig. 27. The upper sketch shows the manner in which a group of wires forming a counterpoise can be used underneath an antenna to take the place of the ground connection. The lower sketch shows a counterpoise which can be used with a T type aerial.

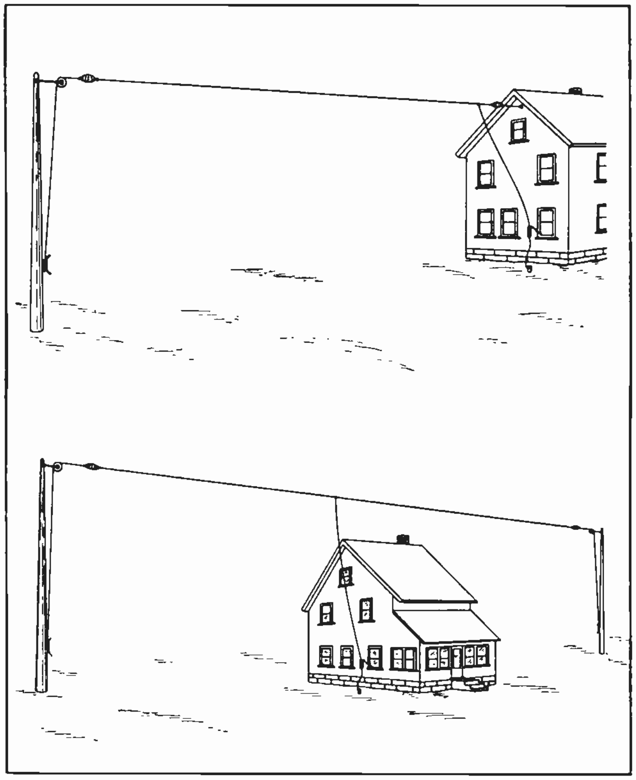

Fig. 28. The above sketches show L type and T type receiving antennas of single wire construction.

20. INSTALLATION OF RECEIVING ANTENNAS

Fig. 28 shows two methods of installing such aerials. The wire can often be stretched between two buildings or from a tall tree to a building and thus save the trouble of erecting masts or poles.

Antennas should not be drawn up tight enough to place excessive strain on the wires or fastenings, but they should be tight enough to prevent excessive swaying in the wind, as this varies their wave length and interferes with sharp tuning. Sometimes a coil spring at one end, or a weight on a rope over a pulley, can be used to keep an antenna tight when a mast or tree to which it is attached moves with the wind.

Remember that inverted "L" type aerials such as shown in the top sketch in Fig. 28, are quite directional and receive better from a direction opposite to that in which the free end points.

It is very important to have good low resistance soldered connections in a receiving antenna, because the received energy is so extremely small that there is not much to waste or lose. When we realize that the voltage induced by a radio signal in an ordinary receiving aerial may be less than 1 micro-volt, or $\frac{1}{1,000,000}$ volt, we can readily see the necessity of having good aerial and ground connections.

Joints or splices that are not soldered allow corrosion to creep in between the wires or parts, and in time build up a very high resistance film that may reduce the signal strength to less than $\frac{1}{10}$ its former value when the splice was new.

A good ground connection often makes it possible to dispense with a very long antenna or to avoid the trouble and cost of installing one in the first place.

In houses or buildings equipped with piping, the pipes usually make a very good ground for a receiver. A cold water pipe is generally best as they are almost sure to be well grounded, and to form a complete metallic circuit to ground. Some steam or gas pipes are equipped with insulating joints at certain places, which prevent them from being a good ground.

With powerful multi-tube receivers located near to broadcast stations, very often a short piece of insulated wire about 10 to 30 feet long, laid under the rug or along a moulding is all the antenna required, and some sets will operate fairly well with no antenna at all.

It is well to keep in mind that longer antennas than necessary will generally pick up a lot of unnecessary static and interference, and that shorter antennas are more selective and make it much easier to tune out local stations if one desires.

Generally an outdoor aerial 50 to 150 feet long is suitable for receiving distant stations even with medium cost sets, and an indoor aerial much shorter is best for receiving local stations, or even distant ones if the receiver is a good one of 5 tubes or more.

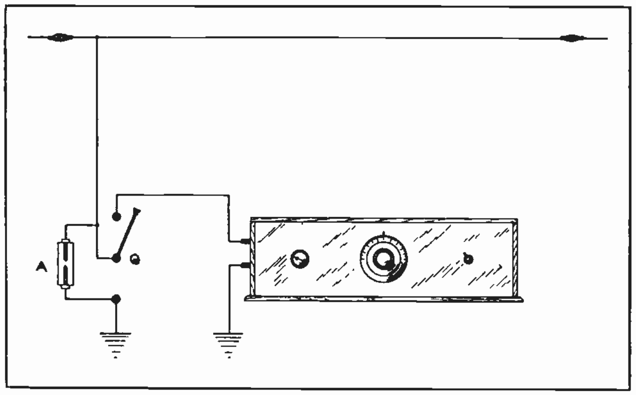

Fig. 29. This diagram shows the method of connecting a lightning arrester and a grounding switch to the lead-in of a radio receiver.

21. PROTECTION FROM LIGHTNING AND HIGH VOLTAGE LINES

All outdoor antennas should always be equipped with some form of lightning arrester, to ground any severe static charges and prevent them passing through the set and possibly damaging it or injuring operators.

On small receiving antennas these arresters usually consist of a simple needle gap arrangement connected between the lead-in wire and ground. On large, high transmitting antennas a more rugged arrester is required to safely handle the very high voltage atmospheric charges picked up, as well as possible direct lightning strokes.

A ground switch is also often used to connect the antenna direct to earth in case of electrical storms, or whenever the antenna is not in use. Fig. 29 shows a sketch of the connections for both a ground switch at G and a lightning arrester at A.

Antennas should never be erected over or directly beneath high voltage power lines, because of the danger of accidental contact in case either should break and fall across the other. Antennas that are near to power lines should be erected at right angles to them and **not parallel** to them, as this will help to prevent interference hum from induction of 60 cycle energy, and may also prevent induction of sufficient voltage to be dangerous, as might be possible with parallel wires.

22. LEAD-IN WIRES AND SPECIAL ANTENNAS

Antenna lead-in wires are often insulated, although they can just as well be bare if they do not touch parts of the building or if they are properly supported on pillar type insulators. Lead-ins should be well insulated where they enter the buildings, by means of good insulation on the wire or some form of insulating tube for receiving aerials; and by means of heavy glass, porcelain, or composition insulator bushings for transmitting aerials.

Lead-in wires should always be at least as large as the aerial wire, or with an area equal to all aerial wires in parallel where a number of wires are used. Remember that the length of lead-in wires should be added to that of the antenna proper, when calculating the effective length or natural wave length of the antenna. That is, with the exception of certain special types of transmitting aerials. Long ground leads will also affect the wave length of the antenna circuit.

Where a fairly long antenna is required and it is difficult or objectionable to erect an outdoor one, a long insulated wire, or a bare wire supported on insulators, can often be strung in an attic, keeping it as far as possible from any piping or electric wires.

Aerials located inside of steel frame buildings, buildings of steel reinforced masonry, or those using metal lath will generally not pick up much radio energy, as the steel work provides a definite shielding effect, and tends to ground or shunt the radio waves around the aerial.

Automobile radio receivers generally use a copper wire or screen located in the car top, or a metal plate under a running board for the antenna; and use the metal frame of the car for a ground. In this case we know the car frame is insulated from earth by the rubber tires, but its mass of metal serves as a sort of counterpoise or condenser type aerial even without any actual connection to earth.

Airplane transmitters and receivers generally use a trailing wire which can be reeled in, or a short wire or metal mast attached to the wings or fuselage for the antenna, and use the metal frame of the plane for the ground connection.

23. LOOP ANTENNAS

Loop antennas consisting of several rather large turns of wire are often used with portable radio equipment and in some home type receivers.

Loop aerials have a distinct advantage of being very directional, and are therefore a great help in receiving certain stations and keeping out interference from other powerful nearby stations, by simply turning the loop so that its edge or plane is in line with the station desired. Loops receive signals much better from either direction in line with their flat plane, than they do from stations located in a direction out from either side of the loop.

Loop aerials require no ground connections, as one end of the loop generally connects to the antenna terminal, and the other end to the ground terminal of the set.

Receivers designed for operation with a loop generally have it connected direct to the grid and filament terminals, thus eliminating the usual antenna coil and radio frequency transformer ahead of the first tube or stage.

The top sketch in Fig. 30 shows a loop connected in this manner to the first stage of a receiver, and the lower sketch shows how a receiver can be adapted for use either with a loop or with an antenna and ground, by means of a simple change-over switch "S".

With the switch in its present position on the upper contact the antenna coil or radio frequency transformer T is cut out, and the grid circuit is

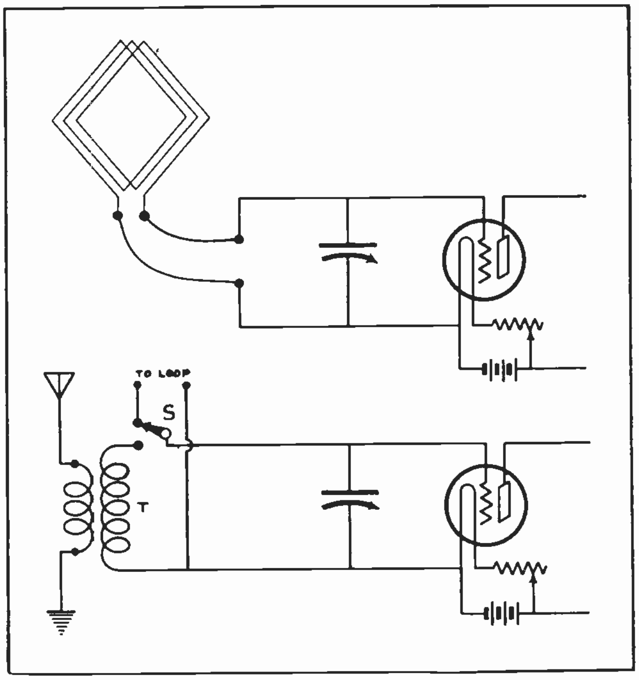

Fig. 30. The top sketch shows a loop aerial connected directly to the grid circuit of a vacuum-tube receiver. The lower sketch shows how a receiver can be adapted for use with either a loop or an aerial and ground.

connected to the loop terminals. With the switch moved to the lower contact the loop circuit is disconnected and the antenna coupling coil is connected to the grid of the tube.

The sharply directional characteristics of the loop aerial make it a very valuable device as a direction finder or interference locator. By rotating a loop while listening to a certain station or interference, the direction of the station or source of interference can be determined quite accurately by observing the position of the loop where the signal is loudest.

By use of specially constructed rotary loops with pointers and scales, observations can be made at various places around a transmitter or source of radio interference, and its location determined almost exactly by noting where the lines of direction of the different tests cross or focus.

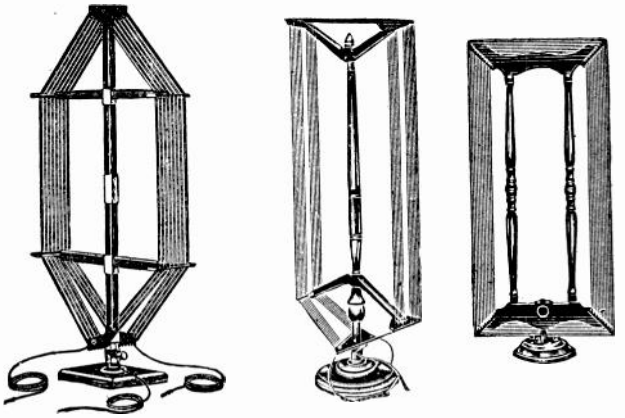

Fig. 30-A. Several different types of loop antennas for use with radio receivers. By rotating these loops directional reception can be accomplished.

The natural wave length of loop antennas depends upon the number of turns and the length of each turn, or size of the loop. It also depends somewhat upon the spacing of the turns. This spacing generally ranges from ½ to 1 inch between turns, although some loops for reception of very long wave lengths may have a number of slots ½ to 1 inch apart, with from 2 to 10 turns in each slot.

The wave length of a loop antenna can be increased by connecting a condenser across its terminals as shown in Fig. 30. By means of a variable condenser the wave length can be varied and the loop tuned to any wave length within its range.

A 4 foot loop with one turn can be used for wave lengths up to 180 meters with a .001 mfd. variable condenser in parallel, or up to 310 meters with a variable condenser of .003 mfd. capacity.

With 3 turns, a loop of this size can be used for wave lengths up to 400 or 675 meters according to which of the condensers is used, and with 6 turns its range is increased to 710 or 1200 meters according to the condenser used.

Many loops for indoor use are made about 2 ft. high, with from 6 to 20 turns, and used with a .00035 variable condenser.

24. RADIO RECEPTION AND TUNING

Now that we have a general understanding of how radio energy is produced and transmitted through space, let us see how this energy and the signals it conveys can be picked out of the atmosphere at will, and even to the extent of selecting just the signals we wish to receive.

You have already learned how the modulated high frequency waves of magnetic and static energy are radiated out through space by the transmitting antennas, and how receiving antennas are constructed to collect enough of this energy to operate receiving sets.

In an earlier section it was thoroughly explained how electro-magnetic waves or lines of force induce voltages in conductors when these lines cut across them, and if you will recall the principles of transformer action, you can readily understand how the waves radiated from a transmitting antenna induce feeble voltages in receiving antennas. Just think of the transmitting antenna as a sort of primary conductor which radiates its field great distances through space because of the nature of the high frequency energy it uses, and then think of the receiving antennas as secondary conductors in which secondary currents are induced.

Because of the great distance which usually separates the receiving and transmitting antennas the induced voltage in the receiving antenna will be extremely small or feeble. As previously mentioned this voltage is often less than one micro-volt, or $\frac{1}{1,000,000}$ of a volt.

Nevertheless this induced energy will be of exactly the same frequency as the energy at the transmitter from which the signal is coming, and it will also vary in value just exactly as the transmitted wave does when modulated by voice or audio frequency signal notes.

In this manner the energy flowing in a receiving antenna duplicates faithfully all of the conditions or characteristics of that at the transmitter, only on a much smaller scale. So now if we can make this received energy reproduce an audible sound, this sound will be a faithful reproduction of that used at the transmitter and impressed electrically on the carrier wave.

Before we consider the construction and operation of the receiver itself, however, it will be well to emphasize the fact that the very feeble amounts of energy received in radio work must be handled with extreme care, and by devices and circuits of very critical and exact design and connection, in order not to lose much of this small amount of energy, and to get the results desired from it.

While low resistance is very important, we have already learned that counter voltage of self induction and impedance in A. C. circuits, play a much greater part than resistance does in the control of alternating currents. This is particularly true when dealing with the extremely high frequency currents used in radio work.

For example, we find that receiving antennas and receiving set circuits must be **tuned** just right or have just the right amount of inductance and capacity in order to get any appreciable current of a certain radio frequency to flow in them.

This can perhaps be understood more easily if we recall the operation of the oscillating circuit used with a spark transmitter. In this circuit you will remember the frequency or rate of oscillation of the current was determined by the size of the condenser and the inductance coil, and the length of time required to charge the condenser, and the time required for the flux around the inductance coil to build up and collapse during each alteration.

If these factors can absolutely control the frequency of the energy generated in a transmitter oscillating circuit where very high voltages are applied, it is easy to see how they will also control the building up of high frequency currents in receiving circuits where the induced voltages are so very small.

If the capacity and inductance of a receiving antenna circuit are just right they will allow the induced voltage of a certain frequency to establish current which can oscillate freely in the circuit. If the capacity and inductance or the natural frequency of the circuit are not right for a certain frequency, current will not build up under feeble induced voltage of that frequency.

Of course this same circuit would allow current to build up at some other frequency for which its tuning happens to be just right, if some other station is sending waves of that frequency.

Another illustration of this tuning effect is in the vibration of a tuning fork to only those sound waves of its own natural frequency; or the response of certain reeds of a vibrating reed frequency indicator to the magnetic pull of alternating current of that same frequency. We also know that in order to keep a heavy pendulum swinging freely with the smallest possible pushes or impulses, these impulses must come at just the right time, according to the natural frequency or swing of the pendulum, so that they will aid the strokes of the pendulum.

This rather particular or "choosy" nature of radio frequency energy is a very valuable characteristic, as it is only through this feature that we are able to operate a large number of radio stations on different wave lengths at the same time, and yet select any one we wish to receive by simply tuning our receiver circuit by changing its inductance or capacity.

In other words it enables us to adjust a receiver so that a station of the desired frequency will be able to induce sufficient energy in the circuit to produce audible signals. Other stations of different frequencies may be able to induce a very little energy in the circuit also, but not enough to interfere with the desired signal, if the receiver is a good one and capable of sharp tuning.

This tuning of a receiving circuit is of course accomplished by changing either the amount of inductance or capacity, generally the latter.

Increasing either the inductance or capacity of a circuit increases its natural wave length. Decreasing the inductance or capacity will decrease the natural wave length of a circuit.

25. VARIABLE INDUCTANCE TUNERS

A method of tuning which was quite extensively used in earlier types of receivers, and is still used in transmitters and on some styles of receivers, consists of using a variable inductance such as shown at A in Fig. 31.

This form of variable inductance uses a **tapped coil "P"**, as the antenna coil or primary of the coupling transformer of the set. By shifting the rotating switch arm, turns can be cut in or out of the coil, thus increasing or decreasing the inductance and natural wave length.

Inductance coils of the smaller sizes for radio receivers are commonly wound in a single layer on a tube or cylinder of fibre or bakelite. Those with a large number of turns are often specially wound so that the turns are criss-crossed at a slight angle, in what is called honeycomb formation. This reduces the distributed capacity effect between turns. If the turns of large coils are all wound parallel and tight together, this capacity effect often becomes considerable at the very high frequencies carried by the coils. Some simple small coils of single layer winding have the turns spaced apart a short distance. Inductances for tuning vary from about 1 micro-henry $\left(\frac{1}{1,000,000}\right)$, to 125 millihenrys (.125 henry).

At B in Fig. 31 is illustrated another method of inductance tuning using a device known as the **Vario-Coupler,** consisting of a stationary coil S and a smaller coil M which is located inside or very near to the open end of the larger stationary coil.

When the turns of the movable coil are parallel to those of the stationary one, the induction or

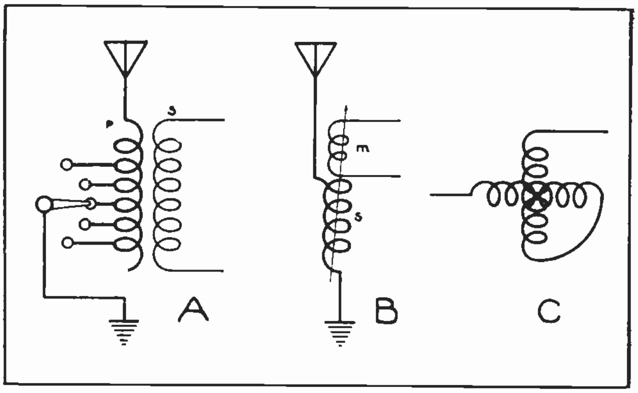

Fig. 31. The above three sketches show different methods of tuning radio circuits with variable inductances.

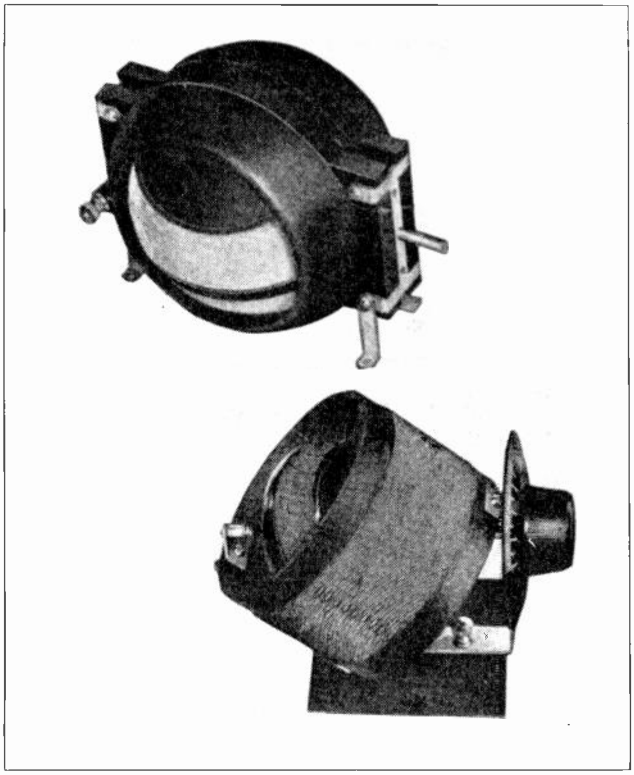

Fig. 31-D. Two types of variometers or variable inductances, such as formerly used very extensively in tuning radio receivers.

transfer of energy between them is maximum. When the movable coil is turned at right angles to the stationary one, the induction between them is almost zero. This rotation of the one coil not only varies the amount of energy it will absorb from the primary coil, but also changes the inductance of coil S by the reaction between its flux and that of the movable secondary coil.

Vario-couplers of this type provide a very smooth means of tuning a set because of the stepless change in inductance and coupling as the rotor coil is slowly turned.

Some such couplers also have taps on the primary coil for further changes in the inductance.

The slender arrow through the two coils indicates that they are coupled together inductively and variably. A number of different methods have been developed for varying the coupling between primary and secondary coils of this type, some of which are still in use in modern receivers.

Primary and secondary tuning coil units such as shown at A and B in Fig. 31 are really **Coupling Transformers** to inductively couple the antenna circuit to the rest of the receiver circuit, and are commonly called R. F. or radio frequency transformers.

One distinct advantage of being able to change the coupling between the primary and secondary coils of these transformers, is that moving them farther apart greatly increases the **selectivity** or sharpness of tuning of the set. Even though this separation of the coils loses some of the energy or volume, it makes it much easier to separate nearby stations when tuning.

When the coils are close together they are said to be **close coupled,** and this makes broader tuning. When the coils are widely separated, they are said to be **loose coupled,** and effect sharper tuning.

At C in Fig. 31 is shown still another method of varying inductance in a circuit, by using one coil which rotates within another slightly larger one, and connecting the two in series. This device is known as a **Variometer,** and is connected in series with the circuit to be tuned.

When the inner coil is in a certain parallel position inside the stationary one, its flux coincides with that of the stationary coil thus setting up a strong magnetic field around all the turns, and increasing the inductance of the unit. When the small coil is rotated 90 degrees to a position at right angles to the larger one, its flux neither aids or opposes that of the other coil very much, and the field is about normal around both, thereby reducing the inductance to a little less than it was at first. When the small coil is rotated 180 degrees to the exact opposite parallel position to what it was at first, its flux will oppose and largely neutralize that of

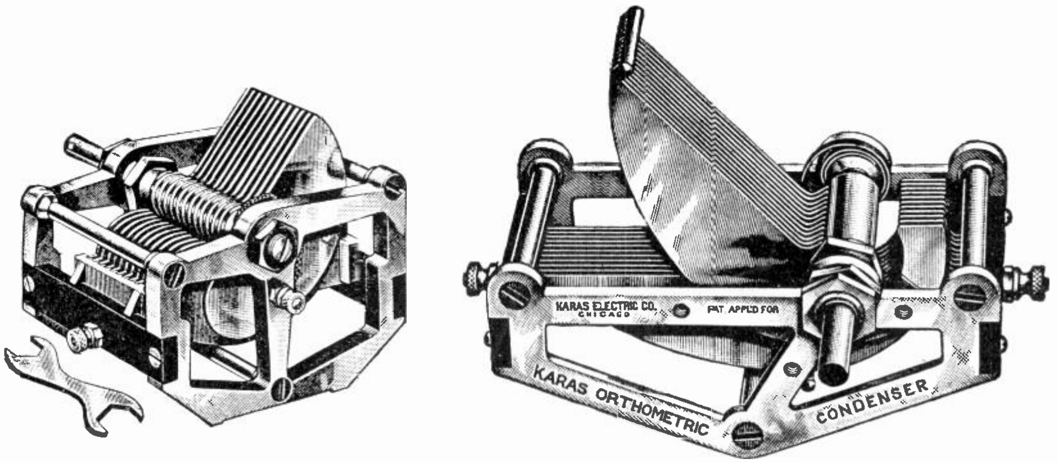

Fig. 32. Variable condensers, such as commonly used for tuning the circuits of radio receivers to the desired wave length. These condensers each have one set of stationary plates and one set of movable plates by which their capacity can be varied.

the stationary coil, thus weakening the total field around them both and greatly reducing the inductance of the unit.

Variometers of this type are not used as much in modern receivers as they formerly were. Fig. 31 shows two types of variometers such as were used extensively in earlier types of radio sets.

Some radio receivers use a set of changeable inductance coils known as **plug-in coils, or honeycomb coils** which can be conveniently interchanged for making definite changes of considerable amounts in wave length.

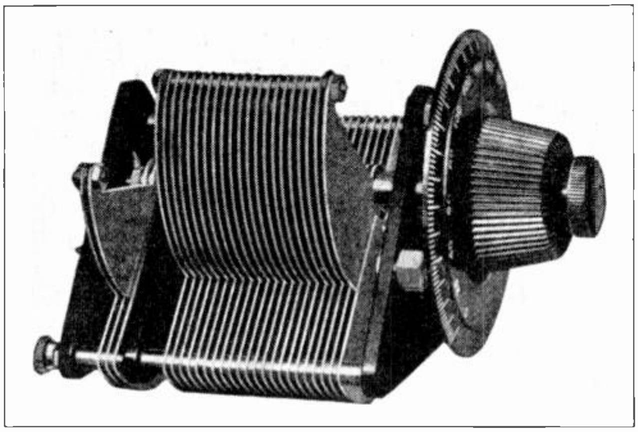

Fig. 33. Variable condenser, with vernier adjustment or small section operated by a separate knob on the tuning dial.

26. VARIABLE CONDENSERS FOR TUNING

Another very efficient and convenient device for tuning radio circuits is the variable condenser, two of which are shown in Fig. 32.

These condensers consist of a set of stationary plates and a set of rotary or movable plates, closely spaced and separated from each other only by air.

When the rotary plates are fully meshed between the stationary ones the capacity of the condenser is at its maximum, as the greatest possible area is active. When the rotary plates are entirely removed from between the stationary ones the condenser capacity is at its minimum, as only their edges are then exposed to each other.

By rotating the movable plates of such a condenser slowly, very fine and smooth changes can be made in the tuning of the circuits in which they are connected.

The plates are generally made of aluminum or brass, with the rotary ones mounted on a shaft and both sets mounted in a metal supporting frame, for convenient attachment to the panel or frame of a radio set.

The greater the number of plates used the greater the capacity and tuning variation or range, and the coarser the adjustment for a given movement. The less the number of plates the smaller is the capacity and the finer the adjustment for a given movement.

Some variable condensers are made with only three plates, two stationary and one rotary, for very fine adjustments. These are called **Vernier condensers.**

Convenient tuning knobs and graduated dials are generally attached to the shaft of the rotary elements. Some of these controls have a reducing gear or mechanism to enable slower movement and finer tuning with the condenser. Fig. 33 shows an earlier type of variable condenser which has the main element and also a smaller vernier element, and is equipped with the dial and knob.

Variable condensers are rated in micro-farads, a unit with which you are already familiar from an earlier section on A. C. They are sometimes rated by their maximum capacity such as .001 mfd., and sometimes by their range of capacity, as .000045 to .0005 mfd. Variable condensers are commonly made in sizes ranging from .000025 to .001 mfd. maximum capacities, one of the most common sizes being the standard .00035 mfd. condenser used in ordinary receivers. Condensers are also made with different plate spacings for high or low voltage circuits, and are used both in radio transmitters and receivers. Fig. 34 shows three common methods of connecting variable condensers for tuning radio circuits. The first two shown at A and B are often used in transmitters but are seldom used in modern receivers. The method shown at C being most generally used in modern receivers.

With the condenser connected as at A, in series with the antenna capacity, the total capacity and the wave length of the circuit are reduced; as you will recall from your previous study of condensers that connecting them in series reduces the voltage across each and thereby reduces their effective capacity.

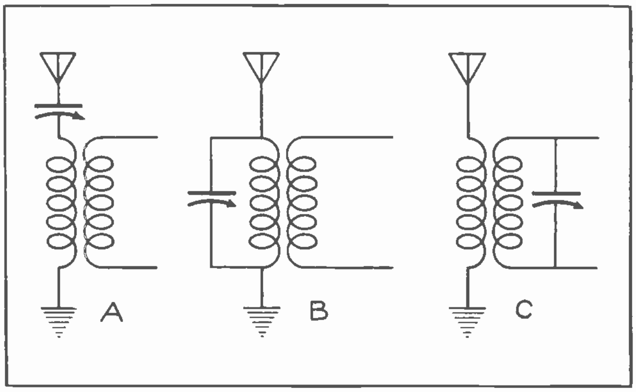

Fig. 34. Sketches showing three different methods of connecting variable condensers for tuning radio circuits.

When the condenser is connected in parallel with the inductance as shown at B, it increases the total capacity and thereby increases the wave length of the circuit.

When the condenser is connected across the secondary of the radio frequency transformer or tuner as shown at C, it tunes the secondary directly and also tunes the primary or antenna circuit indirectly, by inductive coupling between the coils. This method provides one of the smoothest and best methods of tuning and is therefore extensively used in radio receivers.

(NOTE)—Remember that adding inductance or capacity increases the wave length of a circuit. Connecting a condenser in series with the antenna or with a coil reduces the capacity and wave length of the circuit, and connecting the condenser in parallel with a coil increases the capacity and wave length.

27. RADIO RECEIVERS AND DETECTORS

While the tuning elements are absolutely essential to a radio receiver, the detector or device which makes it possible to hear or see the signals received, is often considered to be the heart of a receiver.

We have mentioned both hearing and seeing the signals because in addition to hearing code signals, voice and music with headphones or loud speaker, some commercial radio receivers print the code marks or symbols directly on a paper tape or ribbon as they come in. Television devices also convert the received energy directly into visual pictures or material, and transmission of still pictures or photos by radio is another process in which the energy received is converted directly into visible form.

As previously explained the transmitted radio energy or carrier wave is much too high in frequency to be audible to the human ear. Even after modulation by audio frequency currents the signal energy or current induced in the receiving aerial circuit, is alternating current of such high frequency that the diaphragms of the headphones cannot respond to it, because even their slight inertia prevents them from vibrating at such high speed.

We find, however, that if we convert this high frequency alternating current into pulsating D. C. with the same variations in value as the modulated A. C. has, then the phone diaphragms can respond, as the pull set up on them by the pulsating D. C. through their magnet coils is all in one direction, and simply varying in strength.

This is the job or function of the detector, **to rectify the received high frequency current into pulsating D. C.** There are two common devices used for this purpose, namely, the crystal detector and the vacuum tube. The coherer mentioned earlier in this section was one of the earliest devices used as a detector, but is entirely absolete now.

Crystal detectors were very extensively used for a number of years and were a great improvement over coherers. Crystals have certain disadvantages such as a lack of any appreciable amplifying ability and a need for frequent adjustment, so during the past few years they have been almost entirely replaced by vacuum tube detectors.

Crystals are still used along with tubes, however, in a few special types of sets, in certain experimental equipment, and are also carried as emergency equipment in certain stations, so we will very briefly cover their use and principles at this point.

Before we explain the function of crystals, however, it will be well for you to carefully observe and become generally familiar with the list of commonly used symbols shown in Fig. 36. These symbols will be used in the following diagrams of radio equipment, and are the standard ones used in representing various radio devices and parts in all ordinary diagrams and blueprints in magazines and text books, and those furnished by manufacturers on their equipment.

So in order to be able to easily trace and read these diagrams and thereby understand the equipment they represent, you should learn to recognize each of these symbols and know what it means.

28. CRYSTAL DETECTORS

As previously mentioned, the function of a radio detector is to rectify the high frequency alternating current received.

There are a number of crystals which have more or less of this property when current is passed through them. One of the most commonly used is the Galena crystal, which is a natural crystal formation of sulphide of lead, and is found in lead mines. Zincite, bornite, and silicon crystals are also used in some cases. Carborundum crystals are also used in circuits with a low voltage battery.

Fig. 37 shows a photo of a piece of galena crystal in a mounting or holder, and Fig. 38 shows a sketch of a mounted crystal at A, and at B a complete crystal mounting with its feeler contact or adjustable cat-whisker, which is used to explore the surface of the crystal for sensitive spots.

When a crystal such as galena is connected in an A. C. circuit, it will allow current to pass through it quite freely in one direction, and will almost entirely prevent its flow in the opposite direction. This is illustrated by the relative size of the current arrows on the wires leading to the crystal at A in Fig. 38.

This rectifier action is thought to be due to either electro-chemical or electro-thermal action between the layers within the crystal structure, or at the point of contact between the tip of the cat-whisker wire and the crystal surface.

29. ACTION OF CRYSTAL DETECTOR IN A RECEIVER CIRCUIT

Fig. 39 shows a method of connecting a crystal and a pair of headphones to a tuning coil to form a simple radio detector or receiver.

When the high frequency waves of a damped wave signal for example, strike against the receiving antenna of such a circuit, they induce alternating voltages in the antenna. This voltage tends to set up in the tuning coil, during each wave train, an alternating current such as illustrated by the curve at A in Fig. 40.

The voltage drop across the coil L in Fig. 39 will cause part of the current to flow through the crystal and headphones.

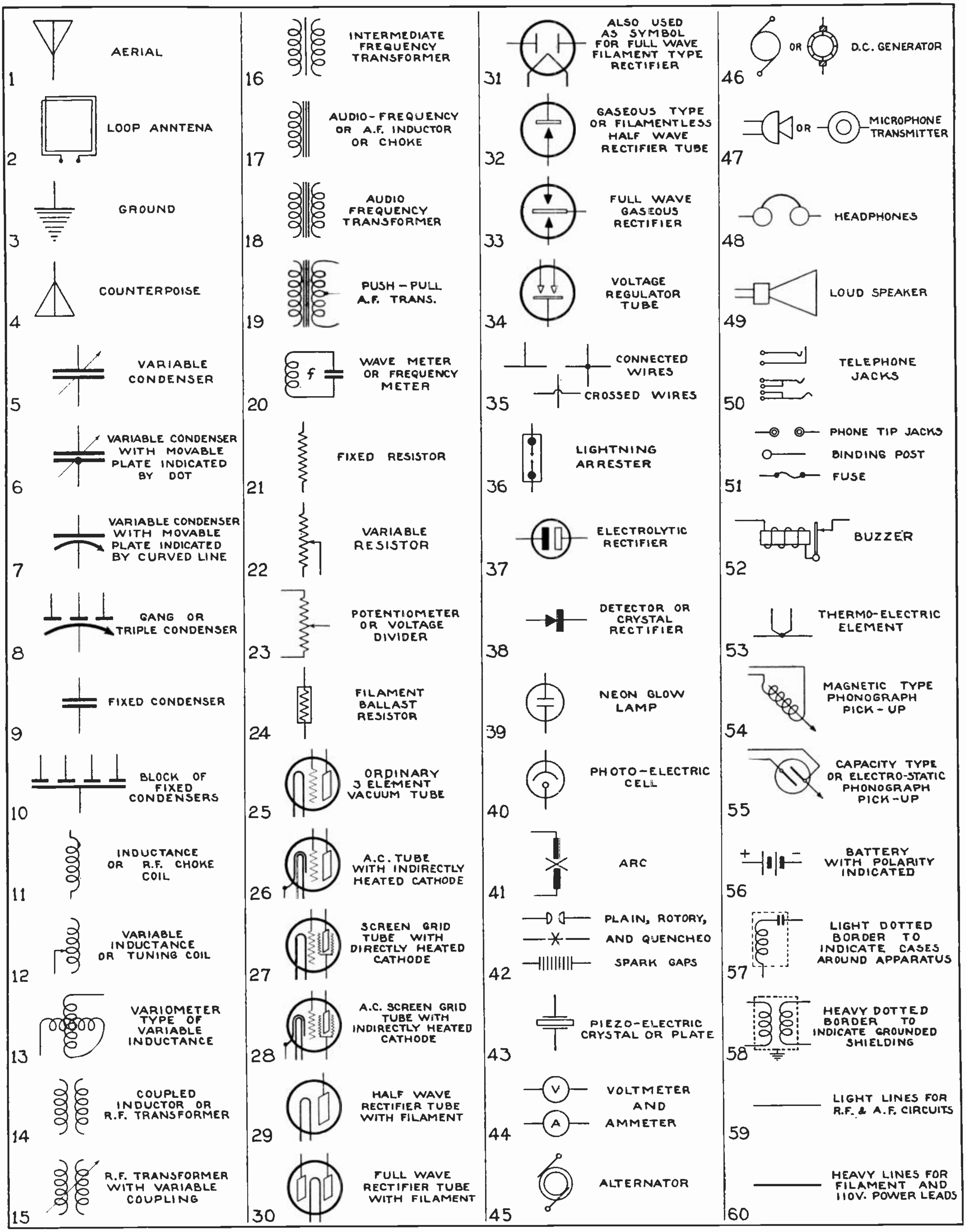

Fig. 36. This chart shows the most commonly used symbols for representing radio devices and parts in circuit diagrams. Examine each symbol carefully so that you can recognize any of them in radio diagrams from now on.

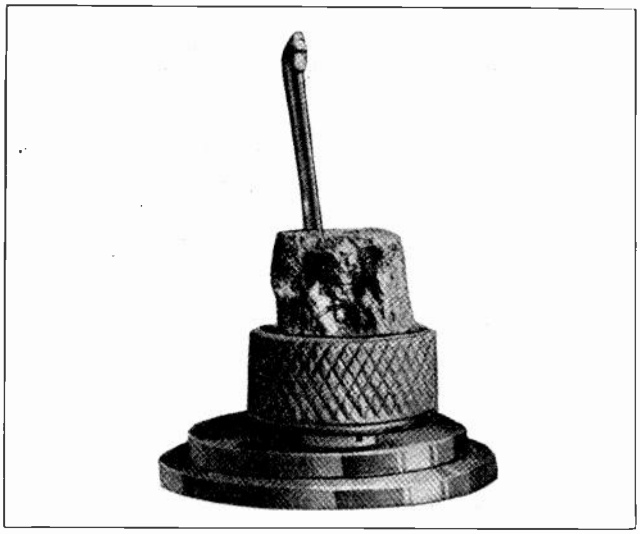

Fig. 37. Photo of a detector crystal fastened in its mounting. Such crystals as this were formerly used very extensively in radio receivers.

If the crystal were left out the high frequency current would not produce any sound at the phones, because it could not flow to any appreciable extent through the high impedance of the phone coils which are wound on iron cores. Even if the current did get through the coils in any useful amount the phone diaphragms could not vibrate at such high frequency, nor could the human ear hear it if they did.

With the crystal in the circuit as shown in Fig. 39, however, the current is allowed to flow through it and the phones in only one direction, and is practically all cut off in the reverse direction. This is illustrated by the curves at B in Fig. 40.

Thus practically all that gets through the phones is pulsating D. C. or current in one direction. The current through the phones does not vary with, or follow, each of the high frequency pulsations of these rectified groups, but due to the impedance of the phone coils the current builds up to a sort of average value, in the form of one pulsation for each group or wave train, as illustrated by the large dotted curves at C in Fig. 40.

These longer and slower current impulses through the phone magnets, all in one direction, cause the diaphragms to be attracted and released or vibrated at audio frequency, thus setting up audible signals.

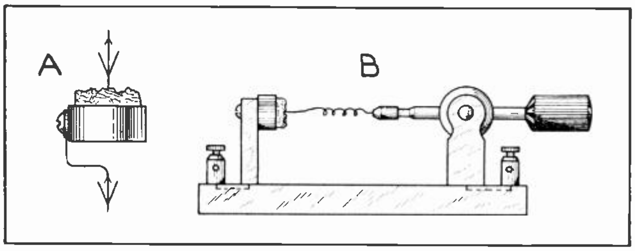

Fig. 38. The sketch at A shows a crystal and illustrates the rectifier effect on the current passing through it. At B is shown a complete crystal mounting with the crystal and cat whisker in place.

The same general action takes place with modulated C. W. energy of voice or music reception. The crystal rectifies the energy to high frequency pulsating D. C. by cutting of the flow in one direction. Then the impedance of the phones causes the unidirectional voltage pulsations to build up current through the phone magnets, which does not vary much with each high frequency impulse, but varies or pulsates with the slower variations in value which are due to the audio frequency modulation of the waves, as was shown at C in Fig. 40.

So we find that detection, or the change from radio frequency energy to audio frequency, takes place as a result of **the combined rectifying action of the crystal and the choking action of the phones.**

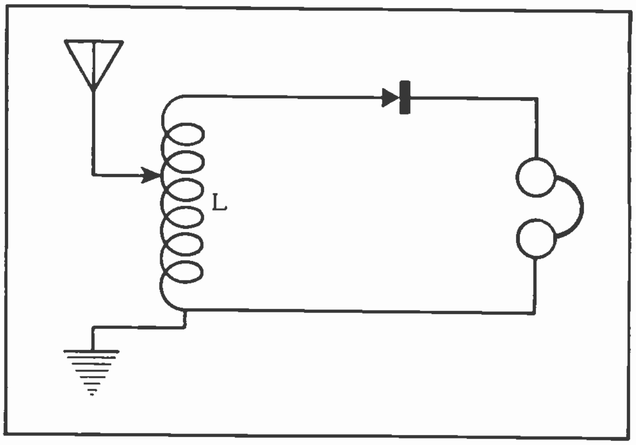

Fig. 39. This sketch shows a circuit for a simple crystal detector radio receiver.

30. AMPLIFICATION WITH CRYSTALS AND LOCAL BATTERY

Some crystals such as those made of carborundum can be used with a small amount of current from a local battery added to that from the antenna, to obtain a sort of feeble amplification of the signal, through the valve action of the crystal.

Fig. 41 shows a complete circuit diagram for a receiver of this type.

A variable condenser is used for tuning the circuit and a small fixed condenser "C" is connected across the phones and battery, to shunt or pass by them, the radio frequency current. This condenser is not large enough, however, to pass the audio frequency variations. Because of its function it is often called a **by-pass** or **bridging** condenser.

The amount of battery voltage applied to the crystal and phones is carefully adjusted for best results, by means of a high resistance rheostat or potentiometer P.

31. CARE AND USE OF DETECTOR CRYSTALS

To obtain best results from detector crystals they should be kept clean and free from dust and grease, even being careful not to get the oil from ones hands on them by careless handling. Dirty crystal surfaces can be cleaned by washing with alcohol.

When it seems difficult to locate any sensitive spots by feeling or exploring the crystal surface with the point of the cat-whisker, new spots can often be uncovered by carefully chipping away small sections or layers of the crystal.

When operating a crystal receiver, one explores the crystal with the cat-whisker while listening with the phones. When a sensitive spot is touched it will be known by a slight hissing sound in the phones. This sound is partly due to static or atmospheric disturbance.

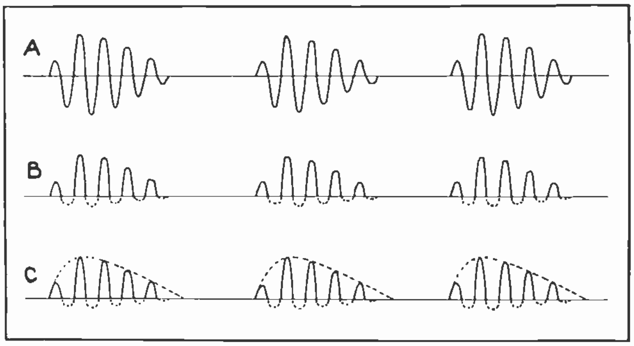

Fig. 40. The curve at A represents the alternating current induced by damped wave-trains striking an aerial. At B is shown the curve for this energy after it has been rectified into pulsating D. C. by the crystal. At C the large dotted curves illustrate how each group of pulsations supply one current impulse to the headphones.

Next adjust the tuning coil and condenser to the wave length of the desired station, tuning it in as loud and clear as possible. Then make a final adjustment of the cat-whisker, or find the spot where the signal is best.

Crystal receivers have received messages and signals from transmitters hundreds of miles distant, will produce very clear and undistorted signals, and are very cheap to construct. But they have the disadvantage of requiring frequent adjustment and being incapable of any great degree of amplifcation.

For these reasons vacuum tube receivers are much more dependable, and have replaced crystal sets almost entirely.

32. VACUUM TUBES

Before taking up vacuum tube types of radio receivers and amplifiers it will be well to get a thorough general understanding of vacuum tube construction, operation and characteristics, and their functions as detectors and amplifiers.

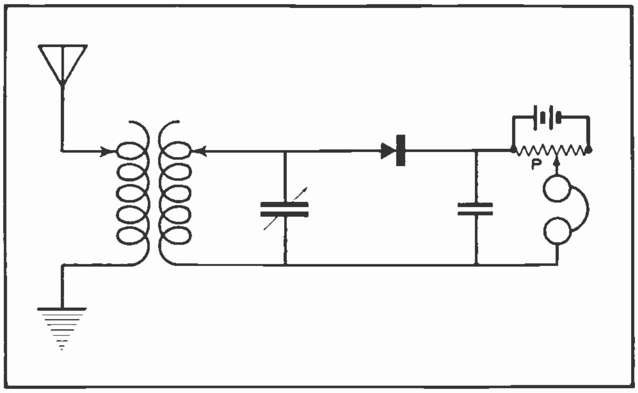

Fig. 41. Sketch of a crystal detector circuit using a battery and potentiometer for applying voltage to the crystal and obtaining slight amplification of the received signal.

Vacuum tubes play a most important part in practically all modern radio equipment, and in fact have made possible the development of radio from the spark and crystal stage to the splendid equipment in use today. So again we wish to emphasize the value of obtaining a good understanding of these interesting devices.

You have already learned about the general construction of the common three element vacuum tubes and their function as oscillators, in articles 9 and 10 of this section, but at this point we will cover a few more details of their construction, explaining their operation in general and also their function as detectors and amplifiers.

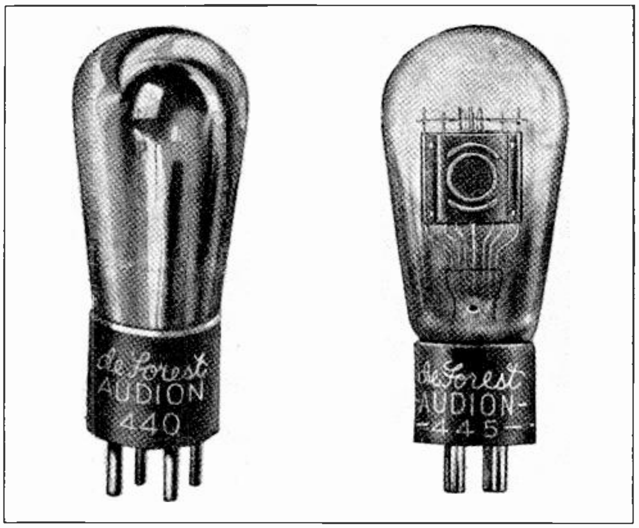

Fig. 42. Two types of vacuum tubes such as commonly used in radio receivers.

Fig. 42 shows two ordinary vacuum tubes such as are used by the millions in radio receivers. The tube on the left has the inside of its bulb covered with a silvery coating which is deposited on its inner surface in the process of manufacture, and on account of this coating we cannot see the parts inside. The tube on the right, however, has a clear bulb, and the thin pressed metal plate can be clearly seen, and some of the support wires for the filament and grid are also visible.

Note the manner in which the sealed glass bulbs are cemented into the insulating bases, through which the connection prongs project. These prongs hold the tubes in sockets and complete the circuits to the socket terminals.

33. TUBE CONSTRUCTION AND FUNCTIONS OF PARTS

You will recall that the three important elements of the tube are the filament, grid and plate. The filament being heated to throw off electrons to complete a circuit and establish current flow between the plate and filament; the plate used as a positive

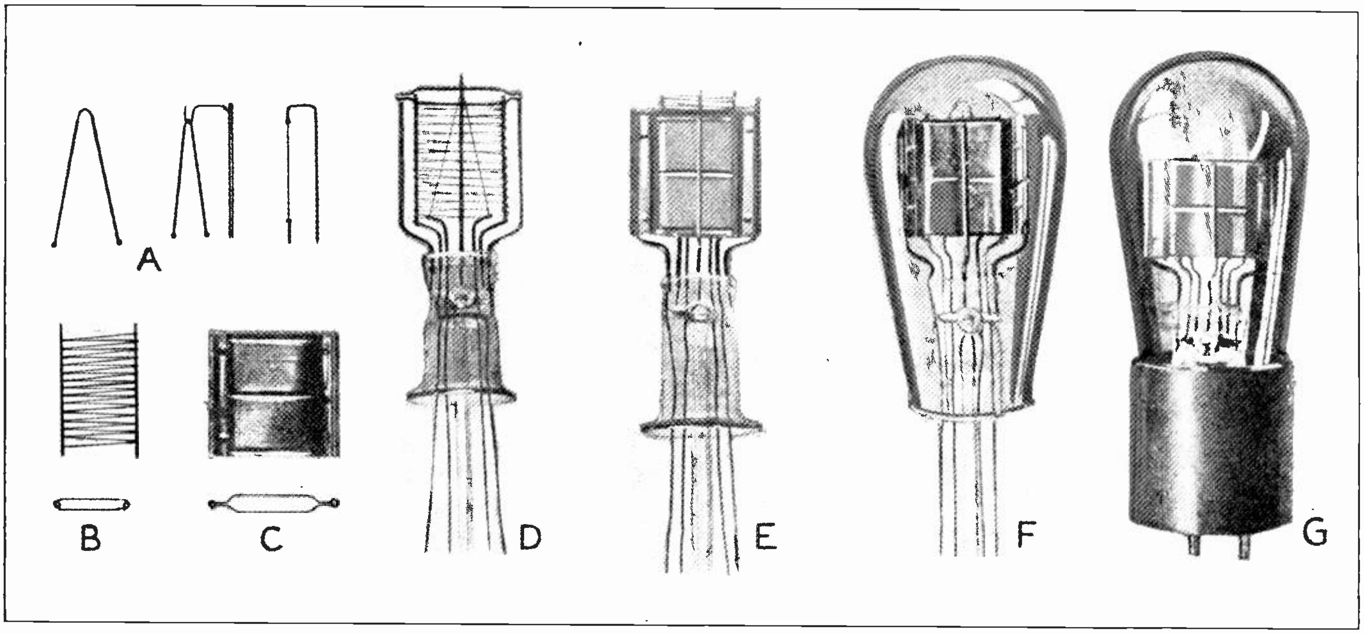

Fig. 43. The above views show the various parts of a vacuum tube and illustrate the manner in which these parts are assembled and mounted in the complete tube. Refer to these views frequently while reading the accompanying paragraphs.

electrode to supply current from the B battery; and the grid being used as a control element or shutter to regulate the electron stream and the current flow. Fig. 43 shows these various elements before they are assembled in the tube, and also shows the completed tube.

The filament is just a simple loop of high resistance tungsten or nickel wire, as shown both with and without its support at A, or in some cases just a single straight strip of this material held in place by a supporting wire, as shown by the right hand one of these filaments at A.

The tungsten filaments of later model tubes are usually treated with thorium, and the nickel wires coated with oxide, to make them emit electrons more freely at lower temperatures. This makes them much more efficient than the older types, as the ordinary small tubes with the thoriated or oxidized filaments only require about .25 ampere, or ¼ as much filament current as the older tubes. Many of these filaments operate at such low temperatures that they need only be heated to a dull cherry red, while others are operated at white heat or incandescence.

Filaments of D. C. tubes are heated by current from a low voltage "A" battery, ranging from 1½ to 6 volts, and filaments of A. C. tubes are heated by current from the low voltage secondary winding of a filament or power transformer.

Tube filaments are rather delicate and the tubes should never be roughly handled or the filament wires are likely to become broken or bent into contact with the grid. Filaments are also easily burned out if too high voltage is applied to them.

At B in Fig. 43 is shown the grid of the tube. This grid consists of a coil or spiral of fine nickel wire and is placed around the filament, between it and the plate, and supported so that it does not touch either the filament or plate. See Fig. 44. The grid support consists of two small stiff wires which have their lower ends imbedded in the glass of the tube as shown at D in Fig. 43. Here the filament and grid are both shown mounted on their support wires which have been imbedded in the top of the glass post while it was hot and soft.

As previously explained the grid, when positively or negatively charged, acts as a control or shutter to regulate the stream of electrons from the filament to the plate.

The filament electrons being negative will be attracted to the grid when it is positive, and the electron flow thereby increased. When the grid is negative it repels most of the electrons, throwing them back toward the filament, and thus greatly reducing the stream of electrons to the plate.

At C in Fig. 43 is shown the plate of the tube. This plate is made of a thin sheet of nickel, formed into a flattened or oblong tube or jacket, and when mounted it surrounds the filament and grid as shown at E in Fig. 43.

Note the wires which are attached to the filament, grid and plate, and taken down through the glass stem of the tube for connection to the tube prongs.

The plate when connected to a B battery or other source of direct current supplies current to the tube and this current is controlled by the number of electrons between the filament and plate. These electrons being controlled by the grid, the grid also controls the plate current flow.

At F is shown the glass bulb placed over the parts and ready to be melted or sealed to the base of the glass inner support, thus making the tube air tight.

Before finally sealing the bulb, it is evacuated or has the air practically all pumped out. After this process it is sealed, fitted with a bakelite base and the lead wires are connected to the prongs in this base.

In some cases a very small amount of inert gas is allowed to remain in the tube when it is evacuated, and in other cases a small quantity of alkali gas is put in the tube after the air is drawn out.

Tubes of this type with low vacuum or with gas content are often referred to as **soft tubes,** and are generally used for detectors. Tubes with higher vacuum are called **hard tubes,** and are more commonly used as amplifiers; although they are also used as detectors in some cases.

Evacuating the tubes or removing the air and oxygen from them prevents the rapid burning away or oxidization of the heated filaments, and also makes a lower resistance path for current between the plate and filament.

In certain types of modern vacuum tubes a small cup of magnesium is placed inside the tubes before sealing, and after evacuation and sealing the magnesium is exploded by means of a powerful high frequency field. The burning magnesium absorbs or consumes the small amount of gases left in the tube after evacuation. It is this process which causes the silvery deposit or coating on the inside of certain tubes.

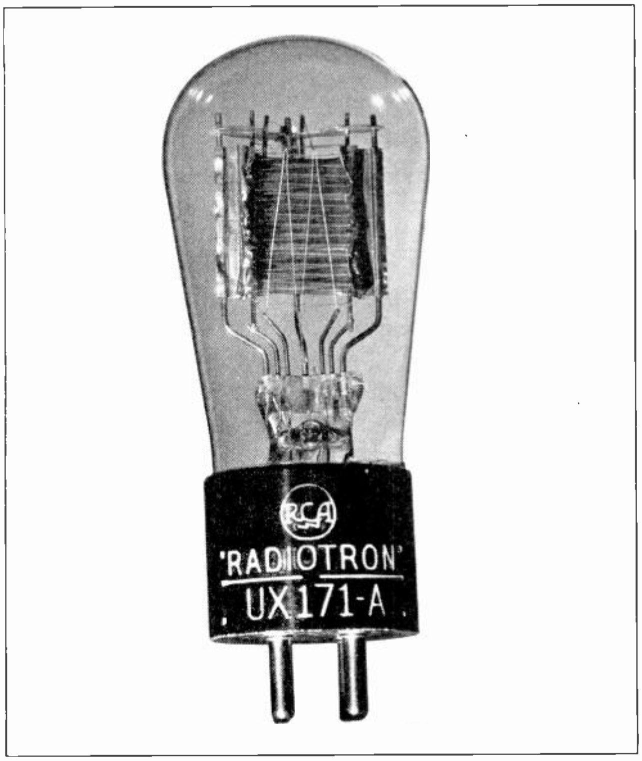

Fig. 44. Photograph of a vacuum tube with the plate opened up on one side to show the location of the grid and filament which are surrounded by the plate.

Vacuum tubes are made in different sizes and types for use as detectors, amplifiers, and oscillators in various radio equipment.

The average serviceable life of a good tube with proper treatment should be between 800 and 1,000 hours of use.

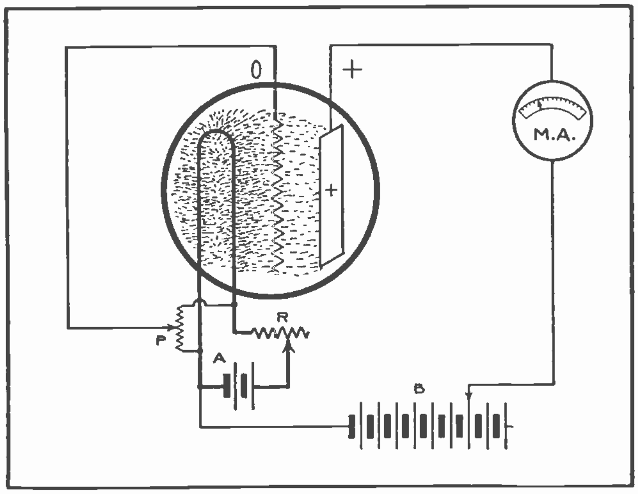

Fig. 45. This sketch illustrates the electron flow from the filament to the plate of a vacuum tube when no potential is applied to the grid. You will note that only a moderate amount of electrons are attached to the plate while the grid is in this condition.

34. OPERATION OF VACUUM TUBES

In Fig. 45 is shown a sketch of a common type of 3 element vacuum tube. The filament is connected to a low voltage battery (1½ to 6 volts) called an "A" battery, which supplies current to heat the filament.

The plate is connected to a higher voltage battery (22½ to 45 volts) called a "B" battery, which supplies a positive charge to the plate.

The grid of the tube in this case is connected to the center of a potentiometer, which is connected across the filament. This is done to allow an adjustment of the grid potential or voltage, which is obtained from either the positive or negative filament lead.

Note the three circuits thus formed. They are the **grid circuit,** consisting of the grid, grid lead, potentiometer, filament, and the gap from the filament back to the grid; the **filament circuit,** consisting of the filament, "A" battery and rheostat R; and the **plate circuit,** consisting of the plate, plate lead, milliammeter "MA", battery leads, "B" battery, one side of filament, and the gap from the filament back to the plate.

When such a tube is cold and has no current flowing through its filament, no plate current will flow as the gap between the filament and plate is too high resistance.

When the filament is heated by passing current through it **electron emission** is set up, and millions of negative electrons are thrown off around it in all directions. Some of these electrons fly across to the plate, due to the attraction of the positive plate for the negative electrons, thus completing a circuit and allowing a very small current to flow from the B battery in the plate circuit. This current can be measured in milli-amperes by the meter M A.

35. PLATE CURRENT

This current which flows in the plate circuit when no signal voltage is applied to the grid, or when the grid is at normal potential, is called the **normal plate current.** The amount of normal plate current flow will depend on the type of tube, upon the electron emission from the filament, and upon the voltage applied to the plate. It commonly ranges from 5 to 40 milliamperes in common receiving tubes.

If the plate voltage is gradually increased, it also increases the positive attraction for the negative electrons, thereby increasing the number that stream to the plate. Therefore, as the plate voltage is increased, the plate current flow will also increase, up to a certain maximum value, where it will not increase appreciably with further plate voltage increase. The reason the plate current will not increase much beyond this point is because the increased plate voltage is drawing all of the available electrons emitted by the filament. This point is called the **saturation point.**

To increase the plate current beyond this value, we would need to increase the electron emission from the filament by increasing its temperature.

Fig. 46 shows a curve which illustrates the manner in which the plate current changes with variation of plate voltage.

This curve is approximate and shows the general plate voltage, plate current characteristic of common receiving tubes, although its shape would vary a little for different types of tubes.

Note how the plate current increases quite slowly as the voltage is raised from 0 to 60 volts, and then increases very rapidly as the voltage is raised from 60 to 200. Beyond this, however, the plate current increases very little for any further voltage increase.

By careful examination of the curve, tracing up along the 60 volt line to the point where it crosses the curve, then reading to the left along a horizontal line to the left edge of the chart, we find the first 60 volts applied to the plate will only produce about 2½ milliamperes. The next 60 volts, however, will raise the current from 2½ to about 8½ milliamperes, and the next 60 volts brings it up to about 15 milliamperes. From this point on the curve begins to level off, and the next 60 volt increase only raises the plate current from 15 to a little above 18 milliamperes.

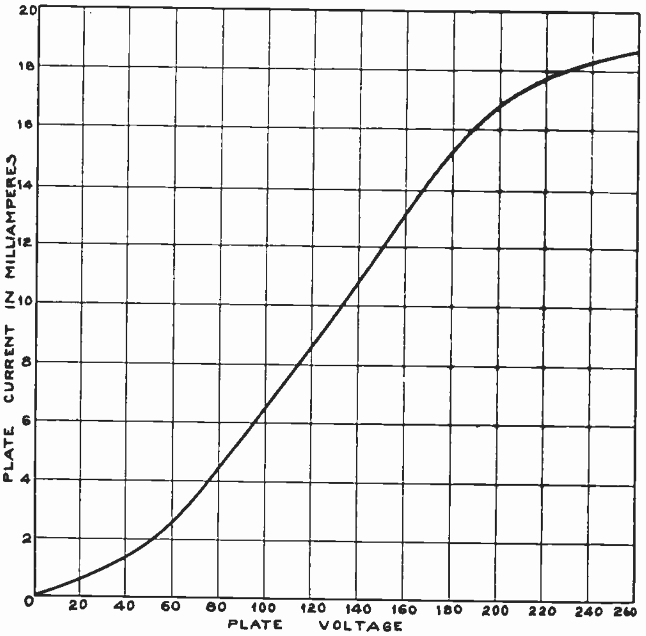

Fig. 46. Curve showing the manner in which the plate current of a vacuum tube varies with changes of the plate voltage.

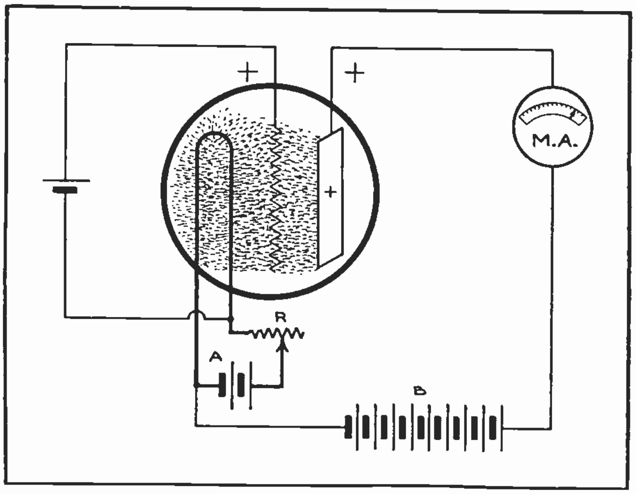

Fig. 47. This sketch shows the greatly increased flow of electrons from the filament to the plate of a vacuum tube when the grid is positively charged at very low potential.

36. CONTROL ACTION OF GRID

In Fig. 45 the grid lead of the tube is connected through a potentiometer to the filament, and the grid kept about at zero potential so it takes practically no part in the tube action or in causing the plate current. The plate current flow is simply due to the moderate amount of electrons drawn from the filament to the plate by its positive attraction.

In Fig. 47 is shown another sketch of a tube with the grid positively charged by means of a low voltage battery connected in its circuit.

In this case the grid return lead is connected to the positive filament lead to prevent the A battery from applying negative potential which would overcome the effect of the cell in the grid circuit.

When the grid is positively charged in this manner, even at very low potential, because it is close to the filament it exerts a great attractive force on the negative electrons from the filament, and causes them to stream toward it in great quantities. When these electrons reach the grid, a few strike and cling to it, but because they are then getting near to the plate which is of much greater positive potential, most of the electrons fly right on through the grid to the plate, as shown in Fig. 47. Compare the number of electrons between filament and plate in this sketch with the number in Fig. 45, where the grid is at zero voltage.

The greatly increased stream of electrons when the grid is positively charged as in Fig. 47, causes a corresponding increase in plate current, as shown by the milliammeter in the plate circuit. Compare its reading with that of the one in Fig. 45.

In Fig. 48 is shown another sketch of a tube with the grid negatively charged, by reversing the polarity of the battery cell connected in its circuit and leaving the grid return connected to the negative side of the filament. In this case the negative charge on the grid repels the negative electrons from the filament, throwing most of them back toward the filament and allowing only a very few to get through the plate.

This nearly complete shutting off of the electron stream in the gap between the filament and plate, reduces the plate current nearly to zero, as shown by the milliameter in the plate circuit in Fig. 48.

Compare very carefully figures 45, 47, and 48, until you are sure you fully understand the effect of the grid in controlling the plate current as the grid potential is varied or reversed.

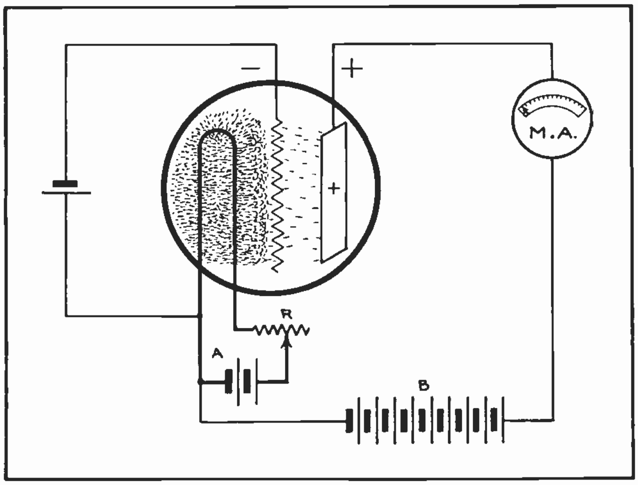

Fig. 48. The above diagram shows the manner in which the electron flow from filament to plate is almost entirely shut off when the grid of the tube is negatively charged. Compare this sketch with those in Figures 45 and 47.

37. VALVE AND DETECTOR ACTION OF TUBES

We have found that the tube acts as a very sensitive valve, with the grid controlling the current in the plate circuit. It only requires a very small change of potential on the grid to make a much greater change in the plate current. So vacuum tubes also have an amplifying function, due to the fact that a very small amount of energy on the grid, even as small as a few millionths of a watt, will release and control much greater amounts of energy from the B battery.

As the plate current is direct current supplied by the B battery, and only flows in one direction, we also find that a tube connected in such circuits will act as a **rectifier.** Or in other words, we can supply feeble **alternating voltage** to the grid circuit and have strong **direct current pulsations** set up in the plate circuit of the tube.

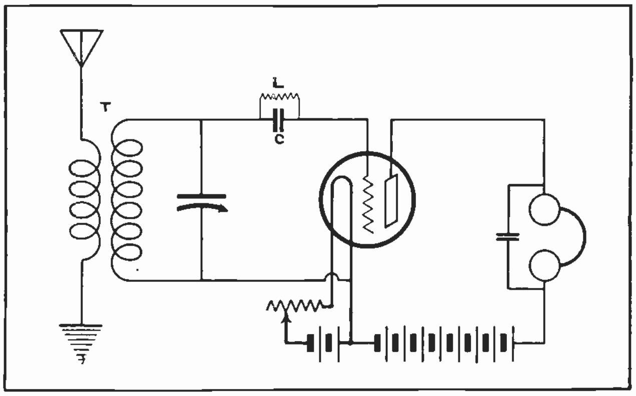

Fig. 49. Diagram of a simple single tube detector circuit using a grid leak and condenser to obtain detector action.

As explained in an earlier article, rectification of the received high frequency energy is necessary to accomplish detection and to enable the headphones to produce audible signals.

From the foregoing we find this rectification and detection can be accomplished with vacuum tubes as well as with crystals.

In Fig. 49 a vacuum tube is shown connected in a simple detector circuit for receiving radio signals. The grid circuit is connected through a grid resistance and condenser, L and C, to the secondary winding of the antenna coupling-coil or R. F. transformer T, and then back to the filament. The grid resistance and condenser will be explained later.

A variable condenser is connected across the R. F. transformer for tuning the circuit to the proper wave length. A pair of headphones and a bypass condenser are now connected in the plate circuit in place of the milliammeter shown in the previous circuits.

38. RECTIFIER ACTION

When the antenna and grid circuits are tuned to receive signals from a transmitter, high frequency A. C. is induced in the grid circuit and this alternating voltage is applied to the grid.

Each time the grid becomes negative the electron stream is diminished and the plate current reduced below normal. Each time the grid becomes positive the electrons are allowed to reach the plate in greater numbers and the plate current is greatly increased. **Thus the application of high frequency A. C. causes pulsating D. C. to flow in the plate circuit.**

If the incoming carrier wave is modulated by voice or code signals, the variations in the value of the A. C. voltage applied to the grid will cause corresponding audio frequency variations in the pulsations in the plate circuit. This in turn sets up vibration of the headphone diaphragms and reproduces the sound.

Fig. 40 showed the audio frequency pulsations resulting from rectified groups of the high frequency waves of code signals, and while these groups were rectified by a crystal detector we now find that tubes will produce the same result. Vacuum tubes are much more sensitive as detectors than crystals are, because the tubes can use such very feeble voltages on the grid to control strong impulses from the B battery through the headphones.

39. OPERATION OF DETECTOR TUBE. GRID VOLTAGE, PLATE CURRENT CURVE

The detector action of vacuum tubes can be greatly improved by taking advantage of a known characteristic of the tube and using just the right grid and plate voltages to work the tube at a certain point on its grid voltage plate current curve. At this particular point the pulsations will be more pronounced in one direction from normal plate current, thus producing greater variations in the pull on the phone diaphragms and greater signal strength.

This point of maximum effectiveness of the tube as a detector is illustrated by Fig. 50, which shows the **grid voltage, plate current curve** or characteristic of a tube. This curve shows the manner in which the plate current of a common type of detector tube will vary with changes in grid voltage.

Note that as the grid voltage is reduced from about 8 volts negative to zero potential, the plate current only increases very little, or from zero to about 1½ milliamperes. As the grid voltage swings past zero and becomes positive, the plate current increases very rapidly for each volt of increase in positive grid potential, up to the point where it nears saturation.

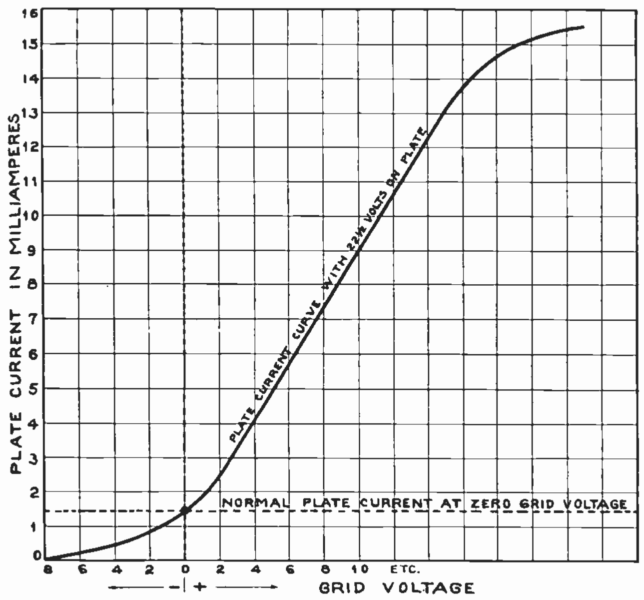

Fig. 50. The above curve shows the manner in which the plate current of a vacuum tube changes with variations of the grid voltage.

By using 22½ volts on the plate of this tube, the lower knee or bend of the curve is kept about at the point of zero grid potential, as shown by the vertical dotted line crossing the curve about at this knee. The normal plate current which flows at zero grid voltage is indicated by the horizontal dotted line. Changing the plate voltage will change the shape of the curve somewhat. For example the plate voltage will cause a greater change in plate current for each volt of change in grid potential, and will cause the plate current curve to shift so that the zero grid voltage line will cross it at a point farther out in the straight portion.

If a detector tube is worked with the zero grid voltage point at the knee of the curve as shown in Fig. 50, the alternating voltage applied to the grid will cause the pulsations of plate current to rise farther above normal value than they fall below. This is illustrated in Fig. 51. Here a section of a plate current curve is shown from A to B, the alternating grid voltage curve of an incoming damped wave signal from G1 to G6, and the resulting curve of the pulsating plate current from P1 to P6.

The voltage values of the alternations applied to the grid can be determined by the figures at the tops of vertical dotted lines, and the current values of the D. C. pulsations set up in the plate circuit can be determined by the figures at the left ends of the horizontal dotted lines.

The normal plate current which flows at zero grid potential is shown by the heavy solid and dotted horizontal line. By following the vertical dotted line down from the tip of any alternation of the grid voltage to the point at which it strikes the plate current characteristic curve AB, and then following the horizontal line to the right, the plate current pulsation curve for that grid voltage is found. Then by looking to the left margin the current value of the plate pulsation or impulse can be determined.

You will note that while the positive and negative grid voltage alternations are equal in value or amplitude, the positives cause the plate current to rise about three times as far above normal as the negative cause it to fall below normal. This results in an average current increase or one long pulsation through the headphones. See the curved dotted line which indicates this.

In this diagram only three complete H. F. alternations are shown for the damped wave signal, but an actual wave group of this kind would probably consist of 12 to 30 or more oscillations, and the entire group of pulsations set up by them would be used to make up one of the audio frequency pulsations through the headphones.

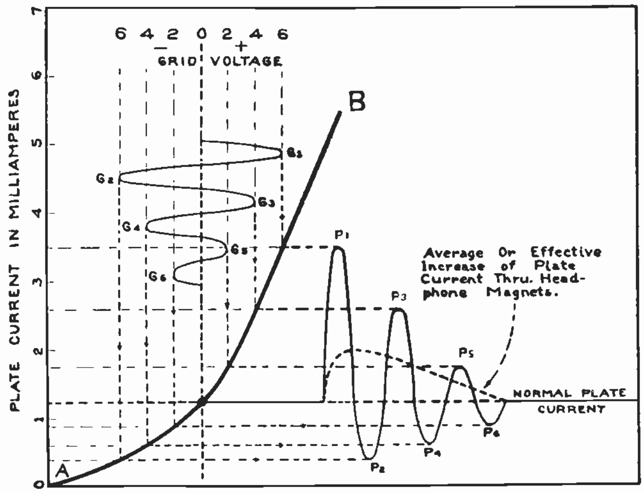

Fig. 51. Curves showing the manner in which the signal voltage of a damped wave train is applied to the grid of a tube, and is both amplified and rectified in the resulting plate current impulses. Study this action carefully in the accompanying paragraphs.

40. GRID BIAS VOLTAGE

We have already stated that a detector tube can be worked at its most efficient point, by using the proper plate voltage to bring the bend or knee of the plate current curve at about zero grid potential. This condition was shown in Fig. 51.

Another method of obtaining rectification or detector action, with maximum variations in plate current for each change of signal voltage on the grid, and thereby producing greater movement and sound from the phone diaphragms, is by giving the grid a negative bias. This means applying or keeping a negative potential on the grid at all times.

This negative potential or bias can be obtained in several different ways. One way being to connect the grid return lead to a point between the filament rheostat and the negative side of the A battery, as at X in Fig. 52 A. This causes a negative potential equal to the voltage drop in the negative side of the filament plus that in the rheostat, to be applied to the grid.

Another method is by use of a "C" battery or biasing battery as shown in Fig. 52 B. Here a low voltage battery C1 is connected in the grid return with its negative terminal toward the grid and its positive terminal to the filament lead. A small by-pass condenser C2 is often connected in parallel with this battery to allow the high frequency signal energy in the grid circuit to pass directly to the filament lead.

At C in Fig. 52 is shown a method of using a potentiometer or variable high resistance P, connected across the C battery for varying the negative biasing voltage applied to the grid. Here again the by-pass condenser C2 is used to keep the feeble signal energy from having to pass through this high resistance in order to get to the filament and complete the grid circuit.

41. GRID LEAK AND CONDENSER

At D in Fig. 52 the negative grid bias is obtained by means of a **grid condenser** and **leak,** GC and GL, which you may recall were also shown in the detector circuit in Fig. 49. These devices accomplish the biasing of the grid in the following manner:

When the tube is in operation some of the negative electrons thrown off by the filament strike the grid and cling to it, thus tending to build up a slight negative charge on the grid. If the grid return is connected to one side of the filament as is generally the case, these negative electrons will flow right back to the filament or their source. If the grid lead was not connected to anything, the electrons not being able to drain or flow off from it would soon accumulate in sufficient amount to build up a considerable negative potential on the grid, and stop practically all flow of electrons from filament to plate, by the repelling action of this negative charge on the grid.

Now if we had some way of holding just the proper amount of this negative charge on the grid and allowing the rest to escape, we could give the grid the desired negative bias in this manner. That is exactly what we do with the grid condenser and grid leak.

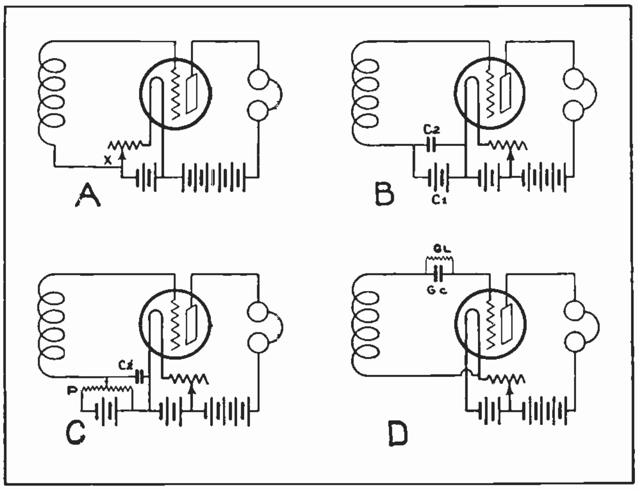

Fig. 52. The above sketches show four common methods of biasing the grid of a vacuum tube with a low negative potential.

The grid condenser, while allowing the high frequency A. C. signal energy to pass through it to the grid, will not allow the direct current flow of electrons or **grid current** to pass through it from grid to filament, around the grid circuit. Thus it acts as a blocking condenser to store up electrons and negative charge or bias on the grid.

Now to prevent this charge becoming too high we place a high resistance "leak" across the condenser to allow the excess electrons to leak back to the filament whenever the grid potential gets high enough.

By selecting the proper sizes of grid condenser and leak for various tubes or circuit conditions the detector tubes can be properly biased for operation at the best point on their curves, and maximum signal strength thus obtained at the headphones. The size of grid condenser commonly used is about .00025 microfarad (mf.), and the grid leaks vary from about .5 to 10 megohms, the 2 megohm size being the most common.

A low resistance leak allows the electrons forming the grid current to flow away from the grid more rapidly, thus maintaining lower negative potential or bias on the grid. A high resistance leak tends to hold back the electrons and grid current flow until greater negative potential is built up on the grid to force them to flow through the resistance back to the filament, and thus the higher resistance maintains a greater negative grid bias.

Too high grid leak resistance may cause the tube to become inoperative or "paralized", by storing up such a high negative potential on the grid that it stops practically all flow of electrons from filament to plate.

Early forms of grid leaks were made with an inked strip of paper held in a tube or case with contact clips at its ends. The ink formed the very high resistance path through the leak. Later forms of grid leaks consist of a thin metallized or graphite coating applied in liquid form and dried and baked on the inside of a glass tube, or on a slender insulator element in the tube.

The grid leak method of detection is more sensitive than the C battery method and is therefore best to use for very weak signals, from the antenna. The C battery method is best for handling strong signals, as there is less liability of overloading the tube. One advantage of the grid leak method is that a leak of proper resistance will automatically control or adjust the grid bias for variations in signal strength. This can be understood by applying Ohms Law. We know that the current flow through any certain resistance will be proportional to the voltage applied. So whenever the electrons tend to build up a higher negative potential on the grid, this higher potential speeds up the rate of flow through the grid leak and keeps the negative bias quite well controlled.

42. EFFECT OF NEGATIVE BIAS

Now let us see just what effect this negative bias has on the operation of a detector tube.

First of all it allows the use of much higher plate voltages, to obtain greater output from the tube and stronger signals in the headphones. Then by biasing the grid with a negative potential the incoming signal oscillations simply cause the grid potential to become more or less negative, instead of positive and negative. This in turn causes all the variations or changes in plate current to be below normal instead of part above and part below, as when the grid is operated at zero potential.

Operating the tube with a negative grid bias, or keeping the grid always at some negative potential, also prevents the grid from attracting to itself such large numbers of electrons from the filament and thereby reduces the **grid current.** Excessive grid current is very objectionable as it robs the plate circuit of some of its current thereby reducing the tube efficiency, and it also tends to cause distortion of the signals.

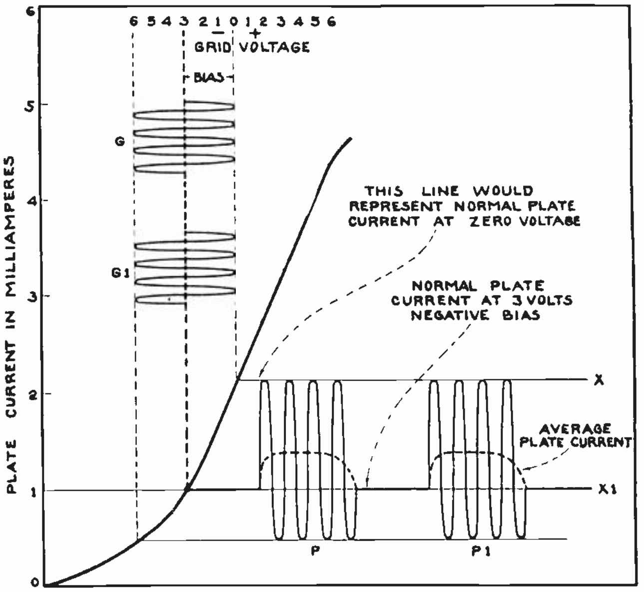

Fig. 53. These curves illustrate the rectifier or detector action obtained from a tube operating with a negative bias on the grid. This sketch shows I.C.W. signals applied to the grid, instead of damped wave signals as shown in Fig. 51.

The manner in which a negative grid bias or potential reduces the grid current can be readily understood by keeping in mind that if the grid is always slightly negative it will not attract negative electrons to itself, even though it will allow them to pass through between the grid wires to the plate if the positive plate voltage is kept high enough to draw them on through. On the other hand, if the grid is not biased and is allowed to become positive on every other alternation of the applied signal voltage, it then attracts negative electrons to the grid wires, robbing the plate of that amount, and setting up grid current flow in the grid and filament circuit.

Fig. 53 illustrates the manner in which a constant 3 volt negative grid bias from a C battery or some DC source is used on a detector tube to work the tube at the proper point or knee of the plate current curve applied to it, which has high plate voltage.

The use of the higher plate voltage causes the plate current curve to shift over so that the point of zero grid voltage comes in the straight portion of the curve, as shown by the light dotted vertical line running down from zero. The horizontal line X would represent the normal plate current at zero grid voltage.

By using the 3 volt grid bias the working point of the grid voltage is shifted to the left of zero as shown by the heavy dotted vertical line. The normal plate current with the grid bias in use is represented by the horizontal line X1.

The curves G and G1 represent two groups of I. C. W. or interrupted continuous wave signal voltages applied to the grid. This signal voltage being alternating and of 3 volts amplitude, swings back and forth from 3 volts positive to 3 volts negative. But on account of the 3 volts bias the grid signal voltage starts at 3 volts negative and causes the grid voltage to swing from zero to 6 volts negative and back again, but never positive.

The resulting pulsations or variations in the plate current as shown by the curves P and P1, increase and decrease from about 2.2 to .4 milliamperes, but never rise above the line X or what would be the normal current at zero grid voltage.

The average plate current or the audio frequency pulsations which flow through the headphones are shown by the dotted curves.

43. EFFECT OF GRID LEAK AND CONDENSER ON SIGNAL STRENGTH

Fig. 54 illustrates approximately the operation of a tube using the grid leak and condenser method of biasing the grid. In this case the negative bias is not constant as with the C battery, but builds up during each signal group as the grid accumulates more and more electrons as each positive alternation of the signal voltage is applied to it. This causes the bias voltage to swing from zero over to negative about as shown by the dotted curve X. This is due to the negative electrons accumulating on the grid a little faster than they can leak off during the signal. Then during the idle period between groups of alternations the leak drains the grid potential down to zero again, as shown in Fig. 54 by the dotted curve X falling back to the vertical zero line each time between signal groups.

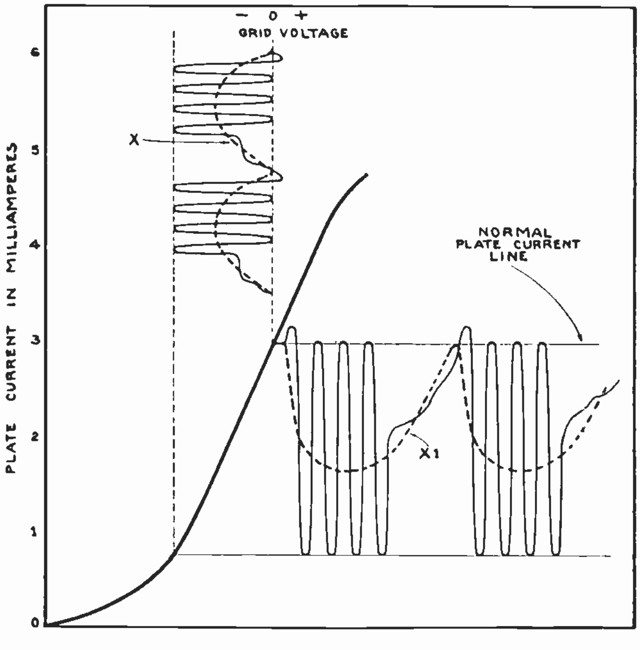

Fig. 54. Curves illustrating detector action of a tube using a grid leak and condenser to obtain maximum rectification with plate current impulses falling below the normal plate current.

However, the fact that the biasing voltage keeps practically all of the grid voltage variations on the negative side, the pulsations of plate current are practically all downward from the normal plate current. The dotted curve X1 shows the approximate average plate current, and you will note the very decided decrease from normal during each signal group. This decrease of current through the phone magnets releases their diaphragms, and then as the average current rises back toward normal between signal groups the diaphragms are again attracted, thus causing strong vibration.

You will also note that this form of bias allows the tube to be worked on a straight portion of the steeper curve above the bend or knee, thus making the full swing or change or grid voltage much more effective in producing decreases or variations in the plate current. This is one of the reasons for the extreme sensitivity of the grid condenser and leak method of detection.

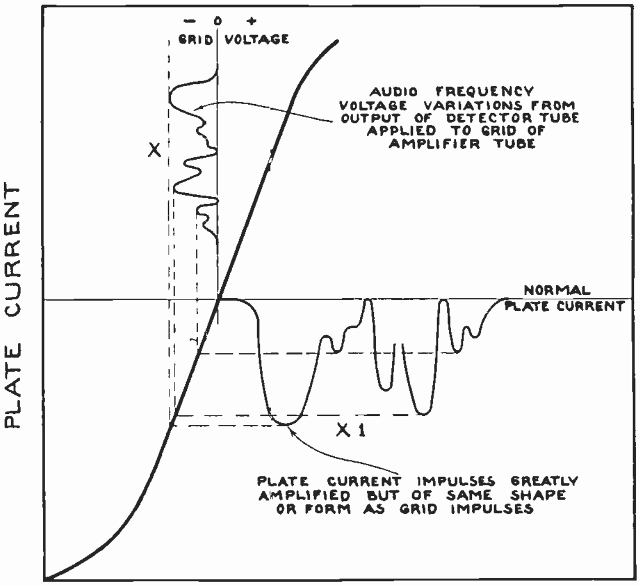

Fig. 55. Detector action illustrated with audio frequency curves of the average variations caused in the grid voltage and plate current by the voice modulation on the carrier wave.

44. VACUUM TUBES AS AMPLIFIERS

We have already learned that vacuum tubes can be used for amplifiers as well as for detectors, because of the fact that a small change in grid voltage and power will cause a much greater change in plate current and power.

For amplification we do not need to operate the tube at the knee of its curve as we do to obtain best results in rectification and detection. Instead we operate it on the straight portion of the curve so that all variations or increases and decreases of grid voltage will be amplified equally, and the waves or impulses kept unchanged in shape and merely increased in amplitude or volume.

Fig. 55 illustrates this amplifier action of a vacuum tube. The average voltage or output impulses of

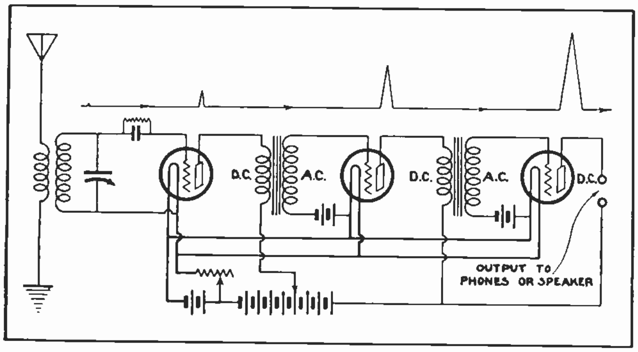

Fig. 56. Circuit diagram of a simple 3 tube receiver with one tube used as a detector and two as amplifiers. Note how the signal strength is increased by each tube.

the detector tube are applied to the grid of this amplifier tube as shown at X. These are greatly amplified in the pulsations of plate current in the amplifier tube as shown at X1, but you will note that they retain their original shape or form.

In Fig. 56 is shown a circuit by means of which the output of the detector tube is fed to the grid of an amplifier tube through an audio frequency transformer. The output of this amplifier tube is then fed to the grid or input of another tube for still further amplification if desired. This would be referred to as two stages of **Audio Frequency** amplification, as these amplifier tubes only handle the energy after it is detected and converted into A. F. pulsating D. C., by the detector tube and impedance of the first transformer primary. Each separate amplifier tube with its transformer and circuit is called one **stage** of amplification.

The peaks in the horizontal line above the circuit diagram in Fig. 56 illustrate how the signal strength is increased by the amplification effect of the detector tube and by both of the amplifier tubes.

The output of the detector tube is pulsating D. C., but by passing this through the primary of the first A. F. transformer it sets up A. C. in the secondary and in the grid circuit of the first amplifier tube.

This alternating current, however, carries the same general wave form and variations in value as the pulsating D. C., and thus conveys the signal to the grid of the amplifier tube. Here again it is amplified and rectified to pulsating D. C., and then passed on through the next A. F. transformer to the next amplifier tube, etc.

The audio frequency transformers not only serve as a means of coupling the tubes and circuits together but also serve to aid amplification by increasing the voltage on the grids of following tubes, as these transformers are generally wound with a step-up ratio of about 1 to 2 or 1 to 3.

Amplifier tubes are also used to increase the strength of the signal before it reaches the detector tube. This is called R. F. or **radio frequency** amplification as it is done before the energy is rectified and converted to audio frequency. Fig. 56-B shows the manner in which an R. F. amplifier tube increases the voltage or amplitude of the incoming R. F. signal and leaves it in the same true I. C. W. form, for rectification later in the detector tube.

45. AMPLIFICATION FACTOR

Some vacuum tubes are better amplifiers than others, depending upon their construction, and in particular upon the size and spacing of the grid wires and the distance between the grid and plate. Using small diameter grid wires, closely spaced, and placing the grid closer to the plate increases the amplifying ability of a tube.

The term **Amplification Factor** is used to express the amount of amplification that can be obtained with a certain tube. This Greek letter Mu (μ) is used as a symbol for amplification factor, and the expression "low Mu" or "high Mu" is often used in connection with amplifier tubes to express their ability as amplifiers.

The amplification factor of a tube is determined by comparing the amount of plate voltage increase required to make a certain change in plate current, with the change of grid voltage required to make the same amount of change in plate current.

For example, if a 3 volt change in grid voltage makes a change of 10 milliamperes in the plate current, and it requires a change of 30 volts on the plate to make the 10 milliamperes variation in plate current, then the amplification factor of that tube will be 30 ÷ 3 or 10. The amplification factor of ordinary tubes such as the 201 or 301 types usually ranges from 6 to 10 although special high Mu tubes are made with amplification factors of 30 to 40 or more.

Amplifier tubes are used for **Voltage Amplification** in some parts or radio receivers, and for **Power Amplification** in other parts. Voltage amplification

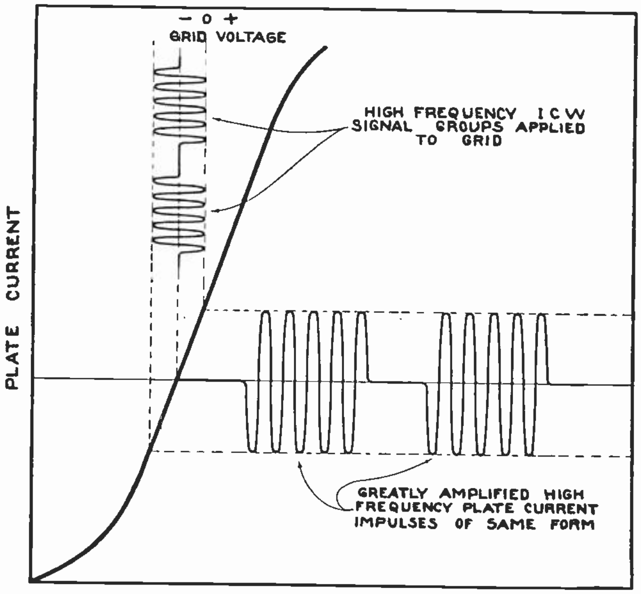

Fig. 56-B. Curves illustrating amplifier action of a vacuum tube. Note that the grid voltage impulses are greatly amplified or increased in the plate current impulses, but are kept in the same form instead of being rectified.

to merely increase the voltage on the grid of each successive tube, is commonly used in radio frequency stages and in the first audio frequency stages, while power amplification which increases both voltage and current is used in the final audio frequency stages.

For very sensitive detectors special soft, low vacuum or gas filled tubes are sometimes used, but in many sets ordinary hard or high vacuum tubes are used both for detection and amplification.

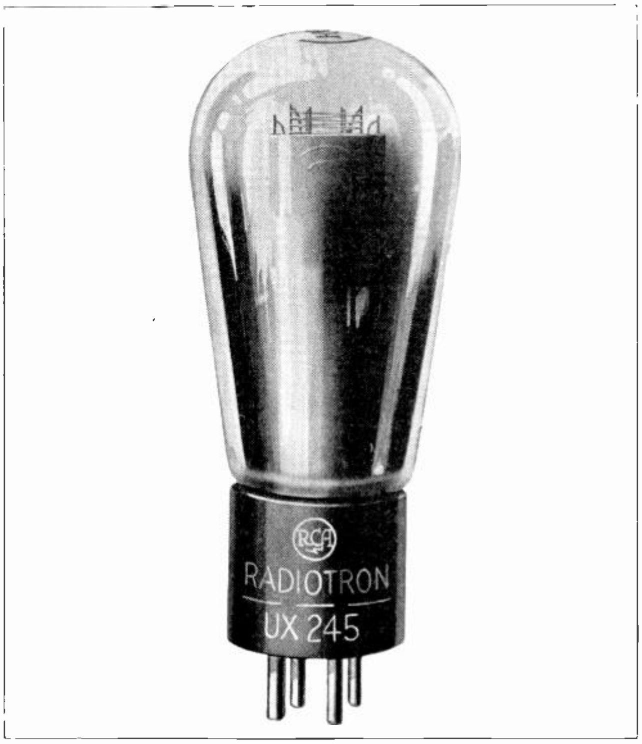

Fig. 57. Photo of power amplifier tube such as used for obtaining great amplification and handling larger amounts of plate current for producing stronger signals from radio receivers. (Photo courtesy of R. C. A. Radiotron Co., Inc.)

For power amplification larger tubes of special construction, having lower internal resistance and greater capacity in milliamperes or watts are used. These power tubes provide the energy required for operation of large loud speakers and for better reproduction of the heavy bass notes of music. Power tubes are very similar to ordinary amplifiers, except that their elements are larger, and they are designed for much higher plate voltages. Fig. 57 shows a power tube which has a capacity of 34 milliamperes plate current, or over 1.6 watts without distortion.

46. SPACE CHARGE

The cloud or stream of negative electrons which are thrown off by a tube filament into the space between the filament and plate, create a negative charge in this space. This is called the **Space Charge** in a tube.

The space charge tends to prevent free emission of electrons from the filament, as the negative charge or electron already in the space tend to repel and throw back the fresh electrons coming from the filament. The space charge is of course greatly reduced by the positively charged plate and also by the grid at any time it becomes positive, because they tend to attract the electrons, drawing them away from the filament more rapidly.

One way of further reducing the space charge is to equip a tube with an extra grid located between the regular grid and the plate, and by keeping this grid at some positive potential to aid the plate in attracting the negative electrons.

This extra grid is called a **screen grid** or **shield grid** and will be more fully described in later paragraphs.

47. INTERNAL CAPACITY EFFECT IN TUBES

There is a small amount of capacity or condenser effect between the metal elements inside a vacuum tube, as these parts being separated by gas or vacuum and supplied with varying voltages, act as plates of a small condenser.

The capacity between the grid and filament and between the plate and filament is generally about 5 M. M. F. (micro-micro-farads), or small enough so it does not interfere with the tube operation to any great extent. The capacity between the plate and grid, however, is about 8 M. M. F. in common detector and amplifier tubes, and may have a decided effect on the operation of the tube.

This capacity is extremely small when compared with most of the condensers used in radio circuits, one micro-micro-farad being only one millionth part of a micro-farad. But even this small amount of 8 M. M. F. in a tube is sufficient to create enough capacity coupling between the input and output circuits of the tube at radio frequencies, to set up a feed back from the plate or output to the grid or input circuit. This often results in bad oscillation of the circuit and howling in the phones or speaker. In other cases the capacity between the tube electrodes causes absorption of energy from the input circuit by the output circuit.

There is also a certain amount of capacity between the socket terminals and wiring of tubes to add to this undesirable coupling effect through the tube.

In order to prevent oscillation and howling, and reduced efficiency of the tube and its circuits, this tube capacity must either be neutralized in some manner, or reduced to a minimum by special construction within the tube. A method of neutralizing it by means of a small condenser outside the tube will be explained later. A method of reducing the capacity effect in newer type tubes is by the use of the extra grid or screened grid which has already been mentioned for reducing space charge.

48. SCREEN GRID TUBES

The screen grid, we have now found, will serve a double purpose of **reducing the space charge** and also **reducing the interelectrode capacity** of tubes.

Fig. 58 shows a diagram of a screen grid tube connected in one stage of a radio receiver. This sketch shows the screen grid connected to the B battery or plate current supply, at a point which will supply it with from 22 to 45 volts positive potential. It is this positive potential which causes the screen grid to attract negative electrons toward itself and toward the plate which is charged positive at 90 to 135 volts or more, and draws most of the electrons on through to itself. In this manner the screen grid helps to reduce the space charge, thereby greatly increasing the efficiency and the amplification factor of the tube.

Amplification of 30 to 60 times can be obtained with screen grid tubes, as compared with 6 to 10 times for ordinary tubes without this extra grid.

You will note in Fig. 58 that the screen grid is made in two parts one of which is between the control grid and the plate, and the other on the outside of the plate so that a complete shield is formed around the plate.

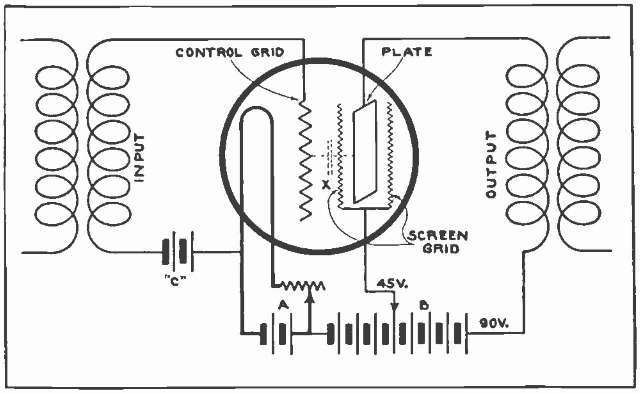

Fig. 58. Diagram of a screen-grid tube showing the connection of the screen grid, and illustrating the manner in which it reduces the capacity between the control grid and plate.

The capacity between the control grid and plate in a tube without the screen grid, would be as shown by the dotted condenser X. But when the screen grid is inserted it acts as a shield between the grid and the electrostatic field around the plate and thereby reduces the capacity effect between grid and plate to about .01 M. M. F. as compared with 8 to 10 M. M. F. in ordinary tubes.

This very great reduction of grid to plate capacity of the tube almost entirely prevents objectionable oscillation and feed back.

The inner section of the screen grid consists of a spiral of closely spaced fine wires, very much like the regular control grid. The outer shield or section of the screen grid surrounding the plate consists of a screen mesh or a perforated band of sheet metal.

Fig. 59 shows a screen grid tube with part of the outer screen and plate cut away to show the inner construction. Note the inner section of the screen grid which surrounds the filament and control grid, and is located between the control grid and the plate.

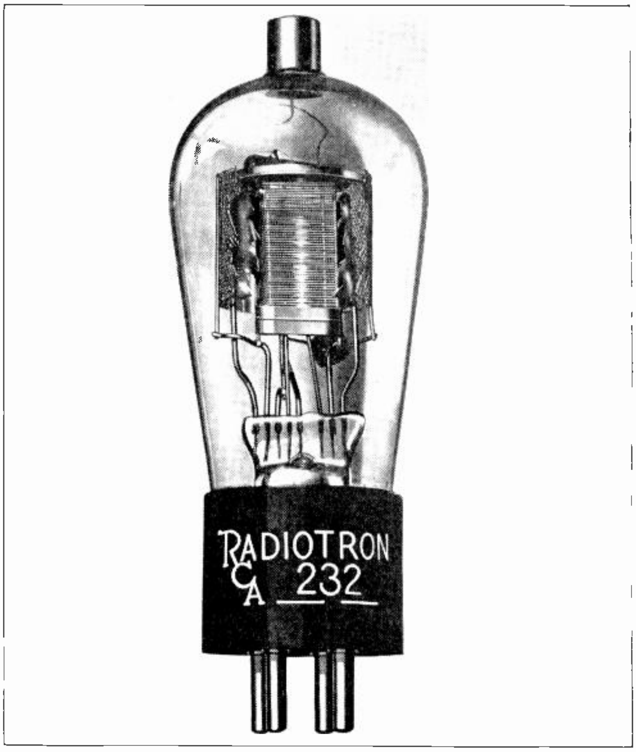

Fig. 59. This excellent photograph shows a vacuum tube with part of the outer screen grid and part of the plate removed, to clearly show the inner screen grid in its position between the control grid and plate. (Photo courtesy of R. C. A. Radiotron Co., Inc.)

The screen grid lead is brought out to the regular grid prong on the tube base, and the control grid lead on this type of tube is brought out to the small metal cap on top of the tube.

Screen grid tubes being very sensitive to outside capacity influence require good shielding from other stages and parts of the circuit. Where complete interstage shielding is not provided the tubes themselves are often equipped with grounded metal shields or hoods.

Screen grid tubes are largely used as R. F. amplifiers, although in some cases they are used as detectors.

49. PLATE RESISTANCE AND MUTUAL CONDUCTANCE

The internal resistance or plate circuit resistance of a vacuum tube depends upon several factors in the tube design, such as (a) spacing between tube elements, (b) length and area of filament, (c) filament condition-temperature and efficiency of electron emitting surface, (d) area of plate, (e) amplification factor, and (f) applied voltages.

This plate resistance of course causes a certain amount of loss in the tube, proportional to the amount of resistance. It is, therefore, desirable to keep the plate resistance as low as possible without changing the tube design in such a manner that it interferes with other desirable characteristics.

For example, a tube which is constructed with the proper spacing between grid wires and between the grid and plate, to obtain a high amplification factor, generally has a high plate resistance also.

The plate circuit resistance to D. C. can be easily determined according to Ohms law, or by dividing the plate voltage by the plate current. For example, if a certain tube has 45 volts applied to its plate and shows a plate current flow of 1.7 milliamperes or .0017 amperes, then as

$$R = \frac{Ep}{Ip}$$

the resistance will be $\frac{45}{.0017}$ or 26,470+ ohms.

Plate resistance is generally expressed in Ohms resistance to the A. C. component of the pulsating D. C. plate current, and as this value is approximately one half that of the D. C. resistance, it is easy to determine the A. C. resistance by calculating the D. C. resistance and dividing it by 2. The term **plate impedance** was formerly extensively used for A. C. resistance, but the latter term is now becoming more generally used.

As both the plate resistance and the amplification factor of a tube greatly affect its performance, the term **Mutual Conductance** which considers both of these factors, is quite generally used in expressing or comparing the values of tubes of the **same general type.**

Mutual conductance is expressed in **Micromhos,** and is found by dividing the amplification factor of a tube by its plate resistance, or

$$GM = \frac{\mu}{rp}$$

In which GM = Mutual Conductance in micromhos
μ = Mu or amplification factor
rp = plate resistance

In general, tubes with high mutual conductance are more efficient amplifiers than those of similar types having lower mutual conductance (GM). One should be sure, however, that the comparison is made between tubes of the same general type or tubes designed for the same service, and with similar characteristics in other respects. This is because tubes of a different type having more of certain other characteristics might be better under certain conditions.

50. A. C. TUBES

Early types of vacuum tubes were all developed with filaments designed for heating with D. C. from low voltage A batteries, and great quantities of D. C. operated tubes are still made for use in battery operated sets in farm homes and places where electric power supply is not yet available. Most modern radio sets for use in city homes and places where 110 volt A. C. power is available, are made with A. C. tubes, which have their filaments heated by current from the low voltage secondary of a transformer. This is a great convenience as it eliminates the necessity of the messy and bulky wet storage batteries formerly used for filament power.

A. C. tubes are of two general types known as **Filament Type** and **Heater Element Type.**

A. C. "filament type" tubes have simple filaments very much like those of D. C. tubes, except that they are generally made of a shorter and heavier wire. This enables them to hold their heat a little longer and does not allow the heat to vary so much with the rise and fall of the A. C. voltage.

In filament type A. C. tubes the filament serves as the cathode or electron emitter the same as in D. C. tubes.

In order to avoid very objectionable hum from the variations in the A. C. voltage, it is necessary to connect the grid return on these tubes to a center point on the filament, so that the voltage drop is equally balanced on each side of this connection. This is done either by using the center tap on a resistance unit connected across the filament terminals, or by use of a center tap sometimes provided on the secondary of the filament transformer. At A in Fig. 60 is a sketch showing how this connection is made to the center tap of a resistor, and the dotted lines show how it would be made to a center tap on the transformer. Use of a resistance with a variable center tap allows the grid connection to be adjusted to the point of best balance and least hum.

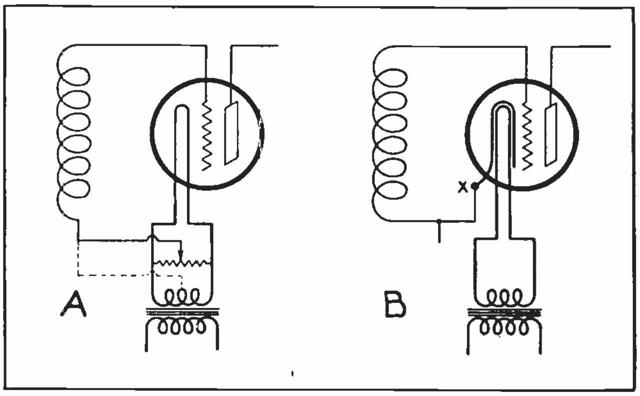

Fig. 60. At A is shown a vacuum tube using A. C. to heat the filament, and having the grid return lead connected to the center of a potentiometer. At B is shown an A. C. heater-element type tube using A. C. for the filament and having a separate cathode which is heated by the filament.

Filament type A. C. tubes are only used as amplifiers and oscillators but not for detectors, because even with the most careful selection of the neutral point for the grid return, considerable hum will be set up if they are used as detectors. Filament type A. C. tubes are generally called the "26" type as these last two numbers of the tube description number are commonly used to designate this type of tube. It is well to note at this point that the last two numbers on a tube, are the ones that usually denote its type, and the preceding letters and numbers indicate the manufacturer.

51. HEATER ELEMENT TUBES

Heater element type A. C. tubes use a small oxide coated nickel cylinder as the cathode or electron emitter, and this cathode is heated by a filament which is placed inside the cylinder but is insulated from it. In these tubes the filament serves only as the heater element and not as the cathode or electron emitter, and can therefore be made of ordinary tungsten wire.

The filament being entirely insulated from the cathode or electron emitting element practically none of the influence of the A. C. voltage variations is allowed to affect the cathode. In this manner practically all A. C. hum is eliminated.

The grid return lead on these tubes is connected to the cathode lead which is brought out to a fifth prong on the Y type, five prong bases used for these tubes. Fig. 60-B shows the connection of the grid return to the cathode lead at X. Fig. 61 shows a sketch of a heater element type A. C. tube, showing a sectional view of the elements. Note the location of the filament or heater wire inside the insulator which separates it from the cylindrical cathode. This view clearly shows how the cathode is heated by heat from the filament passing through the insulator to the cathode, and also how the insulator separates the filament and cathode electrically, thus preventing A. C. hum.

The grid and plate are also shown in sectional view in this sketch.

Fig. 61-A shows a photo of an A. C. heater element tube with part of the special mesh type plate torn away to show the grid and cathode inside.

A. C. tubes of the heater element type require from a few seconds to a half minute or more to heat up and become operative, as it takes a little time for the heat from the filament to pass through the insulating tube to the cathode. This time lag in the heat change is desirable, however, as it also works the other way, requiring a short period for the cathode to cool off, and thus making the tube less sensitive to momentary voltage variations and to the continuous variations in the A. C. voltage due to its alternations.

A. C. tubes of the heater element type are used both for detectors and amplifiers. Their filaments operate on about 2.5 volts and require about 1.75 ampere.

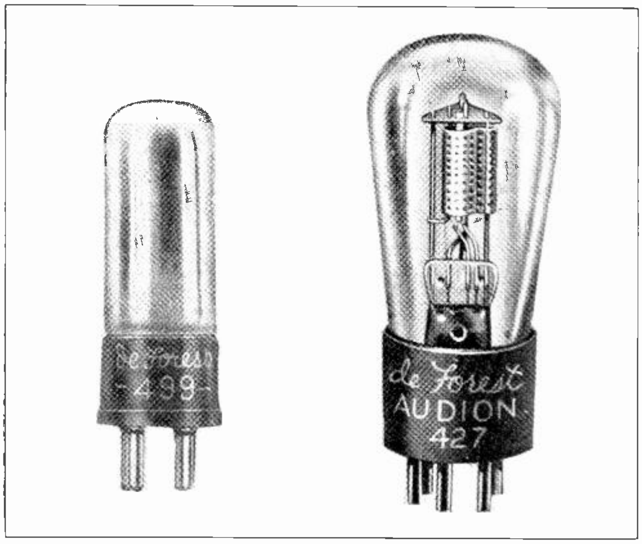

Fig. 61. Photo showing two different types of vacuum tubes for use in radio receivers. The filament of the small tube on the left can be operated on dry cells thus making it very good for use in portable sets. (Photo courtesy of DeForest Radio Co.)

Fig. 61-A. Photograph of an A. C. heater-element vacuum tube with part of the plate removed to show the grid and the cathode inside of which the heater element or filament, is located. (Photo courtesy of R. C. A. Radiotron Co., Inc.)

52. TYPES OF VACUUM TUBES

Vacuum tubes for receivers are made in a wide variety of types and sizes, ranging from the little dry cell operated detectors and amplifiers up to power amplifiers capable of handling several watts.

For transmitting purposes, amplifier, modulator and oscillator tubes are commonly made in sizes ranging from 15 watts to 20,000 watts, and some special tubes have now been made to handle 200,000 watts.

On the left in Fig. 61 is shown a "99" tube of the dry cell operated tube for use in portable receiving sets or sets for use in places where A. C. power supply is not available and where storage batteries are undesirable. These tubes use less than .07 amp. at 3 volts for their filaments, so can be operated on a few dry cells for several months of ordinary use.

On the right in Fig. 61 is shown a "27" tube such as commonly used for either detector or amplifier duty. This is an A. C. tube of the heater element type.

On the left in Fig. 62 is shown a "24" tube of

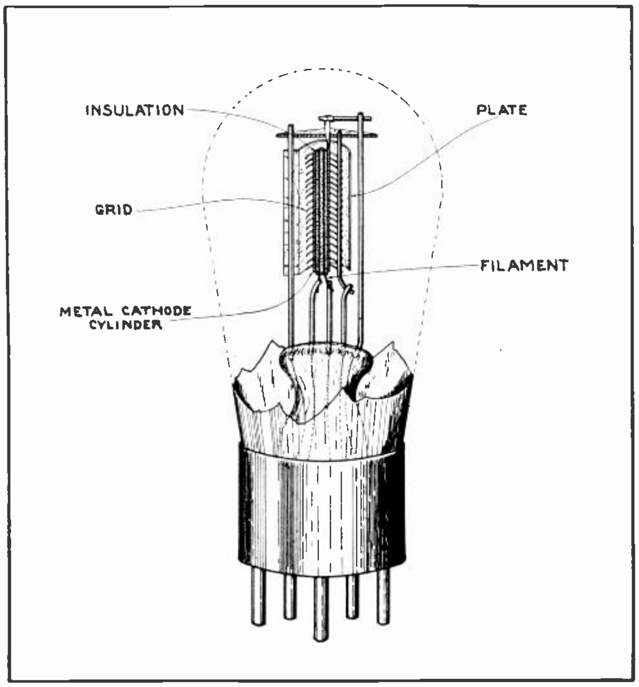

Fig. 61-B. This sketch gives a sectional view of an A. C. tube and shows the construction of the heater element, its insulator, the cathode, grid, and plate of the tube.

high Mu or high amplification factor. This is an A. C. heater element screen grid tube.

On the right in Fig. 62 is shown a "50" power amplifier tube which operates with a filament voltage of 7.5 volts, filament current of 1.25 amperes, plate voltage of 250 to 450 volts, and is capable of handling 4.6 watts of undistorted power output.

Fig. 63 shows a 15 watt transmitter tube on the left and a 50 watt tube on the right. Fig. 64 shows a 250 watt transmitter tube on the left and a 5,000 watt transmitter tube on the right. This 5,000 watt tube is water cooled by circulating cool water through the large metal jacket attached to the tube.

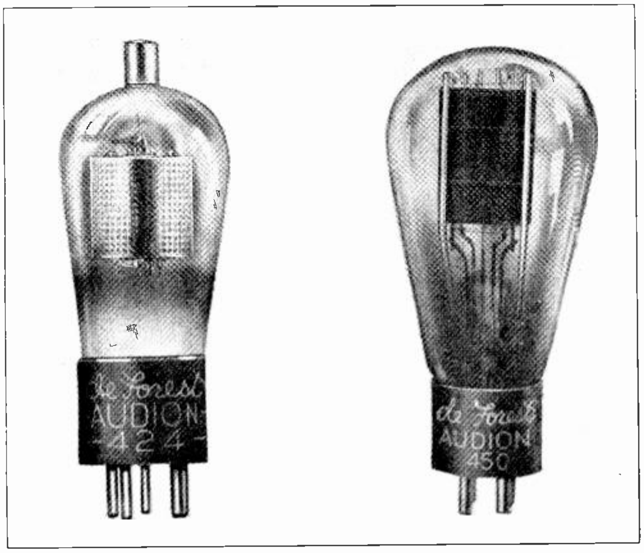

Fig. 62. On the left is shown a screen grid amplifier tube, and on the right a power amplifier tube. (Photo courtesy of DeForest Radio Co.)

In selecting or working with receiving tubes always keep in mind that the last two figures of the tube number designate the general type, and the first figure and letters denote the manufacturer. Cunningham tubes are generally known by the leters C or CX preceding their numbers, and the first figure is usually a 3, as C-301, C-327, etc.

Radio Corporation tubes are known by the letters R C A, UX, UV, or UY preceding their numbers, and the first figure is generally a 1, 2, or 8, as R C A-232, UV-199, UX-222, UX-865, etc. DeForest tubes have the name marked on the tube, and use no letters before the numbers, but the numbers generally start with the figure 4 on receiving tubes and the figure 5 on the transmitting tubes.

Regardless of whose make the tubes may be, on all those made by standard manufacturers the same last two figures always denote the same general type of tube. For example C-327, Ux-227, and 427 tubes are all detector-amplifier tubes, or tubes suitable for either detection or amplification, and they all have very similar characteristics.

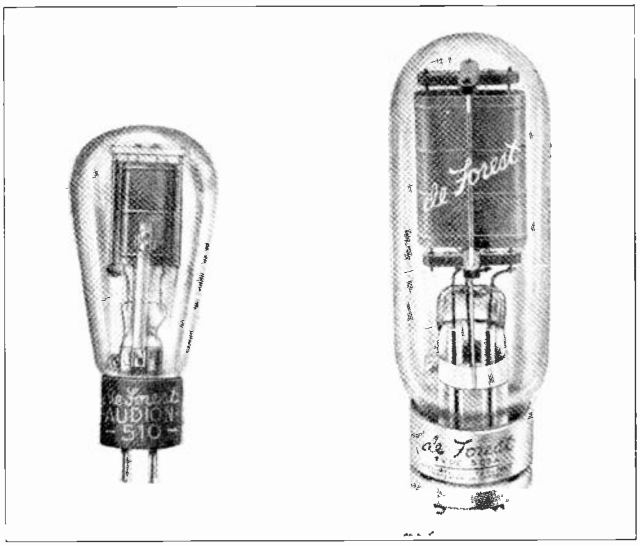

Fig. 63. This photo shows a 15 watt transmitter tube on the left, and a 50 watt transmitter tube on the right. These tubes are constructed very similarly to those for receivers except that they have larger elements spaced farther apart to handle the greater plate currents at higher voltages. (Photo courtesy of DeForest Radio Co.)

Fig. 65 is a chart giving the average characteristic of a number of the most common types of vacuum tubes used in radio receivers and in small transmitters. Study this chart very carefully noting the interesting and valuable data and information given for each tube, and if you will become familiar with the use of this chart you will find it very valuable when selecting or testing tubes for various equipment. The data given helps to select tubes with proper characteristics for the set and conditions in which they are to be used. When testing tubes one can tell whether they are in good condition or not by comparing their operation with the data given for them. This chart is also valuable when checking up on operating voltages and con-

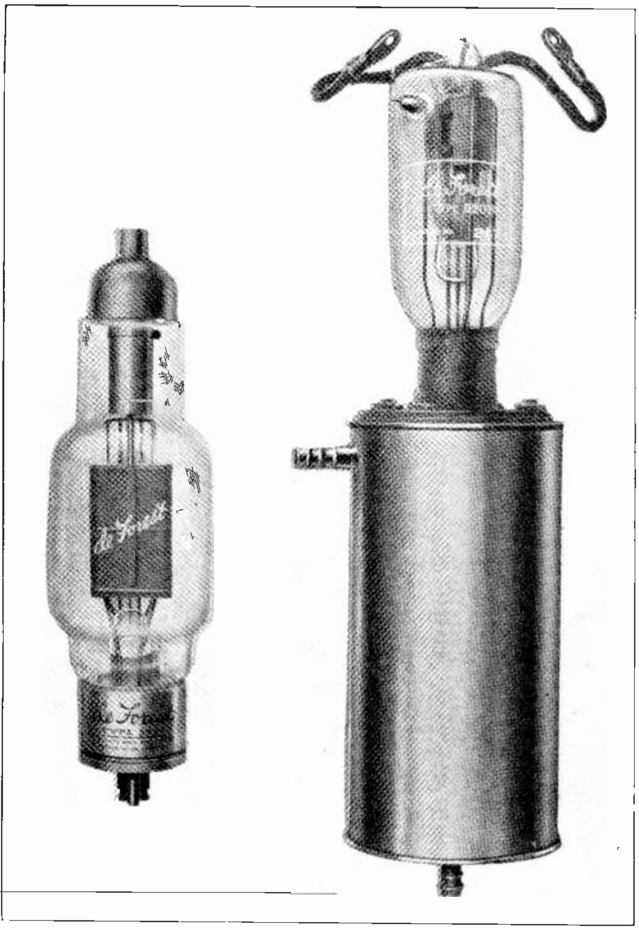

Fig. 64. The tube on the left in this photo is a 250 watt transmitter tube, and the one on the right is a water-cooled 5000 watt tube for large radio transmitters. (Photo courtesy of DeForest Radio Co.)

ditions in a set to make sure that the tubes are not being abused and to adjust the set for satisfactory efficient operation and for maximum tube life.

53. RECTIFIER AND VOLTAGE REGULATOR TUBES

Special types of vacuum tubes are also used as rectifiers in "all electric" sets for converting or rectifying A. C. to D. C. for the plate supply and grid biasing energy. Fig. 66 shows a half wave rectifier tube on the left and a full wave tube on the right.

The 481 tube on the left will give an output of 110 milliamperes, of half wave current, and the 480 tube on the right will deliver 125 milliamperes of full wave current.

The general principles of vacuum tube rectifiers have been explained in earlier sections of this reference set, pertaining to rectifiers and chargers. You will recall that here again the hot filament is used as an electron emitter to enable current to flow from plate to filament only when the plate is positive and attracts negative electrons to complete the circuit. When the plate is negative it repels the electrons and prevents the flow of current through the tube in the reverse direction. By using two plates as in the tube on the right in Fig. 66, both halves of the cycle can be rectified or passed through in one direction, current flowing first from one plate and then the other, to the filament. Fig. 67 shows another type of half wave rectifier tube a little different from the one on the left in Fig. 66, but which operates very much the same. This tube is used to obtain higher D. C. voltages than can be handled with the ones shown in Fig. 66.

Another specially designed tube is used as a ballast or voltage regulator tube in sets supplied with current from A. C. light circuits. These tubes have a fine wire anode and a large plate for a cathode, and are filled with a mixture of gasses at low pressure. When a certain voltage is applied to these electrodes the gas becomes ionized and allows current to flow from the anode to the cathode.

The valuable characteristic of these tubes is that their voltage drop remains almost constant for any value of current through them, up to their maximum load. With the tube connected in parallel with a section of the resistance which is used across the output of the B voltage supply, it tends to absorb or smooth out variations in current load drawn by the tubes in the set, thus keeping the current in the resistance uniform, and thereby keeping the voltage drop and plate voltage nearly constant.

54. REACTIVATION OF VACUUM TUBES

As mentioned before the life of good receiver tubes should be from 800 to 1,000 hours of normal use. Some tubes become inactive or very inefficient in a much shorter period, however. One should always keep in mind that the filament does not have to be burned out to make a tube useless. Tubes often fail because of a leak in the bulb and a loss of their vacuum, or after a period of service, fail because the electron emitting material has been exhausted from the surface of the filament. In other cases their electron emission may have been impaired by overloading the tubes with too high plate voltage.

In such cases tubes of the thoriated type can generally be **reactivated** or brought back to normal emission by application of carefully controlled over-voltage to their filaments.

When performing this operation the voltage should be carefully checked with a voltmeter and accurately controlled.

For ordinary reactivation about 25 to 35 percent over-voltage can be applied to the filaments for about 1 to 1½ hours, **without any plate voltage applied** during this period.

This heats the filament to a point where it boils or melts out a certain amount of the thorium from inside the metal of the wire to its outer surface, faster than the thorium is consumed by electron emission.

During normal operation of a tube the thorium consumed from the filament surface is constantly replaced by more from within the metal until the

RCA RADIOTRON AVERAGE CHARACTERISTICS CHART

DETECTORS AND AMPLIFIERS

GENERAL								DETECTION*			AMPLIFICATION									
Type	Use	Base	Max. Overall Dimensions		Filament Supply	Filament Terminal Volts	Filament Current Amperes	Plate Supply Volts	Plate Current Milliamp.	Grid Return Lead To	Plate Supply Volts	Grid Bias Voltage		Plate Current Milli-amp.	Screen Grid Volts	A. C. Plate Resistance Ohms	Mutual Conductance Microhms	Voltage Amplification Factor	Ohms Load for Maximum Undistorted Output	Maximum Undistorted Output Milliwatts
			Height	Diam.								D. C. on Fil.	A. C. on Fil.							
WD-11	Detector or Amplifier	WD-11	4 1/8"	1 3/16"	D. C.	1.1	0.25	45	1.5	+F	90 135	4.5 10.5	— —	2.5 3.5	— —	15500 15000	425 440	6.6 6.6	15500 18000	7 35
WX-12	Detector or Amplifier	UX	4 11/16"	1 7/16"	D.C.	1.1	0.25	45	1.5	+F	90 135	4.5 10.5	— —	2.5 3.5	— —	15500 15000	425 440	6.6 6.6	15500 18000	7 35
UX-112-A	Detector or Amplifier	UX	4 11/16"	1 13/16"	D. C.	5.0	0.25	45	4.0	+F	90 135	4.5 9.0	— —	5.5 7.0	— —	5600 5300	1500 1600	8.5 8.5	5600 8700	30 120
UV-199	Detector or Amplifier	UV-199	3 1/2"	1 1/16"	D. C.	3.3	0.063	45	1.0	+F	90	4.5	—	2.5	—	15500	425	6.6	15500	7
UX-199	Detector or Amplifier	Small UX	4 1/8"	1 3/16"	D. C.	3.3	0.063	45	1.0	+F	90	4.5	—	2.5	—	15500	425	6.6	15500	7
UX-200-A	Detector	UX	4 11/16"	1 13/16"	D. C.	5.0	0.25	45	1.5	−F	Following UX-200-A Characteristics Apply Only for Detertor Connection					30000	666	20	—	—
UX-201-A	Detector or Amplifier	UX	4 11/16"	1 13/16"	D. C.	5.0	0.25	45	1.5	+F	90 135	4.5 9.0	— —	2.5 3.0	— —	11000 10000	725 800	8.0 8.0	11000 20000	15 55
UX-222	Radio Freq. Amplifier	UX	5 3/8"	1 13/16"	D. C.	3.3	0.132	—	—	—	135 135	1.5 1.5	— —	1.5 3.4	45 67.5	850000 600000	350 480	300 290	— —	— —
UX-222	Audio Freq. Amplifier	UX	5 3/8"	1 13/16"	D. C.	3.3	0.132	—	—	—	180†	1.5	—	0.4	22.5	2000000	175	350	—	—
UY-224	R. F. Amp. or Detector	UY	5 1/4"	1 13/16"	A. C. or D. C.	2.5	1.75	Refer to Technical Bulletin		Cath.	180 180	1.5 3.0	1.5 3.0	4.0 4.0	75 90	400000 400000	1050 1000	420 400	— —	— —
UY-224	Audio Freq. Amplifier	UY	5 1/4"	1 13/16"	A. C. or D. C.	2.5	1.75	—	—	—	250‡	1.0	1.0	0.5	25	2000000	500	1000	—	—
UX-226	Amplifier	UX	4 11/16"	1 13/16"	A. C. or D. C.	1.5	1.05	—	—	—	90 135 180	5.0 8.0 12.5	6.0 9.0 13.5	3.8 6.3 7.4	— — —	8600 7200 7000	955 1135 1170	8.2 8.2 8.2	9800 8800 10500	30 80 180
UY-227	Detector or Amplifier	UY	4 11/16"	1 13/16"	A. C. or D C.	2.5	1.75	45	3.5	Cath.	90 135 180	6.0 9.0 13.5	6.0 9.0 13.5	2.7 4.5 5.0	— — —	11000 9000 9000	820 1000 1000	9.0 9.0 9.0	14000 13000 18700	30 80 165
RCA-230	Detector or Amplifier	Small UX	4 1/4"	1 3/16"	D. C.	2.0	0.06	45	1.0	+F	90	4.5	—	2.0	—	12500	700	8.8	—	—
RCA-232	Radio Freq. Amplifier	UX	5 1/4"	1 13/16"	D. C.	2.0	0.06	—	—	—	135	3.0	—	1.5	67.5	800000	550	440	—	—
UX-240	Detector or Amplifier	UX	4 11/16"	1 13/16"	D. C.	5.0	0.25	135† 180†	0.3 0.4	+F	135† 180†	1.5 3.0	— —	0.2 0.2	— —	150000 150000	200 200	30 30	— —	— —

*For Grid-Bias Detection, refer to Technical Bulletins.

†Applied through plate coupling resistor of 250000 ohms.

‡Applied through plate coupling resistor of 200000 ohms.

POWER AMPLIFIERS

Type	Use	Base	Height	Diam.	Filament Supply	Filament Terminal Volts	Filament Current Amperes	Plate Supply Volts	Plate Current Milliamp.	Grid Return Lead To	Plate Supply Volts	Grid Bias D. C. on Fil.	Grid Bias A. C. on Fil.	Plate Current Milli-amp.	Screen Grid Volts	A. C. Plate Resistance Ohms	Mutual Conductance Microhms	Voltage Amplification Factor	Ohms Load for Maximum Undistorted Output	Maximum Undistorted Output Milliwatts
UX-112-A	Power Amplifier	UX	4 11/16"	1 13/16"	D. C. or A. C.	5.0	0.25	—	—	—	135 180	9.0 13.5	11.5 15.0	7.0 7.6	— —	5000 5300	1600 1700	8.5 8.5	8700 10800	120 260
UX-120	Power Amplifier	Small UX	4 1/8"	1 3/16"	D. C.	3.3	0.132	—	—	—	135	22.5	—	6.5	—	6300	525	3.3	6500	110
UX-171-A	Power Amplifier	UX	4 11/16"	1 13/16"	A. C. or D. C.	5.0	0.25	—	—	—	90 135 180	16.5 27.0 40.5	19.0 29.5 43.0	12.0 17.5 20.0	— — —	2250 1960 1850	1330 1520 1620	3.0 3.0 3.0	3200 3500 5350	125 370 700
UX-210	Power Amplifier	UX	5 5/8"	2 3/16"	A. C. or D. C.	7.5	1.25	—	—	—	250 350 425	18.0 27.0 35.0	22.0 31.0 39.0	10.0 16.0 18.0	— — —	6000 5150 5000	1330 1550 1600	8.0 8.0 8.0	13000 11000 10000	400 900 1600
RCA-231	Power Amplifier	Small UX	4 1/4"	1 3/16"	D. C.	2.0	0.130	—	—	—	135	22.5	—	8.0	—	4000	875	3.5	—	170
UX-245	Power Amplifier	UX	5 5/8"	2 3/16"	A. C. or D. C.	2.5	1.5	—	—	—	180 250	33.0 48.5	34.5 50.0	25.0 34.0	— —	1900 1750	1850 2000	3.5 3.5	3500 3900	780 1600
UX-250	Power Amplifier	UX	6 1/4"	2 11/16"	A. C. or D. C.	7.5	1.25	—	—	—	250 350 400 450	41.0 59.0 66.0 80.0	45.0 63.0 70.0 84.0	28.0 45.0 55.0 55.0	— — — —	2100 1900 1800 1800	1800 2000 2100 2100	3.8 3.8 3.8 3.8	4300 4100 3670 4350	1000 2400 3400 4600

RECTIFIERS

UX-280	Full-Wave Rectifier	UX	5 5/8"	2 3/16"	A. C.	5.0	2.0	1 A. C. Voltage per Plate (Volts RMS) .... 350 1 D. C. Output Current (Maximum MA.) .... 125 2 A. C. Voltage per Plate (Maximum Volts RMS.) .... 400 2 D. C. Output Current (Maximum MA.) 110	For D. C. Output Voltage delivered to filter of typical rectifier circuits, refer to Technical Bulletin.
UX-281	Half-Wave Rectifier	UX	6 1/4"	2 7/16"	A. C.	7.5	1.25	A. C. Plate Voltage (Maximum Volts RMS.) .... 700 D. C. Output Current (Maximum MA.) 85	For D. C. Output Voltage delivered to filter of typical rectifier circuits, refer to Technical Bulletin.

SPECIAL PURPOSE

UX-874	Voltage Regulator	UX	5 5/8"	2 3/16"	Designed to keep output voltage of B-Eliminators constant when different values of "B" current are supplied.	Operating Voltage .... Starting Voltage .... Operating Current	90 Volts D. C. 125 Volts D. C. 10-50 Milliamperes
UV-876	Current Regulator (Ballast Tube)	Mogul	8"	2 1/16"	Designed to insure constant input to power operated radio receivers despite fluctuations in line voltage.	Operating Current .... Voltage Range	1.7 Amperes 40-60 Volts
UV-886	Current Regulator (Ballast Tube)	Mogul	8"	2 1/16"	Designed to insure constant input to power operated radio receivers despite fluctuations in line voltage.	Operating Current .... Voltage Range	2.05 Amperes 40-60 Volts

FOR AMATEUR AND EXPERIMENTAL TRANSMITTING USE

Type	Use*	Base	Maximum Overall Dimensions		Filament Terminal Volts	Filament Current Amperes	Voltage Amp. Factor	Normal Plate Volts	Approx. Grid Bias Volts	Approx. Screen Volts	Maximum Plate Current Amperes	Maximum Plate Dissipation Watts	Normal Power Output Watts
			Height	Width									
UX-852	Oscillator or R. F. Amplifier	UX	8 3/4"	6 1/8"	10.0	3.25	12	2000	250	—	0.10	100	75
UX-865	Oscillator or R. F Amplifier	UX	6 1/4"	2 3/16"	7.5	2.0	150	500	75	125	0.06	15	7.5
UX-866	Half-Wave Rectifier	UX	6 5/8"	2 7/16"	2.5	5.0	Maximum Peak Inverse Voltage .... 5000 Volts Maximum Peak Plate Current .... 0.6 Ampere Approximate Tube Voltage Drop .... 15 Volts						

Fig. 65. The above chart gives the characteristics of a large number of the most common vacuum tubes, and gives a lot of very valuable data that will be a great help in selecting vacuum tubes for various circuits and uses, and also in testing tubes in service. Characteristics and data for new tubes which are developed from time to time, can be obtained by writing to the R. C. A. Radiotron Company. The data given for any of the above tubes is very much the same as for tubes of similar type and number, made by other manufacturers. Tube characteristics charts can be obtained from other manufacturers by writing for them. (This chart courtesy of R. C. A. Radiotron Co., Inc.)

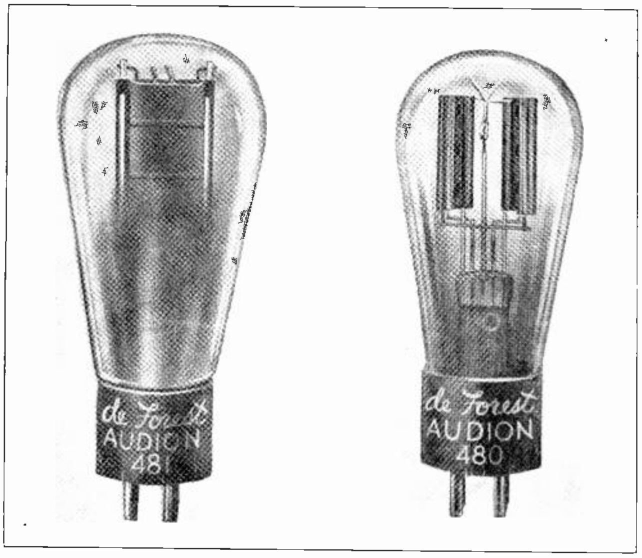

Fig. 66. On the left is shown a half-wave rectifier tube and the one on the right is a full-wave rectifier. Such tubes are used in "power packs" of A. C. receivers. (Photo courtesy of DeForest Radio Co.)

tube is worn out. If the tube is overloaded by applying excessive plate voltage it uses up the thorium on the filament surface faster than it can be replaced from within the filament metal. Thus the need for reactivation or "rejuvenation" as it is sometimes called.

If the slow reactivation just outlined doesn't succeed in bringing the tube back to normal emission and plate current at the proper filament and plate voltages, then the **flashing** process may be used.

This consists of applying from 3 to 4 times normal voltage to the filament for about 10 to 12 seconds, and then continuing for 30 minutes to an hour or more at the 25% over-voltage rate as previously explained.

By testing the tube at 30 minute intervals during the latter process it can be determined when its emission and plate current become normal again. If 2 hours reactivation treatment does not revive a tube it should be discarded.

Many common types of tubes can now be obtained at such low cost that it does not pay to spend much time trying to reactivate them.

55. GENERAL

In order to get the best service and maximum life from vacuum tubes one should see that they are operated according to the following instructions:

1. See that the filament is not operated at any higher voltage than the normal filament voltage rating, and keep the filament rheostat set as low as possible with good results. A filament voltmeter is helpful in adjusting the filament voltage.
2. Do not use high plate voltages without the proper "c" battery voltage on the grid, and never higher than the maximum plate voltage rating of the tube.
3. Always see that D. C. filament connections are made right to get proper polarity, and never reversed. Reversed polarity of the filament leads reduces the effectiveness of a tube and may cause the rheostat to be turned too high in an effort to bring the signal up to normal.
4. Do not try to operate a good tube and a bad one from the same rheostat, or the good one may be overloaded in an effort to bring the poor one up to normal.
5. If a set uses a separate rheostat to reduce the filament temperature of one or more tubes to obtain volume control, see that this rheostat is set for full volume before adjusting the filament rheostat of these tubes.
6. See that tubes are not subjected to vibration, and that they are kept tight in their sockets and ventilated sufficiently to prevent over-heating.

Vacuum tube construction, operation and characteristics have been covered quite completely in this section, and while it is not expected that you will remember all of the points covered at the first reading, if you obtain a good general understanding of vacuum tubes, and then frequently refer to this material for reference it will be extremely valuable to you, because of the importance of a good knowledge of tubes to the radio service man.

56. RECEIVING CIRCUITS

Now if you have obtained a good general knowledge of radio principles and vacuum tubes as ex-

Fig. 67. Another type of half-wave rectifier tube for use with higher voltages, such as required for the plates of power tubes. (Photo courtesy of R. C. A. Radiotron Co., Inc.)

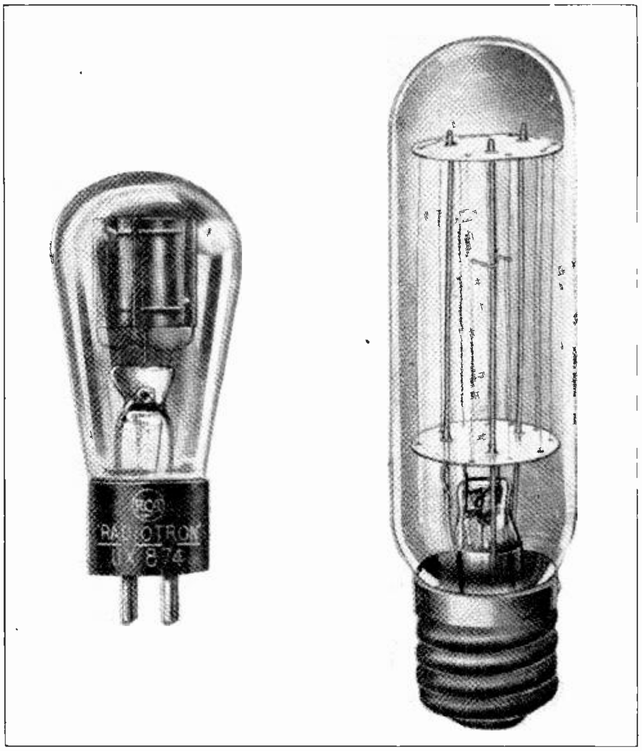

Fig. 68. The smaller tube on the left in this figure is a voltage regulator tube, and the larger one on the right is a current regulator or ballast tube. Tubes of this type are used in power supply units for A. C. receivers (Photo courtesy of R. C. A. Radiotron Co., Inc.)

plained so far, we are ready to take up common types of receiving circuits.

One of the simplest forms of radio receivers is the plain single tube detector set, such as shown in Fig. 49.

You have of course learned that any practical radio receiver must at least consist of a detector circuit, to convert the radio frequency energy into audio frequency impulses capable of operating the headphones and making audible sounds. Most sets have several stages of amplification in addition to the detector, as the detector alone can only receive signals from a limited distance, and can usually only supply power enough to operate headphones.

Examine Fig. 49 again and we find that its important parts are the R. F. coupling transformer, tuning condenser, grid leak and condenser, tube, rheostat, phones, bypass condenser and A and B batteries.

The purpose and function of each of these parts has been generally explained already. It will be well, however, to bring out certain points more in detail at this time.

The R. F. transformer is used to couple the antenna circuit to the grid circuit of the tube by magnetic induction. Inductive coupling of this type is extensively used in receivers as it gives much sharper tuning than direct conductive coupling. By adjusting the spacing between the primary and secondary coils the sharpness of tuning can be varied. Tuning becomes sharper as the coils are moved farther apart or more loosely coupled, and it becomes broader as the coils are more closely coupled.

Close coupling can be used for receiving very weak signals, and loose coupling for receiving stronger signals and keeping out other undesired signals from near by stations, and also to reduce static and other interference.

R. F. transformers or tuners with variable coupling are made in a number of forms, some with a rotating secondary coil and others with a hinged coil, while some have sliding coils. All serve the same general purpose, however.

These coupling transformers also serve to step up the signal voltage applied to the grids of the tubes, as their primary coils are generally wound with fewer turns than the secondaries. Tuning inductances or R. F. transformers for ordinary broadcast wave lengths generally have about 15 to 20 turns of about #28 cotton or silk covered wire on their primaries, and about 45 to 75 turns of #28 on their secondaries.

R. F. transformers are generally constructed in a manner to keep the distributed capacity in the coils at a minimum. This capacity is very undesirable in an inductance because of the losses it causes by the absorption of R. F. energy in the capacity effect. In order to reduce distributed capacity in inductances for radio work they are often wound with the turns spaced apart, or crossed at an angle when in more than one layer.

Many inductance coils of this type are covered over with a layer of insulating varnish which holds the turns in place and prevents moisture and dirt from affecting the insulation and inductance of the coil to such an extent as they often do untreated coils.

On the left in Fig. 69 is shown an adjustable type of R. F. transformer with the primary on the small movable form, and the secondary mounted stationary. With this type of transformer or tuner the coupling can be adjusted or set at the best point for the stations desired. The tuner on the right in this figure will be explained later.

The tuning condenser should be carefully chosen to fit the wave length to be received and the inductance of the coils. **A variable condenser of about .00035 mfd. is most commonly used for ordinary broadcast wave lengths.**

The grid leak is generally about 1 to 2 megohms and the grid condenser about .00025 M. F. Any good detector tube with a D. C. operated filament can be used in a battery set of this type. The headphones should be good ones of about 2000 to 3000 ohms resistance or more, and the bypass condenser .002 M. F. The A battery should be from 2 to 6 volts according to the type of tube used and the rheostat from 10 to 25 ohms according to the filament current required by the tube. The B battery should

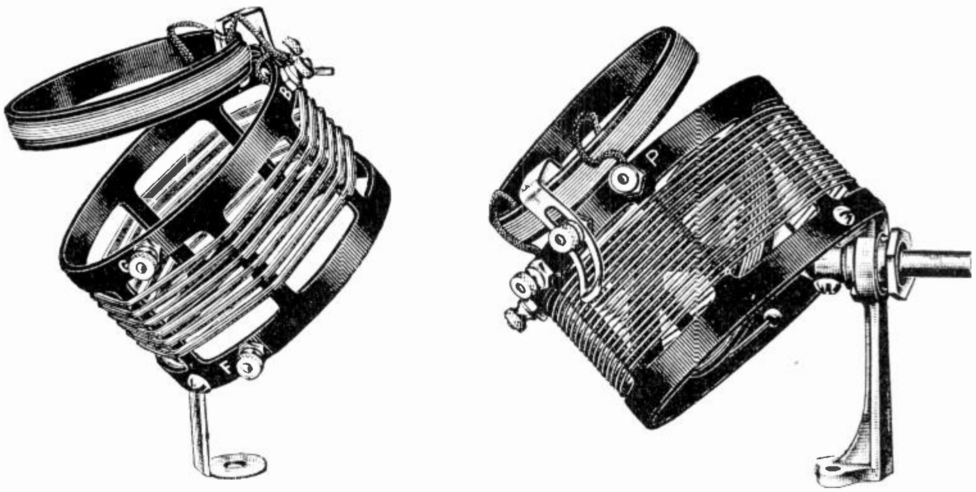

Fig. 69. On the left is shown a tuning coil or antenna coupling transformer with a movable primary for adjusting the coupling. On the right is a three circuit tuner or set of coils used for antenna coupling and regeneration. The small movable coil on the top is the primary, the large stationary coil the secondary, and the inner movable coil the "tickler" or feed back coil.

be from 22½ to 45 volts according to the type of tube used. A number of these values can be found in the tube chart, by noting the data given for the tube selected.

A detector of the type shown in Fig. 49 is extremely simple to tune and operate. One good point to keep in mind is to adjust the rheostat to operate the tube at as low filament voltage as possible with good signal strength in the phones. Burning the filament at excessive temperature does not usually improve the signal and sometimes actually makes it weaker, and it also shortens the life of the tube.

57. REGENERATIVE DETECTOR CIRCUITS

Special circuits using regenerative or reflex principles are sometimes used to get maximum results from one tube . This is often a decided advantage in portable receivers, but generally such circuits have some disadvantages such as objectionable oscillation or producing poorer quality signals.

Fig. 70 shows a diagram of a feed-back or **regenerative** detector circuit, which can be used either in single tube sets or in the detector of a set with amplifier stages.

This circuit makes use of part of the plate current to strengthen the charge on the grid, by induction between a coil L2 in the plate circuit and the grid coil L1. By tracing this circuit you will find that the plate current passes through coil L2.

The radio frequency variations of current which exist in the plate circuit, and which are passed around the phones by the bypass condenser C, set up high frequency flux around coil L2. The strength of this flux varies in proportion to the signal strength on the grid, which causes the pulsations in plate current. This varying flux around coil L2 induces voltage in coil L1 which will aid that induced by the antenna coil L, providing coil L2 is connected with the proper polarity. If this coil is connected wrong its flux will oppose that of coil L1, and the leads of coil L2 should be reversed.

The audio frequency variations in the plate circuit do not affect the grid voltage much by regeneration because the air core R. F. transformer coils L1 and L2 operate most effectively on high frequency. Furthermore, any slight audio frequency which might be induced in the coil L1 cannot pass through the grid condenser as it is too small to pass much energy at low frequency.

As these circuits depend on the R. F. component of the plate current for their regenerative effects the bypass condenser C is very necessary to allow this R. F. energy to flow past the impedance of the phones.

The coil L2 is often called a **tickler coil** because of its boosting effect on the voltage of coil L1 and the grid circuit. The tickler coil is often arranged so it can be adjusted with respect to coil L1, so the amount of feed-back from the plate to grid circuit can be varied by rotating or moving the tickler

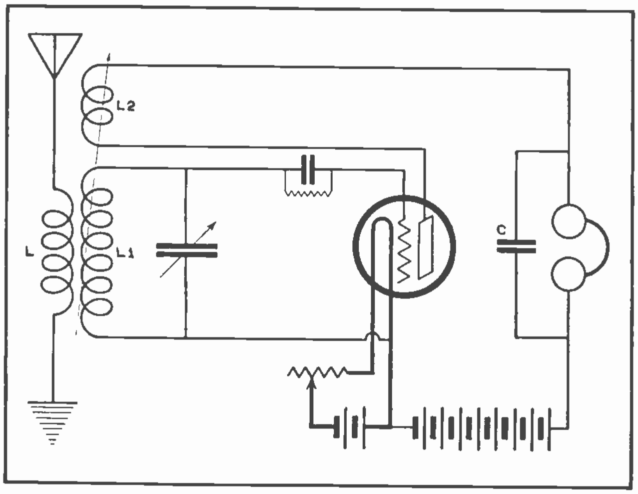

Fig. 70. This diagram shows the circuit of a regenerative detector for obtaining maximum signal strength with one tube. The tuner on the right in Fig. 69 could be used for the coils L, L1 and L2 in this figure.

closer to or farther from the grid coil. In other cases the tickler coil is fixed or stationary and a variable condenser is connected across it to control regeneration.

On the right in Fig. 69 is shown a 3 circuit tuner for use in regenerative detectors. The primary is the small coil on top, the secondary is the large stationary coil, and the movable tickler coil can be seen inside the secondary.

By using the energy fed back from the plate circuit to strengthen the signal voltages on the grid in this manner, such regenerative circuits give considerable more amplification and will receive weaker signals than a nonregenerative set.

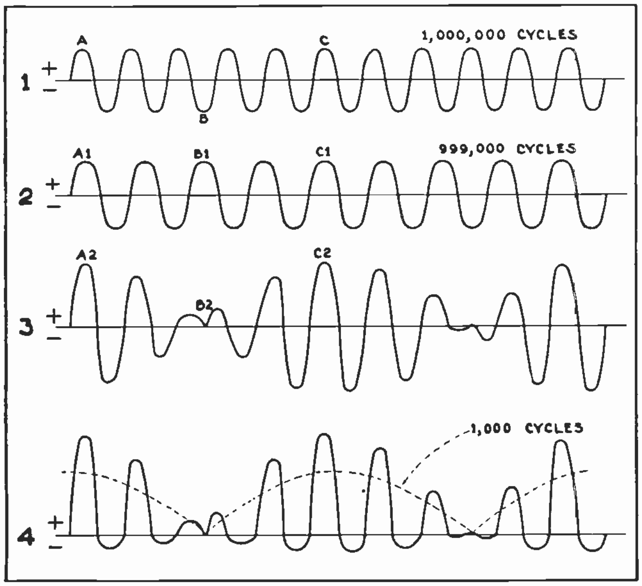

Fig. 71. The above curves illustrate the manner in which energy at two frequencies (1 and 2), can be mixed or heterodyned to produce waves of varying amplitude at 3, which result in a third frequency or beat note as shown by the dotted curve at 4.

58. OSCILLATION AND HETERODYNING OF REGENERATIVE CIRCUITS

Regenerative circuits are also useful for receiving continuous wave code signals, as these sets can be adjusted to oscillate at a frequency of their own and thus set up an audible **beat note** with the received C. W. signal.

Beat notes are produced by waves of different frequencies first aiding and then opposing each other at regular intervals and thus setting up a resulting wave of still another frequency, known as the beat note or frequency. **This beat note is always of a frequency equal to the difference between the two frequencies used to produce it.**

This mixing of two different frequencies to produce a beat note is also called **heterodyning.**

Fig. 71 illustrates the manner in which a wave of 1,000,000 cycles and one of 999,000 cycles blend together to create a beat note of 1,000 cycles.

You will note that the first waves A and A1 of number 1 and 2 sets of curves are in phase, and unite to make one larger wave A2 in number 3 set of curves. As the waves of the upper two sets progress, however, they get more and more out of phase, until at B and B1 they are in almost exact opposition to each other, or 180 degrees out of phase, and the result shown at B2 is practically zero.

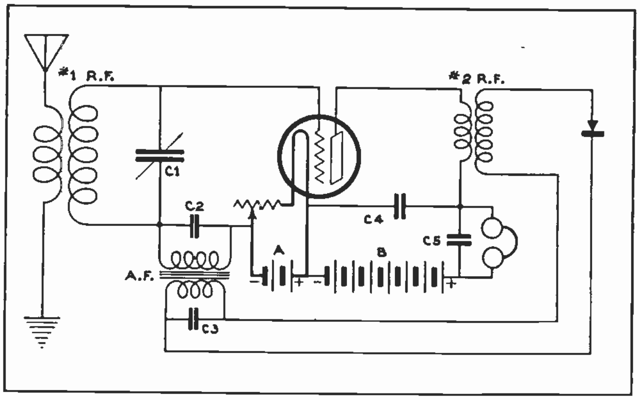

Fig. 72. Circuit diagram of a reflex receiver, in which the one vacuum tube is made to serve both as an R. F. and A. F. amplifier, and a crystal is used as the detector.

Then as the waves come nearer into phase again the resultant wave builds up greater and greater until at C and C1 where the waves of different frequency are again in phase with each other they build up to maximum value in the circuit again as shown at C2, and so on.

When the resulting wave is rectified by detector action of the tube, the result is shown at number 4, and you will note that the average value then produces a low frequency audible beat note, as shown by the dotted curves.

This same beat note principle is also used in superheterodyne receivers which will be explained later.

One of the disadvantages or objections to the use of regenerative receivers is that they often oscillate when not intended to, and set up oscillations in the antenna circuit which transmit continuous waves that heterodyne and interfere with other near by receivers.

59. REFLEX CIRCUITS

Another method of obtaining maximum results and signal strength from one tube, is by the reflex circuit shown in Fig. 72. This circuit makes the vacuum tube do double duty or serve as both an R. F. and A. F. amplifier, and uses a crystal as a detector. Or if desired, another tube can be used as the detector.

Both R. F. and A. F. currents are handled in reflex circuits by providing two paths, one of low impedance to the R. F. currents and one of low impedance to the A. F. currents. Thus the two frequencies can be separated where desired, and again mixed or handled together where desired.

We know that high inductances such as coils of

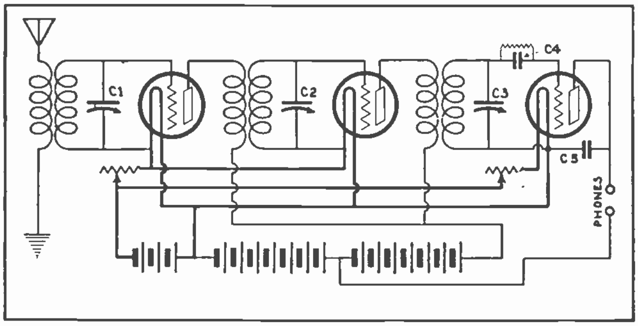

Fig. 73. Circuit diagram of a three tube receiver using two stages of R. F. (radio frequency) amplification and a detector.

iron core transformers or headphones will offer high impedance to R. F. currents, and less impedance to A. F. currents; while condensers offer more impedance to A. F. currents and less impedance to R. F. currents.

With a reflex circuit such as shown in Fig. 72, the R. F. currents in the antenna circuit and primary coil of the first R. F. transformer, induce the R. F. signal energy into the secondary of this transformer, which applies this voltage to the grid of the tube. The grid circuit is completed from this transformer secondary by a direct connection from the top of the coil to the grid, and from the bottom of the coil through the bypass condenser C2 to the filament rheostat and filament. The condenser C2 is connected across the secondary of the A. F. transformer to pass the R. F. currents by its impedance.

The tube acts as an R. F. amplifier to this incoming signal energy, and produces much stronger R. F. impulses in the plate circuit. These amplified R. F. impulses pass from the positive of the B battery through the bypass condenser C5, across the phones, and through the primary of the second R. F. transformer to the plate, returning through the tube and filament to B negative.

These strengthened R. F. impulses through the second R. F. transformer primary, induce still higher voltage in its secondary on account of the step up ratio of the transformer. This energy from the secondary is next passed through the crystal detector to bring out the audio frequency signal variations or pulsations, and this A. F. energy is passed through the primary of the A. F. transformer. This induces A. F. impulses of still higher voltage in the secondary of this step up transformer, and from the secondary they are again applied to the grid of the tube, which now acts as an audio frequency amplifier.

When these A. F. impulses are thus amplified again by the grid of the tube controlling much stronger impulses in the plate circuit, this audio frequency plate curent now passes through the phones which offer less impedance to the low frequencies than does the small bypass condenser C5.

Even though the R. F. and A. F. impulses are mixed in the tube and both being handled at once, we find this is entirely possible and practical with an ordinary amplifier tube. By use of proper bypass condensers and parts in the circuit, to prevent distortion by passing the R. F. currents around the high impedance devices, and by proper tuning adjustment, fairly clear, strong signals can be obtained with these reflex circuits.

However, reflex circuits are used very little in modern sets because the double duty placed on the tube tends to overload it and make it difficult to obtain the best tone quality in voice and music reproduction. The action in reflex circuits is really quite similar to that of regenerative circuits, except that it is audio frequency energy which is fed back through the tube.

The principles of this circuit are explained to help you understand these receivers in case you might be called on to service one, and also because some of the principles used in separating the high and low frequencies are valuable for the radio man to know.

60. RADIO FREQUENCY AMPLIFICATION

Multiple tube sets of more than 3 tubes generally use both radio frequency and audio frequency amplification. The term **radio frequency amplification** applies to all stages ahead of the detector tube, as these stages handle and amplify the incoming signal energy at radio frequency. The term **audio frequency amplification** applies to all stages following the detector, as these stages handle and amplify the rectified audio frequency energy. Fig. 73 shows a diagram of receiver using two stages of R. F. amplification and a detector. The circuit is very easy to trace and its operation is simple.

The R. F. signal energy is stepped up in voltage by the first R. F. transformer and applied to the grid of the first amplifier tube. The increased energy in the plate circuit of this tube is passed on through the second R. F. transformer to the grid of the

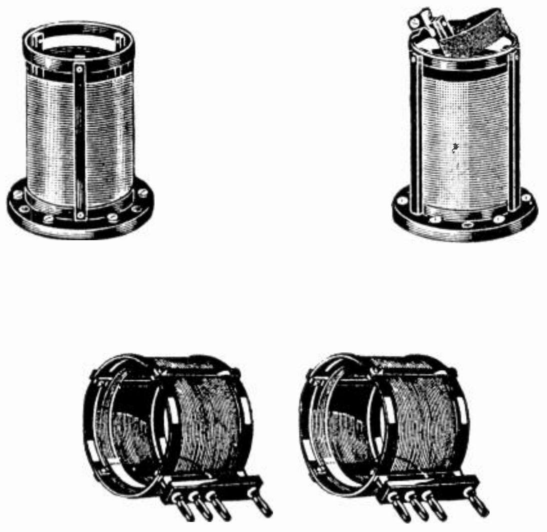

Fig. 74. Several types of R. F. coils or transformers, used for coupling R. F. stages together, or passing the signal energy from the output of one tube to the input of the next.

second tube. Here it is further amplified and applied to the grid of the detector tube, which can be easily identified by its grid leak and condenser. From the detector tube the output energy in the plate circuit is applied to the phones, and is very much stronger than if the R. F. stages had not been used.

For example if the first tube amplifies the signal about 8 times, and the second tube amplifies the output of the first 8 times again, this produces a signal 8 x 8 or 64 times as strong, without counting any amplification which may take place in the detector. Another R. F. stage would increase the signal to 8 x 64 or 512 times its original value. More than three stages of R. F. amplification are rarely used because of distortion and losses due to the leakage and capacity coupling between circuits carrying R. F. currents.

R. F. feedback due to this capacity coupling often results in severe oscillation and howling unless it is prevented by neutralizing the circuit as will be explained later, or by use of screen grid tubes and shielding as is done in later type sets.

Screen grid tubes have such low internal capacity that they do not permit any appreciable feed back through them and are therefore excellent for use in R. F. amplifier stages. If stages using screen grid tubes are properly shielded with grounded aluminum or copper partitions around and between them, objectionable feed back, oscillation, and interstage interference, can be almost entirely eliminated.

The R. F. transformers used to couple the stages of radio frequency amplifiers are generally wound with about 15 to 20 turns on the primaries and 50 to 80 turns on the secondaries, or a step up ratio of about 1 to 3½. These windings are usually wound in plain solenoid form on fibre or bakelite tubing, with the primaries and secondaries spaced a small distance apart on the same tubular form, or on two separate forms one within the other. In some cases the coils are coated with a cement like insulating compound which holds the coils in shape so the forms can be removed. Fig. 74 shows several types of R. F. transformers, and Fig. 75 shows a larger view of another type which has its primary and secondary coils arranged to provide a complete circular path for the flux through both coils.

Transformers of this type are often called air core transformers and are designed to handle R. F. currents only.

In the circuit in Fig. 73 a variable condenser is connected across the secondary of each of the R. F. transformers to tune each stage to the same frequency, as all R. F. stages should be tuned to the wave length or frequency being received, in order to obtain efficient operation and maximum signal strength.

The rotors of all of these condensers can be connected together on one shaft, or by other mechanical means so that they can be operated by one dial, and thus simplify the tuning controls. In order to do this, however, the circuits of all stages must be accurately matched in inductance and capacity. Small trimming condensers not shown in Fig. 73 are often provided and connected across the main tuning condensers to balance up slight inequalities in the circuits, in an original adjustment when the set is tested and installed. These trimmer condensers are shown by dotted lines in Fig. 76.

One advantage of R. F. amplification is that it amplifies the signals without amplifying so much, certain classes of static, audio frequency, interference and microphonic noises, which are amplified by audio frequency stages.

Note that the amplifier tubes in Fig. 73 both have their filaments controlled by one rheostat, and have full B voltage applied to their plates, while the detector has its separate filament rheostat and a lower voltage plate tap on the B battery.

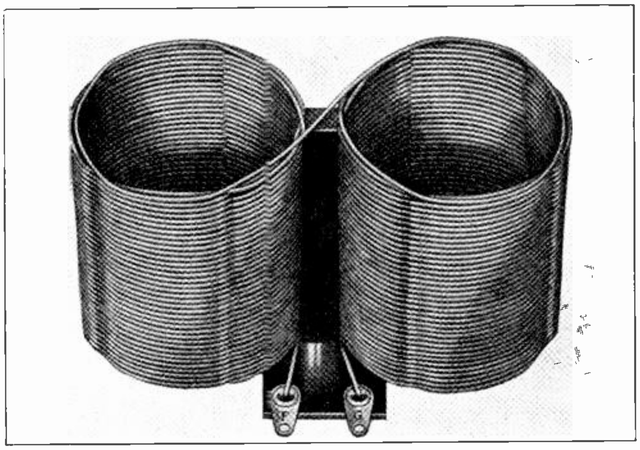

Fig. 75. R. F. transformer with self supporting coils, arranged side by side to allow the flux to take a more efficient circular path through them.

61. AUDIO FREQUENCY AMPLIFICATION

Two stages of audio frequency are very commonly used to further increase the signal energy after it leaves the detector. Fig. 76 shows a diagram of a five tube receiver with two stages of audio frequency amplification in addition to the R. F. stages and detector.

Audio frequency stages use iron core transformers for handling the low frequency pulsating D. C. currents after the detector. The straight lines between the coils in the diagram indicate iron cores in the transformers. These transformers are much more efficient than R. F. transformers, and if properly constructed they will handle the energy from stage to stage with very little distortion. A. F. transformers are wound with several thousand turns on their primaries and secondaries and with ratios of from 1 to 1 up to 1 to 6 or higher. Thus the

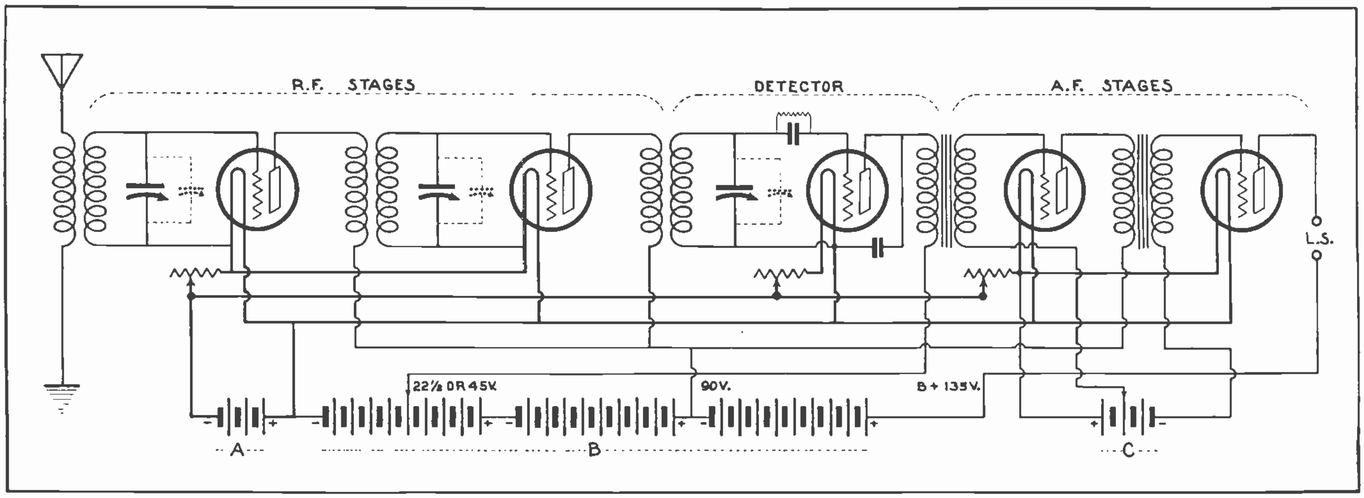

Fig. 76. Circuit diagram of a simple five tube receiver, using two stages of R. F. amplification, a detector, and two stages of A. F. (audio frequency) amplification. Study this circuit carefully as it is quite typical of thousands of receivers in use. Carefully trace the coupling circuits from stage to stage, and also the filament and plate circuits of all tubes.

transformers also aid in increasing the voltage applied to the grids of the tubes. Ratios higher than 1 to 3½ are seldom used, however, as they tend to produce distortion.

Fig. 77 shows an iron core A. F. transformer and Fig. 78 shows how the primary and secondary leads are arranged and marked for proper connection.

Good audio transformers should be designed to amplify as near equally as possible, all audio frequencies from 150 to 5000 cycles, and thus avoid distortion and produce as true reproduction as possible of the words and music. A. F. transformers of course handle frequencies from 20 to 10,000 cycles per second, but most of the notes of voice and music come in the range between 150 and 5000 cycles, so a transformer that handles these frequencies well gives good results.

Good A. F. transformers must have large enough iron cores so that the plate currents they are to handle will not saturate them. When a transformer core is saturated a further increase of current will not produce a proportional flux increase, and thus the output or secondary voltage does not vary in proportion to the primary input, and distortion results.

The primary winding of an A. F. transformer should have an impedance at least equal to that of the plate circuit of the tube to which its primary connects.

As the A. F. stages handle only low frequency currents no tuning condensers are needed. One of the reasons for A. F. transformers being of higher efficiency than R. F. transformers, is that the former use greater numbers of ampere turns in their windings, and low reluctance iron cores. These low reluctance iron cores also confine the flux to the transformer more and prevent so much leakage of stray flux.

There is some leakage of flux around A. F. transformers, however, and to prevent interference from it they should be spaced 4 or 5 inches apart or turned with their cores at right angles to each other. A. F. transformers often have thin metal shields around their cores and windings, and those which do not generally have shielding placed between them in the set to minimize inductive interference.

It is possible to obtain an increase of 400 times in signal strength with the amplification of the tubes and step up ratios of the transformers in two stages of A. F. amplification.

The arrangement of the audio frequency amplifier stages shown in Fig. 76 is known as a **cascade** connection, because of the manner in which the energy passes on through one stage after another.

More than two stages of A. F. amplification are

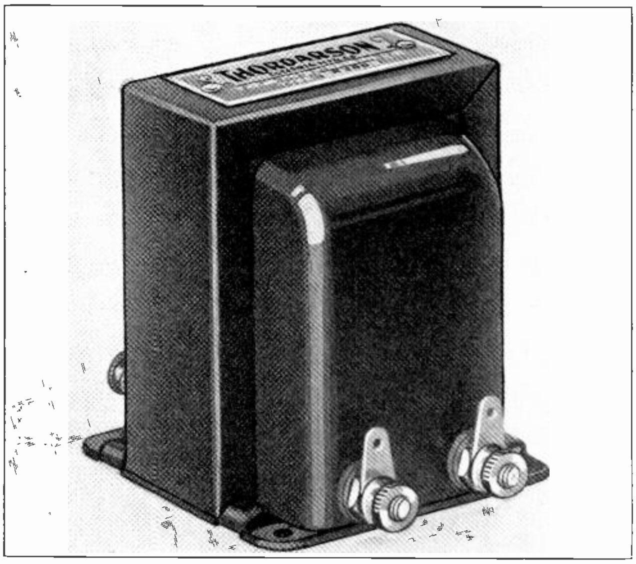

Fig. 77. Photo of a common type of iron-core audio frequency transformer, with a metal case or shield enclosing the core and coils. Transformers of this type are used for coupling between A. F. amplifier stages. (Photo courtesy of Thordarson Electric Mfg. Co.)

seldom used on account of increasing distortion with greater numbers of stages. Another reason for limiting the number of stages of amplification in a receiver, is that when currents of very large value are built up in the wires and leads of the set it is difficult to keep the fluxes around these conductors from interfering and inducing out of phase voltages in other conductors and thus causing distortion and losses.

62. A. F. TRANSFORMER AND AMPLIFIER CONNECTIONS

In Fig. 78 you will note that the outer lead on the secondary coil is marked G for connection to the grid of the tube which this secondary feeds. It is very important to get this proper lead connected to the grid, because the inner lead is closer to the grounded transformer core and thus is more closely coupled to the core and ground by capacity. As the grid of a tube is fundamentally a voltage operated device, we should use the transformer lead which is farthest removed and at highest potential from ground. This lead to the grid should also be kept as short as possible.

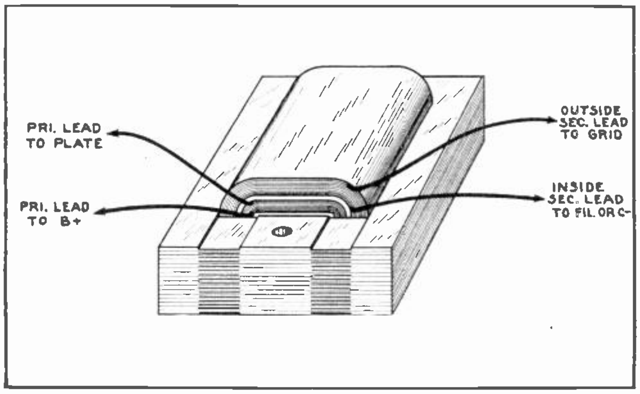

Fig. 78. This sketch shows the common arrangement of the primary and secondary coils and leads of A. F. transformers, and also shows the manner in which these leads should connect to the other devices in the circuit.

The other secondary lead F, should connect to filament terminal or to the negative terminal of the C battery when one is used. Note the C battery connections to the grids of the two tubes in the A. F. stages in Fig. 76. The primary terminals P and B+ are connected to the plate of the tube and to the positive terminal to the B battery respectively.

The primary and secondary leads of most A. F. transformers are marked as described above and as shown in Fig. 78, to make it convenient to connect them properly.

In Fig. 76 you will note again that the detector tube is supplied with lower plate voltage than the amplifier tubes, in order not to overload the detector tube and cause distortion. You will recall that the use of proper voltage on the detector works it at the proper point on its plate current curve to give maximum rectification and best detector action. In some later type sets, however, a form of detection called **power detection** is used, and higher voltages are used on the detector tubes by using the proper negative bias on the grid. This bias is obtained from a "C" battery or from the voltage drop in a resistor in the circuit.

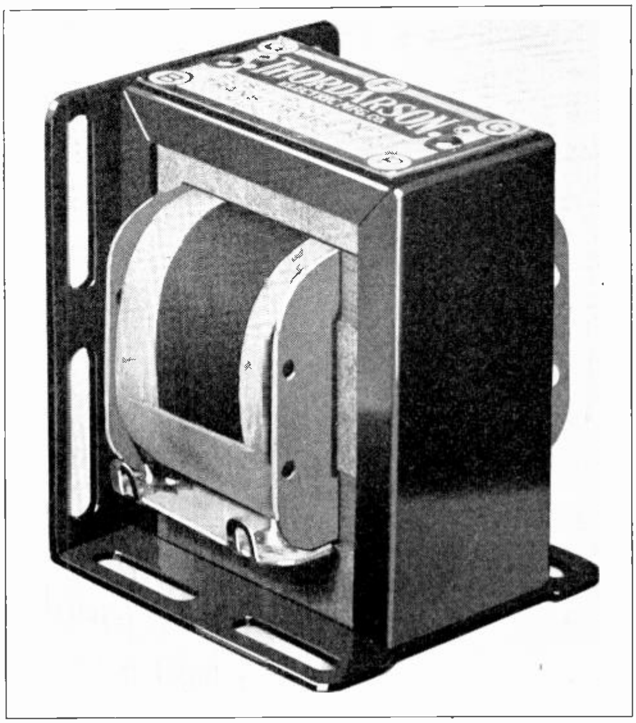

Fig. 79. Audio frequency transformer with sides of metal shield removed to show insulation around coils. This unit is equipped with brackets and slots for convenient mounting either on a horizontal or vertical panel. (Photo courtesy of Thordarson Electric Mfg. Co.)

In Fig. 76 you will note that the plates of R. F. amplifier tubes use voltage somewhat higher than that on the detector tube, and that the A. F. tubes can use still higher voltage without overloading, because of the C battery negative bias used on their grids. The proper plate voltages and grid bias voltages for various detector and amplifier tubes are given in the tube characteristics chart in Fig. 65.

63. PUSH PULL AMPLIFICATION

The five tube circuit shown in Fig. 76 will ordinarily give plenty of amplification and power output to operate a loud speaker, on signals from powerful stations or stations not too far distant.

When it is desired to operate a loud speaker with considerable volume it may require more power from the receiver than can be handled without distortion by a single ordinary amplifier tube, such as used in the last stages of the circuit in Fig 76

In order to obtain increased volume and improved quality two amplifier tubes can be connected in a sort of parallel arrangement in the last stage, as shown in Fig. 80. This arrangement is called a **Push-Pull** amplifier connection.

By examining Fig. 80 you will find that a push-pull amplifier stage makes use of audio frequency transformers with center taps on their windings. The secondary of the input transformer feeding the push-pull tubes is tapped, and the primary of the output transformer which couples the set to the loud speaker is tapped. The center tap on the secondary of transformer number two connects to the filaments of both tubes, providing a filament return circuit for both grids which are connected to opposite ends of this transformer secondary. A "C" battery can be connected in the grid return lead at X to bias the grids if desired.

With the grids connected in this manner when alternating voltage is induced in the secondary of number two transformer, first one grid is positive and the other negative, and then the other grid becomes positive and the first one negative. Thus each tube handles one half of every cycle, or handles every other alternation.

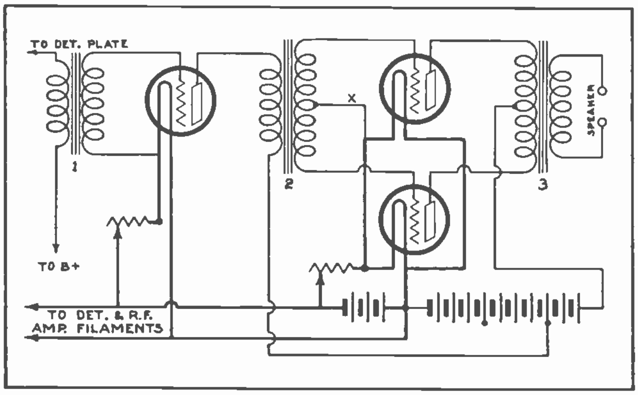

Fig. 80. Diagram showing the connections of a push-pull amplifier, using two tubes in the last stage, to increase the volume and improve the quality of the set.

The positive lead from the "B" battery connects to the center tap of the output transformer primary, and the ends of this split primary connect to the plates of the tubes as shown.

With the grid of first one tube and then the other becoming negative at alternate intervals, the "B" battery feeds current first to one plate and then the other, thus supplying two full plate current impulses to the primary of the output transformer during each cycle. These alternate impulses are in opposite directions through the two halves of the split primary, however, and thus cause a much greater voltage and flux change in this winding than the mere rise and fall of the plate current of a single tube would. Thus the output of both tubes is combined in the primary of the output transformer to deliver greatly increased energy from its secondary to the loud speaker.

Two stages of push-pull amplification, often called **double push-pull**, are sometimes used, and in such circuits a push-pull interstage transformer with center taps on both primary and secondary is used.

Push-pull amplification with the small amplifier tubes is not used so much in modern receivers any more, because the development of power tubes with much greater output capacity has made it unnecessary. But even power tubes are often connected push-pull in the last one or two stages of heavy duty power amplifiers, used for operating large speakers in public address and theatre installations where great volume is needed to carry the sound throughout a large hall or auditorium.

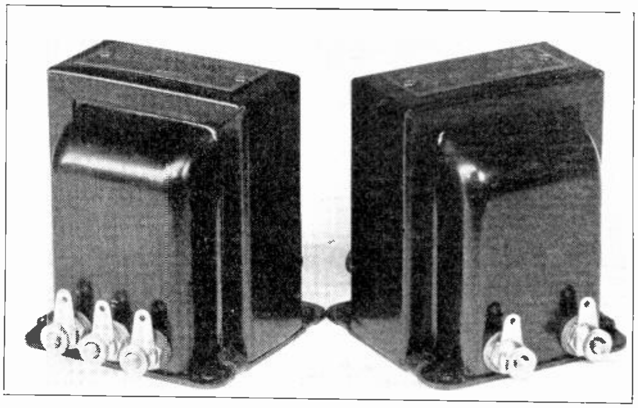

Fig. 81. Photo showing opposite sides of two push-pull A. F. transformers. Note the three terminals on the side with the center-tapped coil. (Photo courtesy of Thordarson Electric Mfg. Co.)

Fig 81 is a photo of two push-pull transformers with their opposite sides shown in this view. Note the three terminals from the winding with the center tap.

Fig 82 shows a photo of a complete audio frequency amplifier using two number 210 power tubes in push-pull in the last stage, fed by a 227. The 281 sockets are for half-wave rectifier tubes for the power unit. Note the push-pull transformers on the right near the panel or terminal board, and the smaller A. F. transformers to the left.

The sockets and wiring can be clearly seen in this photo, and you will also note the power supply transformer, condenser and choke coil, which will be explained a little later.

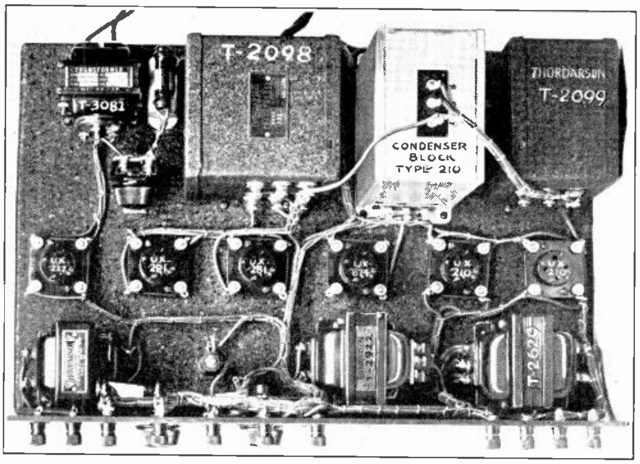

Fig. 82. This photograph shows the wiring and arrangement of parts in a complete power amplifier, without the tubes. Two number "210" power tubes are used in push-pull in the last stage of this amplifier. It also contains its own power supply unit. (Photo courtesy of Thordarson Electric Mfg. Co.)

64. POWER AMPLIFICATION

We have already referred to the use of power tubes where great volume of sound is desired from loud speakers, and some of the figures in the section on vacuum tubes showed tubes of this type. The chart on tube characteristics in Fig. 65 also gives the complete data on various power tubes. Power amplification simply means using power tubes of the proper size in the final stage or the stages of audio frequency amplifiers. The circuits and connections are practically the same as those of the straight audio or cascade, and push-pull amplifiers already shown, except that higher plate voltages and negative grid bias voltages are used on the power tubes. The voltage and current required by their filaments is also a little different, so separate filament resistors are used for power tubes.

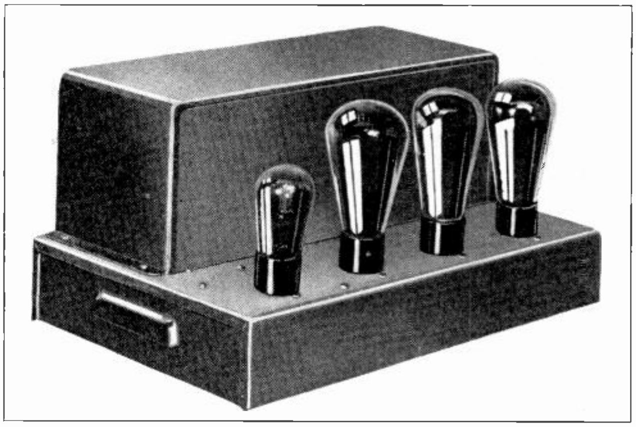

Fig. 83. Photo of a neat and compact power amplifier which can be connected to the output of an ordinary receiver, an electric pickup on a phonograph, or to a microphone of a public address system, and will supply power enough to operate large loudspeakers. (Photo courtesy of Thordarson Electric Mfg. Co.)

Even where the sound volume requirements of a receiver or amplifier are not so great, one stage of moderate power amplification is often used to provide plenty of undistorted power to faithfully reproduce all notes of voice and music, and thus obtain much better tone quality in the reproduced sound.

The heavy bass notes of music require much more energy to fully reproduce with a loud speaker diaphragm than the higher pitched notes do, and the recent development of power tubes and amplifiers has greatly improved the tone quality of radio sets and speech amplification equipment such as used in talking picture installation and public address systems.

As a comparison of the greater amount of power available from power tubes, the ordinary 201-A or 301-A tube has a maximum undistorted plate power output of about 55 milli-watts, as compared with 5 to 7 watts output for some of the modern power tubes. This you will note is about 91 times as much power output from the large tube, and you can readily understand what an improvement in tone quality, and increase in sound volume this should make possible.

Fig. 83 shows a complete modern power amplifier designed for use where great volume is required. This amplifier can be connected to the output of an ordinary radio receiver, to a microphone or electric phonograph pick-up, or to the pre-amplifier from the sound head of a talking picture machine, and can be used to amplify the audio frequency energy to a point where it will operate very large speakers and fill a large room or hall with sound.

This particular type of amplifier is so constructed that several of them can be connected in parallel to give as great volume as required for most any purpose.

65. VOLUME CONTROL

Where radio sets have considerable reserve capacity it is very desirable to have some form of volume control to prevent excessive sound, or "blasting" of the speaker when receiving nearby stations.

Sometimes the volume is controlled by adjusting the filament rheostat of the detector tube, but this is not such good practice and the detector filament rheostat should only be used to adjust the filament temperature of this tube to a point where the signal is clearest and best. On modern A. C. receivers no detector filament rheostat is provided, but they are in use on most older type battery operated sets.

When a filament rheostat is used for volume control its principle of operation is easily understood. Increasing the resistance in series with the filament decreases the filament current and temperature, thereby reducing the electron emission and amount of plate current flow.

Some receivers use a potentiometer or variable high resistance of 100,000 ohms or more, connected

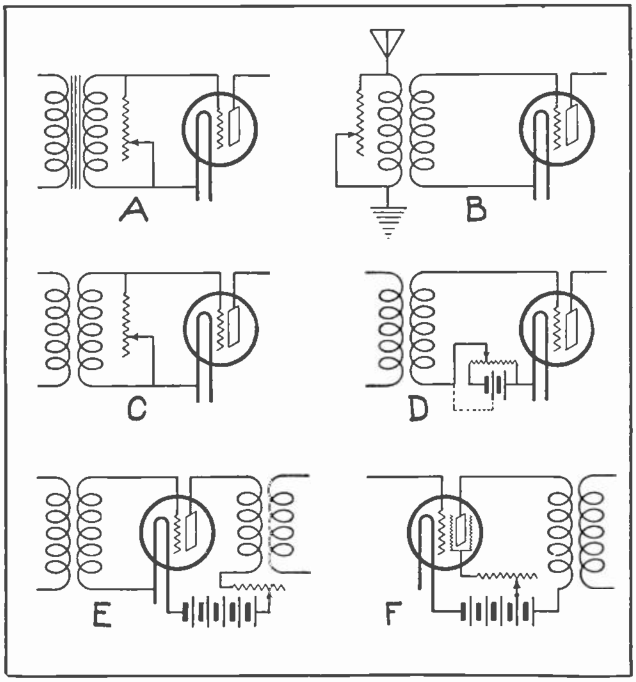

Fig. 84. The above sketches show six different methods of obtaining volume control in the R. F. or A. F. stages of radio receivers and amplifiers.

across the secondary of the first A. F. transformer to control the volume of the set. When the resistance of the potentiometer is reduced it simply shunts part of the energy from the transformer secondary away from the grid of the first A. F. amplifier tube. and thereby reduces the voltage applied to that grid. This in turn reduces the output of that tube and results in less energy and amplification in the remaining stages, and less volume at the speaker. This method of volume control is shown at A in Fig. 84.

Some receivers obtain their volume control in the R.F. stages, by use of potentiometers of several hundred thousand ohms resistance, shunted either across the primary of the first R. F. transformer or across the secondary of one or more of the R. F. interstage transformers, as shown at B and C in Fig. 84.

Any of these methods simply cause a loss of part of the signal energy through the potentiometer resistance, and thus reduce the energy in the circuits and stages from that point on throughout the set.

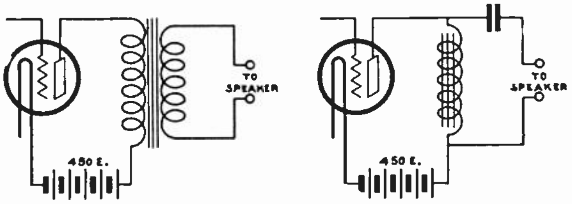

Fig. 85. The sketch on the left shows the transformer method of coupling a loudspeaker to the output or plate circuit of the last tube. On the right is shown the impedance method of speaker coupling.

Volume control can also be obtained by varying the amount of negative bias on any of the tubes, by means of an adjustable resistance across the C battery, or by variable voltage taps on the C battery or negative bias supply. See Fig. 84-D.

Some older type receivers use potentiometers in series with the plate circuits of one or more R. F. tubes, to reduce the plate voltages applied to these tubes, and thereby reduce their output. See Fig. 84-E.

Modern A. C. receivers with screen grid tubes frequently use potentiometers in series with the leads from the B battery or D. C. supply to the screen grids of these tubes. Varying the positive potential of these screen grids varies the space charge and electron flow as previously explained, and thereby controls the plate current and power output of the tubes. This method of volume control is illustrated for one tube in the sketch in Fig. 84-F.

It is easy for one with a knowledge of vacuum tube and amplifier principles to understand how any of these methods explained will effect volume control.

Volume control in the R. F. stages or first audio stage is generally considered to be better than in the last audio stages, because if the volume is reduced in the R. F. stages it prevents overloading of the detector and audio amplifier tubes. There is very little possibility of R. F. tubes ever becoming overloaded when supplied with proper voltages, because the signal energy is too small until after it has been amplified by several stages.

Some radio receivers are equipped with switches for cutting out one or more R. F. or A. F. stages, or with jacks to enable the speaker to be plugged in ahead of the last one or two A. F. stages in order to operate at lower volume.

66. LOUD SPEAKER COUPLING

The armature coils of loud speakers are not usually designed to operate on voltages above 180 volts, and as large power tubes are designed to operate with plate voltages from 135 to 450 volts, some form of transformer coupling must be provided to reduce this output voltage to the speaker.

One of the most common forms of loud speaker coupling is a simple output transformer or audio transformer of 1 to 1 ratio, connected as shown on the left in Fig. 85.

At first thought it might seem that a 1 to 1 ratio transformer would not reduce the voltage applied to the speaker. However, we can readily see that if the speaker armature were connected directly in the plate circuit in place of the coupling transformer primary, it would have the full 450 volt potential applied to its end attached to the positive B supply lead.

With the speaker connected to the secondary of the output transformer it will only receive that voltage which is induced in the secondary winding. The voltage induced in the secondary of a transformer depends upon the amount of voltage drop across its primary and the rate at which the primary voltage and current change.

Only part of the plate voltage drop occurs across the primary of the output transformer, and the rest occurs in the plate circuit resistance inside the tube. Furthermore, as the plate current is pulsating D. C. and never falls clear to zero as long as the tube is operating, we do not have 100% change of maximum plate current during any pulsation or cycle. Therefore, the voltage induced in the secondary and applied to the speaker coil is considerably less than half of the full plate voltage.

Most loud speakers are so designed that they will operate best when used with transformers of a certain impedance, so the impedance of the output transformer should be matched to the design of speaker used. Many loud speakers are built with their coupling transformers attached directly to the speaker base and furnished as a part of the speaker.

Another method of coupling loud speakers to the output of amplifiers is the choke or **impedance** method illustrated on the right in Fig. 85.

Here a large condenser of 4 to 8 M. F. capacity is connected in series with one lead to the speaker, and the speaker leads then connected across a choke coil which is in series with the plate circuit of the last tube.

The amount of voltage and current supplied to the speaker depends upon the voltage drop across the choke coil and the charging current drawn by the condenser. As the condenser charging current depends upon the voltage drop across the choke coil, and this voltage drop in turn depends on the variations of plate current through the choke, the speaker armature and diaphragm will vibrate in proportion to the plate current pulsations and reproduce the sound accordingly.

Another very important reason for using some form of coupling between the plate circuits of the tubes and certain types of speakers, is to get sufficient impedance in the plate circuits. The impedance of the operating coils in many loud speakers is not enough to make efficient use of the plate circuit energy, but the impedance of the primary of an iron core coupling transformer, or the coil of a coupling impedance can be made high enough to match the impedance of the plate circuit.

67. RESISTANCE COUPLED AMPLIFIERS

The amplifiers we have so far explained have been of the transformer coupled type. Another form of coupling used in some amplifiers is known as **resistance coupling.** Resistance coupled amplifiers are often used for short wave receivers and in television equipment, and sometimes in audio frequency stages of ordinary receivers where absolute freedom from all distortion is desired.

One advantage of resistance coupled amplification is that there are no inductance coils nor iron cores in its circuits to set up magnetic induction or eddy currents, which might cause slight distortion and which would offer extremely high impedance to the very high frequencies of short wave signals.

Fig. 86 shows a diagram of a detector and three stage resistance coulped amplifier. The R. F. stages are not shown in this diagram. Resistance coupled amplification is not often used in R. F. stages.

The principle of operation of this method of coupling is as follows. When signal energy is applied to the grid of the detector tube in Fig. 86, it causes pulsations or variations in the plate current in the usual manner.

Instead of a transformer primary in this plate circuit we now have a fixed resistance R1, of about 100,000 ohms. You have already learned that the voltage drop through any resistor is proportional to the resistance in ohms and to the current in amperes. The resistance in this case remains constant but as the plate current varies through resistor R1 the voltage drop across it varies proportionately.

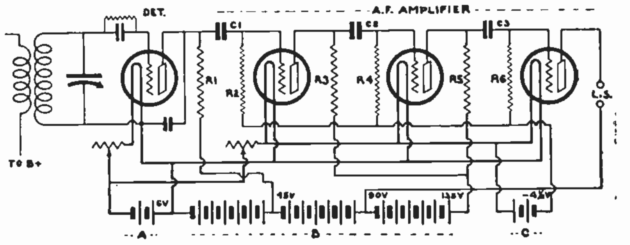

Fig. 86. Circuit diagram of a detector and three-stage resistance coupled amplifier. Carefully study the principles of this circuit with the accompanying explanations.

This varying voltage drop across resistor R1 causes corresponding variations in the positive voltage applied to the condenser C1, which is connected between the plate of the detector tube and the grid of the first A. F. amplifier tube. The varying positive potential applied to the plate of this condenser, which connects to resistor R1 and the plate of the detector, causes a varying negative potential to be induced on its opposite plate which connects to the grid of the first A. F. amplifier tube.

You will recall from material in an earlier section of this reference set that when one plate of a condenser has voltage of a certain polarity applied to it, the other plate always takes on an electro-statically induced charge of opposite polarity.

The varying negative potential thus induced on the right hand plate of this condenser C1 is applied to the grid of the first A. F. amplifier tube. This causes pulsations of increased strength in the plate circuit of that tube and through resistor R3, which in turn changes the voltage applied to condenser C2 and the grid of the next amplifier tube, etc.

The condensers are necessary between the plates and grids of successive tubes to prevent the positive "B" potential from being applied to the grids.

The resistors R2, R4, and R6 are merely grid leak resistors to drain away excessive negative charges which would otherwise be stored up on the grids by the blocking affects of the condensers which are in the normal grid return leads. In transformer coupled sets this negative charge can leak off through the secondaries of the transformers and back to the filaments.

The coupling resistors R1, R3, and R5 are all of the same size and usually of about 100,000 ohms regardless of the number of stages. The leak resistors vary in size, however, getting lower as the stages progress and the signal strength and grid voltages increase. For three stages of resistance coupled amplification these leaks are generally of 1 megohm for R2 or the first stage, ½ megohm for R4 or the second stage, and ¼ megohm for R6 or the third stage.

The size or capacity of the coupling condenser is not very critical, ranging from .01 to 1.0 mfd., a very commonly used size being the .1 mfd. condenser.

Fig. 87 shows several types of condensers such as are commonly used for coupling purposes and also for by-pass and other uses in radio sets. Some of these condensers are made with flat sheets of tin foil and mica pressed together and moulded in bakelite or hard insulating compound, after the alternate

Fig. 87. Above are shown several types of fixed condensers used for coupling radio circuits and for bypassing certain frequencies around some of the inductive or high resistance devices in the circuits. (Photo courtesy of Aerovox Wireless Corp.)

foil strips are equipped with projecting terminals or connector lugs which project out through the insulation. Others of these condensers are made with waxed or oiled paper insulation between the foil, and are either of flat pressed or rolled construction, and then the entire element enclosed in a moisture proof metal case which is filled with oil or wax.

Fig. 88 shows several types of resistors which are used for coupling resistors in the plate circuits of resistance coupled amplifiers, for grid leaks, and other purposes in radio receivers and amplifiers. Note that most of these resistors are made in a sort of cartridge unit or tubular form for convenient mounting in spring clips in the set. This enables them to be easily and quickly changed or replaced with resistors of different values when necessary. At the lower left in Fig. 88 is shown a base and the spring clips for mounting a single resistor unit, and at the lower right in this same figure two resistor units are shown in the clips of a double unit mounting.

In some cases condensers are equipped with these spring clips attached to them so the resistors and condensers can be mounted and connected as a unit, thus saving space and wire.

On account of the voltage drop in the plate circuit resistors it is necessary to use somewhat higher B battery voltages to get the proper voltage applied to the plates. Resistance coupled amplifiers generally require about 135 to 150 volts plate supply instead of 67 to 90 as in ordinary transformer coupled amplifiers. One of the disadvantages of resistance coupled amplifiers is their inefficiency due to the losses occurring in the plate circuit resistor.

Where several stages of resistance coupling are used for audio frequency amplification, as in Fig. 86, the voltage applied to the plate of the last tube is generally somewhat lower than that used on the other stages, as the last stage has no resistor in its plate circuit to cause any voltage drop, and the coils of the loudspeaker have only a small amount of resistance as compared with the regular plate circuit resistors.

Some radio sets use just one or two stages of resistance coupled amplification with one or more stages of transformer coupled amplification. In some cases where little or no R. F. amplification is used the first stage of A. F. amplification is transformer coupled, because the plate current of the detector tube is likely to be so small on weak signals that it would not cause sufficient voltage drop in a coupling resistor if such were used in the first stage.

68. IMPEDANCE COUPLING

Some amplifiers use impedance coupling which is very similar to resistance coupling except that an impedance or choke coil is used instead of a resistor in the plate circuit of each tube.

If the resistors R1, R3, and R5, in Fig. 86 were replaced by iron core choke coils, we would then have a circuit for a detector and three stage impedance coupled amplifier. The diagram of impedance coupling for loudspeakers which was shown on the right in Fig. 85, shows an iron core choke coil or impedance of the type used in impedance coupled amplifiers. These coils are also often called **plate reactors.**

The coupling condensers and grid leaks in impedance coupled amplifiers are the same as with resistance coupled amplifiers. The operating principles of the two types of amplifiers are fundamentally the same. With an impedance or plate reactor of the proper value in the plate circuit of an amplifier tube, the plate current will flow through it quite freely but the varying flux due to plate cur-

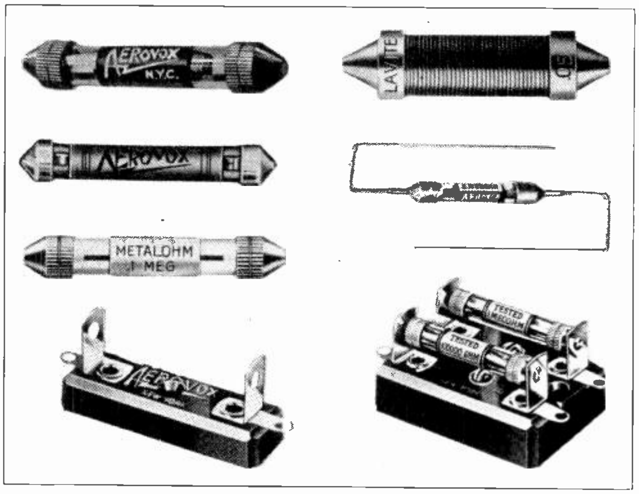

Fig. 88. Photos of several styles of fixed resistor units and mountings, for use in resistance coupled amplifiers, and for grid leaks, and other purposes in radio receivers. (Photo courtesy of Aerovox Wireless Corp.)

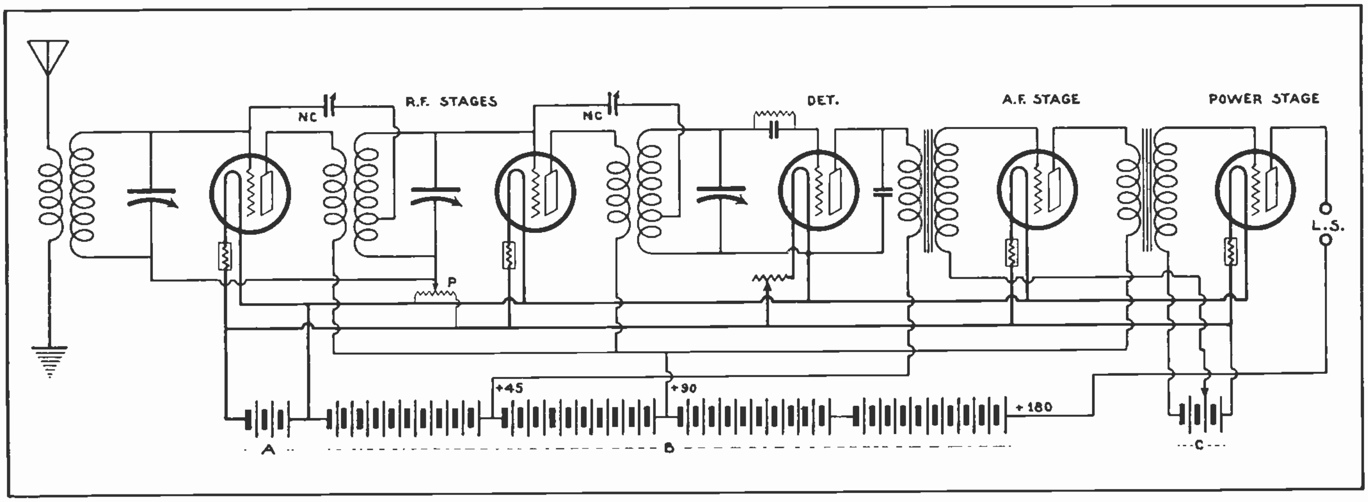

Fig. 89. Circuit diagram of a five tube neutrodyne receiver. Note the two neutralizing condensers N. C. connected across the R. F. amplifier tubes for balancing out the effect of the tube capacity. Also note the tapped secondaries of the special R. F. transformers or "neutroformers", to which one lead from each neutralizing condenser connects.

rent pulsations will induce counter E. M. F. in the coil. The voltage drop due to this impedance or counter E. M. F. varies the voltage applied to the coupling condenser and to the grid of the following tube, etc.

In order to develop sufficient voltage drop with the low frequency currents or pulsations in audio frequency stages, the plate reactors or impedance coils must be of the iron core type. In radio frequency stages, however, air core impedance coils can be used and will develop sufficient counter E. M. F. and voltage drop due to the high frequency energy passed through them.

The inductance of the choke coils used in the plate circuits of impedance coupled amplifiers varies from 100 to 300 henries, and their impedance from 20,000 to 60,000 ohms, according to the types of tubes used and their location in the amplifier. The impedance of these coils is generally quite high with respect to that of the plate circuit of the tube, often from 3 to 5 times as high in ohms as the A. C. resistance or impedance of the plate circuit in which the coil is connected.

69. NEUTRODYNE CIRCUITS AND NEUTRALIZING

In earlier paragraphs we mentioned the necessity of neutralizing or balancing out the capacity between tube electrodes and leads to prevent oscillation and feed back in R. F. stages. There are several different methods of accomplishing this but they all work on about the same general principle of supplying a small capacity or condenser outside the tube to balance that within the tube itself, and also that of its terminals and wiring.

One of the methods which has been very commonly used in earlier makes of battery operated sets, is shown in the R. F. stages of the circuit in Fig. 89. This circuit is commonly known as the Neutrodyne circuit and was very popular a few years back.

Screen grid tubes have now made neutralizing of this type unnecessary in modern receivers, but there are thousands of neutrodyne sets still in use, and it will be well for any radio service man to have an understanding of their principles and adjustment.

In Fig. 89 you will note the two small neutralizing condensers connected from the grid to the output transformer secondary of each R. F. stage. These condensers and the specially tapped secondaries of the R. F. transformers to which they attach are about the only differences between this neutrodyne circuit and an ordinary five tube set with two R. F. stages, detector, and two stages of audio frequency amplification.

The principle of this neutrodyne circuit or of neutralizing undesirable tube capacity in any R. F. amplifier is as follows: First we know that the feedback and oscillation troubles which often occur in R. F. stages without screen grid tubes, are caused by energy feeding back through capacity from the plate to the grid. This changes the grid potential, and causes another surge of plate current which again imparts a potential change to the grid by capacity, and thus sets up oscillation or a continuous repetition of this action.

Now if we connect a small external condenser of just the right size, from the plate circuit back to the grid of the same tube, and in such a manner that it will always supply voltage of opposite polarity to that applied to the grid by plate capacity within the tube, the two voltages should balance or neutralize and destroy each other. That is just what happens with the connections shown in Fig. 89 if the condensers NC and NC1 are of the proper size.

One plate of the neutralizing condenser N C connects to the grid of the tube, and the other plate connects to a point on the secondary of the output transformer where it obtains a small voltage of opposite polarity to that supplied to the plate through the primary. Therefore, the charge imparted to the grid through condenser N C is just opposite to that supplied by capacity from the plate, and the two neutralize and cancel each other thus preventing any change of grid potential from either source and thereby eliminating objectionable oscillation.

Of course the capacity of NC and NC1 must be just right to balance that between the respective tube elements, and as the capacity of different tubes usually varies a little, these neutralizing condensers are adjustable so they can be set at the proper values to match the tubes they are used with. Their capacity is only very small and generally ranges from one to thirty m.m.f. (micro-microfarads).

These little condensers are of various construction, some being merely two pieces of stiff wire pushed into a fibre or glass insulating tube until their ends nearly meet, and with a metal sleeve placed over the outside of the insulating sleeve. In this type the capacity effect between the wires and the outer metal sleeve creates two small condensers in series. Such neutralizing condensers can be adjusted by sliding the sleeve back and forth on the wire ends, but of course never allowing the wire ends to touch each other.

Some neutralizing condensers consist of two small flat strips of metal separated by insulation, and have a screw adjustment for moving one of these plates closer to or farther from the other. For adjusting this type a screw driver made of bakelite or some such insulating material should be used, in order to avoid the effect of body capacity which would be conveyed through the metal of an ordinary screw driver to the condenser.

Some neutralizing condensers are of the single plate rotary or variable type, made in a very small size known as midget condensers.

70. NEUTRALIZING PROCEDURE

To adjust the neutralizing condensers in a receiver, proceed as follows: First tune the receiver to some local or nearby station and adjust the tuning dials and rheostats to the point of greatest undistorted volume.

Then remove the first R.F. amplifier tube and wrap a piece of thin but tough waxed tissue paper around its filament prongs, so the filament will not light when the tube is replaced. (The filament prongs are always the two large ones).

With the tube back in place in its socket but with its filament not heated, again adjust the receiver to the point of greatest volume, and the signal now heard will be coming through this tube by capacity coupling.

Next adjust the neutralizing condenser of this tube until the signal disappears or is brought to the lowest volume possible by this adjustment.

Then remove the paper from the tube prongs and put this tube back in service and proceed in the same manner on each of the remaining R.F. tubes.

In some cases it is not possible to make the signals completely disappear when neutralizing a tube, because of inductive and capacity coupling between wiring and parts of the set.

It is more desirable when possible to use a modulated oscillator to excite a receiver during neutralizing adjustments, instead of tuning it to some station. A modulated oscillator is simply a portable oscillator set which is constructed to give off a continuous wave which is modulated at an audible frequency. When such an oscillator is placed near the antenna of the receiver to be neutralized, the receiver will deliver a note of constant value which is much better than ordinary music when making adjustments on the set.

Instead of wrapping the tube filament prongs with paper, a tube of the same type with one filament prong cut off close to the base is often used to replace the other tubes one at a time while neutralizing each stage.

The potentiometer P in Fig. 89 is connected across the filament supply leads and used to obtain the proper negative bias for the R.F. tubes, by connecting their return leads to the sliding arm of this resistance. A "C" battery is used to get the negative bias for the first audio tube and the power tube in the last stage.

The detector tube in this circuit has a filament rheostat but the filament circuits of all the amplifier tubes are equipped with fixed resistor units called ballast resistors or **Amperites,** which are of the proper resistance for each tube.

71. SUPERHETERODYNE RECEIVERS

We have previously mentioned that it is generally not practical to use more than two or three stages of either radio frequency or audio frequency amplification in an ordinary radio receiver, on account of the losses and oscillation in R.F. stages and the distortion in A.F. stages.

A very popular type of receiver which makes possible several more stages of amplification is known as the **Superheterodyne.**

Superheterodyne receivers use an oscillator tube and circuit to set up a continuous wave of their own, which heterodyne or mixes with the incoming signal to produce a beat note of the proper **intermediate frequency** for efficient amplification through as many as five or more intermediate stages.

Then the amplified energy is passed through a detector tube and two or more stages of audio frequency amplification.

The purpose of using the intermediate frequency energy in a superheterodyne receiver is to be able to handle a lower frequency than the ordinary R.F. carrier waves, and one which therefore does not have so much of the high frequency capacity effects and losses; and yet a frequency higher than audio frequency and which does not need to be handled through transformers with large iron cores that cause distortion.

It is possible to design intermediate frequency transformers which will amplify very efficiently only certain frequencies within a very narrow band. These transformers are tuned so sharply by use of just the right number of turns and by connecting small fixed condensers across them, that they will not pass any other frequencies through.

Intermediate transformers can be designed for frequencies from about 20,000 to 120,000 cycles, but the intermediate transformers for any certain receiver are often designed to handle or pass only waves within a band of 10 kilocycles (10,000 cycles), somewhere within the above mentioned range.

Superheterodyne receivers can therefore be made with extreme selectivity or sharpness of tuning, which is another of their advantages.

The intermediate frequencies used in most modern superheterodyne receivers are around 175 to 180 kilocycles, or a wave length of about 1666 to 1715. The Atwater Kent receivers use a 130 K. C. intermediate frequency and some older sets use 100 K. C.

Some intermediate transformers are of the air core type, while some have small iron cores. Some superheterodyne sets have some of each type in their intermediate stages.

Fig. 90 shows a simple seven tube superheterodyne circuit. The tubes in the circuit are numbered, number one being the oscillator which sets up the wave to mix with the signal wave. Number two is the mixer, "frequency changer", or **first detector** as it is more commonly called, and is where the two frequencies are mixed into the intermediate frequency. Three and four are I.F. or intermediate frequency amplifiers. Five is the second detector or actual detector performing the rectification and change from I.F. to A.F. Tubes six and seven are ordinary A.F. amplifiers.

The intermediate frequency transformers are shown with just one line between their coils.

The circuit of the first detector is provided with a variable condenser to enable it to be tuned to the desired station or signal wave length. The oscillator circuit also has a tuning condenser so it can be adjusted to produce any desired frequency.

As the intermediate transformers are designed to handle only one certain frequency and their tuning is never changed, we must be able to adjust the oscillator to produce a different frequency for each different signal frequency or wave length received, in order to maintain the same intermediate frequency at all tunes.

In operating a superheterodyne receiver the first detector circuit is tuned to the wave length of the desired station, and the oscillator is then tuned to produce a frequency that will mix with the incoming signal to produce a beat note of the proper intermediate frequency. The energy from the oscillator circuit is transferred to the first detector circuit by induction between coil 2 in the oscillator plate circuit and coil 3 in the detector grid circuit. As previously mentioned the beat note or intermediate frequency will always be equal to the difference between that of the incoming signal and that produced by the oscillator.

For example if the frequency of the incoming signal is 1,000,000 cycles, and the oscillator produces a frequency of 950,000 cycles the beat note or intermediate frequency will be 50,000 cycles.

When the signal energy and that from the oscillator are mixed together in the first detector circuit the beat note produced has the audio frequency signal variation from the antenna coil impressed on it, and this is carried through the intermediate stages, greatly amplified, and then separated at the second detector and further amplified by the A.F. stages.

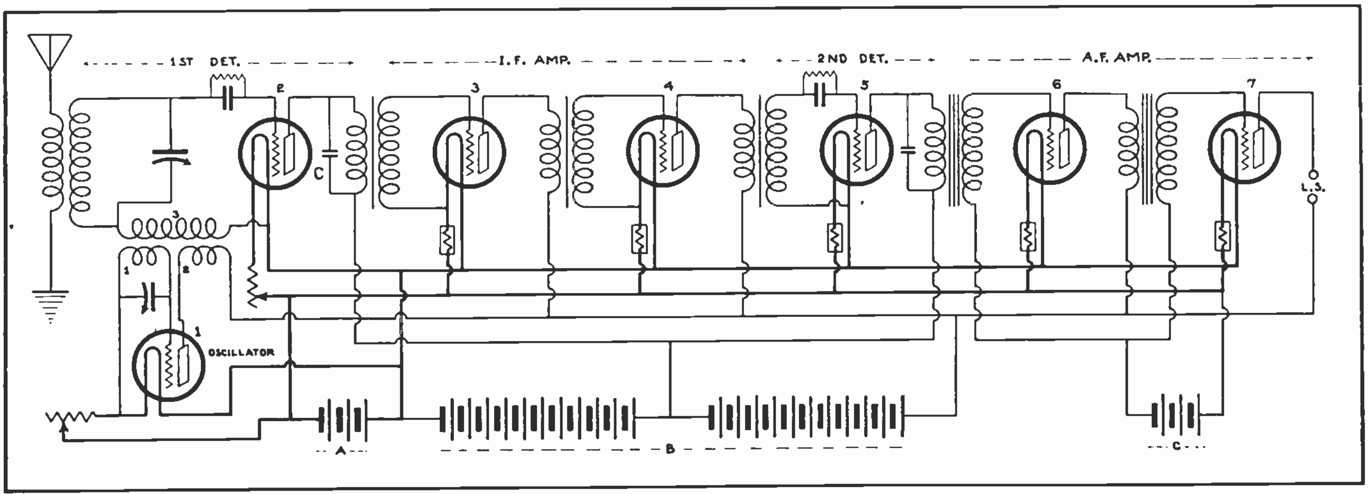

Fig. 90. Circuit diagram of a seven tube superheterodyne receiver. Note the oscillator tube coupled to the first detector and also note that both a first and second detector are used. The stages marked "I. F.amp." are intermediate frequency amplifier stages. Study the principles of this type of receiver very carefully as there are many thousands of receivers of both old and new types which use this principle.

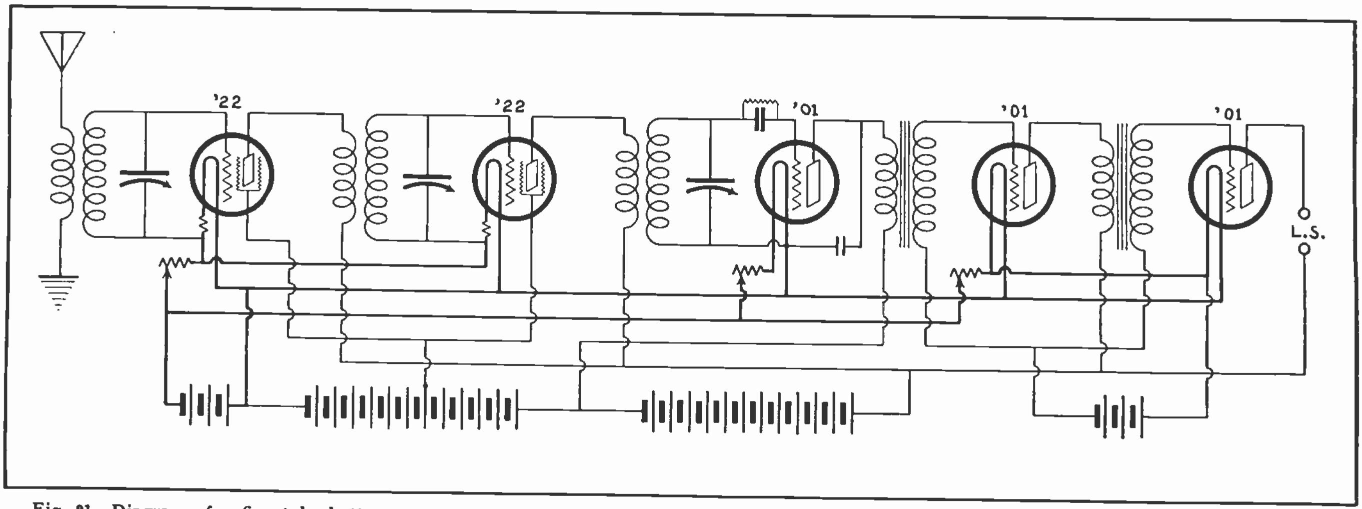

Fig. 91. Diagram of a five tube battery operated receiver using screen grid tubes in the two R. F. amplifier stages. Note the connection of the screen grids to a positive terminal on the B battery, and note that otherwise this circuit is the same as any ordinary D. C. receiver with two R. F. stages, detector, and two A. F. stages.

Some times one or two stages of radio frequency amplification are used ahead of the first detector and oscillator in superheterodyne receivers.

Different types of oscillators with various arrangements of their coupling coils or condensers and tuning condensers, are used with superheterodynes. In some cases no separate oscillator is used, but a feed back regenerative circuit is used on the first detector, so that this tube serves both as an oscillator and mixer. This arrangement is called an **Autodyne** circuit. Another circuit called the **Ultradyne** uses a modulator tube to amplify the incoming signal and then mix it with the energy from the oscillator by direct conductive coupling at the primary of the first intermediate transformer.

In Fig. 90 a fixed condenser C is connected across the primary of the first intermediate frequency transformer to bypass the radio frequency component of the energy in the plate circuit of the first detector. In some "supers" the primaries of the other I.F. transformers also have small fixed condensers connected across them to act as filters and bypass all undesired frequencies.

Superheterodyne receivers are extremely sensitive and capable of receiving very weak signals from distant stations. Many "supers" are operated with loop aerials only, and no outdoor aerials or ground connections.

The extreme sensitivity and selectivity of these receivers makes them a very popular type.

In constructing a superheterodyne set the tubes are not always placed or lined up in the order shown in Fig. 90, but are arranged for the best efficiency of operation and for convenience in connecting or wiring the receiver.

72. SCREEN GRID RECEIVERS

Screen grid receivers are simply ordinary receivers using screen grid tubes in some of the stages.

Screen grid tubes are generally used in the R.F. stages of the receiver as shown in Fig. 91. You will note that this circuit is the same as that of any ordinary five tube set with two stages of R.F. amplification, detector, and two stages of A.F. amplification; except for the leads running from the screen grids of the first two tubes to a positive tap on the "B" battery.

We have already learned in our study of vacuum tubes that screen grid tubes have very small internal capacity and therefore prevent objectionable oscillation and feed back in R.F. stages, without the aid of neutralizing. These tubes also have very high amplification factors, and it is possible to obtain as much amplification with two stages of screen grid R.F. amplification as with four or five stages using ordinary three element tubes.

For this reason screen grid tubes are used very extensively in R.F. stages of modern receivers, and also occasionally as detectors and A.F. amplifiers.

73. A.C. RECEIVERS

All of the circuit diagrams shown so far have used batteries for the current or power supply, in order to make the complete circuits easier to trace and understand.

All early types of radio receivers used batteries almost exclusively for their power, as their tubes were all designed for D.C. operation. Direct current of constant voltage is required for the plate circuits of vacuum tubes for reproducing voice and music without foreign hums or sounds. Because it enables the filament to emit electrons in a smooth even stream, D. C. is also advantageous for heating the filaments of tubes in which the filament serves as the cathode.

Batteries supply smooth constant value D. C. as long as their voltage or state of charge is up to normal, and were thus considered very convenient for radio use.

Wet storage batteries of the 6-volt automobile type are used for filament supply, except on small sets with tubes having filaments for dry cell operation, Dry B batteries consisting of a number of small cells connected in series are used for plate supply.

Some of the disadvantages of batteries, however, are their cost and weight, the fact that they discharge or run down and need to be replaced or recharged frequently, and in some cases cause corrosion and mess from acid fumes, etc.

Nevertheless, there are many thousands of receivers that are still battery operated, in use in farm and rural homes not supplied with electricity. Automobile radios and those used for airplanes are also battery operated.

Most modern sets made for use in towns and homes supplied with electricity are made for operation with current direct from the light socket or convenience outlet. As most of this current supplied in homes for lighting is A.C., most of these receivers are designed for A.C. operation and are commonly called A.C. receivers. Some "all electric" sets are made for operation on D.C. however, where homes are supplied with 110 or 220-volt D.C. for lighting.

The general operation of A. C. sets is the same as that of battery sets, and the circuits and parts are almost the same, except that A.C. filament type or heater element tubes are used in A.C. sets, and a "power pack" or power supply unit is used in place of the batteries.

All receiver tubes require D.C. for their plate circuits, even though the filaments of modern A.C. tubes can be operated on alternating current.

The power pack or unit of an A.C. receiver therefore must operate on the 110-volt A.C. supplied by the ordinary socket or outlet in the home, and it must supply the proper voltages and currents for the various circuits in the receiver.

The section of the power unit which supplies the low voltage A.C. filament current consists merely of a step down transformer. The section which supplies the high voltage D.C. current for the plates of the tubes, consists of a step up transformer, rectifier, and filter. The power unit will be described more in detail a little later.

74. SIMPLE FIVE TUBE A.C. CIRCUIT

Fig. 92 shows a circuit diagram of a five tube A.C. receiver without the power unit. The tubes used in this circuit are all A.C. type 327 tubes which are used both for detector and amplifier duty. These tubes are of the heater element type with five prong bases.

This circuit is a very simple one with which it is easy to compare the circuits of an A.C. receiver with the battery operated types already shown.

In battery sets rheostats are used in the filament circuits of the tubes, to keep the filament voltage properly adjusted as the battery voltage changes slightly during discharge.

Such filament rheostats are not necessary in A.C. receivers as the line voltage supplied to the filament supply transformers usually remains about constant, so the transformer secondary delivers steady voltage of the proper value to the filaments at all times. In case the primary voltage does at times fluctuate with the load on the line the transformer voltage can be kept right by a compensating device in its primary circuit. Note that the filaments of all tubes in Fig. 92 are simply connected in parallel to the 2½-volt A.C. filament supply leads.

In circuits using heater element type tubes as shown in Fig. 92, the grid returns are connected to the cathode terminals as shown. This cathode instead of the filament is the electron emitting element in these tubes.

The plate circuits are also completed through the cathodes. Note that all plate leads connect to the positive terminals of the "B" power supply. The plates of the amplifiers connecting to the 90-volt terminal, and the plate of the detector to the 45-volt terminal. The current flow can be traced from the positive terminal of the power unit, through any plate, through the electron stream to the cathode and then back to the negative (B-) terminal of the plate power supply, which is connected to all cathodes.

The variable condensers used for tuning the R.F. stages in Fig. 92, are shown connected together by a dotted line, which indicates that their rotors are all located on one shaft or operated from one dial.

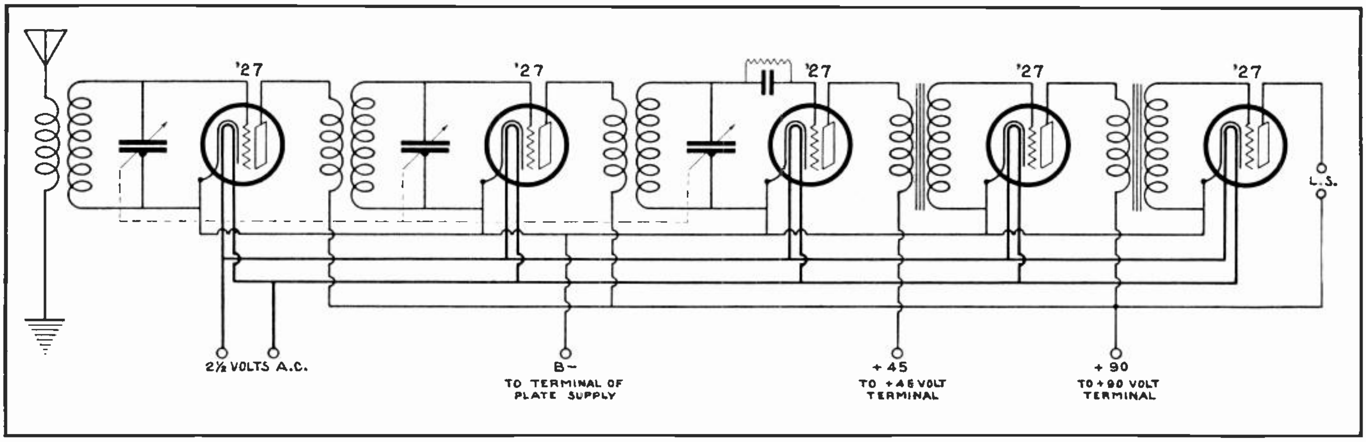

Fig. 92. Circuit diagram of a five tube A. C. receiver using A. C. heater-element tubes. The "27" tubes used in this circuit will serve either as amplifiers or detectors. Note the connections of the cathodes of the heater-element tubes to the B— terminal.

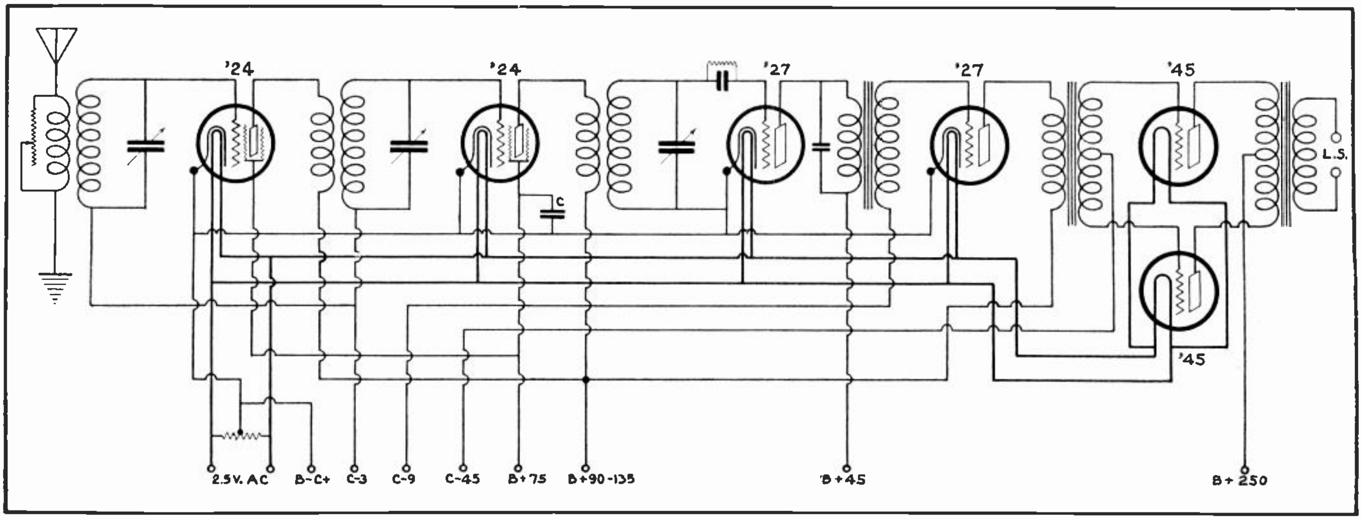

Fig. 93. Circuit diagram of a very popular six tube A. C. receiver, with screen grid R. F. amplifier tubes, and two power tubes used in push-pull in the last A. F. amplifier stage. A. C. heater element tubes are used for the R. F. amplifiers, detector, and first A. F. amplifier. The power tubes in the push-pull stage are "filament type" tubes with the filaments serving as the cathodes, but the filaments of these "45" tubes operate on the same voltage as the heater elements of the other tubes do. Note the high C voltage used for negative grid bias on the power tubes, and note also the various terminals where the leads of this receiver connect to the power supply unit.

This is called single dial tuning control and is the way most modern receivers are equipped.

75. A.C. CIRCUIT WITH SCREEN GRID R.F. AMPLIFIERS AND PUSH-PULL POWER STAGE

Fig. 93 shows a very practical circuit for a 6 tube A.C. receiver using screen grid tubes in the R.F. stages and two power tubes in push-pull in the last A.F. stage.

With the high amplification factors of the screen grid tubes, and the large undistorted power capacity of the "345" power tubes in push-pull, a receiver of this type will give good selectivity, sensitivity, and plenty of volume of good quality sound to meet most any requirements for a home set.

The R.F. amplifier tubes, detector, and first audio amplifier are all A.C. heater element type tubes, and the power tubes in the last audio stage are A.C. "filament type". All of these tubes, however, use the same filament or heater element voltage which simplifies the wiring and power supply considerably.

The screen grids of the "24" tubes in the R.F. stages, connect to a 75-volt positive terminal of the plate power supply unit. A small bypass condenser C is usually connected between this screen grid lead and the negative B lead which connects to all cathodes of the heater element tubes.

Three volts negative bias is used on the control grids of the "24" tubes, 9 volts bias on the grids of the "27" tubes, and 45 volts bias on the grids of the "45" power tubes.

A variable high resistance is shown connected across the primary of the first R.F. transformer or aerial coupler, to be used as a volume control. As this resistor shunts more or less of the received signal energy around the primary of this transformer and thereby controls the amount of energy applied to the grid of the first R.F. tube, this of course controls the volume throughout the rest of the set and at the speaker. This circuit shown in Fig. 93 is very similar to those used in some of the most popular types of modern A.C. receivers.

The power supply unit is not shown, and in tracing the various circuits just start at a positive supply terminal and trace through to negative, etc.

76. A.C. CIRCUIT WITH FILAMENT TYPE AMPLIFIER TUBES

Fig. 94 shows a circuit diagram of a complete 5 tube A.C. receiver. Two of the "26" type tubes are used as R.F. amplifiers, and one "26" tube and one "71" power tube for A.F. amplifiers. These four tubes are all of the A.C. filament type. The detector is a "27" heater element type A.C. tube. The 380 tube shown in the power unit at the lower part of the diagram is a full wave rectifier tube. The negative bias voltage for the amplifier tubes of this circuit is obtained from the voltage drop in a resistor placed in series with the negative return of the plate current supply. The grid returns of the R.F. amplifier tubes and the first A.F. amplifier are all connected together to the C- 9-volt tap on the bias resistor. The grid return of the power tube in the last audio stage is connected to the C- 40-volt point on this resistor. The voltage drop in this bias resistor sets up a difference in potential between the grids of the tubes and the center taps of the resistors R and R1, from which the negative return is taken to the B- and C+ connection of the power supply, and through which the plate current returns.

The plate current of the A.C. filament type tubes flows from the positive terminal of the plate supply through the transformer primaries to the plates, through the electron streams in the tubes, down whichever side of the filaments the A.C. filament current happens to be flowing at that instant, and then through one half of the resistor to the center tap, and from there back to B—.

You will note that the plate of the detector tube is supplied with 45 volts, those of the two R.F. amplifiers and the first audio amplifier with 90 volts, and that of the "71" power tube with 180 volts.

These different voltages are obtained from various points along a resistor shown near the right side of the diagram in Fig. 94, and this resistor and the plate circuit terminals are fed with rectified D.C. which comes through the filter chokes from the rectifier tube.

The high voltage secondary S H of the power transformer supplies A.C. to the rectifier tube, which converts it to pulsating D.C. Practically all of the ripple or pulsation of this D.C. voltage is then smoothed out by the filter system consisting of the filter chokes and the condensers C1, C2, and C3. The lower 5 volt winding on the transformer secondary supplies A.C. to the filaments of the rectifier tube, and the upper 5 volt winding supplies the filament of the power tube. The 2½-volt secondary supplies A.C. to the heater element of the detector tube, and the 1½-volt winding supplies A.C. filament current to the R.F. amplifier tubes and first audio amplifier tube.

77. POWER UNITS FOR A.C. RECEIVERS

The power supply unit or power pack in an A. C. receiver is usually mounted with the rest of the parts of the receiver on one main frame or chassis. The power unit is often mistaken for part of the amplifying equipment.

Fig. 95 shows a photo of a modern A. C. receiver without its cabinet. The R. F. transformers and tuning condensers are in the long metal box or shield in the right foreground and the tubes and A. F. transformers can be seen at the rear. The power unit is located at the left of the receiver units. The power transformer and filter chokes are in the square metal box, and the rectifier tube and filter condensers are at the rear of this box.

By examining Fig. 82 once more you will note a power unit of different arrangement. Here the power transformer is the left one of the three large units at the rear of the set, the filter condenser consisting of several separate units is next in the light colored box, and the filter chokes are on the right.

Fig. 96 shows a circuit diagram of a complete power supply unit a little different from the one shown in Fig. 94.

The primary of the power transformer is connected to the 110-volt supply by means of the plug and cord shown on the left. The lower secondary coil supplies low voltage (7 volt) A. C. to heat the filaments of the two half-wave rectifier tubes. This winding also has a center tap to be used as the positive lead for the plate supply.

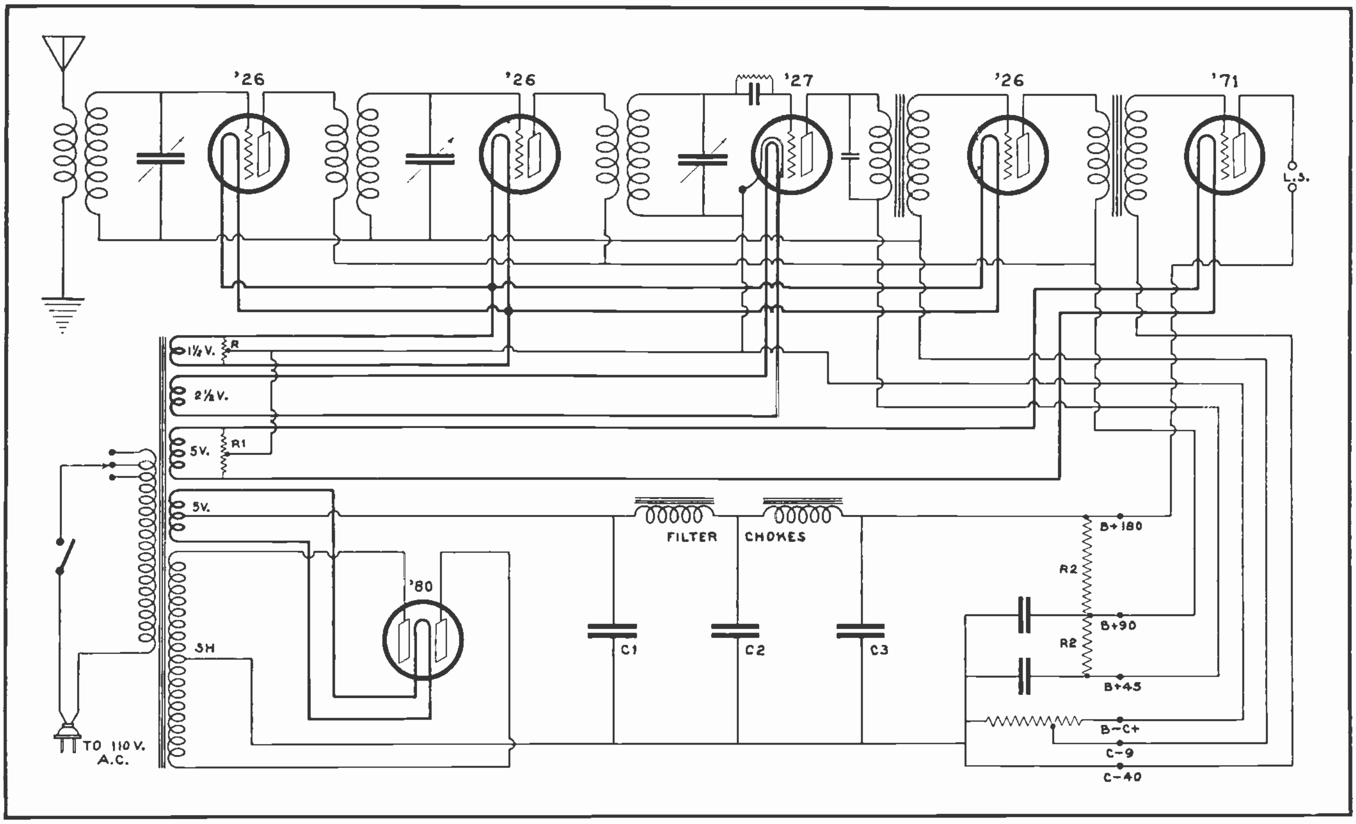

Fig. 94. Complete circuit diagram of a simple five tube A. C. receiver and its "power pack" or power supply unit. This receiver uses only one heater element tube for the detector, and the amplifiers are all A. C. "filament type" tubes. Note the manner in which the grid return leads of the amplifier tubes are made through the C— terminal, through the biasing resistor to C+, and then to center taps on the resistors connected across the filament supply leads. Trace the circuits of the power unit carefully to get a good understanding of this device while reading the explanations in the accompanying paragraphs.

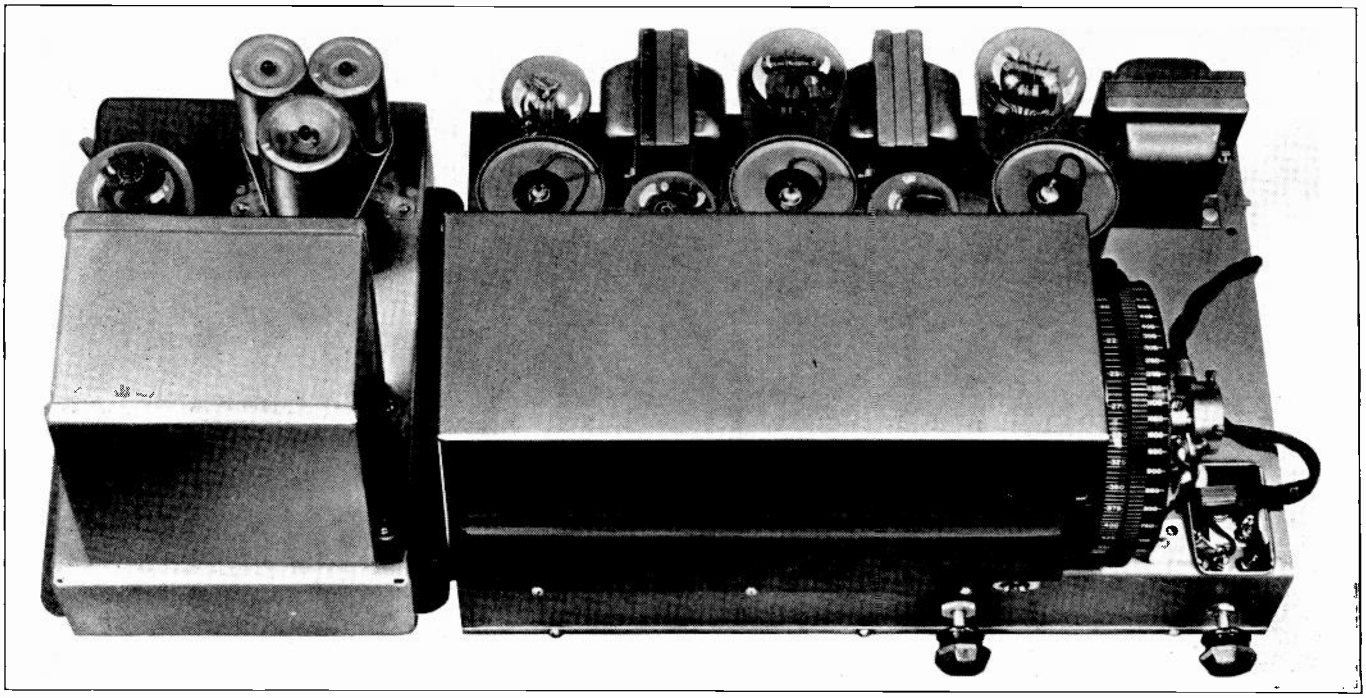

Fig. 95. This excellent photograph shows the construction of an eight tube A. C. receiver and its power unit. Note the thorough shielding of the R. F. transformers and tuning condensers by the large shield, and that of the power transformer and chokes in the smaller shield on the left. The three screen grid tubes are also shielded by individual shield "cans". The R. F. transformers and condensers are also shielded from each other by separate partitions inside the large metal box. (Photo courtesy of Zenith Radio Corp.)

The top secondary coil furnishes 2½ volt A. C. for the filaments and heater elements of the tubes in the receiver. The main center section of the secondary supplies high voltage A. C. to the plates of the rectifier tubes.

The entire power unit consists of four sections, marked A, B, C, and D in Fig. 96. Section A is the power transformer which supplies the various A. C. voltages required. It steps the voltage down from the 110 volts on the primary, to the coils of few turns on its secondary for the filament supply. And it also steps up the voltage on its high voltage secondary which supplies current to the rectifier tubes.

This high voltage secondary winding is designed according to the types of tubes used in the receiver, and the plate voltages required by them. When this winding feeds a full wave rectifier as in Fig. 96, only half of the winding is in use at any one time, each half feeding its respective tube during every other alternation. Therefore, each half of this winding must develop the full voltage required by the rectifier tubes and the highest voltage required by the plates of the power amplifier tubes in the receiver. Note that this secondary has a center tap for the negative B return lead.

Section B of this power unit consists of the two half wave rectifier tubes connected for full wave rectification. Their plates are connected to opposite ends of the high voltage transformer winding, and when alternating voltage is induced in this winding first one rectifier plate becomes positive and then the other does.

When either of these plates is positive it attracts negative electrons from the filament, thus completing the circuit and allowing current to flow from its plate to the filament, but never in the opposite direction.

During the alternation when the upper end of the transformer secondary is positive, current will flow as shown by the solid arrows, out from this positive lead through the upper rectifier tube, on from the filament of the tube through one half of the lower transformer coil, out through the chokes and filter system to B+, then to the tube plates, through the tubes and back to B— which returns to the center of the transformer secondary.

During the next alternation current will flow from the lower end of the winding as shown by the dotted arrows, through the lower rectifier tube, and out along its filament lead through one half of the lower secondary coil, and out on B+ in the same direction as the other alternation.

So we find that the rectifier tubes change the A. C. from the transformer into pulsating D. C. for the plate supply, the center tap on the low voltage winding being the positive lead from the rectifiers, and the center tap on the high voltage winding being the negative return.

The rectified D. C. is pulsating as shown by the curve at A in Fig. 97, and varies too much to be suitable for use on the plates of the receiver tubes.

78. FILTER

The filter unit in Section C, consisting of two chokes in series and 3 condensers in parallel with the plate supply, smooths out this pulsating current about as shown by the curve at B in Fig. 97. This is accom-

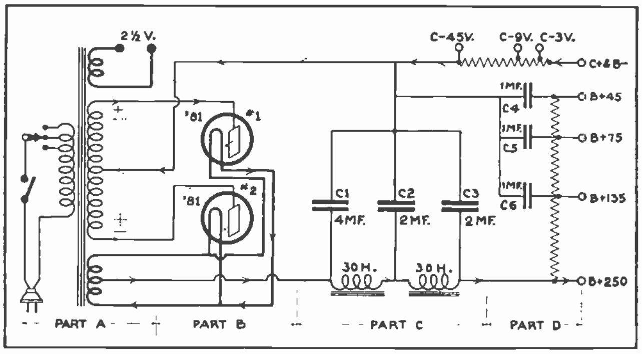

Fig. 96. Wiring diagram of a power supply unit showing the transformer, rectifier, filter, and voltage divider sections. Observe this diagram carefully and make sure you thoroughly understand the function and operation of each part.

plished by the combined action of the choke coils and condensers.

The choke coils which have a very high inductance of about 30 henries, consist of several thousand turns of fine wire wound on iron cores, and are connected in series with the positive lead from the rectifier.

As the voltage of the rectifier current starts to rise during any pulsation, it builds up current in the choke coils and sets up a flux around them which generates in their turns a counter E. M. F. which opposes or limits the building up of this current. During this period of rising voltage the condensers are receiving a charge and are absorbing the peaks of the current and energy waves which are blocked and held back by the chokes.

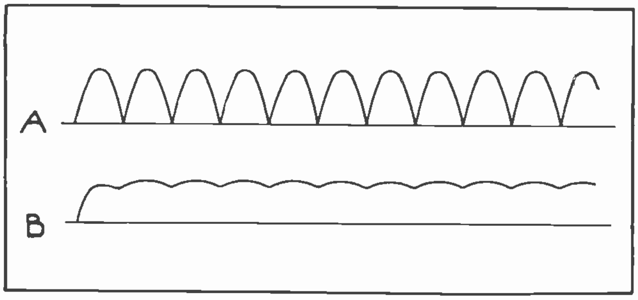

Fig. 97. Curves showing pulsating D. C. as it comes from the rectifier, and also after the ripples have been smoothed out by the filter.

When the voltage of a pulsation from the rectifier starts to decrease toward zero the strong flux already built up around the chokes now collapses and induces in their turns a voltage which tends to keep the current flowing. As soon as this voltage starts to lower the condensers also start to discharge and supply current through the chokes and to the plate circuits of the receiver tubes.

Thus the peaks of the waves or pulsations are blocked by the chokes and stored by the condensers and then fed back into the hollows, smoothing out nearly all of the ripple or pulsations in the D. C. plate supply. Thus the name "filter" given to this part of the power unit.

79. VOLTAGE DIVIDER

Section D in Fig. 96 is the **voltage divider** consisting of a high resistance tapped at several proper points, and having several fixed condensers connected in parallel with its various sections.

The purpose of this resistor is to lower the voltage from the filter to the desired value for the plates of the various tubes. This is accomplished by the plate current flowing through the sections of this high resistance and causing a voltage drop.

The output voltage of the filter of a power unit should be just high enough for the plate of the power tube, or the highest plate voltage required by the receiver. In Fig. 96 this is the voltage obtained between the terminals B+ 250 and B—. This voltage is too high for the plates of the amplifier and detector tubes, so these tubes get their plate voltages at the taps along the resistor or "voltage divider", as at B+ 135 and B+ 45. The B+ 75 terminal is for the screen grids of screen grid amplifier tubes.

The fixed condensers connected between the taps on the resistor and the negative lead to the filter, are for the purpose of storing up a charge of energy or current during periods of normal plate current flow, to be delivered to the tube plates when the signal changes on the grids cause the plates to draw more current. If it were not for these condensers, during periods of heavy plate current flow the increased current through the resistor would cause increased voltage drop and thereby reduce the plate voltage temporarily. This would tend to distort the signal and also reduce the amplification of the tube. With the condensers used as shown, when the voltage lowers slightly due to increased current demand and voltage drop, the condenser immediately begins to discharge and thus supplies the extra current required. Thus nearly a

Fig. 97-C. Photo showing several types of fixed condensers used for filter condensers in power supply units. (Photo courtesy of Aerovox Wireless Corp.)

constant voltage is maintained at the plate lead terminal during all normal variations of plate current. Fig. 97 shows several types of filter condensers including three of the electrolytic type in the lower part of the figure.

The proper resistance for each section of a voltage divider of a power unit can be simply and easily calculated by Ohms Law. For example, suppose the receiver supplied by the unit shown in Fig. 96, consists of two 324 screen grid R. F. amplifier tubes, a 327 detector, another 327 for the first audio stage, and two 345 power tubes in push pull for the last A. F. stage.

The two 324 tubes each require about .004 ampere plate current and about .12 ampere each on their screen grids, the 327 tube used as detector requires about .003 ampere plate current, and the 327 tube used as first A. F. amplifier uses about .005 ampere plate current. This totals .040 ampere or 40 milliamperes, to go through the first section of the resistor.

We do not need to include the plate current of the power tubes as their current does not pass through the resistor but goes direct from the B+ 250 terminal to their plates.

As the voltage drop required in this first section is 250 — 135, or 115 volts, and as $E \div I = R$, then $115 \div .040 = 2875$ ohms resistance needed, to cause the voltage drop and get 135 volts at this terminal for the plates of the two R. F. amplifiers and the first A. F. amplifier.

To reduce the voltage from 135 to 75 volts or a drop of 60 volts, we find the current through the next resistor section is only that of the screen grids for the 324 tubes and the plate current for the detector, or .027 ampere. Then $60 \div .027 = 2222$ ohms, resistance required in this section.

The last section of resistance carries only the plate current of the detector, and must cause a voltage drop from 75 to 45, or 30 volts, so $30 \div .003 = 10{,}000$ ohms resistance required. Convenient resistor units such as shown in Fig. 98, and with different values in ohms, can be purchased for use in power packs.

80. GRID BIAS RESISTOR

The tapped resistance in series with the negative B lead of the filter in Fig. 96, is for the purpose of obtaining the negative grid bias voltages for the various tubes.

All of the current from the plate and screen grid circuits of the receiver tubes must return through this resistor on its way back to the rectifier. This causes a proportional voltage drop of different amounts at the various taps along the resistor.

The negative lead C+ and B— on this resistor which is connected to the B— terminal on the receiver, is negative to the positive taps B+ 45, B+ 75, B+ 135, and B+ 250, but this same terminal is positive to the taps C-3, C-9, and C-45 on the bias resistor. So the negative grid bias voltages can be obtained from the taps on this resistor, and the C+ or grid return lead from the filament is connected to the B— terminal of the power supply unit.

The amount of resistance to be used to get the proper voltage drop in the various sections of this grid bias resistor can be determined by the same rule or method as that used for the voltage divider, except that in this case we include the plate current of the two power tubes with the plate and screen grid current of the other tubes, as it all flows back through the bias resistor. The plate current of a 345 power tube is about 30 milliamperes, so for two of these tubes we would add .060 ampere to the .040 for the other tubes, making a total of .1 ampere or 100 milliamperes.

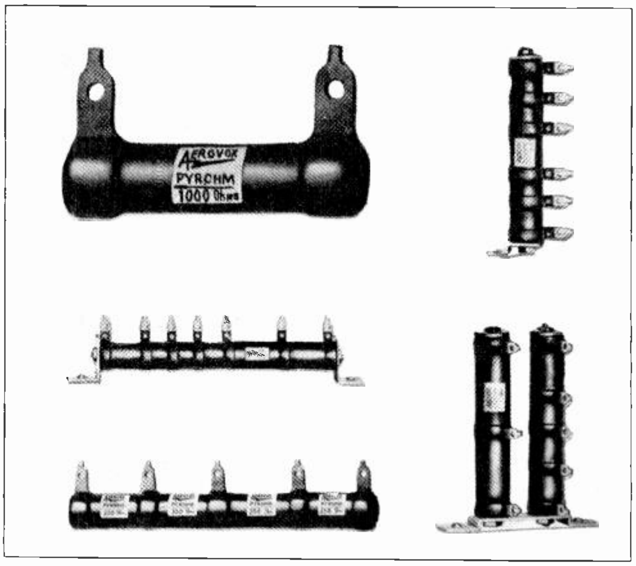

Fig. 98. This photo shows a number of convenient tapped resistor units used for voltage dividers, C bias resistors, etc., in power supply units. (Photo courtesy of Aerovox Wireless Corp.)

81. BATTERY ELIMINATORS

Battery eliminators to take the place of the A and B batteries of a D. C receiver, are very similar to the power unit just described, except that complete eliminators have two separate rectifier units, one to supply the low voltage D. C. for tube filaments, and one to supply the higher voltage D. C. for plate supply.

The rectifier in the A battery eliminator must be designed to handle much heavier currents at lower voltage, than the rectifiers used for the plate supply or B eliminator.

Regular 2 ampere Tungar bulbs are sometimes used as rectifiers in A eliminators and electrolytic and copper oxide rectifiers are also used in some of these devices.

The A eliminator requires a filter system just as in the B eliminator, except that the current capacity of the condensers and choke coils must be much greater to handle the filament current load.

The B eliminator unit is practically the same as the power unit shown in Fig. 96, except that the transformer does not have the low voltage secondary for tube filament supply.

Most B eliminators are designed to supply lower voltage than the power units of A. C. receivers, because most D. C. receivers which were built for battery operation use tubes which do not require such high plate voltages as are used on the power tubes of many A. C. receivers.

A and B eliminators are built in separate units and in combinations of both, and are generally contained in a neat sheet metal case which looks something like a power pack or battery charger. Thousands of D. C. sets which formerly used batteries are now operated from eliminators which have replaced their costly, messy, and troublesome batteries.

82. GASEOUS RECTIFIERS

Vacuum tube rectifiers of the hot filament type have been explained in earlier sections. Rectifiers in radio power units often use a gas filled rectifier bulb called a Ratheon tube, which has no filament. These rectifier tubes make use of a well known electrical principle, that current will flow from a small or sharp electrode through space to a larger electrode quite easily, but will not flow from the large electrode through space to the small one nearly as easily.

Full wave Ratheon tubes have two large electrodes made in tubular or cup shaped form, inside of which are located two small electrodes in the form of small rods or wires. These are sealed inside a gas filled bulb with leads brought to the outside as illustrated in Fig. 99-A, and the leads are connected to the power transformer and filter as shown by figure 99-B which uses the conventional symbol for this type of tube. The small electrodes are connected to opposite ends of the transformer secondary, and the large electrodes are connected together and to the positive lead of the filter.

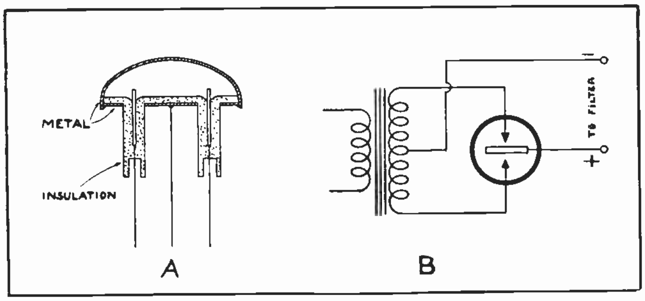

Fig. 99. At A is shown a sketch of the anode and cathodes of a full wave gaseous rectifier tube, and on the right is shown a connection diagram for a tube of this type when used in a power pack.

When alternating voltage is induced in the transformer secondary, first one of these small electrodes and then the other becomes positive. During the periods when they are positive current passes from them, through the ionized gas to the large electrodes, and out on the positive lead to the filter, through the receiver, and back on the negative lead to the center tap of the transformer secondary.

When the polarity reverses so that either of the large electrodes tends to become positive to its small electrode, the current is almost entirely cut off, only a few millionths of an ampere flowing. When either of the small electrodes is positive many thousandths of an ampere flow.

Even though one of the small electrodes is positive when the other is negative, practically no current flows between them because of their distance from each other and also because current cannot easily flow through a gas or space to any small electrode.

When voltage is first applied to a Ratheon rectifier tube is requires about 45 seconds for the gas to become fully ionized and for the current to build up to its full value or the capacity of the tube.

83. AUTOMATIC TUNING AND REMOTE CONTROL

As previously mentioned the circuits of radio receivers are generally tuned to the desired stations or wave lengths by means of variable condensers. In most modern sets all three of these condensers are connected together and operated from one dial. This greatly simplifies the tuning and operation of the receiver.

The dials may be of the disk, drum, or band type, and are generally equipped with scales and markings in wave lengths or kilocycles, or both. This makes it easy to locate or tune in any desired station, once it is charted or the operator learns where it can always be found on the dial.

Some sets have automatic tuning devices which enable one to quickly select any desired station by merely pressing a marked button or lever for that station. Some of these devices are merely a mechanical arrangement whereby the buttons or levers push or move the condensers to the proper point. Other automatic tuners cut in or out fixed condensers of the proper values to obtain the desired wave length change. One very effective type used with superheterodyne sets, simply changes the tuning of the first detector and oscillator circuits by switching in the proper combinations of fixed condensers. Fig. 100 shows a popular type of receiver with automatic tuning. Note the tuning buttons in the small opening on the right hand side of the cabinet.

Some receivers are equipped with remote control tuning features, which enable one to control or tune the set from a small push button block on a desk or chair arm, while the receiver is in another part of the room or even in a different room. The button control block is connected to the set by means of a control cable which may have from two to several dozen wires in it, according to the type of remote control used.

Some types of remote control have a small motor in the receiver, which turns the dial or condensers to a certain position for each button pressed. The motor also operates a switching mechanism and set of relays which break its circuit and stop it at the proper point.

Other forms of remote control merely switch fixed condensers of the proper size in and out of the circuit as with automatic tuning. The switch-

Fig. 100. Popular type of radio receiver with automatic tuning, and in a beautiful console cabinet. The automatic tuning buttons can be seen where the small door is opened on the right of the cabinet. (Photo courtesy of Zenith Radio Corp.)

ing may be done by a set of small relays located in the receiver and controlled by the push buttons and cable, or in some cases the condensers may be mounted in the same block or box with the buttons, and be controlled directly by the button switches.

One type of remote control has an oscillator tube and its tuning condensers located in the control box.

Most automatic and remote control devices for radio receivers are quite easily understood and kept in repair by anyone with a good knowledge of radio principles and circuit tracing and testing. Automatic tuning and remote control are often very great conveniences, and a number of high grade receivers are being equipped with these features.

84. TONE CONTROL

Some recent makes of radio receivers are being equipped with what is known as tone control, for regulating the proportionate strength of the high or low notes of voice or music delivered by the speaker.

Speech amplification equipment for public address systems, and sound picture installations are also generally equipped with tone control.

Tone control can be accomplished by connecting across one of the audio frequency transformers, a condenser of the right capacity to absorb some of the energy of the high frequency notes, thus reducing their strength, without reducing very much the low frequency notes.

A variable resistor of about one megohm is usually connected in series with the condenser to regulate the amount of control or absorption of high notes as desired. The condenser used for this purpose is usually about .004 to .008 mfd. capacity. A choke coil in series with a variable resistor can also be used across the audio circuit, to absorb or shunt out some of the energy of low frequency or bass notes without greatly affecting the higher frequencies.

You have learned that it requires much more energy to reproduce the low frequency notes than is required for those of higher pitch, so in some cases simple resistance volume control is used to cut down the energy or volume and thus reduce the low notes more than the high ones.

With certain voices or musical notes and with certain acoustical conditions in rooms or auditoriums, it is often a great advantage to have tone control to make the reproduction of the voice or music more natural and pleasing.

85. PHONES AND LOUDSPEAKERS

So far we have learned how radio energy is produced, transmitted, received, detected, and amplified. Now in order to reproduce at the receiver the audible sounds which were impressed on the carrier wave at the transmitter, we must use a pair of phones or a loudspeaker. These devices operate on the same general principle as a telephone reciever, and by means of magnetic action on a diaphragm convert the electrical impulses from the amplifier output back into air waves or audible sound.

The construction and operation of telephone receivers have been explained in earlier sections, so we need not go into great detail on those principles here.

Ear phones for use with radio receivers are generally made in pairs and fastened together with a head band as shown in Fig. 101. The two units are connected in series and equipped with a cord with metal tips or plugs for convenient connection to the set.

Ear phones for radio use are made in thin flat units like a central telephone operator's head set, and are made as light in weight as possible for comfort to radio operators or testers who may wear

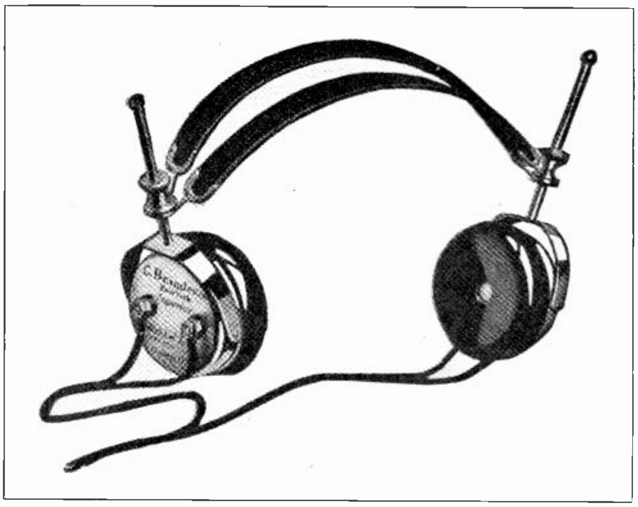

Fig. 101. This photo shows a pair of earphones or headphones as they are often called. Phones of this type are very useful for receiving weak signals that are not strong enough to operate a speaker, and also for testing radio devices and circuits.

them for long periods. The upper view in Fig. 102 shows a head set with the rubber cover and the diaphragm removed from one of the phones to show the magnets and coils inside. The lower view shows a slightly different phone unit for use with small loudspeaker horns.

The coils of the electro-magnets in these phones are usually wound with several thousand turns of very fine enameled copper wire, and good headphone sets have a resistance of 2,000 to 5,000 ohms. The amount of current supplied by radio receivers is very small, so the phone magnets should have a great number of turns to give them as many ampere turns magnetic strength as possible with the small currents which operate them. This is particularly true of phones to be used with crystal receivers and single tube or small low cost receivers, where the phones must be extremely sensitive. It is also desirable to use phones with large numbers of turns on their coils when the phones are to be used with vacuum tube receivers, because if the impedance of the phones is about the same as that of the tube plate circuit, best results will be obtained from the tube.

Fig. 102. The top photo shows a pair of phones with the cover and diaphragm removed from one to show the magnets, and below is shown an open view of a single large phone unit for use on a speaker horn.

Most earphones have a ring shaped or horseshoe shaped permanent magnet in the case, and the coils of the electro-magnets are usually placed over the ends or poles of these permanent magnets, as shown in Fig. 103.

In this sketch a sectional view of the ring shaped permanent magnet is shown at P, with the pole pieces N and S attached. The coils C are placed over these pole pieces as shown.

When no current is flowing through the coils the permanent magnet poles hold the thin iron diaphragm slightly attracted as at D. When current is passed through the electro-magnet coils it sets up flux and polarity which either aids or opposes that of the permanent magnets, according to the direction of current flow. If this current is either A. C. or pulsating D. C. it will cause the diaphragm to vibrate and produce sound waves.

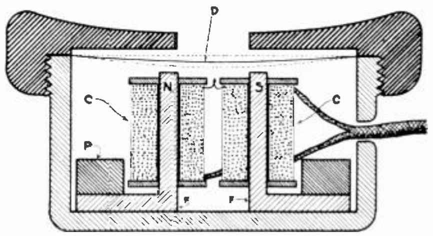

Fig. 103. Sectional sketch showing the construction and operation of an earphone unit. Note the arrangement of the permanent magnet and the electro-magnet coils.

When a pair of phones is connected in the plate circuit of a vacuum tube, a small amount of current (the normal plate current) flows through them all the time the tube filament is lighted. When signal variations are impressed on the grid of the tube the plate current pulsates or decreases and increases, and the pulsating D. C. causes the phone diaphragms to vibrate, as shown by the dotted lines in Fig. 103, and thus reproduce the sound.

When a loudspeaker or phones are connected to the secondary of an output transformer, instead of directly in the plate circuit, the current flowing through them will be alternating, but will also vary in value with the signal variations, so the phone or speaker diaphragm will still vibrate and reproduce the sound.

When handling headphones care should be taken not to allow the diaphragms to become permanently bent or loose. Sometimes a piece of dirt or magnetic material will become lodged between one of the magnet poles and the diaphragm and will interfere with the operation of the phone. The cap can be unscrewed and the diaphragm carefully removed and the dirt cleaned out.

Great care should be used in cleaning or working around the coils as their wires and connections are so fine that they are easily broken. Headphones can be quickly and easily tested for open circuits by connecting them directly across a 1½ volt dry cell. If the circuit is complete a click should be heard in the phones when the connection to the cell is made and broken. Headphones are very useful with small low power receivers, for receiving very weak signals from distant stations, and also for testing receivers. Headphones were used exclusively for radio reception before the development of loud speakers.

86. LOUDSPEAKERS

Where radio receivers are operated in homes and for entertainment purposes it is usually desired to have the sound spread throughout the room so it can be heard by several people anywhere in the room, without the inconvenience of having to sit near the receiver and wear uncomfortable headphones.

To accomplish this we must use a loudspeaker or special reproducing unit which usually has a larger diaphragm than headphones have. It is not practical to try to use ordinary headphones for this purpose, because even if they were supplied with sufficient power from the output of the receiver, their diaphragms are not large enough to produce the desired volume of sound without distortion and chattering.

Early types of loudspeakers many of which are still in use with older receivers, merely used a large sized phone unit very similar to the ones just described, except with larger diaphragms. Such units are attached to the base or throat of a large horn. Fig. 104 shows a speaker of this type and also a large phone or reproducing unit without the horn.

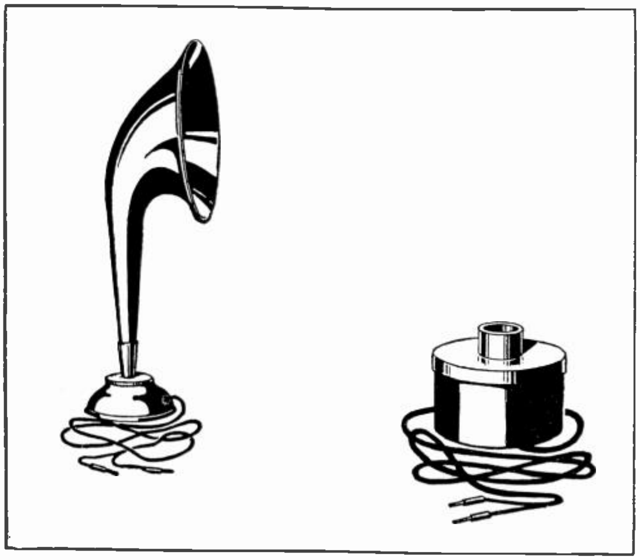

Fig. 104. A simple horn-type loudspeaker is shown on the left, and a reproducer unit similar to a large phone is shown on the right.

The horn serves to give the diaphragm a better "grip" or control of the larger volume of air necessary to move for the louder sound. Speaker horns are usually made of wood, fibre, paper mache or such non-resonant materials, to avoid vibration of the horn, and "tinny" effects such as would be obtained if metal were used. Fig. 105 shows two horn-type loudspeakers. The one on the right has its own amplifier for boosting the output of an ordinary small receiver up to sufficient strength to operate this large unit and horn.

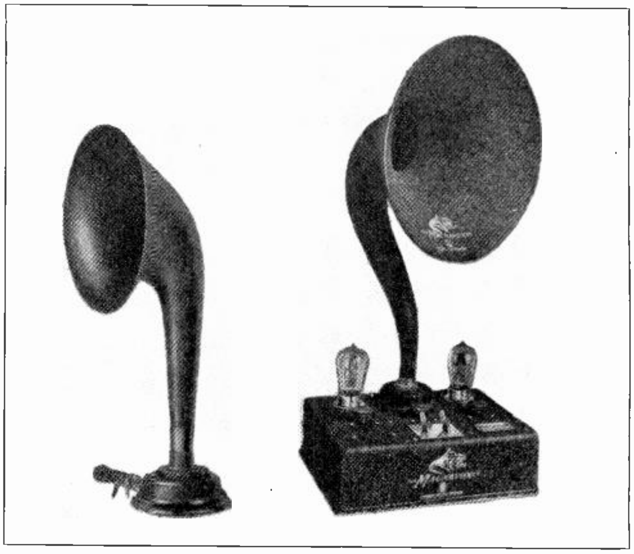

Fig. 105. Two styles of horn speakers, one of which has an extra amplifier attached.

Another type of loudspeaker reproducing unit known as the balanced armature type, is shown in the larger sketch in Fig. 106. In this type of unit a large horseshoe permanent magnet is used to provide a field in which a small balanced iron armature moves. This armature is pivoted at its center and has a thin rod or stiff wire connecting its end to the diaphragm.

The movable armature has a small light weight coil wound on it, or in some cases around it in solenoid form, but not touching it. In either case this coil is connected to the receiver output and when current flows through it in the direction indicated by the arrows, it creates N and S magnetic poles in the armature as shown, causing its right end to swing down and its left end up, because of the attraction and repulsion of the poles of the horseshoe magnet. If pulsating D. C. or alternating current is passed through this armature coil it will rapidly

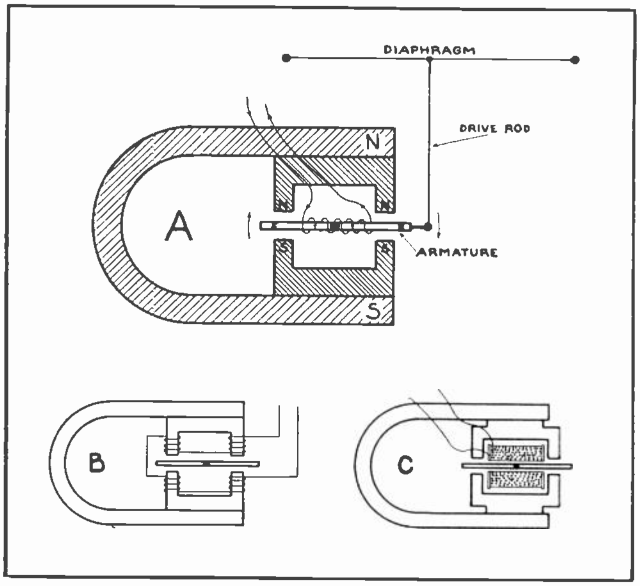

Fig. 106. These sketches show the construction of loudspeaker driving units or reproducers of the balanced armature type.

reverse the polarity of the armature and cause the armature and diaphragm to vibrate.

In another unit of very similar design the coils are wound on the pole tips of the permanent magnet as shown in the small sketch at B in Fig. 106. Pulsating current through these coils causes certain poles to be strengthened and others to be weakened, and the shifting flux causes the armature core to be vibrated as before.

One of the latest speaker units operating on this principle is constructed as shown at C in Fig. 106 and uses a stationary solenoid coil to induce the magnetic polarity in the iron armature. This relieves the armature of all unnecessary weight and eliminates the necessity of having a moving coil, with its possibility of breaking the flexible connections, etc.

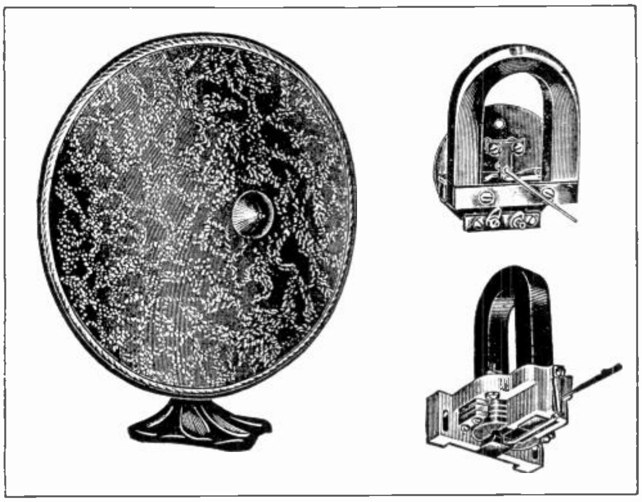

Fig. 107. A cone type speaker is shown on the left in this figure, and on the right are shown two types of driving units or reproducers of the balanced armature type.

The diaphragms used with speaker units of this type do not need to be metal as there is no direct magnetic pull on them, so they are generally made of non-magnetic materials.

In one very common type of speaker called the **cone type,** the driving rod of the speaker unit is connected to the center of a large cone instead of to a small flat diaphragm. These cones are made of paper, fibre, treated cloth, etc.

Cone speakers are capable of moving large volumes of air and of producing great sound volume with very good tone quality. They reproduce the low frequency bass notes of music much better than the small horn speakers do. Fig. 107 shows a cone speaker on the left, and two types of cone speaker reproducing units on the right.

87. DYNAMIC SPEAKERS

One of the best and most popular types of loudspeakers developed in recent years is the **dynamic speaker,** which is used on the great majority of modern radio receivers Fig. 108 shows three views of dynamic speakers, and Fig. 109 is a sketch illustrating the construction and operation of this type speaker.

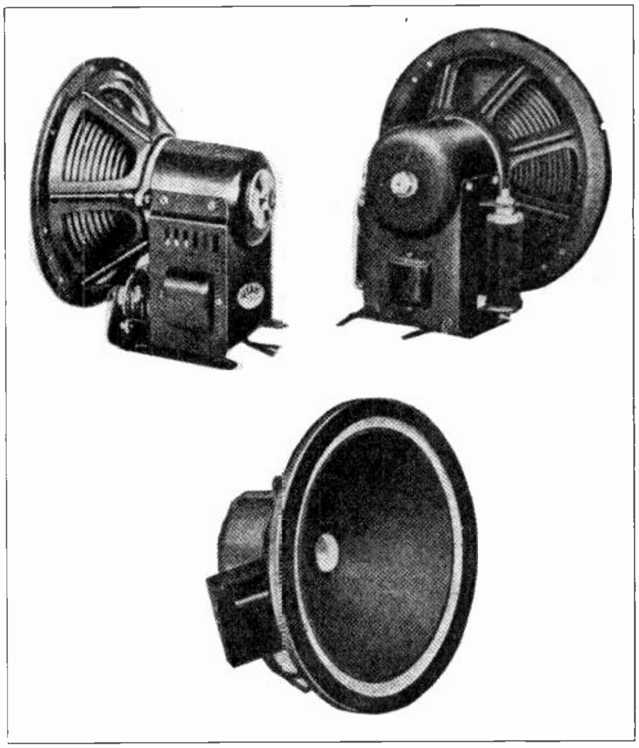

Fig. 108. This photo shows several views of dynamic speakers such as are very commonly used with modern radio receivers.

The unit consists essentially of a powerful electro-magnet for producing a magnetic field, and a small cone coil or "voice coil" attached to the apex or point of a stiff paper cone.

The electro-magnet or field magnet is wound with a great number of turns of wire around a heavy iron core. When the unit is in operation the coil of this magnet is excited by D. C. either from the power supply unit of the receiver or from a separate rectifier. The rectifier is usually of the dry copper oxide type, or a rectifier tube, and is attached directly to the speaker. This direct current sets up a powerful magnetic field around the end of the iron core, and across the turns of the small movable cone coil.

Then when pulsating or alternating current from the receiver output is passed through this small coil, the reaction between the flux of its turns and that of the field magnet exerts a varying force to vibrate the small coil.

As this coil is attached to the cone it causes the cone to vibrate also. The edge of the cone is cemented to a flexible soft leather or buckskin ring or edging, which in turn is fastened to the frame ring of the unit. See the lower view in Fig. 108.

The cones are often ribbed or corrugated as shown in the two upper views in Fig. 108. The

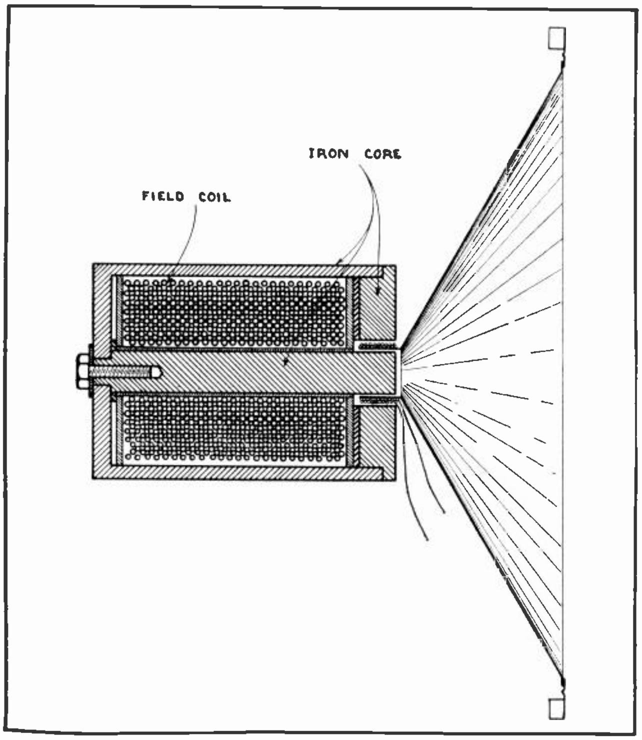

Fig. 109. This sketch shows the construction of a dynamic speaker. Note the large field coil, the small cone coil, the core, cone, etc.

rectifier units can be seen attached to these two speakers.

The large coil of a dynamic speaker not only serves as a field coil, but also acts as a very effective filter choke to smooth out the ripple in the D. C. from the rectifier. When these units are built into a radio receiver, this coil often serves as one of the choke coils in the power pack filter. When used with a separate rectifier of its own, the speaker is equipped with filter condensers connected across its own field coil as a filter choke. Fig. 110 shows a dynamic speaker with its field coil connected in series with the B— return lead of the power unit, and serving as one of the filter chokes.

The voice coil or cone coil is connected to the secondary of the output transformer from the power tube of the receiver. The balance of the receiver is not shown.

Dynamic speakers are made in various sizes for ordinary receivers in homes and for power amplifiers in large halls, theatres, etc. Dynamic reproducer units are also made for use with large horns of the type extensively used in sound picture and public address systems.

It has been found that long throated horns of special design are ideal for handling large volumes of sound in "power jobs".

Fig. 111 shows several horns of this type with both round and square openings. These horns are known as **exponential** and **orthophonic** types, according to their shape and design. Some of the large ones have a "tone travel" or length of 12 feet or more.

Another type speaker which has been used to a limited extent is known as the **electrostatic** or **condenser** type. These speakers consist of two thin sheets of metal with a sheet of insulation between them, or in some cases one thin slotted plate of aluminum on one side of the insulator and a sprayed metallic coating on the opposite side.

When the pulsating voltage output of the receiver is applied to these plates it causes the movable one to vibrate due to electrostatic attraction between them. A D. C. bias of several hundred volts on their metal surfaces often improves the operation of these speakers.

Condenser type speakers reproduce very faithfully all notes of music, with very little of the distortion which some other types of speakers produce.

88. CONSTRUCTION OF RADIO RECEIVERS

It used to be quite common practice for people with a general knowledge of radio to build their own receiving sets, both for the novelty and experience and to save something on the cost. Radio men also made a practice of building sets for their customers.

This practice has been largely discontinued, however, because numerous manufacturers are now turning out all kinds of receivers in attractive cabinets, and cheaper and better than the average individual can build them.

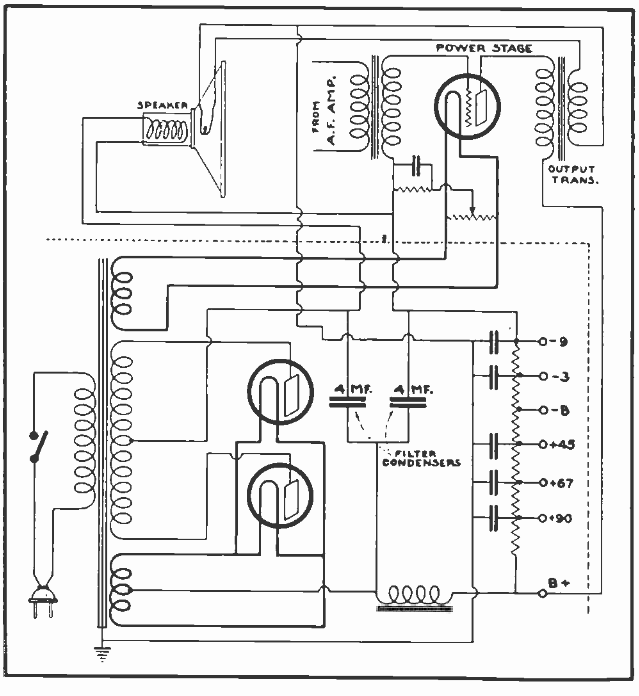

Fig. 110. Diagram of a power supply unit, dynamic speaker, and the last stage of power amplification of a receiver. Note that the field coil of the speaker is connected in series with the negative lead of the D. C. plate supply and serves as one of the filter chokes. Also note the connection of the cone coil, or "voice coil," to the secondary of the output or speaker coupling transformer.

A general knowledge of the proper methods of set construction may be very useful to the trained radio man, however, in case he may desire to build experimental radio equipment or special custom made sets to orders of customers, and it is also useful in making repairs to defective sets.

One of the first rules for building a good receiver or amplifier is to use good parts. Good quality transformers, condensers, and tubes should give efficient and dependable operation if carefully assembled and wired in a good circuit.

Parts should always be neatly and carefully arranged according to their order in the circuit, to keep the connections as short as possible, and yet have proper spacing between parts to prevent interference.

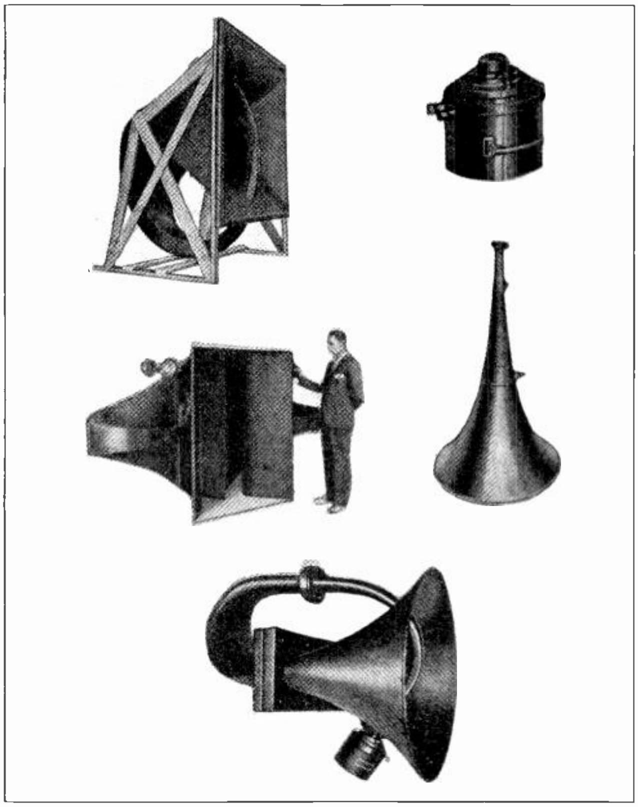

Fig. 111. Several types of large power speaker horns, and a large dynamic reproducer unit such as used with these horns. Horns of the above type are called exponential and orthophonic horns according to their design.

Transformers, sockets, and stationary parts are usually lined up on a base or sub-panel of wood, bakelite, or metal. Wood has the advantage of being easy to mount and fasten the parts on it, while metal aids in shielding the parts and provides convenient common ground connections for various parts of the circuit.

The sub-panel is very often mounted several inches above the bottom edge of the front panel to permit parts to be mounted both above and beneath it for compactness of the set.

A vertical front panel of bakelite or metal is generally used for mounting the variable condensers, tuning controls, rheostats, etc.

R. F. transformers and parts should be spaced several inches apart, or else shielded from each other by enclosing them in partitions or "cans" of sheet copper or aluminum from 1/32" to 1/16" thick. Proper shielding enables the set to be more compactly built and prevents interference between parts and stages. Shields should surround the parts as completely as possible, in order to entirely prevent inductive interference and distortion.

Never use iron or any magnetic materials, or any very thin high resistance metals for shielding. Shields should be kept about an inch from the sides of R. F. coils and two inches from their tops.

Parts in separate circuits or stages should be enclosed in separate shielding compartments. Any parts which are mounted on the shields should be carefully insulated from them unless the part is supposed to be connected or grounded to the shield, in which case a secure dependable connection should be made.

Take particular care to see that any uninsulated wires or terminals do not touch the shields. See that all shields are well fitted and fastened securely so they cannot vibrate, and see that they are all well grounded. The grounded metal chassis and shields of modern sets are generally used as a common ground for all negative return leads.

If audio transformers are not shielded and are to be mounted very close together, it is well to mount them with their cores at right angles to each other to prevent linking of their fields.

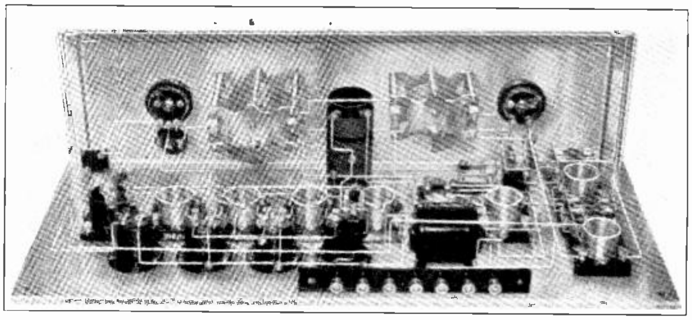

Fig. 112. This view shows the wiring and parts arrangement of a battery operated receiver, which is very easy to construct.

89. WIRING

Radio set wiring was formerly extensively done with stiff, bare, nickel plated copper wires of about No. 14 B & S gauge, known as bus wire. This form of wiring properly done makes a neat and impressive appearing job, but it is no better and in some cases not as good as the wiring with flexible rubber covered wires which is used almost exclusively in modern sets. Fig. 112 shows a neat job of bus wiring and neat arrangement of the parts of a battery operated set.

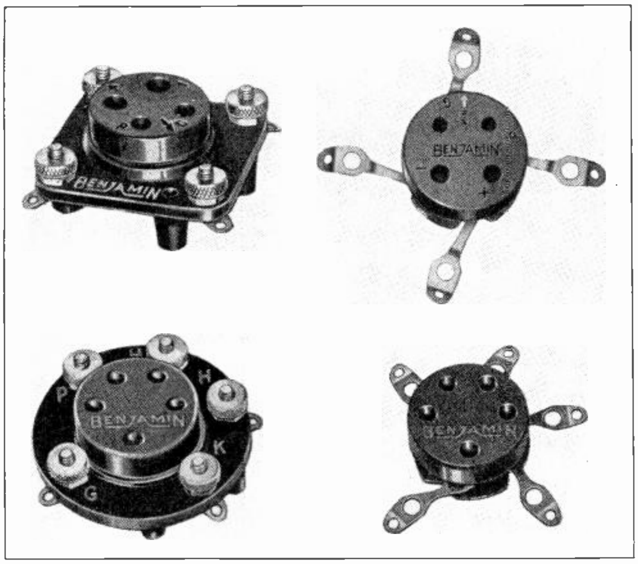

Fig. 113. Several types of tube sockets for both four and five prong tube bases. Note the connection terminals and soldering lugs for securely attaching the wires. (Photo courtesy of Benjamin Electric Mfg. Co.)

The flexible wiring is much quicker and cheaper, is more compact, and fully as efficient if properly done. The wire used for this purpose is usually a flexible wire of number 14, 16, or 18 size, and insulated with rubber but no braid.

All joints and connections whether made between wires, or between wires and terminals on parts and devices, should be carefully and securely made, and then well soldered. This is extremely important because the energy in some of the circuits is so small that any appreciable resistance in the connections will greatly reduce the efficiency of the receiver. It is also important because joints or connections which work loose even slightly, will cause a lot of crashing and sputtering noises in a receiver when the set or wires are vibrated or jarred.

Radio parts are usually equipped with connection terminals or soldering lugs. Fig. 113 shows several modern tube sockets with their soldering lugs and terminal nuts for attaching the wires to them. Fig. 113-A shows several filament rheostats with terminal, nuts or "binding posts".

When soldering joints and connections in radio receivers or amplifiers, always use a good non-corrosive flux, and take pains to do a neat and thorough job. Make sure the splice is well cleaned, heated, and fluxed so that the solder when applied will flow freely and neatly, and make a permanent low resistance connection. "Resin joints" or soldered connections which appear good on the outside, but from which the flux was not thoroughly heated or boiled out, are often the cause of failures in radio receivers.

When wiring a receiver never run grid and plate wires parallel or close to each other, on account of the objectionable feed back coupling and distortion this will cause. Also avoid running parallel to each other any conductors which carry high frequency currents, unless these wires are separated an inch or more apart, or are shielded.

Fig. 114 shows a rear view of a factory made receiver chassis with its power unit and loud speaker mounted on a separate base. Note the shielding of the R. F. transformers located to the right of the tuning dial, the gang condensers on the left, and also the shields around six of the tubes. The audio frequency transformers, some other small parts, and most of the wiring, are located under the sub-panel.

Fig. 115 shows a front view of another factory made A. C. set. The power pack is on the left and the gang condensers with the front of their shield removed, are shown to the right of the tuning dial. Note the arrangement of the shielded tubes and R. F. transformers at the rear. The tube shields can be distinguished by their perforations to let out the heat. The non-perforated "cans" contain the R. F. transformers. The A. F. transformers are under the sub-panel on this set also.

Fig. 116 shows still another arrangement of tubes, R. F. transformers and shielding of a factory built chassis. Note the power transformer, tubular electrolytic filter condensers and rectifier tubes of the power pack on the left. Also note the screen grid tubes, distinguishable by their top connections, the large power tube at the rear, the tuning condensers, tuning dial, etc.

Fig. 117 shows the under side of the sub-panel of

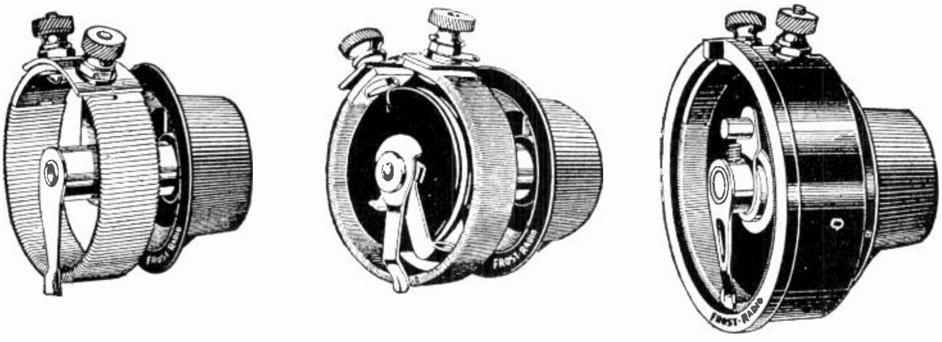

Fig. 113-A. Above are shown several types of variable resistors such as are used for filament rheostats, volume controls, biasing potentiometers, etc.

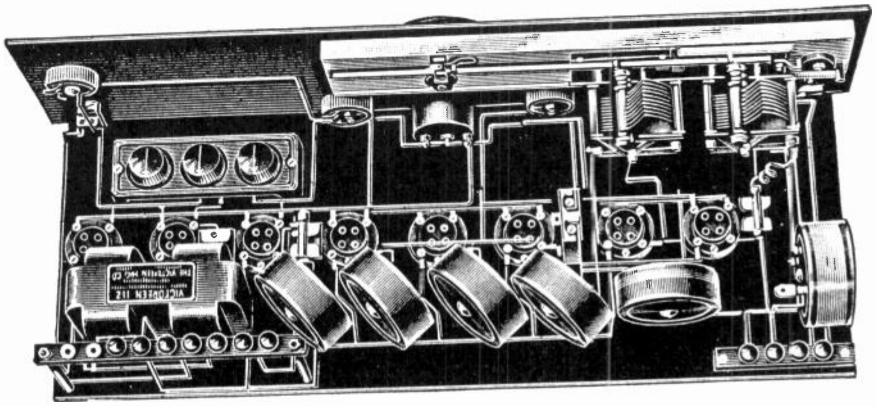

Fig. 113-B. This view shows the wiring and parts arrangement for a superheterodyne radio receiver in which the parts are all mounted on the top surface of the baseboard and on the rear of the front panel. The round coils shown in the foreground are R. F. and I. F. (intermediate frequency) transformers. Shielding from "body capacity" effects between the tuning condensers and the operator's hands, can be made in a set of this type by placing a sheet of aluminum or copper on the back of the vertical panel, between it and the condensers. If this is not done body capacity sometimes causes detuning and howling.

one type of chassis and a great deal of the set wiring.

These various views just shown give a general idea of the type of construction, wiring, and shielding used in modern factory built sets. You can readily see how sets of this type should if properly built, give better results than home made sets will, unless considerable time and trouble is spent on the shielding and wiring of the home built receiver.

Many good receivers, amplifiers, and special experimental radio devices can be built on wood panels in the home or small shop, however, if the parts are properly spaced, or shielded, and if the general rules just given are carefully followed.

90. TESTING AND SERVICING RECEIVERS

One of the best fields of opportunity in which the radio man can profitably apply his knowledge, is in the testing, servicing, and repairing of radio receivers in homes, and speech amplification equipment in theatres, schools, hotels, etc. There are millions of radio set owners who really don't know much about their sets or what to do when they go wrong, and a radio service man who builds a good reputation in his community for being able to quickly locate and correct troubles in these sets, will usually find his services in demand.

Radio manufacturers and dealers, department stores, hardware and electric shops that handle radios, are generally glad to find and hire a really good radio service man.

Radio trouble shooting and service work are both easy and interesting for one who has a good general knowledge of radio principles and devices, and a thorough knowledge of electricity and circuit tracing and testing. Your practical shop training in these subjects here at Coyne, and a careful study of the material covered in this reference set, should well fit you for capable work in this line.

When starting to look for any trouble in a radio receiver, always use a definite systematic method of testing for fault location, and keep in mind what we have emphasized before, that any trouble or fault can be located by careful and systematic testing.

91. COMMON TROUBLES

There are a great many possible causes of trouble in radio sets, but the most frequent and common troubles are caused by only a few things such as defective tubes; weak batteries; failure of power supply; broken, loose, corroded and high resistance antenna or ground connections; defective condenser or transformer; or an open circuit, short circuit, or ground in the set wiring.

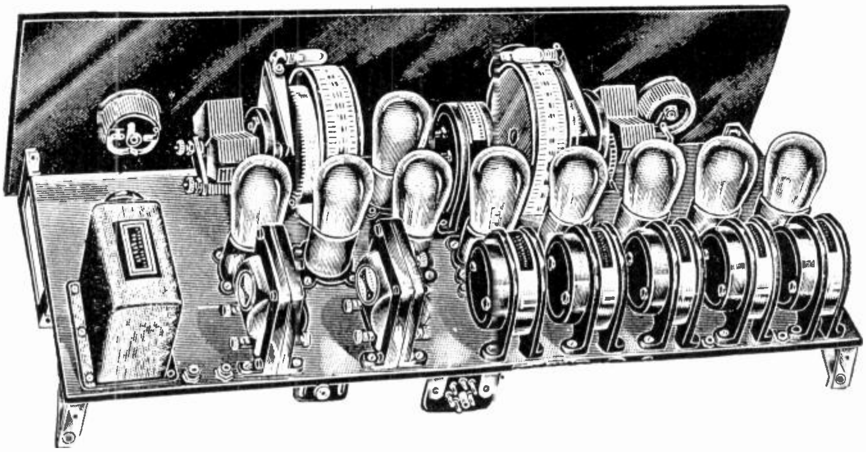

Fig. 113-C. This view shows the parts arrangement in a superheterodyne set using a raised sub-panel beneath which the wiring is done. This makes the wiring much more convenient, and when a metal sub-panel is used it shields the wiring from the parts and devices of the set. The I. F. transformers, A. F. transformers, tubes, tuning condensers, tuning dials or drums, rheostats, and oscillator coupling coil can all be clearly seen in this view.

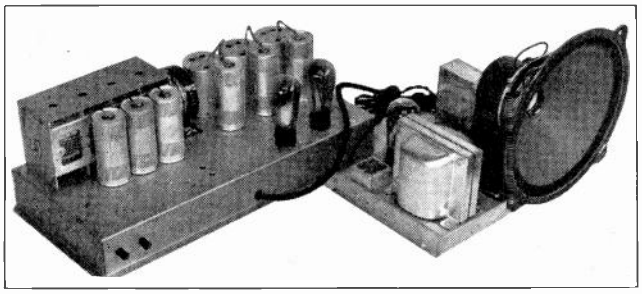

Fig. 114. Photo of a factory made A. C. receiver, with a metal chassis and thoroughly shielded parts. The dynamic speaker and power supply unit are also shown in this view. (Photo courtesy of Silver Marshall Inc.)

Defective tubes are the most common cause of trouble in all kinds of receivers. Weak, discharged batteries or corroded battery terminals are one of the most common troubles in battery operated sets, and poor antenna and ground connections are also frequent causes of poor operation. In many cases the service man finds it only necessary to replace or tighten a plug in the convenience outlet, or to turn on a switch on the power unit or in the light circuit, to put the set back in operation. So these common things should be carefully checked before spending much time looking for more complicated troubles.

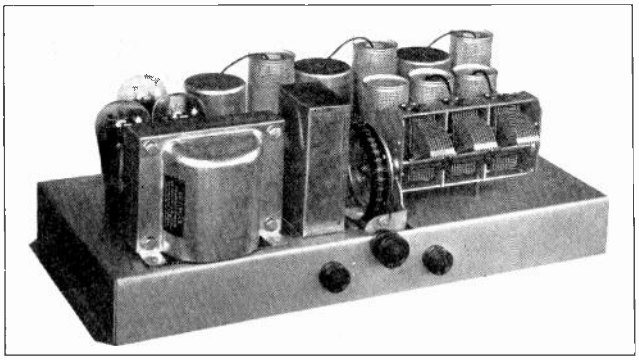

Fig. 115. This photo shows another view of compact, factory made receiver with the power unit located on the left. Note the arrangement and shielding of parts. The wiring, A. F. transformers, and some other small parts are located beneath the sub-panel. (Photo courtesy of Silver Marshall Inc.)

92. TEST EQUIPMENT. SET ANALYZERS

Radio service work does not necessarily require a lot of expensive test equipment, as most troubles can be found with a low voltage test lamp and battery, a portable voltmeter or ohmmeter, and a tube tester. A good set analyzer is a great help and time saver, however, and any service man who is doing much of this work should by all means have one.

Fig. 118 shows a popular type of set analyzer with which practically any service test can be made on a radio receiver. There are a number of these devices on the market, ranging in price from $20.00 to $100.00 or more, for the very complete types.

In general the set analyzer consists of a voltmeter with several scales for reading low and high voltages, an ammeter with several scales for reading amperes, and milliamperes, one or more sockets for inserting and testing tubes from the radio set, a plug and adapter for inserting in the various tube sockets of the receiver and testing the condition of each stage, a small dry battery for supplying test voltages, a set of test prods or points with their flexible leads for making continuity tests in the wiring, and the various terminals and control buttons for obtaining the different readings. Each of these various parts can be seen in Fig. 118.

The various meter readings of millivolts or volts, and milliamperes or amperes for the different parts of the circuit under test, can be obtained with the multiple scale instruments by pressing the proper switches on the panel to connect the proper resistances in series with the voltmeter and the proper shunts across the ammeter. Some set analyzers have a greater number of meters, with single scales for separate test readings.

Set analyzers are very convenient for locating weak or defective tubes by testing them one at a time in the analyzer socket and taking meter readings of the filament current, grid voltage, plate voltage and current, and thus determining the exact condition of the tube. They are also a great time saver in determining what stage of the receiver a fault is located in, by starting at the R. F. end, with the set in operation, removing one tube at a time and placing the plug of the analyzer in the socket from which the tube is removed, and noting the readings or output of each stage in this manner.

Set analyzers are usually supplied with an accompanying trouble chart and test directions supplied by the manufacturers. By following these instructions for any particular analyzer until one gets used to the instrument, it is very easy to make the various service tests with it.

Some manufacturers of set analyzers also supply convenient test data charts such as shown in Fig. 119, for various common makes of radio sets. These are very helpful in making quick and accurate comparisons throughout the set, stage by stage. If these

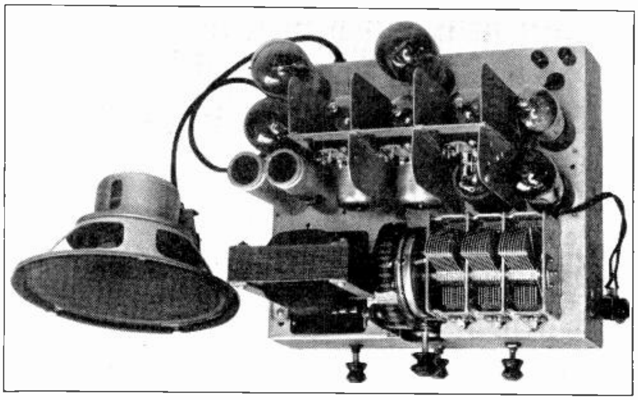

Fig. 116. This photo shows a top view of an A. C. receiver of still different construction and shielding than either of those shown in Figures 114 or 115. (Photo courtesy of Silver Marshall Inc.)

charts are not supplied with the set analyzer they can usually be obtained, along with a circuit diagram for any particular receiver, by writing to the manufacturer of that receiver. Every radio service man should have this material on hand for the sets he is most frequently servicing.

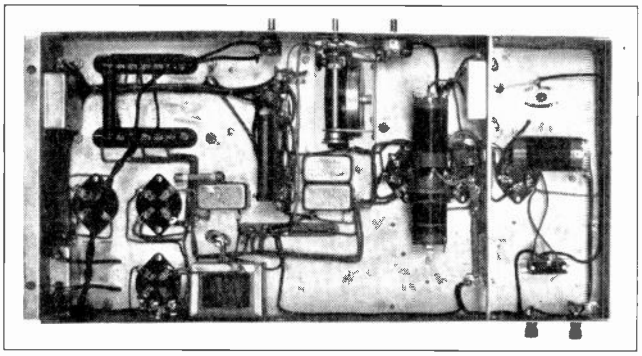

Fig. 117. This view shows the under side of the sub-panel of a modern factory made receiver. Note the wiring and parts which are conveniently arranged beneath this panel. (Photo courtesy of Silver Marshall Inc.)

93. CLASSES OF FAULTS, AND GENERAL SYMPTOMS AND TESTS

Common radio set troubles can be divided into four general classes as follows: 1. Complete failure to produce signals; 2. Signals weaker than normal; 3. Signals distorted from normal tone quality; 4. Noisy reception.

In some cases more than one of these troubles occur at the same time. When a set gives abnormally weak signals, distortion and noise will often accompany them.

Distortion can be divided into several different kinds as follows: Loss of low notes, producing "tinny" high pitched reproduction; coarse or rattling reproduction; loss of high notes, producing muffled reproduction.

Noise can be divided into the following types: Hum, static, motorboating, whistling or squealing, and microphonic noise.

Experience and practice will enable one to recognize certain common radio troubles by the sounds or symptoms they cause. For example there is a certain characteristic howl of a microphonic tube; a certain type of hissing and crackling noise caused by weak A or B batteries; certain classes of distortion due to defective tubes in detector or first A. F. stages, or defective A. F. transformers; low pitched 60 cycle hum due to defects in power supply unit, defective bypass condenser or open grid circuit on first A. F. tube. Other symptoms of this nature will be explained later.

In starting to locate trouble in a radio receiver, if some familiar symptom does not indicate just about where the trouble is, you should first make a quick general examination of the tubes, antenna and ground connections, batteries if used, plug, cord and 110-volt power supply if used, speaker connections, etc.

If this general examination does not show up the trouble, you should then try to localize the trouble and determine whether it is in the antenna circuit, R. F. stages, detector, A. F. stages, power unit, or speaker.

If no signals are obtainable from the set, the trouble will usually be found in some part of the antenna circuit or in the power supply.

If all the tube filaments light and if a noticeable click is heard in the speaker when the rectifier tube is removed from its socket, it is quite likely that the power supply is all right, and that the trouble is probably in the aerial circuit. The click heard when the rectifier tube is removed indicates that the plate circuits of the receiver tubes are supplied with power.

If all but one or two tubes light up, those which do not are probably burned out, although their failure may also be due to an open in some part of the filament wiring.

If any of the tubes in an A. C. receiver light up to their normal brilliancy it indicates that the primary of the power transformer is all right.

The power supply unit is a very vital part of the receiver and is more apt than almost any other part to cause complete failure of the receiver.

In case weak signals are heard and the selectivity and sensitivity of the set are poor, the trouble is usually in the R. F. stages. A simple test to determine whether the trouble is in the R. F. or A. F. stages, is to lightly tap the detector tube with a

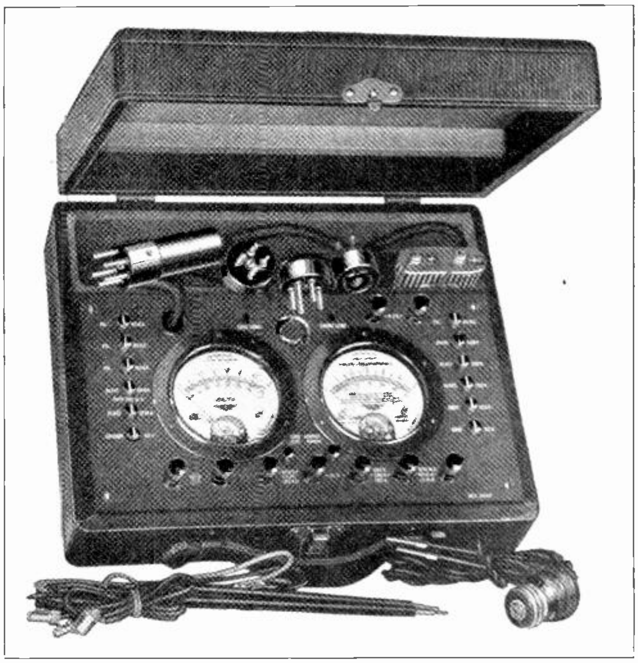

Fig. 118. Convenient test kit or set analyzer for shooting trouble and making accurate fault location tests on radio receivers. Instruments of this type are very useful to the modern radio service man. (Photo courtesy of Jewell Electrical Instrument Co.)

pencil or finger nail. If this produces a ringing note in the speaker, it is a fairly good indication that the A. F. stages are functioning properly, and we can look for the trouble in the R. F. stages.

If the signals are noisy and distorted from their natural tone the cause of the trouble will usually be found in the A. F. stages, although either the aerial system or R. F. stages may at times be to blame for noise and distortion.

After one becomes familiar with the various forms of distortion you can usually determine about where the trouble is.

TUBE NO. IN ORDER ①	TYPE OF TUBE ②	POSITION OF TUBE 1ST RF DET ETC ③	READINGS. PLUG IN SOCKET OF SET									
			TUBE OUT		TUBE IN TESTER							
			A VOLTS ④	B VOLTS ⑤	A VOLTS ⑥	B VOLTS ⑦	C VOLTS (CONTROL ⑧ GRID)	CATHODE - HEATER ⑨ VOLTS	NORMAL PLATE ⑩ M.A	PLATE M.A. GRID ⑪ TEST	PLATE CHANGE ⑫ M.A.	SCREEN GRID ⑬ VOLTS
1	224	1st RF	2.15	152	2.1	140	3	3	2.6	5.6	3	76
2	224	2nd RF	2.15	152	2.1	140	3	3	2.6	5.6	3	76
3	227	Det.	2.15	84	2.1	82	14	14	1	-	-	-
4	227	1st A	2.15	140	2.1	80	3	3	2.1	3	.8	-
5	245	2nd A	2.4	228	2.45	208	38	-	22	26	4	-
6	245	2nd A	2.4	228	2.45	208	38	-	22	26	4	-
7	280	Rect.	4.3	-	4.1	-	-	-	64	-	-	-
8												
9												
10												

Fig. 119. Convenient data charts for making continuity tests with set analyzers, can be obtained from the instrument manufacturers or from the makers of the receiver to be tested. These charts are a great aid to the service man.

If the audio stages are suspected, a simple test to determine if the fault is there, can be made by removing the detector tube from its socket. If the noise still continues the trouble is in the A. F. stages. It does not, however, always indicate that the audio stages are allright if the noise stops upon removal of the detector tube.

If all the tube filaments light, but we nevertheless suspect that a defective tube is the cause of the trouble, if no set analyzer or tube tester is available the tubes can be changed around or replaced one at a time with a good one, until the defective one is located.

94. LOCALIZING THE TROUBLE

If a receiver does not operate or give any signals at all, then a definite systematic inspection and test is necessary to locate the trouble. Before starting detailed tests of the internal parts and wiring of the set, always remember to carefully check the antenna circuit, tubes, power unit or batteries, and the speaker.

In checking the antenna circuit make sure that the antenna and ground connections are clean and tight at the set, and that the ground connection to the water pipe or ground rod is also clean and tight. See that the antenna is not down, or grounded by contact with some other wire or metal structure.

See that all tubes light or burn, but remember that the filaments of modern A. C. tubes do not need to light up brightly, but only glow a dull red. Test the tubes in a set analyzer or tube tester, or by replacing them with good tubes. If all tubes fail to light the trouble is almost certain to be in the A battery, power unit, or filament switch or wiring, although it is possible that all tubes are burned out due to some wiring defect or wrong connection having placed the "B" voltage on their filaments.

In checking the A battery, test it with a hydrometer for state of charge, and carefully check for corroded terminals. In checking a power pack, first see that the light circuit to which it is plugged is alive, by testing with an A. C. voltmeter or 110 volt test lamp. Examine the cord to see that the wires are not broken under the insulation, and see that the plug and all connections are tight. Test the filament voltage supply terminals with a low reading voltmeter and the plate voltage supply terminals with a higher reading voltmeter.

In checking the speaker, see that its cord is not broken or shorted, and see that the connections both at the output of the set and at the speaker unit are secure. See that the diaphragm or cone is not jammed or badly bent. If the speaker is of the dynamic type the field coil can be tested by holding a nail, screwdriver or some magnetic object, near the end of the iron core inside the cone, while the set is turned on. If the coil is alive a strong magnetic pull will be felt. Examine or test the flexible fine wire leads to the cone coil as these often get broken.

An ordinary magnetic speaker having only two leads can be quickly tested by tapping its terminals on a B battery, which should result in a loud click. With dynamic speakers the same test can be made with the cone coil leads, assuming of course that the field coil is supplied with power and is energized. Do not leave the speaker connected to a B battery or its coil may be burned out.

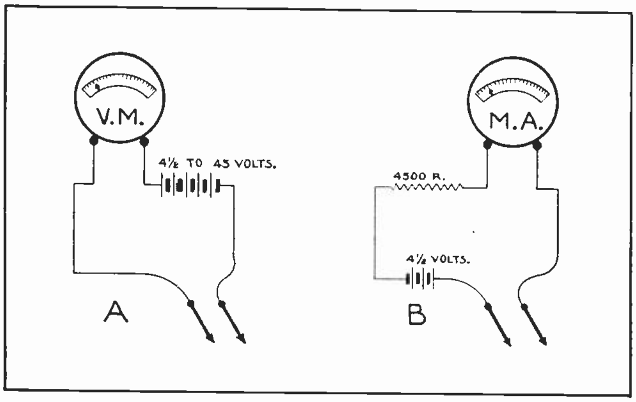

Fig. 120. The sketch at A shows the connections for using a low reading voltmeter for making continuity tests, and the one at B shows the connections for using a milliammeter for this purpose.

95. CONTINUITY TESTS

If the antenna circuit, tubes, batteries or power pack, and speaker all test O. K., and the set still refuses to operate, then we must make a thorough test of the set itself, starting at the antenna and ground terminals or primary of the first R. F. transformer, and proceeding straight through to the output or speaker terminals.

This test should include every device in the set, such as transformers, R. F. and A. F., condensers fixed and variable, resistors, rheostats, potentiometers, sockets, wiring joints, etc., to determine whether there are any open circuits, high resistance connections, short circuits or accidental grounds in any of the devices or wiring.

A test of this nature is known as a **continuity test,** as it tests the continuity of each circuit and determines whether the circuits are continuous and in normal condition or not. A continuity test is the surest and best method of locating some elusive fault that cannot be found by the general tests or inspection so far explained.

Fig. 120-C. Convenient Ohmeter or circuit tester which is also very valuable for continuity testing and radio trouble shooting. (Photo courtesy of Weston Electrical Instrument Co.)

Continuity tests can be made with set analyzers which are provided with test leads and points that can be attached to the terminals of a voltmeter or milliammeter in the analyzer, and with a small "C" battery in series to produce the readings.

If no set analyzer is available, continuity tests can be made with a small portable voltmeter and test leads and prods, with a C or B battery in series as shown in Fig. 120; or with a low reading milliammeter having a scale for 0 to 1 milliamperes, in series with a "C" battery, resistor, and the test points, as shown in Fig. 120-B. A portable ohmmeter with a self contained 1½ volt flashlight cell is also a very convenient instrument for making continuity tests. Fig. 120-C shows an instrument of this type with a double scale for both low and high readings.

In making continuity tests a circuit diagram of the receiver should be referred to unless you are thoroughly familiar with the set, and each circuit should be tested to see that it is complete and that its resistance is normal, or what it should be for that circuit or device when in good condition. Here again is where the continuity test charts supplied by manufacturers are a great help to the service man. These charts show the readings which should be obtained on every test and are a valuable guide and time saver if carefully followed. For this reason the service man should have this data on all sets he is commonly working with.

In testing a circuit make the test thorough and complete from its start to finish, as each wire and device in every circuit has a function to perform and it requires only one invisible open, short, ground, or high resistance connection to prevent proper operation of the entire receiver.

As each device, circuit or stage of a receiver is tested and found to be normal, that part can be eliminated as a possible cause of the trouble.

Before starting a continuity test the receiver should be disconnected from the batteries, or if it is an A. C. receiver its power supply plug should be removed from the 110 volt socket or receptacle, so the receiver will be entirely dead. This is necessary to prevent obtaining false readings and also to prevent possible damage to the test instrument or receiver tubes, when various wires and leads are touched with the test points.

When a milliammeter is used for continuity testing the resistor or the battery voltage should be adjusted so that when the test prods are shorted together the meter will give nearly full scale reading. Then when testing across wiring joints or connections or at the terminals of low resistance coils or devices the reading should still be nearly full scale. When testing very high resistance devices such as potentiometers, grid leaks or coupling resistors of

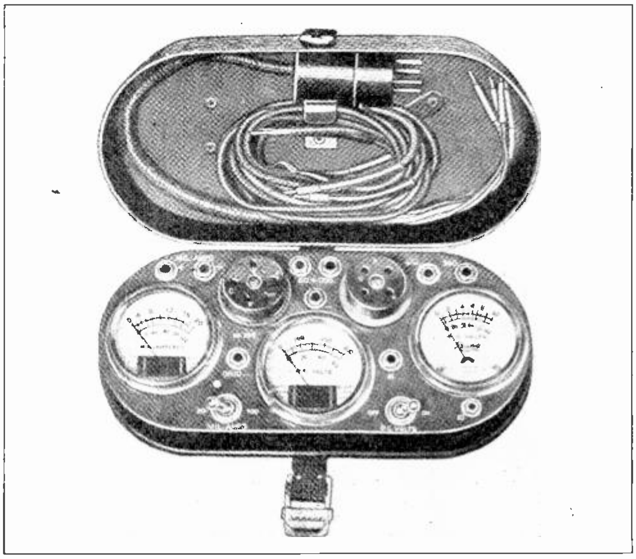

Fig. 121. Another type of small and convenient radio test instrument which is less expensive than some of the larger testers.

thousands of ohms resistance, the reading will drop in proportion to the resistance. The resistance of windings of R. F. or A. F. transformers is not high enough to make much difference in the reading of a 0 to 1 milliammeter. An open circuit will give no reading. A good condenser will show no reading when tested with a milliammeter and battery. If the milliammeter shows any reading on a condenser it indicates that the condenser is shorted. If it is a fixed condenser it must be replaced. If it is a variable condenser the trouble may be corrected. Condensers should always be disconnected from their circuit before testing or a false reading will be obtained from attached closed circuits.

When using a voltmeter for continuity tests the meter should be of the proper rating or design to give a full or nearly full scale reading with the voltage of the battery used, when the test points are shorted together. When the test points are then applied to circuits and devices the reduced meter reading indicates the voltage drop through them. Testing across wiring joints or terminals or across R. F. coils or transformers and other low resistance devices, should show no appreciable voltage drop unless there is some high resistance fault or open circuit in them. An open circuit will give no reading at all on the voltmeter. Windings of audio transformers and chokes are high enough resistance to show a little drop from full scale reading, but if the meter shows a considerably lower reading on them, it indicates a high resistance connection.

When testing very high resistance devices such as potentiometers, grid leaks, and resistors of many thousands of ohms, the voltmeter will show considerable voltage drop by a much lower reading.

When using an ohmmeter for continuity testing, the instrument reads directly the resistance of any circuit or device being tested, and thus gives very reliable and easily understood indications. After performing a number of continuity tests one gets to know just about what readings to expect from the tests on various devices in good condition, even without the manufacturers data, and even though the readings may vary slightly on different makes of equipment.

96. MECHANICAL TROUBLES, AND GENERAL

All moving parts such as variable condensers, rheostats, potentiometers, etc., in defective radio receivers, should be carefully examined for damage due to mechanical wear, or for parts or flexible connections having become loose.

Variable condensers should also be checked to see that none of the plates have become bent so they touch, or that dirt of a conductive nature is not partially shorting the plates. Bent or rubbing condenser plates will usually be indicated by a harsh scratching sound when the condenser is rotated during operation of the receiver.

Very weak signals are often caused by gang condensers being out of balance, and in such cases they should be carefully re-balanced by adjusting the small single plate balancing or trimming condensers while listening to the output reception of a local station, or with the set excited from a modulated oscillator. An output meter on a set analyzer is a great help to balance condensers more accurately.

Spring contacts in tube sockets sometimes become bent or corroded so that they do not make contact, or only make a poor high resistance connection to tube prongs. These contacts can usually be bent back into firm connection with the tube prongs, and cleaned with a narrow strip of sandpaper or emery cloth held over the end of a flat pointed stick. Sometimes, on tubes in the old style sockets where the tube prongs only make contact at their tips, these tips may need to be brightened and have corrosion removed from them by moving the tube back and forth in the socket, or by removing it and lightly polishing the prong tips with fine sandpaper or a fine file.

Audio transformers sometimes develop open circuits due to corrosion from soldering flux eating away the fine coil-lead wires near their terminals. A transformer with an open or burned out winding should be replaced with a new one of the same type and ratio.

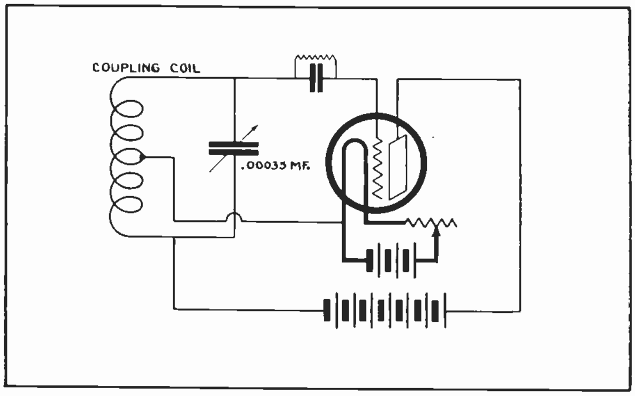

Fig. 122. Circuit diagram of a portable modulated oscillator which can be easily and cheaply made and is very useful for testing, balancing, and neutralizing radio receivers.

97. TUBE AND VOLTAGE TROUBLES

When testing the plate voltage, plate current, grid voltage, and filament voltage of tubes with an analyzer or test instrument, these values should be very close to those given in the manufacturers test data for the tubes. The plate current may, however, vary some for the same tubes when used in different receivers, but if it is very much off there is probably some fault causing it.

Some of the common causes of wrong voltage and current on tubes are as follows: Excessive plate current may be caused by too high plate voltage; too low grid bias voltage; too high filament voltage; leaky condenser or poor circuit insulation; or a defective tube. Insufficient plate current may be caused by too low plate voltage; grid bias voltage too high; low filament voltage; or defective tube.

If a test with a meter shows that the plate voltage is excessive this may be due to an open circuit in the negative end of the voltage divider in the power unit, to excessive negative grid bias; to low filament voltage; or a defective tube. Too low plate voltage may be due to failure of the power supply unit; low negative grid bias; too high filament voltage; or a defective tube.

If the grid biasing voltage is found to be too low, too high or reversed, this may be due to an open circuit at the "C" battery or bias resistor; a shorted bypass condenser across the "C" battery; leaky insulation or blocking condenser between grid and plate supply circuit; open transformer secondary in the grid circuit, or a defective tube socket.

If the filament voltage is wrong it may be due to a weak A battery or loose, corroded connections; a faulty or poorly adjusted A eliminator; an overload or partial short on the filament circuit; or improper line voltage on the house circuit to which the power unit is plugged.

A defective tube may cause wrong readings due to loss of vacuum, which will generally cause a bluish glow in the tube; a dead or deactivated filament; or to a short circuit in the tube, caused by the grid touching the plate or filament.

Some tubes are very microphonic and produce a howl at the speaker every time the receiver is vibrated slightly. This vibration causes a loose filament or grid to vibrate, and the changes in spacing between them and the plate cause corresponding plate current variations and sound. Microphonic tubes should be replaced, or a temporary remedy can be effected by fitting a piece of heavy rubber hose or inner tubing tightly over the top of the tube to dampen its vibrations.

98. COMMON TROUBLES IN R. F. STAGES, DETECTOR, AND AUDIO STAGES

Lack of sensitivity in the R. F. stages of a receiver may be caused by poorly balanced tuning condensers; an open or shorted R. F. transformer coil; open or shorted bypass condenser; defective tube; wrong filament, grid, or plate voltages; or a high resistance antenna or ground connection. Dampness or moisture absorbed by R. F. coils and condensers may also be a cause.

A continuity test will usually locate any faulty device or circuit, and repairs or replacement can be made according to the nature of the trouble.

Broad tuning or lack of selectivity may be due to most any of the causes of poor sensitivity just mentioned; or it may be due to too long an antenna; wrong "C" bias voltage on the tubes; or to some trouble in the circuit or volume control. Sometimes broad tuning is blamed on the receiver when it is really caused by some powerful local station.

Fig. 123. This photograph shows a service man on the job with a set analyzer, making trouble tests on a radio receiver.

In such cases if the undesired station cannot be tuned out by the receiver when it is in good condition and fairly selective on other stations, a **wave trap** consisting of an auxiliary tuner or variable condenser and inductance, can be shunted across the antenna and ground terminals of the receiver and used to tune out the undesired station.

Oscillation in R. F. stages may be due to poor shielding; careless wiring; defective volume control; set not neutralized; bad tube; or wrong voltages.

Foreign noise in R. F. stages is generally due to loose connections in the wiring, or at the terminals of condensers, sockets, rheostats, etc.; or to loose shield cans; rubbing condenser plates; or defective volume controls or filament rheostats.

Trouble in the detector circuit may be due to a defective tube; wrong voltages; loose connections; wrong grid leak resistance or C bias, etc.

Lack of sensitivity in detectors is often due to a bad tube; wrong plate or filament voltages; or an open circuited grid lead, condenser or "C" battery.

Noise from the detector may be caused by a microphonic tube; dirty or loose tube socket connections; poor or loose grid leak resistor, etc. Too high resistance in the grid leak will cause "motor boating", or a put, put, put, sound like an engine exhaust.

A. C. hum may be caused by poor shielding; lack of proper bypass condensers in grid and plate circuits; or to induction from nearby A. C. circuits.

Troubles in audio stages may be due to poor tubes; defective A. F. transformers; wrong voltages on tubes; defects in wiring; dead "C" battery;

defective bypass condensers, etc. An open transformer primary will cut off the plate voltage to the tube preceding it, or in whose plate circuit the primary is connected. An open transformer secondary will cut off the grid voltage to the tube following it, or in whose grid circuit the secondary is connected.

Open, shorted, or burned out A. F. transformers can be easily located by a continuity test, and should be replaced by ones of the same general type and the same ratio.

Loose connections in A. F. transformers are quite common and cause a lot of noise when the set is jarred or vibrated.

99. SPEAKER TROUBLES

Trouble in magnetic type speakers may be caused by loose connections; jammed or bent diaphragms or cones; loose armatures of the balanced type striking the pole tips; loose driving rod or parts; collection of iron filings or magnetic particles in the narrow gaps between poles and armature or diaphragm.

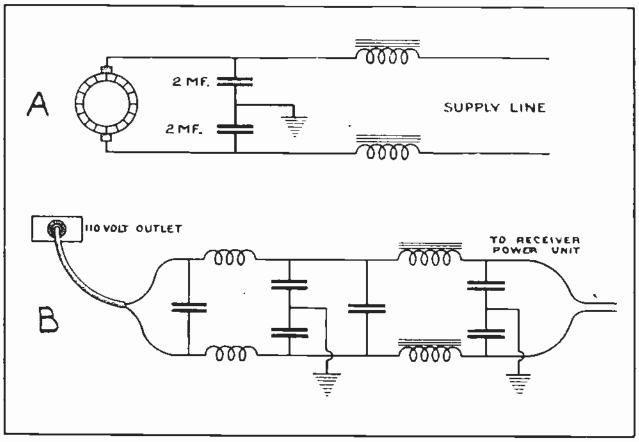

Fig. 124. Two types of filter circuits for interference elimination, or for reducing radio interference caused by electrical disturbances near the receiver.

Damaged cones or diaphragms usually cause a weak tinny sound, and when found should generally be replaced instead of trying to repair them. Loud chattering sounds are caused by the armature striking the pole tips. Rasping, scratching sounds are caused by dirt or magnetic particles rubbing on the armature or diaphragm. Light rattling sounds are generally caused by a loose driving rod or parts.

Poor volume may be due to a weak permanent magnet; open or short in a coil; or to defective insulation on the speaker cord. A broken connection at one of the electromagnet coils may cause a permanent open, or it may cause a lot of noise as the speaker vibrates slightly.

Trouble in dynamic speakers may be caused by an open field magnet coil; by failure of voltage supply to field coil due to defective rectifier tube, defective dry oxide rectifier, or defective filter condenser or transformer of separate speaker power supply unit. Dynamic speaker troubles may also be caused by a shorted or open cone coil; damaged cone; filings or dirt stuck between magnet and cone coil; or cone off center.

Failure of the field magnet coil is usually indicated by weak, raspy reproduction and almost no bass notes. This field magnet can be tested as previously mentioned by holding some clean iron object near its center pole to note the strong magnetic pull, if the coil is operating properly.

An open circuit in the cone or voice coil will stop all reproduction, and a partial short of this coil will cause reduction of bass notes and poor sound reproduction. These cone coils often become shorted by being off center and rubbing on the field magnet poles. Their flexible leads also become broken occasionally by vibration or abuse.

If iron filings are found in the magnetic gap they should be cleaned out by collecting them on a pointed magnetic tool, or with a stiff piece of paper. If necessary the cone can be removed and the filings and dirt wiped out with a cloth or brush.

If the cone becomes broken or damaged very badly it is usually best to replace it.

On dynamic speakers which have their own power units for supplying D. C. to the field coil, the rectifier tube may become defective or entirely dead, or the dry oxide rectifier, if one is used, may have reached the end of its useful life and if so should be replaced. A shorted filter condenser will cause failure of the current supply to the field coil, and an open circuited filter condenser will cause 60 cycle hum in the speaker. An open in the transformer or cord, or failure of the 110 volt supply will of course cause the speaker to fail.

Some dynamic speakers use a means of balancing out 60 cycle hum by feeding a small amount of the pulsating field current into the cone coil through a variable resistor. By adjusting this resistor the hum can be completely balanced out when the speaker is in good condition.

100. POWER SUPPLY TROUBLES

Troubles in power supply units may cause complete failure of the unit, wrong supply voltages, or bad A. C. hum.

Complete failure is generally due to an open in the 110 volt supply line or power transformer windings; to a defective rectifier tube; shorted filter condenser; or to an open circuit in a filter choke or in the wiring. A continuity test will locate any of these faults.

Wrong supply voltages may be caused by a bad rectifier tube; open circuit in the voltage divider resistance; shorted or open condensers or chokes; overload on the power unit due to shorts in the receiver; or to incorrect supply line voltage.

If the line voltage is too high or too low it can usually be corrected by adjustment of the line ballast resistor or taps in the circuit of the power transformer primary.

Rectifier tubes have a limited useful life and should therefore be tested or compared with a new tube when suspected of causing trouble.

Defective resistors, condensers or chokes should be replaced, unless the defect is merely a broken connection at the terminal.

101. MODULATED OSCILLATOR

We have mentioned that a modulated oscillator is a very useful device for exciting receivers with high frequency energy when neutralizing them, or when balancing gang tuning condensers and making comparative tests of any kind. These oscillators produce a high frequency wave that is modulated at an audible frequency, by the "spilling" action of the grid leak and condenser.

Portable oscillators of this type can be purchased, or they can be easily built at very low cost. Fig. 122 shows a connection diagram for a simple modulated oscillator using a 201-A or 301-A tube; grid leak and condenser; a simple center tapped inductance coil for coupling the grid and plate circuits for regeneration and oscillation, and also for inductively coupling the oscillator to the receiver; a tuning condenser for adjusting the pitch of the audible note; and the necessary A and B batteries and filament rheostat. The coupling coil consists of a center tapped coil of about 100 turns of No. 24 or 26 wire, on a tube or form about 1½" in diameter, and the tuning condenser is of .00035 mfd.

An oscillator of this type can be coupled to a receiver by merely setting it with the coupling coil close to the aerial lead of the receiver, or by setting it 15 or 20 feet from the receiver and running a wire from the coupling coil to any R. F. transformer coil, according to which stage you wish to test. The ends of the coupling wire can be just looped loosely around the sides of the coils, and capacity will give sufficient coupling through the insulation.

When using an oscillator of this type to balance the tuning condensers of a set the oscillator can be connected or coupled to the antenna circuit or first R. F. coil and adjusted to about 200 meters or 1500 kilocycles by setting the dial on the receiver at this point, and then adjusting the oscillator until it gives maximum sound at the speaker, or maximum reading on an output meter connected to the receiver in place of the speaker. If the maximum sound or reading is too great when the receiver and oscillator are tuned to resonance, reduce the filament temperature of the oscillator tube by means of its rheostat.

Now with the receiver operating from the oscillator, adjust the receiver gang condenser to maximum volume as indicated by the speaker or output meter. Then adjust each of the small balancing or trimmer condensers to the point where they give best results or increase the output to maximum. The condensers are then balanced for that wave length.

Next set the receiver dial at about 500 meters or 600 kilocycles and adjust the oscillator to resonance with it again. Once more adjust the trimmer or balancing condensers to get maximum output from the receiver. But when adjusting them this time, if it requires a change from their former setting to get best results, carefully note just how much change is required by counting the turns of the adjusting screw or noting their positions, and then set each trimmer back just half way between their best positions for the two different wave lengths. This will balance the gang condenser for best average results over the broadcast band.

The output meter mentioned, is simply an A. C. voltmeter which reads the signal variations or amplitude in the plate current of the receiver output.

102. INTERFERENCE

The radio service man is often called upon to locate and stop radio interference from sources outside the receiver, but which causes such a lot of noise or man-made static in the set that it makes good reception impossible.

Radio interference may be caused by nearby electrical machines or equipment, such as D. C. motors with sparking brushes, X-ray or high frequency machines, arc lights, gasoline engines with electric ignition, sign flashers, nearby power lines or A. C. circuits in the building, defective insulators on high voltage lines, or from other radio receivers which are in a state of oscillation.

Then of course there is also the interference from natural static or atmospheric electricity, and from powerful nearby radio transmitters. Even door bells and signal buzzers, and the switching on and off of lights in a building will often cause considerable interference in sensitive radio receivers.

A great many noises from such outside interferences are often blamed on the receiver, by those who are not able to recognize the sounds. Any high voltage sparks or arcs such as those caused by X-ray machines, ignition equipment, sparking motors or trolleys, arc lamps, or leaky power line insulators, are radiators of high frequency energy and serious offenders in the matter of radio interference. They produce high frequency energy by oscillations set up between the arc or spark and the inductance and capacity of the circuit in which the arc occurs.

X-ray machines generally cause a loud hissing or crashing sound in the speaker for intervals of a few seconds to a few minutes in length. About the best way to prevent radiation of interference from X-rays is to completely shield the machine or the room it is in, with wire screen or sheet metal on the walls and then thoroughly ground this metal shield.

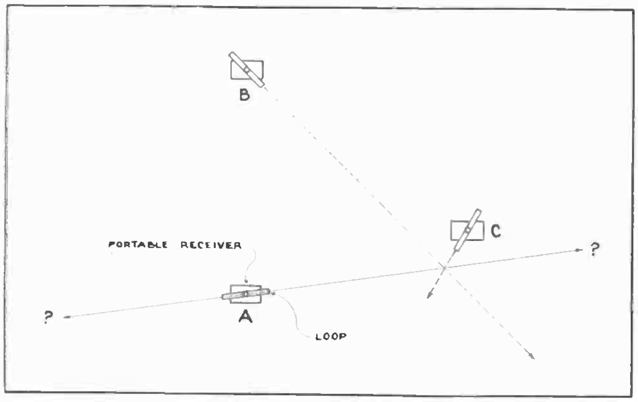

Fig. 125. This sketch illustrates the method of locating a source of radio interfernce with a portable receiver and a loop aerial.

Ignition equipment usually causes a continuous put, put, or clicking sound for single cylinder engines, or a rapid and regular sputtering for multiple cylinder engines, such as automobile or airplane types. Ignition interference can usually be prevented by shielding the spark plug leads and ignition coils with sheet metal, and the high voltage conductors with tubular copper braid, and then grounding these shields. A condenser connected across the make-and-break contacts in the ignition coil primary, and with its case grounded, will also help to eliminate interference from this source.

Either D. C. or A. C. motors of the commutator type are common sources of radio interference, much of it coming from small motors on washing machines, oil burners, refrigerators, fans, etc.

Interference from this source can be quite effectively prevented by connecting two condensers of the proper voltage rating, and from 2 to 6 mfd. capacity, across the line to the motor, and then grounding the connection between them as shown in Fig. 124-A. One or more choke coils in series with the supply line will also help to cure the trouble.

The condensers tend to absorb the high frequencies and pass them to ground, and the choke coils block the high frequencies preventing them from being carried out on the line and radiated as from an antenna. The chokes do not interfere at all with the passage of D. C. power current, nor do they appreciably affect the passage of 60 cycle A. C. They must be made of large enough wire, however, to carry the line current without overheating or causing appreciable resistance voltage drop.

The interference filters should be located as close to the motors or sources of trouble as possible to prevent radiation of the R. F. energy from the lines.

Interference from sign flashers and certain other sources can be largely eliminated by means of a filter such as shown for the motor in Fig. 124-A, by simply connecting this filter in and across the line leads as shown.

Where interference is not filtered out at its

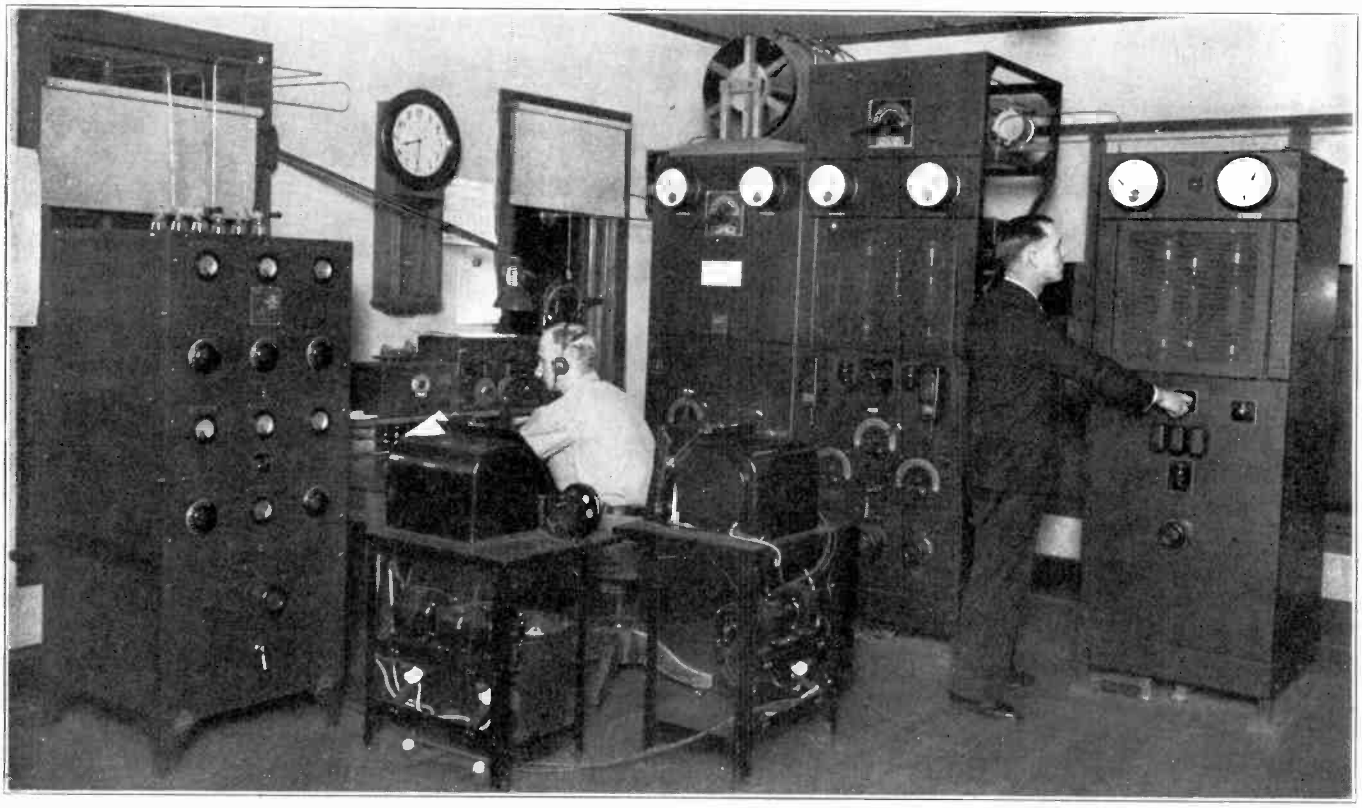

Fig. 126. Photo of a radio transmitter used for transmitting weather reports, orders, and instructions to pilots of aircraft while in flight. Such stations as this throughout the country, and the use of radio receivers on planes carrying passengers and mail, are making aviation much safer and more enjoyable (Photo courtesy of National Air Transport Co.)

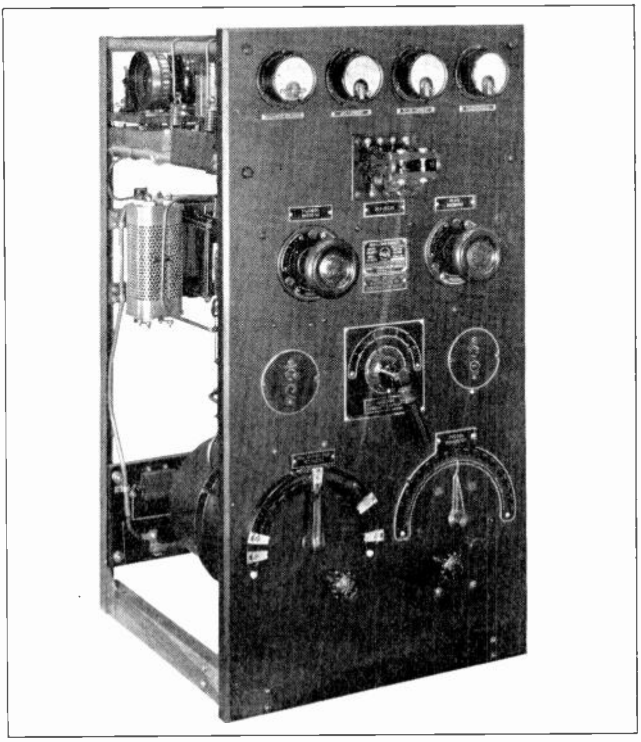

Fig. 127. Front view of a marine type vacuum tube transmitter for use on ships for communication and distress signal uses. Vacuum tube transmitters of this type are rapidly replacing all spark transmitters. (Photo courtesy of Radiomarine Corp. of America.)

source, it will travel over the line or the light or power wires, as a sort of "wired wireless for considerable distance, and either by radiation or conduction will get into any receivers attached to, or near to that line. When a line to which a receiver is attached seems to be full of such interference energy, a filter such as shown in Fig. 124-B can be installed between the outlet and the receiver to greatly reduce the amount of interference reaching the set. This filter consists of both R. F. and A. F. chokes in series with the line, and condensers across the line. In many cases a less elaborate filter or interference eliminator, consisting of two chokes and a pair of grounded condensers, will be sufficient or will greatly improve the condition.

Conductors carrying large amounts of alternating current will often induce considerable A. C. hum in a nearby receiver, by ordinary low frequency magnetic induction. Wires run in grounded conduit rarely cause this trouble.

If the source or sources of radio interference are in the same building with the radio set, they can often be located by a general inspection of the premises.

If the interference seems to be coming from outside the building and no nearby electrical machinery can be located, then the trouble may come from a nearby high voltage power line, distribution line, or arc light circuit. Leaky insulators which occasionally or continuously spark over, transformers with poor insulation, arc lamps in operation, or even incandescent street lamps of the series types with film cutouts, are all common causes of radio interference.

The source of bad interference, even though it is at some distance can be quite easily located by the use of a portable receiver and a loop aerial, with its directional characteristics. By carrying the receiver to a location where the interference can be heard, and then rotating the loop to a point where the sound is loudest, we know that the plane of the loop will point in the direction of the source, or that the source of interference lies in line with the loop in one direction or the other. This is shown by the set and loop at A in Fig. 125, and by the solid line pointing each way from the edges of the loop.

Lay out this line on a sketch or map of the territory and then carry the receiver off a distance of a block or so at right angles to the first line, as shown at B, and again set the loop for loudest reception of the interference. This time we know in which direction from the loop edge the source of interference lies, because it must be the direction toward one of the other lines as shown by the light dotted line in Fig. 125.

Lay out this line on the map and note where it crosses the other, and you will know just about where the trouble comes from.

Then by going close to this spot and testing once or twice more from different angles as shown at C, the loop will point as shown by the short, heavy dotted line, to the very building, transformer, line insulator, street light, or whatever it is that the interference comes from.

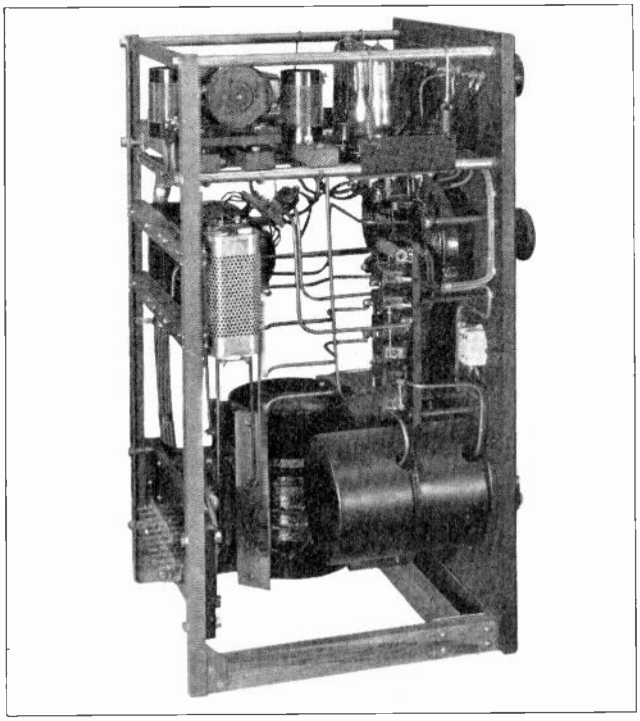

Fig. 128. Side view of marine type vacuum transmitter such as shown in Fig. 127. (Photo courtesy of Radiomarine Corp. of America.)

cal power companies are usually glad to co- ate in eliminating interference if it is proven e coming from their equipment.

he portable set and loop direction finder can be used for locating badly oscillating regenera- e receivers, which radiate serious interference it sets up a continuous howl in other receivers en a half mile or more away. Radio amateurs or perimenters who may be transmitting code with- ut a license, or on a poorly tuned transmitter can lso be located in this manner, and a report to the earest radio inspector will put a stop to their interference.

Observers may think you are looking for a buried treasure or a lost radio program, but your search will usually be worth while.

And we are sure that if you frequently refer to and make good use of the practical material covered in this entire section, and in the entire reference set, it will also be extremely well worth your while.

Get the habit of regularly looking in this reference set for any practical electrical or radio information you want, and never allow any dust to collect on it.

You'll find it like a good tool on the job, very valuable if you use it at every opportunity until you are really familiar with its every possible use, but of not much value if allowed to lay and gather rust (or dust) and until you forget where it is.

With your actual shop training and experience on the equipment, this reference set and your notes to use as reminders, and plenty of real ambition you should surely succeed in electricity.

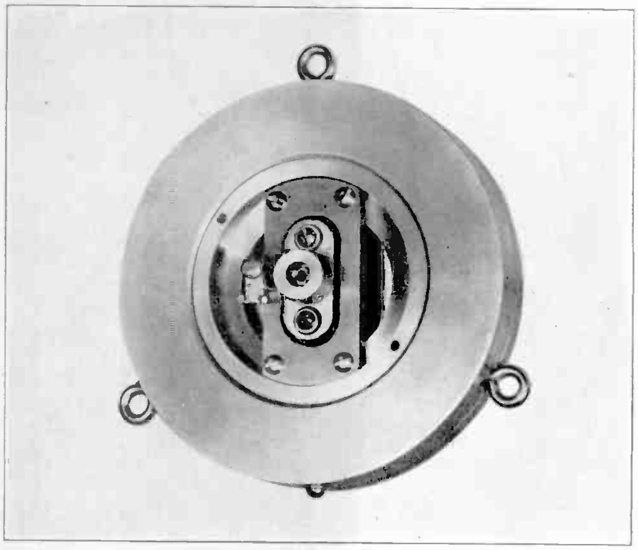

Fig. 130. Photo of a radio microphone without its case. These microphones are used in studios of broadcast stations and are similar in principle to ordinary telephone transmitters but are much more sensitive and accurate.

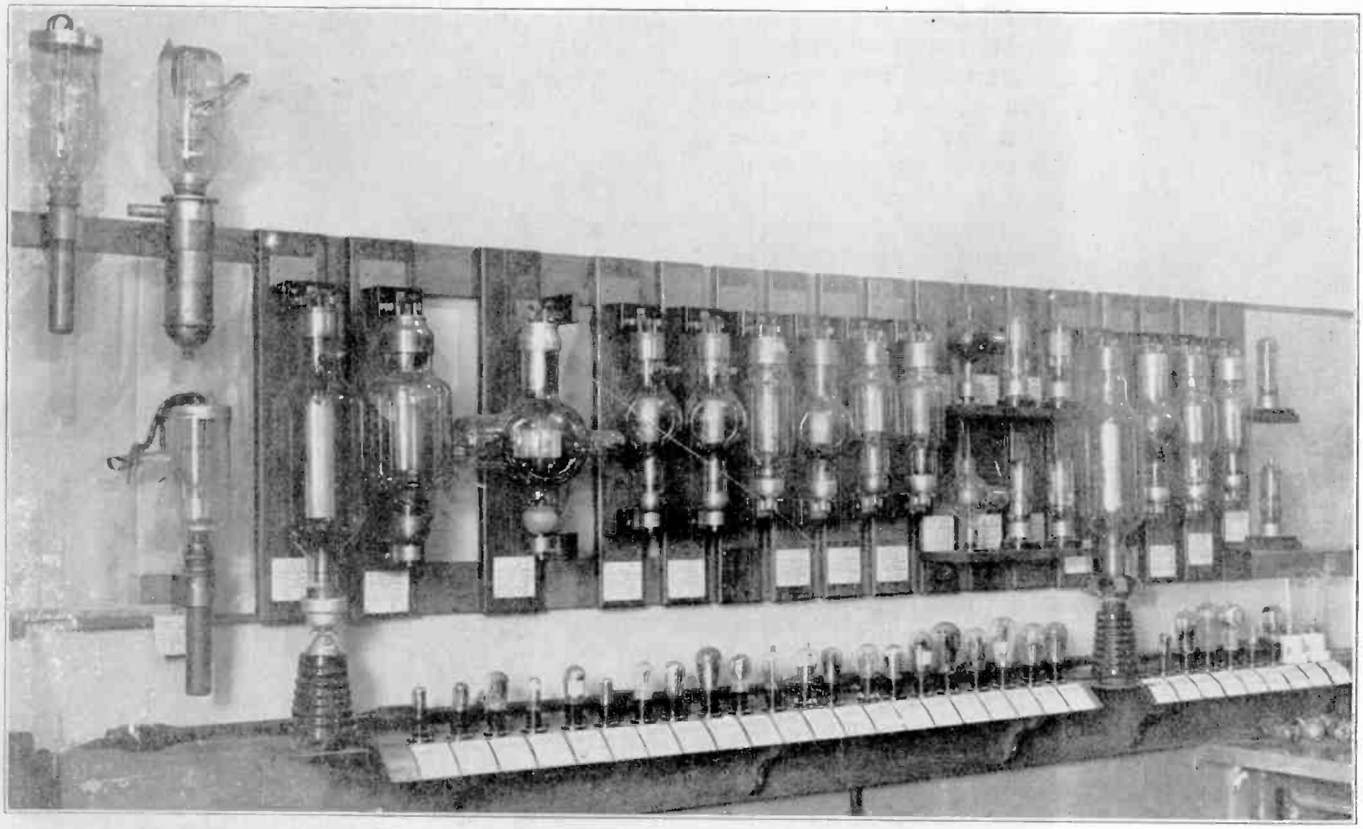

Fig. 129. This excellent photograph shows a display of a large number of vacuum tubes for radio use. These tubes range all the way from the smallest receiving tubes at the left end of the lower row to the large water-cooled transmitter tubes shown at the left of the upper row. These large transmitter tubes can handle 20,000 watts of power. (Photo courtesy of Westinghouse Electric and Mfg. Co.)