DEBUT OF NEW COLUMNS!

www.poptronics.com

OCTOBER 2001

Poptronics®

Formerly Popular Electronics® and Electronics NOW

BASIC CIRCUITRY

Downloadable Circuits see page 59

A GERNSBACK PUBLICATION

PUMPKIN SAFETY LIGHT

Make your pumpkin flicker with this DC-powered circuit

AM/Short-Wave Converter

Turn any AM radio into a Short-Wave receiver

"TechnoScope"

Learn about the history of the Internet

"Short Circuits"

Circuits for experimenters

Also Inside:

- Shared Computing
- New Army SmarTruck
- Braitenberg Vehicles
- Battery-Testing Circuits
- HAARP: What The Buzz Is

$5.99 U.S.
$6.99 CAN.

#BXBDCCH **********5-DIGIT 21046
#21046DHM95:RDOC7# PT
ROBERT DAHM P131
9515 RED RAIN PATH MAY 2002
COLUMBIA MD 21046-2073

www.americanradiohistory.com

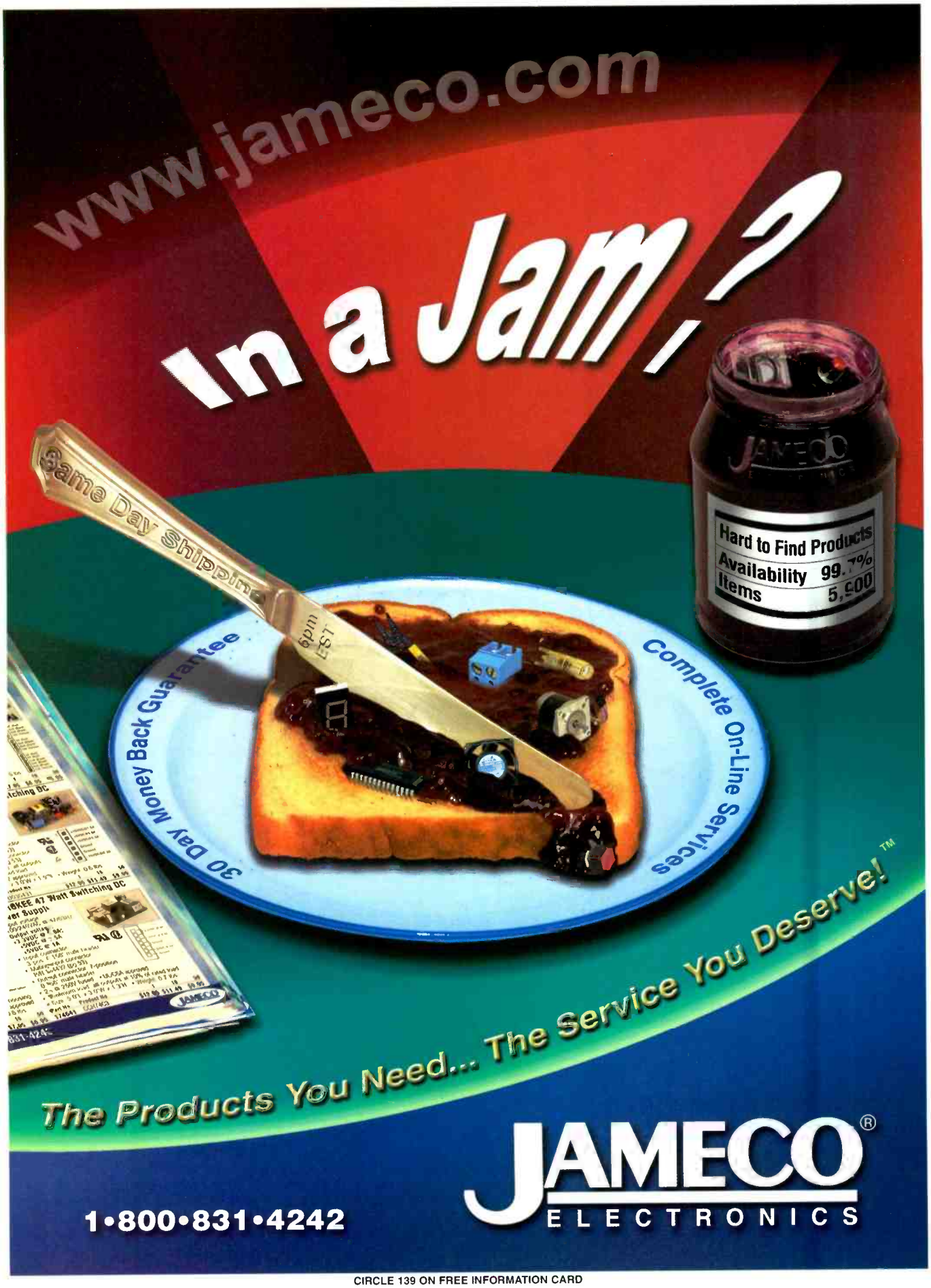

CIRCLE 139 ON FREE INFORMATION CARD

www.americanradiohistory.com

Electronics Now

October 2001, Vol. 2, No. 10

Popular Electronics®

Poptronics®

THE MAGAZINE FOR THE HANDS-ON ELECTRONICS ACTIVIST!

FEATURES

PUMPKIN SAFETY LIGHT ..... *Thomas A. Barker* 34
Use this flickering LED circuit to light your Jack O'Lantern.

AM/SHORT-WAVE CONVERTER ..... *Bill Donofrio* 31
Convert your portable AM radio into a SWBC receiver.

PRODUCT REVIEWS

GIZMO® 7
Digital pre-amps, miniDV camcorders, and Internet copyright software are all inside.

HANDS ON REPORT 21
We review the versatile DiskOnKey storage device.

DEPARTMENTS

PROTOTYPE 12
The Army's SmarTruck is a multi-technology powerhouse.

TECHNOSCOPE ..... Elizabeth Jamison 23
Learn about the history of the Internet.

PEAK COMPUTING ..... *Ted Needleman* 25
Examining the latest trends and capabilities of video cards.

SURVEYING THE DIGITAL DOMAIN ..... *Reid Goldsborough* 27
The marvels of shared computing and surge protection.

SCIENCE: FACT OR FICTION ..... Brooke A. Berlin 29
Scrutinize the patchwork of facts and myths surrounding the HAARP transmitter.

SHORT CIRCUITS ***39***
Experiment and make some noise with a collection of simple circuits.

Q&A ..... *Dean Huster* 43
Reader's questions, feedback, and ideas are brought to forum.

AMAZING SCIENCE ..... *John Iovine* 47
Using a PIC-microcontroller as a neuron inside a Braitenberg Vehicle.

SERVICE CLINIC ..... *Sam Goldwasser* 53
Stories from the frontline of electronics repair.

BASIC CIRCUITRY ..... *Charles Rakes* 59
Get the low-down from your batteries with these circuits.

AND MORE

EDITORIAL 2
LETTERS 3
NEW GEAR 5
YESTERDAY'S NEWS 11
NEW LITERATURE 16
POPTRONICS SHOPPER 65
ADVERTISING INDEX 90
FREE INFORMATION CARD 90A

Poptronics (ISSN 1526-3681) Published monthly by Gernsback Publications, Inc. 275-G Marcus Blvd., Hauppauge, NY 11788. Second-Class postage paid at Hauppauge, NY and at additional mailing offices. One-year, twelve issues, subscription rate U.S. and possessions $24.99, Canada $33.15 (includes G.S.T. Canadian Goods and Services Tax Registration No. R125166280), all other countries $33.99. Subscription orders payable in U.S. funds only, International Postal Money Order or check drawn on a U.S. bank. U.S. single copy price $4.99.
Copyright 2001 by Gernsback Publications, Inc. All rights reserved. Hands-on Electronics and Gizmo trademarks are registered in U.S. and Canada by Gernsback Publications, Inc. Poptronics trademark is registered in U.S. and Canada by Poptronix, Inc. and is licensed to Gernsback Publications, Inc. Printed in U.S.A.
Postmaster: Please send address changes to Poptronics, Subscription Dept., P.O. Box 459, Mount Morris, IL 61054-7629

A stamped self-addressed envelope must accompany all submitted manuscripts and/or artwork or photographs if their return is desired should they be rejected. We disclaim any responsibility for the loss or damage of manuscripts and/or artwork or photographs while in our possession or otherwise.

As a service to readers, Poptronics publishes available plans or information relating to newsworthy products, techniques, and scientific and technological developments. Because of possible variances in the quality and condition of materials and workmanship used by readers, Poptronics disclaims any responsibility for the safe and proper functioning of reader-built projects based upon or from plans or information published in this magazine.

www.americanradiohistory.com

Poptronics®

Larry Steckler, EHF, CET,
editor-in-chief and publisher

EDITORIAL DEPARTMENT
Chris La Morte, managing editor
Evelyn Rose, assistant editor
Brooke A. Berlin, editorial assistant

CONTRIBUTING EDITORS
Reid Goldsborough
Sam Goldwasser
Dean Huster
John Iovine
Elizabeth Jamison
Ted Needleman
Charles D. Rakes
Teri Scaduto

PRODUCTION DEPARTMENT
Ken Coren, production director
Kathy Campbell, production manager
Michele L. Musé, prepress specialist

ART DEPARTMENT
Russell C. Truelson, art director
Michele L. Musé, graphic artist

CIRCULATION DEPARTMENT
Gina Giuliano, circulation manager

REPRINT DEPARTMENT
Maria Menichetti, Reprint Bookstore x235

BUSINESS AND EDITORIAL OFFICES
Gernsback Publications, Inc.
275-G Marcus Blvd.
Hauppauge, NY 11788
631-592-6720
Fax: **631-592-6723**
President: **Larry Steckler**
Vice-President: **Adria Coren**
Vice-President: **Ken Coren**

SUBSCRIPTION CUSTOMER SERVICE/ ORDER ENTRY
800-827-0383
7:30 AM - 8:30 PM EST

Advertising Sales Offices listed on page 90

Cover by Michele Lyn Musé

Cover Illustration by Russell C. Truelson

VISIT US ON THE INTERNET AT:
www.gernsback.com
or www.poptronics.com

Since some of the equipment and circuitry described in POPTRONICS may relate to or be covered by U.S. patents, POPTRONICS disclaims any liability for the infringement of such patents by the making, using, or selling of such equipment or circuitry, and suggests that anyone interested in such projects consult a patent attorney.

Editorial

mailto: popeditor@gernsback.com

The Populace Has Spoken; And We Shall Provide...

Many loyal readers have been providing us a wealth of constructive feedback on a regular basis. Thank you, one and all, for your interest in this magazine and your desire to help mold the magazine into a publication that is more enjoyable, educational, and inspiring. Each day we receive scores of letters—electronic and pulp—discussing the content of **Poptronics**. Although it is impossible to meet the requests of every single reader, we shall try our best to entertain as many suggestions as possible. Progress takes time, effort, and dedication from our team, and all we require from the readership is feedback and patience. There you have it, folks. Continue to read **Poptronics** and continue to provide us that vital feedback. Our main goal at **Poptronics** is to provide our readership with a magazine that they'll enjoy reading, time and time again.

So, in this issue you will find a few new items, such as the column "Short Circuits," which offers relatively simple circuits for those of us who just want to get a quick fix. Also, in the tradition of our founder, we will explore some of the technological myths and legends in a column entitled "Science: Fact or Fiction?" Have you seen what we are capable of doing with the aid of advanced electronics?

Future plans include a section discussing basic electronics. Many readers have expressed a need for a basic understanding of the main principles of electronics. After all, not all of us are NASA engineers. Oh, but Scott Savage, creator of the OOPIC, happens to work for NASA; and Mr. Savage will soon be reviving the "Robotics Workshop" column. Robotics is still a major source of interest. Also, this month marks the debut of "TechnoScope"—technology broken down to basics. This column is for those readers who wonder why we never catered to the less experienced hobbyist.

This month we have two construction features that are rather inexpensive to build and introduce beginners to oscillator circuits. The "Pumpkin Safety Light" utilizes an oscillator to control the flickering of LEDs, and the "AM/Short-Wave Converter" uses a Hartley oscillator and mixer to convert any AM radio into a short-wave receiver. Both of these projects should stimulate even the most jaded "solder-jockeys." Well, warm up the iron and turn the page, as we bring you another fine issue.

Happy reading,

Chris La Morte
Managing Editor

www.americanradiohistory.com

LETTERS

mailto: letters@gernsback.com

Schematic Overhaul

Recently, I spoke with Steve Daniels, author of August's "Tremulous Bear" article. He informed us of a few misinterpretations in the schematic on page 33 of the August 2001 issue. Figure 1 shows the corrected schematic for the stomp box project.—Editor

Corrections For Wireless Control Article

The August 2001 issue of ***Poptronics*** *featured an article from author Frank Montegari. Since the original article ran two years ago, prices have changed and so has Glolab Corporation's address. The street address is now Glolab Corp., 307 Pine Ridge Drive, Wappingers Falls, NY 12590. The price for kit KT418S2 is now $48.75, and the price for kit KR418S2 is now $72.50. Up-to-the-minute information can be found at* www.glolab.com.*—Editor*

A Dedicated Hobbyist

In reply to Marcus Levy's letter in the July issue asking why electronic hobbyists are giving up on d-i-y electronics, I have to say that I am not. I have been building electronic projects since 1973—the TV Typewriter being one of the biggest I tackled back then. Looking on my shelf of projects waiting to be done or waiting for parts, I see an R/F multiplexer from RE (January 1985) that I have made changes to for a rack-mount unit with modern display, later to be followed by an audio/video multiplexer (1986). Other projects include vu meters for my stereo amp that I built from a kit, a pocket oscilloscope and a match box one as well, a frequency counter and logic probe, a current-sensing AC outlet, a micro messenger LCD text scroller, pocket roulette, a pair of one-inch color LCD displays for use in a VR goggle, and an LED scrolling message display.

I have a few notes for electronic art ideas from some Christmas Ornament projects from EN (1993). Projects for my non-PC computers include LCD glasses interface, hi-speed serial port, printer buffer, midi interface, a speech synth, a computer controller for the r\f mux, a weather station with wall display, caller I.D., and a plug-in compass for my

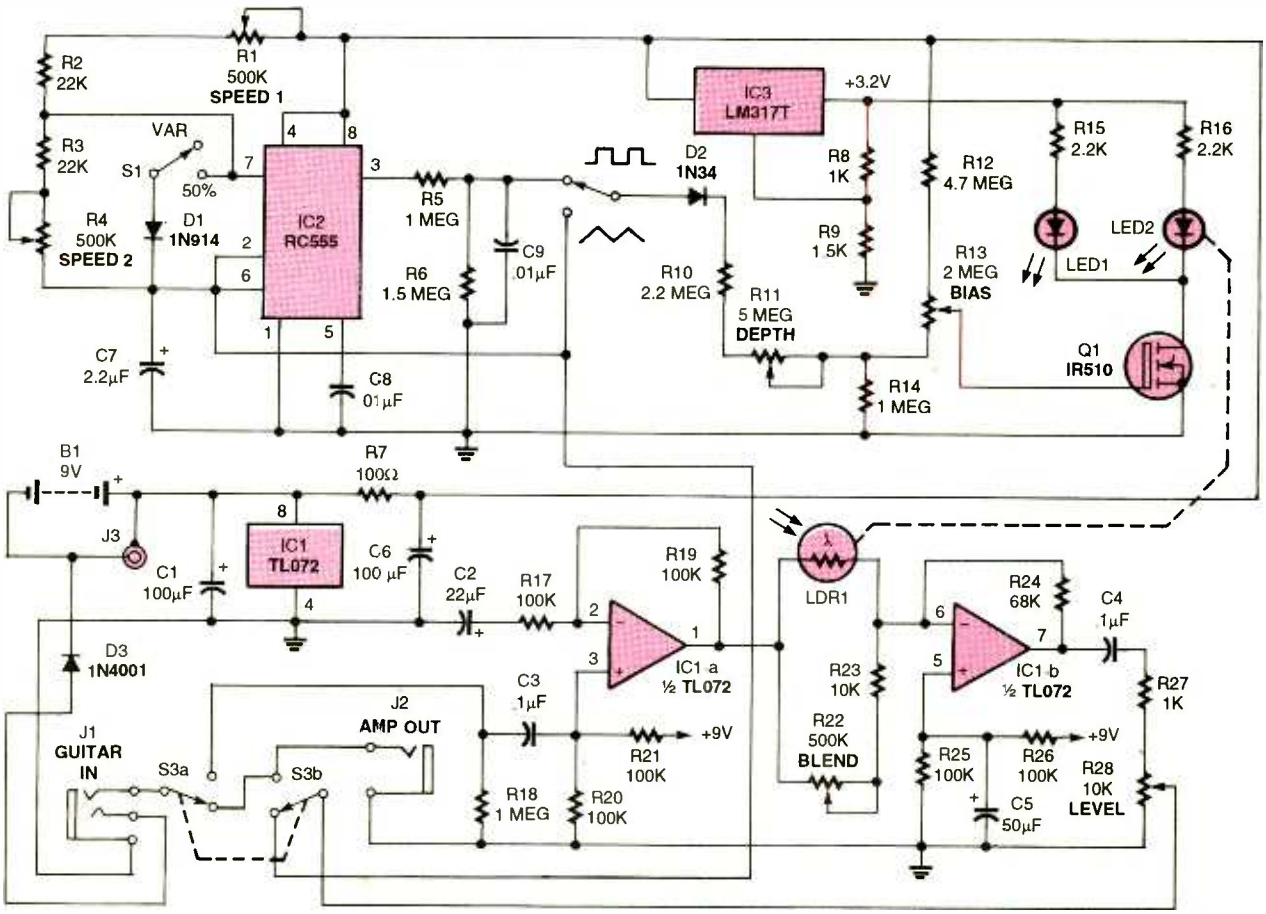

Fig. 1. Here is the corrected schematic for the Tremulous Bear guitar pedal. Note the following changes: There is now a junction beneath diode D1; capacitor C7 is polarized; resistor R11 no longer ties to ground; capacitor C2 is polarized; and resistor R26 is the source of positive nine volts.

www.americanradiohistory.com

Atari Portfolio palmtop.

Several PIC projects include an infrared keyboard receiver and a switch/LED display mulitplexer. First, I need to build the PIC programmer to program them with my PC. Plus, let's not forget more stuff involving the slow integration of home automation. Just last year I ran all new central wiring for my telephones so I could someday add a pbx type control to them.

Many of these projects came from **Radio Electronics**, **Popular Electronics**, or **Poptronics**, with some issues gong back to the 1960s, in whole or in part. Some ideas come from those I have e-mailed and e-chatted with for years. So I for one have no lack of projects to keep me busy. In addition, I have a file cabinet drawer full of more ideas and information that I will never get to. The biggest problem is that, in waiting so long to decide to do some of them, some parts get very hard to find, as well as finding the time to build the ones that have all the parts.

In many ways, this is the best time for electronic projects because we have computer tools that let us hand design and print circuit board patterns very quickly and easily. So what if they usually cost as much or more than buying an off-the-shelf device? Electronics is my first hobby. Life wouldn't' be as exciting if I couldn't build stuff myself. Therefore, I hope Mr. Levy will keep his hobbyist flame going as long as possible.

RICK DETLEFSEN
via e-mail

Merging On The Electronics Superhighway

I have been a reader of your publication, **Popular Electronics**, for as long as I can remember. **Popular Electronics** was with me in my electronics class in high school—that was over 30 years ago. So much has changed throughout the years. It's too bad that today's youth does not have the opportunity we had to build a Heath Kit or a circuit with old TV parts. Today's kids have never even heard of Carl and Jerry. They might think it has something to do with an ice cream.

Your magazine is great, and I am very happy it has survived so many years. What ever happened to NRI? I took one of their courses, and when I finished I no longer saw any more advertisements. One thing I would love to see in **Poptronics** is an article on the many different types of jobs in the electronics market. Maybe once a month a different profession. Also, the many different ways to find education for electronics/computers. We live in a very fast-changing time, where tomorrow jobs have yet to be created. No longer are there cradle-to-grave jobs, and this would be a great opportunity to expand your reading audience. Keep up the great work.

STEVEN NEWMAN
via e-mail

Energy Creation And Conservation

In response to the August 2001 editorial, "The Electronic Renaissance," where it was stated, "part B of my prediction is that the majority of neophytes will be practicing in the discipline of energy creation and storage," you must remember what was written in Faires, 1958. "Conservation of Energy—the law of the conservation of energy states that energy can be neither created nor destroyed. It is a law based on physical observations and is not subject to mathematical proof. In its application to energy transformations on this Earth, there is no known exception, except as mass is converted into energy, and vice versa, and it is therefore an accepted principle and a reliable guide." Therefore, part B of your prediction contains a big surprise indeed.

CLAUDE DUMAS, ENG.
via e-mail

KEEP IN TOUCH

We appreciate letters from our readers. Comments, suggestions, questions, bouquets, or brickbats ... we want to hear from you and find out what you like and what you dislike. If there are projects you want to see or articles you want to submit—we want to know about them.

You can write via snail mail to:

Letters
Poptronics
275-G Marcus Blvd.
Hauppauge, NY 11788

Sending letters to our subscription address increases the time it takes to respond to your letters, as the mail is forwarded to our editorial offices.

Our e-mail address can be found at the top of the column.

Of course, e-mail is *fast*.

All of our columnists can be reached through the e-mail addresses at the head of each column.

And don't forget to visit our Web site: *www.gernsback.com*.

Thanks, Hugo

I have procrastinated in writing this. Please forgive me! With 82 years of hindsight I realize that I owe Hugo Gernsback quite a debt.

Back in the late 1920s and early 1930s, shortly after the Hams had been run out of 550–1600 kc into those frequencies about 200 meters, which most people "knew" were "worthless," Hugo, who had been publishing magazines titled **Television** and **Radio**, came out with a new magazine by the name of **Short Wave Craft**. This of course was expected to fail, along with all the efforts to use those worthless frequencies that Hams had been shoved off into.

I was living in the Panama Canal Zone at the time, which was an ideal location for short-wave listening. Eventually along came the new type 30 and 31 tubes, which was a major leap forward over the old battery-eating type 201s.

Hugo was plugging along with **Short Wave Craft**, reporting new successes achieved on forty meters, twenty meters, and then ten meters. These "worthless" frequencies were becoming exciting! Then, a few Hams broke into the 60 mc areas, and it was not too long before Hugo was reporting on moon-bounce and time delays on these frequencies. We were all going nuts over five meters and no one was making a vacuum tube to work on these frequencies! Hugo and his magazine came to our rescue with a recipe for using a type 30 tube in a receiver and transmitter transceiver.

First, you took a type 30 tube and boiled it in water. Yes, you read that correct—you boiled it in water to loosen the tube base glue and remove the base. Losses in the tube base were so high that to make the tube oscillate at 60 mc you had to remove the base and solder the leads directly into your circuit.

I could spend a lot of time on these early electronic adventures, but will summarize by saying that much of the electronics that I needed in WWII and engineering school I had already learned in my early teens from Hugo Gernsback and his magazine. Thank you Hugo.

FRANK B. TURBERVILLE, JR.
Milton, NC

(Continued on page 38)

www.americanradiohistory.com

NEW GEAR

For more information go to page 90A
or e-mail: requests@berkshire-is.com

USE THE FREE INFORMATION CARD FOR FAST RESPONSE

Fiber Tester

The *FT300 Fiberinspector* ($3495) is a portable microscope complete with a 2.5-inch LCD display used for inspecting terminations in hardware and patch panels. The device includes a lightweight probe that contains an LED light-source and a CCD video camera. Technicians can view a fiber end-face through the LCD screen, avoiding potential hazards to their eyes. An AC adaptor/battery charge and various probe adapter tips are included with the kit.

FLUKE CORP.
PO Box 9090.
Everett, WA 98206-9090
425-347-6100
www.fluke.com

CIRCLE 60 ON FREE INFORMATION CARD

Portable Power Analyzer

Designed for large electrical contractors who perform power quality testing, particularly for harmonic distortion, the *Ideal Analyzer Model 61-805* ($2495) provides endless options in one compact instrument. The analyzer contains five testing programs, which can be uploaded on the same unit and operated consecutively. It has an RS232 interface for fast downloading and one MB of internal memory for longer periods of testing. Included with the analyzer are a number of useful extras, such as three 1000A clamp adapters, voltage leads with four alligator clips, and power and RS232 cables.

IDEAL INDUSTRIES, INC.
Becker Place
Sycamore, IL 60178
815-895-5181
www.idealindustries.com

CIRCLE 62 ON FREE INFORMATION CARD

Multi-Function Workstation

The *MBT 250* ($1680) is an all-inclusive workstation for all of your soldering needs. The unit features the *PS-80 Soldering Iron*, the *SX-80 Desoldering Hand-piece*, the *TT-65 ThermoTweez*, and the *TP-65 ThermoPik*. Whether you are working with through-hole boards or surface-mounted components, this PACE kit places all the needed tools at your fingertips.

PACE
9893 Brewers Court
Laurel, MD 20723-1990
301-490-9860
www.paceworldwide.com

CIRCLE 61 ON FREE INFORMATION CARD

High-Production PVC Bender

Appropriate for a wide range of industries—be they industrial and residential or underground and wastewater treatment—the *HotTube PVC Bender* ($686) can bend ½-inch to 2-inch PVC conduit. With an adjustable thermostatic control, it is able to simultaneously heat up to five bundles of ½-inch or three bundles of ¼-inch conduit without rotating, scorching, or burning. Easy-to-use in any environment, it has lightweight construction, a low power consumption for standard 120 volt outlets, and an insulated, waterproof housing.

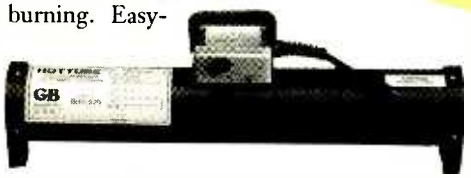

GARDNER BENDER
P.O. Box 3241
Milwaukee, WI 53201-3241
800-624-4320
www.gardnerbender.com

CIRCLE 63 ON FREE INFORMATION CARD

Digital Bench-Top Applications

A new DC power supply, the *Digital Triple Output Power Supply* ($450) is suitable for many different bench applications, such as service, research and engineering, test, and manufacturing. Using a standard 115-V_{AC} outlet as a power source, it provides various voltage outputs between 0 V_{AC} and 24 V_{DC}, and up to 5A at continuous operation. It has a sizeable front-panel-mounted precision digital meter, along with other control features.

B & K PRECISION CORP.
1031 Segovia Circle
Placentia, CA
92870-7137
714-237-9220
www.bkprecision.com

CIRCLE 64 ON FREE INFORMATION CARD

www.americanradiohistory.com

Electrifying Measurements

The CR4100 Series of *True RMS Electrical Current Transducers* ($160–$400) monitor non-linear, AC current electrical loads. Different styles within the series are available for measuring single or three-phase systems of levels up to 60 amps and offer different input ranges. While they are capable of operating over frequency ranges of 20 to 5K Hz, external current transformers are available to extend the measurement range. The series is calibrated to +/−0.5% accuracy at 60 Hz.

CR MAGNETICS, INC.
544 Axminister Dr.
Fenton (St. Louis),
MO 63026
314-343-8518
www.crmagnetics.com

CIRCLE 65 ON FREE INFORMATION CARD

Don't Get Snippy

Tired of the pain that comes from using old electrician's scissors? The *Low Fatigue Electrician's Snips* ($16) have a large, padded ring for more leverage and spread pressure. The new design fits your grip better and with an ice-tempered stainless steel construction, you can be sure there will be no rust, peeling, discoloration, or irritation. Serrated strip notches also make for easier cutting.

JENSEN TOOLS, INC.
7815 S. 46th St.
Phoenix, AZ 85044-5399
800-426-1194 or 602-453-3169
www.jensentools.com

CIRCLE 67 ON FREE INFORMATION CARD

Clamp It On

Clamp-On Ground Resistance Tester Models 3711 ($1995) and *3731* ($2195) have ten times the resolution of the first two generations of clamp-on ground testers in this series. These tools can measure ground rod and small grid resistance without the need for auxiliary ground rods or disconnecting the ground under test. Both models include new features with better power management for extended battery life, and the Model 3731 also includes an alarm and memory-logging function.

AEMC INSTRUMENTS
200 Foxborough Blvd.
Foxborough, MA 02035
800-343-1391 or 508-698-2115
www.aemc.com

CIRCLE 66 ON FREE INFORMATION CARD

Logging Nature's Data

The *IQ-TRH* ($139) and *IQ-TRH-40* ($169) data loggers are designed for remote, battery-operated measuring of temperature and relative humidity. They can hold up to 31,920 and 64,680 samples, respectively—a significant amount of data for both engineering and scientific applications. When the data is complete, the loggers reconnect to a PC and download directly to a Microsoft Excel worksheet.

For first-time orders, *IQ-PICK* ($99)—a special PC Interface Kit—is required to set up and download data.

MEASUREMENT COMPUTING
16 Commerce Blvd.
Middleboro, MA 02346
508-946-5100
www.measurementcomputing.com

CIRCLE 68 ON FREE INFORMATION CARD

Portable Color Analyzer

From your home theater to a convention center, the *CP291 ColorPro Pocket PC Color Analyzer* ($3295) helps to align color tracking and luminance levels on video displays. The graphical interface decreases calibration time, and the CIE and RGB screens illustrate exactly which colors need adjustment. Displays can be modified to fit color temperature, and the analyzer can operate up to four hours on battery charge. Software, such as the *Windows-CE ColorPro* and *ColorPro Generation*, are included, along with an HP Jornada Pocket PC, Serial Interface Connector and cable, and more.

SENCORE
3200 Sencore Dr.
Sioux Falls, SD 57107
800-SENCORE
www.sencore.com

CIRCLE 69 ON FREE INFORMATION CARD

www.americanradiohistory.com

GIZMO®

For more information go to page 90A

or e-mail: requests@berkshire-is.com

Home Theater in a Box

The *JBL Cinema ProPack 600* ($1199) home-theater package includes a five-disc DVD changer, a Dolby Digital/DTS receiver, and a 5.1-channel speaker system, plus a full-function remote control and all required cables. The receiver boasts MP3 decoding as well as Logic 7 processing to derive surround sound from two-channel sources and VMAx for virtual surround sound with just two speakers. The speaker system consists of four satellites, a dedicated center-channel speaker, and a 100-watt powered subwoofer.

JBL Consumer Products, 250 Crossways Park Drive, Woodbury, NY 11797; 516-496-3400; *www.jbl.com.*

CIRCLE 50 ON FREE INFORMATION CARD

Toasty Towels

You don't have to stay in a fancy hotel to enjoy the luxury of heated towels. *Warmrails heated towel racks* ($105 to $185) each contain an electrical element that runs the full length of the rack, heating it to a factory-set, safe, and consistent temperature—using only as much electricity as a low-wattage light bulb. Space-saving wall-mount models are easy to install in small bathrooms, and freestanding models are available for larger rooms.

Warmrails, 1165 Augusta Street, Costa Mesa, CA 92626; 877-927-6724; *www.warmrails.com.*

CIRCLE 52 ON FREE INFORMATION CARD

Mini Burner

Sharp's *CD-RW5000 mini-system* ($599) lets you load up to six CDs in its tray changer and make digital recordings to a CD-R or CD-RW disc. The "tower-style" center unit includes a CD burner with the ability to record at twice the normal playback speed, an AM/FM digital tuner with 40 station presets, a 200-watt (total) amplifier, and a cassette deck. The speakers, also tower style, feature separate amps with two subwoofers.

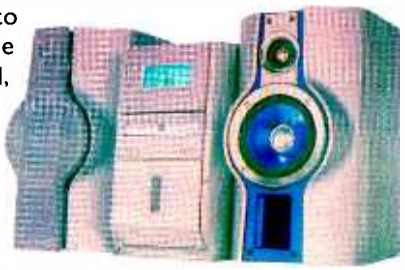

Sharp Electronics Corporation, Sharp Plaza, Mahwah, NJ 07430; 800-BE-SHARP; *www.sharp-usa.com.*

CIRCLE 51 ON FREE INFORMATION CARD

Long-Play MiniDV Cam

Canon's *ZR30MC MiniDV camcorder* ($999) is the first to offer an extended long play (ELP) mode, allowing four hours of video to be recorded on an 80-minute cassette. The camcorder has a color viewfinder plus a 2.5-inch LCD view screen. It features a 10x optical zoom lens and 200x digital zoom, image stabilization, digital effects, digital stereo sound, and IEEE 1394 Firewire connectivity. There's a memory card slot for storing still shots to MMC and SD memory cards (an 8-megabyte MMC is included). Its Progressive Photo Mode is said to provide greater clarity and detail, especially when making a print using a computer or photo/video printer.

Canon U.S.A., One Canon Plaza, Lake Success, NY 11042; 800-828-4040; *www.canondv.com.*

CIRCLE 53 ON FREE INFORMATION CARD

BriteView Calculators

Ease back-to-school blues with one of Royal's *Genius Calculators* ($2.99 to $14.99). Ranging in size from key chain to desktop, each model features the "BriteView" holographic reflector, which gives the display a greenish glow and makes it easy to read day or night. Rubberized bodies provide a sure grip and no-slip usage.

Royal Consumer Business Products, Olivetti Office USA, 765 Highway 202, Bridgewater, NJ 08807-0945; 908-526-8200; *www.royal.com.*

CIRCLE 54 ON FREE INFORMATION CARD

www.americanradiohistory.com

GIZMO®

Pressure Monitor

Under-inflation shortens the life of tires, reduces fuel economy, and can pose a safety hazard. The *Tire Sentry model TMA-04* ($295) is an electronic system that continuously monitors tire pressure and warns you when a problem develops or routine maintenance is needed. The wireless system consists of four tire sensors, which fit on the valve stems (replacing existing valve caps). They send signals to the instrument panel, which beeps and displays information to let you know which tire is low.

Fleet Specialties Division, P.O. Box 4575, Thousand Oaks, CA 91359; 818-889-3982; *www.usagreen.org/fleet/*.

CIRCLE 55 ON FREE INFORMATION CARD

Headphones to Go

Altec Lansing's *AHP10 headphones* ($19.95) are designed to provide users on the go with high-quality sound from personal stereos; portable CD, DVD or MP3 players; and handheld video games. The phones boast a set of 32mm drivers for full frequency response, an on-cord volume control, and gold-plated stereo mini plugs. A double adjustable headband and leatherette earpads ensure a comfortable fit.

Altec Lansing Technologies, Inc., Milford, PA 18337-0277; 800-258-3288; *www.altecmm.com*.

CIRCLE 57 ON FREE INFORMATION CARD

Table-Top Tunes

Aiwa's *CSD-NS1 table radio* ($210), with CD player, tuner, and cassette deck, is an elegant and compact alternative to a minisystem or clock radio. Its solid wood cabinet with top-loading CD player and brushed-silver front panel flanked by brown cloth speaker grilles give it a classic appearance. Features include a digital tuner, 10-watt-per-channel amplifier, Q-Sound virtual-surround processing, bass boost, clock, and remote control.

Aiwa America Inc., 800 Corporate Drive, Mahwah, NJ 07430; *www.aiwa.com*.

CIRCLE 56 ON FREE INFORMATION CARD

Digital A/V Preamp

Designed to meet the challenges of today's home-theater installations and those of tomorrow's evolving platform standards, Proton's *AS-263 I Dolby Digital/DTS 5.1 channel preamplifier* ($800) reproduces six separate audio channels: left, right, center, left and right surround, and an independent subwoofer channel. It offers eight different on-screen surround modes (no surround, large and small room, large and small theater, large and small hall, and stadium) and automatically detects and decodes the input signal format. It provides a full complement of analog and digital inputs and outputs, and features precise six-channel volume and level controls, adjustable center- and surround-channel delays, and a bass-management system that sets the speaker mode to match your speaker size.

Proton U.S.A., 13855 Struikman Road, Cerritos, CA 90702-1031; 562-404-2222; *www.proton-usa.com*.

CIRCLE 58 ON FREE INFORMATION CARD

www.americanradiohistory.com

FireWire for VME Computers

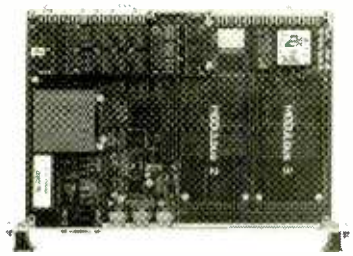

The *VMOD-40/60FW* ($1795) is a VME card that allows data transfer rates of 200Mbit per second by forming the basis of a high-level system controller. With no interface limitations, the VMEbus systems can now be IEEE1394-connected to hard disks, scanners, and multimedia devices, making for many versatile industrial applications. Customized options are also available for individual needs.

Saelig Company; 716-425-3753; *www.saelig.com.*

Printer Perfect

Perfect for small and mid-size businesses trying to increase productivity while decreasing cost in the competitive marketplace, the *ML-1650 Laser Printer* ($550) is not only PC and Mac compatible, but is also equipped with many money-saving options. The toner-save button, for example, reduces toner consumption by 40% while maintaining a sharp appearance. With a resolution of 1200 dpi and the ability to print 17 pages per minute, this printer turns out a high volume with eye-catching quality.

Samsung; 310-537-7000; *www.samsungusa.com/printer.*

Internet Copyright Protection

One of the simplest things to do today is create your own Web site. Unfortunately, it has also become quite easy to plagiarize and copy Web text and graphics. The *HTML Guard 2.0* ($15) is capable of encrypting HTML source codes in order to protect intellectual property. It prevents text selection and disables right mouse saving and the print function within a browser. Compatible with all JavaScript-enabled browsers, its only system requirement is a Pentium PC, with 8 MB RAM.

Andreas Wolf Software; *www.aw-soft.com.*

Brain-storming Has Become Digital

Do you still do your best brainstorming with a pen and pad of paper? The *IBM ThinkPad TransNote* ($2849) integrates ink and paper with a mobile computer. Bring it everywhere; this portable portfolio-style computer weighs less than 5.5 lbs. and offers wireless systems for quick and reliable communications. Now you can share notes and sketches, as well as organize ideas with an easy touch screen and digital pen.

IBM Corporation; 888-ShopIBM; *www.ibm.com/pc/thinkpad.*

DVD Diversity

Home entertainment is growing in popularity. For the more advanced aficionados, the new *4.7GB OEM DVD-RAM drives* ($549) are a single, cost-effective solution for developing, storing, and playing theater-quality items. The new enabling features enhance the drive's value and versatility, allowing users to store two hours worth of video and more than seven hours worth of audio. There are also cross-device options, which permit use of DVD-ROM drives, DVD players, DVD recorders, and all CD equipment.

Panasonic Document Imaging Company; 800-742-8086; *www.panasonic.com/storage.*

Gizmo is published by Gernsback Publications, Inc., 275-G Marcus Blvd., Hauppauge, NY 11788. Senior Writers: Christopher Scott and Teri Scaduto. *Copyright 2001 by Gernsback Publications, Inc. Gizmo is a registered trademark. All rights reserved.*

www.americanradiohistory.com

CD ROM based resources for learning and designing

The internationally renowned series of CD ROMs from Matrix Multimedia has been designed to both improve your circuit design skills and to also provide you with sets of tools to actually help you design the circuits themselves.

matrix multimedia

Electronic Circuits and Components provides an introduction to the principles and application of the most common types of electronic components and how they are used to form complete circuits. Sections on the disc include: fundamental electronic theory, active components, passive components, analogue circuits and digital circuits.

The Parts Gallery has been designed to overcome the problem of component and symbol recognition. The CD will help students to recognize common electronic components and their corresponding symbols in circuit diagrams. Quizzes are included.

Digital Electronics details the principles and practice of digital electronics, including logic gates, combinational and sequential logic circuits, clocks, counters, shift registers, and displays. The CD ROM also provides an introduction to microprocessor based systems.

Analog Electronics is a complete learning resource for this most difficult subject. The CD ROM includes the usual wealth of virtual laboratories as well as an electronic circuit simulator with over 50 pre-designed analog circuits which gives you the ultimate learning tool. The CD provides comprehensive coverage of analog fundamentals, transistor circuit design, op-amps, filters, oscillators, and other analog systems.

Electronic Projects is just that: a series of ten projects for students to build with all support information. The CD is designed to provide a set of projects which will complement students' work on the other 3 CDs in the Electronics Education Series. Each project on the CD is supplied with schematic diagrams, circuit and PCB layout files, component lists and comprehensive circuit explanations.

PICtutor and C for PICmicro® microcontrollers both contain complete sets of tutorials for programming the PICmicro series of microcontrollers in assembly language and C respectively. Both CD ROMs contain programs that allow you to convert your code into hex and then download it (via printer port) into a PIC16F84. The accompanying development board provides an unrivaled platform for learning about PIC microcontrollers and for further development work.

Digital Works is a highly interactive scalable digital logic simulator designed to allow electronics and computer science students to build complex digital logic circuits incorporating circuit macros, 4000 and 74 series logic.

CADPACK includes software for schematic capture, circuit simulation, and PCB design and is capable of producing industrial quality schematics and circuit board layouts. CADPACK includes unique circuit design and animation/simulation that will help your students understand the basic operation of many circuits.

Analog Filters is a complete course in filter design and synthesis and contains expert systems to assist in designing active and passive filters.

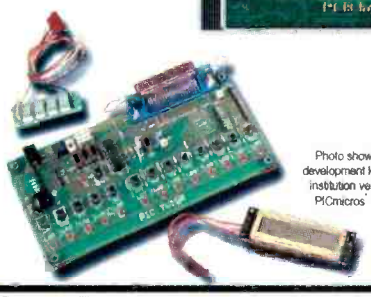

Photo shows PICmicro® development kit supplied with institution versions of C for PICmicros® and PICtutor

Shareware/demo CD ROM with more than 20 programs $4.99 refundable with any purchase.

Order Form:

Please circle the products you would like to buy on the table below, calculate the total cost, fill in the rest of the order form and send it to us. NY residents add sales tax. Please allow 6 weeks for delivery.

	Student	Institution
Electronic Ccts. & Comps.	$50	$99
Digital Electronics	$50	$99
Analog Electronics	$50	$99
Electronic Projects	$75	$159
PICtutor	$179	$350
C for PICmicros	$179	$350
Digital Works	$50	$99
CADPACK	$75	$159
Analog Filters	$75	$159
Postage - USA	$5	$5
Postage - Canada	$5	$5

Name: _____

Address: _____

_____

Zip: _____ Phone: _____

Card Type: _____
Mastercard, Visa, or Discover only

Card number: ☐☐☐☐ ☐☐☐☐ ☐☐☐☐ ☐☐☐☐ Expire date: ☐☐ ☐☐

I have enclosed my check for $: _____ Signature: _____

Please charge my credit card for $: _____ _____

CL02

Phone your order to us on:

631-592-6721

or send your order to:

CLAGGK Inc.
PO Box 12162
Hauppauge, NY 11788

Order online NOW from: www.poptronics.com

www.americanradiohistory.com

YESTERDAY'S NEWS

A PEEK INTO THE GERNSBACK ARCHIVES

1900
1910
1930
1940

Dateline: October 1951 (50 years ago)

Radio-Electronics highlights the conversion from black and white to color television, along with other related topics, such as new sources of TVI (television interference) and answers to inter-carrier buzz. The cover story is about mobile television service laboratories—the TMU, or Tele-Mobile Units—that operate out of Chicago vans. The publication features test instruments, such as the signal launcher, which provides square-wave output for rapid troubleshooting by signal substitution. *(Interesting parallels can be drawn between now and a half of a century ago. Today, television once again stands on the threshold of change; this time from analog to digital. And, TVI has been updated to EMI and intermodulation.)*

1951

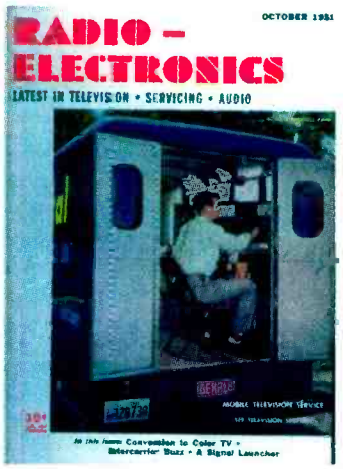

1960

Dateline: October 1971 (30 years ago)

In this issue, **Radio Electronics** focuses on how to construct a premiere 4-channel stereo hi-fi. As the article explains, using the latest technology of 4-channel pre-amps and amplifiers produces a wonderful sound with little noise interference. The pre-amp has inputs for phono and tape, along with ganged controls, and the amp is 50 watts rms per channel. Also included is a "Service Clinic" on heat sinks and thermal resistance, and "kwik-fix" troubleshooting charts. *(There are some die-hard tube fans who still insist that at the 50-watt range, no solid-state amp stands a chance against a vacuum tube driven amp.)*

1971

1980

Dateline: October 1991 (10 years ago)

A complete guide to buying in the digital-multimeter marketplace is featured in this issue of **Popular Electronics**. Since meters can be confusing , it explains how to make an informed choice when buying one. There are three construction articles with step-by-step instructions for building a precision dual-output power supply, a light-beam communicator, and a sound-effects gadget This issue also covers how wireless got its voice, all the way back to Reginald Fessenden's 1906 radiotelephony. *(Readers turned to* **Popular Electronics** *for their fix of advice, construction projects, and even a little history.)*

1991

2000

www.americanradiohistory.com

Business Buzz

DISPOSABLE CELL PHONES

Need a cell phone only once in a while? Long-term contracts a turn-off? If so, you're a prime candidate for one of the disposable phones soon to be introduced by two different companies. Like prepaid phone cards, and priced from $10 to $30, each phone will provide 30 or 60 minutes of talk time before you toss it out. Telespree will offer one-button, voice-activated plastic phones in six cool colors. First-generation models are for incoming calls only. Dieceland's tiny Phone-Card Phone is the size of three stacked credit cards and has a full numeric keypad. Lower-priced versions are for incoming only; plans are in the works for pricier two-way models. The companies expect their phones' low prices, small size, and flashy colors to resonate with seniors, teens, and those who like to keep a cell phone on hand just for emergencies.

WEARABLE WIZARDRY

Charmed Technology, a Beverly Hills-based developer of wearable technology and Internet products, has unveiled a line that includes bracelets that monitor heart rate and temperature, tie clips that store personal information, and a necklace that can store voice messages. While some of those products are still under development, the Charm-It wearable computer is available now. The two-pound, pocket-book-sized device can be connected via a thin wire to a pair of specially equipped sunglasses for video conferencing.

FACE OFF

ETrue's TrueFace 2D facial-recognition technology is being combined with Bio4's 3D facial-recognition system and Symbol Technologies' 2D PDF417 bar-code system to provide the smallest code size and the most accurate facial biometrics—allowing face recognition to be encoded onto personal ID cards. Coupled with Symbol Technologies' PPT2740 pocket-sized computer for verification of ID cards, the result is a completely mobile, hand-held, wireless face-recognition system that can be used to ID people boarding airplanes, going through customs, and in military and law-enforcement facilities. A digital camera takes a picture of the person, who presents his ID card to a 2D bar-code reader. The TrueFace and Bio4 technologies match the code for the live face against that on the card.

Gadget-Filled Army Concept Truck

Army designers used the Ford F350 heavy-duty pickup truck to develop the military's latest SmarTruck.

The large, black SUV-lookalike is flying down the road with a couple of other vehicles filled with "bad guys" in hot pursuit. Suddenly, it spreads an oil slick, dispenses a smoke screen, and spews tire-puncturing tacks to stop the pursuing vehicles in their tracks. Sounds like something conceived by James Bond's gadgetry expert, 'Q'? No, it is the SmarTruck from the Army's National Automotive Center in Warren, MI.

Urban Arsenal

Based on a Ford F350 heavy-duty pickup, this military concept truck looks somewhat like the Suburbans used by the Secret Service while guarding the President when he is traveling. The black paint job was chosen because the Army's Special Forces, for whom the truck is designed, is more likely today to operate in an urban environment. Thus, black is more appropriate than the traditional jungle camouflage scheme.

The SmarTruck is filled with countermeasure technology like shock door handles to discourage intruders and pepper spray fired from a roof-mounted canister to disperse unruly crowds. Up front and in the rear, what look like ordinary fog lamps are super-bright lights that can startle and disorient any enemy. These lights are like the ones used at the White House to dazzle intruders.

The rear portion of the roof retracts to expose a turret with a high-powered laser weapon operated with a joystick. Bulletproof glass, ArmorMax armor, and various countermeasures are used to prevent attempts to booby-trap the vehicle with explosives.

High-Tech Security Measures

The SmarTruck's night-vision cameras can pan and tilt a full 360 degrees. Images are displayed on flat-panel video monitors that give driver and passengers a view in all directions. Cameras, cell phone, doors, windows and radio are voice-activated. Mine fields can be cleared using a retractable, remotely operated turret equipped with a high-power laser. Electronic fingerprint-identification systems are used for

www.americanradiohistory.com

TYPE

Delphi Steering Systems' Quadrasteer allows both better maneuvering and safer high-speed stability.

vehicle-entry authorization and to access the touchscreen that controls the SmarTruck's arsenal of countermeasures. These fingerprint ID systems are supplied by AuthenTec, Inc. and Biocentric Solutions, Inc. Ruggedized "black boxes" record all events and electronic surveillance activities.

The SmarTruck is fitted with Delphi Steering Systems' Quadrasteer all-wheel steering, which probably will be available on some full-size Chevrolet and GMC pickups for 2002. Besides allowing the huge SmarTruck to maneuver like a compact car, Quadrasteer makes for much easier and safer handling on the highway, especially when towing or carrying a heavy load. The SmarTruck even uses a high-tech fuel, Syntroleum Corp.'s ultra-clean synthetic fuel, which is produced from natural gas.

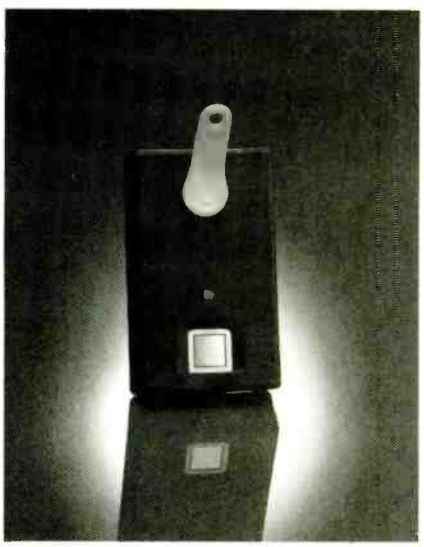

Biocentric Solutions Inc.'s GuardDog biometric reader, used in the SmarTruck prototype, scans a finger and compares the image to encrypted fingerprint minutiae previously stored on a compact stainless-steel armored iButton token. If a match is made, access is granted. The user can carry the token either as a key-chain fob or on a finger ring.

Trickle-Down Technology

While developed for military missions, the technologies found in the SmarTruck could find their way into civilian cars and trucks. Indeed, some, like night vision, already have—you can order it on some Cadillacs, and other upscale brands will offer it soon. The SmarTruck was built by MSX International in the NAC's 21st Century Truck program, which is aimed at developing dual-use military and commercial technology. Integrated Concepts and Research Corporation is responsible for integration of the electronic countermeasures.—by Bill Siuru PT

Mobile Entertainment Center

No one driving or riding in Rosen Products concept vehicle, a customized Lexus LX-470 dubbed the UV-1, will get bored on a long road trip—and there won't be any fighting over what movie to watch or whose turn it is to play a video game. The UV-1 is equipped with seven flat-panel LCD monitors, two 500-mHz computers, five cameras, a GPS system, three DVD players, two PC gaming stations with both joysticks and wireless remote controls, two RF headphones, and bass seat-shakers in the rear seats.

Something for Everyone

The two 8-inch-diagonal, 16 × 9

Research Notes

FASTER THAN A SPEEDING BULLET

Scientists at Sandia National Laboratories have developed a magnetic field that accelerates dime-sized pellets faster than anything except a nuclear explosion does—20 times faster than a bullet fired from a rifle. "The fastest gun in the world" propels the pellets at a speed of 20 km/sec, almost three times the velocity needed to escape the gravitational pull of the earth. Besides its obvious weapons potential, the Sandia Z accelerator can be used to ascertain the effect of high-velocity impacts, such as those that might occur when flying space junk hits an orbiting observatory traveling in the opposite direction.

"TRAFFIC LIGHT" EASES COMPUTER GRIDLOCK

A "traffic light" for computers, originally developed by scientists at NASA Ames Research Center, increases computing speed and efficiency by prioritizing programs. The *P*ortable *B*atch *S*ystem, or PBS, software allows system administrators to specify the order in which programs are processed. NASA Ames' *I*nformation *P*ower *G*rid (IPG) team is working with Veridian Systems, Inc. to enhance the batch-processing system, which operates in multi-platform UNIX environments. The commercial version of the software, called *PBS Pro*, features improved support for workstation clusters and a new Web-based user interface.

SMARTER "BOMB 'BOTS"

It might not be as cute or personable as Haley Joel Osment's *A.I.* character. But in potentially hazardous bomb-disablement missions, the wheeled police robot created by researchers at Sandia National Laboratories can make many of the "how-to" decisions on its own, freeing its operator to make more critical decisions. Sandia developed and installed its *S*andia *M*odular *A*rchitecture for *R*obotics and *T*eleoperation (SMART) in a robot built by REMOTEC Inc. The SMART software automates many of the robot's movements without compromising its operator's command of its behaviors. While its most important benefit is the risk-reduction for human bomb technicians, the software is also expected to make police robots faster, safer, easier to use.

www.americanradiohistory.com

The UV-1 concept car, a custom Lexus LX-470 sports a rainbow paint job by BASF. The front license plate is replaced by a 14-inch LCD monitor.

monitors in the front (along with a rear-mounted camera) replace the vehicle's rear-view mirror. The driver-side monitor also allows the driver to view GPS information or other camera feeds without taking his eyes from the road. The passenger-side monitor—the first legal front-seat entertainment system in the U.S.—can be used to watch movies, to view GPS data or instant messaging, or to monitor back-seat activities via the "mom cam." Two 15-inch-diagonal monitors are suspended from the ceiling in front of the rear seats, where passengers can play separate video games or enjoy their own choice of video entertainment. Another two monitors, each measuring 20-inches diagonal, are installed on motorized mounts that allow them to be raised for viewing at tailgate parties. Finally, a 14-inch-diagonal monitor replaces the front license plate. Besides the rear-view and dual "mom-cam" cameras, there is one focused on the driver's seat and one on the front passenger seat that serves as a vanity mirror. PT

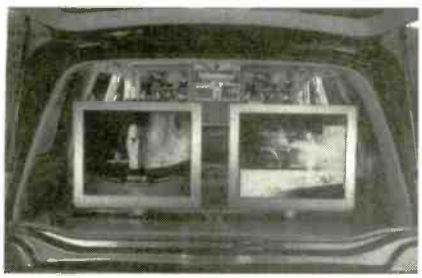

Three of the interior monitors allow DVD movies to be viewed from the passenger seats and video-gaming from the rear seats, and the fourth monitor provides the driver with GPS data while serving as a rear-view mirror.

Virtual Geographic Information System (VGIS)

Researchers at the Georgia Institute of Technology have been working on a high-tech tool for predicting severe weather in a timely and accurate manner. The *VGIS* (*V*irtual *G*eographic *I*nformation *S*ystem) is a platform that receives gathered storm data and converts it into a detailed, three-dimensional model of suspicious storm systems that can be viewed on a personal computer's desktop monitor or projected on a large-screen. Scientists and researchers are hoping that the VGIS will provide ample warning to save lives and property in severe weather environments.

Implementation

Developers foresee this system becoming integrated with local and national weather research facilities in

www.americanradiohistory.com

Spotlight on:

Honeybee Robotics

The Flower That Yields The Honey

Now that the busy pollination season has passed, we were able to get the buzz on the past, present, and future of Honeybee Robotics. A recent interview with Mame McCutchin, Public Relations spokesperson for Honeybee, tells the sweet story of this company, which is appropriately located directly above a bakery in Little Italy.

Integral Ingredients

Founded in 1983 by the current President Chris Chapman and Chairman Steve Gorevan, along with a third man no longer working for the company, Honeybee Robotics has expanded both the size of its hive and the number of projects. There are 19 worker bees in the hive: one president, one chairman, one administrator/researcher, one marketing/PR person, and 15 engineers.

Recipes For Sweet Success

The company is currently working on about five flight projects, ranging from NASA to the Air Force. RAT—an acronym for *R*ock *A*brasion *T*ool—is flight equipment that will be used for NASA's 2003 twin-rover mission to Mars, entitled MER—*M*ars *E*xploration *R*over. There are two NASA research contracts: Deep Drill, which is testing the viability of dry drilling down 60 feet into rock and String Feeder, which is testing the viability of automated string feeders for 60 foot-long drill string. They are also working on developing flight equipment for the Air Force Research Lab. Their fifth project, W.I.S.O.R., was still being fine-tuned (at the time of the interview) and should be in the trenches by the time this text sees publication. W.I.S.O.R. is an acronym for Wielding and Inspection Steam Operations Robot. New York City's Con Edison contacted the unit's designers. The robot has been outfitted with a new camera system that could withstand heat and condensation. His truck has been outfitted with a crane and an onboard control room for his operator. It is important to mention that ⅔ of WISOR is at Honeybee and ⅓ has been delivered to Con Ed.

More Delicious Delights

Honeybee is in the process of revamping their Web site, *www.honeybeerobotics.com*. Those wanting to pollinate their minds will be able to fly from link to link, gathering more information with the new expert navigation and high-tech design. PT

➤ 256k MRAM Chip

Tired of waiting for your PC to boot up and data to load? With its fast read and write speeds, unlimited read and write cycles, and cost advantages, the 256-kilobyte *M*agnetoresistive *R*andom *A*ccess *M*emory (MRAM) chip developed by Motorola Labs, in partnership with the DigitalDNA Laboratories of the Semiconductor Products Sector, could put an end to such delays. And it just might replace existing memory technologies such as Flash, DRAM, and all but the fastest SRAM. The 256k nonvolatile MRAM is based on a memory cell defined by a single transistor and a single *M*agnetic *T*unnel *J*unction (MTJ) with read and write cycles of less than 50 ns.

The MRAM chip is designed to allow a computer's programs and data to remain in its local memory, even when the power is off, eliminating the time-consuming process of reloading information into local memory from the hard drive every time the computer is turned on. It can also get rid of delays when powering up cell phones and other mobile electronics. Because MRAM technology allows the integration of multiple memory options within a chip, the necessity and expense of multiple memories can be eliminated and equipment size reduced. PT

order to embellish storm detection software already in use. Future plans may even include participation from the National Weather Service, who may use the data obtained from VGIS when issuing watches and warnings.

According to Bill Ribarsky of the Georgia Tech College of Computing, "... forecasters will be able to make decisions faster and more precisely. For example, they might see a storm here and make a precise prediction that it's going to affect *this* community in *this* way. Forecasters...will have more information—such as predicting a storm's path based on terrain...and...human activities." Ribarsky also added that the system should be able to predict general areas of severe weather close to six hours in advance.

A Working Prototype

A scaled-down version of VGIS is already being put to work in Northern Georgia. Georgia Tech's Severe Storm Research Center has been pumping the data it receives from the Georgia branch of the National Weather Service to the visual platform. Nick Faust of the Georgia Tech Research Institute explains that the three-dimensional storm models have given new insight into the 3-D nature of storms.

The project is slated for completion in two years and will be ready to obtain information from other stations beyond Northern Georgia. Towns that have been plagued with severe weather, such as tornadoes and flash floods, will hopefully benefit from the VGIS once it is incorporated into the already complex weather research network. PT

MULTIMEDIA on the PC!

What is Multimedia? What can it do for you? It can do lots of nice things! This 184-page book helps you create your own multimedia presentation. Multimedia applications by people like you can revolutionize educational and business applications as well bring more FUN, FUN, FUN into your leisure computer activities.

Mail coupon to:

Electronics Technology Today, Inc.
P.O. Box 240
Massapequa Park, NY 11762-0240

Please send me my copy of *Multimedia on the PC* (PCP120). I enclose a check or money order for **$18.45** to cover the book's cost and shipping-and-handling expenses. NY state residents must add local sales tax.

Name _____

Address _____

City _____ State _____ ZIP _____

All orders must be paid in U.S. funds only. Sorry, no orders accepted outside of USA and Canada. Please allow 6-8 weeks for delivery.

MA02

www.americanradiohistory.com

NEW LITERATURE

Great Sound Stereo Speaker Manual, Second Edition

by David B. Weems and G. R. Koonce
McGraw-Hill
2 Penn Plaza, 12th Floor
New York, NY 10121
800-2MCGRAW
www.books.mcgraw-hill.com
$34.95

Were you one of those high-school students whose stereo system cost more than the actual car? Now you can build a customized, state-of-the-art stereo system from ground zero with this easy-to-follow guide. It teaches you how to assemble professional-quality systems through equipment-enhancing and computer-aided-design techniques. Either in your car or in your home, you will now be able to understand the ins and outs of your high-tech system.

Electrical Circuit Theory And Technology, Second Edition

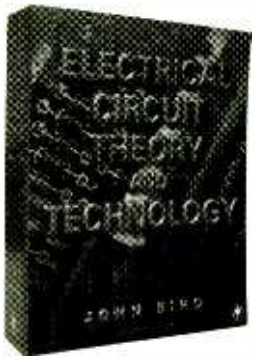

by John Bird
Newnes, Butterworth-Heinemann
225 Wildwood Ave.
Woburn, MA 01801
800-366-2665
or 781-904-2500
www.newnespress.com
$39.95

If you are a student looking to progress to higher levels of study, this tutorial in electrical and electronic principles, circuit theory, and electrical technology provides over 1000 problems (answers included) that you can learn from and practice at your own pace. This follow-up edition provides new material on semiconductor diodes, transistors, and operational amplifiers. It is an educational manual with a greater emphasis on problem-solving than theory.

Instrumentation & Measurement Pocket Book, Third Edition

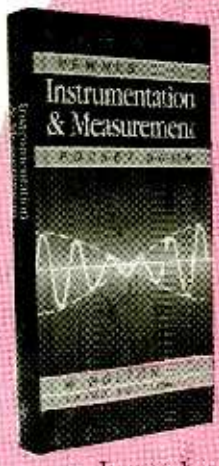

by W. Bolton
Newnes, Butterworth-Heinemann
225 Wildwood Ave.
Woburn, MA 01801
800-366-2665 or 781-904-2500
www.newnespress.com
$24.95

Have you ever been out in the field, confused by all of the gibberish that manufacturers can use to explain their products? This book explains the practical measurement of quantities such as temperature, radiation, stress and strain, and chemical composition. It goes beyond its predecessor by expanding on microprocessors, microcontrollers, and digital interfacing. It addresses its readers with comprehensible tables, diagrams, and formulae.

CMOS Sourcebook

by Newton C. Braga
Sam's Technical Publishing
5436 W. 78th St.
Indianapolis, IN 46268-3910
800-428-7267
www.samswebsite.com
$39.95

Become a better electronics designer by learning the particulars of CMOS (Complimentary Metal Oxide Semiconductors) technology. This book shows how using CMOS to perform simple functions will make your applications easier. Building upon a digital electronics foundation, it teaches how CMOS interfaces with SCRs and TRIACs, and also contains a useful CD-ROM with datasheets for the CMOS 4000 family.

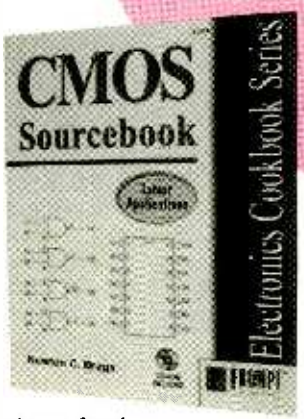

Telephone Installation Handbook, Second Edition

by Steve Roberts
Newnes, Butterworth-Heinemann
225 Wildwood Ave.
Woburn, MA 01801
800-366-2665 or 781-904-2500
www.newnespress.com
$34.95

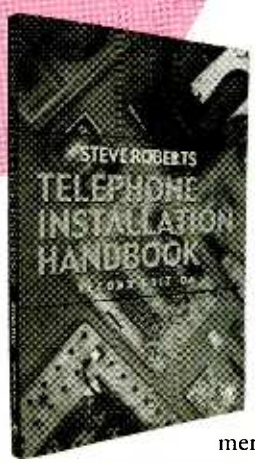

This book is wonderful for anyone interested in installing telephone extensions and systems—no matter what your prior knowledge or experience—for the home or small businesses. Covering new technological advances such as ISDN and CAT 5 cabling, this book also provides knowledge of regulations, techniques, and additional necessary information such as supplier addresses. There are extensive descriptions on tools, test equipment, and other useful materials.

www.americanradiohistory.com

Seasons Greetings

Plug a Friend into Poptronics®

and Save $44.89*

This holiday season you can give an electrifying gift ... plug a friend into ***Poptronics®*** *and brighten the whole new year! Whether electronics is your friend's livelihood or hobby, your gift will illuminate the whole spectrum of electronics throughout the coming year and provide a monthly reminder of your friendship.*

Poptronics® Magazine will keep your friend informed and up-to-date with new ideas and innovations in all areas of electronics technology ... computers, video, radio, stereo, solid-state devices, satellite TV, medical electronics, communications, robotics, and much, much more.

Poptronics® combines the best attributes of ***Electronics Now*** and ***Popular Electronics***. It is *the* magazine for the hands-on electronics activist. We will be presenting articles on just about everything electronic—from satellite TV equipment to DVDs, gadgets and gizmos to energize your life, audio amplifiers, professional service features, PC-related projects, and much, much more.

PLUS: A selection of computer-oriented columns that explore the digital realm from the inner workings of a PC to the latest the Web has to offer. On the electronics side, there is something for everyone—from the beginner (Basic Circuitry and Q&A) to the expert. Whether your interest is fixing equipment (Service Clinic), tinkering with robots (Robotics Workshop), or adventuring to the farthest reaches of electronics and science (Amazing Science)—***Poptronics®*** takes you there.

SAVE $44.89* ... OR EVEN $89.78* ... For each gift of ***Poptronics®*** you give this holiday season, you save a full $44.89* off the newsstand price. And as a gift donor, you're entitled to start or extend your own subscription at the same Special Holiday Gift Rate—you save an additional $44.89*!

No need to send money ... if you prefer, we'll hold the bill till January, 2002. But you must rush the attached Gift Certificate to us to allow time to process your order and send a handsome gift announcement card, signed with your name, in time for the holidays.

So do it now ... take just a moment to fill in the names of a friend or two and mail the Gift Certificate to us in its attached, postage-paid reply envelope. That's all it takes to plug your friends into a whole year of exciting projects and new ideas in ***Poptronics®***!

*Newsstand price—8 issues @ $4.99 each
4 issues @ $5.99 each

www.americanradiohistory.com

Telecommunications Demystified

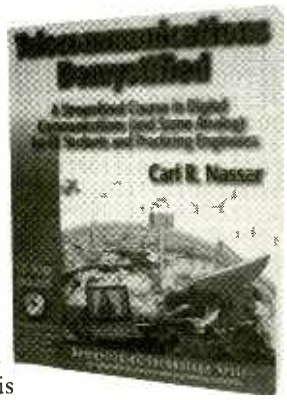

by Carl R. Nassar
LLH Technology Publishing
3578 Old Rail Road
Eagle Rock, VA 24085
540-567-2000
www.LLH-Publishing.com
$59.95

Applicable to both electrical engineering students and as a professional reference, this book uncovers the secrets of telecommunications from theory to application. Within the text is information on source and channel coding, base-band and carrier modulation, estimation and synchronization, and much more. There is also some coverage of analog communications. The full package contains a CD-ROM, MATLAB tutorials, and an electronic version of the text.

The Book Of JavaScript

by David Thau
No Starch Press
555 De Haro St., Suite 250
San Francisco, CA 94107
415-863-9900
www.nostarch.com
$29.95

Give more life to your Web site by mastering JavaScript. Learn how to perform image swaps and rollovers, how to work with cookies and alarms, and how to use Dynamic HTML—all from the man who has earned popularity and fame from his *www.Webmonkey.com* tutorials. The book comes with a CD-ROM and a complete reference section for all JavaScript objects and functions.

Exploring Microsoft Office XP

by John Breeden II and Michael Cheek
Sam's Technical Publishing
5436 W. 78th St.
Indianapolis, IN 46268-3910
800-428-7267
www.samswebsite.com
$29.95

Many people have reached the potential of their *Word*, *Excel*, *PowerPoint*, and *Outlook* programs and are now looking for the next step. *Office XP* offers new features in an easily understandable language, and this book explains them all. There is information on the peripheral programs, along with over 125 screen shots and notes throughout the text so that the book becomes a quick guide, emphasizing the most important aspects of XP.

Secrets Of RF-Circuit Design, Third Edition

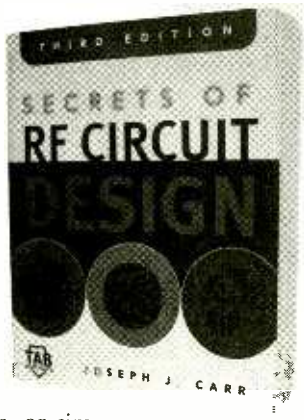

by Joseph J. Carr
McGraw-Hill
2 Penn Plaza, 12th Floor
New York, NY 10121
800-2MCGRAW
www.books.mcgraw-hill.com
$39.95

Ideal for beginners, RF technicians, or ham-radio operators, this step-by-step book deals with building the circuits that make wireless technology what it is. Whether it is designing or constructing receiver circuits or preselectors, bridges, amplifiers, or simple-spectrum analyzers, the text is both innovative and comprehensible. In addition to touching upon UHF and microwave components, there is a full parts list and components sources as a resource.

Essentials Of Electromagnetics For Engineering

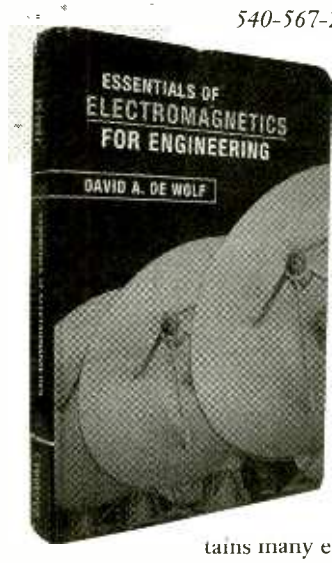

by David A. De Wolf
Cambridge University Press
40 West 20th St.
New York, NY 10011-4211
540-567-2000
www.cambridge.org
$69.95

Highlighting the physical principles behind the mathematical results makes this introduction to electromagnetics simple and straightforward. Beginning with Coulomb's law and basic electrostatics, the author gradually advances to magnetostatics and Maxwell's equations, wave propagation and guides, and even touches upon numerical methods. The book contains many exercises and can be used as a text book for undergraduates. P

www.americanradiohistory.com

A Hands-on Electronics REPORT

M-Systems DiskOnKey

This compact and portable storage device allows for Mac/PC compatibility and more.

M-Systems' first consumer proposition, the *DiskOnKey*, has encountered a large market of interest since its release. The DiskOnKey uses the universal serial bus (USB) port for instant compatibility with any Mac 9.0 and higher, Windows 2000, Me, OS, and Linux operating system by acting as a removable hard drive. It is fully plug-n-play, with the sole exception of use with Windows 98, which doesn't support the full USB, and so requires a driver to be installed before operation. It is a portable and pocketable personal storage device providing driverless interoperability.

Never Leave Home Without It. For computer users on the run, the lightweight and durable DiskOnKey can go anywhere and withstand most environmental conditions. It is designed to resemble a miniature pen, fitting in the palm of your hand, with a clip for pockets and a ring for key chains. It is a 82mm × 15mm × 23mm piece of storage perfection. The actual storage medium is protected within a hard casing, reducing the chance of information damage. This design contrasts to the traditional floppy drive and diskette, where the slide is more susceptible to the outside elements.

The configuration is reliable and rugged, allowing for easy transportation. I don't have to worry any more that my storage medium, and therefore information, will be damaged by being carried in a backpack. For businessmen with briefcases and vacationers with suitcases, there is no more concern while traveling. It even operates up to 10,000 feet altitude.

There are no moving parts, no cables, and no batteries required. A USB port (low-power device) is the only needed supply and takes the place of an adapter. The DiskOnKey is the only licensed flash-data-storage technology using USB format. The read/write power consumption is 80–95 mA, performance is from 12 MBits/sec to 960 Mbytes/sec, and it can be plugged in and unplugged at any time during operation without loss of data or need for restarting. With an onboard CPU that handles data manipulation, there is no burden or energy consumption on the part of the PC.

As shown here, the DiskOnKey is just as portable as your passport. Also, the tough plastic enclosure protects your data from possible damage while inside your pocket.

What's Your Pleasure? No matter what your computer interests are, the DiskOnKey allows for versatile storage. With its own CPU, it is able to download and store a range of items. For travelers and commuters, eBooks, e-mail addresses, and online magazine and newspaper articles can be brought along on the journey. Photos and videos can be saved, making for advanced, 21st century family photo albums or a larger graphics selection at work in the office or home. As long as Napster can avoid e-eviction and new methods of acquiring songs from the Internet continue to come into the forefront, music lovers can even leave the CDs in the stereo and simply bring along their files.

It offers excellent options for businessmen: privacy, security, and CPU integration, all with a wireless interface. The host computer will instantly detect it and recognize it as a supplementary hard drive; hence, it is easy to use. Just plug it in. Now, there is the freedom of working on another person's computer or laptop without having to save and leave personal files in their system. As a student, I love my PC and will defend it against any Mac, but my school's graphics curriculum is Mac-based and therefore provides only Macs in the labs. I needed a solution to my late-night creativity binges and the desire to work on assignments in the comfort of my room. The DiskOnKey enabled me to begin my projects at home and refine them in the lab.

Shop 'till You Drop. DiskOnKey is now available with a storage

(Continued on page 38)

www.americanradiohistory.com

ELECTRONIC TECHNOLOGY TODAY INC.

P. O. Box 240 • Massapequa Park, NY 11762

INVENTORY BLOWOUT SALE

30% OFF

FREE GIFT
With any order over $15
(while supplies last)

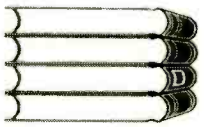

*** ALL CANADIAN CHECKS MUST CLEAR THROUGH AN AMERICAN BANK**

BP07	100 Radio Hookups	$3.00	
BP36	50 Circuits Using Germanium, Silicon & Zender Diodes	$2.99	
BP44	IC 555 Projects	$5.99	
BP56	Electronic Security Devices	$3.99	
BP64	Semiconductor Technology Elements of Elect Book 3	$5.99	
BP74	Electronic Music Projects	$3.99	
BP76	Power Supply Projects	$3.99	
BP78	Practical Computer Experiments	$2.99	
BP80	Popular Electronic Circuits	$3.99	
BP103	Multi-Circuit Board Projects	$2.99	
BP109	The Art of Programming the IK ZX81	$3.99	
BP112	A Z-80 Workshop Manual	$5.99	
BP114	The Art of Programming the 16K ZX81	$3.99	
BP115	The Pre-Computer Book	$2.99	
BP124	Easy Add-On Projects for the Spectrum, ZX81 & ACE	$3.99	
BP143	An Intro to Programming the Atari 600/800 XL	$2.99	
BP148	Computer Terminology Explained	$2.99	
BP154	An Introduction to MSX Basic	$3.99	
BP156	An Introduction to QL Machine Code	$3.99	
BP187	A Prac Ref Guide to Word Pro Amstrad PCW8256/PCW8512	$7.99	
BP190	More Advanced Electronic Security Projects	$3.99	
BP194	Modem OPTO Device Projects	$3.99	
BP232	A Concise Introduction to MS-DOS	$3.99	
BP256	An Intro to Loudspeakers and Enclosure Design	$3.99	
BP264	A Concise Advanced User's Guide to MS-DOS	$3.99	
BP272	Interfacing PCS and Compatibles	$5.99	
BP290	An Intro to Amateur Communications Satellites	$5.99	
BP297	Loudspeakers for Musicians	$6.99	
BP299	Practical Electronic Filters	$6.99	
BP302	A Concise User's Guide to Lotus 1-2-3 Release 3.1	$5.99	
BP304	Projects for Radio Amateurs and S.W.L.S	$5.99	
BP317	Practical Electronic Timing	$6.99	
BP320	Electronic Projects for Your PC	$5.99	
BP322	Circuit Source Book 2	$6.99	
BP329	Electronic Music Learning Projects	$6.99	
BP332	A Beginners Guide to TTL Digital ICS	$6.99	
BP333	A Beginners Guide to CMOS Digital ICS	$6.99	
BP334	Magic Electronic Projects	$6.99	
BP355	A Guide to the World's Radio Stations	$7.99	
BP359	An Introduction to Light in Electronics	$6.99	
BP367	Electronic Projects for the Garden	$6.99	
BP370	The Superhet Radio Handbook	$6.99	
BP371	Electronic Projects for Experimenters	$6.99	
BP374	Practical Fibre-Optic Projects	$6.99	
BP378	45 Simple Electronic Terminal Block Projects	$6.99	
BP379	30 Simple IC Terminal Block Projects	$6.99	
BP384	Practical Electronic Model Railways Projects	$6.99	
BP385	Easy PC Interfacing	$6.99	
BP391	Fault-Finding Electronic Projects	$6.99	
BP392	Electronic Project Building for Beginners	$6.99	
BP393	Practical Oscillator	$6.99	
BP396	Electronic Hobbyists Data Book	$7.99	
BP401	Transistor Data Tables	$7.99	
BP411	A Practical Intro to Surface Mount Devices	$6.99	
BP413	Practical Remote Control Projects	$7.99	
BP416	Practical Alarm Projects	$6.99	
BP439	Troubleshooting Your PC	$8.99	
PCP107	Digital Logic Gates and Flip-Flops	$10.99	
PCP112	Digital Electronics Projects for Beginners	$10.99	
PCP114	Advanced MIDI Users Guide	$10.99	
ETT1	Wireless & Electrical Cyclopedia	$4.99	

PRICES DO NOT INCLUDE SHIPPING & HANDLING. ALL SALES ARE FINAL, NO RETURNS

ORDER FORM

Book No.	Title	Price	No. of Copies	Cost

SHIPPING COSTS

$0.01 to $5.00	$2.00	$20.01 to $30.00	$5.00
$5.01 to $10.00	$3.00	$30.01 to $40.00	$6.00
$10.01 to $20.00	$4.00	$40.01 to $50.00	$7.00
$50.01 and above	$8.50		

Total Amount $	
- 30% off	
Subtotal	
Local NY State Sales Tax	
Add shipping cost (see table)	
TOTAL COST $	

Name _____

Address _____

City _____ State _____ Zip _____

If you wish to use a Credit Card:

☐ MasterCard ☐ Visa Expire Date /

Card No. _____

Signature _____

Allow 6-8 weeks for order to be fulfilled.

Please return this order form to:
ELECTRONIC TECHNOLOGY TODAY, INC.
P.O. Box 240
Massapequa Park, NY 11762-0240

Telephone Orders: If you wish to place your credit-card order by phone, call 631/592-6720. Automated order taking system functions 24 hours a day. Have your credit-card ready. Sorry, no orders accepted outside of U.S.A. and Canada, New York State Residents must add applicable sales tax. Offer expires 12/21/01.

ET11

www.americanradiohistory.com

ELIZABETH JAMISON

mailto: technoscope@gernsback.com

WHAT IS THE INTERNET?

More than half of Americans are online everyday; surfing the web, supporting e-commerce with prolific Internet spending, swearing by each daily e-mail, and even entrusting financial account information to virtual banking institutions. In this new millennium, we find ourselves living in an "Internet-Friendly" world, and this extraordinary technology is becoming more widespread by the minute. Each day, approximately 50% of Americans spend hours exploring the Internet. So what exactly is this virtual world?

Confusion about this widespread, virtually unavoidable technology is often the cause of fear and suspicion in the minds of legions of Internet newbies. What Web-surfing, cookie sending, e-consumer *hasn't* wondered about online security and privacy issues? To some, the land of virtual connectivity is synonymous to a new millennium Big Brother, and his eyes are everywhere.

Not to fear, however. With a little understanding of the WWW, you too can let go of your suspicion and have fun while you surf. You may even discover what millions of individuals already have—that the Internet, with its myriad of capabilities and enormous e-commerce potential, is an electronic realm filled with infinite opportunity.

A NETWORK IS BORN

Contrary to popular belief, the driving force behind the development of the Internet was to provide an economical way to connect costly computer resources, not to create a network that would survive potential disasters like nuclear war. Defense measures were actually a small component. According to the Computer Museum History Center, in the 1960s before the word "Internet" was coined, there were

INTERNET GROWTH

DATE	HOSTS	DATE	HOSTS	NETWORKS	DOMAINS
12/69	4	07/89	130,000	650	3,900
06/70	9	10/89	159,000	837	
10/70	11	10/90	313,000	2,063	9,300
12/70	13	01/91	376,000	2,338	
04/71	23	07/91	535,000	3,086	16,000
10/72	31	10/91	617,000	3,556	18,000
01/73	35	01/92	727,000	4,526	
06/74	62	04/92	890,000	5,291	20,000
03/77	111	07/92	992,000	6,569	16,300
12/79	188	10/92	1,136,000	7,505	18,100
08/81	213	01/93	1,313,000	8,258	21,000
05/82	235	04/93	1,486,000	9,722	22,000
08/83	562	07/93	1,776,000	13,767	26,000
10/84	1,024	10/93	2,056,000	16,533	28,000
10/85	1,961	01/94	2,217,000	20,539	30,000
02/86	2,308	07/94	3,212,000	25,210	46,000
11/86	5,089	10/94	3,864,000	37,022	56,000
12/87	28,174	01/95	4,852,000	39,410	71,000
07/88	33,000	07/95	6,642,000	61,538	120,000
10/88	56,000	01/96	9,472,000	93,671	240,000
01/89	80,000	07/96	12,881,000	134,365	488,000
		01/97	16,146,000		828,000
		07/97	19,540,000		1,301,000

Information provided by Computer Museum History Center

Table 1. The table above lists the amount of hosts, networks, and domains that existed between December 1969 and July 1997.

www.americanradiohistory.com

only about 10,000 computers in the entire world. They were primitive and difficult to program, contained just a few thousand words of magnetic core memory, and were priced in the hundreds of thousands of dollars. This first large-scale network provided a way to connect these computers.

Although there are conflicting theories regarding the actual date the Internet was invented, October 29, 1969 is most commonly referenced as the birthday of the Internet. This first network component grew out of funding by the U.S. Advanced Research Projects Agency (ARPA), later named the Defense Advanced Research Projects Agency (DARPA), to develop a communications system among government and academic computer research laboratories.

In 1985, the National Science Foundation (NSF) created NSFNET, a series of networks that would facilitate research and education communications. Based on ARPANET protocols, the NSFNET was responsible for the creation of a national backbone service that was provided free of charge to any U.S. research and educational institution. Regional networks were simultaneously constructed to link individual institutions with the national backbone service.

As people began to realize the potential of this network, NSFNET grew rapidly and new software applications were created to make access easier. Corporations like Sprint and MCI began to build their own networks, which they linked to NSFNET. Today, commercial firms and other regional network providers have taken over most of the operation of the Internet, and the National Science Foundation has withdrawn from the backbone industry.

The Internet wasn't always a vast mecca of Web sites and business advertisements. It was originally designed for electronic mail, file transfer using ftp (file transfer protocol), bulletin boards, and newsgroups. The World Wide Web, which is one component of the Internet, enables simple navigation of Web sites through a graphical interface. During the 1990s, people started using Web sites to advertise and to create a new form of business—e-commerce. Today, the "Web" is the most important part of the Internet.

"In the Beginning, ARPA created the ARPANET.

And the ARPANET was without form and void.

And darkness was upon the deep. And the spirit of ARPA moved upon the face of the network and ARPA said, 'Let there be a protocol,' and there was a protocol.

And ARPA saw that it was good. And ARPA said, 'Let there be more protocols,' and it was so. And ARPA saw that it was good.

And ARPA said, 'Let there be more networks,' and it was so."

— Danny Cohen

Although some may picture the Internet as a force unto itself lurking somewhere in the vast reaches of cyberspace, the reality is not nearly as intriguing. Simply put, the Internet is an interconnected network of computers. It's not just any network, though. It is *The Network* to beat all others, and it's growing larger and more complex by the second. This super-network is based on a common addressing system called TCP/IP (Transmission Control Protocol/Internet Protocol). Transmission Control Protocol splits large files into numerous small files, or packets, and assigns each with sequencing and addressing information. Upon arrival at their final destination, the packets are reassembled into their original file. Internet Protocol consists of a hierarchical addressing system that controls the routing of these packets.

COMMON TERMS

For people who were not born with a silver mouse in one hand, it is easy to confuse certain terms and products with the Internet itself. In fact, it is not beyond many "experienced" cybertravelers to misunderstand how particular aspects of the Internet fit together. Before you hook up your modem and connect with the rest of the world, it is important to understand the basic facets of the Net. The more you know about it, the smoother your ride and the clearer your vision will be of where you want to go. Here are some common internet terms and a brief description of each.

- **Internet Service Provider:** An Internet Service Provider (ISP) is *not* the Internet. It is a company that provides access to the Internet, like an on-ramp leads to a highway. For most ISPs, there is a monthly fee ranging from $9.00-$20.00, and for this we get access to the Internet. There are innumerable companies that provide Internet access. Some include major telecommunications firms like AT&T, or local telephone companies. A company such as Earthlink, which provides just online access, not telephone service, can also connect you to the Internet. One of the faster ways to surf the Web is through your local cable company, which provides access over cable lines (much faster link than telephone connections). Whichever you choose, just remember that your ISP is not the Internet—just the door that will take you inside the Web.

- **Online Service Provider:** An online service provider, which offers much more than just access to the Internet, is like an ISP but with a kick. AOL (America Online) is one such example. AOL provides proprietary content like games, access to sports, news and research and chat rooms. These little extras are meant to be used with the online service and are usually not available to the general users of the Internet.

- **Web Browser:** Like a vehicle on a superhighway, the browser is the transmission that propels us on our journey throughout the Web. For your computer to view the information and documents found on the Internet, you first need to load a browser. While various navigational tools are available, the two most popular are Netscape Navigator (Netscape Communications), and Internet Explorer (Microsoft Corporation). Both enable the Web surfer to view Web pages, and both support Java (high level programming language developed by Sun Microsystems), JavaScript, (a sim

(Continued on page 52)

www.americanradiohistory.com

TED NEEDLEMAN

mailto: peakcomputing@gernsback.com

Lots of Choices in Video Cards

One of the biggest benefits of modular computer design is that you can upgrade specific areas of a PC without having to replace the entire computer. That's really what this column is all about, not only gaining, but maintaining, Peak Computing capability through selective upgrades.

The one area of a PC that seems to get upgraded the most often is the video card. The reason for this is pretty simple—no other subsystem (except, perhaps, the CPU itself) continues to advance in capabilities so rapidly. The major video chipset vendors, including Nvidia and ATI Technologies, seem to be bringing out a new generation of chipsets every six to eight months. Each generation provides not only better performance than the previous one, but improved graphics capabilities.

It wouldn't really matter much, except that game developers are quick to take advantage of these improved capabilities. Since game players make up a large percentage of those PC users in the market for video-system upgrades, a new video card every six, eight, or twelve months seems to be pretty common.

You don't, however, have to be a rabid game player to start wishing for a new card. The enhancements and improvements haven't been just in the area of better game play. This time around, we'll take a look at a trio of some of the new offerings for all kinds of video enthusiasts.

The Hercules 3D Prophet Ultra features a GeForce2 Ultra chipset, 64 MB of DDR RAM, and a processor whose core clock speed equals 259 MHz. Included in the software is 3D Tweak that allows the processor to be overclocked; hence the enormous fan for cooling the board.

PUTTING THEM TO THE TEST

Testing a video card can be done several ways. Some testers use a frame rate capability that's built into games such as *Quake*. From the game's Console, you simply issue a command like TIMEDEMO 0, and the game will run and calculate the displayed frame rate.

This is fine if all you are interested in are full-out frame rates. A more comprehensive set of video benchmarks is available from a company with the unlikely name of MadOnion. Previously called FutureMark, this vendor produces a professional-level set of DirectX 8-based video benchmarks called the 3DMark2001 Benchmark. A free copy similar to the one we use is available for downloading from MadOnion's Web site (*www.madonion.com*), if you have the time. It's a 40-MB file, so even with a broadband Internet connection it takes a while to download. The Professional version of 3DMark2001 adds a few features, like the Result Browser that enables you to examine several cards' results side-by-side.

The 3DMark2001 Benchmark does have a frame-rate test. In fact, it has several, with "demo" games of varying complexity programmed to simulate a

www.americanradiohistory.com

variety of gaming scenarios. The benchmark also automatically captures rendered images from the video card during the testing. A set of reference images is included, so you can compare the captured images with the reference images and check for artifacts and aliasing, as well as color anomalies.

In fact, the 3DMark2001 Benchmark performs 20 different tests, and can be set to run once, continuously, or a specified number of times.

A SMALL WORLD AFTER ALL

Of the three cards we tested, two have chipsets from Nvidia. In the past year, a number of popular chipset and video card vendors have gone belly up. Diamond Multimedia was acquired by S3 (now SONICblue) and, while still in business, is out of the video card market. 3dfx, which once had a good share of the market with its Voodoo cards, bought STB, and then went under itself.

Matrox Graphics is still in business, as is ATI Technologies. Both of these are Canadian companies, with ATI having the greater share of the market. Right now, Matrox builds its own cards using only its own chipsets. ATI supplies many of the video chipsets used in laptops, but until recently reserved its RAGE and RADEON desktop chipsets for its own branded products. The company has recently announced that it will start to supply video chipsets to other vendors, hoping to eat into some of Nvidia's popularity in the OEM market.

Nvidia doesn't actually produce video cards, only the chipsets for them. The very latest video chipset from this vendor is its GeForce3. At the moment, however, GeForce3 cards are hard to come by, and expensive when you can find them. The GeForce3 chipset builds on the GeForce2's hardware handling of transform and lighting (T&L) by providing programmable vertex shading and pixel shading. By allowing a software developer to determine, from within the application, exactly how this will take place, the GeForce3 promises to deliver outstanding performance and even more realistic 3D graphics. In fact, Microsoft has selected the GeForce3 chipset to provide the graphics in its upcoming XBox game console.

The downside of the GeForce3 is

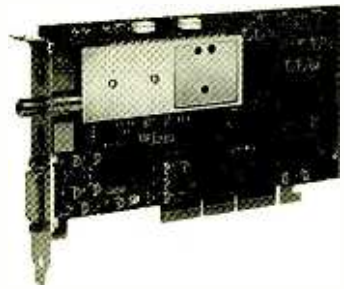

ATI Technologies presents the RADEON ALL-IN-WONDER, which offers 32 MB of RAM, a RADEON chipset, and multiple I/O option: including S-Video, audio, and composite video. Another feature built-in is a cable-ready tuner that allows users to plug their PC into their cable box and enjoy scanning any unscrambled channels.

that software has to be specifically written to take advantage of these new features. Otherwise, the performance is pretty much along the level of the less expensive GeForce2 Ultra. Most games written to take advantage of the GeForce3 won't be out for several months. Given Nvidia's past history, it's likely that by that time, a newer version of the GeForce3 will be available. That's why we tested cards with the more affordable GeForce2 chipset.

INEXPENSIVE IS NICE

The GeForce2 chipset actually comes in three versions, each providing a higher degree of performance. At the entry level is the GeForce2 MX. This is designed for less expensive video cards, but still offers hardware T&L and the GeForce2 architecture. A step up in performance is the GeForce2 GTS. At the top of the line is the GeForce2 Ultra.

One entry-level card, using the GeForce2 MX chipset, is the $99 MagicVideo 3DMX from I/OMagic. This vendor has a large presence at retail—with products ranging from a high-end MP3 jukebox to CD-RW and DVD drives. We had some initial problem with the 3DMX, simply because it did not come with DirectX 8 drivers, which the 3DMark2001 benchmark requires to run. After downloading the Nvidia reference drivers from Nvidia's Web site, we were up and running.

For the very reasonable price, the MagicVideo 3DMX is a pretty basic card. It has only a DB-15 VGA output. While it does come with 32 MB of video RAM, this memory is SDRAM, rather than the faster DDR RAM. There's also no DVD player included, though the one that came with our DVD drive worked just fine.

At the same time, the MagicVideo performed very nicely, both on the 3DMark2001 tests as well as when actually playing real games. It doesn't have some of the fancy features that the other cards we tested offer, but for the price, it's a great way to upgrade a video card that's a year or two old.

SOURCE INFORMATION

ATI Technologies, Inc.
905-822-2600
www.ati.com

Hercules, Inc.
514-279-9960
www.hercules.com

I/Omagic Corporation
714-953-3000
www.iomagic.com

PLAY IT TO THE MAX

On the other side of the performance and feature scale is the Hercules 3D Prophet II Ultra. As this is written, the price on the card is still around $400, but as more GeForce3 cards become widely available, you can expect the price to drop precipitously. Hercules was one of the first companies to produce a graphics card for then new IBM PC. Over the years, the company fell into financial difficulty and eventually went belly up. Canadian card vendor Guillemot bough the rights to the name, and relaunched Hercules with a line of new products to great success.

The most obvious feature of the Hercules 3D Prophet Ultra is the GeForce2 Ultra chipset, which has a fan mounted on the RAMDAC to keep it at a comfortable operating temperature. That's especially necessary, as the card comes with a utility called 3D Tweak that lets you overclock the chip for increased performance. Performance is hardly sluggish to start with, as the Ultra has a core clock speed of 259 MHz compared to the 150-MHz speed of the GeForce2 MX. Also included on the 3D Prophet Ultra is 64 MB of fast DDR RAM.

At this price level, you expect a premium card, and the 3D Prophet Ultra delivers. It has outputs for VGA (a standard DB-15 connector), DVI (the

(Continued on page 58)

www.americanradiohistory.com

REID GOLDSBOROUGH

mailto: digitaldomain@gernsback.com

Supercomputing Enhanced: Make A Power Play With Your Computer

Wouldn't it be something if you could combine the power of your computer with those of hundreds, thousands, even millions of others? If you're connected to a local area network at work or the Internet at home or the office, you're already experiencing the benefits of computer connectivity. Typically, though, you're just sharing information, programs, or storage space with other computers. You're not pooling the processing power of each PC.

"Distributed computing" takes the network one step further. In many ways, it's an out-of-this-world concept, and it's thus fitting that the first popular distributed computing project involves the search for intelligent life elsewhere in the universe.

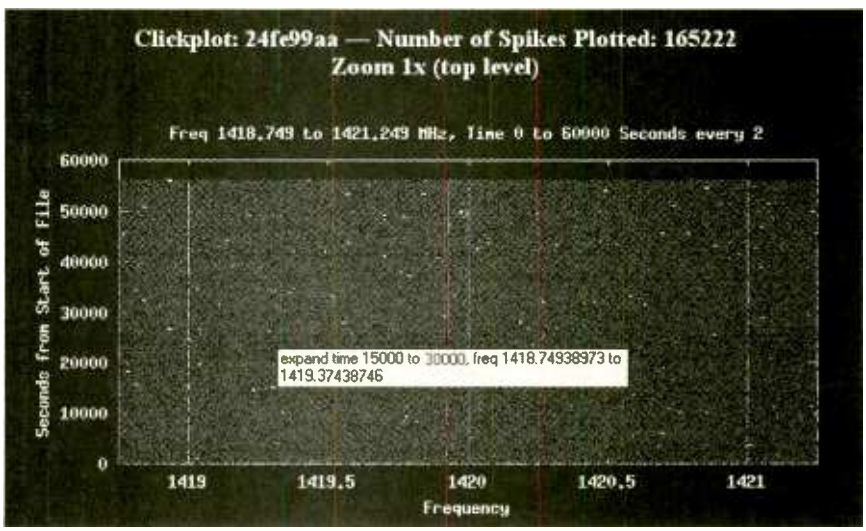

Each day, thousands of computers partake in one of the world's largest distributed computing projects—SETI@home. The above photo was retrieved from SETI@home's Web site, http://setiathome.ssl.Berkeley.edu, *and it shows a graph analysis of the night sky, which has been analyzed with the help of volunteers' home computers. Free software can be downloaded from this site in order to lend your machine's CPU power to a most promising cause—finding evidence of extraterrestrial intelligence within the cosmos via radio contact.*

SETI SOFTWARE AND OTHER OPTIONS

SETI@home, at *http://setiathome.ssl.berkeley.edu*, has been attracting volunteers since May 1999. Already, a whopping three million have opened their computers through the Internet to the Space Sciences Laboratory of the University of California at Berkeley, helping the lab analyze radio signals from outer space for signs of intelligence.

It's all very, well, far out. Yet, it's very logical as well. By breaking down a huge computational project into smaller tasks and distributing them to many different computers, the work gets done faster. The process itself is painless. You download a small program that typically acts as a screensaver—Windows, Mac, and Linux users can all play.

The screensaver kicks in when you're not using your computer, so it doesn't interfere with your work. Every few days it gathers together data and sends it back to the mother ship, that is, the Berkeley lab. You don't need a high-speed Internet connection—a 28.8 modem works fine—and for disk space all you need is ten spare megabytes.

To promote security, the SETI@home software is designed to download and upload data only from the Berkeley lab. For similar reasons, the Berkeley lab hasn't publicly released the source code of the software.

SETI@home has received a lot of attention, but it's not the only option available in digital altruism. If you're a more down-to-earth type, you can participate in cancer research through the United Devices project, at *www.ud.com*, which was developed in conjunction with Britain's Oxford University and is supported with funding from computer giant Intel. Nearly half a mil-

www.americanradiohistory.com

lion people so far have joined this effort. The process is similar to that with SETI@home, but instead of analyzing radio signals from space, your computer analyzes molecules for their suitability in the formulation for anticancer drugs.

Helping others is great, but it you're more attuned to doing well rather than to doing good, a number of companies have begun to offer distributed computing services that can harness your organization's existing computers to solve complex business or research problems. Entropia, at *www.entropia.com,* has the bottom line firmly in mind with its offerings, which it suggests for use in areas such as financial analysis, Web testing, bioinformatics, or computational chemistry.

The company doesn't ignore social responsibility, however, allowing individuals to download its software for what it describes as "cause computing." You can currently sign up for two projects. The first, in conjunction with the Scripps Research Institute of La Jolla, California, involves the study of drug resistance and drug design in the fight against AIDS. The second, in conjunction with the University of Rochester's Simon School of Business, involves the study of world market volatility.

All this is very impressive sounding, and some of the rhetoric inevitably gets more than a bit grandiose. United Devices enthuses: "We all get to feel terrific because we are changing the world." Not to be outdone, Entropia claims to "quite literally build a computer the size of planet Earth."

Still, the numbers, if not yet the results, really are impressive. SETI@home's three million volunteers collectively have created a relatively inexpensive distributed supercomputer with greater raw processing power than the fastest discrete supercomputer. SETI@home contends its network of computers is rated at 15 teraflops and has cost just $500,000, while IBM's ASCI White supercomputer is rated at 12 teraflops and costs $110 million.

DON'T GET BURNT!

Distributed computing does have its limitations, however. Unlike discrete supercomputers such as IBM's, it's not effective with problems such as weather forecasting in which individual calculations affect each other. With distributed computing, as currently developed, the calculations must be independent of one another.

Products such as American Power Conversion's PowerManager offer protection above and beyond the standard circuit-breaker equipped power strips. This particular unit features a site-wiring-fault indicator, noise filtering, and fused-based surge protection from disasters, such as nearby lightning strikes.

Although it has great potential, distributed computing is still too new to have scored any significant achievements. SETI@home, for instance, has not detected any radio signals that indicate the presence of extraterrestrial intelligence. Yet the search, and the development of ever more sophisticated computer technology, continues.

While computers are gaining power and sophistication, most people don't think twice about the electric current flowing into a PC until something disturbs that flow. Electricity is your computer's gasoline, the fuel that moves the moving parts; and it can be equally explosive. In the event that lightning threatens, electrical disturbances can cause the bits to bite the dust, bigtime, and negate any and all progress made from computer connectivity and distributed computing.

A few years ago, a nearby lightning strike zapped my computer during a crucial stage of an important work project. It toasted the hard drive controller, a backup floppy disk in the floppy drive, and the modem. I was lucky, however. The lightning didn't total the PC, sparing the hard disk and my work. I did, however, spend a hair-pulling day waiting for the computer repair shop to inform me of this.

POINT AND CLICK

American Power Conversion
www.apcc.com

Entropia
www.entropia.com

Seti@home
http://setiathome.ssl.berkeley.edu

Tripp Lite
www.tripplite.com

United Devices
www.uniteddevices.com

KEEPING POWER UNDER CONTROL

One misconception about electricity is that lightning never strikes twice. In actuality, it could zap my home office equipment all over again in the same way or worse. If you're not prepared, your PC could be an accident waiting to happen, too. Another misconception is that a surge suppressor will protect your equipment against lightning. Truth is that lightning can surge past even the best surge suppressors, also called surge protectors, that are typically used in home and small business settings. The same is true with uninterruptible power supplies, also called backup power supplies, which typically incorporate surge suppressors.

A surge suppressor, however, is helpful in protecting delicate computer electronics from smaller but much more common surges that inadvertently emanate from other office machines or household appliance and from surges caused when the power comes back on after an outage.

An uninterruptible power supply (UPS) is helpful at the onset of a power outage as well. If the lights go out, a UPS will provide juice to your PC long enough for you to save any unsaved work and power down properly, preventing files from getting corrupted. In areas of rolling blackouts or where the local electric company for other reasons can't keep the electrons streaming dependably, a UPS is a must have.

Don't wait until you're sadder but wiser. If you haven't already done so, invest in either of these pieces of equipment, which can be thought of as the equivalent of air bags in a car. They may not save you in the worst crash, but you're a lot safer with them. You should plug modem and network lines into the unit as well or buy a separate phone-line surge suppressor. Don't scrimp by buying a cheapo power strip instead of a full-fledged surge suppressor or UPS. Just because you can plug multiple devices into it doesn't mean

(Continued on page 38)

www.americanradiohistory.com

BROOKE A. BERLIN

HAARP: PROGRESS OR MIND-CONTROL?

The U.S. military has been experimenting with ways to understand and control the upper atmosphere for about 50 years. Beginning with Project Argus in 1958, when the U.S. Navy exploded three fission and two hydrogen bombs in order to assess the impact of high-altitude nuclear explosions on radio transmission and radar operations due to an electromagnetic pulse (EMP), it continues today with HAARP—an acronym for *H*igh-frequency *A*ctive *A*uroral *R*esearch *P*rogram—which was jointly initiated by the U.S. Air Force and U.S. Navy in 1993.

Since the introduction of HAARP, there have been many theories as to its intended use and misuse. The military boasts improvements in communications, defense, and environmental conservation. Others have speculated that there are more negative consequences from this program than the military wants the public to know about. Such theorists have come out with the possibility of mind-control and environmental manipulation and devastation.

The Logistics

Our atmosphere is divided into three major sections—the troposphere (sea level–16 km), the stratosphere (16–48 km), and the ionosphere (48–50,000 km). HAARP researchers are studying the properties and behavior of the ionosphere, specifically at an altitude of 100–350 km, through the use of a research facility in Alaska. The 23-acre facility located 200 miles east of Anchorage consists of two main parts—an ionospheric research instrument (IRI) and a scientific suite of other instruments. The IRI is a high-power transmitter and antenna capable of producing up to 3.6 million watts used to excite a confined area a few hundred meters thick by a few tens of kilometers in diameter. Other instruments are used to observe the resulting physical processes taking place in the excited area.

The intensity of the signal being transmitted is less than three microwatts per cm^2—tens of thousands of times less than the sun's natural electromagnetic radiation and hundreds of times less than the sun's natural ultraviolet energy. While the concentration of radiation is minor compared to natural levels, observations can still be made about the sun's stimulation and, therefore, provide information about the dynamics of plasmas and the process of solar-terrestrial interactions.

Sitting On The Fence

Many of the applications that HAARP—the most versatile and largest radio-frequency-radiation transmitter in the world—can be used for have debatable ethics and morality. Many of its functions are positive in nature, but can be taken to a negative extreme. The emphasis of the project is to understand, enhance, and ultimately achieve control of communications—be they inter-party or third-party. It is an integral part of space research and military development.

The ability to manipulate radio waves can be achieved in different ways, such as electron acceleration of infrared (IR) and other optical emissions, generating geometric field-aligned ionization, and using oblique heating to broaden ionospheric enhancement technology. The U.S. Navy can generate extremely-low frequency (ELF) waves, which will allow for military communication with submerged submarines.

These techniques can be applied to a system of surveillance for both defense and civilian purposes, in which the U.S. Air Force can then deal more effectively with such things as terrorist groups and crowd control. However, this would be achieved by producing mild to severe physiological disruption or perceptual distortion or disorientation. U.S. Air Force documents revealed that a system for interrupting and exploiting human mental processes through pulsed radio-frequency radiation over large geographical areas is feasible and desirable

By creating and directing balls of energy at lightning speeds, it could be possible to manipulate the minds of people by altering the electrical energy already present in their brains. Imagine, if you could, the ability of a police force to soothe a rioting mob with a pulse of electromagnetic force or perhaps the ability to render the same crowd docile and subservient. If today's society can be monitored and controlled by means of influencing public behavior, the threat of a highly-dominated technosociety is a real prospect.

Weather Warfare

HAARP is most likely to be marketed to the public as a space shield against incoming weapons and a device for repairing the ozone layer. Through molecular modifications in the atmosphere and by constructing particle lenses or focusing devices, claims have been made that it will be possible to alter wind pat-

www.americanradiohistory.com

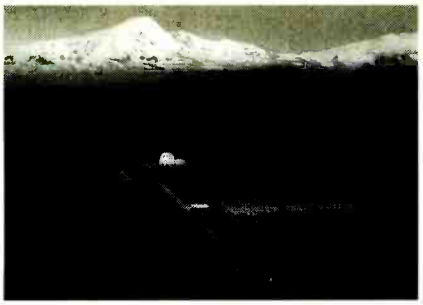

This is an aerial view of the HAARP antennae located in Gakona, Alaska. Down the road from the antenna farm is where the main control facility is located. The site offers stunning views of Mt. Sanford and Mt. Drum within the Wrangell Mountain Chain.

terns and solar absorption patterns. Simply stated, it will be possible to control the weather. This means that while natural disasters may be able to be tracked and contained, they will also be able to be used in environmental warfare.

The ability of the HAARP/Space lab/rocket combination to deliver nuclear-bomb-like energy to anywhere on earth via laser and particle beams will bring geophysical warfare to a magnitude comparable with biochemical warfare. The key to geophysical warfare is the identification of environmental instabilities to which the addition of a small amount of energy would release vastly greater amounts of energy.

This photo of Wardenclyffe was obtained from the Wardenclyffe Project Homepage at www.teslascience.org. *This organization hopes to one day acquire the property in Shoreham, New York for the purpose of establishing a museum dedicated to Tesla's work. The impressive 180-foot tower no longer stands at the site, but the building seen in the photo has been preserved.*

THE TESLA CONNECTION

Perhaps no scientist's career is shrouded with more conspiracy than that of Nikola Tesla. His lab on the grounds of Wardenclyffe on Long Island, still to this day is the subject of controversy. A classic tale told around the test bench is Tesla's tie to the explosive incident that occurred in Tugunska, Siberia in the early twentieth century. Causes for the widespread damage have been linked to a meteor, an atomic bomb, and a death ray. The death ray was a common legend that had been buzzing throughout the pre-war science community.

Nikola Tesla announced his plans for his own death ray at a symposium of New York based electrical engineers. Truth soon melds with fantasy as the following details are discussed. Word was that J.P. Morgan was interested in investing a bit of his empire into Tesla's Wardenclyffe laboratory. Tesla claimed that his 180-foot tower could transmit energy waves to any point on the globe. He explained how this energy could be used for communications, power grids, or ultimately—destruction. A feisty Edison, as rumors have it, wanted the cash of Tesla's investors for his own energy production plans, and so he set forth in luring the likes of Morgan away from the "mad" Tesla.

Supposedly, in an attempt to win over his prospective investors, Nikola Tesla organized and executed a one-time test of his death ray. The result is in the miles of destruction in a secluded forest in Tugunska, according to some theorists. As history shows, Tesla soon fell out of favor with Morgan, and the lab at Wardenclyffe was sold for scrap. The plot thickens, when Tesla dies and "men from the government" allegedly filter through the scientist's notes and steal away with his writings related to the death ray (among numerous other writings). Nearly a century later, people still are inquiring about the mysterious work at Wardenclyffe and its ties to weapons of mass destruction. The lab at Wardenclyffe still stands today. It is in the town of Shoreham on Long Island, New York. The tower is gone, but the brick building that housed the lab remains. According to the Environmental Protection Agency, previous tenants had rendered the sit hazardous due to the dumping of silver nitrate from photo processing. The site is strictly off limits to the public and a guard is posted to deter home-grown investigators. And so, the mystery continues...

Using power-beaming transmitters of this type would enable individuals to trigger earthquakes and volcanic eruptions. Not only would there be negative effects on human health and stability, but there would also be a profound influence on the migration patterns of fish and wild animals that rely on an undisturbed energy field to find their routes. Intensive and increasingly destructive programs like this one could do more harm than good to the long-term environment.

Additional military benefits would be seen if large regions of the atmosphere could be lifted unexpectedly to higher altitudes. Missiles would then encounter unplanned drag forces and be ineffective. History repeats itself, though, and those looking at the detriments possibly caused by heating areas in the ionosphere—whereby electromagnetic waves bounce back to earth penetrating everything, both living and dead—turn towards such events as the 1962 Project Starfish. There, testing disrupted the lower Van Allen Belt and created a new, extended radiation belt. In 1990, there was a government document that indicated that the radio-frequency power zaps would drive the ionosphere into unnatural activity

Conspiracy Theories

Many people feel that the suspicious motives behind HAARP are validated by the project's association to secret patents. The technology provided—by both the actively participating organizations and the links to non-active organizations—can be traced back by different paths to some very questionable people.

The prime contractor for HAARP is APTI—*A*rco *P*ower *T*echnologies, *I*ncorporated—whose parent company is ARCO—*A*tlantic *R*ichfield *C*ompany—one of the largest oil companies in the world. APTI owns the Eastlund Patents, and much of Bernard J. Eastlund's work was based on the information provided by Nikola Tesla in the early 1900s. In 1994, ARCO sold APTI, patents and all, to E-Systems, one of the biggest intelligence contractors working with the CIA, defense intelligence organizations,

(Continued on page 52)

www.americanradiohistory.com

AM/Short-Wave Converter

BILL DONOFRIO

Discover The Thrills Of Short-Wave Radio By Building A Coil-Tuned Converter

If you ever wanted to listen to, or were just curious about, what's on the short-wave bands, this is just the circuit you have been looking for. For a few bucks and a couple of hours of work, you can build your own *AM/Short-Wave Converter* that has good performance and won't empty your wallet.

About eight years ago I was sent to Japan on an assignment. After listening to Japanese and broken English for ten hours a day, six days a week, for two weeks, it was a relief to turn on my shortwave converter and listen to someone speaking unbroken English. If you think these were long days, the average Japanese work-er (salary-men) works twelve hours a day, five days a week, and eight hours on Saturday.

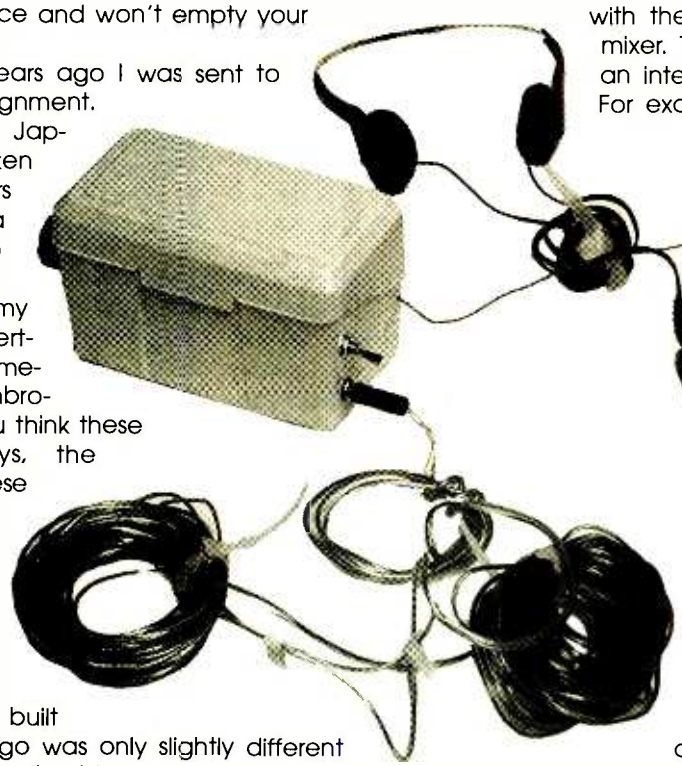

The converter I built so many years ago was only slightly different from the one described here. Its performance was almost as good as some of the cheap shortwave receivers on the market. When I decided to build the circuit, I wanted to build something that was simple, but had good performance. By building a converter, I was able to design a simple circuit that could convert short-wave signals to ones that could be received by any AM radio. While this is not a novel idea, it eliminated the expense of designing IF, detector, and amplifier circuits. This idea was put to good use during the 70s when converters where used to convert AM car radios to FM receivers.

Circuit Description. The converter circuit consists of a Hartley oscillator and a mixer. In this circuit, the frequency of the incoming signal is combined with the signal from the oscillator in the mixer. The signals are heterodyned, and an intermediate frequency is produced. For example, if the incoming signal was 6600 kHz and the oscillator was set at 5000 kHz, the intermediate frequencies would be 1600 and 11600. The lower frequency intermediate signal would now be in the frequency range for any AM radio to receive. Using this method, any high-frequency signal can convert to a lower frequency. If the AM radio was tuned to 1600 kHz, it would pick up the 1600 kHz intermediate frequency and reject the other.

The oscillator was designed around a FET transistor, Q1. A field-effect transistor was used instead of a bipolar, because the high impedance permits the design of a high-frequency stable oscillator. A Hartley oscillator was used in this converter and can be recognized by its tapped coil. The resonating capacitor (C1) was placed in parallel with the entire coil winding. The frequency of oscillation is approximately 3.5–9 MHz and is determined by the tuning coil (L1) and the 150-pF capacitor (C1).

The mixer is essentially a common emitter amplifier with a gain of three. Resistors R4 and R5 provide volt-

www.americanradiohistory.com

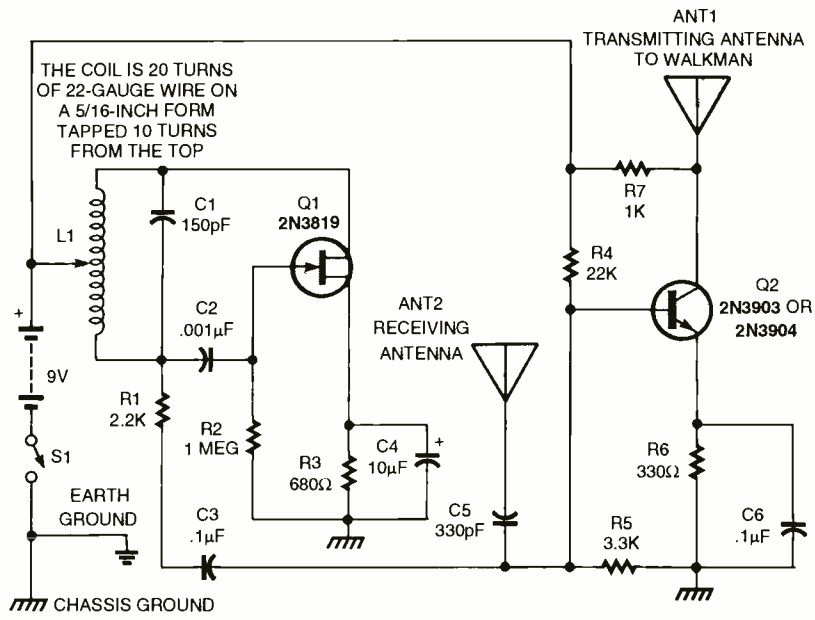

Fig. 1. This is the schematic for the AM/Short-Wave Converter circuit. As the author explains, the main components of the circuit are a Hartley oscillator and a mixer. Capacitor C1 acts as the resonating capacitor within the Hartley oscillator, which is also composed of Q1 and L1.

age-divider bias. Oscillator and input signals are fed in to the base of the transistor (Q1), where they are heterodyned. The intermediate frequencies are fed to the transmitting antenna and received by the AM radio.

Construction. In order to save money I constructed the circuit on a piece of perfboard, inserting 22-gauge wire in the holes to form wire paths for the components. Then, I soldered the components to the wires. In many ways this form of construction resembles a printed circuit board with surface-mount components.

The coil was wound around a 2-inch long by 5/16-inch in diameter core with an adjustable ferrite slug. Around the coil form were wound 20 turns of 22-gauge enamel wire tapped 10 turns from the top. To remove the enamel from the wire, sandpaper was used. While you may not be able to obtain a coil form with these exact dimensions, oscillator performance won't be severely affected. Coils up to 3/8-inch in diameter were used with 30-gauge wire. Good sources for these coils are grab bags, old TVs, radios, and even computer moni-

PARTS LIST FOR THE AM/SHORT-WAVE CONVERTER

SEMICONDUCTORS

Q1—2N3819 field-effect transistor, N channel
Q2—2N3903 or 2N3904 NPN transistor. Using a 2N3904 will only slightly degrade performance.

RESISTORS

(All resistors are 5%, ¼-watt units unless otherwise noted.)
R1—2.2K-ohm
R2—1-megohm
R3—680-ohm
R4—22K
R5—3.3K
R6—330-ohm
R7—1K

CAPACITORS

C1—150-pF, ceramic disc
C2—.001-µF, ceramic disc
C3 and C6—.1-µF, ceramic disc
C4—10-µF, 10-volt electrolytic capacitor
C5—330-pF, ceramic disc

ADDITIONAL PARTS AND MATERIALS

S1—SPST switch
Perf board, wire, 9-volt battery, AM radio

The inductor-coil was wound around a 2-inch long by 5/16-inch in diameter core with an adjustable ferrite slug. Around the coil were wound 20 turns of 22-gauge enamel wire tapped 10 turns from the top. See text.

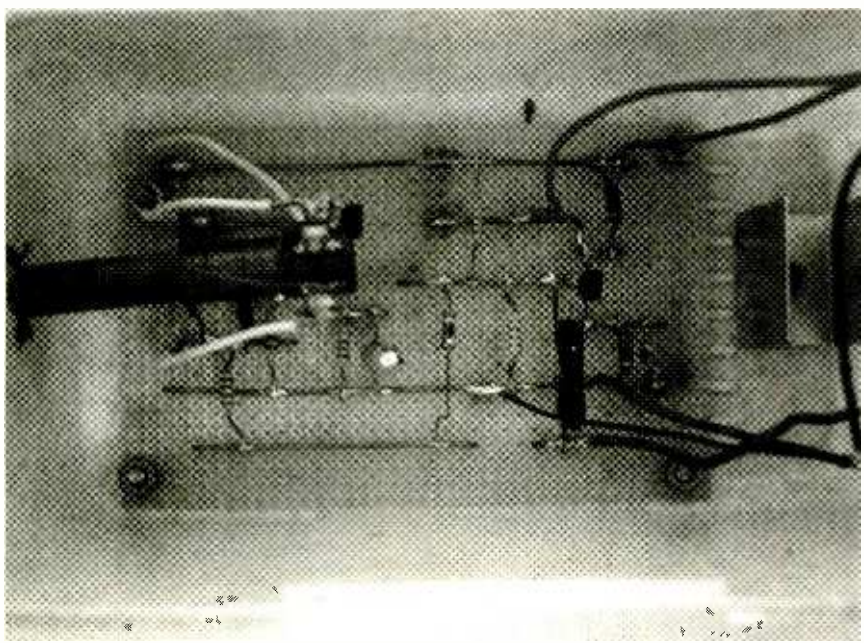

The AM/Short-Wave Converter was constructed inside an index card-filing box. On the left-hand side is the tuner that is just a coil with an adjustable ferrite slug.

These coils were actually used in the above circuit. As you can see, various coils can be used.

www.americanradiohistory.com

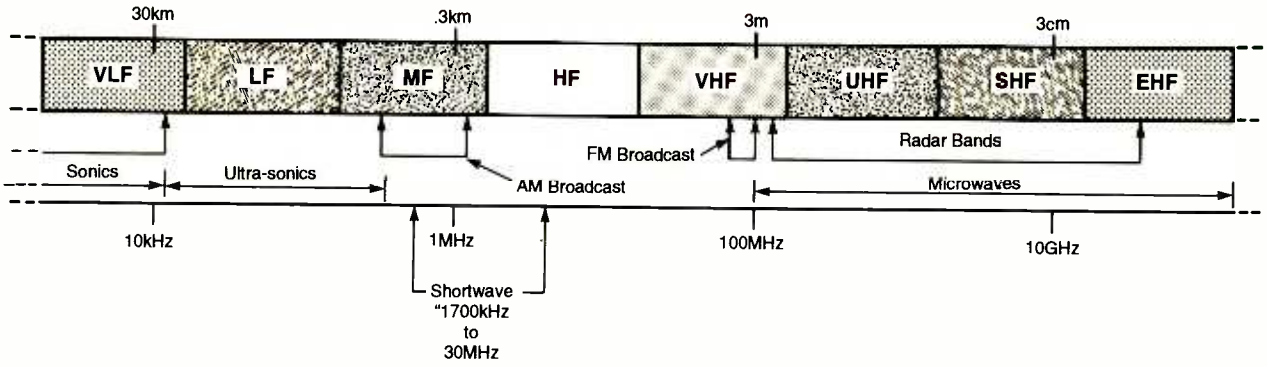

Fig. 2. The graph above shows the radio spectrum. Short-wave broadcasts are heard at a nominal 1700 kHz to 30 MHz. The band generally exists from the upper portion of the AM band up to the mid-HF band, taking into consideration the numerous conditions that affect the signals at this wavelength (e.g. time of day and solar activity).

tors. The transmitting antenna was made up of approximately six inches of 22-gauge wire. The circuit was then mounted in an inexpensive plastic card file box, which can be obtained for about $1.50. Though a subminiature phone jack was used in the prototype circuit to connect the receiving antenna and the ground, it's optional. It was only used to make these items easier to transport when the converter was moved.

Operation. To operate the converter, connect the Earth ground to a cold-water pipe, radiator, or other suitable ground. String out about 20-30 feet of wire across the floor to form an antenna. Any type of wire can be used for an antenna. I used 20 feet of speaker wire. A good antenna and ground are required to obtain maximum performance. Place the transmitting antenna next to the AM radio you wish to use and set the tuner to a place where no stations are broadcasting. This can be any place on the standard broadcast band. Usually, there are no stations at either end of the band. Adjust the tuning coil until a station comes in. That's all there is to it.

Conclusion. You can receive stations from approximately 120- to the 31-meter band. Reception is best at night. Usually, the later into the night, the better the reception.

Listening to short-wave radio broadcasts (*SWLing*, if you're savvy) is a hobby enjoyed by millions around the globe. Tuning in to a distant station, or *DXing*, is one of the more popular pastimes of listeners. The actual task of tuning in the stations from far-off lands on a portable radio takes practice and patience. Broadcasts are heard anywhere between 1700 kHz and 30 MHz. Reception of the signals relies heavily on environmental factors, such as temperature, amount of sunspot activity, and any sources of *E*lectro-*M*agnetic *I*nterference (*EMI*). Heralded as a source of alternative media, short-wave radio offers music and discussion from all across the spectrum. Many stations program English broadcasts that are specifically targeted to North American audiences. A good source of radio station information is (ironically) the Internet. Check out Mare's Short-Wave Frequency List Of Broadcasts (*http://Detroit.freenet.org/mare/SWBCSkeds.html*) for a comprehensive list organized into world regions and the various stations that offer English broadcasts. Another site to consider when starting out is DXing.com (*www.dxing.com*). Here, visitors will find all sorts of useful information pertaining to DXing and scanners.

Utility-stations, or *utes*, are transmitters operating in a near-jamming manner. These utes can range from government users, private users such as contractors, or just your typical ignorant transmitter operator who has no tact. Devoted SWLs consider the practice of overbearing a viable station rude and in some extreme cases, unlawful. Yet, some listeners try to intentionally monitor the utes instead of the "official" short-wave stations. You never know what or who you might here between 1700 kHz and 30 MHz.

One of the challenges of the DXing hobby is receiving *QSLs*. QSLs get their name from the golden days of radiotelegraph operators, when QSL was code for "I confirm." Now, QSLs are tokens of acknowledgment from short-wave stations. Listeners, who are fortunate enough to tune in a distant station, can often send in a report to the station and receive a traditional postcard or certificate QSL in return. Most reports state the time the station was heard in UTC, the quality of the signal, some details on what they heard in order to verify they were actually listening, and comments or criticism. Die-hard radio operators still use a system known as SINPO. This stands for *S*trength of signal, *I*nterference, atmospheric *N*oise, and *O*verall signal quality. Each factor is rated on a scale from one to five—a SINPO of 55555 being the highest possible rating. The AM/Short-Wave Converter should provide a good introduction to the band. P

9 out of 10 mice prefer the Consumer Information Catalog online. Catch it at www.pueblo.gsa.gov.

U.S. General Services Administration

www.americanradiohistory.com

PUMPKIN SAFETY LIGHT

THOMAS A. BARKER

Light your Halloween Jack O' Lantern with this flickering LED circuit.

Every Halloween, my children and I would carve a variety of designs and figures on to our pumpkins. At night, we would insert candles and watch the light flicker in the cool night air. When the children were young, I would light the candles for safety and on Halloween night make sure that the pumpkins were out of the trick-or-treaters way, so that their costumes would not get too close to the candle flames. As always the children would want their pumpkins to be lit several nights, and after the second night of having a lit candle, the pumpkin would get soft and take on an overripe smell. As an engineer I knew there must be an electronic alternative to a lit candle, and there is. I call it the *Pumpkin Safety Light*.

Concept And Design. The original design was nothing more than some small light bulbs and batteries, but the batteries would only last a few hours. Then I experimented with LEDs. The batteries lasted longer, but there still wasn't enough light. Along came the super bright T-1 ¾ size LED (I used the ones by QT Optoelectronics, which have a minimum output of 1600m candles), and now the design was beginning to show some real possibilities. The design progressed with the addition of a 74HC00 to function as an oscillator for flashing and drivers to the new low-current, high-intensity LEDs. Now, this design would last for several nights on a single set of batteries. It was a very simple design that worked. I knew I could go one step further by incorporating battery management within the circuit. The addition of Maxim's step-up DC-DC converter, MAX751CPA, enables the circuit to run for over 30 hours of continuous use out of a set of batteries; and the LEDs maintain a constant brightness. By the time the unit finally shuts down, the batteries have drained down to less than half a volt each. This is truly getting as much power out of the batteries as possible.

Circuit Description. As can be seen in Fig. 1, the Maxim MAX751CPA (IC2) takes the output of the three "AA" batteries, B1, B2, and B3, and converts their com-

www.americanradiohistory.com

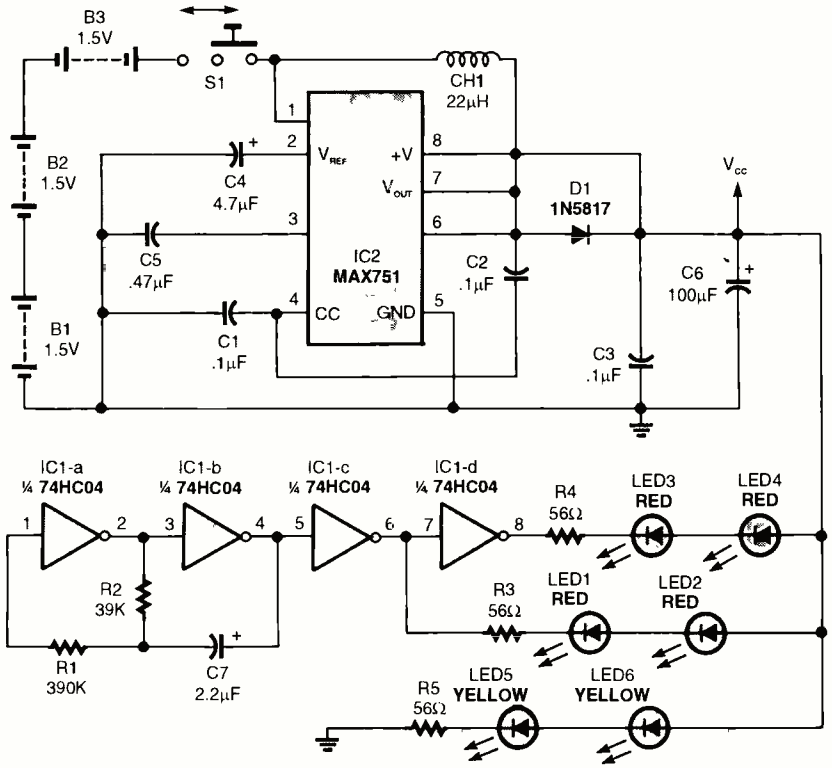

Fig. 1. This is the schematic for the Pumpkin Safety Light. The MAX751 receives the input of the three batteries and converts their combined voltage to 5 volts. Sections A and B of the 74HC04 Hex-inverter and R1, R2, and C7 form an oscillator that controls the frequency of the blinking LEDs.

PARTS LIST FOR THE PUMPKIN SAFETY LIGHT

SEMICONDUCTORS

IC1—74HC04 CMOS Hex inverter
IC2—MAX751CPA step-up DC-DC converter
D1—1N5817 1A-20V, Schottky diode
LED1–LED4—Red super-bright, low-current LED
LED5, LED6—Yellow super-bright, low-current LED

RESISTORS

(All resistors are ¼-watt, 5% units unless otherwise noted.)
R1—390K ohms
R2—39K ohms
R3–R5—56 ohms

CAPACITORS

C1–C3—0.1µF, 50-WVDC, ceramic-disc
C4—4.7µF, 16-WVDC, electrolytic
C5—0.47µF, 50-WVDC, ceramic-disc
C6—100µF, 16-WVDC, electrolytic
C7—2.2µF, 16-WVDC, electrolytic

INDUCTORS

CH1—22µH

ADDITIONAL PARTS AND MATERIALS

S1—SPDT switch, PCB-mountable
Battery clips, keystone #92, circuit board, plastic electrical tape box, three "AA" batteries, 8-pin IC socket, 14-pin IC socket

bined voltage to 5 volts. According to the manufacturer's specifications, the MAX751CPA will work down to an input voltage of 1.2 volts. There are three "AA" batteries in series in this circuit, so this converts to 0.4 volts for each battery. LED 5 and LED 6 are both directly driven through R5 to give a steady yellow light. Sections A and B of the 74HC04 (IC1) along with R1, R2, and C7, form an oscillator to provide the blinking of LED 1 and LED 2 alternately with LED 3 and LED 4. By changing the value of R1 and C7 the frequency of the blinking red LEDs may be changed. Driving the LEDs in pairs requires that the current-limiting resistors be only 56 ohms, so as to minimize the amount of wasted power.

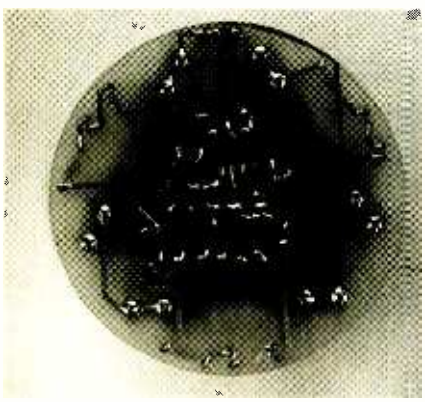

Here is the solder side of the circuit. The circuit could also be breadboarded or direct-wired. The author's prototype was etched with the aid of press-on film.

Construction. This circuit board was laid out in such a manner so that a 3½ × ⅞-inch plastic box that electric tape comes in may be used as a water-resistant container that also diffuses the light. The circuit is simple enough that it may be constructed on a perfboard using point-to-point wiring techniques, or you could use the solder-trace diagram in Fig. 2 to create your own printed circuit board. Be sure to observe the polarities of the LEDs, the electrolytic capacitors, and diode D1. Following the parts placement shown on the diagram in Fig. 3 for all of the other parts, carefully assemble the circuit. There is no need for calibration or adjustment upon completion. Simply place the circuit board into the plastic box, turn the switch on, drop into your pumpkin or any other container, and enjoy your simulated flickering candle. If a tape box is not available, a clear plastic food storage container will work.

Troubleshooting. Even though this is an easy project to construct, there are a few problems that may

Here is the component side of the circuit. Three batteries form a triangle surrounding the main components. The DC-DC converter is located below the switch at the top of the circuit.

www.americanradiohistory.com

COMPONENT SUPPLIERS

The following components were obtained from:

Mouser Electronics
1-800-346-6873
www.mouser.com

D1—1N5817, PART NO. 625-1N5817
LED1–LED4—Red LED, part no. 512-MV8114
LED6 and LED7—Yellow LED, part no. 512-MV8305
CH1—Inductor, part no. 580-22R223
S1—SPDT switch, 10SP001
B1-B3—Battery clips, part no. 534-092 (six required)

The Maxim Step-Up DC-DC converter MAX751CPA may be obtained from:

Digi-Key Corp.
800-344-4539
www.digikey.com

Arrow Electronics
516-391-1300

Hamilton Hallmark
214-343-5000

The CMOS Hex inverter, resistors, and the capacitors may be obtained from Mouser and most other electronic supply catalogs.

A complete kit of all parts including a PC board, but not the box, may be obtained by sending a check made out to Tomtronics, for $25.00 plus $2.00 shipping and handling to: Pumpkin Safety Light, Tomtronics, 63 Jaenicke Lane, Hamden, CT 06517. Please allow 4 to 6 weeks for delivery. If you have any questions or problems regarding the construction of this project, you can correspond via e-mail at *tom@mirage.physics. yale.edu.*

occur. If the unit does not work at all, check for the presence of 5 volts between pins 7 and 14 of IC1. If the voltage is not there, check the components associated with IC2—especially D1, C4, and C6—for proper polarity. If the 5 volts is present, check the yellow LEDs for proper polarity since these are connected directly to the 5-volt line and to the negative side of the batteries through R5. If both sets of red LEDs are out, check the polarities of D2–D5 and C7. If an oscilloscope is available, check that there is a square wave on pin 6, and an inversion of this signal on

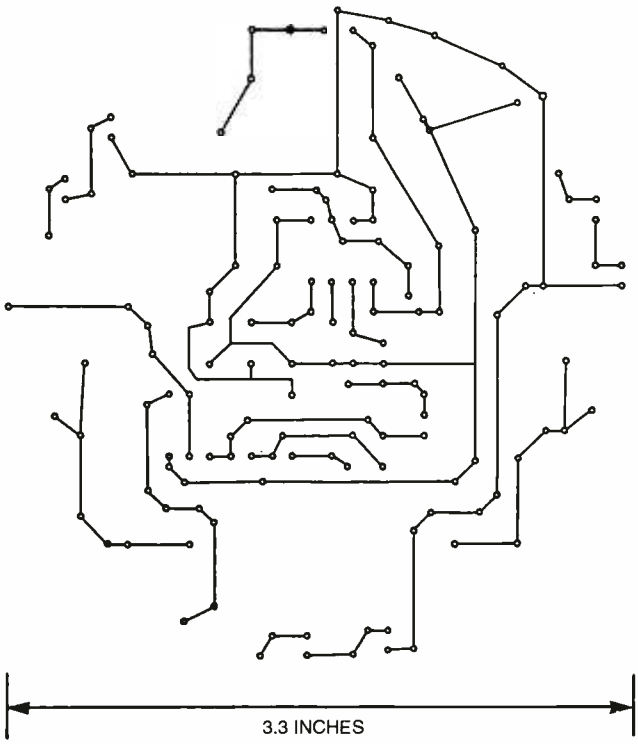

Fig. 2. This solder-trace diagram was taken off the prototype. The author used a press-on application to create his prototype. Readers could opt for a direct-wire approach or, perhaps contact the author in order to procure an entire kit.

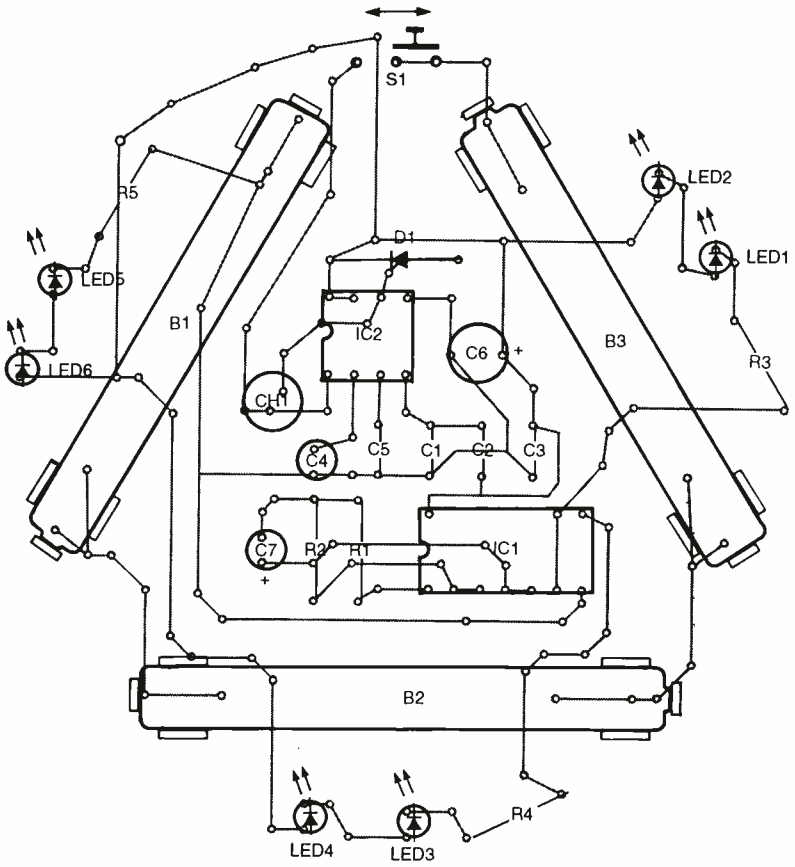

Fig. 3. Here is the parts placement diagram. The author's prototype fit inside a plastic case that once held electrical tape. As seen by the limited amount of parts, this project should take little more than a night to complete. Carefully construct the unit, using the schematic and parts placement diagram as references.

www.americanradiohistory.com

pin 8. The square wave has a frequency of about 1 Hz and, therefore, a voltmeter should also give an indication of this signal's presence.

Conclusion. This project is an excellent example of how integrated circuits are put to practical use. In this case, IC1 acts as the heart of an RC-controlled oscillator circuit. A daring experimenter could also incorporate the classic 555-timer chip in this role, or perhaps experiment with varying values of R1 and C7 as discussed in the "Circuit Description" section. Here's a suggestion: Try replacing R1 with a variable resistor and C7 with a trimmer capacitor. Imagination and practical safety are the only limits that govern what an eager hobbyist can create from the Pumpkin Safety Light. P

Don't lose sight of Glaucoma.

NATIONAL EYE HEALTH EDUCATION PROGRAM

POPTRONIX®

Online Edition

We're on the web

FREE

We are starting up, but you can watch us grow!

Projects for beginners to experts!
New Product information!
Bookstore—discover what's new!

http://www.poptronix.com

WE'RE WITH YOU EVERY DAY 24 HOURS A DAY! DROP IN! WE'D LOVE TO HAVE YOU VISIT!

Poptronics REPRINT BOOKSTORE

☐ **229** Popular Electronics (1999 back issues) **$5.00**
Write in Issues desired _____
☐ **228** Popular Electronics (1998 back issues) **$5.00**
Write in Issues desired _____
☐ **227** Popular Electronics (1997 back issues) **$5.00**
Write in Issues desired _____
☐ **226** Popular Electronics (1996 back issues) **$5.00**
Write in Issues desired _____
☐ **225** Popular Electronics (1995 back issues) **$5.00**
Write in Issues desired _____
☐ **EH96** Experimenters Handbook (1996) **$5.00**
☐ **EH95S** Experimenters Handbook Summer Edition (1995) **$5.00**
☐ **EH94S** Experimenters Handbook Summer Edition (1994) **$5.00**
☐ **EH94W** Experimenters Handbook Winter Edition (1994) **$5.00**
☐ **EH94** Experimenters Handbook (1994) **$5.00**
☐ **EH93** Experimenters Handbook (1993) **$5.00**
☐ **HH95S** Hobbyists Handbook Spring Edition (1995) **$5.00**
☐ **HH95F** Hobbyists Handbook Fall Edition (1995) **$5.00**
☐ **HH94S** Hobbyists Handbook Spring Edition (1994) **$5.00**
☐ **HH94F** Hobbyists Handbook Fall Edition (1994) **$5.00**
☐ **HH93** Hobbyists Handbook (1993) **$5.00**
☐ **HISTORY** Crystal Radio History, Fundamentals & Design **$10.95**
☐ **XTAL** Crystal Set Handbook **$10.95**
☐ **XTALPRO** Crystal Set Projects **$14.95**
☐ **XTALBLD** Crystal Set Building **$15.95**
☐ **POP96** POPtronix Hobbyist Handbook (1996) **$5.00**
☐ **POP97** POPtronix Exper Handbook (1997) **$5.00**
☐ **Radiocraft** 1993 Projects for Hobbyists **$5.00**
☐ **219** Electronics Now (1999 back issues) **$5.00**
Write in Issues desired _____
☐ **218** Electronics Now (1998 back issues) **$5.00**
Write in Issues desired _____
☐ **217** Electronics Now (1997 back issues) **$5.00**
Write in Issues desired _____
☐ **216** Electronics Now (1996 back issues) **$5.00**
Write in Issues desired _____
☐ **215** Electronics Now (1995 back issues) **$5.00**
Write in Issues desired _____

REPRINTS REPRINTS

☐ **174** Electronics Cartoons (The Best of) **$1.99**
☐ **173** From Not-Working to Networking Troubleshooting Local-Area Networks **$2.99**
☐ **172** 33 Bench-Tested Circuits **$1.99**
☐ **171** 36 Time Tested Circuits **$1.99**
☐ **170** High-Voltage Project for Fun and Science Book 1 **$2.99**
☐ **170A** High-Voltage Projects for Fun and Science Book 2 **$2.99**
☐ **169** Think Tank (133 Circuits) **$1.99**
☐ **169A** Think Tank Vol. 2 **$1.99**
☐ **168** Fact Cards (#34-66) **$1.99**
☐ **168C** Fact Cards (#67-99) **$1.99**
☐ **168D** Fact Cards (#100-132) **$1.99**
☐ **167** Designing With IC's **$2.99**
☐ **166** Collected Works of Mohammed Ullyses Fips (62 pages, April Fools Collection) **$6.99**
☐ **165** How to Repair CD Disc Players **$2.99**
☐ **164** Modern Electrics (April 1908) **$1.99**
☐ **160** New Ideas - 42 Circuits **$1.99**
☐ **159** Low Frequency Receiving Techniques Building and Using VLF Antennas **$2.99**
☐ **158** Electro Importing Co. Catalog (Circa 1918) **$2.99**
☐ **157** All About Kits **$1.99**
☐ **156** How To Make PC Boards **$1.99**
☐ **154** How To Repair VCR's **$1.99**

To order any of the items indicated above, check off the ones you want. Complete the order form below, include your payment, check or money order (DO NOT SEND CASH), payable to and mail to Claggk Inc., Reprint Department, P.O. Box 12162, Hauppauge, NY 11788.

Please allow 4-6 weeks for delivery. No COD's!

To place a credit card by phone, Visa Mastercard or Discover only. You can also order and pay by e-mail. Contact Claggk@gernsback.com for details.

CALL: 631-592-6721

To use your Visa, Mastercard or Discover, complete the following:

Bill my ☐ **Visa** ☐ **Mastercard** ☐ **Discover**

Card No. _____

Exp. Date _____

Signature _____

MAIL TO: Claggk Inc.
Reprint Bookstore, P.O. Box 12162, Hauppauge, NY 11788.
SHIPPING CHARGES IN USA & CANADA

All payments must be in U.S. funds

Up to $5.00	$2.00	$30.01 to 40.00	$6.00
$5.01 to $10.00	$3.00	$40.01 to 50.00	$7.00
$10.01 to 20.00	$4.00	$50.01 and above	$8.50
$20.01 to 30.00	$5.00		

Overseas Orders must contact CLAGGK for shipping charges.

Total price of merchandise ..... $ _____
Shipping Charge (see chart) ..... $ _____
Subtotal ..... $ _____
Sales Tax (New York State Residents only) ..... $ _____

Name _____ Total Enclosed ..... $ _____

Address _____

City _____ State _____ Zip _____

CL01

www.americanradiohistory.com

LETTERS

(continued from page 4)

A State-Of-The-Art System

The November 2000 issue's "Letters" column included a brief letter, "Articles Wanted," from a fellow from Zapata, TX. I agree with that item.

In addition, I need a video-signal color-display—flat plasma about 5 inches in size. More importantly, I need a Doppler Direction-Finding Unit for the VHF, UHF, and microwave bands. Of course, the theory behind a state-of-the-art system should be covered at great length. Articles on these subjects would be appreciated.

CHARLES T. GRASSER
Toronto, Ontario

Haves & Needs

I would like some help from your readers, if possible. Being an avid reader of **Poptronics**, I notice how many of your readers have found solutions to their problems. I have a Regency scanner that was given to me needing repairs. Now it's repaired, I need operating instructions for it. It is a Regency four-band scanner, Model #MX4200—Frequency (30–50)–(118–174)–(406–515)–(800–950) MHZ. Also, what is the best overall antenna (mobile) to use? I will gladly pay for information and shipping. I would appreciate any help you can give me.

JIM ERICSON
70 Warner Ave.
Oakville, CT 06779 P

HANDS-ON REPORT

(continued from page 21)

capacity of 8, 16, or 32 Mbytes. Using "Options," the 8 MB disk can be ordered as the *MemoryKey* on the IBM Web site *(www.IBM.com)* and sells for $49. For higher memory, the Dell Web site *(www.Dell.com)* provides all three storage capacities. The 8-MB, 16-MB, and 32-MB disks sell for $42.95, $58.95, and $84.95, respectively. There is also information on the Compaq Web site *(www.Compaq. com)* and for future distribution; there is a pending OEM agreement with Apple.

For customer support, the DiskOnKey Web site *(www.diskonkey.com)* is broken down into seven main sections. First, there is product information on capabilities and specifications, with a three-step diagram on how to use the product along with written instructions. Second is a download area with driver installation for older operating systems. There are specific step-by-step instructions dealing with Windows 98. There is support for frequently asked questions and a registration area to obtain a form for a one-year warranty. There are direct links to the two sites currently selling DiskOnKey. Finally, there is a section entitled "about" which lists how to contact the four different worldwide offices and a general company background.

For more information, contact M-Systems, 8371 Central Ave., Suite A, Newark, CA 94560; 510-494-2090; *www.diskonkey.com;* or circle 80 on the Free Information Card. P

DIGITAL DOMAIN

(continued from page 28)

it's providing protection.

Ideally, and forgive the geek-speak here, your surge suppressor should have a rating of 300 joules or more, a let-through factor of 330 volts or less, and a response time of one nanosecond or less. Make sure the unit also has lights to indicate it's still working.

American Power Conversion, at *www.apcc.com*, and Tripp Lite, at *www.tripplite.com*, are two power-protection companies I've had good experiences with, whose products receive good reviews in computer magazines and *Consumer Reports*.

SAFETY MEASURES

Just as it's good practice to keep air in your car's spare tire, you should have a recent back-up of your crucial data to get back up to speed if calamity does strike. PCs can be replaced, but sometimes data, when literally smashed to bits, cannot. The safest measure of all is to unplug your computer equipment during an electrical storm. This can be a good move in a home setting, but for computerized businesses it's the equivalent of running out of gas. Most businesses keep going—the smart ones with recent back-ups as insurance.

If you can swing it, you can further protect your computer equipment from stray voltage generated by other equipment by isolating it on its own dedicated electrical circuit. This is a job for an electrician. A device called a power-line conditioner can smooth out harmful voltage fluctuations if you're not getting "clean" power from your electric company. Most UPSs include voltage-regulation capabilities.

If you are working inside a PC, first turn off the machine and "ground" yourself. Leaving the PC plugged in, touch a metal surface inside the computer to dissipate static electricity that can zap a PC's tiny circuits.

Finally, it's best to power on a PC when you begin computing on any given day and power off when you're done. Turning a computer off a lot causes a PC's innards to expand and contract too frequently, creating stress that can lead to premature component failure.

Reid Goldsborough is a syndicated columnist and author of the book *Straight Talk About the "Information Superhighway."* He can be reached at reidgold@netaxs.com or *http://members.home.net/reidgold.* P

PLANT TREES FOR AMERICA

www.americanradiohistory.com

SHORT CIRCUITS

mailto: shortcircuits@gernsback.com

CHRIS LA MORTE

Experimenting With Audio Circuits

Welcome to the first installment of "Short Circuits"—a column geared towards electrical experimentation. Here you'll find easy-to-build circuits as well as inspiring biographies of pioneering inventors and researchers. Please note that the circuits contained here are for your pure tinkering pleasure and, therefore, there may be some missing values here and there. Consider this column an informal circuit cookbook for your breadboarding needs.

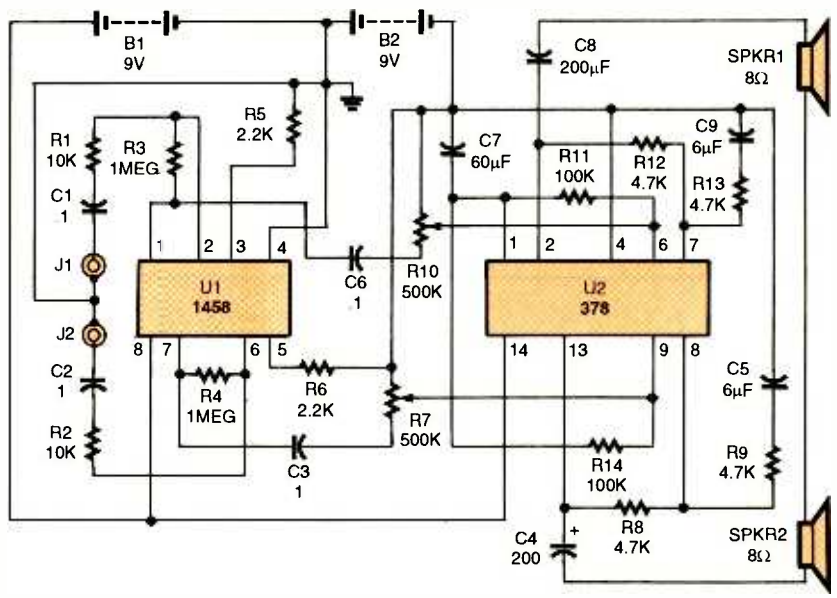

A MINI-STEREO CIRCUIT

Our first circuit is powered by a dual 4-watt amplifier (**LM378**) and a dual op-amp (**MC1458**). The dual op-amp has been configured as a pre-amp. This circuit can power two 8-ohm speakers. A daring inventor could possibly add a pre-emphasis stage or even an EQ circuit that conditions the output.

Van de Graaff

Robert Jemison Van de Graaff (1901–1967), was born in Tuscaloosa, Alabama. After graduating from the University of Alabama in 1922, he went on to complete his Ph.D. from Oxford in 1928. Many years of his life were spent researching and teaching at MIT—the *M*assachusetts *I*nstitute of *T*echnology.

Van de Graaff is best known for his self-named generator, which he developed in 1931 for nuclear physics experimentation. This electrostatic particle accelerator produces extremely high voltages and was initially used in researching atom-smashing and high-energy X-rays. Today, the machine is used to teach audiences about electricity and lightning.

Consisting of a spherical high-voltage terminal mounted atop an insulating column, the prototype stood six feet tall and was able to produce around one million volts of static electricity. A continuous electric charge accumulates from a rapidly moving belt within the column, creating an electrifying emission from the sphere.

www.americanradiohistory.com

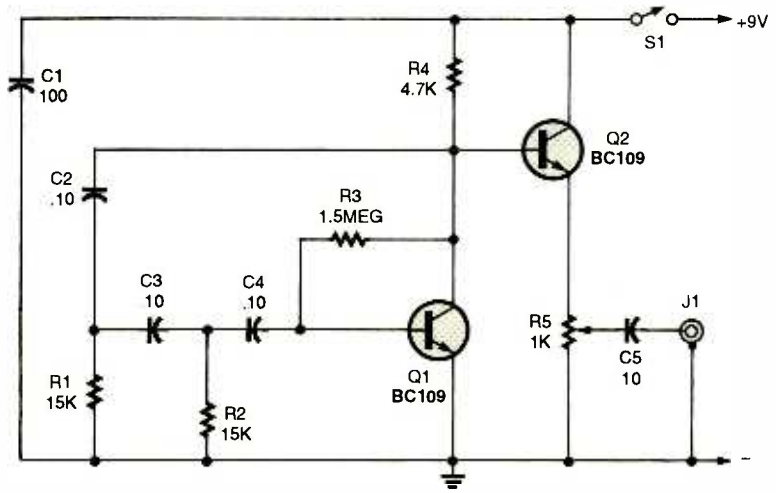

AUDIO GENERATOR

Upon completion, this circuit will produce a sinusoidal waveform of approximately 8 volts peak-to-peak at about 500 Hz. This is a sturdy test tone for tracing audio through a sound system or just pestering the neighbors. What would happen if the RC networks were changed? Would this affect the tone?

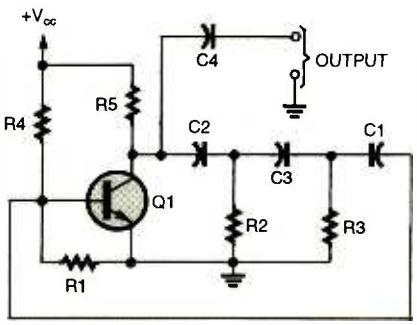

FEEDBACK OSCILLATOR

In this circuit three RC networks each shift the phase of a signal by 60 degrees. The 180-degree phase shift of the signal occurs between the base and collector of Q1, causing oscillation. This oscillator can be used in conjunction with the previous tone generator for some interesting effects.

Joule

James Prescott Joule (1818–1889) was born in Manchester, England. At the age 16 he was sent to Cambridge University. Throughout his life he made significant contributions to the fields of heat, electricity, and thermodynamics. He is most widely known for the unit of energy that is named in his honor.

Attracted to the idea of replacing steam engines with electric motors, he invented an electromagnetic engine. While proceeding with this task, Joule studied how to measure the heat generated by electric currents, established an attraction between electromagnets, and showed that electromagnetic properties were different depending on the type of iron in the electro-magnet.

His most important contribution was determining the amount of work necessary to produce a given amount of heat, as well as establishing the cooling effect that occurs when a gas is rapidly expanded. He discovered many laws, including his own—Joule's Law—which states that the heat generated by a steady electric current in a wire is related to the resistance of the wire, the square current, and time.

www.americanradiohistory.com

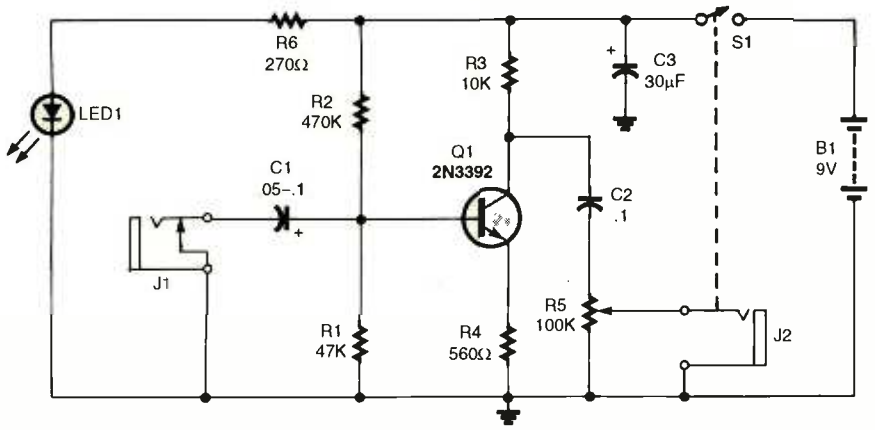

MORE POWER

Here is a quick circuit that boosts audio by 20 dB. The values shown provide a plus or minus 3.0-dB response from 120 to over 20,000 Hz. Capacitor C1 can be changed to .1µF in order to reduce the low-end roll-off frequency of the circuit. Perhaps the booster can be integrated into the mini-stereo circuit as a power-amp stage.

Hertz

Gustav Hertz (1887–1975), was born in Hamburg, Germany. In 1911 he graduated from the Universities of Munich and Berlin. He was a professor at Berlin's Technical Institute for a time and later researched the atomic bomb for the USSR. When he returned to Germany, he taught at Leipzig's Karl Marx University.

Together with James Franck, Hertz was awarded the Nobel Prize for Physics in 1925. Their research conducted in 1914 examined the impact of electrons upon atoms. Both men did separate research as a precursor to their work together—which eventually lead to the current laws of physics.

Hertz studied infrared absorption of carbon dioxide in relation to pressure and partial pressure and measured the ionization potentials of varied gases. He demonstrated the quantitative relationship between a series of spectral lines and energy losses of electrons in collisions with atoms corresponding to the stationary energy states of the atoms.

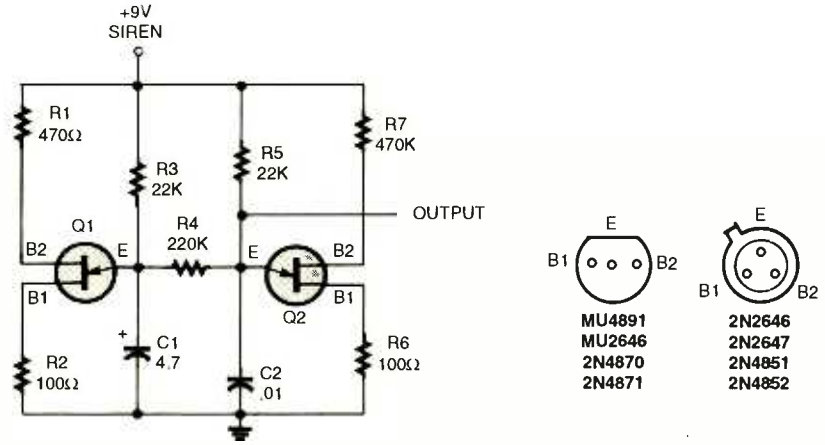

POCKET SIREN

Whether you want to startle intruders or just want to tinker with noisy gadgets, this siren circuit can be of use. Transistors Q1 and Q2 are used as sawtooth oscillators. The low-frequency control is accomplished by Q1, and Q2 is the tone generator. This circuit is an excellent example of how an RC constant provides control within a circuit.

www.americanradiohistory.com

BUDGET PROJECT AND COMPUTER BOOKS

☐ **BP294—A Concise Introduction to Micro-soft Works $6.99.** You can use the word processor to your advantage to type, edit, print and save documents. This book explains how Works can be used to build up simple spreadsheet examples, edit them, save them, print them and retrieve them. It informs you how to create simple macros, and to simplify long repetitive tasks and to customize the program to your own needs.

☐ **BP350—Electronic Board Games $6.99.** Twenty novel electronic board games that you can build from the plans in this book. Whether you are interested in motor racing, searching for buried treasure on a barren island or for gold in Fort Knox, spinning the wheel of fortune, or doing a musical quiz—there is something for you to build and enjoy!

☐ **BP378—45 Simple Electronic Terminal Block Projects $6.99.** 45 easy-to-build electronic projects that can be built by an absolute beginner. Projects are assembled on terminal blocks using only a screwdriver and other simple hand tools. No soldering is required.

☐ **BP432—Simple Sensor Terminal Block Projects $6.99.** This book is the next logical step from the above book (BP378), by the same author. This is an *open sesame* to the practical world of electronics for youngsters or beginners.

☐ **BP367—Electronic projects for the Garden $6.99.** Electronics enters the Garden! Gardeners can build simple gadgets to promote success where the elements work against you. Some of the projects are: over/under temperature monitoring, dusk/dawn switching, automatic plant watering, warming cables, etc.

☐ **BP368—Practical Electronics Musical Effect Units $6.99.** There is a constant hullabaloo for musical effects projects by the hobbyist community. This book provides practical circuits for several projects that range in complexity and are sure to work. All the circuits are easy to build and use readily-available parts.

☐ **BP385—Easy PC Interfacing $6.99.** The built-in ports in your PC provide an easy and hassle-free way of interfacing your circuits. This book provides useful PC add-on circuits including the following: Digital input/output ports; analog-to-digital and digital-to-analog converters; voltage and current measurement circuits; resistance and capacitance meters, temperature measurement interface, biofeedback monitor, and many other useful interfaces.

☐ **BP396—Electronic Hobbyists Data Book $7.99.** This book contains details of a modern five-band resistor code or an old color code for a ceramic capacitor, the formula for parallel resistance, and basic data on an NE5534AN operational amplifier.

☐ **BP129—An Introduction to Programming the ORIC-1 $2.99.** This book has been written for readers wanting to learn more about programming and how to make best use of the ORIC-1 microcomputer's many powerful features. Most aspects of the ORIC-1 are covered, the omissions being where little could usefully be added to the information provided by the manufacturer's own manual. Starting with simple commands and programs, the more complex topics such as animated graphics and using sound commands are introduced.

☐ **BP131—Micro Interfacing Circuits – Book 2 $3.99.** This book is intended to carry on from where Book 1 left off. It is primarily concerned with practical applications beyond the parallel or serial interface to the microprocessor. It is about "real world" interfacing including such topics as sound and speech generators, temperature and optical sensors, motor controllers etc. Like Book 1 the subject is not treated in a purely theoretical manner.

☐ **BP298—Concise Intro to the Macintosh System and Finder $5.99.** This book explains: The System and Finder, what they are and what they do; how to use the System and Finder to manipulate disks, files and folders; configuring and printing files from the Finder; getting the most from the system utility programs; and running MultiFinder.

☐ **BP316—Practical Electric Design Data $7.99.** A comprehensive ready-reference manual for electronic enthusiasts with over 150 practical circuits. It covers the main kinds of components (from pig-tail leads to surface mount), pinouts, specs and type selection. Basic units are defined and most used formulae explained. Five additional sections are devoted to circuit design, covering analog, digital, display, radio and power supply circuits.

☐ **BP345—Getting Started In Practical Electronics $6.99.** This book provides basic essentials for the builder and 30 easy-to-build fun projects with which every experimenter should toy. Printed-circuits designs are included to give your project the professional touch.

☐ **BP451—Troubleshooting Your PC Printer $8.99.** Explains the different printer types, their suitability for different tasks, the costs of running them, how to connect them and get the driver software running and, of course, what is most likely to go wrong and what you can do for yourself. Most important of all, it warns you of what you should quite definitely NOT try to do for yourself.

☐ **PCP112—Digital Electronics Projects $10.99.** Contains 12 digital electronics projects suitable for the beginner to build with the minimum of equipment—from instrumentation to home security, and a few "fun" projects too. With one exception, all projects are battery powered, and therefore, are completely safe for the beginner or young constructor.

☐ **PCP107—Digital Logic Gates and Flip-Flops $10.99.** This book seeks to establish a firm foundation in digital electronics. It is for the user who wants to design and troubleshoot digital circuitry with full understanding of the principles. No background other than a basic knowledge of electronics is assumed.

☐ **BP317—Practical Electronic Timing $6.99.** This book provides the time measurement theory and backs it with a wide range of practical construction projects. Each project has how-it-works theory and how to check it for correct operation.

☐ **BP325—A concise User's Guide to Windows 3.1 $6.99.** Understand what hardware specification you need to run Windows 3.1 successfully, and how to install, customize, fine-tune and optimize your system. Get into understanding the Program Manager, File Manager and Print Manager. Tips on the word processor, plus how to use Paintbrush. More on the Cardfile database with its auto-dial feature, Windows Calendar, Terminal, Notepad, etc.

☐ **BP327—DOS: One Step at a Time $5.99.** There will be times when you absolutely need to use DOS to carry out 'housekeeping' functions. This book starts with an overview of DOS, and later chapters cover the commands for handling disks, directories and files.

☐ **PCP120—Multimedia on the PC! $14.95.** Multimedia can do lots of nice things! This 184-page book helps you create your own multimedia presentation. Multimedia applications by people like you can revolutionize educational and business applications as well bring more fun, fun, fun into your leisure computer activities.

☐ **BP404—How To Create Pages for the Web Using HTML $7.99.** HTML is the language used to create documents for Web browsers such as Mosaic, Netscape and Internet Explorer. These programs recognize this language as the method used to format the text, insert images, create hypertext and fill-in forms. HTML is easy to learn and use. This book explains the main features of the language and suggests some principles of style and design. Within a few hours, you can create a personal Home Page, research paper, company profile, questionnaire, etc., for world-wide publication on the Web.

☐ **BP411—A Practical Introduction to Surface Mount Devices $6.99.** This book takes you from the simplest possible starting point to a high level of competence in working with Surface Moint Devices (SMD's). Surface mount hobby-type construction is ideal for constructing small projects. Subjects such as PCB design, chip control, soldering techniques and specialist tools for SMD are fully explained. Some useful constructional projects are included.

☐ **BP379—30 Simple IC Terminal Block Projects $6.99.** Here are 30 easy-to-build IC projects almost anyone can build. Requiring an IC and a few additional components, the book's 'blackbox' building technique enables and encourages the constructor to progress to more advanced projects. Some of which are: timer projects, op-amp projects, counter projects, NAND-gate projects, and more.

☐ **BP401—Transistor Data Tables $7.99.** The tables in this book contain information about the package shape, pin connections and basic electrical data for each of the many thousands of transistors listed. The data includes maximum reverse voltage, forward current and power dissipation, current gain and forward transadmittance and resistance, cut-off frequency and details of applications.

☐ **ETT1—Wireless & Electrical Cyclopeia $4.99.** Step back to the 1920's with this reprinted catalog from the Electro Importing Company. Antiquity displayed on every page with items priced as low as 3 cents. Product descriptions include: Radio components, kits, motors and dynamos, Leyden jars, hot-wire meters, carbon mikes and more.

☐ **BP76—Power Supply Projects $3.99.** Presents a number of power-supply designs including simpled unbiased types, fixed voltage-regulated types and variable voltage stabilized designs. All are low-voltage types intended for use with semiconductor circuits. Apart from presenting a variety of designs that will satisfy most applications, the data in this book should help the reader to design his own power supplies. An essential addition to the experimenters electronics library.

ELECTRONIC TECHNOLOGY TODAY INC.
P.O. Box 240, Massapequa, NY 11762-0240

Name _____

Address _____

City _____ State ___ Zip _____

Allow 6-8 weeks for delivery

SHIPPING CHARGES IN USA ONLY

$0.01	to $5.00	$2.00
$5.01	to $10.00	$3.00
$10.01	to $20.00	$4.00
$20.01	to $30.00	$5.00
$30.01	to $40.00	$6.00
$40.01	to $50.00	$7.00
$50.01	and above	$8.50

SORRY No orders accepted outside of USA & Canada

No. of Books Ordered ☐

Total price of books . . . . . $ _____
Shipping (see chart) . . . . . $ _____
Subtotal . . . . . $ _____
Sales Tax (NYS only) . . . . . $ _____
Amount Enclosed . . . . $ _____

All payments must be in U.S. funds! ET12

www.americanradiohistory.com

Q & A

mailto: q&a@gernsback.com

READERS' QUESTIONS, EDITORS' ANSWERS
CONDUCTED BY DEAN HUSTER

Switches

Some of you noticed the obvious switcheroo with the captions in the June 2001 column. I had made some changes and then forgot to switch things around. The captions for Fig. 1 and Fig. 2 are reversed and those for Fig. 3 and Fig. 4 are reversed. Solely my fault on that one.

I also noticed that somewhere in production, a couple of labels were dropped on Fig. 6. The resistor from "INPUT" is R1, a 100K resistor. By the way, both R1 and R2 would be best as 1% metal film types. The capacitor connected to pin 3 is C2, a 10-microfarad electrolytic with a "+" on the pin-3 end. In the text, R4 is obviously the adjustment, not R3.

Carbon Piles

Q *I found a carbon pile manufactured by "Beck Bros Phila Pa" (as marked on the end plates), but could not find the brothers on the Web. I would like to know what is the current rating and are devices like this still being used today? This one has 55 3 × 3 × ¼-inch carbon plates that are compressed by a lead screw. It has two high-current terminals that can be placed anywhere in the stack. The resistance is too low to measure with a standard DMM. What does one do with a 21-pound thing like this?—Frank, via e-mail*

A To those who are not familiar with machined hardware, Frank was referring to a "lead screw," pronounced "leed" and not "led." It's a steel screw machined with threads that won't allow it to bind.

Carbon piles (I'll ignore the potential humor here), originally known as compression rheostats, are normally used in high-current, high-power circuits. At one time, large ones were used for motor speed controls in electric fork lifts and small ones for adjusting vacuum tube filament voltage in radios. Many of the original circuits using them have been replaced by modern electronic control circuits. Today, you'll still find them used in automotive battery and electrical system testers. They're used to place heavy loads on circuits, drawing up to 1000 amps, and they dissipate a lot of heat. Some are forced-air cooled. They all have very short duty cycles in this application, typically used as a load for 15 seconds and then given a long time to cool down before repeating the cycle. Also, in these uses, the adjusting screw is spring-loaded so that the pile returns to a high resistance when the technician's hand releases the control knob.

A carbon pile is a very low value, variable resistance. As the screw is tightened and the plates are compressed together, the resistance gets lower. Resistance values are often less than one ohm, many times getting into the low milliohms. They are not very precise devices and the same setting will produce a different resistance each time. Their main function is variability and high power dissipation as opposed to repeatability.

In 1903, Lynde Bradley and Dr. Stanton Allen formed the Compression Rheostat Company, which was renamed Allen-Bradley in 1909. A-B and Clairostat both produced compression rheostats in the early years of electronics.

Solid-State vs. Hollow-State

Q *In a reply regarding phase splitters ("Q & A," June 2001), you said that it is "still a common practice in .... tube amplifiers that are sold for ridiculous prices to unsuspecting consumers. Ah, but that's another story." I realize that y'all aren't Paul Harvey, but I would be interested in having you elaborate a bit on this comment. What is the rest of the story? Tube equipment has a HUGE following. Are all of these people just imagining that tubes sound better?—B.T., via e-mail*

A I knew that comment was going to trigger some discussion. Here's the direction that I come from on this issue. If I want to record a sound, I want the recording and the subsequent reproduction of that sound to result in an exact duplicate of that sound. I don't think that any clear-thinking individual could argue with that goal. To make this recording, I want the best microphone, the best recording equipment, the best reproducing equipment, and the best speaker, all with infinite frequency response and zero distortion. Anything else, and the reproduction is not faithful, whether the subject is a bird call, a telephone conversation, or the Oklahoma City Philharmonic Orchestra.

I will assume that the recording that I have, whether LP, cassette, or CD is perfectly rendered, and I need only to reproduce it with absolute fidelity so that what I hear is what was originally recorded. If my playback device and amplification system have zero distortion, then all I need to worry about is the speaker system and the room acoustics, both of which are the weakest links in the system anyway. To arrive at a solid conclusion, let's either eliminate the speakers and acoustics or consider them perfect.

To this end, I want an amplifier with zero distortion and infinite frequency response, whether it be of solid-state or vacuum-tube design. As a general rule, you're not going to find that in a tube design. Most use one or more transformers in the signal path which limit frequency response in both directions. Most have a lot of distortion products, which designers often deliberately enhance to make the amplifier sound more "warm." Why? Was the orchestra "warmer" than what was recorded on the CD? How would you know that? Why would you want to modify the sound from the original?

Are tube amps better? Just ask an electric guitar player. He'll say that a tube amp sounds better. I can't argue with that. The difference is that the guitar player is CREATING a sound, originating a sound, making a sound just like he wants. Good gravy, he'll even use a fuzz box and other devilish accessories to inject unheard-of distortion into his sound. Hoever, he's not reproducing something that already exists. He's an artist who is rendering his work in sound.

Are all of these people just imagining that tubes sound better? No. They sound better to THEM. The tube cir-

www.americanradiohistory.com

cuits create the sounds they want to hear, and it doesn't matter if it's off from the original by 17%. It just sounds better to them. When you look at any reproduction equipment, you have to wonder: If faithful reproduction is the desire (and the tube-huggers will swear that their equipment is more faithful in reproduction), then why do all of our systems have tone controls, filters, and equalizers? Because nobody wants a system with flat response. We have room acoustics and lousy speakers to deal with. Our knobs let us compensate and think we have it perfect. Too bad that none of us knows what perfect is.

Another point deals with the folks known to have "golden ears" who claim to be able to tell the difference between $8000 low-oxygen, spun-copper, ultra-reverse-twist, gold-plated speaker cables and zip cord speaker cables as well as other items of sound reproduction. There have been many professionally-monitored "double-blind" tests performed with these "golden eared" folks as the subjects, and they consistently fail to pick out their special cords, reproduction equipment, connectors, amps, or speakers. Most of these folks now refuse to participate in such tests, labeling them as trickery.

Bookmarks to Favorites

Q *I have an old computer with Netscape Navigator 3 as a Web browser. Now I got a new computer with Microsoft Internet Explorer 4 (IE). My question now is how to move all my old bookmarks from my old computer into the new one?—S.T., North Bay, Ontario*

A The gurus at PC Mechanic, (*www.pcmech.com*), tell me that in Explorer, you can click on File, then on Import/Export to import your favorites. This implies that you have your old Navigator loaded on the new machine as well.

Another way might be to load your new Windows onto the old machine as an upgrade, do the above with the Import/Export, copy the Favorites folder onto a diskette, and then copy that diskette into the new Favorites folder on the new machine.

Any time you start with a fresh machine and new software, it's always a hassle to move old files to the new system. I've always been under the impression that it was easier to work with the Bookmarks in Navigator because the URLs were easy to see. You could just print that list of URLs from the old machine and manually enter them into the IE address line and then Save the favorites. One thing about doing it manually is that it gives you the opportunity and the incentive to do a little housecleaning to get rid of the URLs that you don't really need anymore.

At *http://help.netscape.com/kb/consumer/19980914-23.html* you can find a way to go the other direction with your favorites. At *www.zdnet.com/dowloads/stories/info/0,,000PEC,.html* (watch those commas in that URL) you can download a program that will allow you to share bookmarks/favorites between IE and Navigator if you use both browsers.

Uses For Old Computers

LCDR Horace Lassel, USN, wrote to list some uses for old computers in response to the question in the May 2001 column. Where I was discouraging the use of boards away from the motherboard because of the hassle of interfacing, Horace's suggestions are for using

HOW TO GET INFORMATION ABOUT ELECTRONICS

On the Internet: See our Web site at *www.poptronics.com* for information and files relating to **Poptronics** and our former magazines (**Electronics Now** and **Popular Electronics**) and links to other useful sites.

To discuss electronics with your fellow enthusiasts, visit the newsgroups *sci.electronics.repair, sci.electronics.components, sci.electronics.design*, and *rec.radio.amateur.homebrew*. "For sale" messages are permitted only in *rec.radio.swap* and *misc.industry.electronics.marketplace*.

Many electronic component manufacturers have Web pages; see the directory at *www.hitex.com/chipdir/*, or try addresses such as *www.ti.com* and *www.motorola.com* (substituting any company's name or abbreviation as appropriate). Many IC data sheets can be viewed online: *www.questlink.com* features IC data sheets and gives you the ability to buy many of the ICs in small quantities using a credit card. You can also get detailed IC information from *www.icmaster.com*, which is now free of charge although it formerly required a subscription. Extensive information about how to repair consumer electronic devices and computers can be found at *www.repair faq.org*

Books: Several good introductory electronics books are available at RadioShack, including one on building power supplies.

An excellent general electronics textbook is *The Art of Electronics*, by Paul Horowitz and Winfield Hill, available from the publisher (Cambridge University Press, 800-872-7423) or on special order through any bookstore. Its 1125 pages are full of information on how to build working circuits, with a minimum of mathematics.

Also indispensable is *The ARRL Handbook for Radio Amateurs*, comprising over 1000 pages of theory, radio circuits, and ready-to-build projects, available from the American Radio Relay League, Newington, CT 06111, and from ham-radio equipment dealers.

Back issues: Copies of back issues of and past articles in **Electronics Now**, **Popular Electronics**, and **Poptronics** can be ordered on an "as available basis" from Claggk, Inc., Reprint Department, P.O. Box 12162, Hauppauge, NY 11788; Tel: 631-592-6721. To ensure receipt of the correct material, readers must supply complete information on the article or issue that they wish to buy.

Poptronics and many other magazines are indexed in the *Reader's Guide to Periodical Literature*, available at your public library. Copies of articles in other magazines can be obtained through your public library's interlibrary loan service; expect to pay about 30 cents a page.

Service manuals: Manuals for radios, TVs, VCRs, audio equipment, and some computers are available from Howard W. Sams & Co., Indianapolis, IN 46214; (800-428-7267). The free Sams catalog also lists addresses of manufacturers and parts dealers. Even if an item isn't listed in the catalog, it pays to call Sams; they may have a schematic on file which they can copy for you.

Manuals for older test equipment and ham radio gear are available from Hi Manuals, PO Box 802, Council Bluffs, IA 51502, and Manuals Plus, 130 N. Cutler Dr., N. Salt Lake, UT 84054.

Replacement semiconductors: Replacement transistors, ICs, and other semiconductors, marketed by Philips ECG, NTE, and Thomson (SK), are available through most parts dealers (including RadioShack on special order). The ECG, NTE, and SK lines contain a few hundred parts that substitute for many thousands of others; a directory (supplied as a large book and on diskette) tells you which one to use. NTE numbers usually match ECG; SK numbers are different.

Remember that the "2S" in a Japanese type number is usually omitted; a transistor marked D945 is actually a 2SD945.

Hamfests (swap meets) and local organizations: These can be located by writing to the American Radio Relay League, Newington, CT 06111; (*www.arrl.org*). A hamfest is an excellent place to pick up used test equipment, older parts, and other items at bargain prices, as well as to meet your fellow electronics enthusiasts—both amateur and professional.

www.americanradiohistory.com

an intact, but older, computer. One suggestion is to use the sound card, which is basically an A/D and D/A converter, to control a laser light show by driving voice coils attached to the corners of a mirror. He also uses an old machine as a juke box, playing back MP3s and has 2500 tracks digitized onto 200 CDs.

Horace also suggests using a voice-recognition software package with an X-10 computer control interface for voice control of household functions, a subject that came up in the May 2001 installment of "Q & A." The sound card could also mimic a doorbell or any alarm function. I wouldn't get too carried away with household computer control, myself. Several years ago, Steve Ciarcia of *Byte* and *Circuit Cellar INK* fame created such a system that monitored and controlled virtually everything in his house. Then one day, he accidentally locked himself out. He wrote an entire article describing his process of getting back in without triggering the computer to call every emergency service in the city.

On the subject of voice recognition for lighting control, Curt Mavity wrote to mention that Dennis Shepard wrote an article on that subject in the December 2000 issue of *Nuts & Volts* magazine.

For myself, I'm putting together a DOS computer, combining several older machines to get a fairly fast (for DOS) 586 platform, a 2 GB HD, CD-ROM, and two sizes of floppy drives with the idea of using it for DOS applications that I have, such as PCBoards, an EPROM programmer, a laser printer, an RS-232 program for interfacing to a Tektronix digital scope, and similar "utility" programs. I won't have any form of Windows installed at all.

I just realized that this is the first time I've dealt with a Naval officer where I didn't have to salute!

Expanded-Scale Meters

Q *I am somewhat ashamed to ask, but could you present a circuit and some theory behind expanded scale voltmeters? This would help with one of my little projects. There are still some slow events, still too fast for a digital meter, that can be viewed by the swing of a needle on an analog meter.—M.B., Hartford, AL*

A No need to be ashamed. That's not exactly a topic that you find in electronics textbooks, especially new editions. I should write a pamphlet about using analog meter movements and digital panel meters for various applications. Your application would be a good one to include. A normal meter indicates from zero to some maximum voltage. If we're interested in a specific, small voltage range, a traditional meter will not allow us to see small differences in voltage while an expanded-scale meter will "spread out" the voltage window of interest. More on that when we wrap up.

Let's set up a traditional voltmeter as a review of the basics of meter design. I pulled a 1 milliamp ammeter from my box of meter movements. To design a voltmeter, I need to know the voltage drop of the movement when it has the full-scale current flowing through it. To do this, I zero the meter movement with the mechanical zero on the front. Then I set up a simple circuit with a variable power supply, a resistor, and the meter movement in series, as shown in Fig. 1. The resistor was calculated to give a current of 1 milliamp with the supply set at 10 volts, where R equals 10 volts divided by 1 milliamp—which is 10K ohms. Next, I adjust the power supply voltage until the meter indicates full-scale deflection: 1 milliamp. I use a digital multimeter to measure the voltage drop across the movement itself. In this case, I came up with 43.3 millivolts.

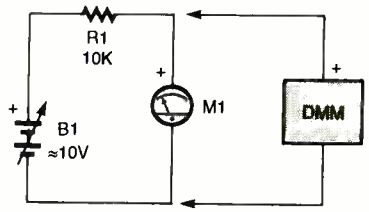

Fig. 1. A simple series circuit with a current-limiting resistor is used to determine the voltage drop of a meter movement.

If I want my voltmeter to indicate 16 volts full scale, the series resistor in Fig. 1 must drop all but the 43.3 millivolts that the meter will drop when it's at full scale and 1 milliamp is flowing through the circuit. The resistor will have 16 volts minus the 43.3 millivolts or 15.9567 volts. We won't worry about my scientific misuse of significant figures and rounding here. The value of the resistor will be 15.9567 volts divided by 1 milliamp or 15.9567K ohms, replacing our experimental 10K ohm resistor. The new resistor and the meter movement make up a zero-to-16-volt-full-scale voltmeter. If we set the power supply to exactly 16 volts, the meter will indicate full scale. The final step would be to remark the entire scale according to the new range. In a voltmeter circuit, the series resistor is called a "multiplier resistor."

The trick to an expanded scale voltmeter is to keep the meter from indicating anything until a certain threshold voltage is reached. This is an ideal job for a zener diode as shown in Fig. 2. The zener is in series with the meter movement and R1, a multiplier resistor for setting the range of the meter. A zener diode isn't perfect and may have a rounded knee voltage, and it will change its voltage drop slightly when in breakdown. Since you can't use most original meter scales for an expanded scale meter anyway, a redrawing of the scale will correct any added non-linearity caused by the zener.

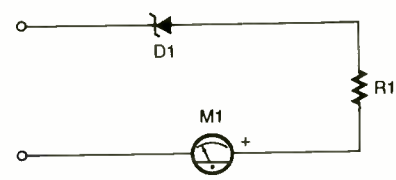

Fig. 2. A zener diode in series with a more traditional voltmeter circuit creates an expanded scale voltmeter.

Let's suppose that you want a meter for an automotive application that will monitor the 12-volt system and be able to catch 4 volts on either side of a center value of 12 volts. This means that the low-end voltage will be 8 volts. I'll choose a standard 1N756A zener diode to use for D1, which has a zener voltage of 8.2 volts. Place the zener in series with the meter and the multiplier resistor, using 10K ohms as an experimental value for the resistor. Connect a variable supply to the circuit similar to that in Fig. 1, adjust the voltage until the meter reads half-scale (500 microamps), and measure the voltage across the zener to get its exact value. Mine came out to be 8.06 volts.

When this meter is reading 12 volts, it should be at half-scale so that 8 volts will be at the "0" point and 16 volts will be at the "1" point on the original scale. When the movement is at half-current like that, only half of the 43.3 millivolts will be dropped across it or 21.65 millivolts. The voltage across the multiplier resistor will be the applied 12 volts

www.americanradiohistory.com

minus the zener drop of 8.06 volts minus the meter drop of 21.65 millivolts. This calculates out to be 3.91835 volts. When at half-scale, 500 microamps is flowing in the circuit. The value of the resistor will be 3.91835 volts divided by 500 microamps or 7.8367K ohms. The nearest standard 1% resistor would be 7.87K ohms. The last step is to remake the scale by opening up the meter and applying 8.5 volts, 9 volts, 9.5 volts, etc. and marking the scale wherever the needle falls. You can be as coarse or as detailed as you want, depending upon the application.

Normally, a voltmeter is calibrated (or the multiplier resistor is calculated) for a full-scale reading. In the case of this expanded scale meter, I wanted the center value of 12 volts to be the most accurate, not worrying about the actual voltage on either side of that center value.

Our original "standard" meter had a 2-inch scale that covered 16 volts. Each volt is spread out over about 0.125 inch, so you can't read the voltage with much precision. Our expanded scale meter uses the same 2-inch scale to measure over an 8-volt range and spreads each volt out over 0.25 inch, allowing twice the precision in reading.

In this age of digital meters, the expanded scale meter has met its doom except for those few cases where you need an analog indicator. A digital meter is expanded by simply improving the resolution of the analog-to-digital converter and adding more digits to the display. Note that expanding a meter, whether a digital or analog meter, does not necessarily improve the accuracy but only the precision (or resolution) of the measurement.

Harry's Homebrew

Between the time the copy was submitted and the time of publishing in the July 2001 issue, the URL for "Harry's Homebrew Messageboard" changed because of problems with his provider. This was one of the general electronics forums cited in that column. Such is the fluid way of Internet addresses. His new URL is *http://members3.boardhost.com/sm0vpo/*. Note that the last six characters are his Swedish ham radio call letters with zero as the third character.

Open Collector Logic

Q *What does "open collector" mean?—K.W., Acton MA*

A Most TTL devices have what is known as a "totem pole" output, consisting mainly of two transistors that force the output either HIGH or LOW as shown in Fig. 3. To the left of this output circuit is the control logic,

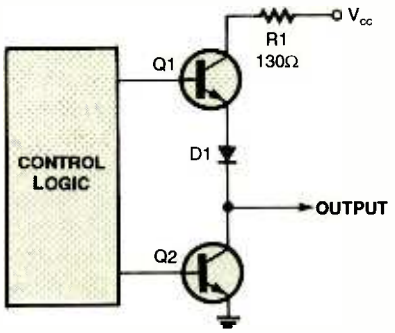

Fig. 3. The "totem-pole" output of a standard TTL gate will pull the output HIGH or LOW.

whether it be the logic for a 4-input NAND, XOR, or JK flip-flop, and that logic tells this output circuit when to go LOW or HIGH. Figure 4A illustrates the components that pull the output LOW; the parts that aren't shown are effectively open-circuited. The only thing in the current path is the transistor, and that's why a totem pole output can "sink" a lot of current. Figure 4B

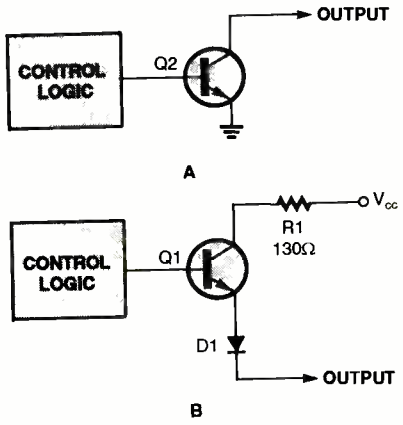

Fig. 4. The active components in a "totem-pole" output are (A) Q2 only when LOW and (B) a combination of Q1, a resistor, and a diode when the output goes HIGH.

shows the output going HIGH. Notice that besides the transistor, there is a resistor and a diode in series with the output and the power supply. This is why a logical HIGH is never +5 volts at an output and also why a HIGH output cannot source as much current. Current is limited primarily by the resistor.

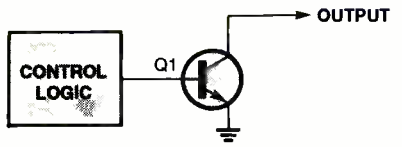

Fig. 5. An "open-collector" TTL output has a single grounded transistor, making it a very versatile output for driving loads or changing logic levels.

The open collector (OC) output is a lot simpler. As shown in Fig. 5, it still has the same control logic, but the output is nothing more than a transistor whose emitter is internally connected to the ground pin of the chip. The collector is the output. The only thing that an OC output can do is pull the output LOW. There's no way that it can go HIGH. It can only release its grasp on a LOW.

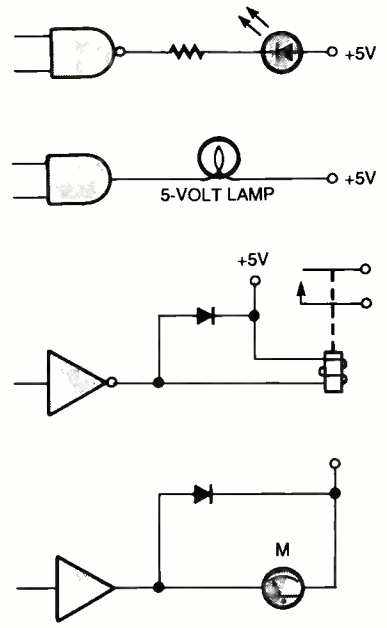

Fig. 6. A variety of loads can be driven by an "open-collector" output.

In use, an OC output is usually connected to the supply through some type of device. In this way, the transistor in the IC serves as a switch to ground, allowing current to flow through the external device. As shown in Fig. 6, you can have a variety of external devices. If the device is some sort of inductive load, such as a relay, solenoid, or motor, a diode should be placed across the inductive load so that the high voltage generated by the inductance when the transistor turns off is shunted through the diode rather than applied across the transistor junction, which could destroy it.

You are not limited to the standard

(Continue on page 64)

www.americanradiohistory.com

mailto: amazingscience@gernsback.com

JOHN IOVINE

Braitenberg Vehicles

In 1984 a book written by Valentino Braitenberg entitled *Vehicles—Experiments in Synthetic Psychology* was published. In his book Valentino describes a number of wondrous vehicles that exhibit interesting behaviors based on the use of a few electronic neurons.

Similar in concept to Grey Walters's seminal neural work with his robot tortoises, Valentino's vehicle behavior is more straightforward, making it somewhat easier to follow, both theoretically and logically, and thus easier to implement into real robotic designs.

In this article we will build a Braitenberg-type robotic vehicle using the PIC microcontroller to simulate a few electronic neurons.

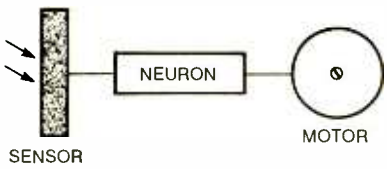

Fig. 1. This simple schematic shows the basic design of a neuron-controlled motor circuit. A light-sensitive device connects to the neuron, which in turn controls a motor.

At the heart of Braitenberg vehicles is a description of a basic neuron setup, as shown in Fig. 1. At the front end we find a sensor. In this illustration the sensor detects the intensity of light and outputs a proportional signal. Consider the sensor connected to the neuron as modular and interchangeable. Other sensors can be incorporated to detect any number of environmental variables, for example: heat, pressure, sound, vibration, magnetic fields (compass), electrical fields, radioactivity, gases (toxic or otherwise), etc.

The neuron reads the output of the sensor and activates a motor in relationship to the sensor output. What that output "relationship" is between the sensor and motor may be one of many

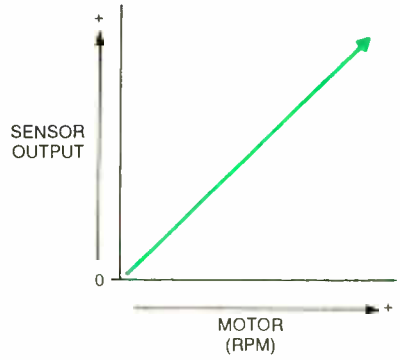

Fig. 2. This graph shows positive proportional transfer function. As the sensor output increases, the motor output also increases.

things. This is one of the variables we can program into our robot. In addition, the motor, like the sensor, represents a singular example of an output module. Other output modules may include a second neuron (or neural layer), electric circuit, switch, light, etc.

In this article we are only demonstrating the most simple and basic neural set-ups. In most neural networks many inputs (or sensors) are connected to neurons. The neuron performs a summation of the inputs (both positive and negative) and outputs a signal based

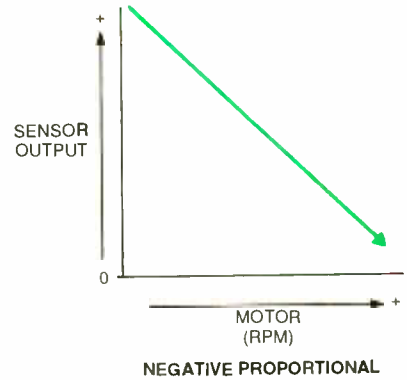

Fig 3. Here is a graph showing negative proportional transfer function. In this case, as the sensor output increases, the motor output decreases.

upon a threshold and a transfer function. The neurons are typically aligned in two-dimensional matrixes (X by Y) called a layer. Most neural networks are multi-layered. As you can see, neural network schemes can become complex

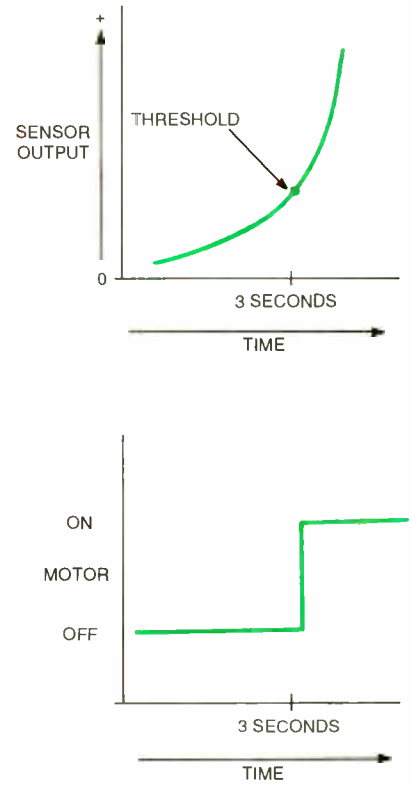

Fig. 4. This graph illustrates digital transfer function. As the senor output increases, the motor output remains unchanged until the threshold is reached; then the output switches to a fully on position.

pretty quickly. Again, we will not be creating complex networks. I did want to point out that neural networks can be and are far more complex and expansive than we have the time to delve into now. Keep in mind the results we are receiving in our Braitenberg-type vehicle with just a few simulated neurons.

www.americanradiohistory.com

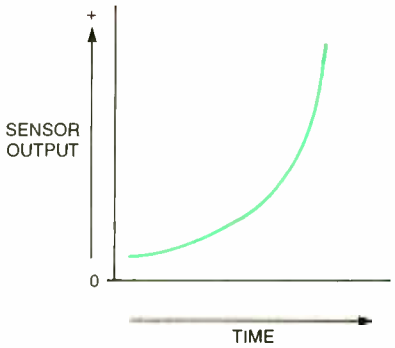

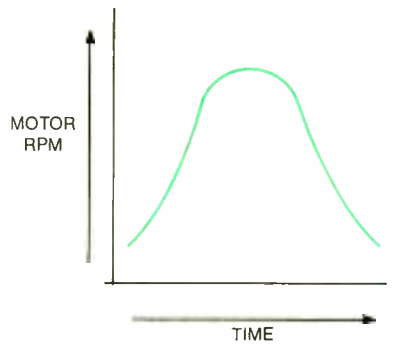

GAUSSIAN OUTPUT

Fig. 5. Here is a graph depicting Gaussian function. As the sensor output increases, the motor output follows a smooth curve.

Neural Activation

When the neuron is stimulated, it generates an output. There are a number of relationships (called transfer functions) that can exist between the sensor input and the neuron's output. Let's examine a few of them.

Positive Proportional—as input from the sensor increases activation (RPM) of motor, it increases in proportion, see Fig. 2.

Negative Proportional—as input from sensor increases activation (RPM) of motor, it decrease in proportion, see Fig. 3.

Digital—as input from sensor output exceeds a predetermined (or programmed) threshold (may be positive or negative), motor is activated, see Fig. 4.

Gaussian—as input from sensor increases, output passes through a Gaussian function for motor activation, see Fig. 5.

Vehicles

Using a basic neural set-up, we can construct a few simple vehicles that exhibit interesting behaviors. Figure 6 illustrates two vehicles labeled A and B. Both vehicles use the Positive Proportional neural setup with a light-intensity sensor.

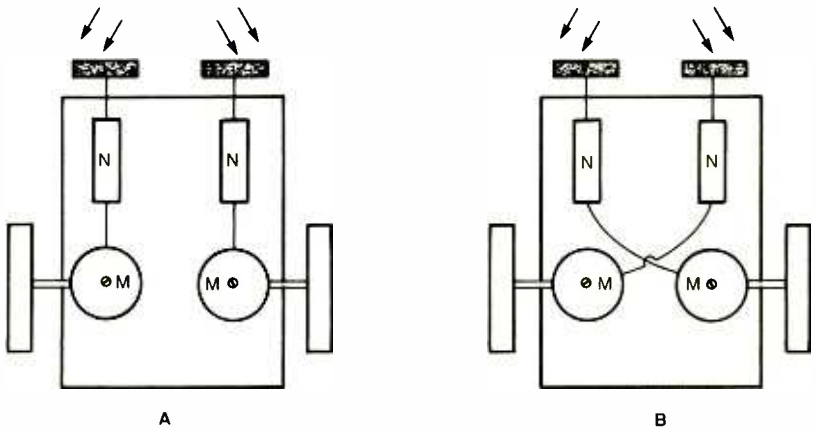

Fig. 6. The Braitenberg Vehicles can be wired direct, as in A above, or crossed, as in B above. Varying the wiring scheme will change the movement of the vehicle.

Vehicle A, if both sensors are evenly illuminated by a light source, will speed up and, if possible, run into the light source. However, if the light source is off to one side, the sensor on the side of the light source will speed a little faster than the sensor/motor on other side. This will cause the vehicle to veer away from the light source, see Fig. 7.

Vehicle B, if both sensors are evenly illuminated by a light source, will speed up and, if possible, run into the light source, (same as Vehicle A). If the light source is off to one side, the sensor on the side of the light source will run a little slower than the sensor/motor on other side. This will make the vehicle turn toward the light source, see Fig. 7.

If we use a "Negative Proportional" neural set-up, the vehicle would show the opposite behavior of the "Positive Proportional" neurons.

Building Vehicles

Okay, it's time to put the paper theory to the test and see if it really works. First, let's gather the materials needed

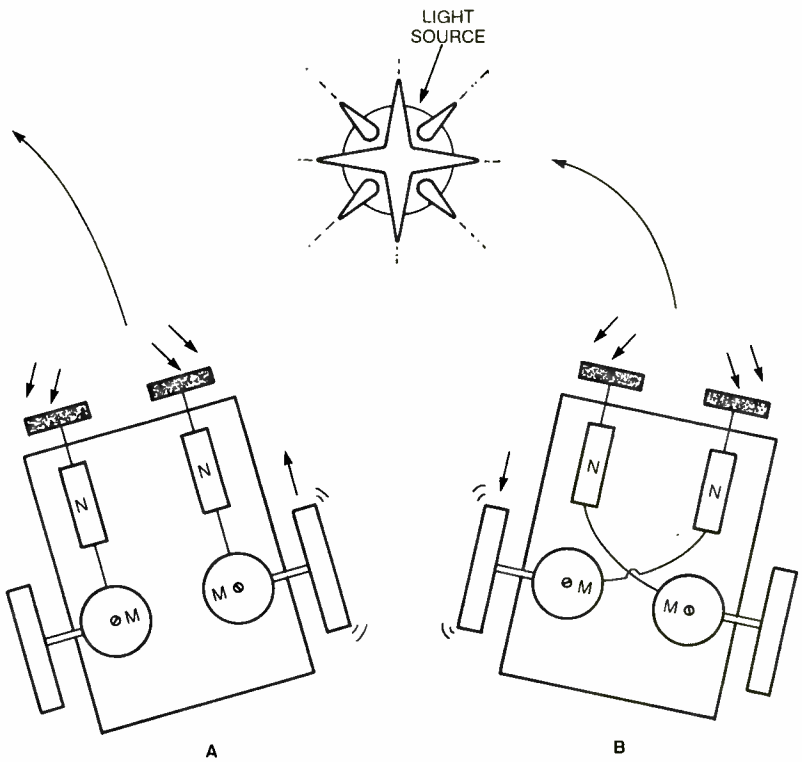

Fig. 7. Here is an artistic interpretation of how the movements of the vehicles differ according to how the sensors are wired. Note the movement of the wheels. In A, the right wheel spins forward at a fast rate, while in B the left wheel spins fast in reverse.

www.americanradiohistory.com

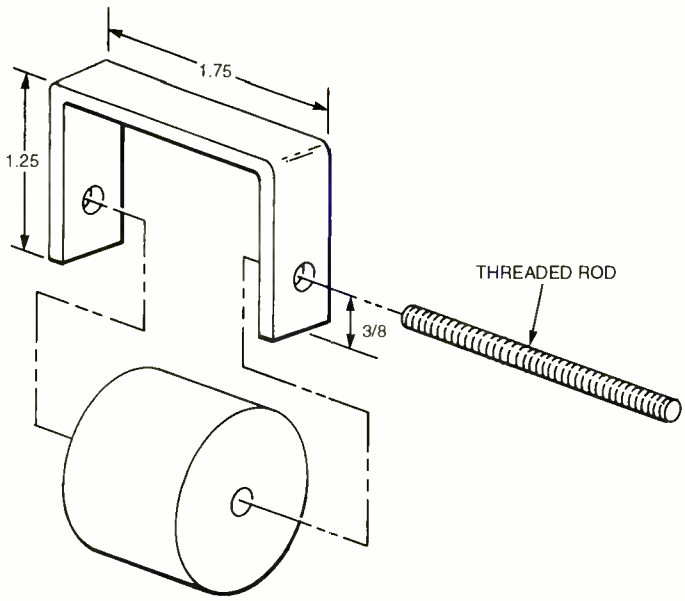

Fig. 8. This diagram shows the assembly of the wheel support. The wheel should spin freely on the threaded-rod axle.

to build a vehicle. The base of the vehicle is made of a sheet of aluminum eight inches long, four inches wide, and ⅛ inch thick. We will use two 918D 100:1 gearbox motors for propulsion and steering and one multi-directional front wheel.

We will try a new construction material and method building this robot. Instead of securing the 918D gearbox motors with machine screws and nuts, we will use an industrial 3M double-sided tape. This double-sided tape, once cured, is as strong as a pop rivet or solder. 3M had offered a sample of two metal plates secured to one another using its double-sided tape. I tried to separate two flat pieces of metal secured with the tape using pliers—it was impossible. The tape, according to 3M, requires 24 hours to reach full strength. In my experience using the tape, although I found it to be strong, it never reached the strength demonstrated with the 3M sample.

PARTS LIST

1 16F84 Microcontroller
1 4.0-MHz crystal
2 22-pF capacitors
1 1-µF capacitor
2 10-µF capacitors
2 .022-µF capacitors
2 330-ohm, ¼ watt resistors
1 4.7K ohm, ¼ watt resistor
2 CdS photoresistor cells (see text)
2 100:1 gearbox motors (918D)
2 2N3904 NPN transistors
2 1N914 diodes
2 2.25-inch diameter wheels
1 mulitdirectional wheel
1 LM2940 voltage regulator (low drop-down voltage—+5 volts)

Misc.: 6-inch length of 3mm hollow tubing, aluminum—8 × 4 × ⅛ inches thick, 2 solderless breadboards, 3M double-sided tape, battery holder for 4 D batteries, 3 inches of ¼-20 threaded rod, 2 machine screw nuts

The 918D gearbox motor has a flat bracket that is perfect for securing to the vehicle base. The tape is cut lengthwise to fit the bracket of the gearbox motor. The exposed side of the tape is immediately secured to the gearbox motor bracket. Then the motor is positioned on the bottom of the vehicle base, the protective covering of the tape is removed, and the gearbox motor is firmly placed onto the bottom of the vehicle base.

The second gearbox motor is secured to the other side in a similar

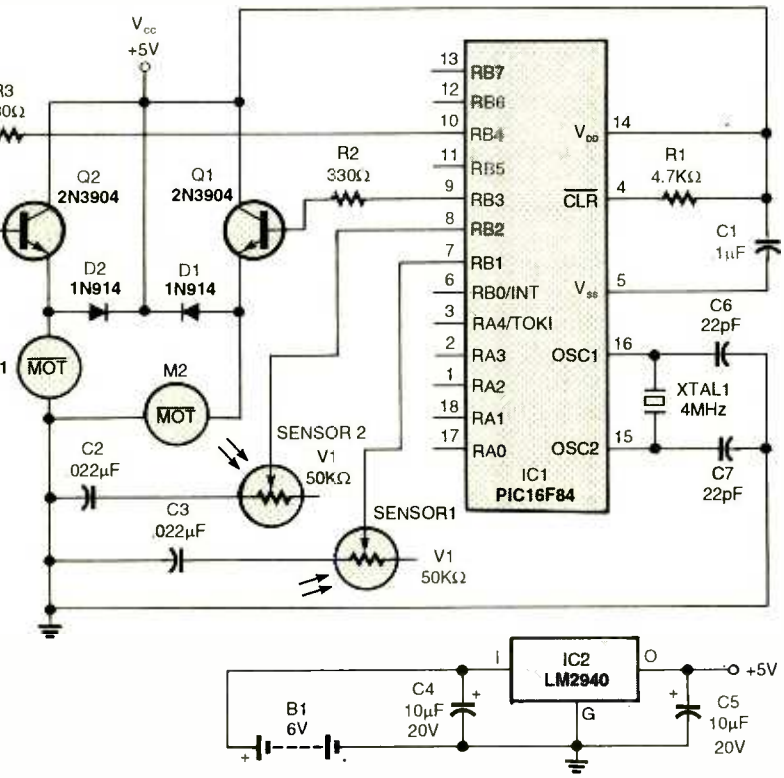

Fig. 9. This is the schematic for the electronic circuit that controls the vehicle. A PIC serves as the neuron.

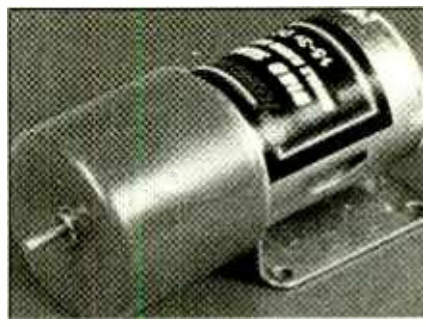

The 918D gearbox motor is shown above. The motor conveniently comes with a mounting bracket.

www.americanradiohistory.com

The undercarriage of the vehicle is where the wheels are mounted. Notice the drilled holes for passing the wire through to the top of the vehicle.

manner.

Next, we need to mount the drive wheels to the gearbox motor. The rubber wheels used in this prototype are made to friction fit a 3mm (.118 inch) shaft. The shaft diameter of the 100:1 gearbox motor is about 2mm (.078 inch).

To solve this size problem, I placed a 1.5-inch-long length of 3mm hollow metal tubing onto the shaft of the gearbox motor. I used a flat-head screwdriver and hammer to secure the 3mm tubing to the 2mm shaft. First, support the motor's shaft and tubing onto a hard

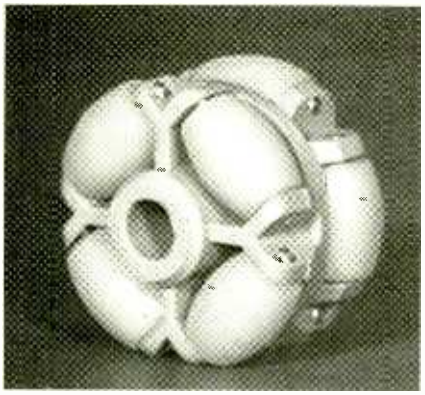

This is the multi-directional wheel that is mounted to the front of the vehicle. Eight separate rollers allow for fluid movement on most terrains.

(metal) surface that allows you to place force directly on to the shaft without causing any strain on the gears or motor. Next, place the screwdriver head on the shaft-tubing assembly and hit it sharply with the hammer. This force causes the tubing to collapse onto the shaft making a strong friction fit. Strike the 3mm tubing in one or two locations for insurance.

If one looks closely at the gearbox motor shaft, there is a key-way (flattened cutaway on the shaft) cut into the shaft. If you strike the 3mm hollow tubing at that location and collapse the tubing into the key-way, you will create a very secure fitting between the motor shaft and tubing.

The drive wheel is mounted by pushing it onto the 3mm tubing. The friction fit of the wheel is strong enough to drive the robot without any slippage. If one wishes to mount the wheel permanently (something I have not done) to the shaft, I would mix slow-setting epoxy glue and coat the 3mm shaft before mounting the wheel onto it.

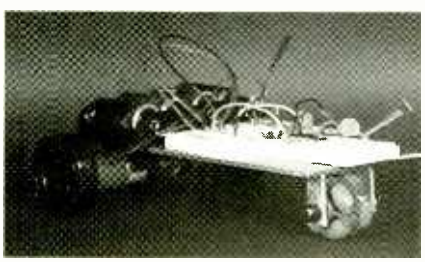

Here is a Braitenberg Vehicle ready to go. The batteries are docked at the rear.

Front Wheel

Steering is accomplished by turning on or off the gearbox drive motors in the back. For instance, turning on the right one while the left gearbox motor is off will turn the vehicle to the left, and vice versa. In similar vehicles many times the robotist will forego a front wheel entirely and use a front skid instead. This allows the vehicle to turn without concern for the front wheels pivoting in the proper direction

The Multi-Directional wheel accomplishes much the same thing as a skid, but does so with less resistance. It is constructed using rollers around its circumference that allow the wheel to rotate forward and move sideways without turning.

The multi-directional wheel is attached using a basic U-shaped bracket, see Fig. 8. The bracket is secured to the front of the vehicle base using the 3M

(Continued on page 64)

PICBASIC COMPILER program

```
'Braitenberg Vehicle 1
start:
pot 1, 255,b0        'Read CdS Cell # 1
pot 2, 255,b1        Read CdS Cell # 2
If b0 = b1 then straight
        if b0 > b1 then left
        if b1 > b0 then right

straight:
        high 3: high 4
        goto start

        left:
                b2 = b0 - b1          'Compare numerical values +/- 15
                if b2 > 15 then left1 'If greater than 15 turn left
        goto straight        'If not go to straight subroutine
left1:  'Turn Left
        high 3: low 4        'Motor control
        goto start

        right:  'Compare numerical values +/- 15
                b2 = b1 - b0          'If greater then 15 points
                if b2 > 15 then right1          'Turn toward the right
        goto straight        'if not go straight
right1: 'Turn right
high 4: low 3        'motor control
goto start 'Do again
   End
```


www.americanradiohistory.com

RETAILERS THAT SELL OUR MAGAZINE EVERY MONTH

Arizona

Elliott Elec. Supply
1251 S. Tyndell Ave.
Tucson, AZ 85713

California

All Electronics
14928 Oxnard Street
Van Nuys, CA 91411

California Electronics
221 N. Johnson Ave.
El Cajon, CA 90202

Electronics Plus, Inc.
823 4th St.
San Rafael, CA 94901

Electronics Warehouse
2691 Main Street
Riverside, CA 92501

Ford Electronics
8431 Commonwealth Ave
Buena Park, CA 90621

HSC Electronics
5681 Redwood Drive
Rohnert, CA 94928

HSC Electronics
4837 Amber Lane
Sacramento, CA 95841

Halted Specialties Co.
3500 Ryder Street
Santa Clara, CA 95051

Kandarian Electronics
1101 19th Street
Bakersfield, CA 93301

Mar Vac Electronics
2001 Harbor Blvd.
Costa Mesa, CA 92627

Mar Vac Electronics
1759 E. Colorado Blvd.
Pasadena, CA 91106

Mar Vac Electronics
4747 Holt Blvd.
Montclair, CA 91763

Mar Vac Electronics
5184 Hollister Blvd.
Santa Barbara, CA 93111

Mar Vac Electronics
2537 Del Paso Blvd.
Sacramento, CA 95815

Mar Vac Electronics
2000 Outlet Center Dr. #150
Oxnard, CA 93030

Mar Vac Electronics
12453 Washington Blvd.
Los Angeles, CA 90066

Metro Electronics
1831 J Street
Sacramento, CA 95814

Orvac Electronics
1645 E Orangethorpe Ave.
Fullerton, CA 92631

Sav-On Electronics
13225 Harbor Blvd.
Garden Grove, CA 92643

Colorado

Centennial Elec. Inc.
2324 E. Bijon
Colorado Springs, CO
80909

Connecticut

Cables & Connectors
2315 Berlin Turnpike
Newington, CT 06111

Illinois

Tri State Elex
200 W. Northwest Hwy.
Mt. Prospect, IL 60056

Maryland

Mark Elec. Supply Inc.
11215 Old Baltimore Pike
Beltsville, MD 20705

Massachusetts

Electronic Hook-Up
104 Main St.
Milford, MA 01757

"You-Do-It" Electronics
40 Franklin Street
Neeham, MA 02494

Michigan

Purchase Radio Supply
327 East Hoover Avenue
Ann Arbor, MI 48104

The Elec. Connection
37387 Ford Road
Westland, MI 48185

Minnesota

Acme Electronics
224 Washington Avenue N.
Minneapolis, MN 55401

Missouri

Gateway Electronics
8123-25 Page Blvd.
St. Louis, MO 63130

New Jersey

Lashen Electronics Inc.
21 Broadway
Denville, NJ 07834

New York

LNL Distributing Corp.
235 Robbins Lane
Syosset, NY 11791

T&M Elec. Supply, Inc.
472 East Main Street
Patchogue, NY 11772

Unicorn Electronics
Valley Plaza
Johnson City, NY 13790

Ohio

Parts Express
725 Pleasant Valley Drive
Springboro, OH 45066

Oregon

Norvac Electronics
7940 SW Nimbus Avenue
Beaverton, OR 97005

Texas

Computers Electronics Etc.
110 E. Medical Center Blvd.
Webster, TX 77598

Electronic Parts Outlet
3753 B Fondren
Houston, TX 77063

Tanner Electronics
1301 W Beltine
Carrollton, TX 75006

Washington

Supertronix Inc.
16550 W. Valley Hwy.
Tukwila, WA 98188

Barnes & Noble • B. Dalton • Crown Books • Tower Books • Super Stand
Borders Book Store • On Cue • Hastings • Media Play • Walden Book Store
Just About Every Major Book Store!

If you'd like to sell our magazine in your store, please circle 180 on free information card or Contact Gina Giuliano at (631) 592-6720 ext 215

www.americanradiohistory.com

TECHNOSCOPE

(continued from page 24)

ple programming language developed by Netscape to enable Web authors and designers to create interactive sites), and Active X. Browsers can be downloaded free on the Internet and are provided free of charge by ISPs.

- **Search Engines:** No, we're not talking about V-8s, but just one more helpful tool to make life on the Web easier. A search engine consists of software that was created to help people seeking information find what they need. Similar to the card catalogue in your local library, but infinitely faster, search engines make it possible to find information on virtually any topic—instantaneously. Some of the most popular search engines include Excite, HotBot, Yahoo, AltaVista, and Google.

- **E-mail:** The most common use, and main source of mystery regarding the Internet, is in the Internet application of Electronic mail, better known as e-mail. When pressing that send button, have you ever wondered where your letter is going *before* it reaches your Aunt Mildred? According to Kathy Hendershot, President of Virtual Impax.com, E-mail is "...an application, something we do online. When you address an e-mail, it's a lot like addressing a snail-mail letter. It works like this: Your e-mail is sent out via the computer that is connected to the Internet. The ISP sees the information as a message for someone at another computer by looking at the second part of the email. This is the @yourdomain.com part. The computer in your office or home can call the computer where your mail server lives and ask it to "deliver" your new e-mail."The route that your e-mail takes is similar to a road map; there are hundreds of paths and just as many roadblocks. Just like you may encounter a detour on the way to work, your e-mail can run across a cyber-block and be forced to go a different way. For a quick way to find out the path your messages took before reaching your inbox, go to the "File" tab, click on "Properties" and then "Details". This will show you exactly where your e-mail has been.
- **Web Sites:** Have you ever wondered where your Web site "lives"? Don't be embarrassed; you are not alone. Web sites reside in servers—a computer that "serves" files. Each server has its own IP address, an identifier for a computer or device on a TCP/IP network. For example, if your IP address is 209.15.41.225, the numbers 209.15 stand for the network to which it is connected. The last numbers act as a secondary address—kind of like a "back door." Some servers are so busy that they have 3-4 "other doors." A domain name is an easy way for people to remember IP addresses. It is much easier to remember www.yourdomain.com than it is to remember 209.15. 41.225. When you type in a domain name at the top of your computer screen, look at the bottom of your browser and you will see it searching for the IP address.

THE WEB AWAITS YOU

When you understand all the components of the Internet, this virtual land becomes a much more user-friendly place. Although this knowledge isn't necessary to surf the Net, those who take the time to learn will find that the Web becomes much less mysterious and a lot more fun. P

SCIENCE: FACT OR FICTION

(continued from page 30)

and others. E-Systems was subsequently bought out by Raytheon, one of the world's largest defense contractors.

Viktor Schauberger, one of Germany's most ingenious scientists was brought over during WWII to work with scientists at the National Atomic Research Laboratory, known today as the Brookhaven Labs, located in eastern Long Island, New York. By 1972, the Brookhaven scientists were fully immersed in the Montauk Project—understanding how the mind works, learning to control the mind, and in turn, using the mind to control time. Schauberger's patents, inventions, and ideas, were signed over to those working on the Montauk Project; and the U.S. military has incorporated them into different projects, one of which is HAARP.

With so much hidden activity and high-powered involvement, questions arise as to the final applications of this new technology and the hands that will operate it. More than a hundred years of ideas and work have been incorporated into HAARP, with the ability to indirectly trace it back as far as Tesla's Magnifying Transmitter and Aleister Crowley's interdimensional travel. P

THE PLAYERS AND CRITICS

The official home page for HAARP, *www.haarp.alaska.edu* is jointly managed by the U.S. military and the University of Alaska, Fairbanks. A typical site put out by the project managers, it boasts positive results and gives encouraging information. Text includes such topics as Data From the Site, Research Activity, and the Ionosphere.

For a site beaming information from the opposite side of the spectrum, visit *www.earthpulse.com* Providing articles entitled, "Vandalism in the Sky," "Ground Based Star Wars," and "Killing Politely," it also has information on related materials such as Nikola Tesla and flash points. Other Web sites can be found with more fuel for the conspiracy theories, along with information applauding or condemning HAARP.

Angel's Don't Play This HAARP: Advances In Tesla Technology is a book that gives information on the conspiracy and further connects the work of Nikola Tesla to the project. In the text, authors Jeane Manning and Dr. Nick Begich attempt to uncover the veil of secrecy enveloping the HAARP program.

Peter Moon is an author who has written a series of books on the Montauk Project, tracing it though time and into the present. His collaboration with people directly linked to Brookhaven and Montauk gives astonishing insight into the inner workings of the project, along with historical reference to others. The complete series is published by Sky Books, Box 769, Westbury, New York, 11590-0104.

www.americanradiohistory.com

SERVICE CLINIC

mailto: serviceclinic@gernsback.com

SAM GOLDWASSER

Electronic Flash Troubleshooting And Repair

Before opening **ANY** electronic flash or strobe, thoroughly read and follow all safety guidelines published in last month's Service Clinic or at my Web site, *www.repairfaq.org*. **DO NOT** attempt to implement or use the information contained in this article unless you are experienced in the construction and safety considerations that apply to high-voltage devices of this nature. Although all possible measures have been taken to ensure the accuracy of the information presented, Gernsback Publications Inc. is not liable for damages or injuries, misinterpretation of directions, or the misapplications of information.

This month we will deal with some of the common types of problems with electronic flash units and close with a case study where a partial transplant turned out to be the best solution for a dead flash.

Problems With Battery- Or AC-Adapter-Power

- Power source: dead or weak batteries or defective charging circuit, incorrect or bad AC adapter, worn power switch, or bad or corroded connections.

  Symptoms: Unit is totally dead, intermittent, or has excessively long cycle time.

  Test and/or replace batteries. Determine if batteries are being charged. Check for continuity of power switch or interlock, and inspect for corroded battery contacts and bad connections or cold solder joints on the circuit board.

- Power inverter: blown chopper transistor, bad transformer, or other defective components.

- Symptoms: Unit is totally dead or loads down power source when switched on (or at all times with some compact cameras). No high-pitched audible whine when charging the capacitor. Regulator failure may result in excess voltage on the flash tube and spontaneous triggering or failure of the energy-storage capacitor or other components.

  Test main chopper transistor for shorts and opens. This is the most likely failure. There is no easy way to test the transformer, and the other components rarely fail. Check for bad connections.

Problems With AC-Line-Power

WARNING: Line-powered units often do not include a power transformer. Therefore, none of the circuitry is isolated from the AC line. Read, understand, and follow the safety guidelines for working on line-powered equipment. Use an isolation transformer while troubleshooting. However, realize that this will **NOT** protect you from the charge on the large high-voltage power supply and energy-storage capacitors. Take all appropriate precautions.

- Power source: dead outlet or incorrect line voltage.

  Symptoms: Unit is totally dead, operates poorly, catches fire, or blows up. Spontaneous triggering may be the result of a regulator failure or running on a too high line voltage (if the unit survives).

  Test outlet with a lamp or circuit tester. Check line voltage setting on flash unit (if it is not too late!).

- Power supply: bad line cord or power switch, blown fuse, defective rectifiers or capacitors in voltage doubler, defective components, or bad connections.

  Symptoms: Unit is totally dead or a fuse blows. Excessive cycle time.

  Test fuse. If it is blown, check for shorted components like rectifiers and capacitors in the power supply. If the fuse is ok, test for continuity of line cord, power switch, and other input components and wiring. Check rectifiers for opens and the capacitors for opens or reduced value.

Common Problems

WARNING: The amount of charge contained in the energy-storage capacitor may be enough to kill—especially with larger AC-line-powered flash units and high-power studio equipment. Read and follow all safety guidelines with respect to high-voltage high-power equipment. Discharge the energy-storage capacitors fully and then measure to double check that they are totally flat before touching anything. Don't assume that triggering a flash does this for you (especially for automatic units). For added insurance, clip a wire across the capacitor terminals while doing any work inside the unit. Better to blow a fuse than you if you should forget to remove it.

- Energy-storage capacitor: dried up or shorted, leaky, or needs to be "reformed."

  Symptoms: Reduced light output and

www.americanradiohistory.com

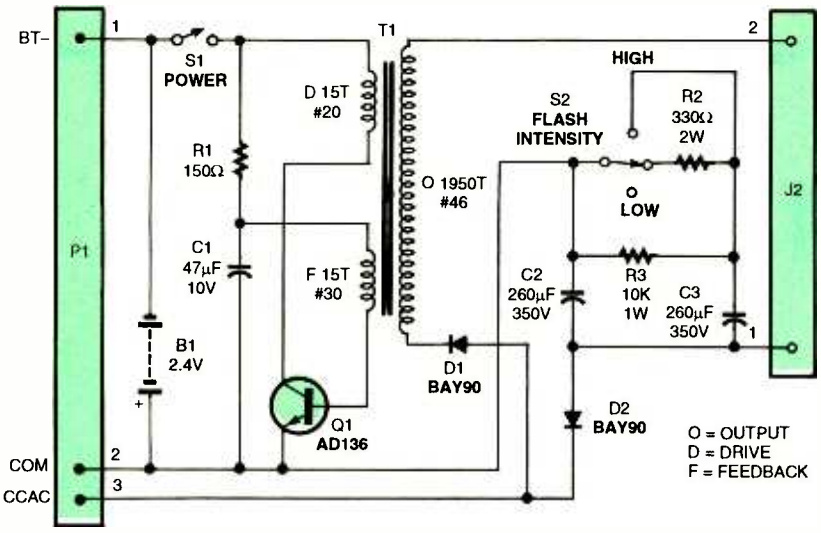

Fig. 1. This is a schematic representation of the Minox ME1 camera's inverter and energy-storage-capacitor circuit. Even a tiny camera, such as this one, can pack a wallop. Always take care when working near capacitors and transformers.

unusually short cycle time may indicate a dried-up capacitor. Heavy loading of power source with low frequency or weak audible whine may indicate a shorted capacitor. Excessively long cycle time may mean that the capacitor has too much leakage or needs to be reformed.

Test for shorts and value. Substitute another capacitor of similar or smaller μF rating and with at least equal voltage rating, if available.

Cycling the unit at full power several times should reform a capacitor that has deteriorated due to lack of use. If the flash intensity and cycle time do not return to normal after a dozen or so full intensity flashes, the capacitor may need to be replaced or there may be some other problem with the power supply.

- Trigger circuit: bad trigger capacitor, trigger transformer, SCR (if used), or other components.

Symptoms: Energy storage capacitor charges as indicated by the audible inverter whine changing frequency and increasing in pitch until ready light comes on (if it does), but pressing shutter release or manual test button has no effect. Spontaneous triggering may be a result of a component breaking down or an intermittent short circuit.

Test for voltage on the trigger capacitor and continuity of the trigger transformer windings. Confirm that the energy-storage capacitor is indeed fully charged with a voltmeter.

- Ready light: bad LED or neon bulb, resistor, zener, or bad connections.

Symptoms: Flash works normally, but either there's no indication from ready light, or ready light is on all the time or prematurely.

Test for voltage on the LED or neon bulb and work backwards to its voltage supply—either the trigger or energy-storage capacitor or inverter transformer. In the latter case (where load detection is used instead of simple voltage monitoring), there may be AC across the lamp so a DC measurement may be deceptive.

- Trigger initiator: shutter contacts or cable.

Symptoms: Manual test button will fire flash, but shutter release has no effect.

Test for shutter contact closure, clean hot shoe contacts (if relevant), inspect and test for bad connections, test or swap cable, clean shutter contacts (right, good luck). Try an alternate way of triggering the flash like a cable instead of the hot shoe.

- Xenon tube: broken or leaky.

Symptoms: Energy-storage and trigger capacitors charge to proper voltage, but the manual test button does not fire the flash even though you can hear the tick that indicates that the trigger circuit is discharging.

Some xenon tubes have "getters"—silver or dark silver coatings of a highly reactive metal, deposited on the inner surface of the flash tube at one end or sometimes both ends. Less frequently, a getter may be found on a metal surface such as one of the electrodes inside the tube, but not on the tubing inner surface. The getter "gets" any traces of air or water vapor in the flash tube. If a flash tube with a getter is broken or leaky, the getter will be corroded into a powdery gray-white form. If there is a getter and it is corroded badly, the flash tube is no good. Please note that unrelated glass discoloration or staining that resembles corroded getters can occur in a heavily used or moderately abused flash tube that still works.

Inspect the flash tube for physical damage. Substitute another similar or somewhat larger (but not smaller) flash tube. A neon bulb can be put across the trigger transformer output and ground to see if it flashes when you press the manual test button shutter release. This won't determine if the trigger voltage is high enough, but it will provide an indication that most of the trigger circuitry is operating.

Death By Storage

The unit may be totally dead or take so long to charge that you give up. For rechargeable units, try charging for the recommended time (24 hours if you don't know what it is). Then, check the battery voltage. If it does not indicate full charge (roughly 1.2 × n for NiCds, 2 × n for lead-acid where n is the number of cells), then the battery is likely expired and will need to be replaced.

Even for testing, don't just remove the bad rechargeable batteries—replace them. They may be required to provide filtering for the power supply even when running off the AC line or adapter.

For units with disposable batteries, of course, try a fresh set, but first thoroughly clean the battery contacts.

The energy-storage capacitor will tend to deform, resulting in high leakage and reduced capacity after long non-use.

www.americanradiohistory.com

However, you should still be able to hear the high-pitched whine of the inverter.

Where the unit shows no sign of life on batteries or AC, check for dirty switch contacts and bad internal connections. Electrolytic capacitors in the power supply and inverter may have deteriorated as well.

If the unit simply takes a long time to charge, cycling it a dozen times should restore an energy-storage capacitor that has deformed but is salvageable. This is probably safe for the energy-storage capacitor, as the power source is current limited. However, there is no way of telling if continuous operation with the excessive load of the leaky energy-storage capacitor will overheat power-supply or inverter components.

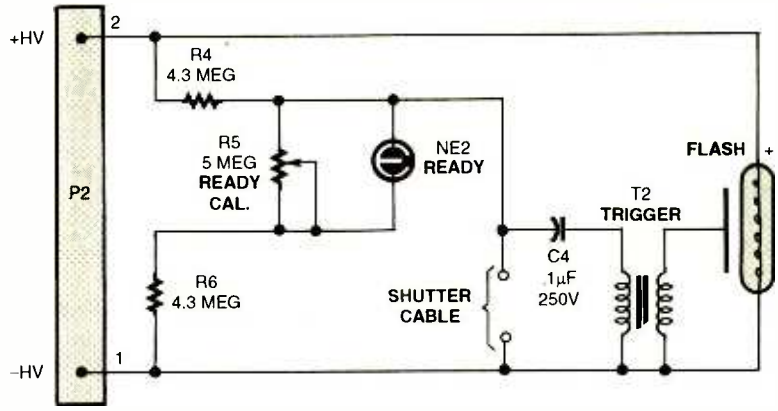

Fig. 2. Here is the schematic for the ME 1 trigger circuit. that activates the camera's flash. A 5-megohm variable resistor is used to calibrate the circuit.

Transformer Replacements

While not as common a problem as many people believe (the hardest to find part must be at fault, right?!), the transformers in electronic flashes do fail occasionally, probably due to faulty manufacturing—damaged fine wire in the secondary which eventually breaks or a shorted secondary from arcing through an insulation layer.

Line-voltage transformers: Most AC-line-powered flash units don't have any transformer so this isn't generally a problem. For those that do (higher speed or other special types of strobes), it shouldn't be difficult to match up the secondary voltage and find a standard replacement that will be acceptable. These may be cobbled together from the power transformers for vacuum-tube equipment (yes, they can still be found), small isolation transformers with multiple windings, and possibly the addition of some additional lower voltage windings in buck or boost phase to adjust the output voltage.

For safety reasons, I don't recommend attempting to repair transformers connected to the AC line, though this may be a possibility if all else fails.

Inverter transformers in battery-powered flash units: There is virtually no chance of successfully repairing any of these. The secondary winding uses wire so fine that it's almost impossible to even handle it. With a decent coil-winding machine, a new spool of #45 or so wire, proper insulating tape (these are wound in 10–20 separate layers), and a few days of patience, it can be done but doesn't rank up there on my "fun things to do list." Furthermore, it's almost certain the core got destroyed in attempts to get at the windings. Thus, replacement is the only viable option.

There is **NO** chance of getting one of these from an electronics distributor as they are all custom. Since it's almost a certainty that the original manufacturer will have little interest in selling you a new one, salvage from other flash units is the best hope. These can be $1 garage sale specials (other 35 mm, 126, or similar cameras), disposable camera flashes, or shoe-mounted units, depending on the physical size and energy (guide number) rating of your broken flash. The main problem will be the number of turns on the primary. If you can match those up by adding or removing turns to your replacement, there is a good chance it will work since they all seem to have roughly the same number of secondary turns (probably around 1600–2000). Even if the primary is buried, you can still add turns on top of the secondary in the appropriate direction to adjust the total net turns. Once it's running, adding or removing an additional turn or two may be needed to tweak the output voltage.

Another option is to transplant the entire inverter if one can be found that operates on the same input (battery) voltage. I've done this successfully without problems as described below.

Trigger transformers: Fortunately, these are fairly standard. Just match up the input voltage and select one that has an adequate output voltage for your strobe—4–5 kV for most small strobes should work. The only remaining thing that needs to be determined is the wiring polarity. While the strobe may work with either polarity of the trigger pulse, one may result in reliable operation. Electronics distributors like DigiKey and Mouser should have a suitable replacement, if a garage sale or disposable camera isn't handy.

Restoring A Minox ME1 For A Minox B Camera

This is a three-part unit for one of those teeny-tiny Minox spy cameras. I volunteered to attempt to repair it following pleas from the owner about its sentimental value. I was contacted about this rig via e-mail from someone named Stan and attempted to walk him through the diagnostic and repair process. With such an old device, any rechargeable battery was almost certainly dead, and any electrolytic capacitors would also be highly suspect.

Since the unit acts totally dead both from its battery as well as the AC adapter, I first suggested replacing the NiCd cells. Having accomplished this, and letting it charge overnight, there is now at least some quiet whining to indicate that the inverter is running. However, the ready light still does not come on even after several minutes (cycle time should be under 10 seconds). I next suggested that Stan should attempt to measure the voltage on the battery as well as the energy-storage capacitor to determine how far—if at all—it is charging. I warn Stan to take extreme care around the cap—those can be lethal!

The report isn't promising. On battery alone, the battery voltage is stable at 2.45 V_{DC} and the cap only charges to 48 V_{DC} or so; on AC to 170 V_{DC}. Even the latter is much less than the expected minimum of 300 V_{DC}. What is going on?

Since Stan noted that the capacitors retain their charge for hours, it is unlikely that they are bad—leaky—but just in case, I suggest just replacing them with

www.americanradiohistory.com

any sort of capacitor with similar µF rating and at least equal voltage rating (for testing only)—those from disposable cameras would be most appropriate and **FREE** if you know where to ask!

No change at all. At this point, Stan suggests that he is over his head on this one and is about to give up. So, I volunteer to look at the unit if he pays shipping both ways.

A Few Days Later....

The flash head itself is about as big as the entire camera with the power supply and charging adapter being somewhat larger. Actually, the power supply is a lot larger. I don't suppose spies generally like to use electronic flash in covert operations too often anyhow!

My first step is to reverse engineer the circuit. I don't expect anything particularly unusual, but this will make any troubleshooting a lot easier. See Fig. 1 for a schematic of the Minox's inverter and storage capacitor circuit.

The Flash Intensity switch, S2, selects between 12 watts and 24 watts. There are actually three positions. Apparently, you are supposed to pause in the middle one called "Hold 1 Sec" when switching between power levels for at least 1 second (surprise, surprise!) to allow the capacitor voltages to equalize! I would assume that the reason for this is to prevent damage to the switch contacts.

The flash head is separate from the power supply and appears to be very much like any of the other strobes. However, note the adjustment for the ready light!

I was not willing to completely disassemble this unit, so some of the actual components and wiring were guessed.

The wall adapter/charger provides both the current to charge the two-cell NiCd battery and a high-voltage AC output (CCAC) to power the flash when plugged into an outlet regardless of the state of the batteries. When operating from the wall adapter, D1 and D2 in the power supply unit, in conjunction with C4, form a voltage doubler that takes the 130 V_{AC} (>80 V peak) output of the adapter and produces over 300 V_{DC} to charge the energy-storage capacitors.

Some interesting features I was not aware of previously—which might have helped to narrow down the problem (and possibly give up—as you will see):

- It is a dual-energy flash—a switch selects between low- and high-power modes. There are two energy-storage capacitors. This really doesn't affect anything, but at least explains why Stan was referring to two large capacitors.

- The AC adapter generates the high voltage directly via a clever little voltage doubler in the power supply and its own isolated 130 V_{AC} transformer winding. This is significant. Having two basically independent means of powering the unit both be messed up implies a problem on the secondary side of the inverter, since there is nothing else in common.

Since the capacitors (and other sources of leakage) have been eliminated, on a wild guess, I decide to replace the high-voltage rectifiers. They are marked "BAY90" which crosses to 1000 volts, 2.5 amps (probably less but that is what my ECG book says). Replacing with suitable diodes and...no change at all.

There is only one other thing that can prevent the capacitors from charging from the AC adapter—an open inverter transformer secondary. This would not be fun. Indeed, all efforts to check its resistance failed. The transformer is bad. Can it be repaired? I don't think so—not unless the break is at the end of the winding on the outside. No such luck. In fact, after unwinding all 1950 turns of #46 wire, I never did find it—probably one of the 50 or so times I thought I broke this super fine wire in the process, it was already broken. No way to get that back together anyhow and the ferrite core was in several pieces as well.

Go To Plan B...

I tell Stan to see if he can locate another similar unit at auction or elsewhere to use for parts—even if it doesn't work. Within a half hour, he replies that an eBay on-line auction lists an identical model—with the identical symptoms—and it was still available at $37. No way I said, it may have the same problem as well and thus not be repairable! (That unit finally sold for $83—Yikes!—and it could be a dud.)

I Volunteer To Perform A Transplant...

There is nothing particularly unusual about the requirements—charge some large caps to around 300 V_{DC}. Any vanilla flavored pocket camera needs to basically do this. However, just any unit would not necessarily work.

- It runs on a pair of NiCd cells totaling 2.4 volts, so the circuitry out of a disposable camera is not appropriate, as it's designed for 1.5-volt operation.

- The inverter may need to run continuously. For this reason as well, the disposable camera solution is unacceptable since they usually are activated by a push button and may only be designed for short duty cycle operation.

- AC operation must not be affected.

- The circuitry must fit in the case.

Checking the schematics for the flash units from typical disposable and pocket cameras, the one found in the Keystone pocket camera might work if it could accommodate the 2.4-volt NiCd rather than 3.0-volt alkaline battery it expects. This is often the case, since alkaline voltage is not really constant at 3.0 volts, but drops gradually as they are used up (NiCd voltage is nearly constant until the charge is exhausted). Therefore, it probably should work down to about 2.0 volts (but with longer cycle time). The lower effective series resistance of NiCds would partially offset the lower initial voltage. I have a couple of the Keystone units, so it is easy to try. Figure 2 shows the trigger circuit for the camera's flash.

A simple test jumpering four wires confirmed functionality. The actual inverter portion of the Keystone flash occupies a volume of about 1 × 1¼ × ¼ inches, or just slightly more than that of the original dead inverter transformer! Some quick action with a hacksaw and nibbling tool resulted in a cute little circuit board that could be tucked into the available space. Some electrical tape assured that there would be no nasty short circuits. The chopper transistor was left exposed, so any heat from it would have somewhere to go.

The excised circuit was attached to the positive terminal of the battery, the negative (center) at the switch, and the two secondary leads of the inverter transformer, taking care to get the polarities correct (the waveform out of the inverter is asymmetric and it would not work well if reversed). Except for T1 (dead) and C2 which I removed, all

www.americanradiohistory.com

other components were left in place since they shouldn't affect anything.

It seems to work fine on both power settings and on battery or AC. The voltage on the energy-storage capacitors stabilizes at about 315 to 325 V_{DC} in all cases. The battery charges fine. What more can you ask?

At first, I thought there was one slight problem: When plugged into an AC outlet with the power switch in the on position (meaning the inverter is also running —the flash operates from AC with this switch off), I was afraid the voltage will eventually climb beyond the safe limits of the capacitors. Then, about 3 AM the next morning I realized there was a missing plastic piece that Stan had not sent me to prevent the switch from being moved into the on position with the adapter plugged in (or vice-versa).

Wrap-Up

Well, now you have no excuse not to go dig out all those dead flash units and restore them to fully operational condition. Much more information on flash technology and repair can be found on my Web site, *www.repairfaq.org*, under: "Notes on the Troubleshooting and Repair of Electronic Flash Units and Strobe Lights." Even more xenon strobe stuff can be found at Don Klipstein's Strobe page: *http://www.misty.com/people/don/donflash.html*. As always, I will be happy to reply to questions or comments via e-mail to sam@repairfaq.org. (Sorry, I cannot answer snail mail.) See you next time. P

Great consumer information is a shoe-in with our free Catalog. Call toll-free 1 (888) 8-PUEBLO or go to www.pueblo.gsa.gov.

Electronic Projects 1.0

By Max Horsey

A series of ten projects to build along with audiovisual information to support hobbiests during construction. Each project is complete with schematic diagrams, circuit and PCB layout files, component lists and comprehensive text to guide the hobbyist through the project. A shareware version of CADPACK—schematic capture and PCB design software is also provided. Projects include a reaction timer, logic probe, egg timer and seven more. Get your own copy of this CD-ROM today. **$75 including shipping in the U.S.** Order from CLAGGK Inc., P.O. Box 12162, Hauppauge, NY 11788. Visa, MC, Discover, OK.

CLX2

Books that Bridge Theory & Practice

Many electronics enthusiasts discovered that the bridge from classroom theory books to hands-on project building is difficult to span at times without a handy pocket guide. Even the equipment manual to operate a gadget often makes things murkier rather than clearer. A compact text authored by a seasoned expert with hands-on knowledge and a knack of writing in an easy-to-understand style is many times more valuable than the price of ponderous theory and equipment manuals or the parts for a project that could be damaged. Here's a sampler of some titles you may want to own!

ELECTRONIC HOBBYIST DATA BOOK—The info you need to transport you from the schematic diagram to project parts. Pin-outs, color codes, truth tables, parts parameters, etc. **Order BP396- $10.99 Includes S & H**

PRACTICAL INTRODUCTION TO SURFACE MOUNT DEVICES—A technology that spun off the automated assembly line into the grasp of experimenters and project builders. **Order BP411- $9.99 Includes S & H**

THE PRE-COMPUTER BOOK—Aimed at the absolute beginner with little or no knowledge of computing. A non-technical discussion of computer bits and pieces and programming. **Order BP115- $2.99 Plus $2.00 S & H**

PRACTICAL OSCILLATOR CIRCUITS—If your budding project requires an oscillator, you can design it and build it from the many types described here in a hobbyist-friendly style. **Order BP393- $9.99 Includes S & H**

PRACTICAL PIC MICROCONTROLLER PROJECTS—This book covers a wide range of PIC based projects. In most cases the circuits are very simple and they are easily constructed. **Order BP444- $7.99 Includes S & H**

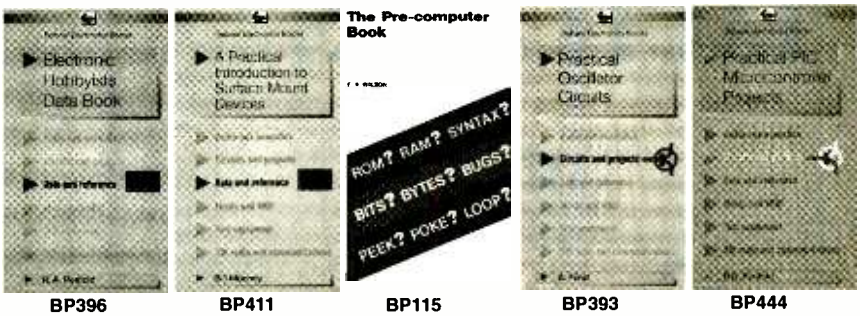

BP396 BP411 BP115 BP393 BP444

Electronics Technology Today Inc.
P.O. Box 240
Massapequa, NY 11762-0240

Number of books ordered ☐

Amount enclosed $ _____

Please send me the following book(s) that I checked:

- ☐ BP396 - Electronic Hobbyist Data Book—$10.99
- ☐ BP411 - Practical Introduction to Surface Mount Devices—$9.99
- ☐ BP115 - The Pre-Computer Book—$2.99 + $2.00 S & H
- ☐ BP393 - Practical Oscillator Circuits—$9.99
- ☐ BP444 - Practical PIC Microcontroller Projects —$7.99

Most above prices include shipping and handling

ET05

Name/Company _____

Address _____ Apt. _____

City _____ State _____ Zip _____

Sorry, no orders accepted outside the USA and Canada. All paynents must be in US funds! NY state residents must include local sales tax. Allow 6-8 weeks for delivery.

www.americanradiohistory.com

PEAK COMPUTING

(continued from page 26

digital video interface that some flat-panel LCD displays use), as well as an S-Video output. Hercules even includes a copy of PowerDVD for playing DVD discs (if your PC has a DVD drive.)

If you're an avid game player, looking for a game-oriented upgrade but not yet ready to spring for the GeForce3, take a close look at the Hercules 3D Prophet Ultra.

IT'S IN THERE

The third member of our trio is from ATI Technologies and uses that vendor's newest RADEON chipset. The RADEON is very similar in features and performance to Nvidia's GeForce2 chipset, and the RADEON ALL-IN-WONDER fell somewhat between the MX and Ultra-based cards in much of our formal testing, though with 32 MB of fast DDR RAM, it provided excellent game play on real-world games.

Where the $299 card really shines, however, is in the video features it provides. The name that ATI uses—ALL-IN-WONDER—is appropriate. For starters, the card provides a multitude of video inputs and outputs, including S-Video and composite, as well as video capture and audio I/Os. All of these are available on an extension cable as well, so you don't have to hunt around on your PC's rear panel to make use of the card's features. A standard DB-15 VGA is not offered. Instead, an adapter is included that connects to the DVI jack to provide analog output to a standard monitor. This works just fine.

Also central to the card is a cable-ready TV tuner. Attach an external antenna or connect it to your cable outlet, and you are ready to surf through any unscrambled channels on your cable system. The software that is included with the ALL-IN-WONDER really lets you get use out of the card's features. This bundle includes an interactive program guide that you can update weekly over the Internet, and automatic recording software that turns the ALL-IN-WONDER into a personal digital recorder. There's also software to perform video capture and editing, as well as a copy of ATI's DVD Player.

PLENTY TO CHOOSE FROM

If none of the above cards strike your fancy, there are plenty of others to choose from. Nvidia-based cards are available from other vendors including ELSA, VisionTek, and Creative Labs. Matrox has cards with its own chipset, and ATI offers more basic cards, including the RADEON VE. Whatever your budget constraints, you are sure to find a choice that will let you enjoy many of the benefits this newest generation of video cards has to offer. P

SEE WHAT TAKES SHAPE. EXERCISE.

American Heart Association

© 1992, American Heart Association

FACTCARDS

Jampacked with information at your fingertips

■ ALL YOU NEED to know about electronics from transistor packaging to substitution and replacement guides. FACTCARDS numbers 34 through 66 are now available. These beautifully-printed cards measure a full three-by-five inches and are printed in two colors. They cover a wide range of subjects from Triac circuit/replacement guides to flip-flops, Schmitt triggers, Thyristor circuits, Opto-Isolator/Coupler selection and replacement. All are clearly explained with typical circuit applications.

■ WANT TO EXPAND your knowledge of electronics? Do it the easy way by studying the Electronics Fact Cards. Do you travel to and from your job each day? Drop a handful of cards in your pocket before you leave, and the bus becomes a schoolroom! At home, you can build some of the projects and not only have fun building and using them, but learn how they work at the same time.

■ YOU'LL BE AMAZED both at how rapidly you learn with these cards, and how easy it is to understand. These new cards are available right now. Don't miss out. Send your check or money order today.

FACTCARDS—Facts at your fingertips for Experimenters and Project Builders!

Please send one copy of FACTCARDS $1.99. Shipping $2.00 (U.S. and Canada only).

| | Please send _____ copies of FACTCARDS. Total cost is sum of copy price and First Class postage and handling cost multiplied by number of card sets ordered.

New York residents add sales tax to total cost of each order.

Please print

Allow 6-8 weeks for the material to arrive.

_____ (Name)

_____ (Street Address)

_____ (City) (State) (Zip)

Detach and mail today:
CLAGGK Inc.
P.O. Box 12162
Hauppauge, NY 11788

All Payment must be in U.S. Funds!

BS168

www.americanradiohistory.com

BASIC CIRCUITRY

mailto: basiccircuitry@gernsback.com

CHARLES D. RAKES

TEST DRIVE YOUR BATTERIES

If it's electronic or electrical and portable, it requires batteries! What batteries are the most economical and the best choice for a particular application? If we go by what the battery manufacturers tells us in their advertisements, we would be convinced that all makes are equal and any make would be just fine. Not entirely so! The most popular disposable batteries used in electronic devices are alkaline. Two players in the battery manufacturing game produce the majority of the disposable batteries consumed in the U.S. However, new batteries are showing up daily from across the pond with all kinds of life and quality claims. Prices vary all over the place with some much cheaper than the top U.S. brands and others at, or near, the same cost. How can we intelligently take advantage of a less expensive battery and know that it is truly equal to, or better than, one of the top dogs? Easy, we'll life test batteries from several producers and compare the results to determine just what is the best battery for the money.

How Do We Do That?

That's an easy task. Place a fixed resistive load on the battery and monitor the voltage until it drops to about 60% of its initial voltage. Beyond this point, very little life remains in an alkaline battery.

The most popular size of battery in use today is the AA cell. One widely used electronic item is the digital camera, which has a healthy appetite for battery power. I know from personal experience that my digital camera would break me if it were not for rechargeable batteries. With luck, I get through 20–30 shots on a new set of four AA batteries. If I'm limited to using disposable batteries, I certainly want to use the brand that offers the most amp-hours per dollar.

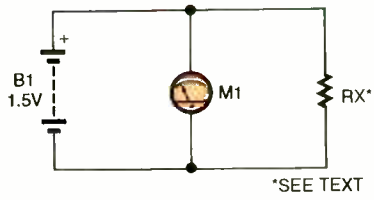

Fig. 1. This schematic shows how a load test is performed on a battery. Here, a 1.5-ohm resistor acts as the load.

PARTS LIST FOR THE BASIC DISCHARGE CIRCUIT (FIG. 1)

Test battery, voltmeter, load resistors

Load testing a battery will give a good indication of its true value for a given application. Batteries used to supply power for high current demand applications like flashlights, digital cameras, and other current-hungry devices should be load tested at or near their operating current level. The actual operating current level can be checked and matched with a fixed resistive load; however, in many applications this is not easy.

A good average resistive load for AA batteries in high current applications is a 1.5-ohm, 5-watt resistor. (See Fig. 1.) This load can be a single 1.5-ohm resistor or ten 15-ohm, ½-watt resistors in parallel. For less power-hungry applications, a 10-ohm resistor will do for comparing one brand to another. Lighter load applications may be tested with a resistive load near the value offered by the battery-operated device.

The resistor value is easy to determine. Measure the operating current and plug the value into Ohm's law formula—E/I. The resistor's power requirement is determined by multiplying E × I. However, for the majority of battery comparisons, the 1.5-ohm and the 10-ohm loads will give the raw data necessary to determine which battery to use in a given application.

Keeping Track Of Time

Loading the battery is the easy part of the process; however, keeping track of the voltage versus time can be a real problem. A voltmeter, digital preferred, connected across the battery will indicate the voltage, but it will not give out

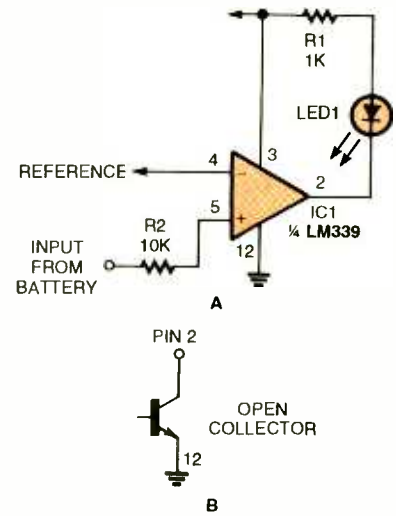

Fig. 2. Figure A shows a basic circuit using the 339 quad-comparator, which contains four independent voltage comparators. Figure B shows an open collector NPN transistor—this is what lies at the output of each comparator.

PARTS LIST FOR THE BASIC 339 COMPARATOR CIRCUIT (FIG. 2)

IC1—LM339 quad comparator IC
R1—1000-ohm, ¼-watt, 5% resistor
R2—10,000-ohm, ¼-watt, 5% resistor
LED1— Light-emitting diode, any color or size

www.americanradiohistory.com

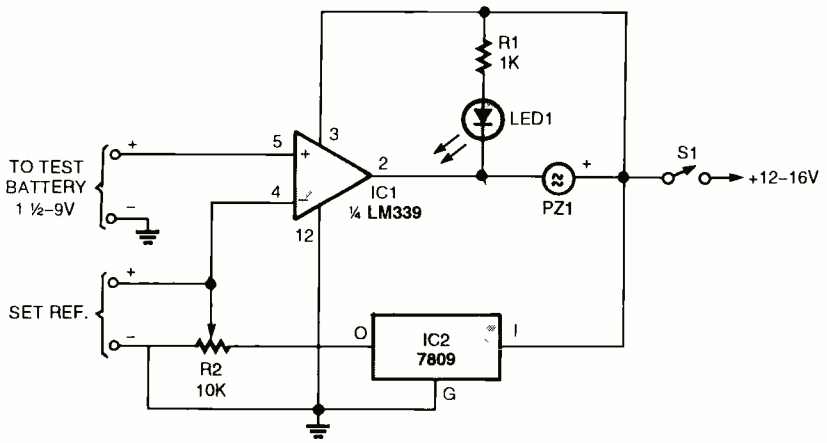

Fig. 3. This battery-monitoring circuit incorporates a piezo buzzer that beeps as the LED lights in order to alert the user that the voltage has dropped below a pre-set reference.

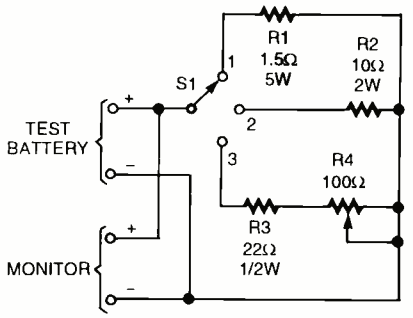

Fig. 4. This schematic shows a load box that can be used to test batteries at different load currents. A three-position switch is used to choose from 1-, .15-, and .068–.0123-amps.

PARTS LIST FOR THE SINGLE BATTERY MONITOR (FIG. 3)

SEMICONDUCTORS

IC1—LM339 quad comparator IC
IC2—7809 9-volt regulator IC
LED1—Light-emitting diode, any color or size

ADDITIONAL PARTS MATERIALS

R1—1000-ohm, ¼-watt, 5% resistor
R2—10,000-ohm potentiometer
S1—SPST toggle switch
PZ1—Piezo sounder, RadioShack part #273-065 or 273-078, or any similar type

an alert when the critical discharge voltage occurs.

Even while life testing batteries at the high current-discharge level, it can take over an hour to reach the critical discharge voltage. Keeping a constant watch on a voltmeter(s) for an hour is not easy, especially if an hour of constant attention is just not possible. Here's where our electronic hobby gives us a leg up on everyone else—we can design and build our own voltage monitor.

We'll Do It This Way

The 339 quad comparator is a very handy little IC that's inexpensive, widely available, user friendly, and just what we need for our voltage-monitoring job. Inside the 339 IC are four independent voltage comparators, which are designed to operate from a single power supply. The output of each comparator, see Fig. 2B, is an open collector NPN transistor. A simplified comparator circuit is shown in Fig. 2A, with the negative input connecting to a reference voltage and the positive input tied to the battery under test.

Here's how the comparator circuit in Fig. 2A operates as a voltage monitor. As long as the voltage at pin #5 is more positive than the reference voltage at pin #4, the LED will remain dark. When the battery voltage has barely fallen below the reference voltage, the LED turns on indicating the critical discharge voltage has just occurred. Now, are we to watch an LED in place of a meter? NO! NO! This is only the **BASIC** circuit that will be used in our full-blown monitor circuit—have some patience, please.

A Single Battery Monitor

A single battery monitoring circuit is shown in Fig. 3. A single comparator is used to monitor the battery voltage, just as in our previous circuit, with the addition of a regulated reference voltage source and an audible alert sounder. R2 sets the discharge reference voltage, which is kept constant by the 7809 voltage regulator IC. The LED and the piezo sounder remain off until the test battery voltage drops below the pre-set reference voltage. At that time, the LED and sounder turn on.

Comparing two different brands of batteries at a time can be easily accomplished by doubling the circuit in Fig. 3, with the following exceptions. The reference pot, R2, and the 7809 regulator IC need not be added for the second monitor circuit. Connect the negative input of the second comparator to pin #4 of the comparator in Fig. 3. **CAUTION!** Connect all unused 339 inputs to ground. If they're left unattached, bad things can happen to your circuit.

PARTS LIST FOR THE BATTERY LOAD BOX (FIG. 4)

R1—1.5-ohm, 5-watt resistor
R2—10-ohm, 2-watt resistor
R3—22-ohm, ½-watt resistor
R4—100-ohm potentiometer
S1—Three-position single-pole selector switch, 15-amp type
Battery terminals, enclosure, etc.

A load box, see Fig. 4, can make it easier for life testing batteries at different load currents. Three different switch positions allow for load currents of 1-amp, .15-amp, and .068–.0123 amps. The actual resistor values may be selected for special testing currents or load applications. It is very important to keep the internal resistance of the load box as low as possible. Use large wire (#16) and pick a selector switch that is a high-current (15-amp), low-loss type. Two load boxes are required when using the dual comparator circuit.

Why not use all four of the comparators in the 339 and build a quad battery life tester? Why not, indeed? Take a gander at the circuit in Fig. 5 and that's what you will see. Granted, with all of the battery brands available, there is no reason not to investigate as many as we can and become better educated on what is the best battery buy.

Each of the positive inputs of the 339 comparator connects to a battery under discharge testing. The reference voltage is set for all batteries for the same discharge voltage level with R5. Testing four batteries also takes four load boxes or load resistors. Always be sure that the electrical connections to the battery are solid and without ohmage loss. Invest in good metal battery holders, and if necessary apply light pressure at the terminal

www.americanradiohistory.com

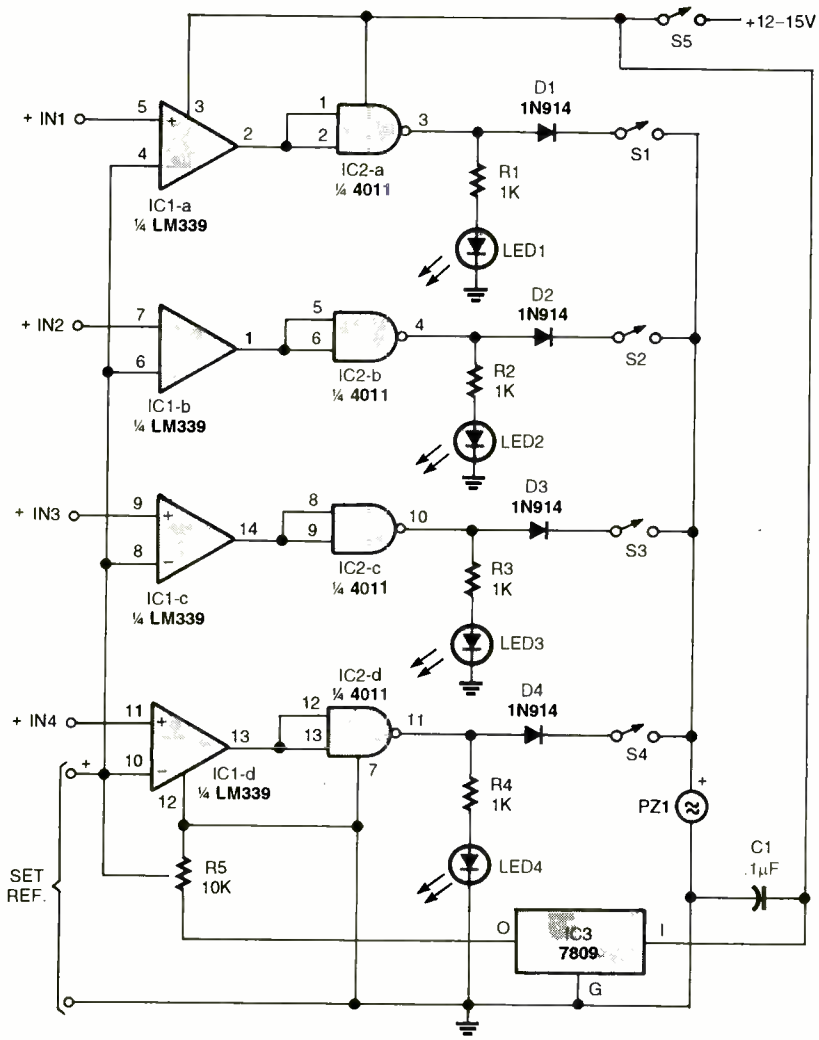

Fig. 5. This is a quad-monitoring circuit that also uses the 339 IC. Four separate batteries can be tested at once. Each battery has its own switch to control testing.

ends with a heavy-duty rubber band. It's an easy task to check for resistive losses by connecting a digital voltmeter, set on the lowest voltage range, across the battery to terminal junction and across the closed switch contacts on the load box while the circuit is in the discharge state.

If more than a few millivolts are present across any of the contact junctions, check the connections and be sure they are clean and solid. Any large error here can make one battery look much better than it actually is and give it a false edge over the other batteries.

Quad Tester

Now, let's take a closer look at the quad-monitoring circuit in Fig. 5 and see how it operates. As previously stated, the 339's positive inputs go to the positive terminals on the test batteries. The negative terminal of each test battery goes to circuit ground. The output of each comparator is connected to the input of a NAND gate, which inverts the low output signal to a high. This high output turns on the LED and sends a positive output voltage through a 1N914 diode to an on/off switch. On the other side of each of the on/off switches is a piezo sounder that gives out an audible tone when any one of the batteries drops below the pre-set lower voltage limit. The pooped-out battery can be identified by which LED is on and that corresponding switch can be turned off, silencing the sounder until the next battery failure occurs.

The electronic testing equipment is just a part of what is needed to come to a sound decision on which battery is the best value. Keeping accurate track of the discharge time of each battery is a must for a meaningful outcome. Also if a no-name, low cost, battery does exceptionally well in the life test, then repeat the test. If the results are similar, go buy the batteries and take advantage of your electronic expertise.

Next visit we're going to look at life testing other types and sizes of batteries. Also, we'll have a pulse-timing discharge circuit for expended life testing. So tune in again next month same station for the continuing battery saga. P

PARTS LIST FOR THE QUAD BATTERY MONITOR (FIG. 5)

SEMICONDUCTORS

IC1—LM339 quad comparator IC
IC2—4011CMOS quad NAND gate IC
IC3—7809 regulator IC
LED1–LED4—Light-emitting diode, any color or size
D1–D4—1N914 silicon diode

ADDITIONAL PARTS AND MATERIALS

R1–R4—1000-ohm, ¼-watt, 5% resistor
R5—10,000-ohm potentiometer
C1—.1-µF, ceramic disc capacitor
S1–S5–SPST on/off switch
PZ1—Piezo sounder type, same type as used in Fig. 3

Get your copy of the CRYSTAL SET HANDBOOK

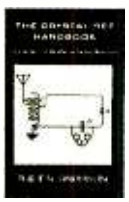

Go back to antiquity and build the radios that your grandfather built. Build the "Quaker Oats" type rig, wind coils that work and make it look like the 1920's! Only **$10.95** plus **$4.00** for shipping and handling. **Claggk Inc., PO Box 12162, Hauppauge, NY 11788.** USA Funds ONLY! USA and Canada — no foreign orders. Allow 6-8 weeks for delivery. MA01

Introducing Robotics with Lego® Mindstorms™

For Robot Lovers. Shows how to build a variety of increasingly sophisticated computer-controlled robots using the brilliant Lego mindstorms Robotic Invention System (RIS). Covers the fundamental building techniques needed to construct strong and efficient robots. Explains to the reader how robot control programs may be simply constructed on their PC screens. Detailed building instructions are provided for all the robots featured. 270 pages, 71/2 x 10 5/7 in. **$19.99.** Plus $2.45 shipping in U.S. Order from CLAGGK Inc., P.O. Box 12162, Hauppauge, NY 11788 **CLX1**

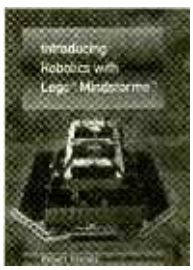

www.americanradiohistory.com

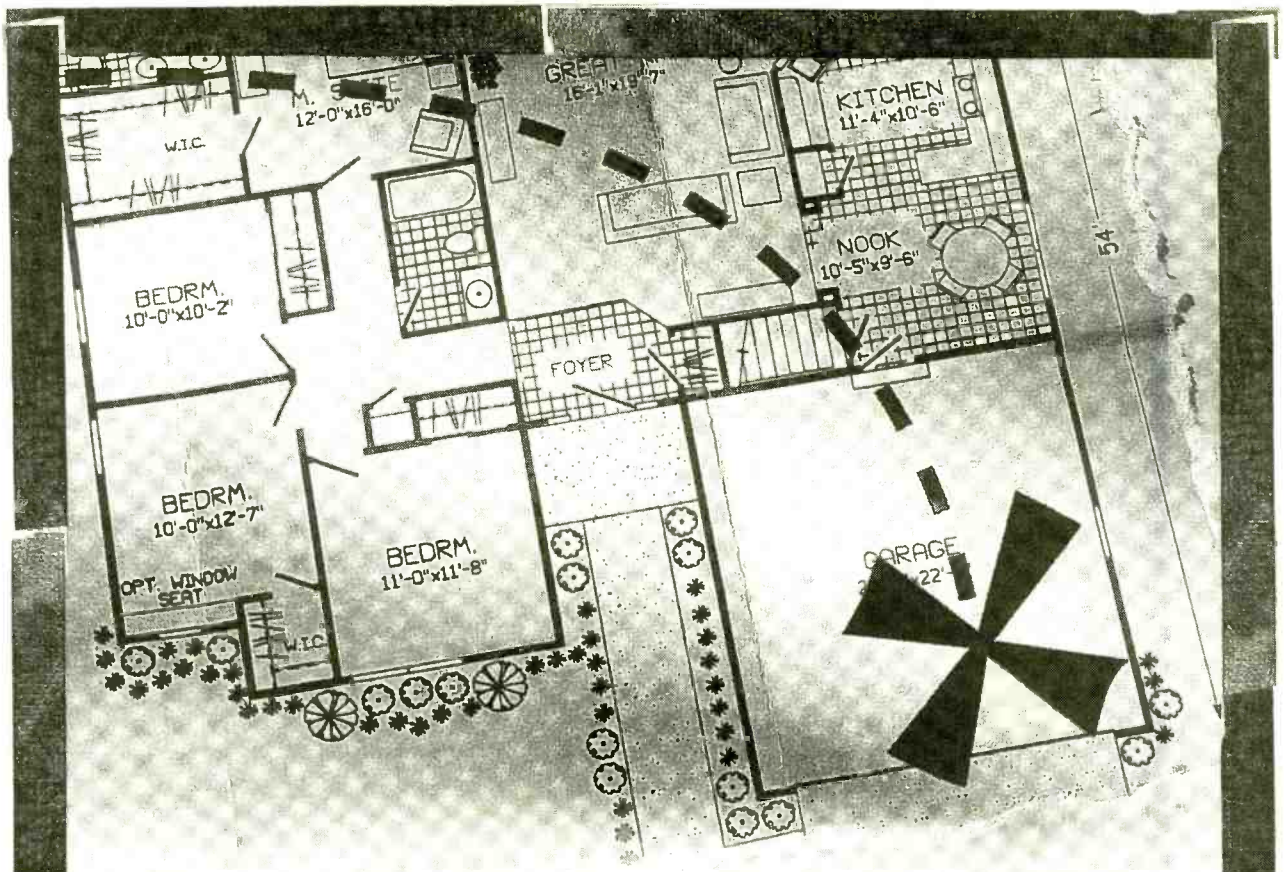

THIS IS NOT THE FLOOR PLAN OF A HOUSE.

IT'S A TREASURE MAP.

Your home could be hiding some valuable treasure. More than 40 years ago, Grandma gave you a nice bundle of Series E Savings Bonds. So you put them in a safe place and forgot about them. But they're still around somewhere, waiting for you to rediscover them. And even though your old Series E Bonds are no longer earning interest*, they could still be worth more than **5 times their face value**. So why not put your money back to work? Redeem those old bonds for cash, or if they qualify, exchange them for Series HH Savings Bonds at your local financial institution. To find out more, call 1-800-4US BOND, or write to Savings Bonds, Parkersburg, WV 26106-1328 and ask for a current values chart. Begin searching your memory, then start searching your house. Because old Savings Bonds are a treasure worth digging for.

Do you have old Savings Bonds? Check out the Savings Bond Calculator at www.savingsbonds.gov to discover their value.

Creating a New Century of Savings

U.S. SAVINGS BONDS

* Pre-December 1965 Series E Savings Bonds stop earning interest at 40 years, and those purchased after November 1965 stop at 30 years.

A public service of this publication

www.americanradiohistory.com

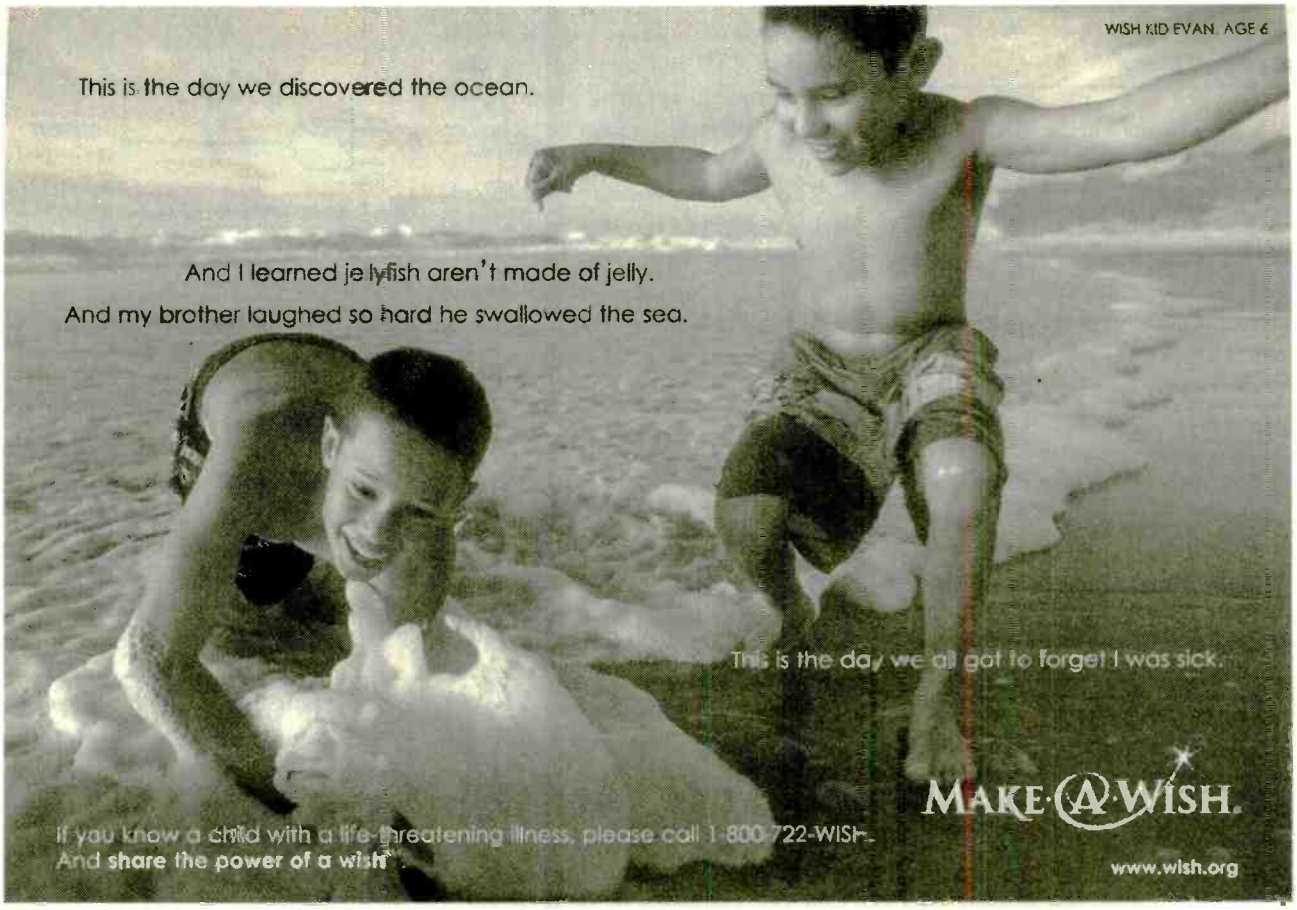

NOW Find the Right Part for Your VCR!

The 172-page Eighth Edition of the VCR Cross Reference contains both model and part number cross references. Over 7,810 new parts and 1927 new models have been added.

VCR's are made in a few factories from which hundreds of different brand names and model numbers identify cosmetically-changed identical and near-identical manufactured units. Interchangeable parts are very common. An exact replacement part may be available only a few minutes away from you even though the original brand-name supplier is out of stock. Also, you may be able to cannibalize scrap units at no cost.

with the ISCET VCR CROSS REFERENCE

NEW! The Seventh Edition is contained on a 3½ diskette for IBM PC AT/XT compatibles, DOS 2.1 or higher. The disk software allows technicians to search by manufacturer for model numbers and description of part numbers. A parts editing sequence gives an on-screen view of all substitutes for parts entered. With the diskette, the technician can update files by adding model and parts crosses of future models. The Eighth Edition can be printed on pages completely from the diskette.

The ISCET VCR Cross Reference, Seventh Edition, is on 8½ × 11-in., pre-punched pages and sells for **$24.95**. The 3½ inch diskette sells for **$69.95** and you can view listings from a monitor or printed page.

ONLY $24.95 for pages
$69.95 diskette
Not including Shipping & Handling

Claggk Inc.
VCR CROSS REFERENCE OFFER
P.O. Box 12162
Hauppauge, New York 11788

Name _____
Business _____
Address _____
City _____
State _____ Zip _____
Phone _____

Enclosed **$24.95** for the ISCET VCR Cross Reference, Eighth Edition.

Enclosed **$69.95** for the Idiskette containing the ISCET VCR Cross Reference, Ver. 7.0

Include $5.00 for shipping Version 8 pages within the United States. All other countries add $6.00 (surface mail).

Include $3.00 for shipping Version 7 disk within the United States. All other countries add $4.00 (surface mail).

The total amount of my order is $ _____.
Check enclosed—do not send cash. US funds only.
☐ Visa ☐ MasterCard Exp. Date ___/___/___

Card No. _____

Signature _____

New York State residents must add applicable local sales tax to total. CB03

www.americanradiohistory.com

Q&A

(continued from page 46)

TTL +5 volts for the external power connection. If using a resistor as the pull-up device and connecting it to another voltage as shown in Fig. 7, you can have an effective logic translator from TTL to some other logic system, as long as that system has zero volts as its logical LOW.

You cannot connect totem pole outputs together, for they would fight over control of the output if one wanted to go HIGH and the other wanted to go LOW. OC outputs can be connected together with no problem at all, and this is the normal way that you'd connect the OC outputs of multiple 7489 RAM (random-access memory) chips. If any one of the transistors is turned on, the output will go LOW and none of the other devices can do anything about it. All connected transistors must be off before the output will go HIGH.

The main disadvantage of open collector logic is that it is slow compared to a totem pole output. OC logic has a much lower frequency of operation and slower switching speeds than the totem pole version of the same logic.

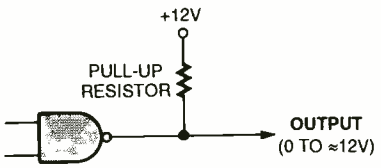

Fig. 7. Logic levels can be shifted to CMOS levels for automotive applications using an "open-collector" output and a pull-up resistor.

Writing to Q&A

As always, we welcome your questions. Please be sure to include:

(1) plenty of background material,

(2) your full name and address on the letter (not just the envelope),

(3) and a complete diagram, if asking about a circuit; and

(4) type your letter or write neatly.

Send questions to Q&A, **Poptronics**, 275-G Marcus Blvd., Hauppauge, NY 11788 or to *q&a@gernsback.com*, but do not expect an immediate reply in these pages (because of our backlog). We regret that we cannot give personal replies. Please no graphics files larger than 100K. P

AMAZING SCIENCE

(continued from page 50)

double-sided tape. The multi-directional wheel is secured inside the U-Bracket using a small 2.25-inch piece of ¼–20 threaded rod and two machine screw nuts.

With the motors and the multidirectional wheel mounted, we are ready for the electronics. I drilled a ¼-inch hole in the aluminum plate to allow wires from the gearbox motors underneath the robot to be brought topside. The schematic for the electronic circuit is shown in Fig. 9. I built the circuit on two small prototyping boards. You can do the same or solder the components to a PC board.

CdS Cells

Two critical components used in this circuit are the CdS photoresistor cells. The CdS cells I used in this prototype have a dark resistance close to two megohms. In low light the resistance is approximately 50K ohms. As the light intensity increases, the resistance of the CdS cell continues to decrease till it reaches light saturation at around 500 ohms.

If possible, one should measure the resistance of a few CdS cells and select two that are closest matched.

PIC 16F84 Microcontroller

The 16F84 microcontroller used in this robot simulates two neurons. Each neuron's input is connected to a CdS cell. The output of each neuron activates one gearbox motor.

In the program I put in a fudge factor, or range, so that the two CdS cells can deviate from one another in resistance readings and still be considered equal. If the robot doesn't travel straight ahead when the two CdS cells are equally illuminated, you can increase the range until it does.

Testing

For power I used four "D" cell batteries. I left the full length of the leads on the CdS cells. I pointed one CdS cell to the left and the other to the right. To test the robot's function I used a flashlight. I was able to steer the mobile platform around by shining the flashlight on the CdS cells.

Avoidance Behavior

The way the robot is wired it is attracted to and steers toward a bright light source. You can reverse the wiring going to the gearboxes and create the opposite behavior. P

IT'S NOT WORTH THE WEIGHT.

For better health and fitness, exercise.

American Heart Association

© 1992, American Heart Association

www.americanradiohistory.com

SUPPLEMENT TO POPTRONICS OCTOBER 2001

Poptronics® SHOPPER®

Paperback Books

GREAT BOOKS AT BUDGET PRICES

☐ **100 RADIO HOOKUPS –#7–$3.00**

First published in May, 1923 this popular booklet went into reprint editions nine times. It is packed with circuits, theory, antenna installation and tips on consumer radio receivers that were popular in the early 1920's. Antique radio buffs and those inquisitive about the early days of radio will find this booklet an exciting, invaluable and excellent reference into the minds of early-day radio listeners. Sorry, we cannot honor the original 25-cent cover price.

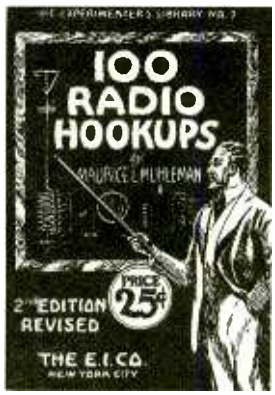

☐ **GUIDE TO THE WORLD'S RADIO STATIONS –BP355–$7.99**

An easy-to-read guide for the casual listener and top notch QSL getter! The Guide is an essential reference work designed to steer the listener around the ever more complex radio bands. Listings cover world-wide shortwave stations with a special emphasis on international broadcasts in English. Medium and long-wave listings are also included for the US, Canada, European, Middle and Near East, and North Africa regions.

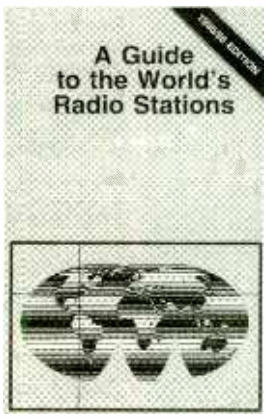

☐ **PRACTICAL ELECTRONIC MODEL RAILWAY PROJECTS –BP364–$6.99**

Provides a number of useful but reasonably simple projects that include a constant voltage controller, automatic signals, steam whistle sound effect, two-tone horn sound effect, automatic chuffer, and a full chapter that covers how to use a computer to control a model railway layout, including controllers and signaling systems. Helps make your model railway a state-of-the-art system.

☐ **WIRELESS & ELECTRICAL CYCLOPEDIA –ETT1–$4.99**

A slice of history. This early electronics catalog was issued in 1918. It consists of 176 pages that document the early history of electricity, radio and electronics. It was the "bible" of the electrical experimenter of the period. Take a look at history and see how far we have come. And by the way, don't try to order any of the radio parts and receivers shown, it's very unlikely that it will be available.

ELECTRONIC TECHNOLOGY TODAY INC.
P.O. BOX 240, Massapequa, NY 11762-0240

Name _____
Address _____
City _____ State _____ Zip _____

SHIPPING CHARGES IN USA AND CANADA

$0.01 to $5.00	$2.00
$5.01 to $10.00	$3.00
$10.01 to 20.00	$4.00
$20.01 to 30.00	$5.00
$30.01 to 40.00	$6.00
$40.01 to 50.00	$7.00
$50.01 and above	$8.50

SORRY No orders accepted outside of USA & Canada

Number of books ordered ☐

Total price of merchandise	$ _____
Shipping (see chart)	$ _____
Subtotal	$ _____
Sales Tax (NYS only)	$ _____
Total Enclosed	$ _____

All payments must be in U.S. funds!

ET01

www.americanradiohistory.com

Tools

mcm electronics®

What You Want..... Today!™

25th year

You Must Provide this Source Code to Recieve Discount Pricing

POP90

call toll free
1-800-543-4330

fax toll free
1-800-765-6960

customer service call toll free
1-877-626-3532

www.mcmelectronics.com

Visit and order from our secured website

- Crimping Tools
- Hand Tools
- Labor Saving Devices
- Laser Level Products
- Magnifier Lights
- Multipurpose Tools
- Power Tools
- Screwdrivers
- Soldering and Desoldering Stations
- Soldering Irons
- Tool Cases
- Tool Kits
- Wire Strippers

Rechargeable Screwdriver

Handle can be folded for pistol grip type use. Reversible, six torque settings. Accepts standard ¼" hex bits, includes two slotted and two Phillips type. Also includes plug in charger and two battery packs. Battery can be charged in or out of the driver. Overall length 10".

Order # 22-1710 Reg. ~~$35.95~~

Only! $26.95

Round Hole Cutter with Adjustable Radius Blades

Ideal for installing ceiling speakers, recessed lighting, or any project requiring a round hole to be cut. Cuts up to a 10" round hole in ceilings, walls, and floors. Cuts plywood, plasterboard, and acrylic up to 1" thick. Features include: Can be used with any variable speed drill. Cutting radius is freely adjustable via adjusting lever. Support base steadies the drill bit while cutting and keeps the cut perpendicular to the surface. Transparent cowl prevents chips from flying into eyes while cutting.

Order # 22-7385 Reg. ~~$79.95~~

Only! $69.95

Compression "F" Connector Tool

•Compresses RG-6 and RG-59 Snap-N-Seal type connectors •Cushion handles for better grip and comfort •Overall length: 8½"

Order # 22-3250 Reg. ~~$29.95~~

Only! $24.95

105 Piece Security/Standard Screwdriver Bit Set

This complete set includes security bits to remove tamper resistant screws found in many of today's popular electronics as well as standard bits for more common fasteners. This kit also includes a heavy duty ratchet screwdriver with forward, reverse, and conventional settings. The 105 piece kit contains: 3/32", 7/64", 1/8", 9/64", 5/32", 3/16", 7/32", 1/4", 9/32", 5/16" slotted bits; #0, #1, #2, #3, #4, drywall #2 Phillips bits; SD-5, 5.5, 6, 7, 8, 9, 10, 15, 20, 25, 27, 30, 35, 40, 45, 50 star drive bits; S-0, 1, 2, 3 square drive bits; Hex SAE 1/16", 5/64", 3/32", 7/64", 1/8", 9/64", 5/32", 3/16", 7/32", 1/4", 9/32", 5/16" bits; pozi #0, #1, #2, #3, #4 bits; Hex mm 1.5, 2, 2.5, 3, 4, 5, 5.5, 6, 7, 8 bits; clutch 1/8", 5/32", 3/16", 1/4", 7/32" clutch bits; T8, T10, T15, T20, T25, T27, T30, T35, T40 security torx bits; 6, 8, 10mm torx bits; 5/32", 9/64", 1/8", 7/64" 3/32", 5/64" security hex bits; 2, 2.5, 3, 4, 5, 6mm security hex bits; #1, 2, 3, 4 tri wing bits; 4, 6, 8, 10mm spanner bits; 2 5/16" magnetic extension bit holder; ¼" hex x ¼" dr. socket adaptor; three setting ratchet handle; convenient carry case. All bits fit any ¼" hex driver and most power screwdrivers.

Order # 22-3495 Reg. ~~$29.95~~

Only! $19.95

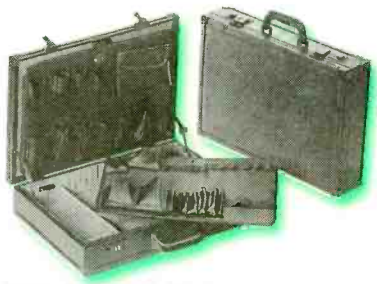

Attache Tool Case

•Rugged soft case is ideal for hand tools, soldering equipment, and hand held test equipment •Includes two tool pallets with 18 sewn pockets •Soft rubber bottom provides cushion and protection for tools •Features full-length piano hinge, combination lock, golf grip handle, and tool dividers •Outside dimensions are 18" (L) x 13" (W) x 4" (D) •Color is black

Order # 22-7065 Reg. ~~$39.95~~

Only! $29.95

You can find the tools you need at MCM Electronics. For your installation jobs, MCM carries hole cutters, saws and drills. Don't forget our solder stations and hand tools that will make your workbench complete. See how much more smoothly your project goes with the right tools. Visit our website for our complete offering or call and request free literature.

Source Code: POP90 Prices effective September 1 through November 30, 2001.

A Premier Farnell Company

CIRCLE 324 ON FREE INFORMATION CARD

www.americanradiohistory.com

The BEST is now Better!

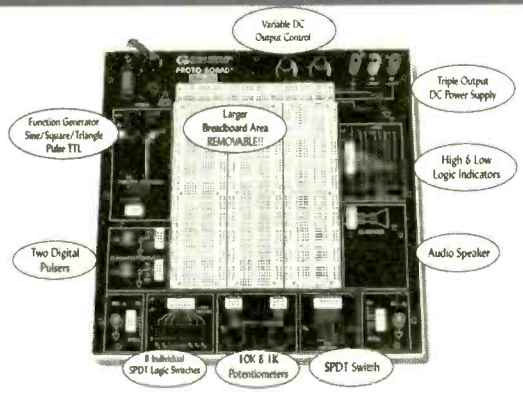

Feature-rich Circuit Design Workstation
Ultra-affordable at just $299.95
Portable Version Available for $349.95

Our classic PB-503 the complete Proto-Board Design Workstation is newly improved. Enhancements include: an 8-channel Logic Monitor, High & Low buffered Logic Indicators, 8 selectable Logic Switches, and removable Breadboard Socket Plate. This Velcro-backed socket plate allows for greater circuit design flexibility; order extra to suit your needs.

Traditional instrumentation on the unit includes a continuously variable Function Generator, triple output DC Power Supply, along with Switches, Digital Pulsers, Potentiometers and an Audio Speaker. The highly functional PB-503 is built to last, with an industry best

3-year warranty along with a lifetime warranty on all breadboard sockets. Own the best! Order yours today.

GLOBAL SPECIALTIES
INSTRUMENTS

1486 Highland Avenue • Unit 2
Cheshire, CT 06410
1.800.572.1028
203.272.4330 FAX
www.globalspecialties.com

Graphic Interface with Touch screen control

Priced From **$140.00** Qty 1

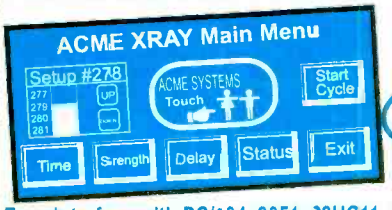

Easy Operator Interface through serial connection

Easy Interface with PC/104, 8051, 68HC11, PIC

- Graphic display
- Touch screen
- Serial communication (RS-232C)
- Eprom or Flash for screen storage
- Only +5VDC power required
- Easy to use development software
- Create screens by PC paintbrush
- Simple to place touch buttons software

Many Sizes Available

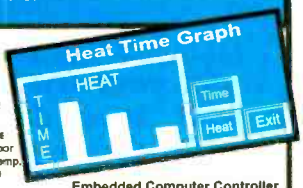

Many Types Indoor, Outdoor Factory, Ext. Temp. COFL, LED Available

Embedded Computer Controller Also Available

Designtech Engineering Co.
2001 S. Blue Island Ave.
Chicago, IL 60608
Phone 312-243-4700
Fax 312-243-4776

www.designtechengineering.com

Be an FCC LICENSED ELECTRONICS TECHNICIAN!

$16900 ONE LOW PRICE

GUARANTEED TO PASS
YOU GET YOUR FCC LICENSE OR GET YOUR MONEY BACK!

CALL NOW FOR FREE INFORMATION!

START YOUR OWN BUSINESS!

COMMAND PRODUCTIONS

FCC LICENSE TRAINING
Dept. 90
P.O. Box 2824
San Francisco, CA 94126-2824

(800)932-4268 Ext. 90

VISA MasterCard

Email: fcc@commandproductions.com • Website: www.LicenseTraining.com • Fax 415-332-1901

CIRCLE 321 ON FREE INFORMATION CARD

www.americanradiohistory.com

SCRAMBLED VIDEO

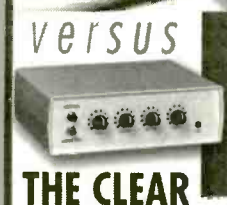

THE CLEAR SOLUTION Model VSG-RFDL

.....RESTORES LOST VIDEO

R.C. Distributing Company
P.O. Box 552 South Bend, IN 46624
Phone (219) 233-3053 Fax (219) 289-1566

www.rcdistributing.com

PAiA

Theremin
The PAiA Theremax uses the same heterodyne principles as the original turn of the century instrument for classic tone and adds features made possible by modern ICs. *Shown with optional lectern case.*

9505K Kit $89.75

FatMan Analog MIDI Synth
9308K Kit $154.00
A complete music synthesizer with all the big bottom and phat sound that makes analog famous. 20 knobs and controls for real-time sound sculpting. Compatible with standard MIDI sources like keyboards or computers. *Desktop case or rack panel available.*

Check out **http://Paia.com** for schematics, tech details, firmware source files and more...

Synthesizer Modules, Guitar Effects, Mixers, EQs, Tube PreAmps, and dozens of kits for
ELECTRONIC MUSICIANS

PAiA Electronics
3200 Teakwood Lane
Edmond, OK 73013
info@paia.com
405.340.6300
fax 405.340.6378

SMART CARDS

Complete system! Program your own smart card applications in easy to use BASIC!

- Security Systems
- Time Cards
- Emulation
- Access Control - Home, Auto
- Robotics Programming
- DATA Security

Tool Kit comes complete with:
- SmartCard Programmer
- Developer Software Package
- User Manual in printed form
- 3 Blank Smart Cards

Complete system for only $79.95

We accept
VISA • MasterCard • American Express

To Order Call 1-800-773-6698 Worldwyde.Com,
33523 Eight Mile Rd #A3-261, Livonia, MI. 48152
Visit us online http://www.worldwyde.com

CABLE SECRETS!!!

Build your OWN cable box "test" devices!

Why pay $100.00 or *more* for a "test" device that someone *else* made? Make your own! Includes complete source code and plans for the most commonly used cable boxes. *Unlock all of the channels on your box!*

Or start your own lucrative business!

Complete source code $79.95
Code for individual boxes $29.95

DSS SECRETS — Vol. 2

Step-by-step instructions on programming your own DSS access card. *Unlock all channels on your own card!* This is the most current information on the market! Includes software, plans, and hardware sources. Book & CD-ROM.

DSS Secrets Vol. 2 ..... $49.95

VISA • MasterCard • AmericanExpress
To order, call Worldwyde @ 1-800-773-6698
33523 Eight Mile Rd. #A3-261 • Livonia, MI 48152
Visit us on the web at www.worldwyde.com

Solar Panels

160 mW / Sun 8 Cells

200pc	2Kpc	20Kpc	200Kpc
$2.00 ea	$1.80 ea	$1.71 ea	$0.85 ea

Battery Holders

AA Singles, and Dual Side by Side

200pc	2Kpc	20Kpc	200Kpc
$0.40 ea	$0.36 ea	$0.34 ea	$0.17 ea

LED's

High Intensity HPWT-DL00
Similer to Lumex type SSL-LX30448SYC

200pc	2Kpc	20Kpc	200Kpc
$0.50 ea	$0.45 ea	$0.43 ea	$0.21 ea

Call 1-847-612-2739

Black Feather ELECTRONICS

Visit our Website
www.blkfeather.com

- 4400 S. Robinson Avenue
- Oklahoma City, OK 73109
- FAX: (405) 616-9603
- Email: blkfea@aol.com

Or call & order today:
1-405-616-0374

CABLE BOX SUPPLIERS

VISION MASTER PLUS
W/UNIVERSAL FORMAT
STABILIZERS PICTURE
WORKS ANY SYSTEM!

"DEALERS WELCOME"
★ LOW, LOW PRICING ★
1-888-777-9123
1-888-675-3687

PCB Production

Double side—12¢ per in²
Four layers—20¢ in²
Six layers—32¢ in²
UL approved
(with solder mask, Silkscreen
Three weeks)
FREE Quote for 8-12L
PCB & membrance switch

MYLYDIA INC.

Call 626-292-2686
Fax: 626-292-2689
E-mail: tj2@ix.netcom.com

PIC Programmer Kits

Super Value!
$16.95 +S&H $4.95*

The P16PRO: can program up to 40 pin PICs including the popular 16F84 & 12C508 • Needs software (extra $20) • Available assembled or starting from $16.95 for the kit.
See www.electronics123.com for more info!

The PICALL programmer can also progam Atmel AVRs in addition to the PICs it can program • Free software • PICALL programmer kit at $69.95
See www.electronics123.com for more info!

Video Camera module Code:BB004

CMOS Camera Module, Black & White, Size: 0.63"x0.63"x0.59"H. Lens: f4.9, F2.8. EIA 320Hx240V. 0.6" DIL Package. 5 pins. Pin 3 is 1V p-p composite video (75 ohm) to monitor. $36 + $5 S&H

Running Lights kit Add $6 for 8 triacs to drive light bulbs

8 LEDs with 10 push button selectable patterns. 8 speed levels! 80 combinations! $16 + $5 S&H

Toll Free: 1-888-549-3749 (USA & Canada)
Tel: (330) 549-3726. Request a FREE catalog or visit us at: www.electronics123.com for more products.
Amazon Electronics, Box 21 Columbiana OH 44408

www.americanradiohistory.com

Top Secret Consumertronics

In business 25+ years - established professionals

Exciting Hi-Tech Survival Books, Manuals, Tapes

Stopping Power Meters	$29	Polygraph Secrets	$29
SPM Demo VHS Tape	$29	Identity Theft Manual	$29
KW-HR Meters	$29	Credit Card Security	$29
Gas & Water Security	$19	Check & M.O. Security	$29
Beyond Phone Color Boxes	$29	ATM Manual	$39
Cellphone/Cordless Guide	$39	Mind Control	$29
Pager (Beeper) Manual	$29	Under Attack!	$29
Caller ID & ANI Security	$29	EM Brainblaster	$29
Voice Mail Security	$29	Radionics Manual	$29
PBX Security	$25	Heal Thyself!	$29
Fax Machine Security	$29	Ultimate Success Manual	$29
Computer Security	$39	Stealth Technology	$29
Hacker Files (3 HD Disks)	$39	High Voltage Devices	$29
Social Engineering	$29	Secret & Survival Radio	$29
Cons & Scams Databook	$29	Secrets of Solderless BBs	$29
Internet Security	$29	The "Goldfinger"	$19
Internet Frauds Databook	$29	Casino Secrets	$29
Internet Tracking/Tracing	$29	Government Land Grab	$19
Beyond Van Eck Tempest	$29	Rockets Red Glare	$29
Van Eck Demo VHS Tape	$29	*...much more in Catalog!*	

Check, MO, VISA, MC - add $5 S/H (US, Canada)
FREE Online Catalog: www.tsc-global.com
Printed Catalog: $1 with order, $3 w/o (descriptions, policies)

Order Today! **Consumertronics**
P.O. Box 23097, ABQ, NM 87192
505-321-1034 Fax: 505-275-5637

Scrambling News

915 NW First Ave., Suite 2902, Miami FL, 33136, 305-372-9427

Pay TV and Satellite Descrambling 2002 - New! - satellite and cable. Includes the latest information. $19.95 plus $1.75 shipping.

Hacking Digital Satellite Systems Video 2002 - New! - This 90 minute video focuses on the satellite television piracy business. $29.95 plus $ 3.50 shipping.

Scrambling News Online - Online service for those interested in satellite television news. $59.95/year.

Pay TV and Satellite Descrambling Series CD-ROM - all 13 volumes over 300 pages, $59.95 plus $3.50 shipping.

Best Deal - Everything listed above for only $99.95 plus $3.50 shipping.

www.scramblingnews.com

SCINTILLATING!

Who Are You? The Encyclopedia of Personal Identification. Insider information directly from the FBI and Customs, top graphic artists, offshore attorneys, master thieves, and professional sharks. *Who Are You?* details ID theft schemes (and prevention), how to create great documents on a home computer, get a new driver's license (suspension? No problem), open offshore or US bank accounts w/o an SS number, acquire the world's best ID, second passports, phony credit cards, read vehicle tags, much, much more. Sources, sites, suppliers, tips, tricks and techniques. 352 pages $44.95.

Covert Catalog2000 The latest, hands-on source guide for law enforcement goodies, electronic surveillance, covert video, counter measures, entry equipment, weapons, tracking systems, computer surveillance, and more. Exact ordering info from suppliers in *13 nations!* 220 Pages. $39.95.

ORDER BOTH BOOKS — SUBTRACT $10!!

Intelligence Here
404 N. Mt. Shasta Blvd.
Mt. Shasta, CA 96067
Order by Phone: 866-885-8855
www.Intelligencehere.com.
Add $6.00 (priority shipping). CA residents add 8% tax

PICmicro MCU Development Tools

Experimenter Boards

LAB-X1 for 40-pin MCUs (shown) - $199.95
LAB-X2 for 28 or 40-pin MCUs - $69.95
LAB-X3 for 18-pin MCUs - $119.95

EPIC Plus PICmicro Programmer $59.95

Program PICmicro MCUs in BASIC!
DOS or Windows operation (includes Windows IDE software).
PicBasic Compiler - $99.95
PicBasic Pro Compiler - $249.95

PICProto Prototyping Boards
$8.95 to $19.95
High-quality blank prototyping boards for PICmicro MCUs.

microEngineering Labs, Inc.
www.melabs.com
Phone: (719) 520-5323
Fax: (719) 520-1867
Box 60039, Colorado Springs, CO 80960

Press-n-Peel Transfer Film

PC Boards in Minutes

8.5" x 11" Shts.
* Or Photocopy
**Use standard household iron

1. LaserPrint*
2. Press On**
3. Peel Off
4. Etch

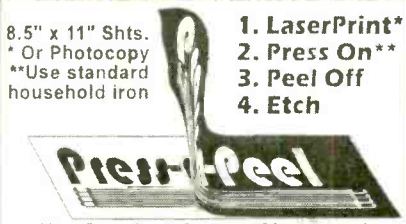

Use Standard Copper Clad Board
20 Shts $30/ 40 Shts $50/ 100 Shts $100
Visa/MC/PO/Ck/MO $4 S&H/Foreign Add $7

Techniks Inc.
P.O. Box 463, Ringoes NJ 08551
ph. 908.788.8249 fax 908.788.8837
www.techniks.com
Vist Our E-Store On-Line!

CONTROL IT

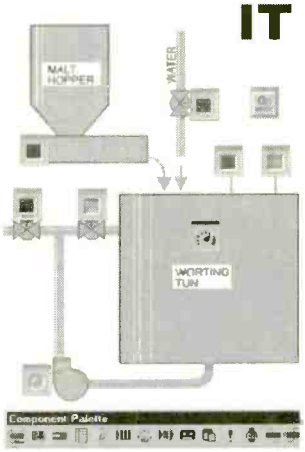

Intec Automation Inc.
www.microcommander.com

spyoutlet.com

Countersurveillance - Electronic Devices

Purchase your video cameras from *one of the largest importers in the U.S.*

- NEW *Underwater* Bullet Cameras
- *Spy Pinhole Cameras* starting at $79.00
- Wireless Video • Voice Changer
- Micro Recorders • Shotgun Mic
- Locksmithing • Bug & Phone Tap Detectors • Phone Call Register
- UV Pens & Powder • *Realtime Telephone Recording Systems:* 12 Hour $125.00 • GPS Vehicle Tracking System (nationwide)

And much more

www.spyoutlet.com
Printed Catalog send $5.00

SPY OUTLET 2468 NIA. FALLS BLVD
TONAWANDA NY 14150 (716) 695-8660

NEW Easy-PC For Windows

Schematic & PCB Layout CAD

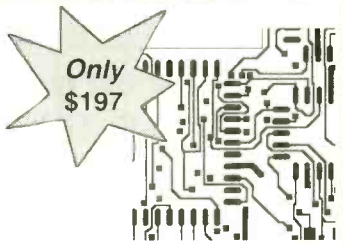

- True Windows interface
- True Windows 32 bit application
- Schematic and PCB Design as standard
- Intelligent Cut, Copy and Paste - internal & external
- Multi-level Undo and Redo
- Forward design changes - Schematic to PCB
- Integrated Autoplace
- Integrated Shape based AutoRouter (Optional Extra)
- Shape based copper pour and split power planes
- *And now version 4.0 with many new features !!*

Call Ohio Automation (740) 596 1023
www.numberone.com

CABLE TV REMOTES BLOW-OUT SALE

We carry all models

50pc.	100pc.	500pc.	1kpcs.
$3.50	$3.25	$2.75	$2.50

Rebelion-3 125ch. Converter

12pc.	50pc.	100pc.
$50.00	$47.00	$44.00

Magnavox Universal Remote Controls

12pc.	50pc.	100pc.
$4.50	$4.00	$3.75

Call Today **Globaltech 1-(800)-582-5116**
View Our On-Line Display Catalog at:
www.globaltechdistributors.com

www.americanradiohistory.com

NEW! CREDIT CARD COMPUTER II

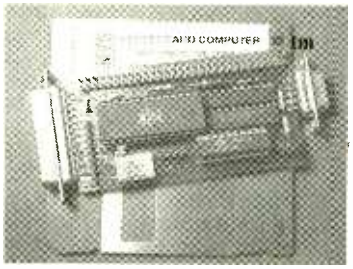

MVS PLUG-N-GO™ no cables/power supply to buy!
Low-power RISC cpu 10x faster than PIC. Z80. 8051
2m FLASH,ser,par,RTCC,4ch 12bit ADC,ISA104 bus
Built-in BASIC/Assembly, other compilers available
Friendly instructions, RS232 download (DOS/WIN)
Eval kit (1) $75, oem (1k) $21, CC computer I $14.20

640x480 VGA LCD $27

Controller for most single/dual scan LCDs
Works with lo-res (160x120, 320x240,etc.)
Use with PC or SBC, standard VGA BIOS
Source code demo shows VGA initialization
Adaptable for other CPUs (i.e. Z80, HC11)
oem(1k) $27 evalkit(1) $95 w/10"LCD $195

PC WATCHDOG CARD

No More Hangups!

Reboots PC on hardware/software hang
3 versions: RESET, TIMER, PHONE
reset version oem $21.30, eval kit $75

PC WATCHDOG CARD

No More Hangups!

Reboots PC on hardware/software hang
3 versions: RESET, TIMER, PHONE
reset version oem $21.30, eval kit $75

PC SOLID STATE DISK

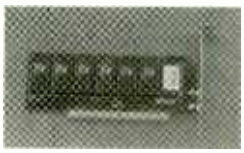

Replace mechanical drives with faster, more reliable, more secure solid-state. Use FLASH, NVRAM, UV EPROM. Both DIP and PCMCIA versions from 32Kbyte (PCM1) to 1Gigabyt (PCD2) starting at $14.20oem(1k) $50.00eval(1)

STAMP DRIVE !!

Read/Write PC compatible hard disk, PCMCIA, Compact Flash.
RS232 to ATA adapter for Stamp, Z80,8051,AVR,PIC,x86. ANY cpu
- 4 gigabyte capacity
- low power (5ma @5v)
- baud 115.2k and above
eval $95,oem $27,IDE ver. $14.20

SINGLE CHIP COMPUTER

ZERO external components
Built-in BASIC / Assembly
RS232 program download
1k flash,64ee,3irq,2timers
15 i/o bits,ADC,20 pin DIP
20mips faster than PIC/z80

oem(1k) eval kit(1)

$1.99 $7.00

NEW! 8K SUPER CHIP

40x the BASIC pgm space
32 i/o, 12 irq, 3 timers, bus
8K flash, 512ee, 512nvram
Watchdog w/ internal osc.
40 pin DIP part #MV8515
eval(1) $25, oem(1k) $7.10

SERIAL MINI-TERMINAL

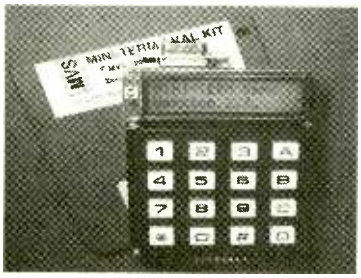

RS232 terminal for Stamp, PC, Z80, AVR etc.
-super low current, powers from serial line
-LED backlit LCD, visible in all conditions
-115.2kbps, DB9 conn, simple commands
-specify 20 customizable or 16 tactile keys
eval(1) $75,oem(1k) $21.30,w/BASIC cpu $27

WWW.MVSNET.COM or STAR.NET/PEOPLE/~MVS

MVS Box 850
Merr.,NH 03054
(508) 792 9507

.MVS

5yr Limited Warranty
Free Shipping
Mon-Fri 10-6 EST

SERVING THE EMBEDDED COMMUNITY SINCE 1979!

CIRCLE 296 ON FREE INFORMATION CARD

www.americanradiohistory.com

Learn PC Repair!

The Ultimate Self-Paced PC Assembly and Repair Course

This is the simplest, easiest and most complete course on how to understand, assemble, and diagnose PCs available today. It contains all the text, videos and diagnostic software you'll need to succeed.

Self-Study Course Manual

The manual is a self-study workbook that will enable you to quickly teach yourself all about computers, how they're put together and how to keep them working. Just follow the step-by-step instructions on each page.

At the end of the course you'll know how to build a PC and install & configure Microsoft Windows.

Videos

The two videos included contain over 3 hours of the Micro 2000 engineering team teaching everything from the basics of PC assembly all the way to using the MicroScope software to troubleshoot them! Watch the pro's in action as they build a completely functional Pentium system with all the major peripherals.

Software

This course includes a Limited Edition version (25 uses) of the award winning MicroScope Diagnostic Software. Use it to build your own PC (computer not included), upgrade it and troubleshoot any problems.

Only **$99.95**

Complete Course

Product # 02-020

Course includes:

- 200 + Page Training Manual
- PC Assembly & Configuration Video
- PC Diagnostic Video
- Micro-Scope Diagnostic Software (LE)
- CD-ROM - contains videos and manual

Call (800) 321-2155 **www.ciebookstore.com**

CIE Bookstore: 1776 E 17th Cleveland, OH 44114

CIE INSTITUTE OF ELECTRONICS · 1934 ·

It's almost like being paid to study.

Earn an Associate Degree in Electronic Engineering Technology...

Put your knowledge of electronics to work for you. CIE offers the most comprehensive Associate Degree program offered in electronics. Best of all you study at your own pace with the full resources of CIE just a phone call or a click of a mouse away.

It's Comprehensive and Unique. You Pay for Only the Time You Use!

You won't find a better school than CIE if you want to accomplish your goals without pesky time restrictions (commuting, 8 hour class days, etc.) at CIE you study at your own pace, even an accelerated pace. And if you're like most readers of this magazine, your electronics background can help you receive your degree in less than the maximum 8 terms allowed. Finish sooner and you can save thousands of dollars in tuition. It's almost like being paid to study.

Get all the details on CIE's Associate Degree Program, World College's Bachelor Degree Program and CIE's 10 Career Courses today!

CIE

Free Course Catalog!

(800) 243-6446

www.cie-wc.edu

For a FREE Course Catalog on all of our Programs send to CIE: 1776 E. 17th St., Cleveland, OH 44114-3679 or visit www.cie-wc.edu PT30

Name: _____

Address: _____

City: _____

State: _____ Zip: _____

Phone: _____

E-mail: _____

CIRCLE 320 ON FREE INFORMATION CARD

www.americanradiohistory.com

CALL TOLL FREE
(800) 292-7711
Orders Only
Se Habla Español

C&S Sales

Excellence in Service

Look For Other Monthly Specials On Our Website
www.cs-sales.com

D/A Trainer

Elenco Model XK-700

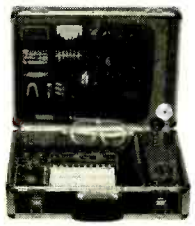

$195

Elenco's advanced designed Digital/Analog Trainer is specially designed for school projects. It is built on a single PC board for maximum reliability. It includes 5 built-in power supplies, a function generator with continuously variable sine, triangular, and square waveforms. All power supplies are regulated and protected against shorts. The trainer is mounted in a professional technician tool case made of reinforced metal with heavy-duty handles and locks.

Soldering Stations

Weller Low Cost Soldering Iron
Model WLC-100

$34.95

- Variable power control produces 5-40 watts.
- Ideal for hobbyists, DIYers and students.
- Complete with 40W iron.

Weller Soldering Station
Model WES50

50 watts of controlled power - designed for continuous production soldering.

$119

Deluxe Electronic Soldering Station

Elenco SL-5 Series

Electronically controlled, ideal for professionals, students, and hobbyists. Available in kit form or assembled.

Works w/ any iron! Turn any soldering iron into a variable iron.

As Low As $29.95

Features:
- Cushion Grip Handle Soldering Iron (optional) with Grounded Tip for Soldering Static-Sensitive Devices. Easily Replaceable. Uses Long-Life, Plated Conical Tip.
- Heavy Steel, Non-Slip Base.
- Iron Holder Funnel - Reversible, left or right side.
- Steel Tray for Sponge Pad.
- Sponge Pad.

Ordering Information:

Model SL-5 - No Iron. (Kit SL-5K)	$29.95
Model SL-5-40 - Includes 40W UL iron. (Kit SL-5K-40)	$35.95

*** Limited Time Offer ***
FREE SP-1A Solder Practice Kit w/ Kit Order!

Generators & Counters

B&K 20MHz Sweep/Function Generator with Frequency Counter Model 4040

- 0.2Hz to 20MHz
- AM & FM modulation
- Burst Operation
- External Frequency counter to 30MHz
- Linear and Log sweep

$425

10MHz Model 4017	$319
5MHz Model 4011	$249
3MHz Model 4003	$205

B&K PRECISION

Four Functions in One
Elenco Model MX-9300B

Features:
- One instrument with four test and measuring systems:
  - 1.3GHz Frequency Counter
  - 2MHz Sweep Function Generator
  - Digital Multimeter
  - Digital Triple Power Supply - 0-3V @ 2A, 5V @ 2A, 15V @ 1A

$450

Elenco Handheld Universal Counter
1MHz - 2.8GHz
Model F-2800

$99

Features 10 digit display, 16 segment and RF signal strength bargraph.

Includes antenna, NiCad battery, and AC adapter.

C-2800 Case with Belt Clip $14.95

Elenco RF Generator with Counter
(100kHz - 150kHz) Model SG-9500

Features internal AM mod. of 1kHz. RF output 100MV - 35MHz. Audio output 1kHz @ 1V RMS.

$225

SG-9000.....$119.95
(analog, w/o counter)

Elenco Sweep Function Generator
w/ built-in frequency counter Model GF-8046

$195.95

This sweep function generator with counter is an instrument capable of generating square, triangle, and sine waveforms, and TTL, CMOS pulse over a frequency range from 0.2Hz to 2MHz.

GF-8025 - Without Counter $139.95

Kit Corner

over 100 kits available

Quantity Discounts Available

Elenco Model RCC-7K
Radio Control Car Kit

$29.95

- Fun & Easy to Assemble
- 7 Functions
- Radio Control Transmitter Included
- Also available as Model AK-870 (No Soldering) $24.95

Elenco
Model AK-700
Pulse/Tone
Telephone Kit

$15.95

Ideal School Project

Action Lab Kit
Model MX-902

- Safe, Solderless, Educational, and Fun!
- Easy-to-read, Illustrated, Lab-Style Manual Included.
- Requires 2 "AA" Batteries
- Build your own operating motor - it's easy, it's fun, it's Safe!
- For Ages 10 and up.

$24.95

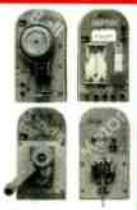

Elenco Model AM-780K
Two IC Radio Kit

$11.95

Also available:
Model AM/FM-108K
AM/FM Radio Kit
$29.95

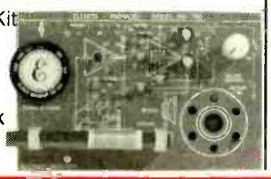

OWI Model OWI-007
Robotic Arm
(Wired Control)

Teaches the basic robotic sensing and locomotion principles while testing motor skills.

$55.95

Elenco Digital Multimeter Kit
Model M-2665K

- Extra large 1 1/4" x 2 1/2" LCD display area.
- 34 ranges - includes capacitance, transistor testing hFE, diode testing
- 20A AC/DC current
- Overload protected

$49.95

Guaranteed Lowest Prices
UPS SHIPPING: 48 STATES 5%
OTHERS CALL FOR DETAILS
IL Residents add 8.25% Sales Tax

C&S SALES, INC.
150 W. CARPENTER AVENUE
WHEELING, IL 60090
FAX: (847) 541-9904 (847) 541-0710

15 DAY MONEY BACK GUARANTEE
2 YEAR FACTORY WARRANTY

PRICES SUBJECT TO CHANGE WITHOUT NOTICE

CIRCLE 290 ON FREE INFORMATION CARD

www.americanradiohistory.com

SAME DAY SHIPPING
Secure on-line ordering

C&S Sales
Excellence in Service

CALL OR WRITE FOR OUR **FREE** 64 PAGE CATALOG!
(800) 445-3201

Elenco Oscilloscopes

Free Dust Cover and 2 Probes

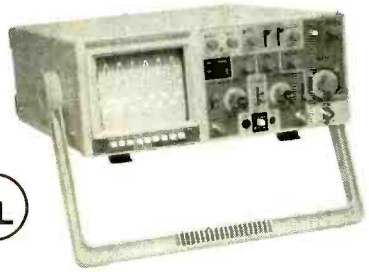

S-1325	25MHz	Dual Trace	$325
S-1330	25MHz	Delayed Sweep	$439
S-1340	40MHz	Dual Trace	$475
S-1345	40MHz	Delayed Sweep	$569
S-1360	60MHz	Delayed Sweep	$725
S-1390	100MHz	Delayed Sweep	$895

DIGITAL SCOPE SUPER SPECIALS

DS-203	20MHz/10Ms/s Analog/Digital	$695
DS-303	40MHz/20Ms/s Analog/Digital	$850
DS-603	60MHz/20Ms/s Analog/Digital	$950

Quantity Discounts Available

Digital Multimeters

Fluke 79III — $195

Features analog bargraph, automatic touch hold, diode test, continuity beeper, fused current inputs, lead resistance compensation, lo ohms, and true RMS.

Elenco LCR & DMM Model LCM-1950 — $69

- Large 1", 3 3/4 digit LCD
- Autoranging frequency to 4MHz
- Capacitance to 400µF
- Inductance to 40H
- Resistance to 4000MΩ
- Logic Test
- Diode & Transistor Test
- Audible Continuity Test

Elenco Model M-1740 — $34.95

- 11 Functions
- Freq. to 20MHz
- Cap. to 20µF
- AC/DC Voltage
- AC/DC Current
- Beeper
- Diode Test
- Transistor Test
- Meets UL-1244 safety specs

Model M-2760 - $19.95 (9 functions)

Dual-Display LCR Meter w/ Stat Functions B&K Model 878 — $225

Auto/manual range
Many features with Q factor
High Accuracy

Elenco LCR Meter Model LCR-1810 — $99.95

- Capacitance .1pF to 20µF
- Inductance 1µH to 20H
- Resistance .01Ω to 2000MΩ
- Temperature to 750°C
- DC Volts 0 - 20V
- Frequency up to 15MHz
- Diode/Audible Continuity Test
- Signal Output Function
- 3 1/2 Digit Display

Elenco DMM Kit Model M-1005K — $19.95

- 18 Ranges
- 3 1/2 Digit LCD
- Transistor Test
- Diode Test
- Training Course

M-1000B (Assembled) $15.95

Project Labs

Elenco 50-in-1 Electronic Playground Model EP-50 — $19.95

Easy-to-build experiments teach you the operation of over 50 electronic circuits. Fully assembled, includes all the parts needed. No tools or soldering required! Build these exciting circuits: finger touch lamp, magnetic bridge, voltmeter, morse code alarm, electronic noisemaker, electronic kazoo, electronic keyboard, transistor radio, radio announcer, metal detector, and many more. 76 page manual teaches you about voltage, current, resistors, capacitors, transistors, diodes, transformers, speakers, and antennas. Requires one 9V battery.

Maxitronix 300-in-1 Electronic Project Lab Model MX-908 — $48.95

Everything you need to build 300 exciting electronic projects:

- A Transistor Radio
- IC Organ
- Burglar Alarm
- Delayed Timer
- Electronic Game
- Optical Volume
- Multiplier
- Multiple Counter
- Digital Light Dimmer
- Tone Burst Generator
- Audio Signal Tracer
- Electronic Candle
- Voice Level Meter
- and many, many more!!

• Easy-to-read, illustrated, lab-style manual included.

Maxitronix 500-in-1 Electronic Project Lab Model MX-909 — $170

Everything you need to build 500 exciting electronic projects:
Learn the basics of electronics and put your knowledge to work creating 500 different electronic experiments, special lighting effects, radio transmitter and receivers, amazing electronic sound effects, cool games and MORE!
Includes built-in breadboard for easy wiring and connection of components, and an LCD (Liquid Crystal Display) indicates the information during the experiments in process.

• Fact-filled, illustrated, lab-style manual included.

Power Supplies

Elenco Quad Power Supply Model XP-581 — $79.95

4 Fully Regulated DC Power Supplies in 1 Unit
4 DC voltages: 3 fixed - +5V @ 3A, +12V @ 1A, -12V @ 1A
1 Variable - 2.5 - 20V @ 2A

Elenco Power Supply Kit Model XP-720K — $54.95

- 1.5VDC - 15VDC @ 1A
- --1.5VDC - --15VDC
- 5VDC @ 3A
- 6.3VAC @ 1A & 12.6VAC center tapped @ 1A

XP-720 Fully Assembled **$85**

Elenco AC/DC Variable Power Supply Model XP-800

The XP-800 is a high current power supply with 3 variable outputs. Choose from either 0-120VAC @ 2A, 0-40VAC @ 7A, or 0-28VDC @ up to 10A. The precision LED displays allow for exact readout of volts and current. The XP-800 is ideal for Principles of Technology experiments in schools or it can be used as a bench power supply in OEM labs.

$325

Elenco DC Power Supply Model SPL-603 3A 0-30VDC — $79.95

The SPL-603 is a solid-state DC power supply providing the exact output voltage no matter what current you use. Output fully protected from overload.

Tool Kits

Elenco Deluxe Electronic Tool Kit Model TK-3000 — $79.95

A professional technician service tool kit in a metal reinforced tool case with heavy-duty handle and locks. A removable, double-sided pallet handles most of the tools listed below with more room for tools and parts in the lower half. A special ramp in the tool case will lock your meter of choice in place.

Tools included in case:
• Deluxe Soldering Iron, • Soldering Iron Stand, • Diagonal Pliers, • Long Nose Pliers, • Deluxe Wire Stripper, • Solder Ease Kit, • 3 pc. Nut Driver, • Precision Screwdriver Set, • Screwdriver Slotted 3/16", • Screwdriver #1 Phillips, • IC Extractor, • Solder Pump, • Safety Goggles, • Pocket Screwdriver, • Solder Tube, and • Solder Wick.

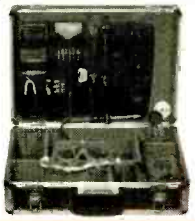

Elenco Deluxe 26pc. Computer Service Tool Kit Model TK-1200

Includes everything you need to service today's computers. Tools include deluxe soldering iron, 5" needle nose pliers, reversible star bits T10, T15, reversible bit nut drivers 3/16" and 1/4", deluxe wire stripper, IC extractor, and more! **$39.95**

Xcelite® PC Repair Kit Model 99-SPC

- Ideal for repairs on all PC's.
- Anti-static chip tools protect from ESD damage.
- Convenient roll-up pouch.

$34.95

Guaranteed Lowest Prices

UPS SHIPPING: 48 STATES 5%
OTHERS CALL FOR DETAILS
IL Residents add 8.25% Sales Tax
SEE US ON THE WEB

C&S SALES, INC.

150 W. CARPENTER AVENUE
WHEELING, IL 60090
FAX: (847) 541-9904 (847) 541-0710
www.cs-sales.com

15 DAY MONEY BACK GUARANTEE
2 YEAR FACTORY WARRANTY

PRICES SUBJECT TO CHANGE WITHOUT NOTICE

CIRCLE 290 ON FREE INFORMATION CARD

www.americanradiohistory.com

MODERN ELECTRONICS

CABLE TV DdescramblerS

- FREE CATALOG!
- BEST DEALER PRICING!
- DISCOUNTED PRICING!
- 30 DAY FREE TRIAL!
- 100% MONEY BACK GUARANTEE

COPY RENTAL TAPES WITH OUR VIDEO STABILIZER

1-800-906-6664

2609 S. 156th Circle • Omaha, NE 68130
www.modernelectronics.com

CONITEC DATASYSTEMS

TOP PERFORMANCE in a small package:
Europe's best selling multi-programmer!

Top of the line multi-programmer in sub-$500 category. From 20% to 80% market share in Germany in 6 years. 1300+ device output and growing fast. Europe-wide sales 10%-60% mkt share in 6 years. Minimal, 1% return quota for hardware defects. Replaces all low priced dedicated programmers e.g. PIC only or GAL only units. GALEP III also **substitutes higher priced universal programmers** e.g. ALL-11 (HiLO) or LAB-TOOL-48 (ADVANTECH) - It provides virtually **matching performance at only 1/3-1/5 the price.**

Programs 8-bit and 16-bit EPROMs, EE-PROMs, 0-Power RAM's, Flash, Serial EEPROMs / GAL, PALCE, ATF/87xxx, 89xxx, PIC12/16/17Cxx/ All DIL devices **without adapter!** Lightning fast parallel data transfer (27C 256 read 2 sec.- prog. 8 sec!). Supports HEX, JEDEC and binary formats, with integrated hex and fuse map editor. Fully Windows compatible incl. Win 2000 / NT. Browse 1300+ supported devices on Conitec's website: www.conitec.com. **90%+ of the listed devices require no adapter!**

GALEP III / cable, batt. and recharger ..$333.00
PLCC adapt. / 8-bit EPROMs /16-bit EPROMs /GALS ..... each $129.00

GALEP-III
Pocket Multiprogrammer

CONITEC DATASYSTEMS • 1951 4th Avenue, Suite 301 • San Diego, CA 92101 • Tel: 619-702-4420 • Info/Downloads/Orders: WWW.CONITEC.COM

Do You Repair Electronics?

Repair Databases for TV, VCR, Monitor, UL Audio, FCC, and more.

- Over 76,000 records
- Private user forums
- Live on-line chat rooms

RepairWorld.com
Electronix Corp 1 Herald Sq. Fairborn, OH 45324 (937) 878-9878

PCB Services
From Concept to Production

Schematic Development
Fast Proto boards
Production boards
Plastic molding
Metal cases
Assembly

Making your designs Affordable!!!

C Tech Industries
(800)259-0774
WWW.C-Tech.TV

www.poptronics.com

EPROM+

A device programming system for design, repair and experimentation

- *EXCEPTIONAL POWER FOR THE PRO*
- *EASY-TO-USE FOR THE NOVICE*
- *INCLUDES STEP-BY-STEP TUTORIAL*

Here's what you get: A rugged, portable programming unit including the power pack and printer port cable both of which store inside the case. A real printed user and technical manual which includes schematic diagrams for the programming unit plus diagrams for all technology family adapters.* Comprehensive, easy-to-use software which is specifically designed to run under DOS, Windows 3.1, 95 and 98 on any speed machine. The software has features which let you **READ, PROGRAM, COPY** and **COMPARE** plus much more. You have full access to your system's disk including **LOADING** and **SAVING** chip data plus automatic processing of **INTEL HEX, MOTOROLA S-RECORD** and **BINARY** files. For detailed work the system software provides a full screen **buffer editor** including a comprehensive **bit and byte tool kit** with more than 20 functions.

Broad device support: **FIRST GENERATION EPROMS** (2708, TMS2716*, 25XX) **SECOND GENERATION EPROMS** (2716-28C080), **40 AND 42 PIN EPROMS*** (27C1024-27C160) **FLASH EPROMS** (28F,29C,29EE,29F), **EEPROMS** (2816-28C010), **NVRAMS** (12XX,X2210/12) **8 PIN SERIAL EEPROMS*** (24, 25, 85, 93, 95, 80011A) PLUS **ER1400/M58657*** AND **ER5901** **BIPOLAR PROMS*** (72S/82S), **FPGA CONFIGURATORS** (17CXXX) **MICROCONTROLLERS*** (874X, 875X, 87C5XX, 87C75X, 89C5X) **ATMEL MICROS*** (8-40) PIN 89CX051, 89SXXXX (AVR) 90SXXXX **PIC MICROS*** 8, 18, 28, 40 PIN (12CXXX-16CXXX, 16FXX, 17C) **MOTOROLA MICROS*** (68705P3/U3/R3, 68HC705, 68HC711)

$289

*REQUIRES SNAP-IN ADAPTER (ORDER FACTORY DIRECT OR BUILD YOURSELF) $5.00 SHIPPING • $5.00 C.O.D.
1 YEAR WARRANTY - 30 DAY MONEY BACK GUARANTEE VISA • MASTERCARD • AMEX

ANDROMEDA RESEARCH, P.O. BOX 222, MILFORD, OH 45150
(513) 831-9708 FAX (513) 831-7562 website - www.arlabs.com

FOR 26 EASY WAYS to help SAVE the EARTH CALL 1-800-488-8887.

Ad Council — A Public Service of This Publication

Earth Share

World's Smallest 68HC11 Microcontroller Modules!

MicroStamp11™

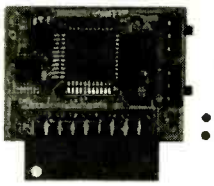

- *telemetry*
- *microrobotics*
- *smart toys*
- *animatronics*
- *model railroading*
- *home automation*

- tiny, light-weight (0.5 oz.)
- 1-inch x 1.4-inch 68HC11 module
- on-board 5V regulator
- 8MHz crystal (9.83MHz on Turbo version)
- choice of 8K or 32K EEPROM
- 32K RAM + 32K EEPROM on 64K version
- plugs into your breadboard like a DIP
- SCI (UART), SPI, Output Compares, Input Captures, harware timer, pulse accumulator
- all 14 I/O lines and 2 interrupts brought out to versatile 20-pin connector
- program in BASIC, assembler, or C
- easy code-loading with Docking Module
- Starter Packages:*
  8K EEPROM (#MS11SP8K).....$49
  32K EEPROM (#MS11SP32K).....$77
  32K EE+32K RAM (#MS11SP64K)...$90

** includes MicroStamp11, manual, PC software (freeware assembler, SBASIC compiler, MicroLoad utility, and sample programs), serial cable, Docking Module, and accessories.*

Attention OEMs:
Embed MicroStamp11 modules into your product!
only $20 each (100-pc. price, 8K version)

MicroCore-11™

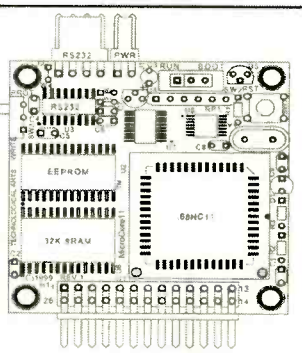

- tiny 2-inch x 2-inch 68HC11 module
- 12 inputs/outputs plus 8 analog inputs
- RS232, 5V regulator, 8MHz crystal
- 32K SRAM plus 8K or 32K EEPROM
- plugs into your breadboard like a DIP
- easy programming from any PC
- ideal for building MicroMouse robots
- now available in Turbo version (9.83MHz)

8K Starter Package #MC11SP8K.....$68
32K Starter Package #MC11SP32K.....$93
Motor driver boards, LCD/keypad/keyboard interface & prototyping cards available

Technological Arts

Many other modules & accessories available.
Visit our website at:
www.technologicalarts.com
sales@technologicalarts.com
TOLL-FREE: 1-877-963-8996
Phone: (416) 963-8996
Fax: (416) 963-9179
Visa • MasterCard • Discover • Amex

www.americanradiohistory.com

Ivex Complete
Electronics CAD Package

More Features
More Power
Less Money

Ivex Complete Power Tools include: WinDraft P350 Schematics, WinBoard P350 PCB Layout, Ivex Spice Standard Simulation and Gerber Viewer together in a complete, affordable package.

Ivex Complete Plus includes everything in the Complete package plus 650 pin versions of WinDraft and WinBoard with Ivex Spice Advanced.

Ivex 650 pin versions have no feature limitations like other low cost products on the market. Fast expert technical support, free 24 hour Knowledge Base on the web, and professional full-featured tools have made Ivex the preferred choice for designers.

For larger designs use these Ivex Products:

WinDraft unlimited $495
WinBoard unlimited $495

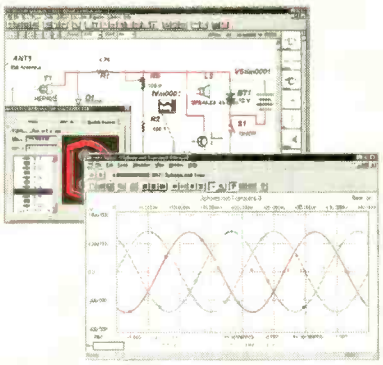

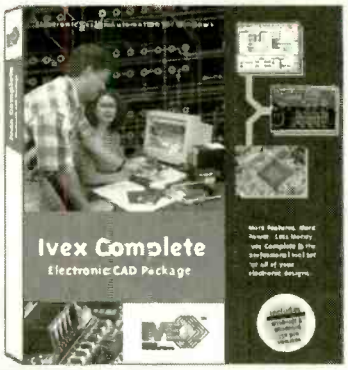

Advantages

Full-feature tools
17,000 Schematic parts
Part edit & model making
Part Search
Bill of Materials with Sort & Spreadsheet output
Heirarchy for large designs
ERC (electrical rules check)
15 Netlist outputs
7 Analysis Types
Spice Advanced includes 14 analyses
16 PCB layers
0.01 micron grid resolution
Advanced DRC
Micro via
Gerber & NC Drill report
24 hour FREE Technical Support Internet Knowledge Base
No hardware protection lock!
New: Schematic DXF output

Ivex Complete

Schematics
Simulation
PCB Layout
Gerber Viewer

$350

Ivex Complete Plus

P650 Schematics
Adv. Simulation
P650 PCB Layout
Gerber Viewer Plus

$550

Free board quote
pcbCite.com
The Internet source for PCB manufacturing

Visit the Ivex web site for complete product information and download full function demos.

www.ivex.com

Tel: (503) 531-3555 e-mail: sales@ivex.com

IVEX™ DESIGN INTERNATIONAL

ADV8_4

www.americanradiohistory.com

AMAZING DEVICES

NVEN22001EVEN

See and Order from Our "Action" Web Site at www.amazing1.com

Laser Window Bounce Listener

Powerful listening system, yet simple in operation. You shine a laser at a window and intercept the reflected beam with our ultrasensitive filtered optical receiver. Vibrations on the window from internal sounds and voices are now clearly heard. Range can be up to several hundred meters depending on laser power and optics used.

LWB9 Plans for 3 Laser Window Bounce Systems.....$20.00
LWB6K Kit of 100' Complete for Science Project $129.95
LLR3K Low Cost Optical Receiver Kit.....$69.95
LLR30 Ready to Use Above Optical Receiver.....$99.95
LLR40 Higher Performance of Above Receiver/ Optics.....$199.95
LM650P3 Visible Red 5mw Laser Module to 100'.....$29.95
CWL10 10 mw Class IIIB Invisible IR Laser up to 500'.....$199.95

PLASMA FIRE SABERS

Kits, Parts and Accessories

Duplicates effect in the motion picture epic of the century!

Specify blue, grn, pur, red or yel.

Moving light appears to evaporate into space

Blades screw into handle for easy replacement

We stock all size and color blades, *mauler* adapters, tubes digital drivers, and parts for authentic designs. **Wireless *interactive sound modules* change tone with motion**

SAB15 Assbled with 15" Blade..$39.95
SAB24 Assbled with 24" Blade..$79.95 **SAB24K** Kit ...$59.95
SAB36 Assbled with 36"Blade.$149.95 **SAB36K** Kit..$129.95

Take Control!! Electronic Hypnosis

Electronic circuitry places subject under your control! Induces ALPHA relaxed mind states.

HYP2 Plans.....$10.00
HYP2K Kit/Plans.....$49.95
HYP20 Ready to Use.....$69.95

MIND2 Plans for Mind Control.....$15.00
MIND2K Kit/Plans.....$49.95
MIND20 Ready to Use.....$79.95

Pain Field Pistol

Caution! Do not aim at people!

Blast out rodents with high power ultrasonics.

Handheld and battery operated with all controls.

Rental units available.

PPP1 Plans.....$8.00
PPP1K Kit/Plans.....$49.95
PPP10 Ready to Use.....$79.95

Jacob's Ladder

A 1/2" arc expands to over 4" as it travels up the Jacobs Ladder evaporating in space.

- **Adjustable arc control**
- **Uses safe high frequency**
- **Safety shock shut down**
- **Full 20" ladder length**
- **110/220 vac 150 watts**

JACK3K Kit.....$149.95
JACK30 Ready to Use..$249.95

30" Spark Tesla Coil

Create a spectacular display of nature's own lightning. Many amazing experiments possible. **See coil in action on our web site!!**

BTC4 Plans.....$20.00
BTC4K kit.....$899.95
BTC40 Ready to use.....$1199.95

Smaller Version (8-10" Sparks)

BTC3 Plans....$15.00 **BTC3K** Kit....$349.95
BTC30 Ready to Use.....$449.95

MINI TESLA COIL *Lights 4' light tube!*
MTC1 Plans...$5.00 **MTC1K** Kit..... $19.95
MTC10 Assmbld for 12 volts.....$34.95

6 Transmitter Kits

1. Super Sensitive Ultra Clear 1 Mile+ Voice Transmitter.
2. 1 Mile+ Telephone Transmitter.
3. Line Powered Phone Transmitter Never Needs Batteries!!
4. Tracking/Homing Beacon Beeping Transmitter
5. Video/Audio Rebroadcaster 1 Mi.
6. TV/FM Radio Disrupter. Neat Prank! Discretion Required

Includes Hints Using Wireless Devices

COMBOX Above 6 Kits/Plans.....$59.95
COMBOP Above 6 Plans Only.....$10.00

Hover Board

28 pages of data related to the most revolutionary advance in transportation. Cutting edge R&D

HOVER Plans and Data.....$25.00

Anti Gravity

Float an object using anelectric force field. With handbook

GRA3 Plans/book.....$20.00
GRA3K Kit Pwr Sup.....$99.95
GRA30 Assmbld ave..$149.95

4 KV HV MODULE for *hovercraft, plasma guns, antigravity, pyrotechnics. 12vdc input.*
MINIMAX4.....$19.95

Information Unlimited PO Box 716 Amherst N.H. U.S.A. 03031
1 800 221 1705 Orders/Catalogs Only! Fax 1 603 672 5406 Information 1 603 673 4730 *Free Catalog on Request*
Pay by MC, VISA, Cash, Check, MO. Add $5.00 S&H Overseas Contact for Proforma

CIRCLE 220 ON FREE INFORMATION CARD

"I can learn great stuff every step of the way. Radical fun!"

ROBOTIKITS® DIRECT

MAKIT YOURSELF SOLDERING KITS

WAO II
Programmable.
Actually draws.
OWI-961K
$69.95
87 Soldering Components

BEAMSTER
Five-function flashlight.
OWI-209K
$19.95
16 Soldering Components

MOONWALKER II
Sound & Light Sensor.
OWI-979K
$39.95
37 Soldering Components

BEGINNER SOLDERING

INTERMEDIATE SOLDERING

ADVANCED SOLDERING

WE MAKE A GREAT TEAM!

Build, Personalize & Learn
- Robotic & Electronic Kits
- Beginner to Advanced Levels
- Solar & Electricity Kits
- Award Winning Designs

ROBOTIKITS® DIRECT

17141 Kingsview Ave. Suite B
Carson, CA 90746 USA
Phone: (310) 515-1900
Toll Free: (877) 515-6651
Fax: (310) 515-1606
E-mail: robotikitsdirect@pacbell.net
Web: www.robotikitsdirect.com

CIRCLE 256 ON FREE INFORMATION CARD

www.americanradiohistory.com

Enclosed Switching Power Supplies

UL Approved

Single, Dual & Triple Output Models

NOW IN STOCK!

Single Output Supplies

(5V, 12V, 15V, 25V)

25 watt series **AS Low as $20.55 ea.**

60 watt series **AS Low as $27.95 ea.**

150 watt series **AS Low as $42.95 ea.**

Dual Output Supplies

100W, 5V/12V

100W, 5V/24V

...as low as $38.00

50W, 5V/24V

...as low as $27.00ea.

Triple Output Supplies

100w, 5v/12v/-5V as low as $44.00

100w, 5V/12V/-12V as low as $44.00

See Our Web Site for Details

Removable Hard Drive Rack

For IDE/Ultra DMA Hard Drives

We Sold Over 14,000 in 1998!

ONLY $14.95 any qty.

This product can be used with any 3-1/2 IDE hard drive up to 1" high. It includes an electronic keylock for safe removal and insertion. Made of ABS 707 fireproof plastic. Use this product to protect sensitive hard drive data, take your hard drive beween work and home or even set up different users with their own hard drives that they physically insert every time they use a PC. Other models available from C.S.I. include RH10 series and RH20 series, which are interchangeable within the same interface design (IDE or SCSI). *Other Models are Available. See www.web-tronics.com under "hard drive and accessories" for more details and pictures.*

#RH-10C-IDE

Removable Hard Drive Rack with Auto Door And Cooling Fan

ONLY $18.95 any qty.

- Auto door on the outer frame
- ABS material of outer frame, High efficiency cooling fan
- Worldwide patent pulling function handle
- CE Approved
- Coating iron bottom cover
- For IDE interface
- For 1" high 3.5" HDD
- Not compatible with our RH10 & RH20 series. Compatible with our RH17-IDE model.

#MR-27

Details at www.web-tronics.com

2GHz RF Field Strength Analyzer

ONLY $1989

- Frequency Range: 100KHz to 2.060MHz
- Narrow Band FM (NFM), Wide Band FM (WFM), AM and Single Side Band (SSB) Modulated Signals May Be Measured
- PLL Tuning System for Precise Frequency Measurement and Tuning
- LED Backlight LCD (192x192 dots)
- Built-In Frequency Counter
- Hand-Held and Battery Operated
- All Functions are Menu Selected
- RS232C for PC Interface and Printer

#3201

CTRL - D to bookmark this site

www.web-tronics.com

Don't forget the dash

- Easy to Navigate
- Includes a Search Engine That Really Works
- New Items Added Constantly

Circuit Specialists, Inc.

In Business Since 1971

CCD B&W Board Cameras

Detailed Specs on the Web

LOWER PRICES

- *ASIC CCD Area Image Sensor*
- *Extremely Low Power Consumption*
- *0.5 Lux Min Illumination*
- *Built-In Electronic Auto Iris for Auto Light Compensation*

VM1030PA-B 30mmx30mmx25mm, Pinhole lens, 12V $39.00 any qty.

VM1030A 30mmx30mmx26mm, Standard lens, 12V $39.00 any qty.

VM1035A 42mmx42mmx25mm, Standard lens, 12V with back light compensation $49.00 any qty.

VMCB21 44mmx38.5mmx28mm, with 6 infra-red LEDs, 12V $49.00 any qty.

VM1036A 32mmx32mmx25mm, Standard lens, 12V, reverse mirror image feature $49.00 any qty.

Mini CCDs (B/W & Color)

Sensational NEW Design for Small Observation Cameras. *Smaller and Better!*

LOWER PRICES

- *Ultra Miniature Design*
- *Black & White Versions Only 25mm x 25mm*
- *Color Versions Only 32mm x 32mm*
- *Available In Standard Lens or Pinhole Lens*
- *All Include Pre-Wired Cable Harness for Video & Power*
- *12V Regulated Power Supply Required (120mA typical power consumption)*
- *0.1 LUX Rating (B/W), 1 LUX (color)*
- *CCD Area Image Sensor for Long Camera Life*
- *Back Light Compensation Circuit*
- *Built-In Electronic Auto Iris Lens*

Detailed Specs on the Web

VMCW-H11A 32mmx32mmx30mm, Color CCD with standard lens, pre-wired cabling 12V DC Power $139.00/ $129.005 or more

VMCW-H12A 32mmx32mmx19mm, Color CCD with pinhole lens, pre-wired cabling, 12V DC Power Input $139.00/ $129.005 or more

VMPS-718A 25mmx25mmx30mm, B/W CCD with standard lens, pre-wired cabling, 12V DC Power Input $59.00/ $49.005 or more

VMPS-250A 25mmx25mmx15mm, B/W CCD with pinhole lens, pre-wired cabling, 12V DC Power Input $59.00 / $49.005 or more

VCC-3232 32mmx32mmx30mm, CMOS COLOR, std lens, see web for specs $79.00 / $72.005 or more

Bullet CCD Cameras B&W and Color

Detailed Specs on the Web

LOWER PRICES

- *Smart Rugged Metal Housing*
- *Extremely Low Power Consumption*
- *12 Volt*
- *CCD Area Image Sensor for Long Camera Life*
- *Built-In Electronic Auto Iris for Auto Light Compensation*
- *No Blooming, No Burning*
- *0.1 Min Lux Illumination (B&W), 1 Lux Min Lux Illumination (color)*

VMBLT1020 B&W, 21mm(D)x58.5mm(L) $54.00 any qty.

VMBLT1020W B&W Weatherproof, 21mm(D)x58.5mm(L) $79.00 any qty.

VMBLTJC19BW COLOR Weatherproof, 17mm(D)x88mm(L) $139.00 any qty.

COLOR CCD Mini Board Cameras

PRICE REDUCTION

Detailed Specs on the Web

- *Low Power Consumption*
- *1 Lux Illumination*
- *Internal Synchronization*
- *12Volts*
- *400 TV Lines*
- *Built-In Electronic Auto Iris for Auto Light Compensation*

VM3010PA 33mmx33mmx18mm, Pinhole lens $99.00 any qty.

VM3011-A 45mmx40mmx24mm, Standard lens, single board $89.00 any qty.

VM3010-A 33mmx33mmx32mm, Standard lens $99.00 any qty.

BEST DEALS! new!

NOW OFFERING

Dish Network

&

Direct TV

Great Equipment & Service

See Our Website for our

Incredible Offers !

Also Great HDTV Prices!

new! **O'Scope Offer** ONLY $299

30MHz! ONLY $299!

Industries Best Price!

See web for specs

- *Dual Channel*
- *Dual Trace*
- *Vert Trigger*
- *1 Year C.S.I. Warranty!*

#OSC-1030

Manufactured for CSI by a leading O.E.M. manufacturer. See our website for detailed specifications!

new! **DC to AC Power Inverters !**

150 watt up to 3000 watt models !

150w modified sine wave: $29.95 (G-12-015B)

300w modified sine wave: $39.95 (G-12-030)

150w pure sine wave: $69.00 (G-12-150S)

300w pure sine wave: $109.00 (G-12-300S)

800w modified sine wave: $139.00 (G-12-800)

1000w modified sine wave: $179.00 (G-12-100)

3000w modified sine wave(phase corrected). (G-12-300)..... $489.00

Industry Best Pricing!

See Our Website for DETAILED Specs.!

3000 Series Digital R/O Bench Power Supply

AS LOW AS $89

♦Low Cost Single Output ♦3 Amp

High stability digital read-out bench power supply featuring constant voltage and current outputs. Short-circuit protection and current limiting protection is provided. Highly accurate LED accuracy and stable line regulation make the 3000 series the perfect choice for lab and educational use.

Line Regulation: 2x10⁻⁴ +1ma

Load Regulation: 1 x 10-4 +5mv

LED Accuracy: Voltage ±1% +2 digits

Current ±1.5% +2 digits

Wave Line Noise: ≤1mvrms

Dimensions: 291mm x 158mm x 136mm

CSI3003: 0-30v/0-3amp Digital R/O Bench PS, 1x10⁻⁴+5mv Load Regulation

$99.00 5/$89.00

CSI 5003: 0-50v/0-3 amp Digital R/O Bench PS, 1x10-4 +5mv Load Regulation

$129.00 5/$119.00

Our Most Sophisticated DMM

We Sold Over 700 Last Year!

NOW ONLY $149 Reg. $169

with RS-232 Interface & Software, 3-3/4 Digit, 4000 Count, Auto-Ranging with Analog Bargraph

- True RMS Mode
- 10MHz Frequency Counter
- Time Mode with Alarm, Clock, and Stop Watch
- Dual Display
- 10 Location Memory
- Min, Max, Avg and Relative Mode
- Decibel Measurement
- Cap and Ind. Measurement
- Temperature Mode (C/F)
- K-Type Temperature Probe Included
- Pulse Signal for Logic & Audible Test
- Continuity/Diode Test
- Logic Test
- Auto Power OFF/"Keep ON" Mode
- Fused 20A Input with Warning Beeper
- Back Light
- Data Hold/Run Mode
- Safety Design UL1244 & VDE-0411
- Protective Holster
- Silicon Test Leads

More Details on our Web Site

PROTEK 506

www.americanradiohistory.com

Turn Your Multimedia PC into a Powerful Real-Time Audio Spectrum Analyzer

Features

- 20 kHz real-time bandwith
- Fast 32 bit executable
- Dual channel analysis
- High Resolution FFT
- Octave Analysis
- THD, THD+N, SNR measurements
- Signal Generation
- Triggering, Decimation
- Transfer Functions, Coherence
- Time Series, Spectrum Phase, and 3-D Surface plots
- Real-Time Recording and Post-Processing modes

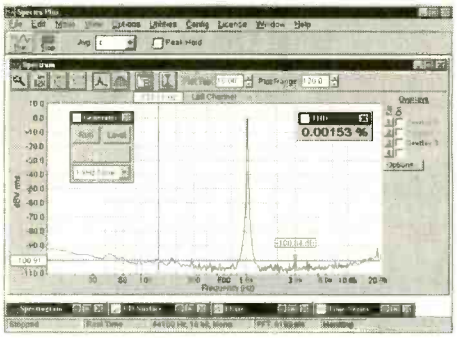

Applications

- Distortion Analysis
- Frequency Response Testing
- Vibration Measurements
- Acoustic Research

System Requirements

- 486 CPU or greater
- 8 MB RAM minimum
- Win. 95, NT, or Win. 3.1 + Win.32s
- Mouse and Math coprocessor
- 16 bit sound card

Priced from $299

(U.S. sales only – not for export/resale)

DOWNLOAD FREE 30 DAY TRIAL!

www.spectraplus.com

PHS Pioneer Hill Software
24460 Mason Rd.
Poulsbo, WA 98370
a subsidiary of Sound Technology, Inc.

Spectra Plus
FFT Spectral Analysis System

Sales: (360) 697-3472 *Fax: (360) 697-7717* *e-mail: pioneer@telebyte.com*

ROBOTS, ROBOTS, ROBOTS...

Robot Kits, Programmable Robots, LEGO® Robots, Living Robots, Muscle Wires®, Home and Office Robots, Electronic Kits & More!

Request our FREE 48 page catalog with over 300 items!

www.RobotStore.com
800-374-5764

Mondo-tronics Inc.
PMB-N, 4286 Redwood Hwy, Dept. 171
San Rafael, CA 94903
ph 415-491-4600 fx 415-491-4696
info@robotstore.com

electronic components

MOUSER ELECTRONICS Catalog 501
(800) 346-6873 www.mouser.com
ONLINE FEATURES
Ordering
Product Search
Catalog
Spec Sheets
Product Availability
sales@mouser.com

1-800-346-6873

MOUSER ELECTRONICS
A TTI COMPANY

www.mouser.com

CIRCLE 205 ON FREE INFORMATION CARD

Call Today And SAVE! **Unbeatable PRICES!**

CABLE TV

DESCRAMBLERS
CONVERTERS • FILTERS
VIDEO STABILIZERS

FREE FREE FREE
➤ 30 Day Trial
➤ Product Catalog
➤ 1 Year Warranty

100% MONEY BACK GUARANTEE

Let us point you in the right direction ...

Arrow Technologies
Omaha, Nebraska

TOLL FREE
1-800-554-ARROW
1-800-554-2776
http://www.arrowtek.com

www.americanradiohistory.com

EZ-EP DEVICE PROGRAMMER - $169.95

Check Web!! -- *www.m2l.com*

Fast - Programs 27C010 in 23 seconds

Portable - Connects to PC Parallel Port

Versatile - Programs 2716-080 plus EE and Flash (28F,29C) to 32 pins

Inexpensive - Best for less than $200

- Correct implementation of manufacturer algorithms for fast, reliable programming.
- Easy to use menu based software has binary editor, read, verify, copy, etc. Free updates via bbs or web page.
- Full over current detection on all device power supplies protects against bad chips and reverse insertion.
- Broad support for additional devices using adapters listed below.

Available Adapters	
EP-PIC (16C5x,61,62x,71,84)	$49.95
EP-PIC64 (62-5,72-4)	$39.95
EP-PIC12 (12C50x)	$39.95
EP-PIC17 (17C4x)	$49.95
EP-51(8751 C51)	$39.95
EP-11E (68HC11 E/A)	$59.95
EP-11D (68HC711D3)	$39.95
EP-16 (16bit 40pin EPROMS)	$49.95
EP-Z8(Z86E02,3,4,6,7,8)	$39.95
EP-SEE2 (93x,24x,25x,85x)	$39.95
EP-750(87C750,1,2)	$59.95
EP-PEEL(ICT22v10,18v8)	$59.95
EP-1051(89C1051,2051)	$39.95
EP-PLCC (PLCC EPROMs)	$49.95
EP-SOIC (SOIC EPROMs)	$49.95
Many Other Adapters Available	

M²L Electronics
970/259-0555 Fax: 970/259-0777
250 CR 218: Durango, CO 81301
CO orders add 7% sales tax.
http://www.m2l.com

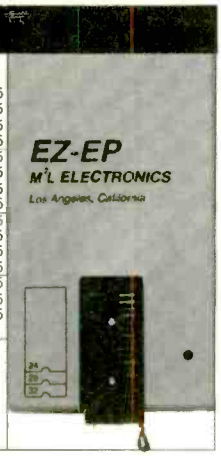

REMOTE CONTROL ANYTHING!
ADD A REMOTE CONTROL TO ANY PROJECT OR EXISTING DEVICE. SEND $15 CHECK OR INTERNATIONAL MONEY ORDER FOR STARTER KIT CONTAINING CHIP SETS AND FULL DETAILS TO:
B.B. ELECTRONICS, P.O. BOX 112
POSTAL STATION CHAMPLAIN,
LASALLE, P.Q. H8P 3H9, CANADA.

Antique Electronic Supply
6221 S. Maple Ave. Tempe, AZ 85283
www.tubesandmore.com
NOS, Parts, Supplies,
Books, Speakers, Transformers,
Grill Cloth, and MORE!
Ph: 480.820.5411•Fax: 480.820.4643 or 800.706.6789

POLARIS CAN SUPPLY YOU WITH ALL OF TODAY'S HOTTEST VIDEO TECHNOLOGY!

CALL OR GO ON-LINE TO ORDER YOUR FREE VIDEO CATALOG - 100's OF PRODUCTS - MICRO CAMERAS - WIRELESS VIDEO - LIPSTICK CAMERAS - DIGITAL VCR's

WEB CAMERA WITH BUILT-IN PAN/TILT/ZOOM CONTROLS

Compact Web Camera For Online Image Monitoring and Delivery Over The Internet

Featuring a built-in Web server, powerful 10x zoom, pan/tilt, and alarm input/output capability, all in an ultra-compact unit. These Web cameras can be installed virtually anywhere and deliver high-quality images to the Internet for real-time monitoring or broadcast. Better yet, these cameras can be controlled and monitored via a standard Web browser, making it ideal for a wide variety of applications.
Size: 122mm x 82mm x 97mm.

- Ultra-compact, all-in-one web camera with built-in web server
- Monitoring and camera control possible via web browser
- 10x optical zoom and multi-angle pan/tilt capability
- 10Base-T interface for direct connection with network
- Alarm In/Out function for automatic surveillance
- Three different security levels

WEATHERPROOF DIGITAL STORAGE CAMERA

The SWC-40R combines a black & white video camera, digital image storage, video motion detection and an alarm interface in a compact, vandal proof enclosure. It is unique as it offers a complete CCTV surveillance system within a single compact enclosure.

- *All-in-one CCTV system*
- *Built-in digital image storage*
- *Programming and image retrieval by remote control*
- *Built-in video motion detection*

NO TAPES!

SWC-40R
$849.95

Dimensions
5" x 4" x 4.5"

"YOUR WEB BROWSER IS YOUR REMOTE EYE!"

FLEXWATCH-100 - CALL$

The FlexWatch acts as an internet camera server. No software needed in order to view your video. All you need is a web browser such as Internet Explorer or Netscape. FlexWatch includes many special functions including video quality control, pan/tilt/zoom interface and network configuration. All of them are controlled by the web browser. Features 4 video inputs - 3 external.

LIVE VIDEO!

CONTROL PAN / TILT AND ZOOM REMOTELY OVER THE INTERNET!

6.4" COLOR TFT-LCD MODULE
TFT MONITORS AVAILABLE FROM 2.5" - 15"

Back Side of Module

HIGH RESOLUTION!

Our new **6.4" Color TFT Module** can be used for a variety of purposes such as; custom automotive dash installations, video phone, door phone, boat installations, covert ultra-compact surveillance packages, security and more.

TFT-64M - $319.95

Dimensions
1.5"(W) x 1.75"(H) x 0.5"(D)

COVERT COLOR SPY CAMERA

It's small sleek indestructible design and pinhole lens allow for various applications and simple installation. Comes equipped with a RCA JACK for easy connection to TV monitor or VCR. Great for covert use in any-place imaginable.

25mm(W) x 17mm(D) *CM-550CP - $79.95*

COLOR & B/W SUBMERGIBLE CAMERAS

CAN SEE UNDER WATER!

B/W version comes with attached 80 meter cable (color-20 meter). Built-in white LED's give this camera a 15 meter infrared range. Heat resistant glass and water resistant design allow for rugged applications.

VIDEO CAMERA HEAD CAN BE SUBMERGED UP TO 100 FEET!

SUBCAM-BW (B/W)- $249.95
SUBCAM-CL (COLOR) - $299.95

-MICRO BOARD CAMERAS- MANY MODELS IN STOCK TO CHOOSE FROM!

MB-1250HRP
Hi-Res Color
Pinhole
5.0mm Lens
1.27" x 1.27"
$109.95

2.4 GHz A/V TRANSMITTING MODULE

Makes any camera wireless! Excellent for hobbyist / remote control airplanes.

2.4GHz 4 channel video transmitting module with audio capability / power switch and antenna.

MPX-2400 - $89.95
2.4GHz RECEIVER GFR-5002 - $119.95

Dimensions
1.5"(W) x 1.75"(H) x 0.5"(D)

WEATHERPROOF CAMERA

Color Camera
400 TV Lines
Automatic Iris

Hi-Res Color Lipstick Camera

Length: 2.6"
Diameter: .785"

WP-300C - $159.95

5" COLOR WIRELESS OBSERVATION SYSTEM

ADD UP TO 3 ADDITIONAL CAMERAS!

Now you can enjoy peace of mind with our new wireless observation system. Comes with 5" wireless color monitor and a wireless color camera. Just Plug-&-Play! Perfect for around the house or office.

2.4GHz

GW-2400S - $379.95

MICRO VIDEO HEAD "SNAKE" CAMERA

Incredibly small micro head color camera incorporates a CCD chipset. (Not CMOS). Fully adjustable focus from 0.5 inches to infinity. Automatic Iris for varying light levels.

VIDEO HEAD IS ONLY 7mm IN DIAMETER!

MH-SCO1
$479.95

← MONITOR UP TO 4 VIDEO CAMERAS SIMULTANEOUSLY THRU YOUR INTERNET CONNECTION OR OVER YOUR MODEM!

MOTION DETECTION - ALARM RECORDING - NOTIFICATION

Video can be viewed in Quad style (above), full screen mode or auto switching mode.

- ✓ TCP/IP
- ✓ MODEM
- ✓ LAN/WAN

Highlight an area on your video screen, and the PV-140 will inform you via modem thru your telephone or pager if there is movement in that highlighted area while recording to your hard disk.

PV-140.....4 Input Digital Video Card.....$299.95

POLARIS INDUSTRIES **800-752-3571** 470 Armour Drive NE • Atlanta GA 30324-3943
Tech 404-872-0722 • Fax 404-872-1038 **WWW.POLARISUSA.COM**

CIRCLE 228 ON FREE INFORMATION CARD

www.americanradiohistory.com

Introducing the New *ATOM* !

More Powerful than the Basic Stamp® 2p

The "ATOM®"

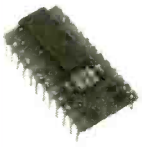

Get more out of your stamp projects! More commands, faster code execution, built in hardware, real time graphical code debugging, no more 2k program size limits, interrupt driven hardware and software features, multitasking, enhanced math capabilities and much more!

The OEM "ATOM®"

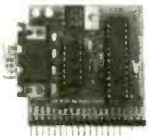

MORE POWER!

The New ATOM is fully pin compatible and software compatible with the Basic Stamp 2p® but with more power and features! Use all your existing hardware and software! **All this for only $59.95 Complete!**

Built in Hardware:
- 3 10 bit A/D Converters
- 2 Capture and Compare
- Internal Adjustable Vref
- + / - External Vref
- 2 PWM
- UARTS
- I2C, SPI
- 3 Timers
- Interrupts External & Internal
- 256 Bytes of Data eeprom
- Over 256 Bytes of RAM

Software Features:
- Free Software
- Graphical Debugging
- More Software Commands
- 32 Bit Integer Math
- 32 Bit Floating Point Math
- Easy to use code editor
- BS2p Compatible Syntax
- Firmware upgradeable
- Unlimited Support
- Free Software Upgrades
- Plus much more!

Visit us online at http://www.basicmicro.com

Basic Stamp is a registered trademark of Parallax Inc.

Order online 24 hours 7 days a week visit http://www.basicmicro.com
Order by phone M-F, 9am to 5pm EST 1-248-426-8144
Master Card • Visa • American Express

Program PICmicros in Basic !

With our easy to use Basic Compiler. Convert easy to write BASIC programs into files that can be directly run on a PICmicro. PICmicro Basic provides a seamless Windows environment, you can write, debug and compile your BASIC program, all with one Windows application! Full Basic Stamp 2 Compatibility ! Starting at $99.95

ISP-PRO Programmer

Program PICmicros, Scenix SX, I2C and Atmel AVR. In circuit or on board! Firmware upgradeable! Includes Windows IDE program softwar! Only $59.95

With optional ZIF adapter PICSTART Plus equivalent only much faster!

PICSTART Plus and PICmicro are registered trademarks of Microchip

40 Pin ZIF Adapter

Intelligent ZIF adapter for the ISP-PRO rev 3.0. Progams all support PICmicros from pin 1! Optional case available for complete unit. Only $69.95

Complete unit with ISP-PRO and Case Only$129.95

Solderless Prototype Boards

The solderless prototyping boards are designed for in-circuit programming. See code changes on-the-fly. Built in auto disconnect circuit allows programming without removing your circuit (w/ ISP-PRO). The 2840 allows 28 or 40 pin PICmicros. The 0818 allows 8 or 18 pin PICmicros. Prototyping has never been easier! Includes RS-232 circuit, regulated power, solderless I/O connector and prototyping area. Starting at only $59.95

Getting Started Kits

Programming PICmicros has never been easier! Kits come with everything to get started! Test code changes on-the-fly without unplugging or switching cables! Starting at $159.95

Kit Shown Includes:
- PICmicro Basic
- 2840 Dev. Board
- ISP-PRO
- Power Supply
- Serial Cable
- 10Mhz Resonator
- PIC16F876

BASIC MICRO INC.

Microcontrollers Made Easy!®

Hackers Goldmine

Worldwyde.com specializing in hard to find information

We Accept: VISA • Master Card • American Express

To Order Call **1-800-773-6698** (M-F 9am to 5pm EST)
Send Money orders to: Worldwyde.Com,
33523 Eight Mile Rd #A3-261, Livonia, MI. 48152

Order online or view our catalog at http://www.worldwyde.com

Electronic Kits & Projects

(Assembled or Kit)

Miniature FM Transmitter	$11.95
FM Stereo Transmitter (Hi-Fi)	$29.95
Deluxe Car Alarm System	$24.95
Digital LED Thermometer	$20.95
16 Melody Generator	$12.95
Telephone FM BUG	$12.95
10 LED Stereo VU-Meter	$13.95
Digital Timer w/ LED Display	$21.95
5 Watt Amplifier	$12.95
50 Watt Stereo Power Amp	$30.95
0 to 30v - 2mA to 1.5A Reg. DC Power Supply	$29.95
5 to 15v - 1A Reg. DC Supply	$15.95
Robotic Voice Imitator	$13.95
Special All Kits Above Only	**$239.95**

Satellite and Cable TV

Satellite Piracy $59.95
Secrets of DISH Vol.2 .. $59.95
Secrets of Free Cable .. $29.95

Satellite and Cable TV piracy is at an all time high! Find out how it is being done in detail and what the Satellite and Cable TV companies are doing about it ! Includes sources. Covers DSS, DISH and Cable TV

Component Shop

PICmicro's starting at	$6.00
Serial Cables Only	$4.95
Power Supply Only	$8.95
Wire Kits Only	$17.95

Misc parts from MAX232, LEDs, Capacitors and more all available at our one stop shop!

Come see our online one stop component shop at http://www.worldwyde.com

Programmers

ALLPIC.....$89.98

Program PIC, ATMEL, SX and serial eeproms. Assembled with 40 pin ZIF

PIC Lite....$39.95
Programs the most popular PICmicros

Smart Card Programmer....$59.95

Programs most ISO7816 Smart Cards. Fully assembled and tested! Easy to use!

PlayStation® 2 Secrets

PlayStation® 2 Secrets $29.95
Learn the secrets of PlayStation® 2 MOD chips and how PlayStation® backups are made.

PSX2 ModChip Source Code $49.95
(Test your own backups)

PSX2 Kit $74.95
(Source Code & PSX2 Book, Plus 1 blank chip)

Books & CD Software

Hackers Anarchy Cook Book 2000	$39.95
Scams&Schemes (3Vol Set)	$24.95
Internet Fraud	$19.95
Identity Fraud	$19.95
Palm Utilities 2001 CD	$14.95
Palm Games 2001 CD	$14.95
Arcade Emulator Heaven 2001 CD	$39.95
Game Cracker CD	$29.95
AAA Credit Secrets	$29.95

Hackers Corner

The Hack & Crack Bible Vol.1	$29.95
The Hack & Crack Bible Vol.2	$39.95
Hack & Crack Master Gold CD Vol.1	$29.95
Hackers Tool Kit CD	$24.95
Forbidden Knowledge Vol.2	$14.95

We offer a wide selection of material on hacking!
Visit us online at http://www.worldwyde.com

www.americanradiohistory.com

PARTS EXPRESS

ELECTRONICS & MORE

www.partsexpress.com

YOUR #1 SOURCE FOR AUDIO, VIDEO AND SPEAKER BUILDING COMPONENTS

FREE 308 PAGE CATALOG

120 Watt Subwoofer Amplifier

Rated power output: 120 watts RMS into 4 ohms at .1% THD. Measured power output: 110 watts RMS into 8 ohms @ 0.1% THD, 156 watts RMS into 4 ohms @ 0.2% THD. Bass boost: 5dB @ 35Hz. Signal to noise ratio: 98dB (A-weighted). Dimensions: 8-1/4" W x 10-5/8" H x 4" D. Enclosure cut out: 7-1/4" W x 9-5/8" H. Voltage: Selectable, 115/230V, 50-60Hz, 335W.

#300-792 ..... **$99.95** EACH

Sound Deadening Sheets

This multi-purpose, noise reduction material actually absorbs the vibration of any solid material. You can reduce interior noise levels 3-10 dB by applying the dampintg sheets to the door panels, firewall, floor pan, trunk lid or any interior sheet metal panel.

Part #	Sheet Dimensions	Price (1-3)	Price (4-UP)
268-010	10" x 10"	$1.35	$1.25
268-015	29" x 32"	11.50	9.95
268-020	32" x 54"	17.90	16.50

Piezo Tweeters

AS LOW AS 95¢ EACH

3-1/4" Piezo Tweeter

- Similar to KSN1005
- Power handling: 50 watts RMS/75 watts max
- Frequency response: 3,500-27,000 Hz
- SPL: 94 dB

#270-011 ..... **$1.25**(1-3) **95¢**(4-UP)

2" x 5" Piezo Horn

- Similar to KSN1016
- Power handling: 50 watts RMS/75 watts max
- Frequency response: 3,500-27,000 Hz
- SPL: 94 dB

#270-041 ..... **$1.25**(1-3) **95¢**(4-UP)

Piezo Horn Mid/Tweeter

- Similar to KSN1025
- Power handling: 60 watts RMS/75 watts max
- Frequency response: 1,800-30,000 Hz
- SPL: 90 dB

#280-062 ..... **$1.60**(1-3) **$1.35**(4-UP)

JBL 12 Watt Stereo Amp Board

Dimensions: 4-1/2" L x 3-1/4" W x 2-1/8" H. Comes with hook-up diagram. Limited availability.

#329-030 ..... **$9.95** EACH

6-1/2" Two-Way System

Great for front or rear speakers in your surround system. The 6-1/2" poly-propylene woofer and 1" textile dome tweeter were specially designed with home theatre in mind.

DLS

#300-036 ..... **$59.95** PAIR

Speaker Surround Repair Kits

Don't throw away expensive loudspeakers just because the foam surround has dry rotted or has been punctured. With these new repair kits from Parts Express, you can save BIG bucks by repairing the foam surround and avoid costly loudspeaker replacements. Each kit contains supplies to repair two speakers and includes foam surrounds, plastic shims, four dust caps (two paper, two poly), a plastic bottle filled with 1 oz. of adhesive, 5 foam swabs for application of glue, and complete repair instructions.

Part #	Size	Price (1-3)	Price (4-UP)
260-915	6-1/2" kit	$19.50	$17.90
260-920	8" kit	21.90	18.95
260-925	10" kit	22.50	19.50
260-930	12" kit	23.90	20.90
260-935	15" kit	24.50	21.90
340-076	1 oz. bottle of speaker glue	5.95	5.25

Note: The speaker surround kit sizes are based on the diameter of the speaker's frame, not the diameter of the cone. For example, if your speaker frame measures 10"-10-1/2" in diameter, you would need the 10" Surround Repair Kit.

Car Amplifier Power Stiffening Capacitors

Capacitors can be wired in parallel to increase value. One year manufacturer warranty.

Specifications: ◆20 VDC/24 VDC surge ◆ESR: < .0015 ohms ◆Tolerance: -10/+50% ◆Temperature range: -40°C to 95°C

Part #	Value	Dimensions (Dia. x Height)	Price
STANDARD POWER CAPACITORS			
268-450	1.0 Farad	3" x 8-5/8"	$69.95
268-455	1.5 Farad	3-1/2" x 8-5/8"	99.90
268-460	2.0 Farad	3-1/2" x 8-5/8"	138.90
DIGITAL DISPLAY POWER CAPACITORS			
268-470	1.0 Farad	3" x 10-1/4"	99.90
268-475	1.5 Farad	3-1/2" x 10-1/4"	138.90
268-480	2.0 Farad	3-1/2" x 10-1/4"	174.90

4" LCD Video Module

Customize your mobile sound system by adding video!

- High resolution
- 4" LCD flat screen color display module
- Works on a standard composite video signal
- Ideal for mounting in seat backs or custom built enclosures

Specifications: ◆12 VDC, 500mA ◆Resolution (dots): 383 (Hor.) x 234 (Vert.) = 89,622 ◆Overall dimensions (mm): 118 W x 85 H x 40 D ◆Active area (mm): 82 W x 60 H ◆Controls for brightness, color and tint ◆Net weight: 3/4 lb.

#205-050 ..... **$99.90** EACH

Woofers

6-1/2" Woofer

◆Power handling: 50 watts RMS/75 watts max ◆Frequency response: 60-3,000 Hz ◆SPL: 86 dB 1W/1m

#290-300 (4 ohm)
#290-305 (8 ohm) **$11.70** EACH

8" Woofer

◆Power handling: 50 watts RMS/75 watts max ◆Frequency response: 60-2,500 Hz ◆SPL: 87.5 dB 1W/1m

#290-310 (4 ohm)
#290-315 (8 ohm) **$12.95** EACH

10" Woofer

◆Power handling: 70 watts RMS/100 watts max ◆Frequency response: 40-2,200 Hz ◆SPL: 87.4 dB 1W/1m

#290-320 (4 ohm)
#290-325 (8 ohm) **$15.95** EACH

12" Woofer

◆Power handling: 70 watts RMS/100 watts max ◆Frequency response: 35-1,500 Hz ◆SPL: 88.6 dB 1W/1m

#290-330 (4 ohm)
#290-335 (8 ohm) **$18.95** EACH

15" Woofer

◆Power handling: 80 watts RMS/115 watts max ◆Frequency response: 27-1,200 Hz ◆SPL: 86 dB 1W/1m

#290-340 (4 ohm)
#290-345 (8 ohm) **$27.95** EACH

LARGEST SELECTION OF SPEAKER DRIVERS IN THE COUNTRY!

Visit Us On The Web At www.partsexpress.com

Or Call Toll Free 1-800-338-0531

725 Pleasant Valley Dr., Springboro, OH 45066-1158 KEY CODE: POM

Phone: 513-743-3000 ◆ FAX: 513-743-1677 ◆ E-Mail: sales@partsexpress.com

CIRCLE 275 ON FREE INFORMATION CARD

www.americanradiohistory.com

$59 PCBs

And our layout software is *FREE*

1. Download our board layout software
2. Design a 2-sided circuit board 2.5" x 3.8"
3. Send us your layout over the Internet
4. We ship you 3 excellent quality boards with plated-through holes for $59 (shipping included)

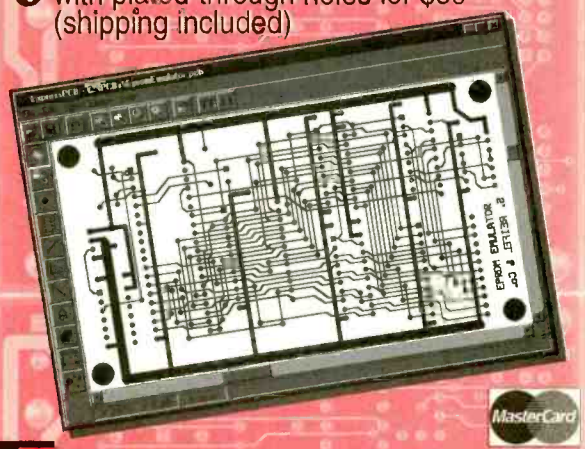

MasterCard VISA

www.expresspcb.com

Start A Career With High Wages, Excellent Benefits and Job Security!!

With UCANDO's extraordinary maintenance training programs you can quickly and easily enter a high paying field as a maintenance technician for a very **small investment of time and money.**

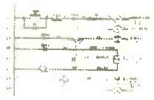

RC-M ONLY $165 RC-M is a 15 hour training course on relay ladder logic systems. Includes a 5-part video and workbook. **Great Value!**

PLC-M ONLY $198 PLC-M is a 32 hour training course on PLC systems. Includes (2) 4-part video's and workbook. **This training is valuable.**

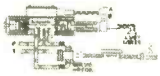

HYD-M ONLY $209 HYD-M is a 32 hour course on Fluid Dynamics. Includes (2) 4-part video's and workbook. **This Module is a must.**

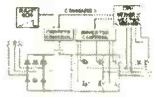

SC-M ONLY $215 SC-M is a 32 hour training course on AC & DC Servo Controllers. Includes (2) 4-part video's and workbook. **Learn everything you need about AC and DC servo Control Systems.**

Electronic Training Videos: Basic Electronics, Digital Electronics, TV Repair, LASER and Fiber Optic training videos available at very affordable prices starting at **Only $35.00 each.**

For information or to place an order call:

1-800-678-6113

www.ucando-corp.com

UCANDO VCR Educational Products Corp., Greenville, OH

ELECTRONIX EXPRESS

Visit Our Website At http://www.elexp.com

WELLER SOLDERING STATION – *MODEL WLC 100*
- Variable power control (5 to 40 watts)
- Replaceable heating element
- Quality light-weight pencil iron

$36.95

LOWEST PRICE 20MHZ

INSTEK OSCILLOSCOPE
MODEL GOS-620
Dual Channel – *20MHZ*
(INCLUDES PROBES)
$299.00

SCOPE PROBE 60 MHZ
SWITCHABLE X1, X10
$12.95

DIGITAL MULTIMETER
32 Ranges – 3½ Digit
MODEL MY-64
AC/DC Volt/Current, Res. Cap., Frequency. Rubber Holster Included
$27.95

INSTEK® FUNCTION GEN. WITH INT/EXT FREQ. COUNTER
3 MHz, Digital Display
MODEL 8216 $199.00

ALLIGATOR LEADS $2.10
SET OF 10

SWITCHES
Mini Toggle SPDT ..... 50¢ ea.

SOLDERING IRON 3-WIRE
HIGH PERFORMANCE
#060501
$5.25

RSR——TELECOMMUNICATIONS TRAINER
HANDS-ON TELEPHONY, LAN, CATV EXPERIENCE WITH ONE SELF-CONTAINED UNIT

T-Comm Trainer (TCM-100)	$199.95
Lab Manual / Work Book	26.95
Component and Supplies Kit	37.95
Tool Kit	119.95

Only $199.95

MODEL TCM-100

SOLDERLESS BREADBOARD
830 tie points. MB102PLT model features 3 binding posts and aluminum backplate.

Part No.	1-9	10+
MB102	5.95	5.00
MB102PLT	8.95	8.00

MOTION DETECTOR
$2 ea. – 10 For $15

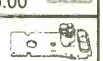

PRESS-N-PEEL

PC Board Transfer Film
PNP Blue 5 Sheet $9.90
PNP Wet 5 Sheet 9.90
PNP Blue 20 Sheet .. 28.95
PNP Wet 20 Sheet ... 28.95

RESISTOR KIT
1/4W 5% film. 5 pieces each of 73 values. 365 pieces total.
$3.95

PAD-234
DIGITAL/ANALOG TRAINER
Complete portable workstation. Variable and fixed power supplies, function generator, digital I/O, rugged design, high impact case.

Assembled $150.00 Kit $110.00

HIGH QUALITY TOOLS
With Cushion Grips and Return Spring

Needle Nose Pliers	Wire Stripper	Diagonal Cutter
$2.95	$1.50	$2.95

DC POWER SUPPLIES
MODEL HY3003 – DIGITAL DISPLAY
Variable output, 0-30 VDC, 0-3 Amp $89.00

MODEL HY3003-3 – TRIPLE OUTPUT
Two 0-30 VDC, 0-3 Amp variable outputs plus 5V 3A fixed. Digital Display.
$215.00

LM555 10 Min.	22¢ ea.
LM741 10 Min.	27¢ ea.
74LS00 10 Min.	18¢ ea.
7805 Regulator 10 Min.	30¢ ea.
2N3904 10 Min.	6¢ ea.
PN2222 10 Min.	6¢ ea.
Red LED T 1¾ 10 Min.	6¢ ea.
Green LED T 1¾ 10 Min.	7¢ ea.
Yellow LED T 1¾ 10 Min.	8¢ ea.
Photo Cell 10 Min.	65¢ ea.
100K Pot, 1" Shaft PC Mt. 10 Min.	15¢ ea.

FREE CATALOG

MORE Low-Priced Items In Our **FREE** *256-Page Catalog*

TERMS: Min. $20 + shipping. School Purchase Orders, VISA, MC, Money Order, Prepaid. NO PERSONAL CHECKS, NO COD. NJ Residents: Add 6% Sales Tax.

In NJ: 732-381-8020
FAX: 732-381-1006

365 Blair Road • Avenel, NJ 07001-2293

800-972-2225

http://www.elexp.com
email: electron@elexp.com

CIRCLE 206 ON FREE INFORMATION CARD

www.americanradiohistory.com

RAMSEY

GET THE CATALOG TODAY!
Over 100 NEW products!
www.ramseykits.com

SYNTHESIZED FM STEREO RADIO STATION

- Synthesized 88 to 108...no drift !
- Built in mixer – 2 line inputs and one microphone input!
- High power module available for export use
- Low pass filter for great audio

Our FM100 is used all over the world by serious hobbyists as well as churches, drive in theaters, and schools. The kit includes metal case, whip antenna and built-in 110 volt AC power supply.

FM100	Super-Pro FM Stereo Radio Station Kit	$249.95
FM100WT	1 Watt, Wired Export Version	$399.95

SYNTHESIZED FM STEREO TRANSMITTER

Professional quality rock stable synthesized transmitter. Dip switch settable for any frequency between 88-108 MHz. Strappable for high power output for export applications. Our most popular kit. Start your own radio station today with the FM25!

FM25	Synthesized FM Stereo Transmitter Kit	$129.95

FM STEREO TRANSMITTER

Great entry level FM broadcast kit. Thousands in use. Handy for sending music through house and yard, ideal for school projects too – you'll be amazed at the exceptional audio quality! Runs on 9V battery or 5 to 15 VDC. Add matching case and whip antenna set for great pro look.

FM10A	Tunable FM Stereo Transmitter Kit	$34.95
CFM	Matching Case and Antenna Set	$14.95
FMAC	12V DC Wall Plug Adapter	$9.95

RF WIRELESS LINK MODULES

- SAW Resonators for high stabillty – NO Drift!
- Powerful +10 dbm output
- Range up to 600'
- 433 MHz license-free band
- Sensitive superhet receiver with RF LNA
- Stable over full 3–12 VDC range
- Optional on-board 12 bit encoder/decoder using Holtek HT12 series chips, Quarter not included!

RXD433	433 MHz Receiver/Decoder Mod., Assembled	$26.95
TXE433	433 MHz Transmitter/Encoder Mod., Assembled	$24.95
RX433	433 MHz Data Receiver Mod., Assembled	$21.95
TX433	433 MHz Data Transmitter Mod., Assembled	$19.95

THE CUBES! MINIATURE VIDEO TRANSMITTERS

Wireless crystal clear reception, yet smaller than a quarter! Transmits color or B&W with fantastic quality almost like a hard wire connection to any TV or VCR tuned to cable channel 59. Crystal controlled for no frequency drift with performance that equals law enforcement models that cost hundreds more! Basic 20mW unit goes up to 300' while the high power version can virtually double that range! Fully assembled and tested, and ready to go. Powered by a standard 9V battery. Name that Quarter!

C2000	Video Cube, Factory Assembled & Tested	$89.95
C2001	High Power Version, Assembled & Tested	$129.95

INFRA-RED VIDEO CAMERA ILLUMINATOR

Lets video cameras "see in the dark". Invisible light source to us, but lots of light to CCD B&W cameras! Illuminates the area just like light, yet cannot be seen. Draws 180mA at 12 VDC. 110VAC power adapter available.

IR1	Infra-Red Camera Illuminator Kit	$24.95
AC125	12VDC Power Supply	$9.95

ELECTRONIC PROTOTYPING SOFTWARE

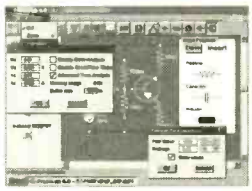

Priced for the hobbyist!
You can create and test AC and DC circuits minutes after installing this package on your PC. Start from scratch, or from the included library of pre-designed circuits. Drag and drop placement from a complete list of active and passive components. Test using a complete list of virtual instruments, Oscilloscope, voltmeter, ohmmeter, ammeter, and watt meter.

PLAB4	Electronic Prototype Software, Win95/98	$49.95

ANALOG-DIGITAL PORTABLE LAB STATION

The COMPLETE analog-digital lab station in one. Includes function generator, clock output, power supplies, level switches, pulsers, pots, LEDs and a LARGE breadboarding area all in one! Includes a custom molded case as shown. Used through the world at universities, technical schools, and R&D labs. Available in "Learn as you Build" kit form or factory assembled and tested. A great buy either way!

ML200	Lab Station, Kit	$155.95
ML200WT	Lab Station, Factory Assembled & Tested	$225.95

CABLE WIZARD CABLE TRACER

Did you ever have to identify the "other end of that cable"? No more "ohming it out" with the Cable Wizard. Simply connect the wizard transmitter to one end of the cable and use the receiver to sniff out the other end. It's as simple as that! The transmitter sends a pulsating 2 KHz signal down the cable which is heard when the receiver is close to the cable. Works with any cable including coax, telephone pairs, ethernet and more. Equipped with an RJ45 for all telco connections and clip leads for single wire connections.

WCT20	Wireless Cable Tracer Kit	$39.95
CWCT	Matching Case Set for Transmitter & Receiver	$29.95
WCT20WT	Factory Assembled & Tested WCT20	$99.95

SPEEDY PERSONAL SPEED RADAR GUN

This low cost microwave radar uses the same principle found in police units costing thousands more. This has been the number one Science Fair project for years. Direct digital readout in miles/hour, kilometers/hour, or feet/second. An earphone jack allows you to actually hear the Doppler frequency shift of moving objects. Our detailed manual not only guides you through constuction, but covers the how's and why's of speed radar theory. Learn while you build. Uses two 13 oz coffee cans for the antenna (not included) and runs on 12 VDC.

SG7	Speedy Personal Speed Radar Kit	$99.95
AC125	12VDC Power Supply	$9.95

AND...OUR FAMOUS *MINI-KITS*

These are easy to build kits that can be used either stand alone or as building blocks for more complex projects.

TS4	Tickle-Stick Shocker	$9.95
BN9	Super Snoop Amplifier Kit	$8.95
BL1	LED Blinky Kit	$3.95
TD1	Tone Encoder/Decoder Kit	$6.95
TT7	Touch Tone Decoder Kit	$29.95
CPO3	Code Practice Oscillator Kit	$9.95
UT5	Universal Timer Kit	$8.95

RAMSEY ELECTRONICS, INC.
793 Canning Parkway
Victor, NY 14564
716-924-4560
sales@ramseykits.com

Order Today! 800-446-2295
www.ramseykits.com

CIRCLE 263 ON FREE INFORMATION CARD

www.americanradiohistory.com

Home Automation

World's Largest Source for Home Automation!

- Voice Control
- Gadgets & Motorized Devices
- Home Theater
- Phones & Intercoms
- X10 & Lighting Control
- Home Security & Surveillance
- Home Networking & Structured Wiring

and Much More...

800-SMART-HOME
www.smarthome.com
Free 144 pg. Color Catalog!
Dealers/Resellers ask about our SmartHome PRO Dealer Program 800-949-6255

SERIAL LCDs

Serial LCDs work great with BASIC Stamps® and other microcontrollers. One-wire interface • simple serial protocol • low cost • high quality • in stock

BPI-216N
- 2x16 text LCD
- 2400/9600 bps
- $45 (non-backlit)

SGX-120L
- Mini graphics LCD
- 2400/9600 bps
- just $99

Many other models available—see www.seetron.com!

Scott Edwards Electronics, Inc.
www.seetron.com • 520-459-4802

Reliability

TiePieScope HS801 PORTABLE MOST

50 MHz ARBITRARY WAVEFORM GENERATOR-
100 MHz STORAGE OSCILLOSCOPE-
50 MHz SPECTRUM ANALYZER-
6 DISPLAY MULTIMETER-
200 DAYS TRANSIENT RECORDER-

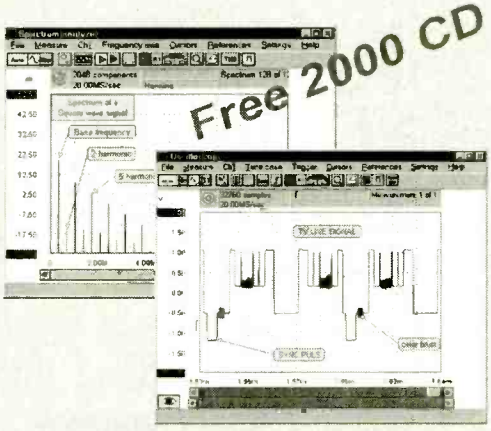

The HS801: the first 100 Mega samples per second measuring instrument that consists of a MOST (Multimeter, Oscilloscope, Spectrum analyzer and Transient recorder) and an AWG (Arbitrary Waveform Generator). This new MOST portable and compact measuring instrument can solve almost every measurement problem. With the integrated AWG you can generate every signal you want.

A user defined toolbar with which over 50 instrument settings quick and easy can be accessed is offered by the versatile software. An intelligent auto setup allows the inexperienced user to perform measurements immediately. Through the use of a setting file, the user has the possibility to save an instrument setup and recall it at a later moment. The setup time of the instrument is hereby reduced to a minimum.

Analyzing signals is done with an 8 bit resolution and a maximum sampling speed of 100 MHz. The input range is 0.1 Volt full scale to 80 Volt full scale. The record length is 32K/256K samples. The AWG has a 10 bit resolution and a sample speed of 25 MHz.

Convince yourself and download the demo software from our web page: ***www.tiepie.nl***. When you have questions and / or remarks, contact us via email: support@tiepie.nl. The HS801 is delivered with a user manual, two probe's, Windows and DOS software.

US dealer:
Feedback Incorporated: Tel 800-526-8783; Fax 919-644-6470; www.fbk.com

Outsite US:
TiePie engineering, P.O. BOX 290, 8600 AG SNEEK, The Netherlands.
Tel: +31 515 415 416 Fax: +31 515 418 819
Web: www.tiepie.nl

Thanks to you, all sorts of everyday products are being made from the paper, plastic, metal and glass that you've been recycling.

But to keep recycling working to help protect the environment, you need to buy those products.

BUY RECYCLED.

AND SAVE.

So look for products made from recycled materials, and buy them. It would mean the world to all of us.

For a free brochure, write *Buy Recycled*, Environmental Defense Fund, 257 Park Ave. South, New York, NY 10010, or call 1-800-CALL-EDF.

EDF
EPA

CIRCLE 217 ON FREE INFORMATION CARD

www.americanradiohistory.com

New and Pre-Owned Test Equipment

New Equipment Specials

B+K Precision 2120B – 30MHz Oscilloscope

* FREE Model 117B Multimeter
* 2 Channel, Dual-Trace
* 30 MHz Bandwidth
* TV Triggering
* (2) Probes Included

Sale Price $339.00

AVCOM PSA-37D – Spectrum Analyzer

Satellite Downlink – Installation – Maintenance & Service

* Band 1: 10 – 1750 MHz
* Band 2: 3.7 – 4.2 GHz
* Carrying Case Included
* Line or Battery Powered
* Built-in DC Block & Power for LNA/LNB's

Sale Price $2,395.00

Instek GOS-6103 – 100 MHz Analog Oscilloscope

- 100 MHz Bandwidth
- 2 Channel, High Sensitivity
- TV Trigger - Signal Output
- Cursor Readout
- Time Base Auto-range
- (2) Probes Included
- 2 Year Warranty

Sale Price $899.00

Leader LF 941 – CATV Signal Level Meter

- TV/CATV Coverage from 46 - 870 MHz
- Video/Audio Carrier Measurements

Sale Price $489.00

NEW! Fluke 187 – Digital Multimeter

- Basic DC Accuracy of 0.025% at 50,000 Count
- True-RMS AC, AC+DC, dBm, & dBV

Sale Price $319.00

Pre-Owned Oscilloscope Specials

Tektronix	465	100 MHz	$499.00
Tektronix	465B	100 MHz	$649.00
Tektronix	475	200 MHz	$749.00
Tektronix	475A	250 MHz	$949.00

- Professionally Refurbished
- Aligned & Calibrated to Original Specifications
- The Industry Standard of Oscilloscopes
- *1 Year Warranty* - The Longest Available!!!
- See Website for Complete Specifications

See us on the Web!
www.testequipmentdepot.com

We Buy Surplus Test Equipment

Test Equipment Depot
A FOTRONIC CORPORATION COMPANY
99 Washington St. Melrose, MA 02176
(781) 665-1400 • FAX (781) 665-0780
e-mail: sales@testequipmentdepot.com

VISA MasterCard AMEX C.O.D.

(1-800-996-3837)
TOLL FREE 1-800-99-METER

CIRCLE 322 ON FREE INFORMATION CARD

The Pocket Programmer

The Best just got Better!!!

The Best portable programmer that uses the printer port instead of an internal card just got Better!! Now with easier to use Windows based software that programs E(E)prom, Flash & Dallas parts. 25/27/28 & 29 series from 16K to 8Mbit. Adapters available for MCU's 874X, 875X, Pic, Atmel, PLCC packages, Bi-Prom's, 40-Pin X16 Eproms, Rom Emulator to 32K X 8 (2716-27256) and More...

Only $149.95

Same Name, Address & Phone # for 19 Years.... Isn't it Amazing ?

Intronics, Inc.
Box 13723 / 612 Newton St.
Edwardsville, KS 66113
Tel. (913) 422-2094 **Add $7.00 COD**
Fax (913) 441-1623 **Add $6.00 Shipping**
WWW.IN-KS.COM Visa/MC/Amex/Disc

FOR BEGINNERS — But Practical

AN EASY TO READ NEW BOOK:

The ideal way to catch up. It starts with 8th-grade science basics, going all the way up to industrial applications like motor controllers, sensors, and noise suppression. Covers oscilloscopes (fully detailed instructions), desirable and undesirable oscillations, simplified circuits for bipolar and FET transistors, flip-flops and square waves, op-amps, SCRs & Triacs. Covers "PID" controls, ground loops, shields versus "guards," soldering, and brief sections on lasers, laser printers, photocopiers, radios, digital vs. analog. Symbols explained include U.S. electrician and European.

(See www.amazon.com reviews!)

"Industrial Electronics for Engineers, Chemists, and Technicians, with Optional Lab Experiments"

By Daniel J. Shanefield
ISBN 0-8155-1467-0

William Andrew Publishing
13 Eaton Ave.
Norwich, NY 13815
www.williamandrew.com
$72.00 postpaid

MECI
340 East First Street
Dayton, Ohio 45402
Your Electronics Value Company

Tons of Electronics

Get your FREE catalog today and discover some of the best deals in electronics. We have thousands of items ranging from unique hard-to-find parts to standard production components. Call, write or fax today to start your subscription to one of the most unique catalogs in the industry, filled with super values on surplus electronic and hobbyist type items.

Checkout our 10,000 item on-line catalog http://www.meci.com

Order Toll Free 1-800-344-4465
Why pay more? Call today!
Fax Order Line 1-800-344-6324

CIRCLE 323 ON FREE INFORMATION CARD

www.americanradiohistory.com

ALL ELECTRONICS CORPORATION

Two Speed Worm Gear Motor

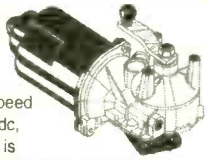

Powerful windshield wiper motor for 2000-2001 Saturn L series automobiles. Two speeds; high speed is 106 RPM at 12 Vdc, 4 Amps. Low speed is 41 RPM at 12 Vdc, 0.91 Amps. 3/8" threaded drive shaft with nut. A 2.25" lever with a universal joint, attached to the shaft, is easily removable. 7" overall length x 3.5" x 4".

CAT # DCM-171 $19.75 each

Rechargeable Battery

Eveready # NH22. Nickel Metal Hydride rechargeable battery. Replaces 9 Volt batteries in many applications. Actual voltage 7.2 Volts. Can be charged in most Nickel-cadmium chargers.

CAT# NMH-9 $3.50 each

Miniature DC Motor

Mabuchi # FF-N20PN Miniature 1.5 to 3 Volt DC motor. Ideal for modelsand radio control applications where small size is important. No load rating: 15,800 RPM @ 2.4 V, 96 mA. Length (excluding shaft), 0.654" long x 0.47" x 0.39". 0.039"(1mm) dia. x 0.13" long shaft. Solder-loop terminals. Large quantity available.

CAT# DCM-166

2 for $1.50

150 for 60¢ ea.
600 for 50¢ ea.
1500 pieces 35¢ ea.

Solar Panel

Output: approx. 3 Volts @ 40 mA. 2.40" square x 0.13" thick epoxy-encapsulated silicon photovoltaic panel removed from solar lighting system. Solid, almost -unbreakable module with easy-to-solder spots on backside. Ideal for solar-powered battery chargers and other projects.

CAT # SPL-60 $3.50 each

ORDER TOLL FREE
1-800-826-5432
SHOP OUR ONLINE STORE
www.allelectronics.com
CHARGE ORDERS to Visa, Mastercard, American Express or Discover

TERMS: *NO MINIMUM ORDER.* Shipping and handling for the 48 continental U.S.A. $5.00 per order. All others including AK, HI, PR or Canada must pay full shipping. All orders delivered in CALIFORNIA must include local state sales tax. Quantities Limited. NO COD. Prices subject to change without notice.

CALL, WRITE FAX or E-MAIL for our *FREE* 96 Page CATALOG
Outside the U.S.A. send $3.00 postage.

MAIL ORDERS TO:
ALL ELECTRONICS CORPORATION
P.O. Box 567
Van Nuys, CA 91408
FAX (818)781-2653
e-mail allcorp@allcorp.com

VISION ELECTRONICS

- No Rolls/Jitters/Flickers/Fading
- Works on all TV's, VCR's, Beta, & Cable
- Gold Video Connectors & Cables Included
- 1 Year Warranty
- Money Back Guarantee

FREE CATALOG!

COPY RENTAL TAPES WITH OUR VIDEO STABILIZER

1-800-562-2252

2609 S. 156th Circle • Omaha, NE 68130
www.modernelectronics.com

Build Your Own Intelligent Robot, We Make It Easy!

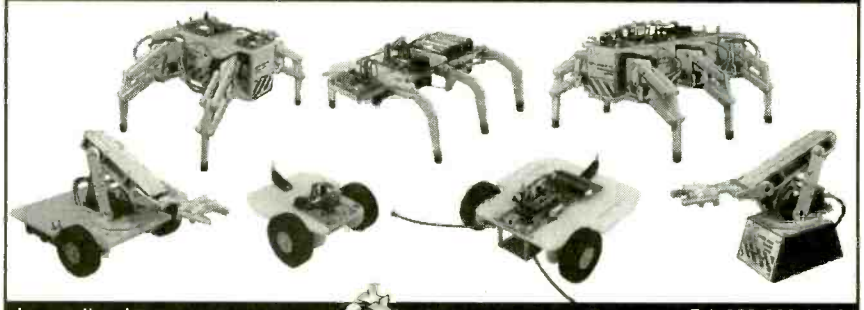

Lynxmotion, Inc.
PO Box 818
Pekin, IL 61555-0818
www.lynxmotion.com

Lynxmotion
Visit our website or ask for our free catalog!

Tel: 309-382-1816
Fax: 309-382-1254
sales@lynxmotion.com
tech@lynxmotion.com

Data Acquisition and Control

The ADR series of interfaces allow control of analog, digital and relay I/O via RS232 or RS485. Visit the web site for specs, applications and programs in VB, C, BASIC etc. (705) 671-2652

www.ontrak.net
Ontrak Control Systems Inc.

"X-Ray" Filters, Cameras, Camcorders, Lights

Infrared (IR) Equip sees through some fabrics!
2 Million Candle Power Rechargeable IR Spotlight
NEW! Mini Metal/Wood Lathe, Mill, Drill, Sander
Ultraviolet (UV) LED Flashlights, Invisible Inks
SpyCams, Specialty Optical Products
Home Automation Software, Free Fax Software

www.MaxMax.com

CLASSIFIEDS

BUSINESS OPPORTUNITIES

$400 WEEKLY ASSEMBLING Electronic Circuit Boards/Products From Home. For Free Information Send SASE: Home Assembly-PT Box 216 New Britain, CT 06050-0216.

Do You Know How to Fix a Computer or Printer? Get started in the lucrative repair business with a guide to the repair business for $34.95. Call 800-557-2349.

CABLE TV

CABLE TV Descramblers. One-piece units. Scientific Atlanta, Jerrold, Pioneer, and others. Lowest Prices Around. **Precision Electronics** Houston,TX Anytime. 1-888-691-4610

DESCRAMBLERMANIA! SAVE 80% ALL UNIVERSAL CABLE DESCRAMBLER CONVERTER MODELS! INDIVIDUAL AND BULK SALES! 1-800-246-0434 **www.cableboxcentral.com**

MISC. ELECTRONICS FOR SALE

T&M ELECTRONICS. Large variety of electronic parts since 1966. Visit our Web site at www.tandmelectronics.com

SATELLITE EQUIPMENT

FREE Satellite TV Buyer's Guide. Best Products – Lowest Prices – Fastest Service! Dish Network, DirectTV, C/Ku-band, including 4DTV. Parts– Upgrades – Accessories! **SKYVISION** - 800-543-3025. International 218-739-5231. www.skyvision.com

Poptronics® SHOPPER

www.americanradiohistory.com

FORT777. COM : THE BEST IN ELECTRONICS ANYWHERE IN THE GALAXY

File Edit View Go Help

Back Forward Reload Home Search Shop Fort777

Bookmark Location http://www.fort777.com

LOG ON TO FORT777.COM

Come & Visit Fort777.com Now!

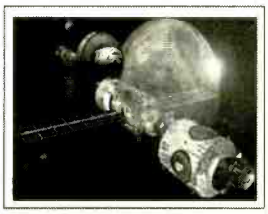

Come and take a look at all the great products we've got for you at Fort777.com - and they're all at incredibly low prices even if you only want one piece. Just click Product Index to find all the things you need. While you're there take a look at the Novel and read all about the Fort777 of the future. Make Fort777 your first choice and start saving NOW!

Only Top Quality Components

You can rely on the components you'll get from Fort777.com. We only buy direct from the best factories. All our components are fully specified and are the same each time you buy. You can pay much more for these very same items by buying from our competitors. But if you want the best parts at the best prices, come to Fort777. The choice as always is yours.

Low Cost Movies That Play On Your DVD Player

Never before sold in US, but now you can buy near-DVD quality video CDs that will play on your DVD player. We've got lots of the latest movies, top movies released over the last few years and classics. Prices are around one third the regular price for DVDs. These discs are 100% legal product, produced under license from the studios. Visit Fort777.com and find out more about how we can do it and check out all your favorite movies.

Electronic Components

When you want electronic components, visit Fort777.com. We've got large ranges of all the most popular items you'll need. Check out our Resistors, Capacitors, Connectors, Relays, Potentiometers, Fuses, LEDs, Neons, Lampholders, Diodes, Rectifiers, Crimp Terminals, Suppressors, Buzzers, Fuseholders, Clips, Audio, Computer and Telephone Cords and much, much more.

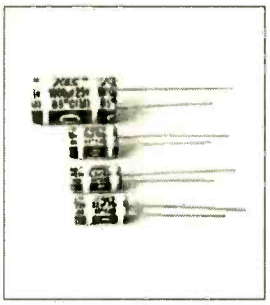

We've got specialty items as well and our range is growing all the time. Take a look at our special offers and click on Star Buys to see our latest hottest items. There are lots of new things happening all the time at the new Fort777.com so come back and visit us regularly then you won't miss any of our great specials. With our low prices you can buy for your friends and save on freight costs. Orders over US$150 we pay the freight.

It's All At Fort777.com

When you need the best quality components and the best prices, you need to visit Fort777.com. Use the menu buttons, search function or index to quickly find the parts you need. Every item has a color picture and full description, specification and drawing if it's pcb mounted. So now you can check out all the specs on line to find the exact part you need. Just click on More Info to see all the details and don't forget to scroll right to the bottom of the page to see the entire specification. In the More Info product screen, you will see a large picture of the product so that you can be absolutely certain that you've got the exact item you need. Take a look at Fort777 right now!

ITEMS SHOWN HERE AND ON THE WEBSITE HTTP://WWW.FORT777.COM ARE ONLY AVAILABLE FROM THE WEBSITE

No minimum order quantity. Prices are valid for one piece/pack. Freight charged extra.
*The address below is for returns and servicing:

FORT777.COM NORTH AMERICAN SERVICE AGENTS, FRONTIER ENGINEERING
628 S. SUNSET ST., LONGMONT, CO 80501 * email: sales@fort777.com

www.americanradiohistory.com

PIC'n Books

LEARN ABOUT PIC MICROCONTROLLERS

See Table Of Contents: http://www.sq-1.com
Secure Online Ordering Is Available

PIC is a trademark of Microchip Technology Inc.

SQUARE 1 ELECTRONICS

Voice (707) 279-8881 Fax (707) 279-8883

http://www.sq-1.com

RF Data Modules

AM Transmitter

- Sub Miniature module
- SAW Controlled
- No adjustable components
- Low current - 2.5mA
- Supply 2.5-12Vdc
- 418MHz or 433MHz
- Range up to 300ft
- CMOS TTL data input
- 7 x 11 x 4mm !

AM-TX1-xxx $12.60

AM Receiver

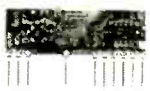

- Compact Hybrid Module
- Very stable
- CMOS/TTL output
- Patented Laser Trimmed
- 5Vdc, 0.8mA (HRR6)
- 2kHz data rate
- Sensitivity -105dBm
- 38 x 12 x 2 mm

AM-HRR6-xxx... $16.33

FM Transceiver

- Only 23 x 33 x 11mm
- Up to 40,000bps data rate
- Up to 450ft. range.
- 5V operation
- 418MHz or 433MHz FM
- 5V CMOS logic interface
- Fast 1mS enable
- Power saving feature
- Carrier Detect output

BiM-xxx-F $87.36

RS232 Transceiver

- 3wire RS232 interface
- 19.2Kbps half duplex
- 418MHz or 433MHz FM
- 7.5-15Vdc, 20mA
- TX/RX Status LED's
- Up to 400ft. range
- 1/4 wave ant. on board
- User data packetizing
- 58 x 40 x 15mm

CYPHERNET $139.30

AM Transmitter

- Range up to 250ft.
- SAW controlled stability
- Wide supply range 2-14V
- CMOS/TTL input
- Low current, 4mA typ.
- Up to 4kHz data rate
- Small: 17 x 11mm

AM-RT5-xxx $12.10

ABACOM TECHNOLOGIES

Free Catalog

tel: (416)236 3858
fax: (416)236 8866
www.abacom-tech.com
MasterCard / VISA

CONTROL
RELAYS • LIGHTS • MOTORS

MEASURE
TEMPERATURE • PRESSURE • LIGHT LEVELS • HUMIDITY

INPUT
SWITCH POSITIONS • THERMOSTATS • LIQUID LEVELS

MODEL 30 ..... $79

- PLUGS INTO PC BUS
- 24 LINES DIGITAL I/O
- 8 CHANNEL-8 BIT A/D/ IN
- 12 BIT COUNTER
- UP TO 14K SMP/SEC

MODEL 45 ..... $189

- RS-232 INTERFACE
- 8 DIGITAL I/O
- 8 ANALOG INPUTS
- 2 ANALOG OUTPUTS
- 2 COUNTERS-24 BIT

MODEL 100 ..... $279

- 12 BIT 100 KHZ A/D
- 4 ANALOG OUTPUTS
- 3 TIMER COUNTERS
- 24 DIGITAL I/O

MODEL 150-02 .... $179

- RS-232 INTERFACE
- TRMS, 20 AMPS
- 12 BIT A/D
- OPTO-ISOLATED
- COMPLETE DMM

MODEL 40 ..... $109

- RS-232 INTERFACE
- 28 LINES DIGITAL I/O
- 8 ANALOG INPUTS
- PWM OUTPUT

MODEL 70 ..... $239

- RS-232 INTERFACE
- 10 BIT A/D
- 5.5 DIGIT
- UP TO 60 SMP/SEC

Prairie Digital, Inc.

PHONE 608-643-8599 • FAX 608-643-6754

920 SEVENTEENTH STREET • PRAIRIE DU SAC, WISCONSIN 53578

Microprocessor
Hands-On Training

The PRIMER Trainer is a flexible instructional tool featured in a Prentice Hall textbook and used by colleges and universities around the world. Ruggedly designed to resist wear, the PRIMER supports several different programming Languages including Assembler, Machine Language, C, BASIC, and FORTH. A comprehensive Instruction Manual contains over 25 lessons with several examples of program design and hardware control. The Applications Manual provides theory and sample code for a number of hands-on lab projects.

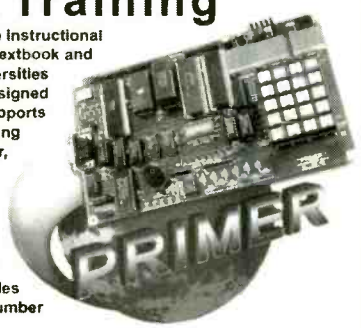

Application Projects Include:

- Scan Keypad Input & Write to a Display
- Detect Light Levels with a Photocell
- Control Motor Speed using Back EMF
- Design a Waveform Generator
- Measure Temperature
- Program EPROMs
- Bus Interface an 8255 PPI
- Construct a Capacitance Meter
- Interface and Control Stepper Motors
- Design a DTMF Autodialer / Remote Controller

The PRIMER can be purchased as an unassembled kit ($120) or as an assembled/tested kit ($170). Upgrades provide battery-backed RAM and PC connectivity via an RS232 serial port (shown in picture). Additional options include a heavy-duty keypad (shown in picture) and a 9V power supply -- see our website. Quantity discounts are available. Satisfaction guaranteed.

Since 1985 OVER 16 YEARS OF SINGLE BOARD SOLUTIONS

EMAC, inc.

Phone 618-529-4525 Fax 618-457-0110
2390 EMAC Way, Carbondale, Illinois 62901
World Wide Web: http://www.emacinc.com

CIRCLE 219 ON FREE INFORMATION CARD

www.americanradiohistory.com

Gernsback Publications, Inc.

275-G Marcus Blvd. Hauppauge NY 11788

POPTRONICS®
CLASSIFIED ADVERTISING ORDER FORM

Advertiser Information

Name

Company

Street Address

City/State/Zip

Telephone ( )

Signature (required on all orders)

Payment Information

Charge my:

☐ Master Card ☐ Visa ☐ Discover

Account No.

Exp. Date

☐ Full payment enclosed. Prepayment discounts offered for multiple insertions (except on credit card orders).

☐ Payment for first insertion enclose; additional payments will be made prior to closing dates. Prepayment discounts not available.

Do you want any special options? (where available)

☐ Boldface Type* Add 25% for entire ad ☐ Screened Background – Add 30%

☐ Special Heading – Add $35.00

The first word of your ad and your name will be printed in boldface caps, at no additional charge.
For individual boldface words, add .50¢ each.

In what month(s) would you like your ad to run?

☐ Entire year for publications selected above.

☐ Jan. ☐ Feb. ☐ Mar. ☐ Apr. ☐ May. ☐ June ☐ July ☐ Aug. ☐ Sep. ☐ Oct. ☐ Nov. ☐ Dec.

Here's how to calculate the cost of your Regular or Expanded-Ad Classified:

Rate X Numbers of Words + Rate for Boldface + Rate for Screened Background = Cost per Insertion X Number of Months = Cost

Magazine	Rate	x	Number of Words (min. 15)	+ Boldface (add 25%)	Screened + Background (add 30%)	Cost Per = Insertion	x	Number of Months	=	Cost
		x		+	+	=	x		=	

Rates:

$3.50 per word

Minimum 15 Words

Here's how to calculate the total cost of your advertising:

Prepayment Discount:

(Full payment must accompany order, not applicable on credit card orders)

Prepay for ☐ 6 insertions in one magazine, 5% ☐ 12 insertions in one magazine, 10%

Subtotal _____

Less Prepayment Discount _____

TOTAL COST $ _____

Please use a separate piece of paper to write your copy, or for any special instructions you may have.

HAVE A QUESTION? CALL: 1-631-592-6720 ext. 206

Fax signed orders with credit card information to : (631) 592-6723

GPI895

www.americanradiohistory.com

ADVERTISING INDEX

Poptronics does not assume any responsibility for errors that may appear in the index below.

Free Information Number		Page
–	Abacom	88
–	All Electronics	86
–	Amazon Electronics	68
–	Andromeda Research	74
–	Antique Electric Supply	79
–	Arrow Technologies	78
–	B.B. Electronics	79
–	Black Feather Electronics	68
290	C&S Sales, Inc.	72
–	Carl Taylor Inc.	68
233	Circuit Specialists	77
–	CLAGGK, Inc.	CV3, 10
320	Cleveland Inst. of Electronics	71
321	Command Productions	67
–	Conitec Data Systems	74
–	Consumertronics	69
–	C-Tech Industries	74
–	Designtech Engineering Co.	67
–	EDE Spy Outlet	69
–	Elect. Tech. Today	22, 42, 65
130	Electronic Workbench	CV4
–	Electronix	74
206	Electronix Express	82
–	EMAC Inc.	88
–	Engineering Express	82
–	Fort777.com	87
–	Global Specialties	67
–	Globaltech Distributors	69
220	Information Unlimited	76
–	Intec Automation	69
–	Intelligence Here	69
–	Intronics	85
–	IVEX Design	75
139	Jameco	CV2
–	LDP LLC	86
–	LT Sound	15
–	Lynxmotion	86
–	M^2L Electronics	79
324	MCM Electronic	66
323	Mendelsons	85
296	Merrimack Valley Systems	70
–	microEngineering Labs	69
–	Modern Electronics	74
–	Mondo-tronics	78
205	Mouser Electronics	78
–	MyLydia	68
–	Ohio Automation	69
–	Ontrak Control Systems	86
–	PAIA Electronics	68
275	Parts Express	81
–	Pioneer Hill Software	76
228	Polaris Industries	79
219	Prairie Digital	88
–	RC Distributing Co.	68
263	Ramsey Electronics	83
256	RobotiKits Direct	76
–	Scott Edwards Electronics	84
–	Scrambling News	69
–	Smarthome.com	84
–	Square 1 Electronics	88
–	Techniks	69
–	Technological Arts	74
322	Test Equipment Depot	85
217	Tie Pie Engineering	84
–	UCANDO Videos	82
–	Vision Electronics	86
–	Walter Malecki	68
–	William Andrew Publishing	85
–	World Wyde	68, 80

ADVERTISING SALES OFFICES

Gernsback Publications, Inc.
275-G Marcus Blvd.
Hauppauge, NY 11788
Tel. 631-592-6720
Fax: 631-592-6723

Larry Steckler
Publisher (ext. 201)
e-mail: advertising@gernsback.com

Adria Coren
Vice-President (ext. 208)

Ken Coren
Vice-President (ext. 267)

Marie Falcon
Advertising Director (ext. 206)

Adria Coren
Credit Manager (ext. 208)

For Advertising ONLY
EAST/SOUTHEAST

Marie Falcon
275-G Marcus Blvd.
Hauppauge, NY 11788
Tel. 631-592-6720 x206
Fax: 631-592-6723
e-mail: mfalcon@gernsback.com

MIDWEST/Texas/Arkansas/ Oklahoma

Ralph Bergen
One Northfield Plaza, Suite 300
Northfield, IL 60093-1214
Tel. 847-559-0555
Fax: 847-559-0562
e-mail: bergenrj@aol.com

PACIFIC COAST

Megan Mitchell
9072 Lawton Pine Avenue
Las Vegas, NV 89129-7044
Tel. 702-240-0184
Fax: 702-838-6924
e-mail: mmitchell@gernsback.com

Subscription/ Customer Service/ Order Entry
Tel. 800-827-0383
7:30 AM - 8:30 PM CST

www.poptronics.com

www.americanradiohistory.com

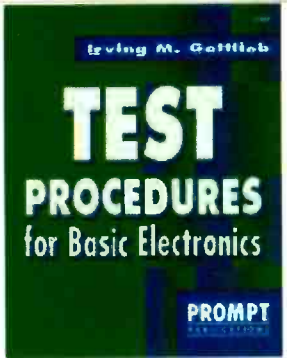

☐ Test Procedures for Basic Electronics. #61063. -- $19.95
Many useful tests and measurements are covered. They are reinforced by the appropriate basic principles. Examples of test and measurement setups are given to make concepts more practical. *7 3/8 x 9/1/4", 356 pp, paperback.*

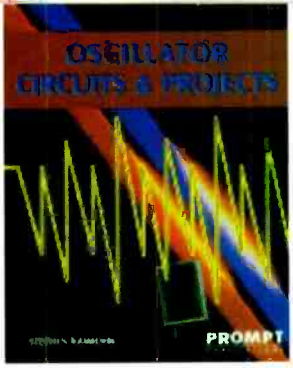

☐ Oscillator Circuits and Projects. #61111. -- $24.95
A Textbook and project book for those who want to know more about oscillator circuits. You can build and enjoy the informative and entertaining projects detailed in this book. Complete information is presented in an easy-to-follow manner. *7 3/8 x 9 1/4", 249 pp, paperback.*

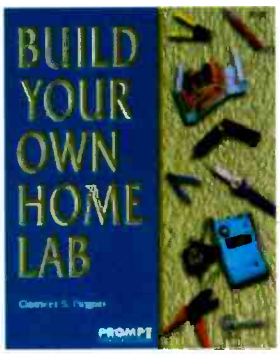

☐ Build Your Own Home Lab. #61108 -- $29.95
Shows you how to assemble an efficient working home lab, and how to make it pay its own way. Includes projects for creating your own test instruments too. *7 3/8 x 9 1/4", 249 pp, paperback.*

☐ Troubleshooting and Repair Guide to TV. #61146. -- $34.95
Repairing and troubleshooting a TV is very simple and economical with help from the information in this book. It is the most complete and up-to-date TV repair book available, with tips on how to handle the newest circuits. *8 1/2 x 11", 263 pp, paperback.*

☐ Complete VCR Troubleshooting and Repair. #61102. -- $34.95
Though VCRs are complex, you don't need complex tools or test equipment to repair them. This book contains sound troubleshooting procedures that guide you through every task. *8 1/2 x 11", 184 pp, paperback.*

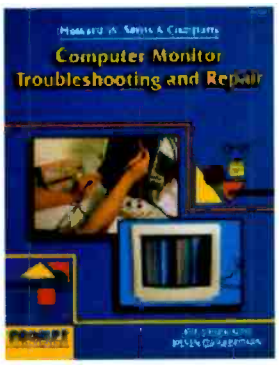

☐ Computer Monitor Troubleshooting and Repair. #61100. -- $34.95
This book can save you the money and hassle of computer monitor repair by showing you how to fix it yourself. Tools, test instruments, how to find and solve problems are all detailed. *8 1/2 x 11", 308 pp, paperback.*

☐ Wholesale & Discount Buyer's Guide #CP-1. -- $19.95
Save up to 90% off list prices. Audio and video equipment and materials; electronic products and surplus; pro recording and specialty items; computers and components. Source listings include complete address, phone, fax, e-mail and website addresses. *8 1/2 x 11", 72 pp, paperback*

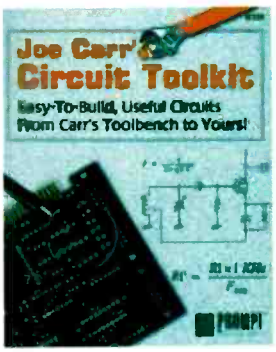

☐ Joe Carr's Circuit Toolkit. #61181. -- $29.95
Easy-to-build, useful circuits from Carr's workbench to you. They will spark new ideas in your day-to-day use of circuits and help solve frustrating problems. *256 pp, paperback. Contact Jim Surface.*

Please circle the products you would like to buy on the page above, calculate the total cost, include shipping charges, using in the form below and send it to us. Please allow 4 - 6 weeks for standard delivery.

Name:_____

Address:_____

_____

Zip: _____ Telephone:_____

I have enclosed my check for $: _____

Signature:_____

Please charge my credit card for $: _____ Number: ☐☐☐☐ ☐☐☐☐ ☐☐☐☐ ☐☐☐☐

Card Type:_____ Expiration Date: ☐☐ ☐☐ ☐☐

Mastercard, Visa or Discover only

Note: The delivery address and the address at which the credit card is registered must be the same.

Claggk Inc.
PO Box 12162
Hauppauge, NY 11788
Tel: 631-592-6720
Fax: 631-592-6723
email: claggk@gernsback.com

SHIPPING CHARGES IN USA.
CANADA ADD $5.00

1 Book	$ 5.00
2 Books	8.00
each add'l book	3.00
2 Day UPS	$10.00 extra
Next Day UPS	$20.00 extra

SORRY No orders accepted outside of USA & Canada No. of Books Ordered ☐

Total price of books	$
Shipping (see chart)	$
Subtotal	$
Sales Tax (NYS only	$
Amount Enclosed	$

All payments must be in U.S. funds! CL04

www.americanradiohistory.com

The world's most popular electronics simulation software just got better!

WHY settle for second best?

*FREE
Virtual Lab with Poptronics Circuits

Check out the circuits from recent issues, including this month's!
Tweak the circuits and see the instruments respond instantly.
Download the Multisim demo with pre-built Poptronics circuits from
www.electronicsworkbench.com/poptronics

BEST PRODUCT! BEST PRICE!

Electronics Workbench is recognized around the globe for developing highly advanced, yet easy-to-use electronics software. Over 150,000 users tell us that they have completed projects using Electronics Workbench in less time than it takes to even install other programs.

And now we've just released Version 6.2! If you've never tried electronics simulation, this is your chance - you can now have your very own virtual lab! Work on your own or create circuits together with others across the country - live on the internet. Start with the ***FREE*** Electronics Workbench/Poptronics demo and then take advantage of this best price ever when you buy. Tried other products? You owe it to yourself to experience what only the market leader can offer - there is no comparison. And if you own earlier versions of Electronics Workbench, call us now for upgrade pricing starting at just **$149**!

multiSIM V6.2
Schematic Capture & Simulation

~~$399~~ **$299**

ultiBOARD
Powerful PCB Layout

~~$399~~ **$299**

or get BOTH products for $498

Limited Time Offer
BEST price ever!

Multisim Highlights

- Advanced schematic capture
- Intuitive auto & manual wiring (no toggle)
- Change circuits while simulating
- Mixed-mode SPICE analog/digital simulation
- Built-in symbol and component editor
- Parts organized into bins (no alpha lists)

Don't settle for a program that has less than:

- 6,000 parts in component database
- 9 virtual instruments & 8 powerful analyses
- Interactive design on the Internet
- OLE integration with Excel/MathCAD

Ultiboard Highlights

- Powerful & easy-to-use PCB layout & editing
- Reroute while move (full rubberbanding)
- Built-in autorouter
- Real-time design rule check
- Automatic net highlighting (selective)
- Density histograms/placement vectors

Don't settle for a program that has less than:

- 3,000+ library of footprint shapes
- Capability for boards of any shape, up to 50"x50"
- 32 layers support
- 1 nanometer internal resolution

To order, or to find out why our products are the most popular in the industry, call ***1-800-263-5552*** *or visit* ***www.electronicsworkbench.com*** *(**FREE** demo available)*

Electronics WORKBENCH

CIRCLE 130 ON FREE INFORMATION CARD

www.americanradiohistory.com