THE MAGAZINE FOR PROFESSIONAL ELECTRONIC AND COMPUTER SERVICERS

ELECTRONIC™ Servicing & Technology

January 2002

NEED AN INEXPENSIVE TEST JIG?

A STROLL THROUGH A Z5683 ZENITH PROJECTION TV

2001 ARTICLE INDEX & 10 YEAR PROFAX DIRECTORY

0-35V, 0-10A DC Power Supply

- Fully overload protected
- Output on/off button
- CV/CC operation

Model 1744

Circle (1) on Reply Card

Test Bench High Performance DMM

Heavy duty design with double injection molding for better grip and shock protection.

- True RMS
- Resistance measurement
- RS-232 - PC link interface for data acquisition
- Logic probe
- Data hold

Model 390A

Circle (5) on Reply Card

Model 1635

1.05GHz Spectrum Analyzer

- 100KHz Frequency display resolution
- Frequency and level markers
- RS-232 interface

Circle (2) on Reply Card

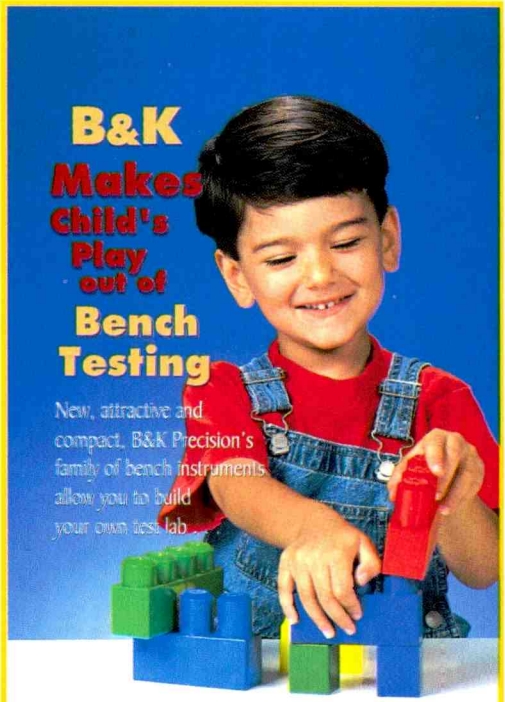

No Kidding.

B+K Precision's line of Bench Test Equipment has a new modern look with all of the same great features such as large, bright, easy-to-read displays and simple easy-to-use controls. The new power supplies provide the versatility and reliability required for a broad spectrum of laboratory and service applications.

B+K Precision offers an extensive line of high performance signal generators including function, sweep/function, RF, audio, and arbitrary waveform generators. And the versatile Bench Digital Multimeters (DMM) offer a variety of important features at attractive prices.

For more information on how you can change bench testing from a chore into child's play

BK PRECISION

SETTING NEW STANDARDS IN PERFORMANCE & VALUE

1031 Segovia Circle, Placentia, CA 92870
(714) 237-9220 Fax: (714) 237-9214
www.bkprecision.com

Circle (9) on Reply Card

Model 1790

High Current DC Power Supply

- Constant Voltage/Constant Current Operation
- Facility for Presetting the Output Voltage and Max. Load Current Limits
- Separate DC Output ON/OFF Switch
- Remote Sensing Facility
- High Stability and Close Regulation ±0.01%
- Meet CE Specifications

Circle (6) on Reply Card

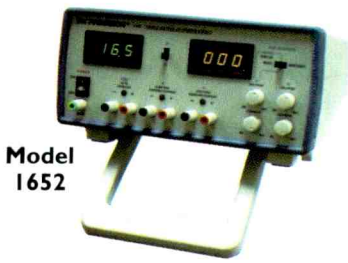

Model 1652

Triple Output DC Power Supply

- Two 0VDC to 24VDC outputs
- Fixed 5V output
- Adjustable current limiting
- Short circuit protection
- Connect outputs in series for higher voltage or in parallel for higher current

Circle (3) on Reply Card

Model 4070A

Function/Arbitrary Waveform Generator

- 0.01Hz Frequency resolution
- RS-232 interface
- Visit www.bkprecision.com for more details

Circle (7) on Reply Card

Model 4040A

20 MHz Sweep/Function Generator

- 0.2Hz to 20MHz
- AM and FM modulation
- Burst operation
- External frequency counter to 30MHz

Circle (4) on Reply Card

Battery Capacity Analyzer

Model 600

- Measures both no Load Voltage and Battery Capacity
- Great tool for testing back up batteries for UPS, Security, Emergency Flood Light systems
- Ideal for automotive, UPS Maintenance, and Telecommunication applications

Circle (8) on Reply Card

THE MAGAZINE FOR PROFESSIONAL ELECTRONIC AND COMPUTER SERVICERS
ELECTRONIC Servicing & Technology

Volume 22, No. 1 January 2002

CONTENTS

FEATURES

A STROLL THOUGH A Z5683 ZENITH PROJECTION TV ____7
By Bob Rose
Bob's business has shifted dramatically over the last three years, and he is now 'disagreeably forced' to pay attention to Projection TVs. They pay the bills, and given a bottom-line mentality he hardly grumbles at all. Stroll with Bob through a Zenith Projection TV.

TROUBLESHOOTING HIGH AND LOW VOLTAGE CIRCUITS IN RCA CTC159 CHASSIS ____14
By Homer Davidson
A large proportion of TV failures are related to the low voltage power supply and high voltage circuits. Homer reviews common and not so common symptoms and ways to efficiently diagnose and repair the problems.

COMPUTER SOFTWARE DIAGNOSTICS ____20
ES&T Staff
A computer is not like most consumer electronics products. It can perform a seemingly limitless number of functions and, because of all these variables, when the service professional is to service a PC, they must first determine what the computer consists of.

Diagnostic software is the key to checking the hardware.

MICROPROCESSORS: DEVICES FOR COMPUTERS AND CONTROL ____24
By John A. Ross
John takes the Professional Servicer through the microprocessor and its functions...and the differences from one to another.

NEED AN INEXPENSIVE TEST JIG? ____37
By Bob Rose
If you service large screen TVs, you may have thought about how handy a test jig would be, especially if there is only one technician in your service center - You!

Bob explains the function, uses and benefits of a Test Jig... and the options on acquiring one.

2001 ES&T ARTICLE INDEX ____43
Our annual listing of the previous year's features, grouped by category.

PROFAX 10 YEAR DIRECTORY ____44
A complete list of the Profax Schematics appearing over the last 10 years in ES&T.

THE CONSUMER ELECTRONICS SHOW (CES) REPORT ____48
ES&T Staff
With almost 100,000 industry professional in attendance, America's largest trade show and convention offered plenty of excitement for everyone. The ES&T staff reviews the key products and events in Las Vegas.

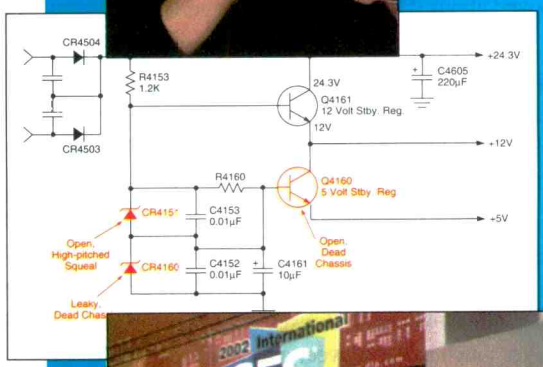

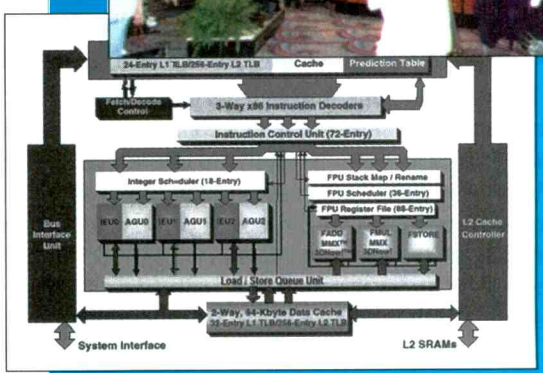

Cover: Thanks to all the vendors and suppliers who provided us with photos, input, and information throughout 2001

DEPARTMENTS

Advertisers Index 56
Association News 52
Classified 55
Display Classified 56
Editorial 2
New Products 50
News 4
Photofact Index 47
Profax 25
Reader's Exchange 54

Editorial

by Nils Conrad Persson

ARE YOU READY FOR "E-WEAR?"

If you take a close look at the well-dressed person, you'll find that a watch is the only thing, other than garments or adornment such as jewelry, that that person is wearing. According to documents recently published, that is about to change. We will soon see people wearing computers, entertainment devices, and more.

First, of course, there was the clock, great for keeping time, but not very practical as portable devices. Eventually, craftsmen made timepieces smaller and smaller, until they could be carried about, and made them with mechanisms that could withstand being moved about. These watches were generally carried in a pocket.

As watches became yet smaller, watchmakers experimented with ways that would allow them to be worn. This tended to be accepted by women, who enjoyed adorning themselves with jewelry, but was looked at askance by the menfolk, who considered such things to be feminine.

One of the things that helped make wearing of a timepiece more acceptable was their use in the military. Even though wearing of a wristwatch under normal, peacetime, circumstances wasn't something a man would do, wristwatches became important in wartime. It was much better to wear a timepiece on the wrist where the time could be determined at a glance, rather than have to dig in one's pockets for an elusive pocketwatch.

By about the 1920's, the wristwatch had become accepted by both men and women, and wearing of timepieces on the wrist became widespread. The rest, as they say, is history. But then..., often you'll see someone out walking, or jogging, with a little radio, or some other type of consumer electronic entertainment device strapped to an arm. Well, hold on. If manufacturers are able to bring to fruition what they envision, you'll be seeing consumer electronics products being worn everywhere!

Here's what Philips Research has to say about it, on their website at http://www.research.philips.com/password/pw3/pw3_4.html (this is a file that bears the title "Towards Wearable Electronics") "People's lifestyles have changed considerably with the result that they are increasingly 'on the move'; yet they still want instant access to information. Just like the carriage clock of 300 years ago personal electronic devices will become items that can be worn as clothing, jewelry and accessories. Wearable electronics is more than adapting electronic devices to this new lifestyle and making them mobile. The real challenge is to integrate them into fashionable clothes that people feel good in and want to wear. In addition, we want applications that stay with you wherever you go, always switched on and working for you, yet courteous enough not to disturb you at inopportune times."

Philips is not alone in this vision. A lot of other manufacturers, and the Consumer Electronics Association are talking about this concept as well. Here's a quote from the document "5 Technologies to Watch," published by CEA on their website at www.ce.org: "Accompanied by blaring music, a model wearing a fabric-based keyboard, a hip-slung wireless e-mail machine and a head-mounted eyepiece pulls a cell phone from her vest and with attitude struts down the runway. For now, you'll only see this digital attire at a high-tech fashion show but rest assured, this futuristic garb is ready to hit the streets.

"The consumer electronics (CE) market has become like the fashion industry-it's obsessed with the newest and latest technology. The marriage of the two industries is bringing cutting-edge chic to the functionality of the CE world. And before long, tens of millions of people could be wearing computers one way or another. The parts may slot into a CyberJacket or BlazerJet like the ones developed at the University of Bristol in conjunction with Hewlett-Packard's research lab. They may be woven into belts, like the Xybernaut models that have been commercially available for years.They may be imbedded in jewelry such as Charmed Technologies has presented at global cyber-fashion shows, or the pendant computer Toshiba showed in concept form.They may even become part of military uniforms, like BARS (Battlefield Augmented Reality System), a military project funded by the U.S. Office of Naval Research. There also is talk of creating brooches and earrings that would work as a secret mobile-phone headset.The earring would be the speaker and the brooch would be the receiver, each communicating wirelessly with the mobile phone in some hidden pocket."

The document mentions a lot of other CE products that have the imminent potential, to become wearable like: cellular phone attire (wearable digital phone set with screen and keyboard belts, plus wearable antenna; cellular phone sets with push buttons incorporated into t-shirts, and modular fashions with cellular phones as part of the detachable clothing details).

More! Hollywood based Orang-Otang computers recently won a patent on a mobile phone that you load up your sleeve and pop into your hand with a snap of the wrist.

"Internet-enabled wristwatches also are big fashion news," the report continues. 'Timex for instance has rolled out its Internet Messenger watch series, which uses Motorola technology."

So, what, if any, implications are there for consumer electronics service centers? We have to admit: we're stumped. No doubt most of these products will be relatively inexpensive and the tendency will be to toss them rather than have them serviced. On the other hand, a wearable computer might be too expensive to throw away and might be a candidate for service. Moreover, if someone becomes attached to a garment/electronic product, they might be loath to part with it and would pay anything to have it kept in service. We're going to give this more thought to see what we can come up with. In the meantime, if any readers have any thoughts they'd like to share on the subject, we'd love to hear them.

One piece of advice, though. You might begin to look for a sewing machine to add to the bench along with the soldering/desoldering station, screwdrivers and wrenches.

Conrad Persson

THE MAGAZINE FOR PROFESSIONAL ELECTRONIC AND COMPUTER SERVICERS

ELECTRONIC Servicing & Technology

Electronic Servicing & Technology is edited for servicing professionals and managers who service consumer electronics equipment. This includes owners, managers, service technicians, field service personnel and avid servicing enthusiasts who repair and maintain audio, video, computer and the new digital consumer electronics equipment.

ELECTRONIC SERVICING & TECHNOLOGY Magazine
403 Main Street, 2nd Floor
Port Washington, NY 11050 USA
516-883-3382 Fax 516-883-2162
mmei@mainlymarketing.com

EDITORIAL
Editor: NILS CONRAD PERSSON
P.O. Box 12487, Overland Park, KS 66212
913-492-4857
cpersedit@aol.com

CONSULTING EDITORS
TV Servicing Consultant: BOB ROSE
TV Servicing Consultant: HOMER L. DAVIDSON
Components Consultant: VICTOR MEELDIJK
Audio Consultant: ALVIN G. SYDNOR

BUSINESS
Publisher: MARIE MARCELLINO
mmarcellino@mainlymarketing.com

President: DAVID L. ALLEN
dallen@mainlymarketing.com

CIRCULATION
Circulation Coordinator
Tel: 516-883-3382 admin@mainlymarketing.com

PRODUCTION
Production Manager: MARIANNE MEADOWS
mmeadows@mainlymarketing.com

SALES STAFF
Sales Director: DAVID L. ALLEN
dallen@mainlymarketing.com

Sales: JONI JONES
P.O. Box 346, Port Washington, NY 11050
Tel: 516-944-8068 Fax: 516-944-2739
jmjones@ix.netcom.com

Sales: BARBARA ARNOLD
60 Thoreau Street, Concord, MA 01742
Tel: 781-259-9207 Fax: 781-259-9883
bhacat@tiac.net

International: JAY FEBRER
jfebrer@mail.com

Classified/Display Classified: LYNDIANE PAOLETTI
Tel: 516-883-3382 admin@mainlymarketing.com

Sales Coordinator: LYNDIANE PAOLETTI
admin@mainlymarketing.com

***FOR SUBSCRIPTIONS** — new or renewal — use our subscription website:* **www.electronic-servicing.com**

Electronic Servicing & Technology (ISSN 0278-9922) is published monthly by Mainly Marketing, 403 Main Street, Port Washington, NY, 11050. Telephone 516-883-3382. Periodical class postage paid at Port Washington, NY and additional offices. Canada: Postage agreement number 1885766. Subscription prices (payable in US dollars only): Domestic—one year $26.95, two years $49.95. Canadian—one year $36.95, two years $69.95. Foreign Air Post—one year $44.95, two years $85.95. Allow six weeks for delivery of first issue and for change of address. Entire contents copyright 2001 by Mainly Marketing. Electronic Servicing & Technology or Mainly Marketing assumes no responsibility for unsolicited manuscripts.

Printed in the United States of America.

Postmaster: Please send change of address notice to Electronic Servicing & Technology, 403 Main Street, NY 11050.

ETA CEDIA National Electronics Service NESDA Dealers Association, Inc. Member, Electronic Servicing Dealers Association

Our Latest Catalog is Available

Our latest catalog, No. 19, was completed in February. If you don't have it call today and our sales staff will send you a copy!

WWW.BDENT.COM

AUTHORIZED DISTRIBUTOR FOR
NEC Shindengen
SANYO SanKen AND OTHERS

TRANSISTORS
MOSFETS
DIODES
LINEAR IC'S
BIPOLAR IC'S
REGULATOR IC'S
OPTOELECTRONICS
THICK FILM HYBRIDS
POWER AMPLIFIER IC'S
NEW
SANYO CAPACITORS

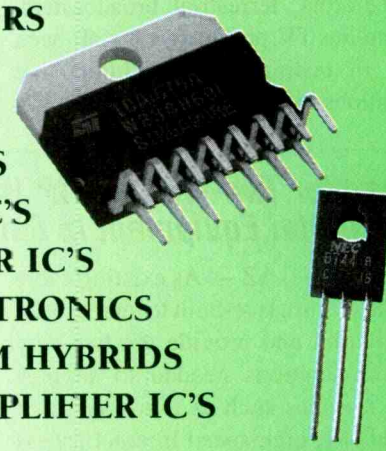

NESDA

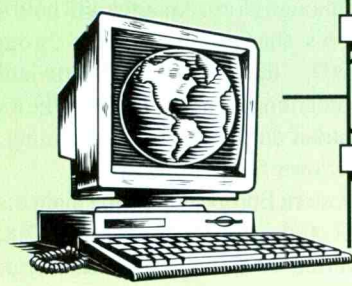

B&D ENTERPRISES

P.O. Box 460 Main & Liberty, Russell, PA 16345
TECH SUPPORT: 814-757-8300
FAX: 814-757-5400

Call today for your FREE Catalog

1-888-815-0508

Circle (10) on Reply Card

News

'On-Demand' Services Poised to Revive Interest in Interactive TV

Scottsdale, AZ: After several years of hype and false starts, the worldwide interactive TV (iTV) market is finally beginning to take shape, according to Cahners In-Stat/MDR. The research firm reports that despite the fact that iTV still must overcome some formidable obstacles, including a broad misunderstanding of exactly what iTV is, the market is poised for growth, particularly in North America.

"After years of trials and tentative service introductions, the past year has seen interactive services become a common sight on most pay-TV networks. Cable TV operators, terrestrial broadcasters, and satellite TV providers have all been active in testing different interactive applications in the quest to increase average subscriber revenues," says Mike Paxton, a Senior Analyst with In-Stat/MDR. "The expanded capabilities that two-way, digital transmission networks offer to both subscribers and service providers have resulted in greater penetration of interactive applications like Electronic Programming Guides and Video-on-Demand."

In-Stat/MDR also found that:

• Of all the different iTV applications, "on-demand" applications, like video-on-demand and personal video recording, have sparked the most industry interest due to their great potential for adoption by today's TV viewers. The number of television households using on-demand services worldwide will jump from 1.3 million in 2001 to over 33 million in 2005.

• North American Video-on-Demand service revenues are forecasted to grow from $86 million in 2001 to over $1.75 billion in 2005.

• In a recent survey of consumers, 75% of the respondents were familiar with several different iTV applications, but had rarely or never used them.

The report, "Interactive TV: On-Demand Services Prime the Pump" (# MB0114MI), examines the availability and the development of interactive television services, with a special emphasis on the emerging "on-demand" services. It covers the issues surrounding the introduction and provisioning of interactive applications via pay-TV and broadcast network infrastructures, and examines the drivers behind the rising interest surrounding interactive TV. The report also looks at some of the hurdles facing the interactive TV industry and provides forecasts for worldwide on-demand services. It specifically segments and forecasts demand for personal video recording services and video-on-demand over the next five years. It also presents the results of a survey covering consumer attitudes in the United States regarding interactive television. The report price is $2,995 USD.

Need for Two-Way and IP Boosts Market for Digital Equipment in Cable Headends

Scottsdale, AZ — As existing cable infrastructure is re-built to increase the bandwidth and provide the two-way communications needed to support new services such as two-way voice telephony, high-speed Internet access and Video-on-Demand (VOD), the number of cable headends converting to digital acquisition will experience a Compound Annual Growth Rate (CAGR) of 35.8% worldwide over the next five years. Cahners In-Stat Group (http://www.instat.com) reports that the worldwide dollar value of digital equipment intended for use in digital cable TV headends and the rest of the delivery plants will top $286 million during 2001, and will rapidly expand to more than $743 million during 2005.

"The additional capabilities that a digital cable system offers customers can present providers with a myriad of opportunities," says Gerry Kaufhold, a Principal Analyst with the high-tech market research firm. "However, in order to provision these services, existing infrastructure must be revamped. The top 8 Multiple System Owners (MSOs) have embraced two-way and IP (Internet Protocol), but many smaller cable operators, especially those in rural areas, will not be able to justify the investment." In North America, In-Stat estimates that the market for equipment to build out two-way digital cable systems for consumer will peak during 2003, and by 2004, the cable industry will need to focus on business markets to find continuous long-term growth.

In-Stat has also found that:

- Although North America will hold the lion's share of the market through 2005, that share will dwindle, accounting for about 71.7% of the total market during 2001, but declining to just over 50% during 2005.
- Western Europe will be the main market outside North America until 2004. During 2005, the Asia Pacific region will become the number two market. There will be a few specific opportunities among countries in the Rest of the World (ROW) segment as well.

In-Stat is a unit of Cahners Business Information (www.cahners.com), a provider of information and marketing solution to business professionals and a member of the Reed Elsevier plc group.

Don Erwin leaves KONKA as Konka Leaves US Market

National City, CA. Don Erwin, a long time personality in the consumer electronics market announced his resignation from Konka Jan. 11.

Konka, a Chinese owned organization, had provided low price televisions and other consumer electronics products to the US market mostly through discount retailers.

Konka closed their US operations on January 30 and are now gone completely from the US market. They were active in the US for 2 years.

According to Don Erwin, servicers or dealers having claims should contact the FTC or BEAR in California... or their own state Attorney General.

Don can be reached at konkasniceguy@home.com

Next Generation Interactive Music Entertainment Platform Debuts from Musicplayground, a Namco Limited Subsidiary

Andover, MA — The next generation of Internet/Window® PC-based interactive music entertainment introduced today by MusicPlayground, Inc., a wholly owned subsidiary of Namco Limited of Japan.

Available now at www.Music Playground.com, MusicPlay offers a one-of-a-kind interactive music experience for music lovers that have Internet access and a Windows®98/Me PC. MusicPLayground makes use of virtual instruments - USB peripherals — that simulate their real world counterparts. The experience is currently available in two membership kits that include a V-pick TM virtual guitar (or bass) pick, CD with MusicPlayground Player software, and direct access to company's online music jukebox of licensed songs. A $59.95 prepaid membership kit allows members to download up to 40 songs for unlimited play over a consecutive 12-month period. Monthly members can renew at will i 30-day increments. In addition, a V-StixTM Virtual Drum Kit is available for an additional $19.95.

It's easy to get started. Members simply install MusicPlayground's Player software onto their hard drive and plug in their virtual instruments. Playing begins by starting up MusicPlaygrounds Player software, selecting a song to download and play, and by striking their virtual instrument in time with the Rhythm EKGTM rhythm guide displayed within the MusicPlayground Player. Song lyrics are superimposed on top of visual content for total entertainment experience. Members can even compete with each other by uploading their playing scores.

Equally important, MusicPlayground is also a platform for musicians who want to either learn or practice the actual guitar, bass, and drum parts of the songs by plugging in their real instruments. Thus, MusicPlayground marks the first time that musicians and non-musicians alike can take and share the same stage, turning their family room into a concert arena.

Aurora Systems Announces New Partnership

Optoma Corp. Selects Aurora Systems Components to Power New LCOS Television

San Jose, Calif)-Aurora Systems, Inc. (www.aurora-sys.com) an international leader in design and marketing of MicroLCD chipsets and high performance LCD display controllers, announced a partnership with Optoma Corp., a display solution provider based in Taiwan.

The partnership joins Aurora Systems' and Optoma Corp.'s expertise within the display market to introduce Optoma Corp.'s first 42" LCOS television. "The joint effort and partnership between these two companies displays the dedication to the progression of LCOS technologies," said Aurora Systems' CEO and president Dr. Mou Hsin Yang.

Aurora Systems licensed its Triton optical engine design along with its hands-on technical support to Optoma Corp. in order to shorten the new television's time to market and to launch a high-quality, affordably-priced unit in mid-2002. "Optoma Corp. hopes that with the introduction of our first 42" LCOS television, we will have laid the groundwork for other manufacturers to follow, thus beginning the LCOS revolution within the industry," said Optoma Corp.'s AVP, Michael Hwang. "It is our intent to provide our customers with a superior product at a good price. By partnering with Aurora Systems we are able to do just that. We selected Aurora Systems because of its expertise and leadership within the marketplace, along with Aurora Systems' ability to provide a total solution for our product," said Hwang.

In conjunction with the Triton optical engine design, Optoma Corp.'s LCOS television utilizes Aurora Systems' ASI 3200 MicroLCD and ASI 500 video image processor. The combination provides the end user with a fully enhanced state of the art display experience and cost effectiveness. "Our goal was to create an LCOS television that would serve two purposes: a no comparison viewing experience coupled with affordability," said Optoma Corp.'s Hwang.

Earlier this year, Aurora Systems and UMC (United Microelectronics Corporation) formed LCOS Strategic Partnership (LSP) to support and promote the development and research of LCOS technology. Now made up of more than 20 companies, the committee continues to establish technical standards within the display industry. The committee meets monthly in Taiwan to shape the progression of the LCOS market.

Vance Baldwin Electronics Named by Lexmark

Lexmark International, Inc. has chosen Vance Baldwin as an Authorized Spare Parts Distributor for original Lexmark replacement parts.

According to the distributor, Vance Baldwin Electronics is the only distributor in the United States to be authorized for Lexmark, Canon, Epson, Hewlett-Packard, Brother, and Panasonic original printer parts.

"Vance Baldwin has enjoyed a great relationship with Lexmark over the years and we are every excited about better serving Lexmark and their customers under this new arrangement", said President Fred Baldwin.

New Orleans, HAI's, New OmniPro II Integrated Security and Automation Controller Wins

HAI, manufacturer of integrated security and home automation systems since 1985, has won the Consumer Electronic Show's 2002 Innovations Award for its new OmniPro II in the Integrated Home Systems category.

Making its debut at CES, the OmniPro II is HAI's sixth generation controller. It includes UL-Listed security, HVAC and lighting control for energy management, and the ease of telephone and Internet access and control. By intuitively coordinating lighting, temperature, and security based on household activity and schedules, the OmniPro II provides superior comfort, safety, convenience and energy savings.

"It's HAI's most connectable and powerful system," explains HAI President Jay Mclellan. "In addition to connections for security devices, thermostats, light switches, telephone and backup battery, the OmniPro II features three built-in serial ports for connection to additional home devices, like touchscreens, infrared controls for home theater, lighting controls and computers."

The OmniPro II features a built-in Ethernet port making control and monitoring features of the system available to any device on the home data network with a standard web browser, like computers, PDAs and web-tablets. Additionally, with HAI's multi-award winning Web-Link II software, the OmniPro II can send emails based on programmed events, such as the kids have arrived home from school, as well as provide real-time video surveillance via the Internet.

HAI's OmniPro II also includes telephone accessibility from within your home or remote location with clear voice menus. The built-in digital communicator reports alarm events to a central station and can dial up to 8 additional phone numbers chosen by the homeowner for voice notification.

International Light Names Dr. Lawrence E. Schumtz President

Newburyport, MA — International Light, Inc., a manufacturer of light measurement instruments for research, manufacturing, and quality control applications since 1965, has appointed Dr. Lawrence E. Schmutz President. He will be responsible for managing the firm's growth and development as photonic methods continue expanding into industrial applications.

Dr. Schmutz was previously the co-founder, President and General Manager of Adaptive Optics Associates, a subsidiary of United Technologies, and holds 21 patents in the fields of adaptive optics, machine vision, micro-optics, imaging and display technology. According to Dr. Schmutz, "I was attracted to International Light because of its 35 year reputation for producing high quality optical radiation measuring instruments that are N.I.S.T. [National Institute of Standards and Technology] traceable."

Dr. Schmutz received his S.M., E.E. and Ph.D. in Electrical Engineering and Computer Science from MIT in 1978. He is a member of the American Physical Society, Institute of Electrical and Electronic Engineers, the Optical Society of America, and the Society of Photo-Optical Instrumentation Engineers, and resides with his family in Watertown, MA.

Internet Access Device Market to Grow 41.6 % in 5 Years — Smart Appliances to Lead in Growth

Scottsdale, AZ — The worldwide market for Internet Access Devices (personal computers, mobile telephones, Internet set top boxes, and Internet and smart appliances) will grow at an overall annual rate of 41.6% in unit terms between 2000 and 2005, according to Cahners In-Stat/MDR. The high-tech research firm reports that the PC and mobile phone segments currently comprise just over 93% of the industry and will continue to represent the majority throughout the forecast period. While the PC and mobile phone segments will have the greatest unit shipments, smart appliances will have the highest Compound Annual Growth Rate (CAGR) at 100.8%.

"Despite our optimistic forecast for this market, there are still several factors affecting all of its individual segments," says Cindy Wolf, an analyst with In-Stat/MDR. "In the coming years many of these product segments will face increased competition from each other as device functionality converges."

In-Stat/MDR also reported the following observations:

- Though the personal computing device market has taken a beating this year, new products and operating systems will stimulate demand in the coming years.
- Consumers are hesitant to switch to Internet-enabled phones due to security fears, price concerns, and the lack of compelling applications.
- Internet set top boxes are confronted with challenges in broadband penetration, consumer education, and operator business models.
- The Internet appliance market has seen the exit of many players primarily due to price and application issues, but there appear to be opportunities in vertical markets.
- The smart appliance market is being hampered by a lack of standards, high prices, and a lack of consumer education on how the products add value.

The report, "Forecast and Analysis of the Worldwide Internet Access Device Market: 2000-2005" (#ID0107AD), analyzes and forecasts the worldwide Internet Access Device industry. Worldwide unit shipments for the period of 2000-2005 are forecasted for each segment. Market dynamics, market leaders, and recent announcements are also summarized. The report price is $1,995 USD.

A Stroll Through a Z5683 Zenith Projection TV

by Bob Rose

You may recall that I have said that I live in "the Zenith Belt," meaning that Zenith products have for years dominated my television market, with Thomson coming in second. I am not sure that a statistical analysis would confirm my observation, but I do know that we service more Zenith and RCA products than any others, and not because they fail more often than the others do. Even though brands like Toshiba, Hitachi, and JVC are gaining in popularity, Zenith and RCA still dominate the big-ticket items.

I have written extensively on direct-view televisions and said very little about projection units because, frankly, I never cared for them. Just seeing one sitting on the floor of the service center puts me in a bad mood. They are big, bulky, hard to service because of chassis layout, prone to fits of irrational behavior, and beyond these observations are just a nuisance. However, business has shifted dramatically over the last three years, and I am now disagreeably forced to pay attention to them. They pay the bills, and given a bottom-line mentality, these days I fix them and hardly grumble at all.

Given these few words of introduction, I invite you to take a stroll through a Zenith projection television. The TV in question is a Z5683R7. As you see from the model number, it belongs to the "Z Line," meaning it has been on the market since about 1997. If you regularly service them, you might consider purchasing the service manual by ordering part number PV-149/GZ from Zenith's part department. I believe you will be pleased with it when you do. Assuming you don't have the literature, I expect to give you enough information to make your job at least a little easier.

Module Replacement Guidelines

If you have been into one of these PTVs, you know that you must deal primarily with two modules, the small signal or main module and the large signal or sweep and power supply module. I fix most of the sets that come into our shop by repairing or replacing one or the other of these modules.

In case you aren't familiar with the Z Line PTVs, let me tell you that you must make certain adjustments when you install a factory replacement for either.

Adjustments After Replacement of the Large-Signal Module

Adjustments to the large-signal module are easy. The Z Line products use the 9-1674 module. Because the same module is used in all screen sizes, you have to adjust vertical and horizontal size when you replace it. Thankfully, Zenith makes the adjustment easy.

To make this adjustment, remove the speaker grill and the rectangular cover you find beneath it. When you do, you have access to the necks of the picture tubes and the front edge of both modules. The large-signal module is on your left. Vertical size (R2104) and horizontal width (R3227) controls are on the front edge of the board. Put a crosshatch pattern on the screen and adjust both controls for an overscan of about 1.5 inches. That's all there is to it.

Adjustments After Replacement of the Small-Signal Module

I wish replacement of the main module was as easy, but it isn't. Make a note of the fact that all convergence data are stored in IC6002, the eight-pin serial EEPROM, which is located inside the micro module. Let me underscore the fact that I am talking about the serial EEPROM, not the EAROM. The latter works in conjunction with the microprocessor by storing the operating parameters that we know as the "service menu." The EEPROM, on the other hand, stores convergence data only.

Perhaps I ought to tell you that virtually all circuitry on the main module is contained on a series of daughter boards that are carefully shielded and mounted vertically onto the motherboard. The micro module is the daughter board located near the front of the circuit board.

Are you following what I am saying? That's right, if you replace the small signal module, you just might have to do a complete convergence, and that, folks, can take up to a half a day, or a week if you are as slow as I am.

I said that you "might" have to do a complete convergence. When I replace a main module, I do one of two things: I either remove the micro module and put it on the replacement part if I know that the micro module is good, or I remove the EEPROM and install it in the replacement module. The service manual won't advise you to do this, but it works. Moreover, it saves you bunches of time.

Of course, you might do as I sometimes do, namely send the module to a repair depot with instructions that I want it repaired and returned to me. Under those circumstances, I don't have to worry about removing the EEPROM or doing a wholesale convergence because the module comes back with the original EEPROM still in it.

You may be thinking, "What about color tracking adjustment?" Don't worry about gray scale adjustments when you replace the main module because color tracking is done by the RGB driver/auto tracking circuit contained inside IC2500. Some color is left on the screen even when you turn the color level in the customer menu completely down. But you might have to make an adjustment or two to the items in the service men.

The Service Menu

The service menu is shown in Table 1. You can access the menu in one of two ways. One way to access the menu is by using the remote control. Press and hold the menu button down until the menu disappears from the screen. Then press in rapid sequence 9-8-7-6-enter. The service menu pops onto the screen at item 03 (H Pos).

Or, using the keyboard, press and hold MENU until the customer menu disappears. Then quickly press ADJUST RIGHT and CHANNEL UP at the same time. The service menu comes up at item 03.

If you want to access all of the items in the menu, use the ADJUST UP arrow to highlight item 01 (Fact Mode) and then the ADJUST RIGHT (or LEFT) arrow to change the setting from "0" to "1." You may now roam at will among the listings in the service menu. However, and this is important, be certain to turn item 01 off before you return the TV to the customer.

If you don't, the customer menu may randomly change just by turning the set on and off. Either turn the factory mode off before you exit the service menu or by setting the clock in the customer menu after you exit the service mode.

Service Menu Items That Might Cause Trouble

Incorrect settings in the service menu often cause trouble. When you come across an unusual problem, I suggest that you check the service menu before you begin changing parts. Assume, for instance, someone calls you and says her TV has been stuck on a certain channel since a thunderstorm rumbled through her area. You might think the tuner had died. Before you jump to such a conclusion, take a look at item 10 (Chan Lock). If its setting has changed from "0" to "1," the TV won't change channels. Fix the problem by resetting the feature. It's amazing what a glitch on the ac line is able to do to electronic memory devices like EAROM's and EEPROM's.

Following are a few others that are prone to cause trouble.

AC Pwr ON turns the set on when ac is applied, effectively disabling the power-on function of the remote control or the front panel. This parameter should be set to "0." Think about it when the TV comes on as soon as AC is applied.

A/V Lock disables all audio and video inputs and gives blue screen and menus only. Set this memory location to "0."

Key Deft disables use of keyboard keys, MENU, ENTER, ADJUST, and SELECT. This item should be set to "0." If the family has small children who poke fingers where they shouldn't, you might help your customer by turning this feature on.

Reaching Components

Just getting to components to do the checks necessary to diagnose the cause of a malady makes finding your way through a maze look like a stroll through a park. Fortunately, the light box slides right out of the TV. Removing it and putting it on a table making things a bit easier. But finding components and connections is still a chore because the engineers and manufacturers haven't left much room to work.

The griping aside, let's assume that you have the light box on your bench and hooked up to a variac. Even though the front panel controls have been disconnected (They are still attached to the cabinet) you have control of the box via the remote transmitter. Before you do anything else, carefully look over Figures 1 and 2. These diagrams accurately depict the component and plug connections on the sweep and main modules.

Troubleshooting is relatively easy if you break the task down into what I'm going to call "circuit groups" and have a pretty thorough grasp of what is working versus what isn't working. For example, does the set appear total-

GZ Service Menu A-18382-03 1.69 7/12/96

Item	Display String	Control	Setting	Max Limit
0	Fact Mode	Factory mode	0	1
1	Preset Px*	Set current video settings to Preset	1	6
2	Theater Px*	Set Current video settings to Movie	1	6
3	Games Px*	Set current setting to Game	1	6
4	Sports *	Set current video settings to Sports	1	6
5	Daylghtpx*	Set current settings to Daylight	1	6
6	Weaksigpx*	Set current settings to Weak Signal	1	6
7	Vert Pos	Vertical OSD Position	15	31
8	Horz Pos	Horizontal OSD Position	34	75
9	Key Defeat	Keyboard Defeat	0	1
10	Chan loock	Channel loock	0	125
11	Mm Vol	Minimum volume	0	63
12	Max Vol	Maximum volume	63	63
13	ACPwrOn	AutoACpoweron	0	1
14	AV loock	AV loockout feature	0	1
15	Feat. Level	Feature Level	1	2
Note:	To change "Feat. Level," "Factory Mode" must be turned on. Make sure "Factory Mode" is OFF before exiting the Service Menu. Level 1 = Zenith and Level 2 = Inteq models.			
16	BandlAFC	Tuning BandlAFC setting	0	7
	0 = BroadcastlAFC fixed		4= BroadcastlAFC search	
	1 = CATVIAFC search		5= CATVIAFC fixed	
	2= HRC/AFC search		6= HRC/AFC fixed	
	3= IRCIAFC search		7= IR~AFC ftxed	
17	Proj Mode	Projection TV Mode	0	1
18	BrightRF	BrightnessRF	105	191
19	Btight aux	Brightness Aux	95	191
20	Sub Contr	Sub Contrast	16	31
21	Low GDrive	Green Drive (color temp = 0)	40	127
22	Med GDrive	Green Drive (color temp = 1)	48	127
23	Hi GDrive	Green Drive (color temp = 2)	44	127
24	Low BDrive	Blue Drive (color temp = 0)	24	127
25	Med BDrive	Blue Drive (color temp = 1)	43	127
26	Hi BDrive	Blue Drive (color temp = 2)	51	127
27	HorzPhase	HorizontalFhase	19	31
28	Col Gamma	Color Gamma Correction	0	1
29	FilAdjust	Filter Adjust	1	1
30	CT Brite L	Linear color temp low brightness point	137	254
31	CT Brite H	Linear color temp high brightness point	168	254
32	RTempl Lo	Linear red temp low point (temp = 0)	32	63
33	RTempl Hi	Linear red temp high point (temp = 0)	32	63
34	RTemp2 Lo	Linear red temp low point (temp = 1)	30	63
35	RTemp2 Hi	Linear red temp high point (temp = 1)	30	63
36	RTemp3 Lo	Linear red temp low point (temp = 2)	40	63
37	RTemp3 Hi	Linear red temp high point (temp = 2)	40	63
38	BTempl Lo	Linear blue temp low point (temp = 0)	33	63
39	BTempl Hi	Linear blue temp high point (temp = 0)	33	63
40	BTemp2 Lo	Linear blue temp low point (temp = 1)	29	63
41	BTemp2 Hi	Linear blue temp high point (temp = 1)	29	63
42	BTemp3 Lo	Linear blue temp low point (temp = 2)	29	63
43	BTemp3 Hi	Linear blue temp high point (temp = 2)	29	63
44	ROB Bnte	ROB Brightness	75	92 (projo set to 67)
45	ROB Cont	ROB Contrast	49	92 (projo set to 44)
46	Sub Color	Sub color	80	127
47	Colr Dec	Color Decode video byte	185	253
48	Colr Emph	Color Emphasis video byte	76	127
49	Ynr Off R	Luma noise reduction RF w/video filter off	2	3
50	Ynr Off A	Luma noise reduction Aux w/video filter off	2	3
51	Ynr On	Luma noise reduction with video filter on	0	3
52	Y Enhance	Luma Enhance video byte	2	63
53	HIV Freq	HorizontaYVertical Frequency video byte	163	254
54	Vel Modul	Scan velocity modulation	2	3
55	BLE Gain	Black Level Expansion Gain	0	1
56	PIP Hpos	PIP horizontal position	16	200
57	PIP SelDel	Single PIP Sel Delay	0	15
58	PIP YDel	Single PIP Y Delay	0	7
59	PIP SWi	Single PIP SWi	0	3
60	PIP HSIDel	Single PIP HSI Delay	2	15
61	PIPVSIDCI	Single PIP VSI Delay	0	31
62	PIP FRY	Single PIP Frame contrast	5	15
63	PIP VSPDel	Single PIP VSP Delay	0	31
	PIP CLISW	Single PIP CLISW	1	1
&	PIP PLLTC	Single PIP PLL Time constant	0	3
66	MPipSel Del	Multi PIP Sd Delay	0	15
67	MPipHsiDel	Multi PIP HSI Delay	11	31
68	MPipVsiDel	Multi PIP VSI Delay	0	31
69	MPipVspDel	Multi PIP VSP Delay	0	31
70	MPipSelMod	Multi PIP Sd Mod	0	3
71	MPipPLLTC	Multi PIP PLL Time constant	1	3
72	MPipWipesp	Multi PIP Wipe Speed	0	3
73	MPip FRY	Multi PIP Frame Contrast	4	15
74	MpipcharY	Multi PIP Character Luma	0	3
75	MpipcBackY	Multi PIP Character Background Luma	0	3
76	MPipVSIISQ	Multi PIP VSI ISQ	0	1
77	MPipVSPISQ	Multi PIP ySP ISQ	0	1
78	MPip INFR	Multi PIP Inner Frame	1	1
79	MPipPedesV	Multi PIP Pedest V	0	15
80	MPipPedesU	Multi PIP Pedest U	0	15
81	MPipDACnst	Multi PIP DAC Constant	0	1
82	Input Lev	Stereo Input Level	7	15
83	Ster VCO	Stereo VCO	26	63
84	SAPVCO	SAPVCO	8	15
85	SAPLPF	SAPLPF	8	15
86	Ster LPF	Stereo LPF	24	63
87	Spectral	Spectral	48	63
88	Wideband	Wideband	31	63

Table 1

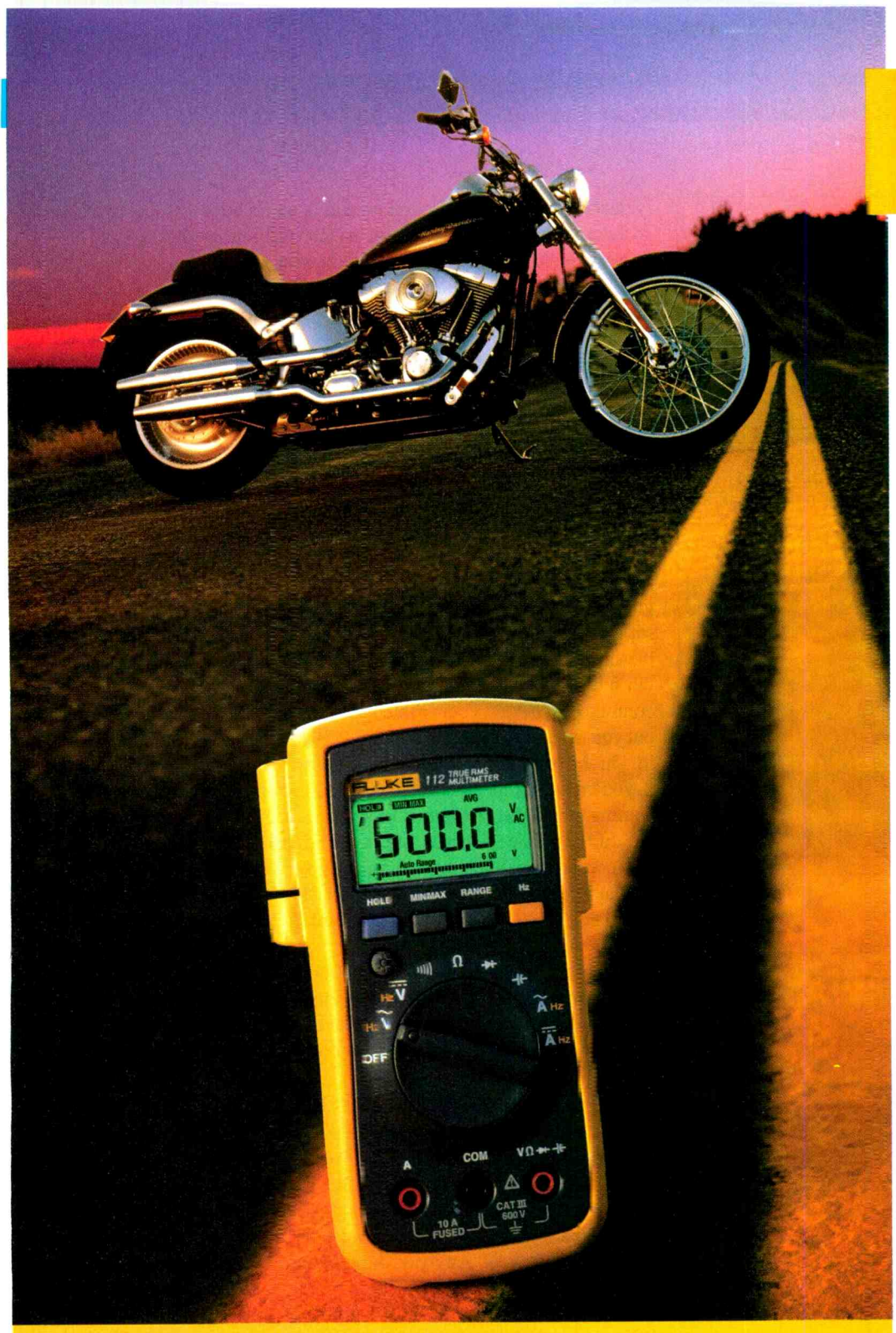

FLUKE®

You could win a Harley-Davidson® motorcycle by test driving a Fluke 112 Digital Multimeter.

If winning this Harley® sounds awesome, wait till you see what our new 112 DMM can do:

- Backlit display for dark spaces
- True-rms improves measurement accuracy
- Holster holds probes for readings and storage
- 3 Year Warranty

Fluke meters have a lot in common with Harleys:

- They're built tough as tanks and run like tops
- Their proud owners refuse to settle for second best

So test drive a Fluke 112 DMM—or any of the Fluke tools shown below—and a 2002 Harley-Davidson Softail® Deuce™ could be yours.

179 DMM, 725 Multifunction Process Calibrator, i410/i1010 Clamps, 190 ScopeMeter, 112 DMM and 337 Clamp Meter

To enter, just take any of these great Fluke products for a "demo" test drive on our website, or submit a demonstration entry form available at participating Fluke distributors. But hurry. The bike rolls out the door on March 31st, 2002. *Freeeeeeee.*

Fluke. *Keeping your world up and running.*

Virtual Demo

Take a virtual product demonstration at **www.fluke.com/freeharley** and enter to win.

The road to winning a Harley® starts with a demo of our meter.

Circle (11) on Reply Card

©2001 Fluke Corporation. Ad No. 01451
No Purchase Necessary. Sweepstakes begins 9/1/2001 and ends 3/31/2002. Enter by taking a Fluke product demonstration at www.fluke.com/freeharley or by completing an official entry brochure/form available at participating distributors. Open to U.S and Canadian residents 18 years of age or older. Void in Quebec and where prohibited. See Official Rules at www.fluke.com/freeharley or at participating distributors.

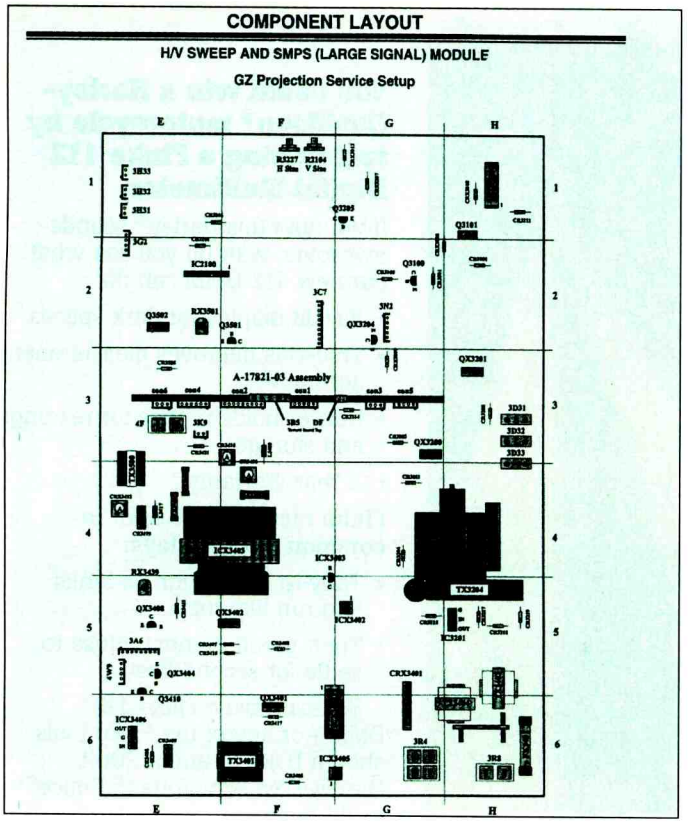

Figure 1

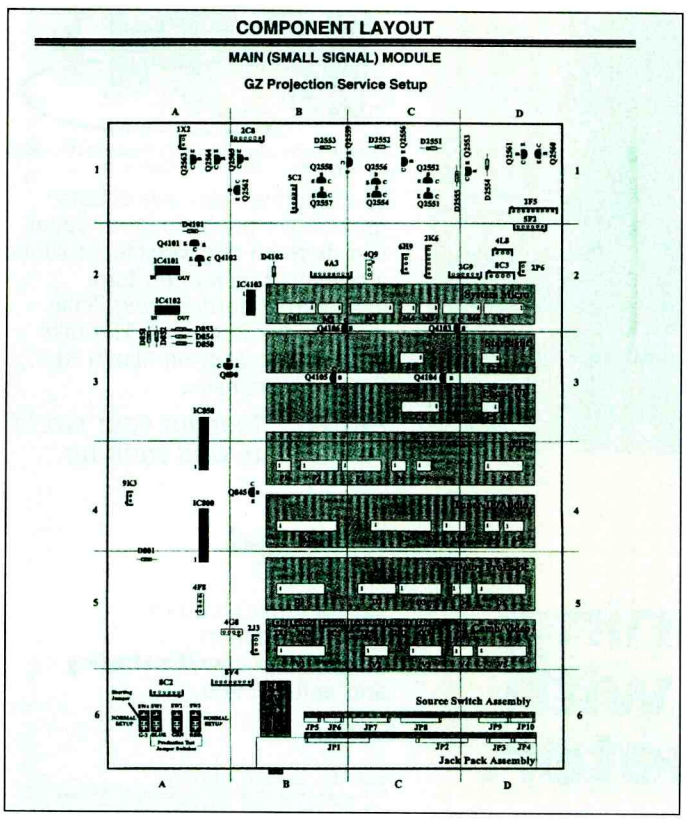

Figure 2

ly dead, does it have video but no audio, audio but no video, and so forth? What is working, and what isn't working, in other words? Begin at the beginning by verifying the status of the standby condition, the power on condition, the sweep start condition, and then and only then check the video and audio conditions. Do your troubleshooting in this order:

- power supplies
- horizontal sweep-high voltage
- vertical sweep
- video, and audio

Let's see how the theory I am expounding works.

Troubleshooting the 9-1674 Module

Assume the PTV is dead. Locate connector 3A6 (Figure 1) on the SMPS and check pin 7 for about +15 volts (Pins 1 and 2 are ground.). If you have the 15V, you know that the standby power supply is up and running. If it isn't present, you know to troubleshoot the standby supply. If it is present, see if the voltage at pin 6 toggles between 0V and about 3.7V when you issue an on command. If it does, your problem is more than likely on the SMPS, but you need to make a few additional checks before you condemn it. On the other hand, if the voltage doesn't toggle upwards from 0, you know that the microprocessor isn't issuing the necessary on command and the problem is more than likely on the main module. Just a couple of checks, you see, eliminates a great deal.

I include some information from the service manual in Figure 3 to aid your troubleshooting efforts. I know the table is a bit confusing, but I offer it because I think it is useful information to have at your fingertips.

The literature advises you to use the left end of RX3401 for the dc common of your meter or scope. If you want to take a few measurements on the primary side of the switching power supply, use the jumper W-3 for the common lead connection.

Missing Standby Voltage

Let's begin by assuming that the +15V standby isn't present. The physical layout of the 9-1674 makes getting to certain test points to check for voltages difficult. I haven't found a way to stand the module on its end to check the foil side of the board, but if you work it just right, you may make the necessary checks from the component side. Anyway, the problem at hand is no +15V.

The 15V is developed by the switching power supply made up of TX3401, QX3401, ICX3401, and associated components. When I wrestled with this problem, I used my scope and checked the drain of QX3401 where I found about 160Vdc and a really screwy waveform. Based on my experience, I felt that ICX3401 and QX3401 were working properly but something was loading down the +15V or the +37V supply. I turned off the variac and was about to remove the module for a bench check when I noticed that the heat sink on which CR3409 is mounted was abnormally hot. I found that CR3409 was shorted. I replaced the defective diode, reinstalled the 9-1674 and was gratified when the TV came on and worked fine.

If the drain of QX3401 has about +160V sitting on it but has no gate drive, turn your attention to ICX3401 and check for startup and run voltage at pin 16. If these voltages are missing, I suggest that you check for shorted diodes, defective capacitors, or open

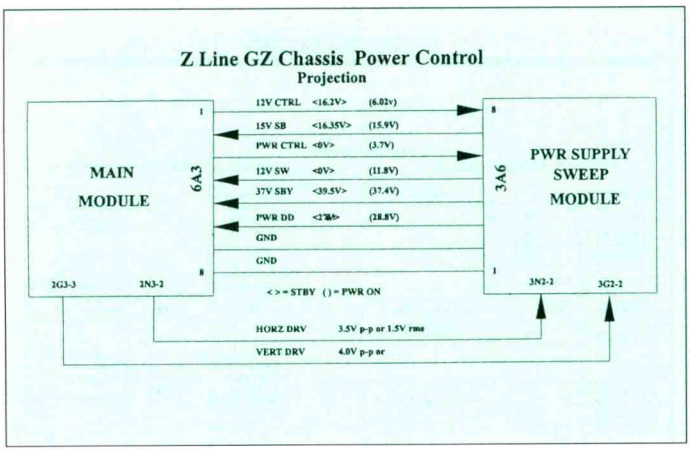

Figure 3

resistors in the startup-run path. Incidentally, if you come across a 9-1674 module that makes a kind of "squealing" sound but works perfectly, suspect transformer TX3401.

Horizontal Deflection Problems

If your experience parallels mine, you will have more trouble from the horizontal deflection circuit than any other circuit in the PTV. I recently repaired one that perfectly illustrates the point. In this instance, I had the +15V standby and the power on command. The TV, however, was quite dead. Under those circumstances, expect one of three conditions: (1) the full power supply isn't providing the +115V to the horizontal deflection circuit, (2) there is no horizontal drive, or (3) the TV is shutting down.

I checked for the +115V first and found it missing. Incidentally, make the check at the cathode of CRX 3412 (Figure 1) if you can get to it, at coil L3415, or the collector of the horizontal output transistor. Since the set on my bench was typical of the ones I have seen, bear with me while I go into it at some length.

The TV had been plugged in and "on" for several minutes when I began to smell the odor of an electrical component overheating. You know the odor if you have worked on TV's. Having "been there and done that," I felt the heatsink on which diode CRX3412 (Figure 2) was mounted, and it was hot! I pulled the module and found the diode to be shorted. I told you I have been there before; so, I checked the output transistor (QX3200) and found that it was also shorted base to collector. My experience has taught me that under those circumstances the flyback is also more than likely defective.

I could have replaced the diode, the output transistor, and flyback. I chose, however, to let a repair depot do the work because the difference in price between doing it myself and letting them fix it is on the order of $20.00 to $30.00 depending on the price of the

Circle (12) on Reply Card

flyback. Besides, I have no way to test the module other than putting it back into the light box and hooking it up, which gets tedious.

I don't know how many 9-1674 modules I have tried to fix on my own, and I can tell you that I have had limited success. Oh, there have been a few times when the diode or the output transistor or both fixed the module, and there have been times when I also had to replace the flyback. But I decided it wasn't worth the aggravation, especially when I could get it done for just a few bucks more than I could do it myself and spare myself the tedium of reinstalling the module to see if it worked every time I replaced a component.

Absence of horizontal drive might also cause a dead set. Check for the presence of a 4V peak-to-peak signal at the 2N3 cable. If it is absent and the cable is good, then the problem will be on the large signal module.

Shut Down

The other common problem that causes a dead set is shut down. You turn the set on and hear a sound that goes "fzzzzz," and then hear nothing. The TV has tried to come on and shut down. If I had put a scope probe on the collector of the horizontal output transistor, I would have seen the horizontal drive come up and immediately die. The most likely cause of this problem is what Zenith calls "the bleeder block assembly" or

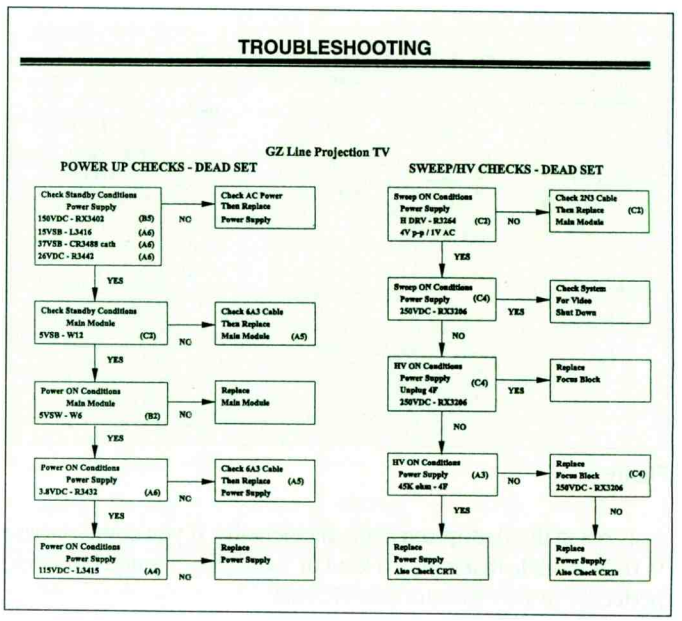

Figure 4

what we commonly call "the high voltage distribution block." It's an easy diagnosis to confirm. Disconnect the flyback lead and securely isolate it. Then turn the TV on. If it comes on and stays on, you most likely have an internally shorted bleeder block. The assembly isn't terribly expensive. But it is time consuming to replace because of the number of wires that have to be disconnected and reconnected and because you must set focus and G-2 controls.

I suppose I ought to sound a note of caution because a shorted CRT also causes shutdown. You might want to reconnect the flyback lead and disconnect the high voltage leads to each picture tube and see if the set comes on with the leads disconnected. Regardless of how you make the checks, I know you have the common sense to be careful. The high voltage probably won't kill you, but it'll make you wish it had!

Vertical Output Problems

Now, shift your attention from the "dead set syndrome" to a PTV that has audio but no raster. Obviously, such a set of symptoms has multiple causes, but the most common one is no vertical drive to the yokes. When you come across an "audio but no raster" condition, I suggest you use your scope and check for vertical drive at either of the three vertical yoke connectors. The connectors are labeled 3H31 through 3H33 (Figure 1) and are located at the front and on the left side of the 9-1674 module.

If you don't see vertical drive, immediately suspect IC2100, the vertical output IC. I have never failed to repair a no vertical deflection problem by replacing the IC itself.

You should also check for burned or open resistors and shorted diodes while you have the module on your bench. And, the module uses the popular LAxxxx series of IC's to develop vertical drive.

Other Problems

A 9-1674 module will occasionally have other problems than

ETA-I
Electronics Technicians Association, International
SDA

Want To Know More About Basic Electronics?
(The Associate C.E.T. Study Guide 1 & 2)

Want To Know All About Antennas & Televisions?
(The Antenna Book 1 & 2)

Want To Be Able To Communicate With Customers More Professionally?
(The CSS Study Guide - 2nd Edition)

Want To Add Membership In A Professional Technicians Trade Association To Your Resume?
(ETA Membership)

Call ETA @ 800-288-3824
Or E-Mail For More Information at eta@tds.net
Electronics Technicians Association, International
502 N. Jackson Street
Greencastle IN, 46136

Circle (13) on Reply Card

the ones I have described. I have repaired broken leads such as a broken drain lead at QX3204 (Figure 2), replaced blown electrolytic capacitors, replaced open fuses in the convergence power supply, repaired lots burned traces, and fixed cold solder connections where the daughter board joins the sweep module. I have just tried to highlight the most common problems.

The Main Module

The time has come to focus attention on the main module, which will have one of several designations depending of course on the feature levels of the PTV . The literature designates it "9-1847 through 9-1850 small signal module." I choose to use the designation "main module." It will have the following minimum daughter boards on it: video, audio-if, and micro. It might have one or more of the following, again depending on the features the main module supports: Dolby, PIP, C-I, or Starsight. It also has the jack pack attached to it and will be the location of one or more audio output IC's. Given its complexity and the fact that I cannot get to most of the components, I don't try to service the small signal panel beyond a certain point.

I have had good success servicing these sets for a no-audio condition. Replacing the audio output IC and two (or more) burned resistors usually solves the no audio problem. I believe the audio output IC for the less sophisticated sound system is a TA8200AH, a fairly common chip that most shops keep in stock. I don't have a component location for the resistors because I am working from memory at this point. I do know that you won't have trouble locating them because they will be either burned open or severely discolored, or both. I do recall that they are located on the left side of the module.

I have also had success replacing tuners. The tuner is located inside one of the "cans" about which I have already spoken. You must unsolder the pins that hold the can to the motherboard and remove its shields to get to the tuner. When you get to it, you might try to repair it. If you can't fix it, consider either purchasing a new one from Zenith or sending the defective one to a repair depot. Either way, you pay less for the tuner than you would for a new or a rebuilt module.

The Convergence Module

The convergence module, designated 9-1690, also fails. It is mounted "sideways" just to the right of the 9-1674 and is attached to the rest of the TV via five cables. I have had several occasions this year when I had to replace both the 9-1674 and 9-1690. Wondering if there was a connection, I talked to an engineer from Zenith who said that a failure of the 9-1690 just "might" lead to a failure of the 9-1674 and not vice versa.

I used to order the convergence module from Zenith and in fact kept one in stock. However, I found out that these little jewels are easy to fix. The fix involves replacing both amplifier chips, which are STK392-110's, and from two to four 0.5W, 1ohm resistors. The resistors are designated R4160-4164. The bad news is, the STK chips are on national backorder. I have twelve on order from one distributor with a delivery date of several weeks from now. I have also learned that Panasonic makes a 392-110, which is available, but it costs more than twice as much as the common STK.

The Video Output Module

I want to deal with one other module that is prone to give trouble before I conclude my article. So, I call your attention to the video output modules which, of course, are located on the CRT's. Part numbers for these modules, in case you them, are: 9-1303 (green), 9-1304 (blue), and 9-1305 (red).

The first time I saw the problem these modules cause I really thought that I was looking at a defective picture tube. You know the symptom, well-washed out color and poor video. In fact, I was in the process of placing an order for the tube when I remembered a service bulletin about poor video that was caused by an open resistor on a video output module. Feeling I had nothing to lose, I checked the resistors on the module of the CRT in question, and I did find an open resistor. The resistor in question is a 120kohm, 0.5W unit that is designated R5102. In the two years since my initial discovery, I have repaired more than a dozen video problems just by replacing R5102. I suggest you brand its value and designation on your forehead because you will eventually encounter it if you haven't already.

Well, this concludes our stroll through a Z5683 Zenith projection TV, and I hope you have found our time together profitable. I do think that I have given you enough information to make your repairs go at least a little easier. ■

Circle (14) on Reply Card

Troubleshooting High and Low Voltage Circuits in RCA CTC159 Chassis

by Homer Davidson

A large proportion of failures in TV sets are related to the low voltage power supply and high voltage circuits. A dead chassis may be caused by a blown fuse or isolation resistor, silicon diodes, SCRs and zener diodes in the low voltage circuits. A dead chassis may be caused by problems in the horizontal and high-voltage circuits such as defective capacitors, a leaky driver transistor or horizontal output transistors, faulty driver transformer connections, or deflection yoke problems. The dead chassis might also be caused by defective zener diodes and regulator transistors in the standby voltage sources (Figure 1).

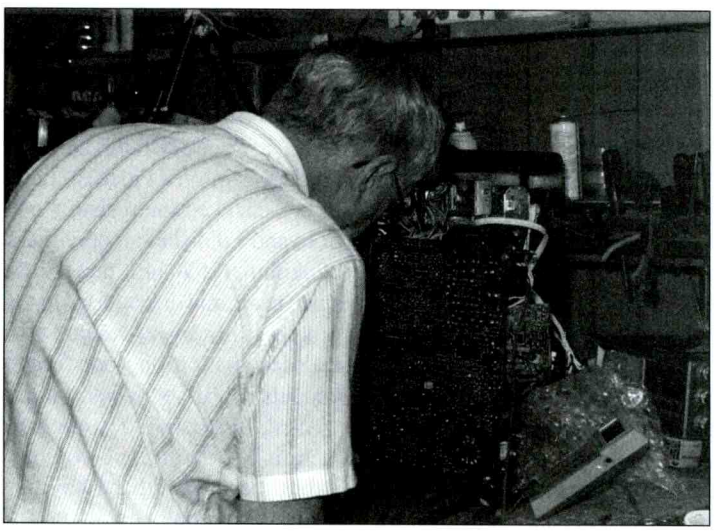

Figure 1. The TV technician servicing the low and HV circuits of a TV chassis.

If you encounter an open 5A fuse, likely causes may be a leaky or shorted silicon diodes in the full-wave rectifier low voltage circuits or a shorted horizontal output transistor. If the chassis is dead but the line fuse is intact, the cause may be a defective horizontal driver or output transistor, bad driver transformer soldered connections, open or leaky SCR, or leaky zener diodes in the low voltage circuits.

If the picture is bent or bowed, but the fuse is good, the problem may be defective transistors and/or diodes in the pin cushion circuits. An extremely tall picture with narrow width might result from an open error amp transistor, defective horizontal output transistor, or a defective yoke assembly, or faulty components in the yoke circuits.

Completely Dead

There are a number of possible causes of a completely dead RCA CTC159 chassis:

- an open line fuse (F4001),
- isolation resistor (R4001) at 2.7O standby zener diode (CR4160),
- CR4701 in the 200V source,
- CR4001 in the low-voltage bridge circuit,
- zener diode (CR4104) in the 33V source,
- and SCR4101 in the + 120V source.

Components in the horizontal circuits that might cause a dead chassis, if faulty, are:

- a defective driver transistor (Q4301),
- leaky horizontal output transistor (Q4401),
- and poor soldered contacts on the horizontal driver transformer (T4301).

If you find a blown 5A fuse accompanied by an open R4001 (0.7O, 15W) resistor check for a leaky or shorted diode in the bridge circuits. If the voltage at the output of the 162V source is low or at 0V, the cause may be an open or leaky 680uF, 200V electrolytic capacitor (C4007). If the voltage fed to the horizontal output transistor is low, or 0V, suspect defective SCR4101 in the 126V source. The dead chassis can also be caused by a 33V zener diode (CR4104) in the same low voltage power supply circuits (Figure 2).

A quick voltage measurement across electrolytic capacitor C4007 (680uF) can determine if the low voltage circuits are functioning. These low voltage circuits are in the "hot" ground circuits. All voltages in these circuits should be measured with respect to the hot ground. Use the common terminal of the 680uF electrolytic for the hot ground terminal.

All voltage measurements in the low voltage, error amp, sawtooth generator, and oscillator circuits should be made with respect to the hot ground terminal. Likewise the horizontal drive and output circuits are included in the hot ground circuits. Be sure to check the CTC159 wiring schematic to determine the proper ground connections in taking voltage and waveform measurements.

Dead Chassis-Horizontal Squeal

Several components in the CTC159 chassis can cause a squealing noise if they're defective:

- the zener diode in the error amp circuit of the low voltage power supply,
- a leaky on/off switch transistor (Q4152),
- an open zener diode (CR4161),
- a defective magnet coil (L4402) in the width circuit of the horizontal yoke circuits.

Defective components in the standby voltage power supply can cause a horizontal squeal accompanied by a dead chassis. The standby circuits are on all the time with a power transformer (T4601) providing voltage to a full-wave bridge rectifier circuit. The 24.3V source

New Family of B+K Precision® Device Programmers

B+K Precision programmers have been designed for ease-of-use and reliable performance. These programmers are a must for anyone that Tests, Repairs, or Programs any electronic device that uses a memory IC.

- 48 pin ZIF socket, no adapter required for any DIP device up to 48 pins (32 pin model 848)
- Fast and accurate programming
- Parallel printer port interface
- Windows 95/98/Me/NT/2000 compatible

(Contact us for help in selecting the right programmer for your application)

Model	848	864	865
Devices Supported	"EPROM, EEPROM/Flash, Serial EPROM, Microcontroller, PLD and BPROM (BPROMs 864 & 865)"		
Device Library	2500 (Optional Modules maybe required)	4322	4391
Interface	Standard Printer Parallel Port		
"Programming Socket .300-.600 pin spacing"	32 pin DIP ZIF	48 pin DIP ZIF	48 pin DIP ZIF
Operating System	Windows® 95/98/Me/NT/2000 compatible		
Buffer Features	Erase, Random Data Fill, Fill Block, Copy Block, Move Block, Swap Block, Buffer Print, Find Text, Replace Text, Go To Address, Checksum Calculator, 8 bit & 16 bit View Modes"		

Enter 15

NEW PRODUCT UPDATES FROM B+K PRECISION®

125VAC, 125W Output DC Inverter

The model 1605 DC Inverter can convert a standard 12 volt cigarette outlet into 115VAC, 60Hz signal that can be used to provide power for just about any kind of appliance. It can be used to provide power to notebook computers, televisions or just about any electronic device that draws less than125W. This unit can provide its maximum current output continuously hour after hour without overheating.

Enter 16

Tone Generator & Cable Tracer Kit

The model 262 Tone Generator and Cable Tracer Kit contains a hand-held Tone Generator and a hand-held Cable Tracer. The Tone Generator can impose a tone on a wire or cable and test for wire continuity. The Cable Tracer can trace Tone Generator signals through dry wall, wood and many other non-metal surfaces (under ideal conditions). The Tone Generator has a standard RJ11 plug and two alligator clips that allow easy connections between the unit and stripped wires, terminal panels, wall plates, or modular single line jacks.

Enter 17

Battery Capacity Analyzer

For UPS's, Telecommunications & Automotive

The need for battery maintenance tools is growing for use in Automotive, Field Service and Maintenance, Telecommunications, and UPS Manufacturing/Maintenance applications.
Model 600 measures the storage capacity of 12V Lead Acid Batteries and displays the capacity as a percentage. This can help identify batteries which may be defective or deteriorated. With California electricity crisis, model 600 is the perfect tool to prevent sudden UPS failures.
Model 600 is priced at $299 and available now.

Enter 18

New Designs for BK Power Supplies

Triple Output DC Power Supply

Model 1670A
- One variable 0-30 VDC, 3 A section
- One 12 VDC fixed section
- One 5 VDC fixed section
- Ideal for general electronic servicing, school electronics labs, and powering up hobbyists projects

Enter 19

Programmable DC Power Supplies

Model 1786A
- Nine user-programmable preset outputs
- Ten step user-programmable output routine
- In-case calibration
- Serial interface cable and software included
- Download upgraded software from www.bkprecision.com

Enter 20

BK PRECISION 1031 Segovia Circle, Placentia, CA 92870 (714)237-9220, Fax: (714)237-9214 www.bkprecision.com

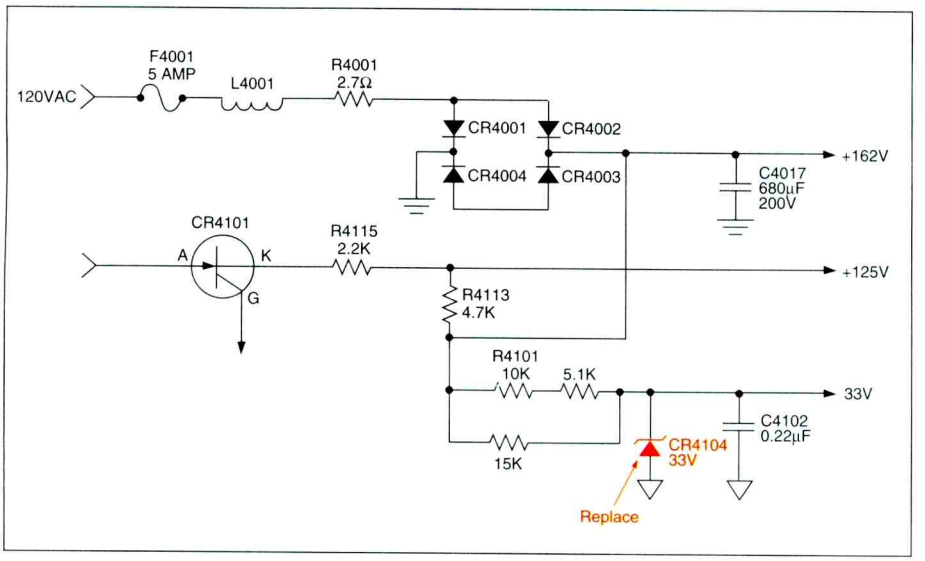

Figure 2. The dead chassis can be caused by a CR4104 zener diode and SCR4101 in the line voltage source.

provides an unregulated voltage to the horizontal driver transformer.

The regulated 12V source furnishes a voltage source to the IR preamp (U3401) for remote control action, power switches in the microcomputer processor (U3100), on/off transistor switch and standby reset transistor circuits. The regulated 5V source from the standby voltage power supply is fed to the microcomputer (U3100) circuits and the Vdd source to AIU IC (U3300).

Locate the 12V standby regulator transistor (Q4161), close to the small ac power transformer (T4601) (Figure 3). Check the output voltage at the junction of CR4604 and CR4603 or across filter capacitor C4605 (220uF). The 24.3V source is tied to the collector terminal of the standby regulator transistor (Q4161).

An open CR4161 (6.8V) zener diode in the base circuit of Q4161 can cause a horizontal squealing noise. The leaky CR4160 zener diode in series with CR4161 can cause a dead chassis. Check the + 5V standby regulator transistor (Q4160) if the chassis is dead. If the +5V regulator transistor (Q4160) is open, the voltage at its emitter terminal may be extremely low, or 0V.

Check all regulated transistors and zener diodes in the standby voltage circuits with a diode test of the DMM. You can perform in-circuit tests of all electrolytic capacitors in the standby regulator circuits with the ESR meter. Besides defective zener diodes and transistors, do not overlook open electrolytic filter capacitors if supply voltages are low. Notice that all voltage tests in the voltage regulated standby circuits can be made from the common ground terminal.

If Q4161 (2SD2012) is defective, replace it with an exact manufacturer's replacement component (157627). CR4161 can be replaced with a NTE5071A, ECG5071A, and SK5071A, while CR4160 can be replaced with a NTE5011A, ECG5011A, or SK5011A universal replacement. Q4160, the 5V standby transistor can be replaced with a NTE123AP, ECG123AP or RCA SK3854/123AP.

Dead on Arrival

Improper operation of the various components in the horizontal circuits can cause a dead chassis symptom. No horizontal sweep from the process IC, open or leaky driver and horizontal output transistors, defective yoke and flyback can cause a dead chassis. By scoping the horizontal circuits in most color TV chassis, the defective stage can easily be located. When the horizontal deflection IC supply voltage is provided by the scan-derived voltages in the flyback, the horizontal circuits must operate before voltage is applied to the deflection IC.

A quick in-circuit test of the horizontal driver (Q4301) and horizontal output transistor (Q4401) can determine if they are defective. Both Q4301 and Q4401 have caused horizontal service problems in the CTC159 chassis. An open driver transistor (Q4301) can cause a dead chassis symptom. Leaky or shorted Q4401 can blow the main 5A fuse and produce a dead chassis. Last but not least, in some cases resoldering the driver transformer (T4301) connections can cure a dead chassis or start-up symptom (Figure 4).

Critical components tied to the driver transformer can cause a dead chassis,

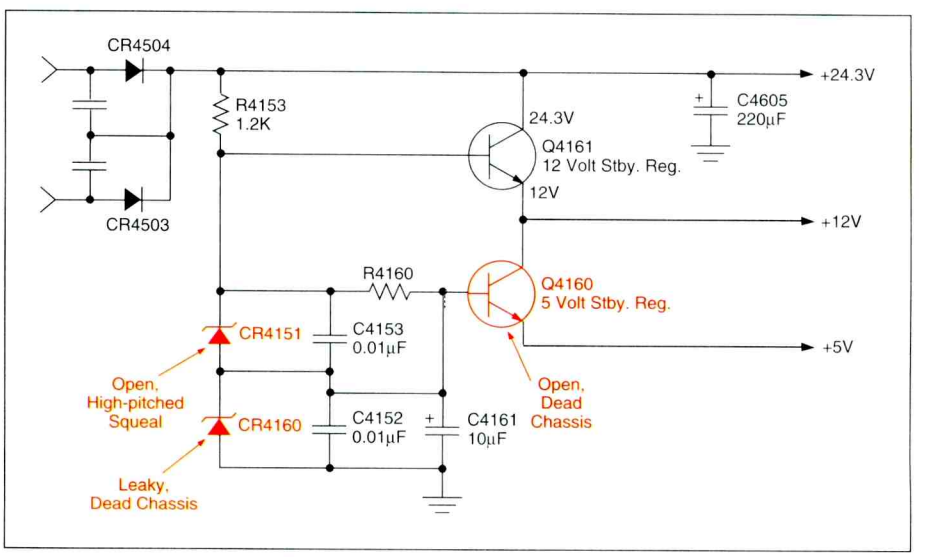

Figure 3. A horizontal squaking noise can be heard with open zener diode CR4151 in the 12 volt standby regulated power supply circuits.

intermittent start-up, causing repeated failure of Q4401. Inspect and resolder terminals of R4305 (100O) and CR4707 in series with the primary winding of T4301. Check CR4506 and CR4707 to see if they are open or leaky. Suspect C4306 (4.7uF) electrolytic, C4402 (0.0143uF, 1.6 kV) and SMD capacitor (C4303), if the horizontal output transistor fails repeatedly. Notice that the horizontal output circuits from the secondary side of T4301 are in the "hot" ground circuits.

If the horizontal driver (Q4301) has to be replaced, use the manufacturer's exact replacement (190482). If output transistor Q4401 must be replaced, replace it with the exact manufacturer's replacement, part number 190483. Capacitor C4402 (0.0145uF, 1.6KV) is a special capacitor and should be replaced only with the exact manufacturer's replacement, part number 195700.

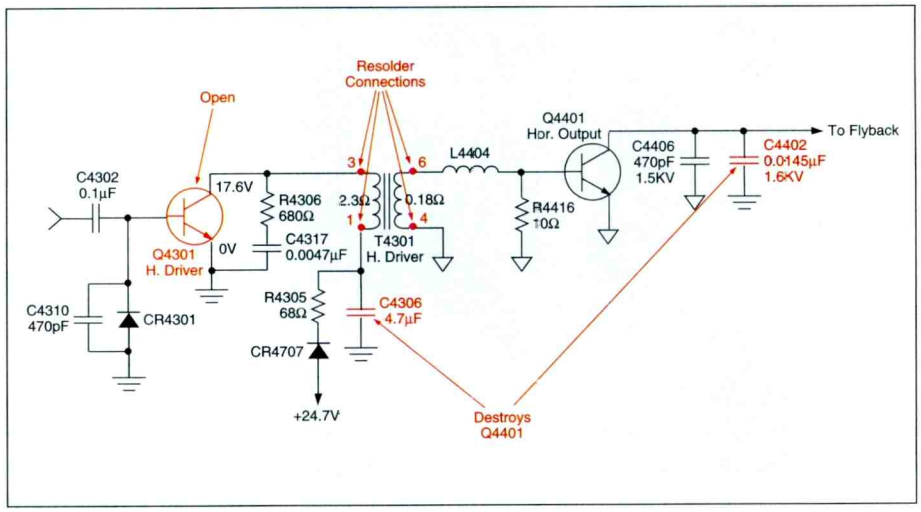

Figure 4. The dead horizontal CTC159 circuits were caused by an open horizontal driver transistor (Q4302) and C4402 with C4306 keeps destroying output transistor Q4401.

Picture is 6 Inches Wide and 12 Inches Tall

Another CTC159 chassis was brought in with the complaint of a very narrow picture and poor vertical height. The horizontal output transistor tested leaky and was replaced. When power was again applied to the set, transistor Q4401 immediately began to become quite warm and the chassis was shut down. The waveform at the base of Q4401 appeared quite normal on the oscilloscope screen. No doubt the horizontal output circuits were being loaded down by a defective component (Figure 5).

Capacitors C4406 and C4402 in the primary winding of T4401 were checked and found to be good. CR4403, C4405 and C4404 in the horizontal yoke and pincushion circuits checked okay. Poor

The Standard for checking Capacitors in-circuit

Good enough to be the choice of Panasonic, Pioneer, NBC, ABC, Ford, JVC, NASA and thousands of independent service technicians.

Inexpensive enough to pay for itself in just one day's repairs. At $179, it's affordable.

And with a 60 day trial period, satisfaction guaranteed or money-back policy, the only thing you can lose is all the time you're currently spending on trying to repair all those dogs you've given up on.

Locate shorted or leaky components or conditions to the exact spot *in-circuit*

Still cutting up the pcb, and unsoldering every part trying to guess at where the short is?

$179

Your DVM shows the same shorted reading all along the pcb trace. LeakSeeker 82B has the resolution to find the defective component. Touch pads along the trace, and LeakSeeker beeps highest in pitch at the defect's pad. Now you can locate a shorted part only a quarter of an inch away from a good part. Short can be from 0 to 150 ohms

CapAnalyzer 88A ***LeakSeeker 82B***

***Available at your distributor, or call* 561-487-6103**

Electronic Design Specialists www.eds-inc.com

Circle (21) on Reply Card

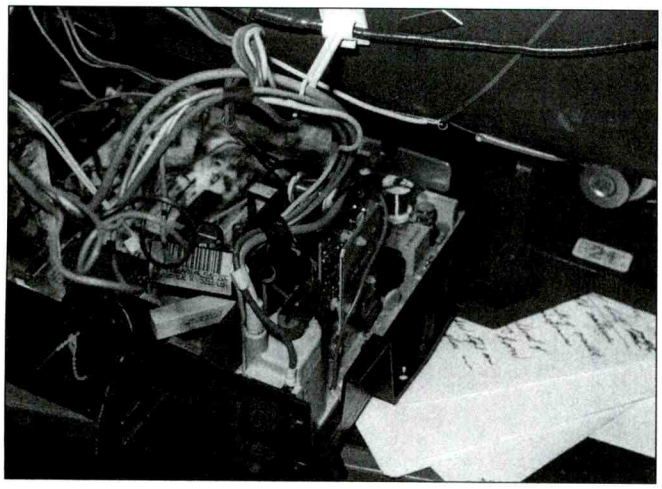

Figure 5. Poor width can result from a defective horizontal output transistor, driver transformer and horizontal output transformer.

width in another CTC159 chassis we had encountered was caused by a defective error transistor (Q4802), so that component was checked. In this case, in-circuit tests showed that the transistor was good.

Power was again applied to the chassis, and several horizontal waveforms were observed at the driver and horizontal output circuits. The voltage at the collector terminal of Q4401 was a little low, but the base drive waveform look correct. These conditions led me to assume that the replacement transistor was defective, so I removed it from the heat sink. Q4401 was replaced with a new transistor, but the picture was still too tall and very narrow.

A quick continuity test of the yoke assembly indicated a good measurement with no signs of leakage between the windings. Although, the flyback tested normal, the horizontal output transformer was replaced with part number 191148; the results were the same. The only conclusion I could come to is that the deflection yoke just had to be defective, even though it tested good. After replacing the flyback and deflection yoke, the horizontal sweep returned to normal.

Set the brightness, color and contrast controls to a minimum to check the high voltage. Connect a high voltage probe to the CRT anode. The high voltage measurement should range between 27kV and 28.5kV. The HV should never exceed 30 KV. Since the width control was adjusted during the troubleshooting process, R4805 was readjusted for correct width.

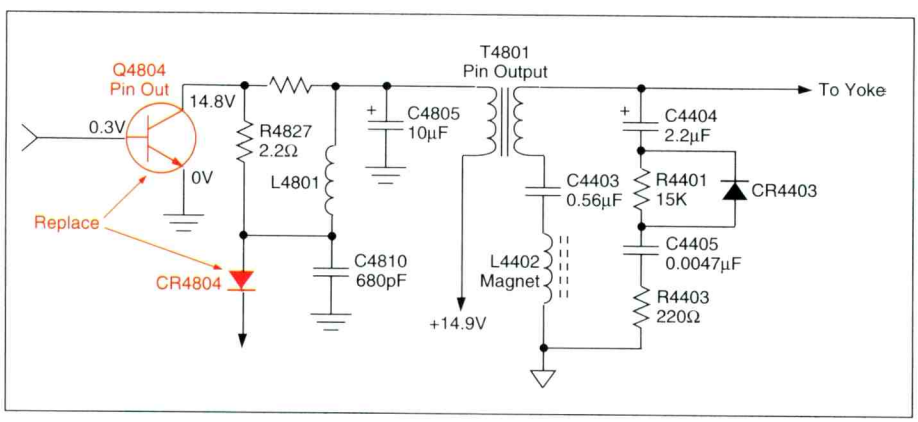

Figure 6. Bent and bowing pictures can be caused by defective pin output tranistor (Q4804) and diode Q4804 in the pin cushion circuits.

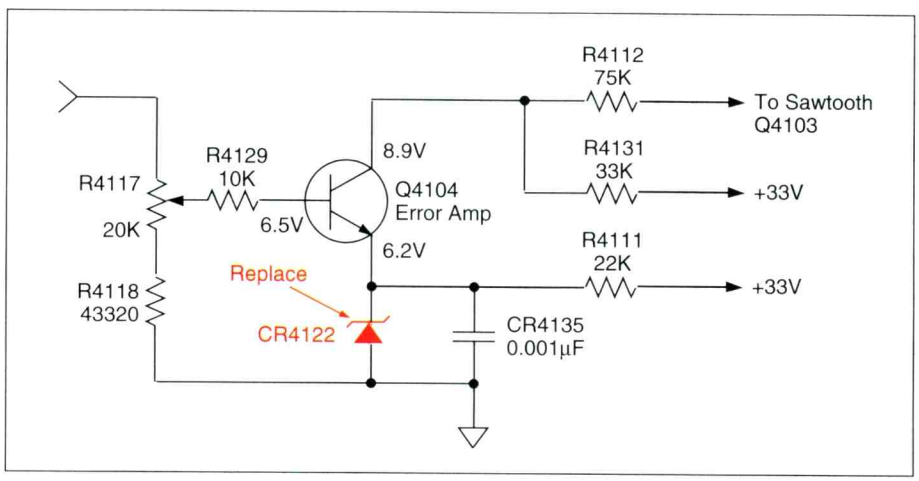

Figure 7. Replace CR4122 for pie crusting in the picture symptom.

Distorted Pictures

A bending picture with sides pulled in and a bowed picture can result from a defective component in the pincushion circuits. If you encounter this problem, check pin output transistor (Q4804) for open or leakage between base and emitter. Leakage from emitter to cathode in Q4804 is another possible cause of a bent picture or raster (Figure 6).

Poor horizontal linearity and foldover can be caused by capacitors C4403, C4404, C4405 and C4406 if they become defective. Check all electrolytics and bypass capacitors in the horizontal output and pincushion circuits with the ESR meter.

In many cases, a technician will attempt to make pincushion adjustments to correct the pincushion problems, but fail to achieve the desired result because a defective part is the cause of the problem. The problem won't be corrected until the defective part is replaced.

To correct pincushion, adjust the E/W Pin Amplitude control (R4803) for straight vertical lines at the left and right side of the screen with a crosshatch pattern generator connected to the antenna terminals. Be sure the width is adjusted and the horizontal centering control (R4321) centers the picture horizontally.

A Piecrusting Problem

A horizontal squeal accompanied by piecrusting in the picture can be caused

by a defective 6.2V zener diode (CR4722) in the error amp transistor circuit of Q4104, or the low voltage power supply circuits. Check CR4120 for leakage or open conditions. Disconnect one end of the 6.3V zener diode from the PCB with desoldering braid and a soldering iron, then check the diode for an open or leakage condition. When the picture shows signs of piecrusting, replace CR4120 with original part number, 195881, even if it tests normal out of the circuit (Figure 7).

Check the error amp transistor (Q4104) using in-circuit transistor tests after locating a defective zener diode. Notice that the B+ adjustment R4117 is in the base circuit of Q4104. Although the regulated B+ voltage control is sealed, you should check the B+ to be sure that the voltage applied to the horizontal circuits is correct. Connect the DMM to TP126, at the cathode (K) terminal of SCR4101. The B+ voltage should read around 125V +/- 1Vdc. Make sure the brightness, contrast and color controls are set at a minimum for the B+ adjustment.

Horizontal lines in the picture can be caused by a shorted C4109 (0.01uF) capacitor. C4109 is located in the base circuit of oscillator transistor (Q4102). This same capacitor is connected to the anode terminal of SCR4101. Notice that the voltage measurements in these low-voltage circuits should be taken from the "hot" ground side.

High Voltage Shutdown

High voltage shutdown can be caused by a number of conditions:

- excessive HV at the anode terminal of the picture tube,
- extremely high B+ voltage applied to the horizontal output transistor,
- a hold-down capacitor in the collector circuit that has become open or changed in capacitance,
- a defective flyback,
- or a bad component in the high voltage shutdown circuits.

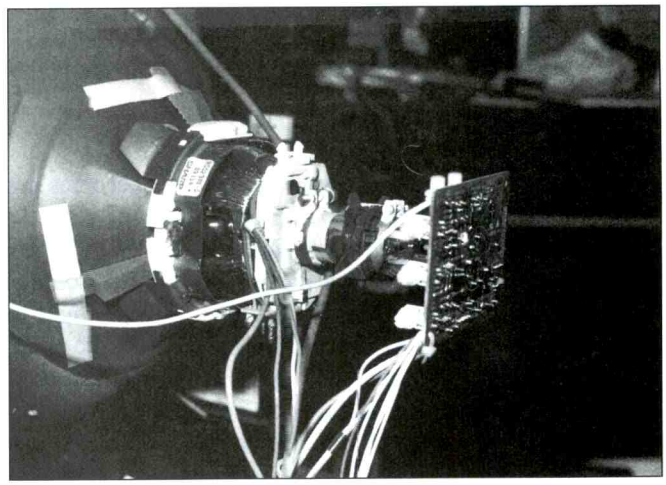

Figure 8. Monitor the high voltage at the anode terminal of CRT for high voltage shut-down problems.

If you encounter a problem of high-voltage shutdown, monitor the HV at the anode terminal of the CRT with a high voltage probe. (Figure 8).

In normal operation of the set, the HV is monitored by diode CR4901, rectifying pulses from the flyback (T4401). If the high voltage increases, the rectified voltage at the cathode of diode CR4901 will increase and trigger zener diode CR4902 into conduction, shutting down the chassis. CR4902 is in series with CR4901, which is connected through R4905 (10kO) to pin 54 of the deflection IC (U1001).

After a few seconds the chassis will reset and turn on again. If the trouble is still present, the high voltage will increase until shutdown occurs once again. This condition will continue until the defective part is found and replaced or the set turns off.

To troubleshoot this problem, disconnect one end of CR4901 from the PCB with desoldering braid and a soldering iron (Figure 9). Plug the TV into a variac or variable ac transformer. Start at around 85Vac and slowly increase the voltage. Record the voltage at which the chassis shuts down. If the high voltage shutdown circuits caused the TV chassis to shut down, you know that the HV shutdown circuits are normal, and therefore the defective component is in the HV or horizontal output circuits. Simply replace CR4901, even if it tests okay.

Besides replacing the horizontal output transistor, check capacitors C4406 and C4402 for open conditions. Measure the 125V source at the cathode terminal of SCR4101. If the B+ voltage is extremely high, even with a lowered ac line voltage, suspect a defective component in the regulated B+ circuits.

If all components test normal, replace R4117 with a 20KO preset control and reset the B+ voltage to read +125V at the SCR4101 or on the collector terminal of the horizontal output transistor. Momentarily short XRP1 and XRP2 together to see if the chassis shuts down after repairs are made, to insure that the HV shutdown circuits are functioning. ■

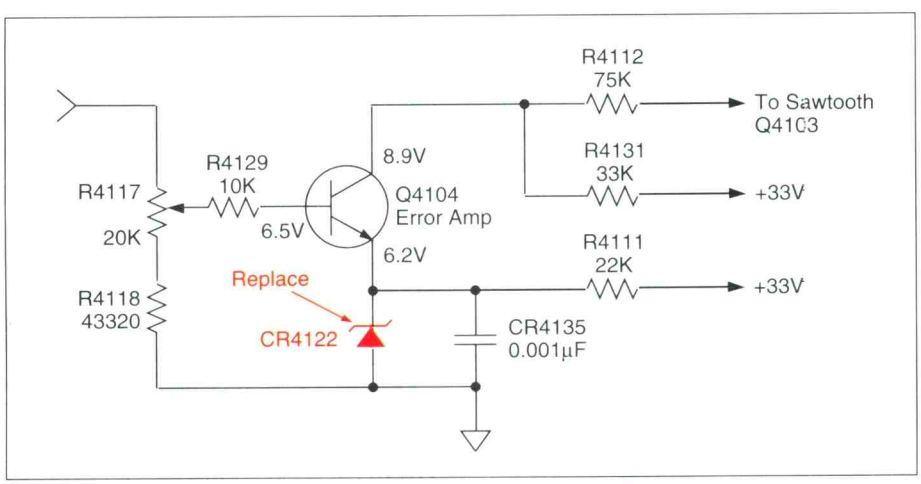

Figure 9. Remove one end of CR4901 from the PVB to check for HV shutdown problems.

Computer Software Diagnostics

Most consumer electronics products are designed to perform a single purpose. A television set receives a radio frequency signal that contains audio and video information, and processes it so that the sound is heard from the speakers and video is seen on the screen. A VCR processes audio and video information that is recorded on tape and presents it to a monitor or TV set.

A personal computer is not like most consumer electronics products. It can perform a seemingly limitless number of functions: calculation; word processing; data storage, manipulation and retrieval; personal calendar management; communication; audio manipulation and reproduction; video manipulation and reproduction; publication creation. The list goes on and on.

Moreover, unlike a more typical consumer electronics product which comes prebuilt, in a box, a computer consists of a number of subsystems that the purchaser can specify. For example, the computer might have a hard drive that can hold 1Gbyte (one billion bytes) of data, or it might have 60Gbytes. The computer might have 64Mbytes of RAM, or it might have 128Mbytes, or 256, or more RAM.

These days the computer is almost certain to have a CD-ROM drive, but is it just a read-only unit, or will it write to disks, or will it even write and then rewrite on those disks? Is it a DVD-ROM that will allow the user to watch a movie on the computer screen?

Still other devices that may or may not be present, depending on the way the purchaser specified it (or the person who modified the computer changed it) include outboard speakers for a higher-quality audio sound card, network card or modem, game ports, USB bus, and others.

Complicating the situation further yet is the fact that every one of those devices has to have a driver: software that makes it work and communicate with the computer. It has been known to happen that driver software (or other software, for that matter) becomes corrupted because of some kind of glitch while something is being written to the hard drive, or on occasion, the user completely erases the software while trying to clean up the hard drive.

Because of all of these variables, when a technician is to service a personal computer, he must first determine what that computer consists of.

Using Diagnostic Software

Let's say, for example, you're looking at a personal computer that has experienced a malfunction; and as luck would have it, all the paperwork is either destroyed or hidden away somewhere. How do you determine what's in the computer? And what is and isn't working right? You might be able to learn a considerable amount of information about the product by inspection, but that could be tedious, and you might not find out all you need to know. A better way to get a handle on the makeup of the unit is to run a diagnostic software product on the computer and let it explore, and report back to you what it finds.

Most diagnostic software can check most of the hardware in the computer. Of course, that will depend on the particular diagnostic software package. Some diagnostic software is deliberately limited-purpose, and will only check certain portions of the computer, such as the hard disk, or memory. And, if the software was produced before the introduction of a particular peripheral, it won't be able to test that peripheral because the program designer would not have been aware of that device. For that reason alone, it always makes sense to use the most up to date diagnostic software available.

It is important to closely follow the instructions that come with diagnostic software. For example, the directions may tell you to close down all unnecessary programs when using the program. This may be in order to be sure that the operating software isn't using some of the memory locations that the diagnostic software needs to operate properly. If you fail to follow those instructions, you may get incorrect results from running the diagnostic software.

What Can Diagnostic Software Do?

Here is a partial list of some of the functions that a diagnostic software package can perform. This set of functions is taken from the promotional information provided by Ultra-X for their QuickTech Professional, professional-level PC diagnostic software, but many other diagnostic software products offer similar functions. The suite includes QuickTech Pro and QuickTech Personal. The software supports PC 486 through Pentium 4 systems including systems with AMD and Cyrix processors.The software requires no installation, simply insert the disk in your floppy drive and boot.

This should not be construed as an endorsement by ES&T of this or any other product. We merely felt that using information about an actual diagnostic software package would help illustrate the types of functions that are available.

This program is designed to run in two modes. In Self-Boot(SB) mode, the software uses direct hardware access commands to perform true low-level diagnostics. If testing requires an Operating System, the technician can boot to a DOS prompt and run.

The software presents four menus; Quick Inventory, System Configuration, Diagnostics, and Burn-In.

When selecting Quick Inventory and System Configuration, the software provides a wide range of diagnostics. It displays up to 65 pages of system information. This information will detail number of devices, brand names, and serial numbers. Other information include; DMI/SMI, PCI, PnP, APM, ACPI, ESCD, BIOS 32, IDE, ATAPI, SCSI, RAM, and more. This information can be viewed on screen, saved to a file, or sent to a printer.

Diagnostics in the software include 57 motherboard tests, 28 harddrive tests, 9 floppy drive tests, 15 CD-ROM, DVD, CDRW, ARMD (Zip and LS120) tests, 20 COM port tests, 25 parallel port tests, 20 modem tests,

21 printer (parallel) tests, 15 video graphics tests, 9 monitor tests, sound card tests, speaker test, mouse tests, an individual test for each keyboard key, 24 unique and proprietary algorithm memory tests and more.

When the Computer Won't Start at All

Diagnostic software is great as an aid in solving a number of personal computer hardware and software problems. There are times, however, when a personal computer won't start at all. When that happens, disk-based diagnostics are useless.

There is a class of diagnostic product that can help fix this type of problem; POST (power-on self test) printed circuit boards. These devices are plugged into a spare expansion socket on the personal computer's mother board. Then when power is applied, and the computer goes through its power on self test process, the results of that procedure are captured by the POST board. If the video circuitry and the monitor are working, the appropriate information may appear on the monitor. If the video is not working, the POST circuit board contains LEDs that will read out information that will help the technician determine why the POST failed, and correct the problem.

Network Diagnostics

Individual personal computers present significant problems to the service technician when he's trying to correct a malfunction, and diagnostic software, as we have seen, can help in that effort. When the problem exists within a network of computers, the difficulties multiply. Fortunately, there are diagnostic software packages that are designed to aid in solving just that type of problem.

Once again, we'll use a real-world diagnostic software package to illustrate the types of tests that diagnostic software is capable of performing. And, once again, we aver that ES&T does not endorse this or any product. The SolarWinds 2001 Toolsets contain a range of network discovery, diagnostic, management, and monitoring tools. There are 4 versions available, starting with the Standard Edition which contains 12 tools. Next up is the Professional Edition containing all the tools in the Standard Edition plus another 14. Followed by the Professional Plus Edition, all the tools in the Professional Edition, plus SNMP Brute force password Attack Program. Top of the heap is the Engineer's Edition containing 36 essential tools.

Netscan Tools Pro 2001 is an enhanced set of internet information gathering utilities presented in a convenient tabbed window. The technician can use it to determine ownership of IP addresses, translate IP addresses to hostnames, scan networks, port probe target computers for services, validate email addresses, determine ownership of domains, list the computers in a domain and more

NetScanTools! is an application that brings many classic UNIX network client utilities into an easy-to-use Windows environment: Name Server Lookup

50th ANNIVERSARY

ae andrews electronics

Stocking the Largest Inventory of O.E.M. Parts, Accessories, and Service Literature in the Country!

SONY JVC
TOSHIBA AIWA
TECHNICS SHARP
PANASONIC ZENITH
QUASAR HITACHI
RCA/GE PROSCAN
*Premier Distributor

➥ Over a 90% Fill Rate
➥ No Minimum Orders
➥ FREE or Discounted Freight Program
➥ Backorder Reports with ETA's Mailed Biweekly
➥ Factory Authorized
➥ No Handling Charges
➥ Fast, Efficient Research

Over 1/4 MILLION Different Parts in Stock
Shipped the Same Day*!

*We routinely ship over 90% of all orders the same day.

Phone (800) 289-0300 Fax (800) 289-0301
25158 Avenue Stanford, Santa Clarita, CA 91355
orders@andrewselectronics.com

Circle (22) on Reply Card

(NSLOOKUP), Ping, Traceroute, Finger, Whois, Time Sync, Daytime, Quote, Chargen, Echo, Ident Server, Winsock Info, Services and Protocols database checks, a simple TCP Terminal, NetScanner with integrated Whois and port activity checker, Hosts file Management.

Network Instruments Observer is a protocol analyzer. Running on a Windows platform it provides full packet capture and analysis. Observer extensions extend its capability to retrieving data from SNMP devices and RMON probes, automatic intelligent data analysis and data link analysis.

Network Instruments Link Analyst provides graphical mapping of network devices, uptime monitoring for device response times, and a trigger based active notification system to warn of network problems as they happen. If network conditions degrade, Link Analyst can monitor the severity of that degradation and warn of trends that may indicate an impending failure. Graphical device mapping is combined with real-time response-time monitoring. ANASIL is advanced, software network analyzer of Ethernet networks for Windows 95/98/NT. Prepares in-depth network traffic analysis. Uses point-to-point tests to check reliability and speed of network connections with selected stations. It can capture and decode network packets. Automatically identifies and prepares the list of active network stations. It can discover non-authorized stations connected to the network. Includes programmable protocol decoder. It works in Windows 95/98/NT environment as a 32-bit application.

VisualRoute

VisualRoute is a visual, fast, and integrated ping, whois, and traceroute program

Diagnostic Software Companies

A number of companies manufacture diagnostic software. Below is a list of several diagnostic software companies.

American Megatrends Inc.
6145-F Northbelt Parkway
Norcross, GA 30071-2976
770-246-8600
Fax: 770-246-8791
sales@ami.com
ami.com

Cleveland Institute of Electronics
1776 East 17th Street
Cleveland, OH 44114
216-781-9400
800-CIE-OHIO
Fax: 216-781-0331
Instruct@cie-wc.edu
www.cie-wc.edu

Computer Services of America
4 Technology Drive
Londonderry, NH 03053
603-644-5005
800-255-7815
Fax: 603-644-4645

CSTS Inc.
4123 East La Palma
Anaheim, CA 92807-1813
714-961-2787
Fax: 714-961-6010
Csts@csts.com
www.csts.com

Data Depot, Inc.
1710 Drew Street
Suite 1
Clearwater, FL 34615-6213
813-446-3402
800-275-1913
Fax: 813-443-4377

Eagan Technical Services, Inc.
1408 Northland Drive
St. Paul, MN 55120
612-688-0098
800-285-1873
Fax: 612-688-7829

Electronic Software Developers
826 South Main Street
South Farmingdale, NY
11735-4152
516-293-0298
800-621-8477 (TIPS)
Esd@bcccom.com
www.servicetips.com

Electronix Corporation
1 Herald Square
Fairborn, OH 45324
937-878-9878
800-223-3205
Fax: 937-878-1902
sales@electronix.com
www.repairworld.com

Electroservice Laboratories
6085 Sikorsky Street.
Ventura, CA 93003
805-644-2944
805-644-5006
Info@esl.com
www.esl.com/

EURAS USA, Inc.
PO Box 2036
Waterloo, IA 50704-2036
319-236-2000
800-453-8727
Fax: 319-236-2020
Info@euras.com

Fessenden Technologies, Inc.
116 North 3rd Street
Ozark, MO 65721
417-485-2501
417-581-4063
Fax: 417-485-3133

Gibson Research Corp.
27071 Cabot Rd., Suite 105
Laguna Hills, CA 92653
949-348-7100
800-736-0637
Fax: 949-348-7110
www.grc.com

JDR Microdevices
1850 S. Tenth Street
San Jose, CA 95112
408-494-1400
800-538-5000
Fax: 408-494-1420
Sales@jdr.com
www.jdr.com

M.A.T. Electronics
400 Pike Road
Huntingdon, PA 19061
215-364-7667
800-628-1118
Fax: 215-364-7667
mike@matelectronics.com
www.matelectronics.com

Micro 2000, Inc.
1100 East Broadway
Suite 301
Glendale, CA 91205
818-547-0125
800-864-8008
Fax: 818-547-0397

Northwest Performance Software
PO Box 148
Maple Valley, WA 98038
425-413-0354
Fax: 425-413-0639
www.netscantools.com

Ontrack Data Recovery, Inc.
1922 Isaac Newton Square
Reston, VA 20190
703-821-8101
Sales@ontrack.com
www.ontrack.com

Panasonic Services Company
20421 84th Avenue S.
Panazip: 2B-6
Kent WA 98032
800-833-9626
253-395-0820

Protel Technology
5250 N. Edgewood Drive
Provo, UT 84604
800-419-4242

RG Software, Inc.
9015 E Via Linda
#107-223
Scottsdale, AZ 85258-5410
602-657-6900
602-657-6815
Rgsoftware@rg-av.com
www.rg-av.com

SolarWinds.Net
8221 E. 63rd Pl
Tulsa, OK 74133
918-307-8100
Fax: 918-307-8080
www.solarwinds.net

Sony Service Co. Parts Div
National Parts Division
8281 N.W. 107th Terrace
Kansas City, MO 64153
816-891-7550
800-821-5662

Specialized Prods Co.
1100 S Kimball Ave
Southlake, TX 76092-9009
817-329-6647
800-866-5353
Fax: 817-329-6195
Spc@specialized.net
www.specialized.net

Tech Assist, Inc.
18830 US Highway 19N #323
Clearwater, FL 33764
727-547-0499
800-274-3785
Fax: 727-547-0768
Info@toolsthatwork.com
www.toolsthatwork.com

Touchstone Software Corp.
2130 Main Street
Suite 250
Huntington Beach, CA
92648
714-969-7746
714-969-1555
www.checkit.com

TV Man Tech Tips Inc.
8614 State Road 84
Fort Lauderdale, FL 33324
954-349-2455
800-474-3588
Tvman@safari.net
www.safari.net/-tvman

Ultra-X, Inc.
1765 Scott Blvd
Suite 101
Santa Clara, CA 95050
408-261-7090
888-722-3734
Fax: 408-261-7077
pcdiag@uxd.com
www.uxd.com

Visualware, Inc.
14425 Glencrest Circle
PO Box 231149
Centreville, VA 20120-1149
866-847-9273
703-802-9006
Fax: 703-832-8979

Warrantech Corp.
300 Atlantic St.
Stamford, CT 06901
203-975-1100
800-544-9510

Windsor Technologies, Inc.
130 Alto Street
San Rafael, CA 94901
415-456-2200
415-456-2244
Sales@windsortech.com
www.windsortech.com

that automatically analyzes connectivity problems, displaying the results on a World map. Combines ping, whois, and traceroute all into one program with the point and click ease of a graphical interface so you can easily establish where the connectivity problem lies and who is responsible..

VisualPulse

VisualPulse provides enterprise-wide real-time and historical reports on network latency and packet loss. And with a browser-based Java-enhanced GUI, you can access VisualPulse from anywhere. ipPulse! is a Remote Status Monitoring Tool. Use ipPulse to monitor the up/down status of IP connected devices (nodes) on any IP connected network. ipPulse uses a variety of methods, including ping, tcp connects, and SNMP to poll and check the network connectivity of a list of user-defined nodes. ipPulse alerts you to failures using a variety of techniques ranging from audible messages to email and pager notification.

NeoTrace Pro is a tool for checking information on Internet sites. You can trace any computer on the internet simply by entering an email, IP address or URL. The display shows you the route between you and the remote site including all intermediate nodes and their registrant information.

CommView is an application for capturing and analyzing network packets. It features an intuitive interface that allows you to view all network connections, and powerful tools for decoding, filtering, and logging packets.

SmartWhois is a handy utility for obtaining information about any IP address, hostname, or domain in the world. Unlike standard whois utilities, it automatically delivers information associated with an IP address or domain no matter where it is registered geographically.

Essential NetTools is a toolkit useful in diagnosing networks and monitoring your computer's network connections.

DIGISecret is an easy-to-use, secure, and powerful application for file encryption and sharing. It utilizes strong and time-proven encryption algorithms for creating encrypted archives and self-extracting EXE files and for sharing files with your associates and friends. DigiSecret also includes powerful and intelligent file compression; you no longer need .zip files when you can have encrypted and compressed DigiSecret files.

WS_Ping Pro pack provides all the basic network information tools you need to track down network problems or to get information about users, hosts, or subnets on the Internet (or on your intranet). Tools include Info, Time, HTML, Ping, Traceroute, DNS Lookup, Finger, Whois, LDAP, Scan IP, SNMP, WinNet, and Throughput.

The above describes some of the network diagnostic functions that are available in this type of software. We won't exhaust the subject here in the interest of conserving space. We will, however, provide further coverage of network diagnostic software tools in a future issue. ■

SAMS Has The Service Manuals You Need

Sams Technical Publishing has a database of over 180,000 listings of manuals for electronics repair.

Coverage includes antique radios, CBs, and televisions spanning the past 50 years. Sams also covers Big Screen and Projection sets in **PHOTOFACT GOLD**.

All manuals can be purchased from your local DISTRIBUTOR or directly from Sams Technical Publishing.

5436 W. 78th Street
Indianapolis, IN 46268-4149
800.428.SAMS Fax 800.552.3910
www.samswebsite.com

SAMS Technical Publishing

Circle (23) on Reply Card

Microprocessors: Devices for Computers and Control

by John A. Ross

A microprocessor functions as the central processing unit for a computer system and processes system data; controls other devices within the system; and communicates with peripheral devices. With the integration of a central processing unit, a small portion of random-access memory, a small portion of read-only memory, and input/output ports, microprocessors control the logic of digital devices and exist as the heart of personal computers and workstations. Although the devices have common characteristics, microprocessors differ in the amount of instructions executed; the number of bits processed within a single instruction; and the number of instructions that the processor can execute per second.

Other differences involve the type of architecture used during the construction of the processor. Microprocessors employ either the complex instruction set computing (CISC) architecture, or the reduced instruction set computing (RISC) architecture. As an example, Intel x86 and Pentium processors rely on the CISC architecture. CISC-based processors provide a stable, known architecture for development that translates into the capability of developers to bring products to market quicker. Moreover, the CISC-based processors offer greater performance and higher processing speeds.

In contrast, the limited command set and simpler architecture of RISC processors allows those devices to execute instructions three or more times faster than a CISC processor at any given clock speed. These advantages, as well as smaller physical size, have made RISC processors the choice for embedded solutions used in devices such as personal digital assistants, data communications equipment, set-top boxes, and other consumer information appliances.

Embedded and Non-Embedded Microprocessors

In the recent past, microprocessors could be lumped together under a single heading. However, the overall category of microprocessors has separated into the non-embedded microprocessors and embedded processors. While non-embedded microprocessors function as the heart of personal computers, embedded microprocessors have become used within everything from laser printers, cellular telephones, industrial controls, and set-top boxes to information appliances.

As technologies evolve, the distinctions between embedded and non-embedded processors will continue to grow. Moreover, the embedded market will see an increased convergence between microprocessor, microcontroller, and DSP (digital signal processing) technologies that will make the tracking of market trends more difficult. As an example of this market convergence, new set-top boxes contain microprocessors that include DSP functions. When bringing the two processing technologies together, the companies gain sheer processing power and much lower system costs. A single RISC-processor-based design that includes DSP functions eliminates the need for a DSP processor and the required memory subsystem for the DSP. In addition, the use of one processor dramatically reduces development time.

Embedded Microprocessors

An embedded microprocessor functions as a part of a larger device or system and includes instruction sets that initiate a particular task. For most purposes, an embedded microprocessor uses an architecture derived from standard archi-

RISC-BASED MICROPROCESSORS

Because new applications continue to evolve, the demand for high-speed RISC microprocessors has grown substantially. The performance gains seen within embedded microprocessor technologies, where the number of instructions per second has grown from several million to over 2000 million instructions per second, have occurred because of the capability to place millions of transistors on a single chip. In turn, this has led to superscalar architectures with multiple-integer and floating-point execution units, and high levels of pipelining.

Superscalar architectures that have multiple execution units provide the capability to execute two or more instructions simultaneously. Superior pipelining schemes add pipeline stages to the processor and allow the placement of multiple instructions in the CPU execution queue. As a result, new instructions in the pipeline begin with each clock cycle. Each of these architectural improvements has led to the addition of more complex instruction sets to superscalar processors.

Because of the increase to 128-bit wide buses in microprocessors such as the Alpha, CPU word lengths have grown from 16 to 64 bits. These 64-bit data words can be divided into 2, 4, and 8 subwords. As a result, a processor involved with digital signal processing, image processing, or multimedia applications can perform as many as eight parallel computations on the data words.

The improved computational power also results from minimum clock speeds of 200MHz to maximum clock speeds of 600MHz and higher along with exceptional integer and floating point performance. At the high end, data throughput may reach 2 billion instructions per second. Each of the improvements in computational power and throughput also requires the addition of large caches; the use of dynamic execution control; the implementation of multiple execution units; and advances in register logic and branch prediction.

Plan now and budget now for the main event of the business year for:

Manufacturers • Distributors • Representatives of:
Components • Instruments • Datacom • MRO • Production

When the going gets tough...

The tough get going. Now more than ever you have to be aggressive about seeking new opportunities, shoring up critical relationships.

Constrained travel budgets?

At EDS, you see more people in less time, and accomplish more business, than any other way, any other place. One trip does the work of 30.

But nobody's buying anything!

That may be true today, but the smart money says that the recovery will begin by the middle of the second quarter, if not sooner. So EDS timing is perfect.

The future remains uncertain... but EDS is a sure thing!

EDS 2002
Electronic Distribution Show & Conference

Tuesday-Wednesday-Thursday • May 14-15-16
Workshops and Keynote Monday May 13

Las Vegas Hilton Hotel • Las Vegas NV U.S.A.

What Manufacturers Accomplish at EDS

- Introduce new products and programs
- Recruit new distributors and reps
- Solve problems, review markets, set goals
- Network with colleagues and competitors
- Hold national sales meetings
- Meet the press at the key event for the channel media
- Get new ideas and new insight, in workshops, meetings, and casual conversation

What Distributors Accomplish at EDS

- See everyone in the industry who counts
- Meet vendors' top brass face to face
- Get fresh information on supplier strategic initiatives
- See new products, find new sources,
- Solve problems, review markets, set goals
- Network with colleagues and competitors
- Meet the press at the key event for the channel media
- Get new ideas and new insight, in workshops, meetings, and casual conversation

What Representatives Accomplish at EDS

- Meet with principals
- Get information on new initiatives and strategies
- Bring distributors and principals together
- Look for new lines
- Attend sales meetings
- Compare notes with peers
- Get new ideas and new insight, in workshops, meetings, and casual conversation

What Everyone Accomplishes at EDS

- Idea exchange
- Networking - with more opportunities than ever
- Updates on the hot industry issues
  - eCommerce
  - Globalization
  - Supply chain management
  - Impact of EMS
  - Authorized and independent distribution
- Meet with the Decision Makers
- See more people in less time and for less money than anywhere else!

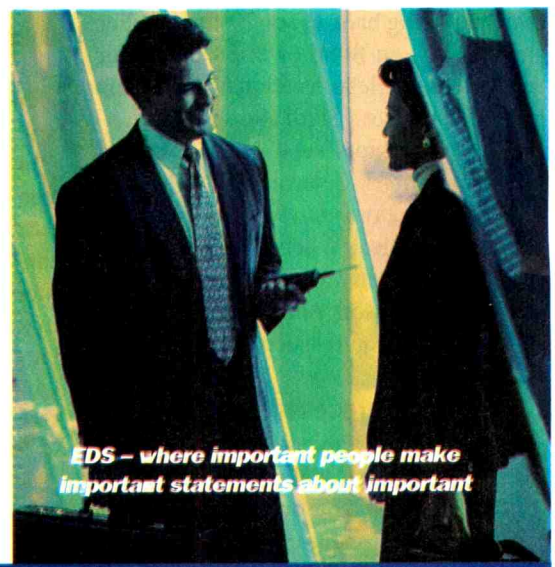

ELECTRONIC DISTRIBUTION SHOW CORPORATION
222 South Riverside Plaza, Suite #2160 • Chicago, IL 60606
Voice: 312.648.1140 • Fax: 312.648.4282 • E-Mail: eds@edsc.org • www.edsc.org

Circle (24) on Reply Card

tecture microprocessors. Further, these devices are generally driven by real-time operating systems and do not contain on-board ROM. The process of developing an embedded system involves writing programming code and then developing a debugging operation that examines the code running on the target. Developers rely on design tools to check the robustness of the system; the loading of the CPU; the number of queued tasks; the number of blocked operations; and other possible problem areas.

Defining Microprocessor Performance

Although CPUs with different internal architectures may function differently and may operate faster with some tasks and slower with other tasks, two key standards define the performance of microprocessors. Speed and "width" combine to either negate or boost the performance of the processor because of the effect on processing efficiency. Measured in MHz and GHz, speed covers the number of instructions that an MPU can process, in millions or trillions cycles per second.

Newer microprocessors such as the Athlon or Pentium III can execute more instructions per cycle than older processors such as the Pentium II, Pentium, or 80486. Going back to some of the earlier processors, an 8086 or 8088 processor executes a single instruction over an average of 12 cycles. Sixth and seventh generation processors such as the Pentium Pro, Pentium III, Celeron and Athlon can execute as many as three or more instructions per cycle. When considering the processing speed of a microprocessor, all modern processors run at some multiple of the motherboard speed.

Microprocessor Width

The width of a microprocessor covers the number of internal registers, the size of the data input and output bus, and the size of the memory address bus. Therefore, microprocessor width defines the number of data bits that can transfer into or out of the processor in one cycle. In addition, the width of the data bus also defines the size of a bank of memory. The individual parts of the microprocessor are described in the next few segments.

MICROCONTROLLERS

Almost every consumer electronics device or home appliance incorporates some type of microcontroller. Typically including a central processing unit; random-access memory; erasable programmable read-only memory; serial and parallel I/O ports; timers; and an interrupt controller, a microcontroller controls some type of process or some aspect of the environment.

Embedded microcontrollers work on the same principle as microcontrollers but usually require the connection to external components before operations can begin. As an example, many embedded microcontrollers require a connection to external system memory because of the processes needed to complete a task.

Internal Registers

A register operates as a holding cell within the processor. During operation, the microprocessor can add numbers in two different registers and then store the result in a third register. The size of the internal registers defines the quantity of information that a microprocessor can operate with at one time and determines how the processor moves data internally.

In addition, register size describes the type of software or commands and instructions that the microprocessor can run. For example, processors with 32-bit internal registers can run 32-bit instructions that, in turn, process 32-bit sets of data at a time. An older processor equipped with 16-bit registers cannot run 32-bit instructions or process 32-bit sets of data at one time.

In most instances, a microprocessor will utilize internal registers larger than the data bus. As a result, the device will require two cycles to fill the register before an operation can occur. For example, all Pentiums have a 64-bit data bus and 32-bit registers. To transfer data efficiently, the Pentium processor utilizes two internal 32-bit pipelines for processing information and operates as if two 32-bit devices were integrated into one. Consequently, the 64-bit data bus can efficiently fill the multiple registers.

Superscalar Architecture

Superscalar architecture functions through the use of multiple pipelines for the transfer of data. As microprocessor technologies move into the sixth and seventh generations, the devices often feature as many as six internal pipelines for executing instructions or for special operations. Newer processors can execute as many as three instructions in one clock cycle.

Data and Address Buses

Digital information in a computer exists as individual data bits and moves along single lines. With the combination of data transport lines forming a bus, a microprocessor that has a wider data bus can transfer more individual data bits in a shorter time. All processors in the Pentium family have 64-bit data buses and can simultaneously transfer 64 bits of data to and from the system memory.

The address bus carries the addressing information used to describe a memory location for data transfer. Address bus width indicates the total number of address locations and the maximum amount of random-access memory that the processor can address. Even though no relationship exists between the size of the data bus and the address bus, processors with larger data buses have larger address buses.

Cache Operations

Every processor includes an integrated area of very fast memory called the cache that holds some of the current working set of code and data. The processor can access cache memory with no wait states because the memory access occurs at the same speed as the processor core. Given the integration and speed, the use of cache memory reduces system-wide bottlenecks that could occur between the processor and the system memory. Without the on-board primary, or L1,

cache, the processor would wait for code and data from the much slower main memory and would have slower performance.

Processors also utilize a secondary, or L2, cache. Along with holding information that transfers to the CPU, the L2 cache also compensates for any "cache miss" that may occur in the L1 cache. A cache miss occurs when the processor attempts to fetch an operand not held in the cache and stalls the processor. Although older processors relied on an external L2 cache, all current processors feature an on-die L2 cache that runs at the speed of the processor. Having two levels of cache between the very fast CPU and the slower system memory minimizes any wait states for the processor and allows the processor to keep working closer to its true speed.

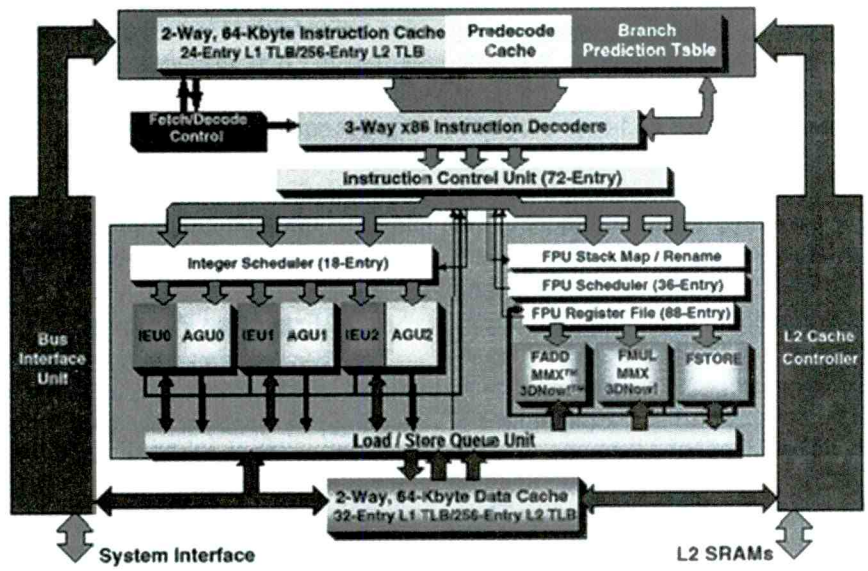

Figure 1. Figure 1 is a functional diagram of an AMD Athlon Micrprocessor.

Four-Way Set Associative Cache

The organization of the cache memory is split into four blocks called a four-way set associative cache. In turn, each block is organized as 128 or 256 lines of 16 bytes with each block storing different lines of main memory. As a result, the four-way cache allows multitasking environments to simultaneously operate with different areas of memory simultaneously, thus improving performance.

Write-Through and Write-Back Caching

Because the contents of the cache must remain in sync with the contents of the main memory to ensure that the processor works with current data, microprocessors utilize write-through caching. In write-through caching, the processor writes information out to the cache while the same information is automatically written through to main memory. Newer micro-

PROGRAMMABLE DIGITAL SIGNAL PROCESSORS

Programmable digital signal processors combine programmable options, portability, fast computational speeds, and precision while allowing applications to convert analog signals to the digital domain. As a result, programmable DSPs have become the center point for the wireless communications, networking, and mass storage device industries. In addition, DSPs are found in household appliances, industrial controllers, mobile phones, and set-top boxes.

Programmable DSP applications deal with analog signals or signals that involve a continuous variable defined with infinite precision. The applications for programmable DSPs become more apparent through a brief discussion of the unique features of the device families. With a programmable DSP, all input signals arrive from the real world. Because of this direct connection to real world signals, the DSP must react in real time and must measure and convert real world signals, such as analog voice, to digital numbers. In addition to having real world signals as input signals, DSPs utilize discrete signals where the information samples are lost.

In less than a decade, digital signal processors, or DSPs, have evolved from simple integrated circuits based on digital signal processing algorithms to special-purpose devices that combine connectivity with interactivity. As embedded devices, DSPs provide extremely fast computational speeds and precise processing of information. By definition, digital signal processing involves the changing or analysis of information when the information is measured in discrete sequences of numbers. Given that definition, digital signal processors have become integral parts of household appliances such as washers and dryers, digital cellular phones, and storage devices.

Programmable digital signal processors offer versatility through programmable options and portability that allows the porting of digital systems to different hardware. In addition, DSPs offer the benefits of easy duplication; little dependence on strict component tolerances; and resistance to temperature drift. The use of digital signals—rather than analog—to complete computational tasks also adds simplicity to the system. With DSP applications, analog-to-digital conversion connects man to machine through multimedia signals such as speech recognition, audio, images, and video. A DSP application converts analog signals to the digital domain for processing and then back for playback or display. All this occurs through the computational-intensive processing of real-time signals.

processor designs also use internal write-back cache that improves performance by caching both reads and writes. While the write-through cache updates both the system memory and the cache memory after the processor executes a command, the write-back cache updates only the cache. Updates of the system memory occur when the block is removed from the cache. In addition, the improved caching designs use a technique called non-blocking to reduce or hide memory delays. Program execution occurs concurrently with cache misses as long as the process does not depend on the missing data.

An Example Microprocessor: The AMD Athlon"! Microprocessor

Figure 1 is a functional diagram of an AMD Athlon Micrprocessor. Designed as a seventh-generation microprocessor, the AMD Athlon microprocessor meets the computation-intensive requirements of software applications running on high-performance desktop systems, workstations, and servers. To meet these demands, the AMD processor architecture utilizes a high-speed core that includes:

- multiple x86 instruction decoders,
- a dual-ported 128-Kbyte split L1 cache,
- three independent 10-stage integer pipelines,
- three 15-stage address calculation pipelines, and
- a superscalar, fully pipelined, out-of-order, three-way floating-point engine.

Multiple Decoders

The AMD Athlon processor includes three full x86 instruction decoders that translate x86 instructions into fixed-length sections called MacroOPs for higher instruction throughput and increased processing power. Rather than executing the x86 instructions that may vary in length from one to fifteen bytes, the processor executes the fixed-length MacroOPs. In this manner, the processor can maintain the instruction coding efficiency found in x86 programs.

Instruction Control Unit

The decoding of the MacroOps allows the processor to transfer a maximum of three MacroOps per cycle to the instruction control unit. Operating as a 72-entry buffer, the ICU manages the execution and retirement of all MacroOPs, performs register renaming for operands, and controls any exception conditions and instruction retirement operations. In addition, the ICU transfers the MacroOPs to multiple execution unit schedulers.

Execution Pipelines

The 18-entry integer/address generation MacroOP scheduler and a 36-entry floating-point unit/multimedia scheduler issue MacroOPs to the nine independent execution pipelines. Three of the MacroOps designate for integer calculations, three occur for address calculations, and three allow the execution of MMX, 3DNow!, and x87 floating-point instructions.

The three-issue, superscalar floating-point capability found in the processor relies on three pipelined, out-of-order floating-point execution units with each having a one-cycle throughput. Using a data format and single-instruction multiple-data operations based on the MMX instruction model, the AMD Athlon processor can deliver as many as four 32-bit, single-precision floating-point results per clock cycle and has a peak performance of 2.4 Gigaflops at 600 MHz. A single Gigaflop equals one billion floating-point operations per second.

Caching for the AMD Athlon Microprocessor

The cache architecture for the Athlon microprocessor includes an integrated L1 cache with two separate 64-Kbyte, two-way set-associative data and instruction caches. In addition, the processor integrates a scalable L2 cache controller that has a 72-bit interface to as much as 8-Mbyte of system memory. While the data cache has eight banks to support concurrent access by two 64-bit loads or stores, the instruction cache contains predecode data to assist multiple, high-performance instruction decoders. The L2 cache controller operates at a programmable frequency for compatibility with a variety of industry-standard memory devices.

The Athlon System Bus

The 200MHz system bus implemented in the AMD Athlon processor can deliver a peak data transfer rate of 1.6 Gbytes per second. Because the processor relies on source synchronous clocking design, the system bus can scale for an operating speed beyond 400 MHz. Given these design characteristics, the 200-MHz AMD Athlon system bus provides:

- packet-based transfers for improved transaction pipelining,
- large 64-byte burst data transfers,
- 8-bit ECC protection of data and instructions, and
- the ability to address more than eight terabytes of physical memory.

Enhanced 3Dnow! Technology

The Athlon processor operates with Enhanced 3Dnow! technology that improves integer math calculations for speech, video encoding, streaming applications, and improved data movement for Internet applications. Enhanced 3Dnow! builds from the early MMX technology, which has 57 additional instructions for graphics and sound processing and the 3Dnow that adds 21 additional multimedia instructions to the MMX set. This system adds an additional 24 instructions to the combination. All this allows the processor to answer the growing processor and bandwidth requirements of software, graphics, input-output devices, and memory.

The Enhanced 3Dnow! instructions include:

- Twelve instructions that improve multimedia-enhanced integer math calculations used in such applications as speech recognition and video processing
- Seven instructions that accelerate data movement for more detailed graphics and functionality for Internet browser plug-ins and other streaming applications, enabling a richer Internet experience
- Five digital signal processing instructions that enhance the performance of communications applications such as soft modems, soft ADSL, MP3, and Dolby Digital surround sound processing. ■

Need an Inexpensive Test Jig?

by Bob Rose

If you service large screen TVs, you may have thought about how handy a test jig would be, especially if there's only one technician in your service center: you. Let's assume that you have just gotten a call from a customer who has a problem with the 35-inch RCA television set in her living room. You load your van and arrive at her house to discover (surprised?) that you need to bring the unit to the service center for repair. You have two choices: try to load the monster by yourself, or remove the chassis from the cabinet, and leave the cabinet in the home. If you have a test jig in your service center, you naturally choose option two. If you don't have a jig, you are faced with option one, which even under the best of circumstance involves an almost inhuman amount of work!

A jig comes in handy in other ways. It permits you pull the chassis out of a TV you have in your service center and work on it in an ergonomically beneficial setting. There is nothing like trying to work on a chassis while it is in, let us say, a large cabinet that is too big to put onto a table. Moreover, a test jig has fantastic diagnostic potential. For example, I had in my service center a 27-inch Zenith that I thought might have a defective picture tube. If I tapped on the video output circuit board, I could make the symptoms of gray raster with white retrace lines come and go. However, I couldn't make them come and go if I just tapped on the neck of the tube. Was the problem with the tube or the sophisticated video output circuit board? I pulled the chassis and hooked it up to my test jig and found that it had the same symptoms there as it did in the TV. The problem was the CRT socket. A defective CRT socket used to be a reasonably common fault. I have now seen it just twice in the last ten years. My jig, you see, kept from installing a new picture tube to solve a problem that was located elsewhere in the chassis.

What is a Test Jig?

If you are a newcomer to the world of television repair, you may not be familiar with the piece of test equipment about which I am writing. I will, therefore, take a few minutes to describe it to you. A jig is essentially a 19-inch picture tube mounted inside a cabinet that has been configured to permit you hook a television chassis to it. You configure the chassis to the jig by connecting the yokes, CRT socket, and the high voltage lead from the chassis to the jig by using a set of cables. When the connections have been established and checked, you simply fire up the chassis and use the CRT inside the jig to make whatever repairs to the chassis are necessary.

You may be wondering how the vertical and horizontal deflection circuits of, for example, a chassis from a 35-inch set could be hooked to a 19-inch picture tube. Telematic, the premier manufacturer of the jig, used a matching network, which was basically a ferrite-core transformer and a series of yoke plugs designed to mate the transformer to the chassis under repair. It also incorporated two wafer switches that permitted the tech to choose among a number of impedance settings, ensuring as smooth a match between the two as possible. The match was never perfect, but it was workable in almost all instances.

The drawback was price. Telematic sold its basic test jig for slightly less than a thousand dollars. The impedance matching transformer, focus block, and yoke connectors, of which there were dozens, were sold separately. It was possible to get a set-up that could be used for many different chassis for about $1,500.

I debated for a long time about whether to buy a Telematic jig. After all, $1,500 is a nice chunk of change. Moreover, I couldn't justify the expense because we weren't getting that many large screen TV's to repair. But I did locate a used jig what was several years old. It worked with the newer chassis, but it didn't work well. My relationship to it was tenuous, and I didn't shed a tear when it expired. When our business changed and we began to repair more and more of the larger sets, the need for such a piece of equipment became apparent, agonizingly apparent. It was then that I discovered that Telematic had gone out of business. It was a case of having the dollar, but being the proverbial day late.

A Home Brew Jig

I don't give up easily,and I kept thinking that there had to be an alternative to Telematic. I belong to two repair groups (NESDANet and Repairworld) that share information among members on a daily basis. To coin a phrase, "If you've got a question, somebody's usually got an answer." I often have to wade through 300 emails in a day, but I consider the time well spent because I get to meet lots of interesting people and have the pleasure of exchanging ideas. If you don't belong to either group, why not get off your duff and join us? Check out www.repairworld.com and www.nesda.com. You will naturally have to spend a little money to join either organization, but you'll get your money back the very first time somebody helps you to fix that dog on which you have been working. And you'll meet some really great people in the process.

Back to my story. Reading the e-mail and chatting with fellow technicians, I discovered that some were using RCA picture tubes as jigs. The more I thought about it, the more logical the practice sounded. Here's why. I have been using a Sencore CRT tester for ten years. I noted that almost all of the picture tubes I have checked use the same CRT socket, the same filament, focus, G1, and G2 settings. In other words, almost every picture tube that I have seen in the last ten years has the same base and pin-out configuration and voltage requirements. That might not be a revelation to you, but it was to me. I had just never thought about it. Moreover, my somewhat limited experience with Telematic jigs indicated that the chassis I deal with on a day-to-day basis have the same yoke impedance, which is the impedance of the vertical and horizontal yokes that you find on most any

RCA picture tube on the market. (I assume you know that RCA picture tubes come with the yoke attached that is, bonded to the neck of the tube.)

Given these facts, I decided to try my hand at it. I had a 27 inch tube (A68AEG10X01) already mounted in a bezel, the chassis having been destroyed by lightning. I dug it out of the recycle bin (I used to call it my junk pile), tested the tube, and cleaned it up. Since my recycle bin usually has what I need, I located two RCA chassis and cut the yoke connections off them.

You probably should know that I live in the heart of Zenith and RCA country. Toshiba, Hitachi, JVC, Sharp, Sanyo, and a few other brands, like Mitsubishi, show up on occasion, but the folks in this area show partiality to RCA and Zenith. I don't live in the Bible belt; I live in "the Zenith belt. I also cut the plug off a Zenith yoke and wired it to one set of the RCA yoke connections. Just to round out the connections, I configured the speakers so that I could hook them up either to Zenith or RCA chassis. If you have followed me, you know that I needed one other connection, namely a way to connect the dag of the CRT to the video output module of the chassis to be tested. I just soldered a clip lead to the existing ground strap on the RCA picture tube, making connecting the two as easy as possible. That completed, I was ready to test the setup.

I began by using a series of RCA chassis that ranged from one out of a 25-inch set to one out of a 31-inch unit. The homemade jig performed flawlessly. What do I mean? I monitored the high voltage, the temperature of the heat sink on which the horizontal output transistor was mounted, and the quality of the picture and found nothing amiss. As a matter of fact, the homemade jig worked better than my old Telematic ever did. Finally, I turned my attention to Zenith and experimented with the same number of chassis and had the same results.

I don't know about the chassis other manufacturers have put out, but at this stage I don't see why the jig wouldn't work as well with them as it did with RCA and Zenith chassis. I'll find out when I get an opportunity.

The Hook Up Arrangement

I think I need to say a few words about the hookup between the jig and chassis to be tested. Some of my acquaintances use clip leads to make the necessary connections. If it works and is safe, that's great. I prefer to use a more stable connection than a clip lead is capable of giving. That is why I cut the plug off a Zenith yoke and soldered it onto the vertical and horizontal leads I salvaged from a defunct RCA chassis. The same goes for speaker connections which, by the way, are optional. You can get by without using them. I prefer to have the speakers connected because the audio constantly reminds me that the chassis I have in front of me is "live." However, to each his own.

A Reservation

I have real reservations about hooking up a chassis in this manner and letting it play for hours on end, but I have no problems letting it play for maybe an hour at a time. I still have the thought in the back of my mind that a technician at the very least ought to do no harm. So, I monitor the chassis under test as closely as I can with that admonition in mind.

The Jig Isn't Perfect

The homemade jig isn't perfect. You can't, for example, hook a 19-inch or 21-inch chassis to it. If you do, the chassis will shut down. But then we don't pull chassis to work on those sets, do we? Most of the chassis I hooked to the jig had vertical height problems. For instance, the 25-inch ones exhibited a slight overscan, but that's no problem as long as you are aware of it. However, the chassis out of the larger sets have an underscan problem and are pulled in on the sides. The picture looks like a neat rectangle in the middle of the picture tube. That's not a problem either as long as you are aware of it. The only adjustment I had to make was to turn the G2 down, usually as far down as I could get it.

Conclusion

Now, I am not an engineer and don't pretend to be one. Which is to say I may have overlooked something of which I need to be aware. I don't think I have, but it is possible. I am a person who has always had an interest in building and experimenting. If my project works, then I am happy. If it doesn't—well, I move on to another. I am delighted with the setup I have. It's cheap; it is easy to use; and it works. What more can I say? I would, however, appreciate your feedback on my little project. I am interested in what you think and in your experience if you have tried such a set up. Let me also emphasize that I am sharing my experience with you, not telling you that you ought to go and do likewise. You'll have to make that decision for yourself.

I want to close this article with a hearty "thank you" for those who not only got me to thinking about the project but also shared their experiences with me, especially the technicians who frequent the Repairworld forum. As one of them says, "Good fixin." ■

ISCET
CERTIFIED ELECTRONICS TECHNICIAN

Your Ticket to
SUCCESS

More than 50,000 technicians worldwide are Certified Electronics Technicians. ISCET offers Journeyman certification in Consumer Electronics, Industrial, Medical, Communications, Radar, Computer and Video. For more information, contact the International Society of Certified Electronics Technicians, 3608 Pershing Avenue, Fort Worth TX 76107; (817) 921-9101.

Name _____
Address _____
City _____
State _____ ZIP _____

__ Send material about ISCET and becoming certified.
__ Send one "Study Guide for the Associate Level CET Test." Enclosed is $16.95 (includes postage/handling). ***TX residents — include 8.25% sales tax.***

ES&T

Circle (25) on Reply Card

ProService Review

January 2002

A trade publication for professionals in the business of repairing consumer electronic equipment, appliances or computers.

An official journal of NESDA (National Electronics Service Dealers Association), and ISCET (International Society of Certified Electronics Technicians).

Purpose

ProService Review, included quarterly in ***Electronic Servicing & Technology,*** is produced by NESDA, the National Electronics Service Dealers Association, 3608 Pershing Ave., Fort Worth, TX 76107. It is intended for the enlightenment, education and entertainment of the members of NESDA, ISCET, and other ethical professionals engaged in or connected with the appliance, computer, and electronics service industries.

With the exception of official announcements, the statements and opinions expressed herein are those of the authors and not necessarily those of the associations.

Unless otherwise clearly indicated, neither NESDA nor ISCET endorses any company, product or service appearing in any article in this publication.

Business and Editorial Offices

3608 Pershing Ave.
Fort Worth, TX 76107-4527
817-921-9061; Fax 817-921-3741
www.nesda.com
Executive Director: Mack Blakely
Director of Communications:
Sheila Fredrickson
Email: sheila@nesda.com
Comm. Assoc./Production:
Stephanie Peistrup
Email: stephanie@nesda.com

Copyright

Copyright © 2002 by NESDA, Inc., all rights reserved. No part of this publication may be reproduced or transmitted in any form or by any means without written permission from NESDA.

National Electronics Service
NESDA
Dealers Association, Inc.

— International Society of Electronics Technicians—

ISCET Training Programs Expand To Mexico

The International Society of Electronics Technicians and the San Diego Community College District (SDCCD) have co-developed a training program.

A Welcome To Instructors

The International Society of Certified Electronics Technicians (ISCET) and the San Diego Community College District (SDCCD) have developed a model training program with a network of vocational training centers for workforce development in Mexico, known as the CECATI *(Centros de Formación para el Trabajo Industrial)*. Since 1998, more than 160 CECATI Electronics teachers have received training to prepare them for the ISCET certification examination at both the Associate and Journeyman levels through a project entitled the Educators Exchange Program, funded by the Ford Foundation in Mexico. Located throughout all 32 states in Mexico, 198 CECATI Centers employ more than 3,500 teachers and provide vocational and technical training to more than 350,000 adult students per year.

ISCET Associate and Journeyman Review Session

Referring to the successful results of the training partnership, George Brownyard, ISCET's President stated that, "ISCET is ready to expand operations and take the lead in providing certification training in Electronics to the growing workforce in Mexico and, eventually, South America." During the past four years the collaborative training effort has grown from one class of 20 participants enrolled in the ISCET Associate certificate training program in 1998 to 80 participants enrolled in four Associate and Journeyman-Consumer exam preparation courses in 2001.

ISCET CET Exam Session

During 2001, three of the four courses offered in Guadalajara, Jalisco, were taught by CECATI instructors who earned their ISCET certification through the Educators Exchange Program.

In 2001, approximately 75% of the participants who attended the training courses passed the ISCET examinations. Since 1998, more than 86 CECATI Electronics instructors have

(Mexico, continued)

(Mexico, continued)

ISCET Board Meets With Ken Fawson, SDCC

earned their Associate certification and 34 have earned their Journeyman certification in a variety of specialties.

According to Dr. Kenneth D. Fawson, SDCCD's Assistant Chancellor for Instructional Services, Economic Development and International Education, "Results from the ISCET/SDCCD CECATI partnership reflect the goals of the District which are to improve binational cooperation, increase cultural understanding and promote sustainable economic development through quality education and workforce training programs." The partnership has produced results that are beneficial to all of the participating institutions. These results include the development of bilingual Electronics curriculum and the translation of ISCET Associate and Journeyman-Consumer exams into Spanish. The CECATI Electronics instructors earned professional credentials and learned new skills that will be transmitted, in turn, to their students who will also take the ISCET exams. During the program, three CECATI Electronics Instructors trained to become ISCET test administrators and are now qualified to proctor ISCET exams throughout Mexico. In the process, both SDCCD administrators and faculty members gained important experience in the development, delivery and evaluation of binational training efforts.

The ISCET/SDCCD partnership has been presented as a model for binational training programs at local, statewide, national and international conferences by Dr. Kenneth Fawson and his staff. In addition to funding from the Ford Foundation in Mexico, the partnership has received funding from the U.S. Government. Much of the bilingual curriculum used in the training program was produced under a Borderlands Workforce Development Project grant from the American Association of Community Colleges (ACCA) and the U.S. Agency for International Development (USAID).

Efforts to strengthen the partnership continue under the leadership of George Brownyard and Dr. Kenneth D. Fawson.

ISCET and the SDCCD are currently working with the CECATI and the Secretariat of Public Education in Mexico to expand the delivery of these "in demand" training programs. During August 2001, Dr. Fawson and two of the lead CECATI Electronics instructors from Mexico, were hosted by ISCET at the National Professional Service Convention that was held in Las Vegas.

During the coming year, NESDA, ISCET Executive Director, Mack Blakely, and George Brownyard will serve as Advisory Board members on a recently awarded federally funded international business education project grant from the U. S. Department of Education entitled the CAL-MEX-NET Project. The goal of the CAL-MEX-NET Project is to develop a web site to form a virtual network of educational institutions, businesses, industries and professional associations that are doing business on both sides of the U.S./Mexico border.

The CAL-MEX-NET Project will also sponsor a binational conference in San Diego to help develop connections between U.S. representatives from education, industry, professional organizations, trade associations and their counterparts in Mexico.

For more information, please contact:

George Brownyard
President, ISCET
C/O ISCET
3608 Pershing Avenue
Ft. Worth, Texas 76107
Tel. 817/921-9101
(Direct) 858/495-0392
GBrownyard@aol.com

or

Kenneth D. Fawson, Ed.D.
Assistant Chancellor
Instructional Services and
Economic Development
San Diego Community College District
3375 Camino del Rio, S.
San Diego, CA 92108
Tel. 619/388-6965
Fax. 619/388-6523
kfawson@sdccd.net §

2002 Yearbook Now Available

ProService Yearbook is THE annual directory for professionals in the appliance, computer and consumer-electronics industry.

The ProService Yearbook & Directory is completed and will be mailed to members of NESDA and ISCET in January 2002. The Yearbook is THE resource listing for members of NESDA and ISCET, mailed to members of each association on a yearly basis. Orders are being taken for non-members wishing to purchase a yearbook.

NESDA and ISCET members receive one copy free of charge. However, additional books will be available. The first one is $25, if not a NESDA or ISCET member. Otherwise each additional copy is $15.

If you are interested in purchasing this valuable resource that can be used year-round, please complete and return the form below.

Mail to: NESDA Directory, 3608 Pershing Ave., Fort Worth, Texas 76107-4527. If you have any questions about the directory, contact Sheila Fredrickson at 800/797-9197 ext. 15.

❑ Send ____ copies of the 2002 Directory.

$15 for NESDA/ISCET members

First one is $25, if not a NESDA or ISCET member, or a previous purchaser.

❑ Payment enclosed **OR**

❑ Charge my: ❑ Visa; ❑ Mastercard

Card # _____

Signature _____

Name _____

Company _____

Phone _____

Address _____

City/State/Zip _____

Rights and Responsibilities Under Federal Law

People who have employees that are in the National Guard or who are Reservists have special rights and responsibilities under Federal law. Here are some guidelines to help Employers and Employees understand the law.

In the wake of the sad events of September 11, our nation's full-time military has been put on alert, and National Guard and Reserve forces are being called to active duty. More than half of the Americans in uniform are members of the National Guard or Reserve, citizen-volunteers whose military duty is a demanding commitment in addition to civilian career and family responsibilities.

A significant amount of resources are saved during peacetime when they are not needed full-time, yet they are available on short notice to help protect the homeland.

Despite these benefits to our country, most employers worry about what would happen if their workforce was affected by a Reservist who was called to serve, vacating his regular position. Small businesses especially worry about such matters, because losing even one employee forces the remainder to "take up the slack." Is there anything an employer can do if he finds himself in this situation?

Yes ... and no. Employers don't have a lot of choice about letting these employees go when they are called, whether to train or to active service, but it should be a privilege and an act of American patriotism to support them in their efforts while they are defending what we hold dear.

NESDA member and veteran Bill Abernathy of Fort Worth, TX, is a volunteer ombudsman with the National Committee for Employer Support of the Guard and Reserve, and one of over 40,000 volunteer ombudsmen currently spending most of his free time providing information to reservists in units that have recently been activated. Abernathy says reservists are concerned about the impact their absence will have, and are advised to give their employers as much notice as possible. They don't relish the idea of being gone from their jobs or their families, but they understand that they wouldn't be called if they were not needed.

Employers must comply with a Federal law, the Uniformed Services Employment and Reemployment Rights Acts (USERRA), enacted October 1994 and significantly updated October 1996 and 1998. The law provides protection and rights of reinstatement to employees who participate in the National Guard and Reserve. The law spells out specific rights and responsibilities about which all employers of National Guard and Reserve members should be aware.

"Our nation's military has been put on alert."

Here are some general provisions of the law that apply to employee reservists:

- National Guard and Reserve members are entitled to a leave of absence from their civilian employers for the period necessary to perform military service, whether that service is voluntary or involuntary, for up to five years of cumulative service. The 5-year total does not include: inactive duty training (drills), annual training, involuntary recall to active duty, or additional training requirements determined and certified in writing by the Service Secretary, and considered to be necessary for professional development or for completion of skill training or retraining. For periods of service of up to 30 days, employers must provide continued company benefits including medical, retirement, insurance plans, and profit sharing. They may not be required to use their earned personal vacation during the period of service.

- Employees are entitled to restoration in employment following military service, with seniority, status, and rate of pay as if continuously employed.

- Persons may not be discriminated against in hiring, retention in employment, promotions, or other benefits of employment because of past or present military affiliation or obligations, or because of an intent to join the military, whether it be Active, Reserve, or National Guard.

Employers also have rights under the same law. These include:

- Except in vary rare situations, National Guard members and Reservists (or their military commands) must provide advance notice of upcoming military duty to their employers for any type of military service. The Department of Defense strongly urges Reserve employees to give their employers this notice as far in advance as possible.

- An employer has the right to proof of an employee's military duty. In case of periods of military absence of longer than 30 days, an employer is entitled to documentation that establishes the eligibility of the individual for re-employment.

An employer does not have to pay a Reservist while he/she is gone, although some organizations do. A Reservist is also not required to find a substitute to work in his place, only to notify his employer.

Can an employer ask an employee to reschedule drills, annual training, or other military duty? When military duties would require an employee to be absent from work for an extended period, during times of acute need, or when (in light of previous leaves) the

(NESDA Forum, continued)

(NESDA Forum, continued)

requested military leave is cumulatively burdensome, the employer may contact the military commander of the employee's military unit to determine if the duty could be rescheduled or performed by another member. If the military commander determines that the military duty cannot be rescheduled or canceled, the employer is required to permit the employee to perform his or her military duty.

Other than allowing employees to serve when necessary, what can employers do to support the Reserves?

- Research conducted for the Department of Defense indicates that a significant number of National Guard members and Reservists who turn down re-enlistment do so because of conflicts between their civilian jobs and military commitments. Lack of knowledge about Reserve military service, and disinterest and resentment on the part of employers contribute to erosion of the Reserve Forces' personnel strength. Show support for your employees and their military obligations, and formulate personnel policies that ensure employees that they do not have to worry about their jobs during times when they have military obligations.

- Publicize your support through personal contact, internal correspondence and employee news publications.

- Sign and display a Department of Defense Statement of Support for the Guard and Reserve, a handsome, official certificate that proclaims your membership on the National Guard-Reserve-Employer team.

As with anything governed by Federal law, there are numerous exceptions and specifics that govern the application of the law under these special circumstances, many more than can be presented here in general form.

If you'd like to request one of these certificates to display at your place of business, or have questions about any of the laws relating to Reservists, visit www.esgr.com and click on "Statement of Support" to complete the online form. The ESGR website has a lot of good, pertinent information and is worth a visit to read up on it. You can also phone the National Committee for Employer Support of the Guard and Reserve at 800/336-4590 to request the form, or get more information on the laws pertaining to Reserve duty. Hours of operation are Monday through Friday 8 a.m. to 5 p.m., Eastern time.§

---

register online at www.nesda.com

or call 817-921-9061 ext.16 for a registration form

NPSC 2002

2002 National Professional Service Convention and Professional Service Trade Show

The Rosen Centre Hotel
Orlando, Florida
July 31 to August 3, 2002
July 30 — Welcoming Reception

Above Photos Courtesy Orlando/Orange County Convention & Visitors Bureau, Inc.

2001 ARTICLE INDEX
ES&T Quick Guide to Articles Appearing in Year 2001

Article/Author	Date	Page
HISTORY		
A History of Electronic Projection Display Technology (Part 1) ES&T Staff	1/01	6
A History of Electronic Projection Display Technology (Part 2) ES&T Staff	4/01	22
A History of Electronic Display Technology (Part 3) Light Value Technology from Pixelated Light Values to Piezoelectric Mirror Light Values	7/01	23
A History of Electronic Display Technology (Part 4) Light Valve Technology from Pixelated Light Valves to Piezoelectric Mirror Light Valves	10/01	22
SERVICING/MAINTENANCE		
Understanding and Servicing Playstations Oscar Sugnitan	1/01	14
DVD Servicing ES&T Staff	1/01	38
Phone Systems ES&T Staff	2/01	16
Scanners ES&T Staff	2/01	40
High Definition TV: Are You Sick Of It Yet? Alvie Rodgers — Hitachi	3/01	7
Printer Servicing ES&T Staff	3/01	12
Circuit Board Rework Solutions Jerry Howard	3/01	23
Gemstar, Histogram, Comb Filters, And More Steven J. Babbert	3/01	38
VCR Servicing: More About TV/VCR Combination Units Bob Rose	3/01	42
Servicing Tips / Aids Reference ES&T Staff	3/01	49
Rewritable Disk Systems DVD Video Player Circuits John A. Ross	4/01	7
Closed Circuit TV ES&T Staff	4/01	14
Set Top Boxes for HDTV ES&T Staff	4/01	16
Audio/Sound Installation and Maintenance Bob Rose	5-6/01	10
Camcorders ES&T Staff	5-6/01	24
Network Server Technologies John Ross	7/01	13
Global Positioning Systems ES&T Staff	7/01	18
Microwave Ovens Samuel Goldwasser	7/01	38
Digital Television Update: DVB John A. Ross	8/01	8
A Look at HDTV A Precursor: The Thomson MM101 Bob Rose	9/01	8
Telecommunications Testing Jim Hayes & Fotec Staff	9/01	23
Servicing New Generation Televisions Bob Rose	10/01	8
SOURCES/GUIDES/TIPS		
Replacement Parts/Servicing Sourceguide ES&T Staff	1/01	24
Replacement Parts Directory — Addendum ES&T Staff	3/01	50
15th Annual Buyers' Guide & Web Directory ES&T Staff	5-6/01	26
TOOLS/EQUIPMENT		
Materials Handling — Components to Equipment ES&T Staff	1/01	42
Tools and Toolcase Showcase — An Advertising Section ES&T Staff	3/01	15
CONVENTIONS/MEETINGS		
Consumer Electronics Show ES&T Staff	1/01	19
National All Service Convention ES&T Staff	1/01	20
Comdex Preview / NASC Review ES&T Staff	3/01	47
Electronic Distribution Show and Conference ES&T Staff	4/01	38
CEDIA EXPO 2001	8/01	43
CEDIA Expo 2001 Wrap Up ES&T Staff	9/01	21
2001 Best Ideas Contest from NPSC ES&T Staff	10/01	42
COMDEX Review ES&T Staff	10/01	44
INSTRUMENTATION/TEST EQUIPMENT		
The Capanalyzer Bob Rose	1/01	21
Test Equipment Update Alvin G. Sydnor	3/01	18
Oscilloscope Update: Making Differential Measurements Dr. Arnold Banks	7/01	8
Multimeter Update ES&T Staff	8/01	37
MANAGEMENT		
Service Center Management Trends ES&T Staff	2/01	8
Service Center Management Software	2/01	12
The Cost of Service Today ES&T Staff	5-6/01	8
Complying With Environmental Considerations ES&T Staff	8/01	40
TROUBLESHOOTING		
Troubleshooting and Repairing a Philips-Funai TV-VCR "COMBIS" Bob Rose	2/01	21
Troubleshooting Vertical Problems in the RCA CTC 177 Homer Davidson	2/01	34
Computer Monitoring Troubleshooting & Repair Adapted from Sams Book	5-6/01	16
Good Grief! It's In Shutdown Bob Rose	8/01	18
PC Testing Tips PC911	10/01	13
PARTS/SUPPLIES		
Product File: Capacitors ES&T Staff	2/01	38
Distribution Showcase An Advertising Section	4/01	18
Replacement Parts Showcase ES&T Staff	8/01	33
Soldering and Desoldering — Back to the Basics The ES&T Staff	8/01	45
Audio Transformers Rick Waller	9/01	41
HOME THEATRE		
Designing Your Showcase ES&T Staff	4/01	39
The Home Theater: Lighting ES&T Staff	8/01	14
Home Theater Opportunities — Bootcamp from NPSC Brian Gibson & Fred Paradis, Elite Media	9/01	13
Home Theatre Showcase An Advertising Section	9/01	17
Servicing New Generation Televisions Bob Rose	10/01	8

COMPLETE YOUR COLLECTION TODAY.

To Order Back Issues

ONLY $5.00 PER ISSUE

Check, Money Order, Mastercard, VISA, Discover and AMEX accepted

Electronic Servicing & Technology

BACK ISSUES

P.O. Box 748, Port Washington, NY 10050

CALL: 800-462-4659

For Fastest Service

FAX 516-883-2162

PROFAX 10-YEAR DIRECTORY JANUARY 1991 — DECEMBER 2001

JANUARY 1991
RCA CTC91 chassis color TV 3072

FEBRUARY 1991
RCA CTC107 chassis color TV 3073

MARCH 1991
RCA/GE CTC168 chassis color TV 3074

APRIL 1991
RCA/GE CTC86 chassis color TV 3075

MAY 1991
RCA/GE KCS5203 chassis B&W 'TV 3076

JUNE 1991
RCA CTC96 chassis color TV 3077

JULY 1991
RCA CTC 107 chassis color TV 3078

AUGUST 1991
Hitachi CT1947/CT19A7 chassis color TV 3079

SEPTEMBER 1991
Hitachi CT2541/2542 chassis color TV 3080

OCTOBER 1991
RCA/GE CTC167 chassis color TV 3081

NOVEMBER 1991
RCA/GE CTC166 chassis color TV 3082

DECEMBER 1991
RCA/GE CTC169 chassis color TV 3083

JANUARY 1992
RCA/GE CTCI68 chassis color TV 3084

FEBRUARY 1992
Hitachi AP13 color TV 3085

MARCH 1992
Hitachi VT-M40A color TV 3086

APRIL 1992
Hitachi 3267E VCR 3087

MAY 1992
RCA/GE CTC 168-53 color TV 3088

JUNE 1992
Hitachi VT-M231A VCR 3089

JULY 1992
Hitachi VT-F551A VCR 3090

AUGUST 1992
RCA/GE color TV No 7-7800A 3091

SEPTEMBER 1992
RCA/GE TX82 color TV 3092

OCTOBER 1992
Sharp Model 13C-MI00 color TV 3093

NOVEMBER 1992
Sharp Model 27C-5200 color TV 3094

DECEMBER 1992
Hitachi VT MI50A VCR 3095

1992/1993 PROFAX SCHEMATICS SPECIAL ISSUE:
Curtis Mathes Projection TV: Models SMP 4100, 4600, 5210
Hitachi Camcorder Model UM-E2A
Memorex Pocketvision 26, Catalog Number 16-163
Mitsubishi VCR Model HS-U55
Panasonic color TV Model SR400EK
RCA/GE VCR Model VG4202
Sharp color TV Model 27SV65
Toshiba color TV Model CF2077A: CX21772
Zenith color TV: Models SD5515/SD5535/SD555G

JANUARY 1993
Sharp Model 20C-5300 color TV 3096

FEBRUARY 1993
Sharp chassis No. 25S1 color TV 3097
Sharp VCR Model VCA45U 3098

MARCH 1993
Sharp Model 20C-5200 3099
Sharp VCR Model VC-H86U/C 3100

APRIL 1993
Sharp Model 27SV70 3101

MAY 1993
Sharp VCR Model VC-H870U/C, VC-8870U/C 3102
Sharp Model 20SB65 color TV 3103

JUNE 1993
Sharp VCR Model VC-A503U, VC-A504U/C 3104

JULY 1993
Sharp VCR Model VC-H903U/C, VC-H904U/C 3105

AUGUST 1993
Sharp VCR Model VC-H87U/C 3106

SEPTEMBER 1993
Sharp Models 19E-M40R, 19-EM50R color TV 3107

OCTOBER 1993
RCA color TV Model CTC176 3108

NOVEMBER 1993
Hitachi Proj. color TV Models 55EX7K, 5OEX6K, 46EX3B/4K, 50ESI B/K, 46EX3BS/4KS 3109

DECEMBER 1993
Sharp color TV Model 19E-M50 3110

1993/1994 PROFAX SCHEMATICS SPECIAL ISSUES:
Curtis Mathes VCR/Model GV730/740
Hitachi TV/Model NP 83LX
IBM Monochrome Display/Model 8503
Magnavox TV/Model RD0945C101, RD0946T101
Memorex Portable Compact Disc Player/Model CD-3360
Memorex VCR/Model 29
Mitsubishi TV/Model CS-3535R/CK-3536R, CS3135R/CK-3136R
Panasonic CTM 1353R
JC Penney TV/Model 2003
Sharp color TV/Sigma 9700 chassis
Thomson Consumer Electronics color TV/RCA CTC 175
Toshiba VCR/Model M222, M222C, M227C, M227L

JANUARY 1994
Memorex Portavision 9-inch color VHF/UHF TV monitor 3111

FEBRUARY 1994
Hitachi VHS VCR Models VT-P350A, VT-F351A, AW 3112

MARCH 1994
Sharp color TV Model 205B55m chassis No 20R1 3113

APRIL 1994
GE VCR Models 9-7100, 9-7115, 9-7120, 9-7215 3114

MAY 1994
Hitachi VCR Model VM-2400A (U,PX), AW 3115

JUNE 1994
Thomson Consumer Electronics color TV: TX825 3116

JULY 1994
Sharp CTV Models 13F-M40, 13F-M50, 13F-M100, 13F-M150 3117

AUGUST 1994
Hitachi Video camera/recorder Models VM-2700A, VM-3700A (U,C) 3118

SEPTEMBER 1994
Sharp CTV Models 25F-M40/50/100/120, chassis No SN 41 3119

OCTOBER 1994
Hitachi VCR Model VM-1700A (U,C) 3120

NOVEMBER 1994
Hitachi VCR Models VT-F380Z/F38 IA, VT-F382A/F385A 3121

DECEMBER 1994
Thomson Consumer Electronics color TV: TX825 3122

1994/1995 PROFAX SCHEMATICS SPECIAL ISSUE:
Hitachi VCR Model VM-1600A
Memorex VCR catalog no. 16-620
Panasonic VCR Models PV-4962, PV4941-K, PV-4960-K
JC Penney TV/VCR Model 2163
Quasar Model CTM-1355R & TP-1330EE
RCA color TV Model CTC 168-S4
Sharp color TV models 20C-S100 & 20C-S120
Tatung color monitor
Toshiba VCR Model SV-F990
Zenith color TV receiver CM-139/B-1
Zenith CM-I43IDigital (A)

JANUARY 1995
Sharp video cassette recorder Models VC-A502U, VC-A506U, VC-A507U 3123

FEBRUARY 1995
Sharp color TV Model 19TF30, chassis SN40A 3124

MARCH 1995
Hitachi video cassette recorder Model VT-F482A 3125

APRIL 1995
RCA video cassette recorder Model VR530 3126

MAY 1995
RCA video cassette recorder Model VR530 (cont'd) 3126

JUNE 1995
Hitachi projection televisions Models 50UX 18B/19K, 46UX 16B/17K 3127

JULY 1995
JC Penney combinations Model 2163 3128

AUGUST 1995
Sharp video cassette recorder Model VC-H925U/H927U 3129

SEPTEMBER 1995
Thomson Consumer Electronics color TV Model CTCI87 3130

OCTOBER 1995
Sharp TV/VCR combo Model 1 3VT-F40/13VT-F100 3131

NOVEMBER 1995
Thomson Consumer Electronics VCR Model VG2030 3132

DECEMBER 1995
JC Penney color television Model 1048/1049 3133

1995/1996 PROFAX SCHEMATICS SPECIAL ISSUE:
Panasonic TV Model CTM-2092S Chassis ALEDP203
JC Penney TV Model 2157
JC Penney TV Model 2294
Sharp TV/VCR Combinations Models 20VT-G60, 20VT-G100, 20VT-G200
Sharp VCR Model VC-H946U, VC-H948U
Thomson VCR Model VR516
Thomson color video camcorder Models CC525, CPS014, CPS0I5
Thomson TV, AM radio cassette combinations Model 7-7800A
Toshiba TV Model CF2771A
Zenith projection TV L-Line C-8 Chassis
Zenith color TV receiver Models SD250IW, SD2509H

JANUARY 1996
Zenith wall projector Model PV-144 3134

FEBRUARY 1996
Hitachi VCR Model VT-Ux605A 3135

MARCH 1996
Zenith digital direct view Model CM-142 3136

APRIL 1996
Thomson Consumer Electronics VCR Model VR321 3137

MAY 1996
Sharp color television Models 25E-M100 & 25E-M120 3138

JUNE 1996
Sharp TV/VCR combination Model 27VS-G300 3139

JULY 1996
JC Penney color TV receiver Model 2307 3140

AUGUST 1996
Zenith color TV receiver Model CM-142/C-1 3141

PROFAX 10-YEAR DIRECTORY JANUARY 1991 — DECEMBER 2001

SEPTEMBER 1996
Sharp VCR Models VC-A555, 556
VC-H955, 956, 958U 3142

OCTOBER 1996
Thomson Consumer Electronics Color TV
Model CTC177 3143

NOVEMBER 1996
RCA/GE VCR Model VR520/523 3144

DECEMBER 1996
Memorex moviecorder Model 127 3145

1996/1997 PROFAX SCHEMATICS SPECIAL ISSUE:
Hitachi video camera Model VM-E25A (U,C)
Panasonic VCR Model PV-4066
JC Penney color TV receiver Model 2158
JC Penney color TV receiver Model 2509
Sharp TV/VCR combination Model 20C-V300
Thomson Consumer Electronics projection TV
Model PTK 171
Toshiba color TV Models 6F35661, CX37662
Zenith digital color TV Receiver J-Line Model PV-143
Zenith color TV Model S1322S, SMS 1324SS/X, SMS1325S

JANUARY 1997
Hitachi Color TV Models 35UX80B/CZ58,
35UX70B/CZ57 3146

FEBRUARY 1997
Thomson video cassette recorder Model PTK171 3147

MARCH 1997
Thomson video cassette recorder Model PTK 171
(cont'd) 3147

APRIL 1997
Sharp color TV Models 27H-S200, CH27S20 3148

MAY 1997
Hitachi video cassette recorder Model
VT-F390A/F391A 3149

JUNE 1997
Sharp color television Model 25H-MI00 3150

JULY 1997
Thomson Consumer Electronics video
cassette recorder Model VR71HF 3151

AUGUST 1997
Sharp TV/VCR combination Model 20VT-H60,
20VT-H200, 20VT-CR6 3152

SEPTEMBER 1997
Thomson Consumer Electronics color video
camcorder Model CC710 3153

OCTOBER 1997
Toshiba video cassette recorder Model M-651/651C 3154

NOVEMBER 1997
Thomson Consumer Electronics color TV
Model CTC 170 3155

DECEMBER 1997
Sharp video cassette recorder Model
VC-A25U, CA55U, C 3156

JANUARY 1998
Thomson Consumer Electronics video cassette
recorder Model VR800HF 3157

FEBRUARY 1998
Zenith rear projection color TV receiver
Model PV-145/C8 (A) 3158

MARCH 1998
Thomson Consumer Electronics color video
camcorder Model CC390 3159

APRIL 1998
Sharp video cassette recorder Model
VC-A70U, VC-HI00U 3160

MAY 1998
Sharp color TV Model 13H-M60/100/150,
CH13M6/10/15 3161

JUNE 1998
Sharp color TV Model 19H-M60/
100/150, CHI6M6 3162

JULY 1998
Sharp video cassette recorder VC-A575U, A578U,
H973U, R974U, H975U, R976U, H978U 3163

AUGUST 1998
Sharp TV/VCR combination
25VT-H200, 25V5-H300 3164

SEPTEMBER 1998
Sharp video cassette recorder Model VC-A523U 3165

OCTOBER 1998
RCA color TV Model CTC172 3166

NOVEMBER 1998
Thompson RCA/GE Color video
camcorder Model CC415 3167

DECEMBER 1998
Sharp video cassette recorder Models
VC-H902U, VC-R906U, VC-R907U 3168

JANUARY 1999
Hitachi color television CT2550/CT2551/CT2552/
CT2555/CT2556 3169

FEBRUARY 1999
JC Penney 5.5 inch color TV receiver with
AM/FM radio, Model No.685-2189 3170

MARCH 1999
Sharp color television Model 19TG30 3171

APRIL 1999
Hitachi color television Model CTI9CS/CT1966 3172

MAY 1999
Hitachi color television Model CMT2138 3173

JUNE 1999
Hitachi color television Model CMT2138 3174

JULY 1999
Zenith color TV receiver, Models SD2593W, SD2593Y,
SD5539W, SD5557Y, 5D5729W, 5D5779H 3175

AUGUST 1999
Zenith color TV receiver Model CM-144/C3 3176

SEPTEMBER 1999
Zenith color TV receiver Model SD1995W/
SD3923W/SD3961Y/5D3961YH 3177

OCTOBER 1999
RCA/GE video cassette recorder Model VG7685 3178

NOVEMBER 1999
RCA/GE video cassette recorder Model VG7620 3179

DECEMBER 1999
Hitachi solid state color TV Model CT7970B/K 3180

JANUARY 2000
RCA/GE Color Television
Models CTC158/159 3181

FEBRUARY 2000
RCA/GE Color Video Camcorder Model CC320 3182

MARCH 2000
RCA/GE Video Cassette Recorder Model VG7620 3183

APRIL 2000
Sharp TV/VCR Combination Models
25VT-G60/G80/G100 3184

MAY
RCA/GE Color Video Camcorder Model CC260/280 3185

JUNE 2000
RCA/GE Video Cassette Recorder
Models VG7610/7910 3186

JULY 2000
Sharp Video Cassette Recorder
Models 25VT-G60/80/100 3187

AUGUST 2000
Hitachi TV/VCR combination
Television Models 13VR3B/20VR4B 3188

SEPTEMBER 2000
RCA Color Television
CTC203 3189

OCTOBER 2000
Hitachi Projection Color Television
Models CLU-612MP/CLU-617MP 3190

NOVEMBER 2000
Hitachi 8mm video camera/recorder
Models VM-H765LA/H665LA, VM-E565LA/E563LA 3191

DECEMBER 2000
Hitachi Color Television 3192

JANUARY 2001
Hitachi 8mm video camera/recorder
Models VM-E555LA/H755LA VM-H855LA/H955LA 3193

FEBRUARY 2001
Hitachi 8mm video camera/recorder
Models VM-E555LA/H755LA VM-H855LA/H955LA 3194

MARCH 2001
Hitachi Projection Color TV
Model 50SBX78B/60SBX78B 3195

APRIL 2001
Hitachi Projection Color TV
Model 50SBX78B/60SBX78B 3196

MAY/JUNE 2001
Toshiba 3LCD Data Projector
Model TLPB2U/TLPB2E/TXPB2/TLPB2C
RCA Camcorder CC9370 3197/3198

JULY 2001
Magnavox Television
Model 25TR12C221 (Chassis 25X601-00AA) 3199

AUGUST 2001
Samsung Television
Model TXE2545/TXE2546 (Chassis KCT52A) 3200

SEPTEMBER 2001
Zenith Television
Model SY3272DT 3201

OCTOBER 2001
Zenith Television
Model C25A24T/CB27A25Z 3202

COMPANY INDEX – 2001

	Profax#	Month/Year
CURTIS MATHES		
Models SMP 4100, 4600, 5210 Projection TV Set	Special	1992/93
Model GV 730/740 VCR	Special	1993/94
GENERAL ELECTRIC		
Models 9-7100, 9-7115, 9-7120, 9-7215 SVCR	3114	Apr 94
HITACHI		
CT1947/CTI9A7 chassis color TV	3079	Aug 91
CT2541/2542 chassis color TV	3080	Sep91
Chassis API3 color TV	3085	Feb 92
Model 3267B VCR	3087	Apr 92
Model VT-F55IA VCR	3090	Jul 92
Model VT-M40A VCR	3086	Mar 92
Model VT150A VCR	3095	Dec 92
Model VT-M231A VCR Model UM-E2A Camcorder	Special	1992/93
Models 55EX7K, 50EX6K, Projection color TV	3109	Nov 93
46EX3B/4K, 50ES IB/K, 46EX3B5/4KS NP 83LX color TV	Special	1993/94
VCR Model VT-F350A, VT-F35IA, AW	3112	Feb 94
Model 35UX80B/CZS8 35UX70B/CZ57 color TV	3146	Jan 97
Model VT-F390A/F391A VCR	3149	May 97

Model VM-2400A (U,PX), AW VCR	3115	May 94
Model VM-1700A (U,C) VCR	3120	Oct 94
Models VT-F380Z/F38IA, VT-F382A/F385A VCR	3121	Nov 94
Models. VM-2700A, VM-3700A (U,C) Vid. cam/rec.	3118	Aug 94
Model VM- 1600A VCR	Special	1994/95
Model VT-F482A VCR	3125	Mar 95
Models S0UX 18B/19K projection television	3127	Jun 95
46UX 16B/17K		
Model VT-UX605A VCR	3135	Feb96
Model VM-E25A video camera	Special	1996/97
Models CT2550/CT2551/CT2552/ CT2555/CT2556 color television	3169	Jan 99
Model CT19C5/CT1966 color TV	3172	Apr 99
Model CMT2138 color TV	3173	May 99
Model 4146 color TV receiver	3174	Jun 99
Model CT7970B/K solid state color television	3180	Dec 99
TV VCR Combination TV Models 13VR3B/20VR4B	3188	Aug 00
Projection Color TV Models CLU-612MP/CLU-617MP	3190	Oct 00
8mm video camera recorder Models VM-H765LA/H665LA, VM-E565LA/E563LA	3191	Nov 00
Model VM-E555LA/H755LA VM-H855LA/H955LA		
AC Adapter VM-ACE5A 8mm video camera/recorder	3193/94	Jan/Feb 01
Model 50SBX78B/60SBX78B projection color TV	3195/96	Mar/Apr 01

IBM

Model 8503 Monochrome Display	Special	1993/94

JC PENNEY

Model 2003 color TV	Special	1993/94
Model 2163 TV/VCR	Special	1994/95
Model 2163 combination	3128	Jul 95
Model 1048/1049 color TV	3133	Dec 95
Model 2157 TV	Special	1995/96
Model 2294 TV	Special	1995/96
Model 2307 color TV	3140	Jul 96
Model 2158 color TV	Special	1996/97
Model 2509 color TV	Special	1996/97
Model 685-2189 5.5 inch color television receiver with AM/FM radio	3170	Feb 99

MAGNAVOX

Model RD0945C101, RD0946T101 color TV	Special	1993/94
Model 25TR12C221 (Chassis 25X601-00AA)	3199	July 01

MEMOREX

Catalog Number 16-163 Pocketvision 26 TV	Special	1992/93
Model CD-3360 Portable CD Player	Special	1992/93
Model 29 VCR	Special	1992/93
Portavision 9-inch color VHF/UHF TV Monitor	3111	Jan 94
catalog no.16-620 VCR	Special	1994/95
Model 127 Moviecorder	3145	Dec 96

MITSUBISHI

Model CS-3535R/CK-3535R C53 135R/CK3136R color TV	Special	1992/93
Model HS-USS VCR	Special	1992/93

NAP

(Magnavox RD8518 and RD8520; Philco Model P8190S; Sylvania PSC410 and PSC420)

PANASONIC

Model SR400EK color TV	Special	1992/93
Model CTM1353R color TV	Special	1993/94
Models PV-4962, PV4941 -K PV4960-K VCR	Special	1994/95
Model CTM-2092S Chassis ALEDP203	Special	1995/96
VCR Model PV-4066	Special	1996/97

RCA

CTC99 chassis color TV	3072	Jan 91
CTC107 chassis color TV	3073	Feb 91
CTC96 chassis color TV	3077	Jun 91
CTC107 chassis color TV	3078	Jul 91
CTC176 chassis color TV	3108	Oct 93
CTC175 chassis color TV	Special	1993/94
Model CTC 168-S4 color TV	Special	1994/95
Model VR530 VCR	3126	Apr/May 95
CTC203 chassis color TV	3189	Sep 00

RCA/GE (THOMSON CONSUMER ELECTRONICS)

CTCI68 chassis color TV	3074	Mar91
CTC86 chassis color TV	3075	Apr91
KCS203 chassis B&W TV	3076	May 91
CTCI67 chassis color TV	3081	Oct91
CTC166 chassis color TV	3082	Nov91
CTCI69 chassis color TV	3083	Dec 91
CTCI68 chassis color TV	3084	Jan 92
CTC168-53 chassis color TV	3088	May 92
Model 7-7800A color TV	3091	Aug 92
TX82 chassis color TV	3092	Sep 92
Model VG4202 VCR	Special	1992/93
TX825 colorTV	3116	Jun94
TX825 color TV	3122	Dec 94
Model VR516 VCR	Special	1995/96
Models CC525, CPS014, CPS015 color camcorder	Special	1 995/96
TV AM radio cassette combination Model 7-7800A	Special	1995/96
Model CTCI87 color TV	3130	Sep 95
Model VG2030 VCR	3132	Nov 95
Model VR321 VCR	3137	Apr 96
CTCI77 color TV	3143	Oct 96
Model VR520/523 VCR	3144	Nov 96
Model PTK171 projection TV	Special	1996/97
Model PTKI7I VCR	3147	Feb/Mar 97
Model VR7IHF VCR	3150	Jul 97
Model CC710 color camcorder	3153	Sep 97
Model CTCI70 color TV	3155	Nov 97
Model VR800HF VCR	3157	Jan 98
Model CC390 color video camcorder	3159	Mar 98
Model CTCI72	3166	Oct 98
Model CC415 color video camcorder	3167	Nov 98
Model VG7685 VCR	3178	Oct 99
Model VG7620 VCR	3179	Nov 99
Models CTC158/159 color TV	3181	Jan 00
Model CC320 color video camcorder	3182	Feb 00
Model VG7620 video cassette recorder	3183	Mar 00
Models CC260/280 color video camcorder	3185	May 00
Models VG7610/7910, video cassette recorder	3186	June 00
Model CC9370 camcorder	3198	May/June 01

SAMSUNG

Model TXE2545/TXE2546 TV chassis KCT52A	3200	Aug 01

SHARP

Model 13C-M100 color TV	3093	Oct 92
Model 27C-5200 color TV	3094	Nov 92
Model 27SV65 color TV	Special	1992/9?
Model 19E-M50	3110	Dec 93
Model 19E-M40R, 19E-M50R color TV	3107	Sep 93
Model 20C-5300 color TV	3096	Jan 93
Model 20C-5200 color TV	3099	Mar.93
Model 20SB65 color TV	3103	May 93
25S1 chassis color TV	3097	Feb 93
Model 27SV70	3101	Apr 93
Sigma 9700 chassis color TV	Special	1993/9~
Model VC-A45U VCR	3098	Feb 93
Model VC-A504U/C VCR	3104	Jun 93
Model VC-H86U/C VCR	3100	Mar 93
Model VC-H87U/C VCR	3106	Aug 93
Model VC-R870U/C, VC-8870U/C VCR	3102	May 93
Model VC-H903U/C, VC-H904U/C VCR	3105	Jul 93
Model 20SB55, chassis No. 20R1 VCR	3113	Mar 94
Models 13F-M40, 13F-MI50, 13F-M100,13F-MI50	3117	Jul 94
Models 25F-M40/50/I00/120, chassis No SN 41	3119	Sep94
Models 20C-S100, 20C-S120 color TV	Special	1991/95
Models VC-A502U, VC-AS06U, VC-A507U VCR	3123	Jan 95
Model 19TF30, Chassis SN40A color TV	3124	Feb 95
Model VC-H925U/H927U VCR	3129	Aug 95
Model 13VT-F40/I3VT-F100 Models 20VT-G60, 20VT-G100 TV/VCR combination	3131	Sep 95
20VT-G200, Chassis VN-51 TV/VCR combination	Special	1995/96
Model VC-H946U, VC-H948U VCR	Special	1995/96
Model 25E-M100, 25E-M120 color TV3163	3138	May 96
Model 27VS-G300 TV/VCR combination	3139	June 96
Models VC-A555, 556, VC-R955, 956, 958U VCR	3142	Sep 96
Model 20C-V300 TV/VCR combination	Special	1996/97
Models 27H-S200 CH27520 color TV	3148	Apr 97
Model 25H-M100 color TV	3149	Jun 97
Models 20VT-H60, 20VT-H200 20VT-CR6 TV/VCR combination	3151	Aug 97
Models VC-A25U,C A55U, C VCR	3156	Dec 97
Model VC-A70U, VCH100U VCR	3160	Apr 98
Model 13H-M60/100/150, CR13M6/ 10/15 color TV	3161	May 98
Model 19H-M60/100/150 CH19M6 color TV	3162	Jun 98
Model VC-A575U, A578U, R973U H974U, H975U, H976U, H978U	3163	Jul 98
VCR Model 25VT-H200, 25-VS-H300 TV/VCR combination	3164	Aug 98
Model VC-A523U VCR	3165	Sep 97
Model VC-H902U, VC-H906U, VC-H907U VCR	3168	Dec 98
Model 19TG30 color television	3171	Mar 99
Models 25VT-G60/G80/G100 TV/VCR combination	3184	Apr 00
Models 25VT-G60/80/100 video cassette recorder	3187	July 00

TATUNG

color monitor	Special	1994/95

TOSHIBA

Model CF2077A: CX21772 color TV	Special	1992/93
Model M222, M222C, M227C, M227L VCR	Special	1993/94
Model SC-F990 VCR	Special	1994/95
Model CF277IA TV	Special	1995/96
Models 6F35661, CX37662 color TV	Special	1996/97
Model M-651/651C VCR	3154	Oct97
Model TLPB2U/TLPB2E/TXPB2/ TLPB2C 3LCD data projector	3197	May 01

ZENITH

(Models SE3135P/SE3191H/SE3535H/ ZB2771H/ZB2771H2/ZB2777H/ ZB2777H2/ZB2797P/ZB2797P2/ZB2797Y/ ZB2797Y2/ZB3193H/ ZB3193Y/ZB3539T/ZB3539Y)		
CM-I 39/B2 Models SD5515, SD5535, SD5556	Special	1992/93
Model CM-139/B-I color TV	Special	1994/95
CMI43/digital (A)	Special	1994/95
L-line C-8 Chassis TV	Special	1995/96
Model SD2501W, SD2509H color TV	Special	1995/96
Model PV-144 wall projector	3134	Jan 96
Model CM-142 digital direct view	3136	Mar 96
Model CM 142/C-1 color TV	3141	Aug 96
J-Line Model PV- 143 digital color TV	Special	1996/97
Models S1322S, SMS13245/X, SMS 1325S color TV	Special	1996/97
Model PV-145/C8 (A) rear projection color TV receiver	3158	Feb 98
Models SD 2593W, SD2593Y, 5D5539W, 5D5557Y, 5D5729W, 5D5779H	3175	July 99
Model CM-144/C-3 color TV receiver	3176	Aug 99
Models SD 1995W/5D3923W/5D396IY/ SD3961YH color TV receiver	3177	Sep 99
Model SY3272DT color TV	3201	Sep 01

Photofact® Index

SAMS TECHNICAL PUBLISHING HAS JUST RELEASED THE FOLLOWING PHOTOFACT® SETS

JVC
AV-36D202/H 4556
AV-36D202/R 4556
AV-36D202/Y 4556
AV-36D302/H 4556
AV-36D302/R 4556
AV-36D302/Y 4556
AV-36D502/H 4556
AV-36D502/R 4556
AV-36D502/Y 4556
AV-27260/R.....4560
AV-27260/S.....4560
AV-27260/Z 4560

PANASONIC
AP341.....4554
BP341.....4554
CT-32D20B 4554
CT-32D20UB.....4554
CT-32D30B 4554
CT-32D30CB 4554
CT-32D30UB.....4554
CT-36D11CE.....4559
CT-36D11E 4559
CT-36D11UE.....4559
GP342 4559

PROSCAN
CTC169EJ5.....4553
CTC179BJ2.....4561
CTC179CI2 4561
CTC179CJ2.....4561
PS27160FE4 4561
PS27160JX4 4561
PS31122FX1 4553
PS31122JX1 4553
PS32130AFM4 4561
PS32130AJX4 4561
PS35122FX1 4553
PS35122JX1 4553
PS35622LW1 4553
PS36127FM4 4561
PS36127JX4 4561
PS36130FM4 4561

QUASAR
EC363 4564
SP-2724E.....4564
SP-2724UE 4564

RCA
P46921YX6 .....PF GOLD 9
P46922YX6 .....PF GOLD 9
P46924YX6 .....PF GOLD 9
P52927YX3 .....PF GOLD 9
P56927YX3 .....PF GOLD 9
P61927YX3 .....PF GOLD 9
PTK195M11A ...PF GOLD 9
PTK195M11B ...PF GOLD 9
PTK195M11P ...PF GOLD 9
PTK195M11T....PF GOLD 9

SAMSUNG
TXK2766 4562
TXK2766X/XAA.....4562
TXK2767X/XAA.....4562
TXK2767X/XAC.....4562

SANSUI
TVS2540G Version A....4555

SHARP
25R-S100 4558
25R-S100T 4558
32R-S50 4563
36R-S50 4563

TOSHIBA
27A41 4557

Photofact® and Photofact® Gold are available from NESDA Corporate Members: B&D Enterprises, HBF Electronics, MCM Electronics and Pacific Coast Parts. Additionally, Photofact® and Photofact® Gold can be purchased from your local SAMS distributor or directly from Sams Technical Publishing

ES&T BEST IDEA CONTEST

$50 Winner – Glen L. Wolfe, CBET

In response to the guest editorial in the August 2001 issue of *Electronic Servicing & Technology* I would like to point out several possible service opportunities that may help lead to some efficient and steady carry-in business.

I am approaching this from the customer end as I am a Biomedical Equipment Technician working in a hospital. Our profession has felt similar tightening of the purse strings that all service persons have felt recently.

In order for in-house biomeds to survive we have had to take on the responsibility of coordinating and maintaining equipment outside of our expertise. Some of this new equipment includes fax machines, television sets, VCRs, DVD players, and UPSs.

I have found that the best approach for us (biomedical technicians) is to perform a first-look assessment and then either perform the simple repair or send the malfunctioning equipment to an experienced professional.

We have established a relationship with several local independent service establishments to support us in our areas of need. What has transpired is that a local shop has gained the business of maintaining over 100 television sets, all the same make, model and vintage.

This business was able to provide us with a reasonable repair price and we were able to screen out the simple repairs while providing continuos carry-in business to the shop. They were able to stock a minimum of parts and perform increasingly efficient repairs both in repair time and cost.

As our relationship has grown we have been able to send in medical monitors for color, horizontal and vertical adjustments. This eliminated the need to send these monitors across the country for extended periods of time for calibrations. At the same time it saved the hospital the expense of buying television/monitor test equipment that would have limited applications in our work setting.

In short, I propose that if there is a local hospital, hotel, or nursing home close to your independent repair shop, try to contact them and establish a similar relationship that is equitable to both them and you.

EARN $50.00 FOR YOUR BEST IDEA OF THE MONTH!

Often the best technical and business tips come from other servicers. Share your ideas with ES&T readers and you may receive $50.00 for you effort.

Each month ES&T will publish one or two business or technical tips submitted. Those selected will receive $50.00 and a certificate of recognition.

Send your idea to:
ES&T Best Ideas Contest,
POB 748, Port Washington, NY 11050,
or email it to: dallen@mainlymarketing.com.

All selections will be made by the ES&T staff and their decisions will be final. In the case of duplicate entries, the first received will be selected. By submitting your entry, you give permission for ES&T to use it in the magazine, on the Internet and all other related promotional materials.

2002 International CES®

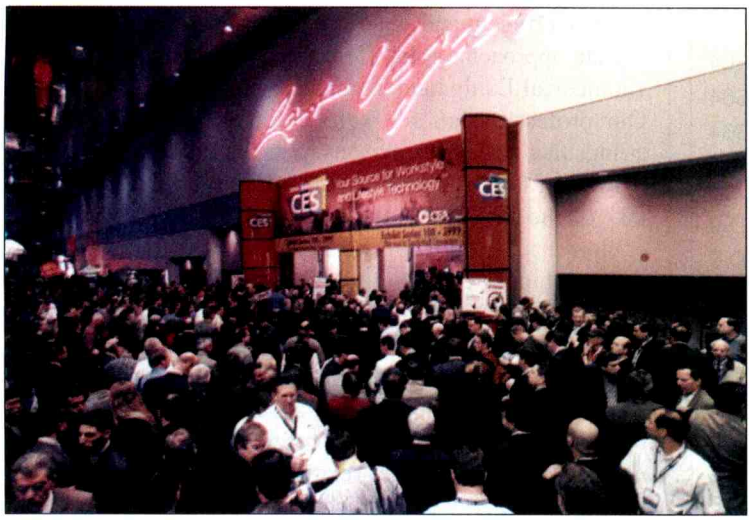

Grand Lobby of the Las Vegas Convention Center packed with attendees.

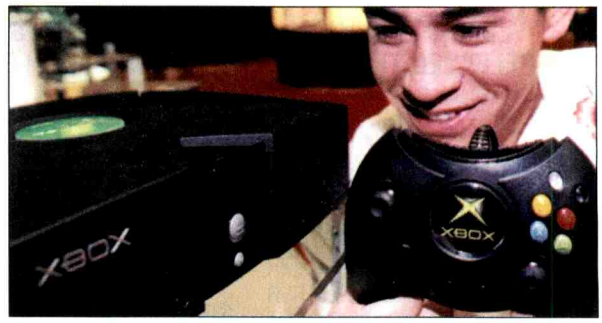

The XBox, Microsoft's new video game unit.

Automotive electronics had a large presence at the show.

Almost 100,000 industry professionals from 106 countries came to Las Vegas during the week of January 8 to see the latest and greatest in workstyle and lifestyle technologies at the 2002 International Consumer Electronics Show (CES). America's largest technology trade show featured four days of conferences, keynote speeches, technology pavilions and exhibits.

The focus was the evolution of more powerful and efficient wireless and digital technologies in the areas of video, high-end or "extreme" audio, wireless communications, accessories, consumer electronics fashion, consumer technology networking, broadband, mobile electronics, content media, new business technology, delivery systems and the Internet. Smaller, thinner technologies on display were evidence that exhibitors are busy upgrading their products to make them more compact and efficient.

More than 250 wireless exhibitors showered the show floor with amazing new technologies. Carriers such as Sprint and Verizon joined wireless manufacturers and distributors, including Audiovox, Brightpoint, Cellstar, Kyocera, Nokia and Samsung.

CES was the platform for many companies including Fujitsu, Hitachi, Panasonic, Philips, Pioneer, Runco, Samsung, Sony, Sanyo Fisher, Sharp, Thomson, Toshiba and Zenith to display the latest advancements in video, including digital television (DTV). Much like wireless, video technologies are being incorporated into many different product areas, and this convergence was evident on the show floor. Products such as the Panasonic Desktop LCD TV/DVD Player, the SONICblue Replay TV, the DIRECWAY Gateway by Hughes Network Systems and the DishPVR 721 by EchoStar were just some of the latest video products on the show floor this week. The continued relevant success of DTV was reflected at this year's CES with more than 10 companies displaying DTV products.

The ISUN from ICP Global Technologies is a lightweight portable solar charger for cell phones and other small electronics.

Home networking and entertainment continued to gain ground, with the home intranet becoming almost as big of a driver as the Internet. Such products on display included the Kenwood Sovereign EntrÈ Entertainment Hub, the Xanboo Wireless Internet Home Management System and Moxi Digital's Moxi Media Center.

Digital and high-end audio was displayed prominently on the Las Vegas Convention Center (LVCC) show floor and at the Alexis Park Hotel. The 2002 CES featured a number of recent innovations in audio, including MP3, PC audio receivers, DVD Audio, Super Audio CD (SACD) and THX for home theater applications, among others. The demand for smaller, more portable technologies enabling consumers to listen and streamline music and audio was also evident.

In the mobile electronics display, new products on the show floor reflected the demand for technology in the automobile. In-car entertainment, navigational and security technology and driver safety were addressed in several exhibits.

Five Keynote Addresses

Five keynote addresses beginning with a pre-show address by Bill Gates, chairman and chief software architect for Microsoft.

Dr. Daeje Chin, president and CEO of digital media business for Samsung

The Elecronics Technicians Association (ETA) and the Professional Sericers Association (PSA) were in attendance.

Satellite radio, a reletively service, made a big splash.

There were TV/Video display screens of every type of technology: CRT, digital light projection (DLP), plasma, LCD, rear projection.

Electronics, gave the opening keynote address.

In another packed keynote, Carly Fiorina, CEO of Hewlett-Packard, explained her vision for HP and its role in digital imaging.

Wednesday afternoon, Gerard Kleisterlee, president and CEO of Royal Philips Electronics, gave his vision of how electronics will evolve by the year 2020.

Closing out the keynote sessions, William Esrey, chairman and CEO of Sprint Corp., outlined the future of wireless communications.

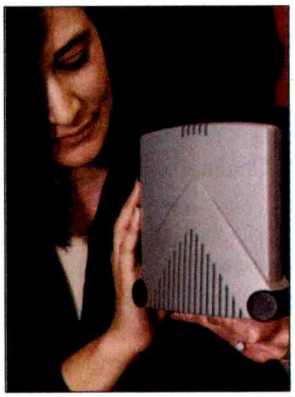

Phoenix Broadband's Never Wire 14. 2002 Best of Innovaitons Award for Home Data Networking.

New this year, CES unveiled its first fashion show further blurring the line between fashion, products and accessories. Using the underlying themes of color, fashion and future, models strolled the runway with the latest in clothes, accessories and wearable products to the delight of hundreds of attendees. (See Editorial)

A Merger and a New Show

The 2002 CES was the platform for two major industry announcements. One announcement was the merger of CEA with the Home Automation and Networking Association (HANA).

In addition, CEA and Deutsche Messe AG (the Hannover Trade Fair Authority, or DMAG), owner and organizer of CeBIT Hannover, announced a partnership to co-organize and launch CeBIT CES Consumer Electronics Show from May 29 - June 1, 2002, at the New International Expo Center in Shanghai.

17 Pavilions

Seventeen pavilions displayed the best and newest technologies in the industry.

- The Wi-Fi Pavilion, aimed to promote Wi-Fi as the global, wireless LAN standard across all market segments.
- Bluetooth wireless technology enables two-way transmission of data, making efficient, fast, flawless wireless connections a reality.
- The Digital Entertainment Village combined interactive entertainment, digital audio and technological imaging advances. It included:

**The Gaming and Interactive Entertainment Pavilion.*
** MP3 and Internet Audio Zone.*
** Imaging Technology Pavilion.*

- The Digital Car Showroom allowed attendees to see and test the latest mobile technologies.
- The Intelligent Transportation System Data Bus (IDB) defines the industry's first set of interface standards for automotive information, communications and entertainment systems.
- DVD-R/RW Pavilion from RWPPI : The latest DVD-R/RW recording hardware and blank media were showcased.
- For the first time at CES, the Energy Efficiency Center included products that either promote energy efficiency or are energy efficient.
- HomePNA (Home Phoneline Networking Alliance) presented the ease of networking the home using a single, unified phoneline networking industry standard.
- The Digital Home Appliance Pavilion showcased products that are at the core of the networked home.
- Emerging Technologies Launchpad: Next-generation consumer electronics products were featured at the Emerging Technologies Launchpad.
- The Palm Solutions Providers Pavilion showcased the latest Palm accessories, software and hardware.
- As demand for new digital technology applications reaches critical mass, memory storage will be a question pertinent to the global business as well as the local teenager.
- The Sony Memory Stick is flash memory and storage, plus more, with its goal to be the universal media for digital transfer and exchange.
- The Security and Contingency Planning Pavilion featured the newest safety and security products available.

While attendance dropped from CES record breaking shows in 2000 and 2001, the 2002 attendance total of 97,962 surpassed the 1999 mark of 97,370.

Home automation systems, such as this Omni system from Home Automation Inc. (HAI) were prominent at CES 2002.

New Products

BGA Reballer Kits

PACE, Incorporated introduces a line of BGA Reballer Kits. The reballing system allows you to remove a component

and re-establish the solder spheres on the ball grid array. Therefore, you are able to reuse your components. Each kit contains the Reballer fixture, 10,000 solder spheres of the correct size, flux, tweezers, and a tool to seat the solder spheres. The Reballer Kits are also available for chop scale and flash memory devices.

PACE
Circle (26) on Reply Card

Test Clip is 10-in-1 Value

J.S. Popper, introduces its "little giant" 10-in-1 test clip, available as the JP-2 Test Clip. This tool gives technicians unprecedented versatility in one test clip.

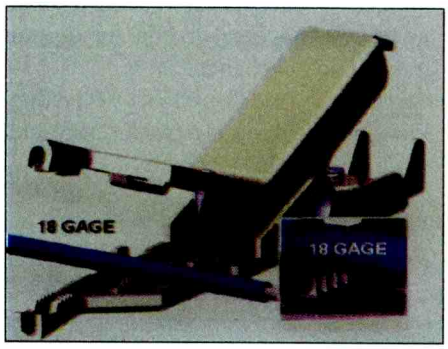

Its unique, row-of-points penetrator, together with the large single penetrator, neatly pierces insulation on nine wire sizes (10 to 26 gage).

In addition, the 10-in-1 securely grabs a wide range of wire terminals and bare conductors.

Finally, the row-of-points hardened, stainless-steel penetrators are efficient, durable, and always rust free.

Meanwhile, the row-of-points design minimizes both insulation and conductor damage because no more than two of these points actually reach the conductor.

The JP-2 Test Clip is available with a standard female banana jack that accepts test leads from common electrical meters and oscilloscopes. Users who prefer to permanently attach their own test leads can order the clip without a banana jack, as illustrated. The clip's jaws are made of a solder-friendly copper/nickel alloy.

J.S. Popper, Inc.
Circle (27) on Reply Card

Xantech Introduces Three Amplifiers

PA1235X (12-channel) and PA635X (6-channel) Power Amplifiers engineered for systems using a multi-zone pre-amp that do not require having IR controls in the amplifier5.

These amps feature

- 12-channels x35W/channel (PA 1235X); 6-channels x 35W/Channel (PA635X)
- Selectable channel modes
- DC voltage controlled (main power)
- Low impedance capability
- Auto protection
- Rack mountable
- Front panel status LED's
- Also available in 240VAC/50Hz

PA635 (6-channel) Power Amplifier with Built-in IR is engineered for systems that do not require the sophistication of multi-zone distribution, this amplifier offers features found on no other multi-channel amplifier including on-board IR control of volume, balance, mute and preset audio levels. The PA1235 and PA635 are the backbone of whole-house audio distribution systems for a variety of applications from custom residential systems to restaurants or any job featuring single source audio distribution with individual volume control from remote locations.

Xantech Quick-FactsTM

- 6-channels x 35W/channel
- Selectable channel modes
- IR controlled level, balance, and mute
- Local or common buss
- IR and DC voltage controlled
- Low impedance capability
- Auto protection
- Rack mountable
- Front panel status LED's
- Requires RC68+programmer for IR control
- Also available in 240VAC/50Hz

Xantech
Circle (28) on Reply Card

New "CSW" Cut-Strip-Wrap Tool

JDV Products introduces three sizes 26AWG, 28AWG and 30AWG for Low Strip Force Kynar®. The CSW tool eliminates the cable preparation steps required for standard Wire Wrapping. The CSW tool does all the steps in one easy operation.

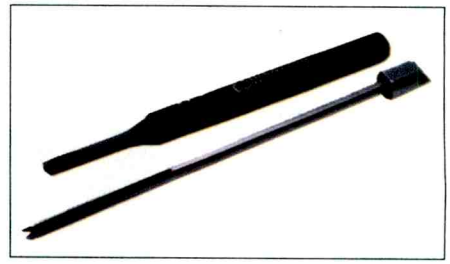

- Eliminates pre-cutting, pre-stripping
- Cuts-Strips-Wraps in one operation
- Easy Front-loading as with standard bits
- Ideal for terminating cable and wire harnesses
- Increases Productivity

JDV Products Inc.
Circle (29) on Reply Card

Environmentally Safe Cleaners

T.A. Emerald Industries has launched a brand new product line of environmentally safe precision cleaning products call Puretronics. Developed specifically for electronic applications, the broad general line consist of different strength precision contact cleaners, flux removers, dusters, cleaner/lubricate, circuit freeze and a plastic/glass cleaner. Puretronics is being marketed as a high quality, performance-driven product line with list prices that provide outstanding value to the end user.

T.A. Emerald Industries
Circle (30) on Reply Card

Wireless Credit Card Processor

Virtual Solutions announces the availability of their wireless Visa/MasterCard Processing device. According to the manufacturer, users of this "new generation" battery powered transmitter can

New Products

receive electronic authorization of a credit card in as little as seven seconds, in the customer's home, without a phone line or electrical outlet. Using this device, a technician can be assured that the transaction is approved, and can avoid creating paper sales drafts that can be lost.

Virtual Solutions
Circle (31) on Reply Card

Probe-Style Digital Multimeter

WAVETEK Meterman™ has introduced the DM73B-a pen-shaped, probe-style digital multimeter (DMM).

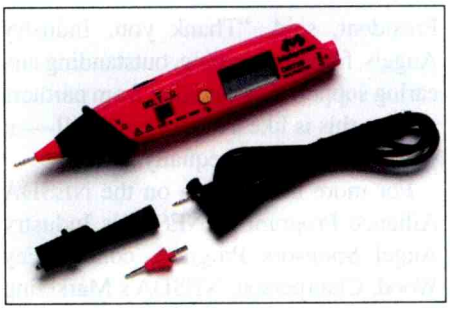

Weighing in at less than four ounces, slightly over an inch wide, and under eight inches in length, this DMM is ideal for troubleshooting lighting and production machinery, as well as for plant engineers.

Designed specifically for hard-to-reach electrical and electronic measurement spots, the unit DM73B offers a host of functions. It measures ac and dc voltage, resistance, and continuity. A "Touch Hold" function freezes the measurement value on the display allowing the user to concentrate safely on the test area.

WAVETEK Meterman
Circle (32) on Reply Card

Telephone Line Analyzer

This basic tester features two cables and two modular plugs for standard RJ-11 phone jacks and RJ-45 phone jacks which are becoming more common as homeowners and home-based businesses bring more lines into a site. The product carries a lifetime warranty and has a LED lights so the user can identify correct wiring, reverse polarity, and shorted or open pairs quickly and accurately.

The unit quickly identifies problems simply by pluging into a wall jack. Allows homeowners or other users to determine if a phone problem is in the incoming line or

handset. The lead from the tester is simply plugged into a phone jack and if the jack tests OK, the user knows that the problems is in the handset, so a service call to the phone company is unnecessary. Helpful to homeowners but also useful to installers, contractors or electricians working in a home or small business where a number of phone lines are being tested.

Cooper Tools
Circle (33) on Reply Card

Industrial Component Testing System

Sencore Inc., announces the introduction of the portable, battery operated LC103 – Capacitor and Inductor Analyzer and STA260 Power Semiconductor Tester. The two products team up to create an Industrial Component Test System that lets you dynamically and accurately test capacitors, inductors and power semiconductors including IGBT's and SCR's.

The system measures and analyzes capacitors for all of the ways that they fail including value (1 pf to 20 F), equivalent series resistance, dielectric absorption and leakage up to 1,000 volts applied for a true indication of the capac-

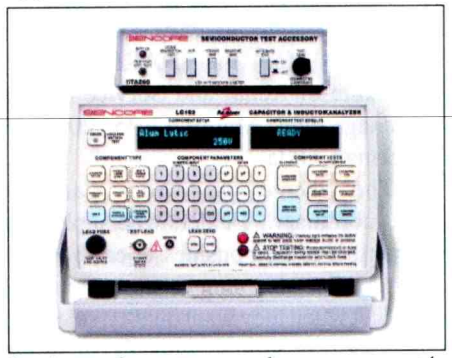

itor's performance at the componentís working voltage. The system measures capacitors for value and equivalent series resistance both in and out of circuit eliminating the need for removing the component from the circuit to make the test.

The system dynamically tests power semiconductors including IGBT's, triacs, SCRs, diodes, FETs, and Bipolar transistors at full working voltage. It automatically applies the proper gate/base signal to turn on three leaded power components for analysis. Additionally it tests these components for leakage with up to 1,000 volts applied for identifying high voltage shorts (shorts that other testers miss with a much lower applied voltage).

The unit also dynamically analyzes inductors for value (0.1 uH to 20 H) and with the patented ringing test. The Ringer test helps you isolate shorts and opens in transformers that other testers miss. The inductor value measurement can be made both in and out of circuit.

Sencore Electronics
Circle (34) on Reply Card

Low Shrinkage/Low Movement Optically Clear Lens Bonding Adhesives

Dymax Corporation offers a new line of lens assembly adhesives for precision bonding, mounting, laminating and fixturing applications. Specific applications

types include doublet bonding, lens laminating, mirror, prism and fiber optic assembly, as well as adhesives for use as temporary assembly aids.

DYMAX adhesives are designed to cure fully when exposed to low to medium intensity UV and visible light in the 300-500 nm range. The adhesives have unlimited pot life and cure "on demand" in seconds, eliminating long cure time and racking so parts are ready to be shipped for J.I.T. delivery. DYMAX offers a full line of compatible UV light sources for most application needs, from high intensity spot wand and flood lamps to tabletop conveyors

DYMAX Corporation
Circle (35) on Reply Card

Association News

NESDA Kicks Off Its "Industry Angel" Sponsorship Program

NESDA, the National Electronics Service Dealers Association, has announced the creation of a new sponsorship program that will bring the service industry closer together in stronger support of servicers.

NESDA is seeking sponsorships for servicers from the industry, starting with manufacturers, and immediately followed by parts distributors, TPA's, software developers and others. This newly-created marketing program will allow manufacturers, distributors, third-party administrators, software developers and other companies that provide support for the industry to directly participate. The program allows sponsors to provide memberships (as many as they would like) to servicers in different NESDA regions in the country. By securing these servicers as NESDA members the sponsors are promoting a higher level of awareness for outstanding service to their customers and end users while capturing mindshare loyalty from the servicers being sponsored.

NESDA industry sponsors will be providing membership in NESDA, and going to deserving servicers designated from a pool of candidates prepared by NESDA and approved by the sponsors. These sponsors will receive personal thanks from the NESDA Board of Directors, publicity on the NESDA website, and favorable mentions at regional and national events.

NESDA is delighted to announce that Toshiba America Consumer Products has stepped forward to become the first Industry Angel of this new program, closely followed by Mitsubishi, Samsung, Tritronics, Kenwood, Hitachi, LGZenith, Sony, JVC, and B&D Enterprises with more pledges coming in. In announcing Toshiba's participation, Chris Fabian , Vice President of Toshiba's National Service Division, said, "As a member of the service community, Toshiba's National Service Division will do its part to help the community prosper and grow. Toshiba's will sponsor one new membership in each of the ten NESDA regions. NESDA's leadership will select new members from Toshiba's authorized service network first, and then from the service community at large, ensuring fairness and the best candidates for these sponsorships. We at Toshiba's feel strengthening the ties between our company and NESDA's service network benefits us all"

In responding to the generous support of Toshiba's and the other participating manufacturers, John Eubanks, NESDA President, said, "Thank you, Industry Angels, for your ongoing, outstanding and caring support. Cooperation from partners such as this is like a tide of goodwill — it will lift every vessel equally."

For more information on the NESDA Alliance Program or NESDA's Industry Angel Sponsors Program, contact Fay Wood, Chairperson, NESDA's Marketing Committee and Special Advisor to the NESDA Board of Directors at fay@satisfusion.com or 562-290-1376.

NARDA Directors Elected

Lombard, IL.- Three dealers have been re-elected to three-year terms on the Board of Directors of the North American Retail Dealers Association (NARDA) in a December mail-in ballot, announced NARDA President Michael Fischer, Nielson Tire Co. Inc., Spencer, Iowa .

The three directors are Michael Corder, Hod's Home Electronics Center, Waterford, Mich.; Kent Renier, Renier Co., Dubuque, Iowa; and Timothy Seavey, Seavey's Furniture and Appliance, Inc., Windham, Maine.

Renier represents the fourth generation to manage his family's retail company, which has been in business for more than 100 years. After extensive experience in retailing with large furniture and jewelry chains, Renier became president of the family business in Dubuque, Iowa, which now is selling consumer electronics. His father was a long-time NARDA board member.

"My family has been involved with NARDA since its inception and owes a great deal to this industry and NARDA for our continued success," he affirmed in his nominating statement. "I am repaying some of our debt by serving as a border member."

Seavey is president of his family's furniture, appliance and consumer electronics dealership which has been in business around Windham, Maine, west of Portland for 81 years.

You Can Be Extraordinary Is Theme of NARDA Institute

"You can be the 'go to' retailer or the 'A list' service agency," asserts the brochure for the NARDA/NASD Institute of Retail and Service Center Management, March 22-25, 2002, in Norman, Okla.

The theme is, "You Can Be Extraordinary." Dealers who apply best practices to their businesses can become the retailers that manufacturers seek out of first when they want quality, selection and service. Service agencies can be the ones manufacturers offer their profitable programs to and those in consumers' personal address books under "service."

When announcing the program, NARDA president Michael Fischer, "In every market, there are businesses that stand out over the competition because of their reputations. They have become destination stores in consumers' minds because they have learned to apply the best practices to every aspect of their business.

"This Institute program will show retailers and service agencies how to apply those best practices to their businesses and how to become consumers' first choice in their markets."

The program offers separate sessions for retail owners and managers and service agency owners and managers in addition to sessions for both on general business topics to total 34 different subjects.

Consortium for Certified Service Centers Making Progress

After a series of organizational and planning meetings, the Consortium for Certified Service Centers held its first Annual Meeting on January 11, 2002 following CES.

The Consortium is a joint effort between USA, NESDA, ETA, CEA and NASD and designed to provide the service industry with a recognizable and recognized servicer certification system.

Approximately 20 industry representatives attended the meeting led by Dick Glass of ETA.

Key discussions beyond simple procedural efforts covered the qualifications required to be considered a Certified Service Center, the cost of becoming a CSC, and the election of new officers for 2002.

Keys to becoming a Certified Service Center included: Posted Warranty Policies, Basic Equipment lists (by type of product serviced), Written Customer Service Policy, Minimum (25%) of technicians having met associate level technical examinations, minimum of one employee having passed the Certified Service Center Manager exam or equivalent approved management course, plus proper licensing and insurance.

The dues were set at $475 for three years with significant discounts for increasing percentages of certified technicians and Service Managers...and for membership in one of the five consortium member organizations.

Service Centers Earn These Discounts on their Three Year Dues:

$90.00	For membership in NESDA, ETA or any other of the five organizations
$90.00	If 50% of Techs are CETs
$90.00	More, if 100% of Techs are CETs
$25.00	For additional Customer Service Manager
Total:	$295.00 in discounts from $475.00 equals $180.00 or $60.00 per year.

New Officers Elected for 2002:

Randy Whitehead, NARDA
President

Vic Gerry, NESDA
Vice President

Ron Sawyer, PSA
Treasurer

Karen Krzmarzick, CEA
Secretary

NESDA Manufacturers Summit at CES
Big Screens and Home Theater equal the Servicer's Future

On the Thursday of CES, NESDA sponsored another Service Summit meeting at the Riviera Hotel in Las Vegas.

There were 60-65 attendees, including most of the major home electronics manufacturers: Sony, Kenwood, Philips, Sharp, LG Zenith, Hitachi, Toshiba, Thomson, and more. Additional representatives included key executives from Warrantech, CES, ETA, NESDA and ES&T.

Wayne Markman, NESDA, opened the meeting with a dissertation on the difficulties facing the independent servicers, including:

- Not getting paid for non-service issues and calls from consumers.
- Confusion and difficulties sorting out what can and cannot be serviced when products are sold by Sears and other major retailers. The observation was that "If Sears cannot, or will not, service the product, the independent is often expected to do so. This was viewed as unfair my Markman as it meant the independent servicer was called on only for the difficult service jobs.
- Manufacturers are requiring additional codes for warranty claims, making more work for the servicer.
- Servicers need a standard for disposal of CRTs.
- There is a severe technician shortage, and the industry cannot attract new technicians at $20 to $25 K per year.

This was followed by a series of conversations about coding, duplication of effort, component level repair issues, on line service help, poor telephone accessability and response, cost of on ine and telephone assistance, the cost of in home service and observations that the 27' TV is no longer a profitable repair. ...and 32" are approaching the same equation.

Preliminary

All of this conversation was without input from any manufacturer.

After a break, the decision was made to ask each attendee to provide their observations and input to the overall business at hand.

ES&T asked "what do the manufacturers want in terms of service levels, support and people over the next 2-5 years." Responses included "The industry moves so fast we do not know" to "Of course we all have multiple year plans and estimates of our requirements".

The ES&T query was followed by Warrantech's Jim Rolinson who said that there were really only three questions to ask.

Do we need in home service?	Yes	No
In the major cities	Yes	No
Outside the major cities	Yes	No

"If all three are yes, then what do we do from here?"

At that point every Home Electronics manufacturer echoed virtually the same theme

- In home service is the future.
- Servicers must think in terms of value-added products and services rather than just fixing a product.
- Depot services will handle much of the smaller product repairs and service.
- In home systems will become modular, with component level repair diminishing greatly.

One additional observation made by a manufacturer as a side comment was, "The servicers did not ask for any specific item".

Another opinion expressed privately to ES&T was the failure of the participants to ask tough questions like "are you going to ignore servicers who do not perform in home service?"

READERS' EXCHANGE

Readers' Exchange is a free service for ES&T paid subscribers only. Please include a copy of a recent address label with your Readers' Exchange Copy. The following restrictions apply to Readers' Exchange:

- Only individual readers may use Readers' Exchange, and items must be restricted to those that are ordinarily associated with consumer electronics as a business or hobby. If you're in business to sell the item(s) you want to offer for sale, the appropriate place for your message is in a paid advertisement, not Readers' Exchange.
- Readers' Exchange items must be restricted to no more than three items each for wanted and for sale.
- All submissions must be typed or printed clearly!

Send your Readers' Exchange submissions to:
Readers' Exchange • Electronic Servicing & Technology • 403 Main Street, 2nd Floor, Port Washington, NY 11050
Tel: 516-883-3382 Fax: 516-883-2162

FOR SALE

Sencore SC3100 scope, $800.00. Sencore PR570, $400.00. Sencore HP200 HV probe, $25.00. Items like new, hardly used. Call Sam (916) 655-3365.

Sams Photofact 1-1000 with filing cabinets $350, B&K digital 100mhz scope new in box $450, VC63 & NT64 Sencore accessories for VA62 $75 for both, Hickok I-177B tube tester $50, B&K 1075 TV analyzer $100, Sencore DVM meter $25, Heath W5 tube Amp $100. Call Jim (708) 891-5550 or after 5 CST (708) 730-1549.

Tuned SIG Tracer $20, 500w Stancor isolation xfomer $40, 40K HI E-meter (heath) $25, Car Buffs — charging sy-tester, ignition tester, Digital Analyzer all 3 for $90, 5IV SS 10mhz scope $125. Leonard Duschenchuk 1519A NW Amherst Drive, Pt. St. Lucie, FL 34986-2445. (561) 871-5831.

Radios, test equipment, literature, tubes. Must sell due to health problems. Send $2.38 S.A.S.E. Paul M. Williams, 2364 Beaver Valley Pike, New Providence, RI 11560-9622, (717) 786-3803.

Sencore VC93 Video Analyzer, like new, all probes, manual, Video tapes, $450.00. Tektronix Dual Trace Oscilloscope model 2247A with accessories, $350.00. Tentelometer and Huntron tracker. Everything for a total of $900.00 Contact James Wajid 914-831-5981.

B&K Model 1460 Solid state, Triggered Sweep Scope. D.C. to 10 MHz bandwidth with mv/cm sensitivity, year 1970. All manuals and in original shipping box, 10:1 and direct probe. $50 plus shipping, price new $400. B&K High Voltage probe, Pix Tube anode, 0 to 30 Kilovolts, with manual, $10 plus shipping. Sencore TF26 Cricket, Transistor and FET tester w/manual, $25 plus shipping. Sencore TF40 Pocket Cricket, Transistor and FET tester w/manual, $25 plus shipping. Eico Model 324 RF Signal Generator w/manual, year 1970. $25 plus shipping. Model BG10 electrotech mini-bar digital color generator w/manual, $20 plus shipping. Telematic Universal Test Rig, 19" color pix tube, for tube and solid state servicing, with manuals and all kind of adapters for Many, Many pix tubes, year 1977. $100, can't ship, too big. All items have manuals. Wallace W. Huffman, 2579E 550N, Warsaw, IN. 46582-1783,call 219-453-4811.

NEC projection TV 45" 1990 model (was Colortyme model PJ 4310 W14A chassis) 3 CRTs complete assembly, has #74922017 (026) on lens $ 75.00 or best offer. Also boards etc, best offer, had PWC2924 motherboard. Call 615-563-5634.

WANTED

Onkyo Tuner Amp. I need a power amp STK4913. Contact Mike at (757) 672-6199 Cell. Home (767) 482-4527.

Sony DM22 (#123561011) B+ regulator module, 834-00361 Zenith FF/Rewidler. Country Roads TV, 6831 W. Potter Rd. Bear Lake, MI 49814. Fax: 231-864-3988, Phone: 231-864-2446.

Need Mitsubishi flyback transformer part #334p167080 or EVG/Russell suggested part number FBT-212. Will pay fair price. Please contact Bing Huie, P.O. Box 2634, Alameda, California 94501. 510-523-9087

Tektronics Scope Type 647A. We need CRT. Part T6470-31-1. New or a good used CRT. Corrado Electronics Repairs. 603-774-7864. Will pay going price.

Looking for schematic for a Curtis Mathis color TV model A-2656-R6. Chassis C-849 will buy at reasonable price. Willie's TV P.O. Box 252 Planada, CA 95365.

Wanted to buy. Diehl Mark 4 and Diehl Mark 7 Testers. Also Service Manual for Philips Magnavox – Model 25TR15-C122. Copy or Buy. Murrays Repair Service (561) 966-8862.

DON'T MISS A SINGLE ISSUE OF ELECTRONIC SERVICING & TECHNOLOGY

THE MAGAZINE FOR PROFESSIONAL ELECTRONIC AND COMPUTER SERVICERS
ELECTRONIC Servicing & Technology

As a subscriber to ES&T you don't want to miss a single issue of the trouble shooting, diagnostics or profax information in every issue...

Renew Your Subscription Now!

Check your label for your expiration date!
Your expiration date is here:

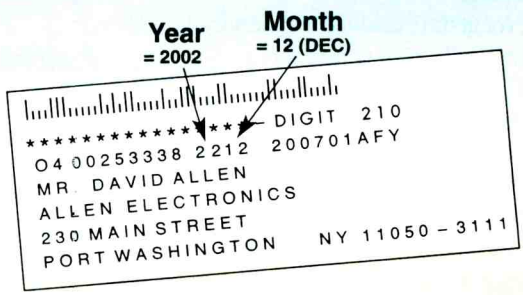

BY PHONE: (516) 883-3382
BY FAX: (516) 883-2162
BY MAIL: ES&T Circulation, 403 Main St., Floor 2, Port Washington, NY 11050

BY WEB: www.electronic-servicing.com
Please Include you name, address, check, or credit card information (including expiration date), and an address label if available.

Circle (36) on Reply Card

CLASSIFIED

CLASSIFIED ADVERTISING By the word. $1.65 per word, per insertion, pre-paid. Minimum charge is $35 per insertion. Initials and abbreviations count as full words. Indicate free category heading (For Sale, Business Opportunities, Miscellaneous, Wanted). Blind ads (replies sent to ES&T for forwarding) are $40 additional. No agency discounts are allowed for classified advertising. For further information, or to place your order, contact:

Lyndiane Paoletti, Electronic Servicing & Technology
403 Main Street, 2nd Floor, Port Washington, NY 11050
Tel: 516-883-3382 Fax: 516-883-2162

FOR SALE

ANY Tuner we rebuild is $25, YES $25, YES $25, YES $25! Includes FREE Shipping and Handling. *BUY - SELL - TRADE* **Tip Top TV**, 18441 Sherman Way, Reseda, CA 91335. **818-345-1974.**

IN-CIRCUIT CAPACITOR TESTER – Find bad caps FAST and RELIABLY with the Capacitor Wizard in-circuit ESR Tester! Great for monitors, switching power supplies, TV, etc. Still only $179.95. MC/VISA. **Independence Electronics Inc. 800-833-1094. www.awiz.com.**

TV CASE HISTORIES: Volume 9 with 3,500+ histories. Satisfaction assured. Only $63.00 (plus $3.95 shipping). Over 12,700 books and supplements sold with only 1 returned for a refund! **Mike's Repair Service**, P.O. Box 217, Aberdeen Proving Ground, MD 21005. Same mailing address 38+ years. Send SASE for samples. 410-272-4984,1-800-2-FIX-TVS 11a.m.-9 p.m. (http://mikesrs.no-frills.net).

FURTHER PRICE REDUCTION! New Diehl Mark III $29, Diehl Mark V Horizontal circuit tester $99. Conductive coating for remote control keypads $9.99 ppd. WEEC, 2411 Nob Hill Road, Madison, WI 53713. 608-238-4629.

UNIVERSAL CLIP-ON CRT ADAPTER Converts "any" crt tester for use on "all" crt's. Big screen, projection, color. MC/VISA, FREE 1 877-280-3598 www.dandee@geotec.net $79.00 ppd. Money Back.

SENCORE refurbished equipment for sale. (All Models) Like new and fully warrantied! Financing, Visa and M/C. 800-609-0677 ask for Lance Tople.

EMPLOYMENT

EXPERIENCED TV TECHNICIANS, Combination in home service and bench repair. Performance incentives. **Apply at www.unitedradio.com or call Nick 315-445-3315.**

BUSINESS OPPORTUNITIES

TV/VCR Repair Shop in Las Vegas, NV. Nets $75,000/year. Current owner active, but does no repairs himself. Asking $80,000 or best offer. 702-869-0622.

The Best Editorial Value For Consumer Electronics Servicing Professionals

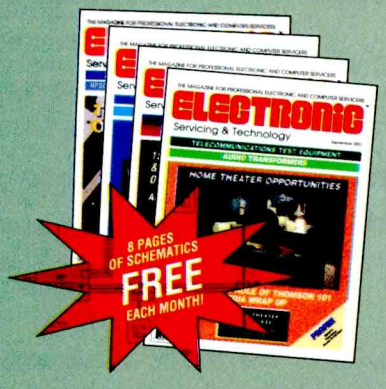

As an electronic servicing professional it is crucial for you to keep current in an industry that's always growing and changing. There's no better way to keep up than by reading ES&T.

If you require the most up-to-date trends in the consumer electronics industry, service tips, where to find replacement parts, and the latest in servicing techniques and technologies — you need ES&T Magazine. Each month ES&T brings you in-depth, how-to articles, as well as information columns that every servicer needs. And, each month you will receive free schematics supplied by manufacturers like Panasonic, Thomson, Magnavox, Hitachi, Mitsubishi, and many more!

Watch For These Features Throughout 2002

2001 Index of Articles and Profax Schematics
16th Annual WEB Directory and BUYER'S GUIDE
Antennas/Top Boxes for HDTV
Audio/Sound Installation
Auto Computer Systems
Camcorders
Cassette Mechanisms
CCTV
CD Players
Circuit Board Reworking
Computer Software Diagnostics
Cost of Service
Digital TV
Distribution SHOWCASE
DVD
Electronic Servicing Supplies
Firewire
HDTV
Home Theater Demo Site Design
Home Theater Opportunities
Home Theater Showcase
Internet Access
Keyboards/Organs
Learning Programs
Lighting
Marine Electronics
Materials Handling
Meeting Environmental Considerations
Microwave Ovens
Monitors
MPUs
Multimeters
Network Installation and Maintenance
New Technology
PC Testing Tips
Phone Systems
Playstations
Power Management
Power Supplies
Printers
R-Disk Systems
Rear Projection
Service Tips Sources
Replacement Parts SHOWCASE
Scanners
Security Systems
Servers
Service Center Management
Service Management Software
Servicing $10K + TVs
Servicing TVs Today
SMD
Soldering/Desoldering
Telecom Test Equipment
Test Equipment Update
Test Equipment SHOWCASE
Test Probes/Accessories
Tools and Toolcases SHOWCASE
Transformers
Oscilloscopes Update
VCR/TV Combos
VCRs

Shows/Conferences
CEDIA
CES
COMDEX
EH EXPO
EDS
Home Electronics Show
NASC
NPSC
PSA
PSQC
TESA
VPEA

Plus:
New Products
Literature
Books
Photofax
Industry News
Association News
and EIGHT PAGES OF PROFAX SCHEMATICS IN EVERY ISSUE.

THE MAGAZINE FOR PROFESSIONAL ELECTRONIC AND COMPUTER SERVICERS
ELECTRONIC
Servicing & Technology

SUBSCRIBE TODAY!

SUBSCRIPTION PRICES:

United States

1 year (*12 Issues*)	$29.95
2 years (*24 Issues*)	$55.95
3 years (*36 Issues*)	$75.95 ◄ BEST BUY!

Canada/Mexico

1 year (*12 Issues*)	$39.95
2 years (*24 Issues*)	$76.95
3 years (*36 Issues*)	$105.95 ◄ BEST BUY!

Foreign Air Post

1 year (*12 Issues*)	$49.95
2 years (*24 Issues*)	$95.95
3 years (*36 Issues*)	$134.95 ◄ BEST BUY!

WHEN ORDERING, INCLUDE:
Name, Title, Mailing address. Checks, Money orders (U.S. funds only) and Credit Cards Accepted (include CC # and Exp. Date when billing to your CC). If renewal, please include a copy of a recent label.

SEND REQUEST TO:
Electronic Servicing & Technology
403 Main Street, 2nd Floor
Port Washington, NY 11050

DISPLAY CLASSIFIED MARKETPLACE

DISPLAY CLASSIFIED MARKETPLACE Display Classified Marketplace $260.00 per column inch per insertion. Frequency rates available. 2 columns per page, 3 1/2" column width. Minimum size accepted: 1 column inch. Additional sizes billed in 1/4" increments. Maximum height per ad is 4", maximum width per ad is 1 column (3 1/2"). Agency discounts paid to recognized agencies if finished materials are provided. We accept AMEX, MasterCard, VISA and Discover. Optional color (determined by ES&T) $150.00 per insertion. For more information, or to place your order, contact:

Lyndiane Paoletti
Electronic Servicing & Technology
403 Main Street, 2nd Floor, Port Washington, NY 11050
Tel: 516-883-3382 Fax: 516-883-2162

Earn Your Degree at Home!
Cleveland Institute of Electronics
www.cie-wc.edu — Visit our Web Site for detailed course descriptions, tuition prices or request a **FREE** Course Catalog.
www.ciebookstore.com – Self-Paced CD Courses starting at **$14.95** ea!

Circle (38) on Reply Card

Do You Repair Electronics?
Repair databases for TV, VCR, Monitor, UL Audio, FCC, and more.
• Over 76,000 records
• Private user forums
• Live on-line chat rooms
RepairWorld.com
Electronix Corp., 1 Herald Square, Fairborn, OH 45324 (937) 878-9878

Circle (39) on Reply Card

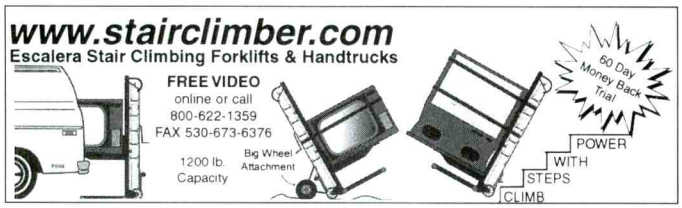

Circle (40) on Reply Card

Circle (41) on Reply Card

TUBES • TUBES • TUBES
World's Largest Range
Over 2,000 Types, Domestic & Foreign
UP TO 85% OFF Ask for price lists
International Components Corporation
Toll Free 800-645-9154 • N.Y. State 631-952-9595
175 Marcus Blvd., Hauppauge, NY 11788

Circle (42) on Reply Card

ADVERTISERS INDEX

COMPANY	PAGE NUMBER	READER SERVICE NUMBER	ADVERTISER HOTLINE
ANDREWS ELECTRONICS	21	22	(800) 289-0300
B&D	3	10	(888) 815-0508
B&K PRECISION	IFC	1-9	(800) 462-9832
B&K PRECISION	15	15-20	(800) 462-9832
CLEVELAND INSTITUTE OF ELECTRONICS	56	38	(216) 781-9400
EDS 2002	33	24	(312) 648-1140
ELECTRONIC DESIGN SPECIALISTS	17	21	(561) 487-6103
ELECTRONIC SERVICING & TECHNOLOGY:			
BOOK SHOP	IBC		(800) 462-4659
SUBSCRIPTIONS-RENEWAL	54	36	(800) 462-4659
SUBSCRIPTIONS	55	37	(800) 462-4659
ELECTRONIC TECHNICIANS ASSOCIATION	12	13	(800) 288-3824
ELECTRON X CORP.	56	39	(937) 878-9878
ESCALERA, STAIRCLIMBER	56	40	(800) 622-1359
FLUKE CORP.	9	11	(800) 44-FLUKE
HERMAN PANSON ELECTRONICS	56	41	(800) 938-4376
INTERNATIONAL COMPONENTS	56	42	(800) 645-9154
ISCET	38	25	(817) 921-9101
PLATO	13	14	(800) 423-4510
SAMS TECHNICAL PUBLISHING	23	23	(800) 428-SAMS
SENCORE	11	12	(800) SENCORE
THOMSON MULTIMEDIA INC.	BC	43	(800) 336-1900

WE'D LIKE TO SEE YOUR COMPANY LISTED HERE TOO!
CALL: **Joni Jones, 516-944-8068, e-mail: jmjones@ix.netcom.com,**
Barbara Arnold, 781-259-9207, e-mail: bhacat@tiac.net
or
David Allen, *Sales Director*, 516-883-3382,
e-mail: dallen@mainlymarketing.com

TO WORK OUT AN ADVERTISING PROGRAM TAILORED TO SUIT YOUR NEEDS.

ES&T BOOK SHOP

To Order Call Toll Free 800-462-4659

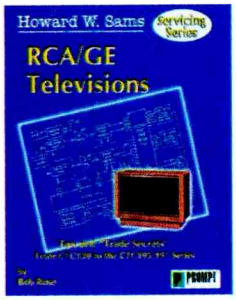

RCA/GE Televisions
(Howard W. Sams)

Expanding on the Sams Servicing Series, author Bob Rose takes an in-depth look at RCA/GE TVs, with coverage of manufacturer hr shop in Fort Dodge, IA for 38 years. He is the author of more than 43 books and more than 1,000 articles printed in 48 different magazines. He currently is the TV servicing consultant for *Electronic Servicing & Technology* magazine.

Paperback • 320 pages
ISBN 0790612240 • Sams # 61171
$34.95 US

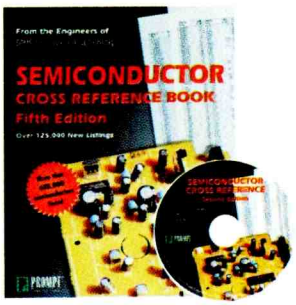

Semiconductor Cross Reference Book
Paperback or CD-ROM
by Sams Technical Publishing

The perfect companion for anyone involved in electronics! Sams has compiled years of information to help you make the most of your stock of semiconductors. Both paper and CD-ROM versions of this tool contain an additional 128,000 parts listings over the previous editions.

Paperback, 5/E • 876 pages
ISBN 0790611392 • Sams 61139
$39.95 US
CD-ROM, 2/E
ISBN 0790612313 • Sams # 61231
$39.95 US

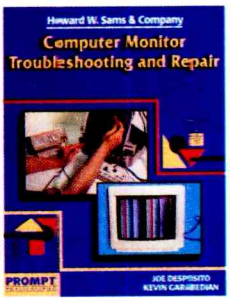

Computer Monitor Troubleshooting and Repair
By Joe Desposito
Prompt Series from Sams

This can save time and money in monitor repair. Technicians will benefit from this book as it takes the reader through the basics and on to trouble shooting circuits.

Paperback • 308 pages
ISBN 07906011007 • Sams # 61100
$34.95 US

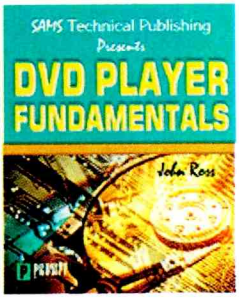

DVD Player Fundamentals
by John Ross

DVD Player Fundamentals covers every aspect of the Digital Versatile Disc starting with features, specifications, hookup, operation, user error, and more. For the professional, specific technical information includes: DVD track structure and disc construction, optical head and lens features and specifications, video signal processing, MPEG-2 technology, audio signal processing, decoding, audio path and reference signals, switch-mode power supply, tracking servo, transverse servo, system control circuits, etc.

Paperback • 304 pages
ISBN 0790611945 • Sams# 61194
$29.95 US

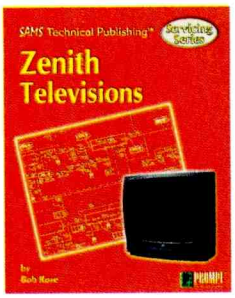

Servicing Zenith Televisions
(Sams Servicing Series)
by Bob Rose

Expanding on the Sams Servicing Series, author Bob Rose takes an in-depth look at Zenith TVs, with coverage of manufacturer OEM parts versus generic parts.

Paperback • 352 pages
ISBN 0790611716 • Sams# 61216
$34.95 US

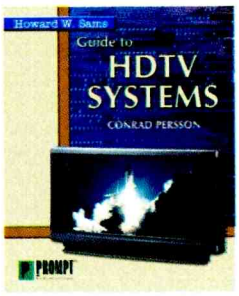

Guide to HDTV Systems
by Conrad Persson

As HDTV is developed, refined and becomes more available to the masses, technicians will be required to service them. Up until now, precious little information has been available on the subject. This book provides a detailed background on what HDTV is, the technical standards involved, how HDTV signals are generated and transmitted, and a generalized description of the circuitry an HDTV set consists of.

Paperback • 323 pages
ISBN 079061166X • Sams# 61166
$34.95 US

Servicing TV/VCR Combo Units
(Sams Servicing Series)
by Homer Davidson

Part of Sams Servicing Series, Servicing TV/VCR Combo Units covers the servicing issues surrounding this popular electronic device. TV/VCR combo units have become smaller, more affordable, and functional. They are now used in new ways, including applications in autos, campers, kitchens, and other non-traditional locations. Homer Davidson uses his vast knowledge to cover this subject in a way no one else can.

Paperback • 320 pages
ISBN 0790612240 • Sams # 61224
$34.95 US

ORDER TOLL FREE 1-800-462-4659

Make your selections and include your name, address and telephone with order.

Check, Money Order, MC, VISA, AMEX and Discover accepted. Include CC# and Expiration with order.
Make checks payable to: ***Electronic Servicing and Technology***.

Shipping: FREE on US orders over $50.
Smaller orders = $6.00.
Foreign shipping charged at actual cost (less $6.00 for orders over $50).

Call or mail order to:
Customer Service
ES&T
P.O. Box 748
Port Washington, NY 11050
Fax: 516-883-2162
Tel: 800-462-4659

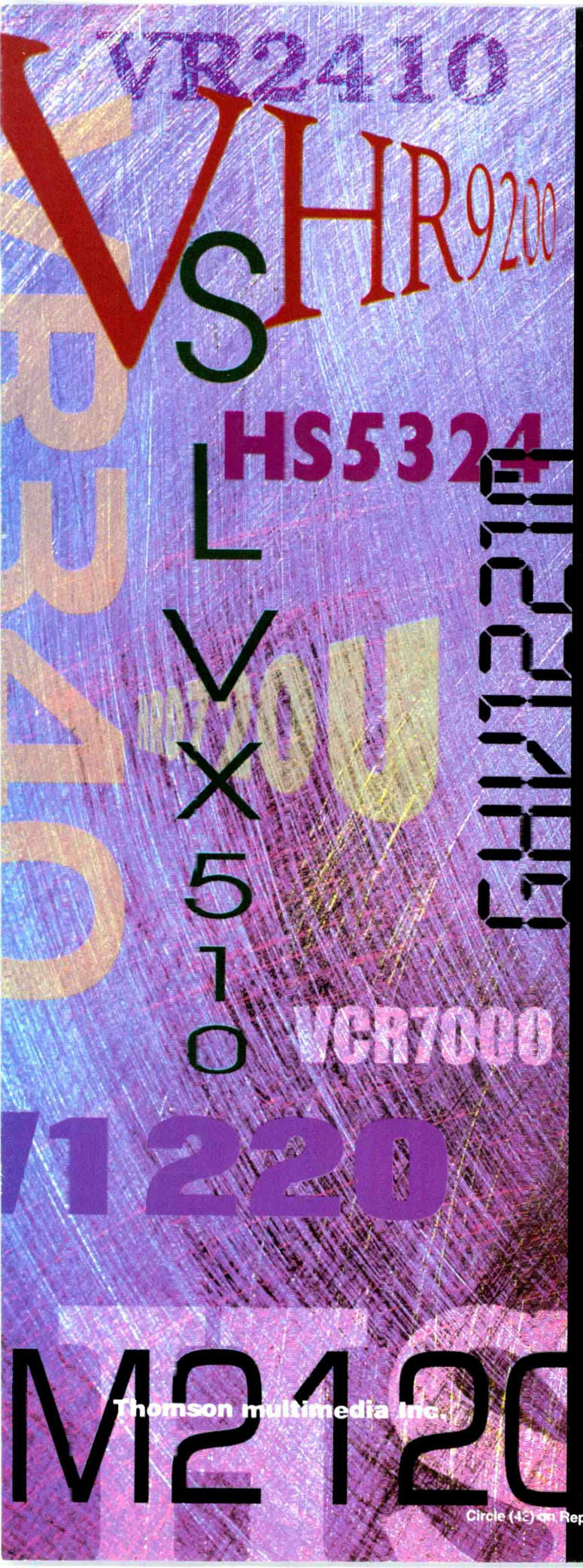

Video Heads

Pick A Number Any Number

When you're looking for a replacement head, SK Series is way ahead of the competition.

SK Series replacement video heads cross over to 4,500 different models and 68 different brands.

And when you're in need of any exact semiconductors, belts, tires, flyback transformers or video replacement parts, we have them too.

But we don't stop there.

Every SK Series product comes with the quality assurance and accuracy you expect from all Thomson products.

For more information on SK Series products, contact your nearest Thomson Distributor.

SK *Series*...The parts you need to do the job. "Trust me!"

SK Series

Circle (43) on Reply Card