Mr. A. Costin 3505

ELECTRICAL COMMUNICATION

Technical Journal of the
International Telephone and Telegraph Corporation
and Associate Companies

●

PULSE TECHNIQUES IN LINE AND RADIO COMMUNICATION

7E ROTARY TELEPHONE SWITCHING SYSTEM

MAGNETIC FLUX METER MEASURING IN THREE DIMENSIONS

MICROWAVE HIGH-SPEED CONTINUOUS PHASE SHIFTER

SWEEP-VOLTAGE GENERATOR AND COMPARATOR USING TRANSISTORS

CAPACITANCE OF SHIELDED BALANCED-PAIR LINE

TELEPHONE STATISTICS OF THE WORLD

Volume 33 **SEPTEMBER, 1956** **Number 3**

ELECTRICAL COMMUNICATION

Technical Journal of the
International Telephone and Telegraph Corporation
and Associate Companies

H. P. Westman, Editor
J. E. Schlaikjer, Assistant Editor

Published Quarterly by the
INTERNATIONAL TELEPHONE AND TELEGRAPH CORPORATION
67 BROAD STREET, NEW YORK 4, NEW YORK, U.S.A.
Edmond H. Leavey, President
Geoffrey A. Ogilvie, Vice President and Secretary

Subscription, $2.00 per year; single copies, 50 cents

Volume 33 SEPTEMBER, 1956 Number 3

CONTENTS

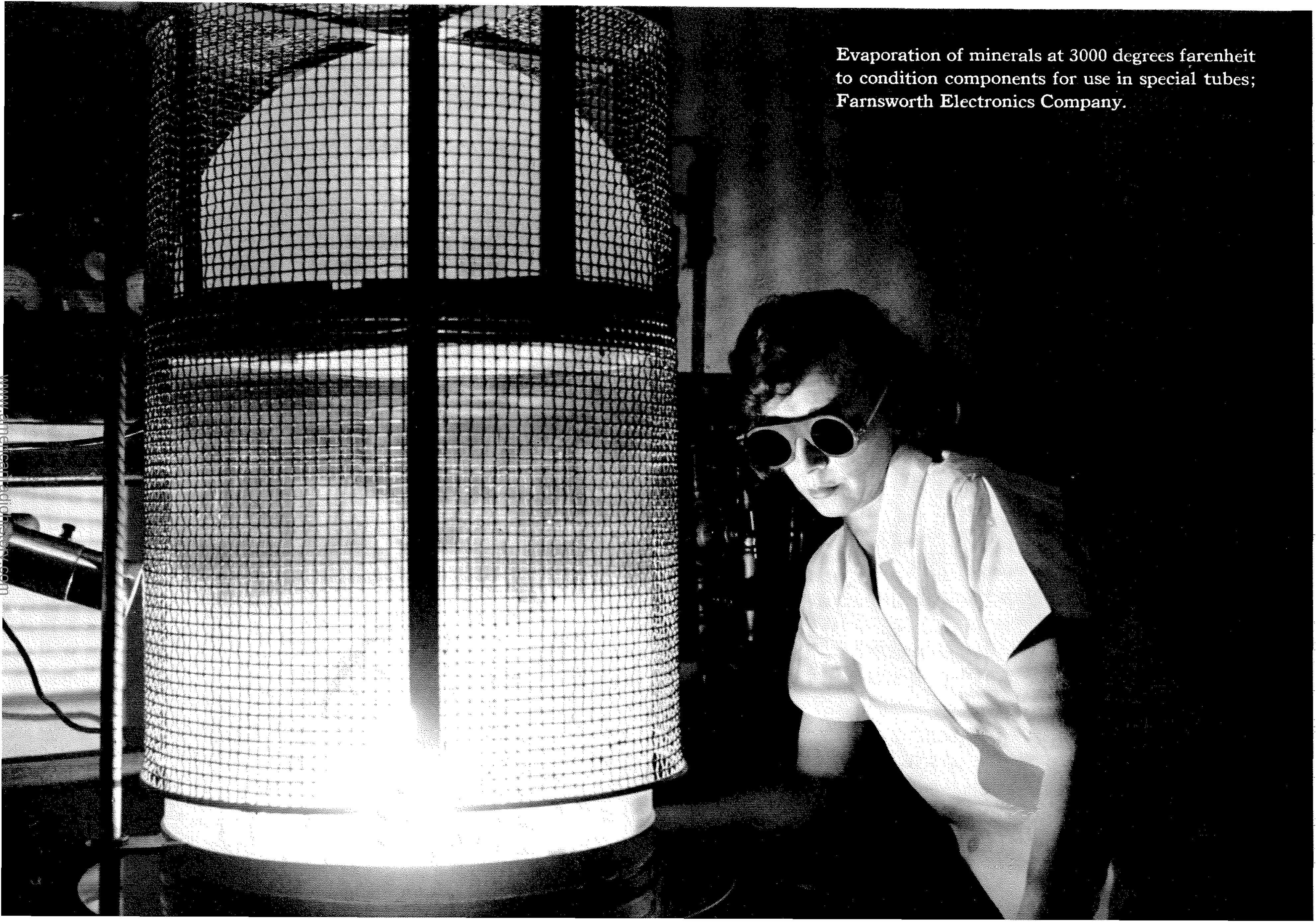

Evaporation of minerals at 3000 degrees farenheit to condition components for use in special tubes; Farnsworth Electronics Company.

Pulse Techniques with Particular Reference to Line and Radio Communication*

By E. M. DELORAINE

International Telephone and Telegraph Corporation; New York, New York

I AM greatly indebted to the Institution of Electrical Engineers for the invitation to speak on the subject of pulse techniques as applied to communication. This honour is highly appreciated. I have a feeling also, however, that some of the best informed members of the Institution had, perhaps, a little curiosity in suggesting this subject. They wanted to find out how I could disentangle myself on such a complex subject, as obviously one expects to hear how pulse-transmission methods compare with others that in some cases are more strongly established.

1. Pulses in Telegraphy

Obviously, by pulse technique is meant the transmission of information by a process involving short bursts of energy. Looking back, it is evident this is the oldest form of electrical communication, being the original telegraph method.

It is hardly necessary to remind you of a letter to the *Scots Magazine* in 1753 in which it was proposed to send the alphabet through as many insulated wires, each wire transmitting a pulse produced by discharging a Leyden jar to move at a distance a piece of paper placed under the ends of that wire.

All early telegraph proposals made use of bursts of energy from available sources until the discoveries of Volta, Oersted, Laplace, Ampère, Faraday, and Gauss laid a firm foundation 80 years later for practical telegraph systems using short pulses of current operating various types of receivers such as a magnetic needle that, depending on the current received, would hit one or the other of two small gongs. Curiously, when participating in installation work in 1922, I saw such an arrangement still in use by one of the railway companies.

It is unnecessary to cover here the progress of the telegraph art, so well known to this Institution, originally the Society of Telegraph Engineers, which has witnessed many historical developments in this field. The point that must be remembered is that pulse techniques were developed quite early in communication.

The technical achievements that followed Lord Kelvin's masterly researches on submarine telegraphy resulted in an advanced understanding of the principal factors affecting pulse transmission as they are known today. Using modern terms, the effects of line characteristics, band width, phase distortion, and noise and interference were found and understood. Such modern devices as pulse retiming, pulse reshaping, and pulse regenerative repeaters were known and developed to a high degree of perfection.

One important aspect, however, should be noted. The pulses used in telegraphy at that period and until recently have been of comparatively long duration, that is to say in the range of 1 to 50 milliseconds.

2. Pulses in Telephony

With this background, it is not surprising to find early concepts of pulse telephony: such as in the papers of Charles Bourseul in 1854 and in the experiments by Reis 29 years later, which were widely published at the time in many papers, including an article in March 1883 in the journal of this Institution, then the Society of Telegraph Engineers. They proposed what we might be tempted to call a two-level pulse-code-modulation system. The devices used to code and decode speech were too crude to be satisfactory and Reis wrote, "It has not been possible to reproduce human speech with sufficient distinction . . . the consonants are for the most part reproduced pretty distinctly, but the vowels are not yet in an equal degree."

---

* Presented before Institution of Electrical Engineers in London, England, on February 8, 1956; published in part in *Journal of the Institution of Electrical Engineers*, New Series, volume 2, pages 458–463; August, 1956.

3. *Voice Frequencies*

It is, of course, with Bell as recorded in "Telephone Researches" in the *Journal of the Society of Telegraph Engineers* in October 1877 that we find the start of a technique that was going to influence from that time onwards all telecommunication designs including telegraphy. It might be described as the technique dealing with spectra of amplitude-modulated continuous waves.

Quite early, the telephone engineers made an effort towards determining the physical nature of speech and hearing and the corresponding electrical characteristics of the translating devices from air pressures into electric current, or the reverse. They soon came to an excellent approximation to what was essential in speech, and back in the 1920's most of the requirements to be fulfilled for satisfactory speech transmission were established.

Active research took place then to achieve the transmission of such speech currents with a minimum of distortion. These studies covered continuous-wave spectra under steady-state conditions. Circuits were defined by impedance parameters and frequency functions.

The knowledge of transmission systems capable of this type of analysis was developed to a high degree of refinement through the work of a large number of scientists, among which were Oliver Heaviside, M. I. Pupin, G. A. Campbell, [illegible]. J. Zobel, and J. R. Carson.

4. *Multichannel Telephony*

One of the important results of this work was the development from 1925 on of the techniques of multichannel telephony with its resultant massive economy in the cost of circuits in open wire or cable. Many important decisions were made that remain the basis of our present systems. These involved the principle of frequency translation of the original speech channels through modulators and band filters, their assembly side by side in the frequency spectrum, the transmission over open wires or cables of the resulting group of channels, and the division back into the original channels through demodulators and filters.

These systems are typified in Figure 1. They are often called telephone carrier systems, although usually the carriers are not transmitted. They are also known as single-sideband suppressed-carrier systems.

These suppressed carriers, spaced 4-kilocycles-per-second apart, with voice-frequency bands covering approximately from 250 to 3400 cycles, constitute today the basic method of multichannel telephony over multiconductor or coaxial cables.

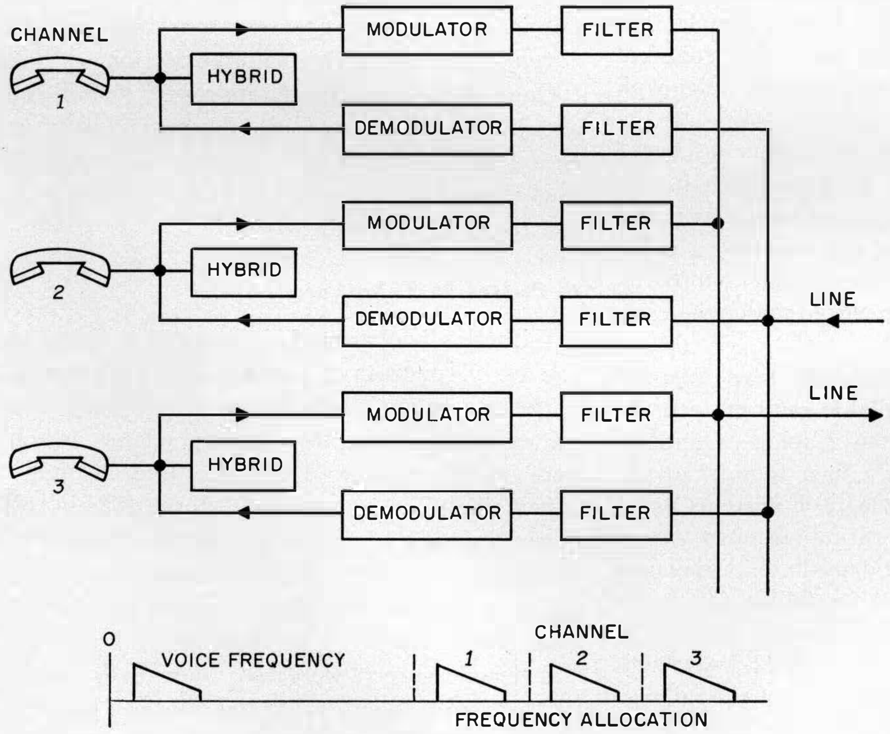

Figure 1—System of multichannel telephony. The voice-frequency band for each channel is shifted into a higher-frequency region, where the channels are arranged in compact order, for transmission to the far terminal and corresponding reduction back to the original voice-frequency band. The dashed lines indicate the frequencies of the carriers that have been suppressed.

5. *Multichannel Telegraphy*

In the meantime, many efforts were made to lower the cost of circuits for telegraph channels. Telegraph pulses sent at a rate corresponding to hand-operated keys or to keyboards handling either the Morse code or the 5-unit code, require band widths such that most overland open wire or cable circuits can accommodate several telegraph channels.

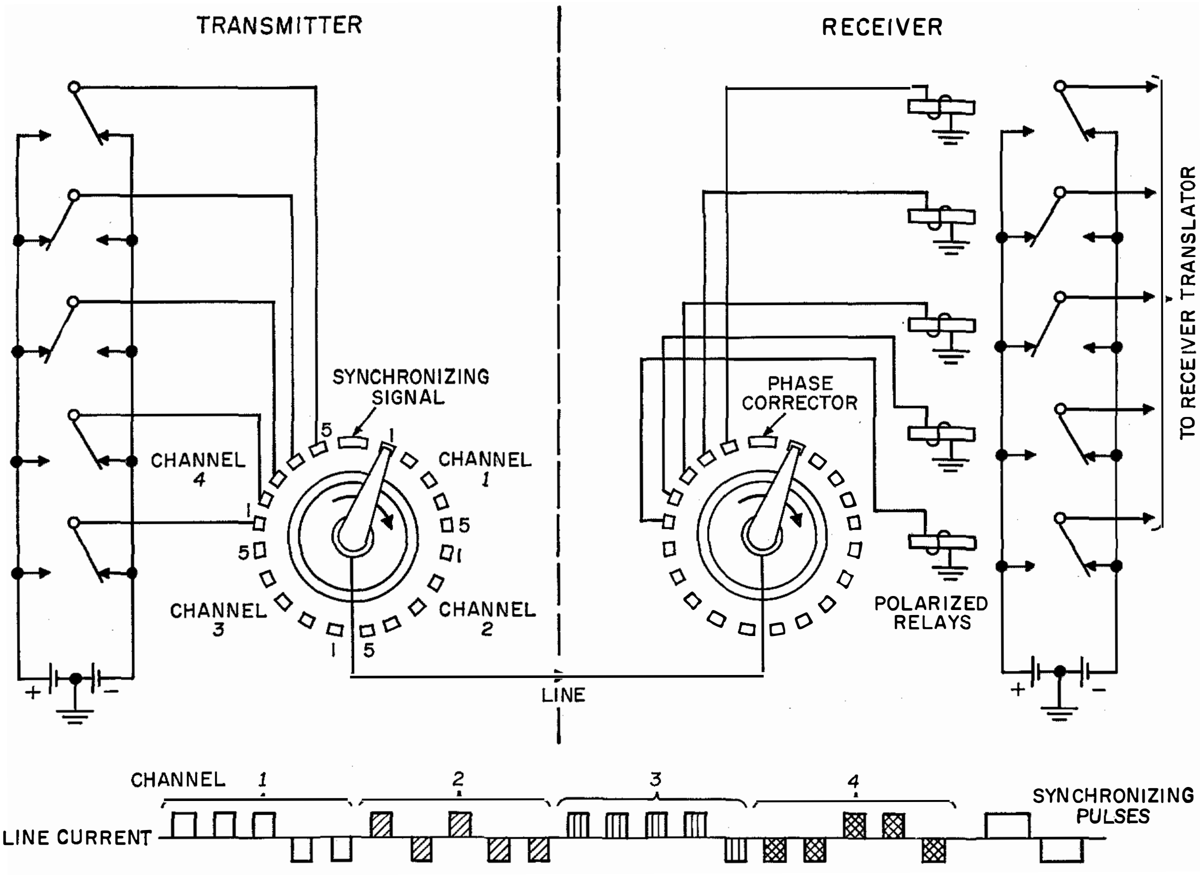

Figure 2—Baudot quadruplex telegraph system. Details are given for only channel 4.

Various systems were developed in consequence; the Baudot multiplex introduced in 1874 is a typical example. The principle used consists in running synchronous distributors at each end of the line and in splitting the line time among several telegraph transmitters and receivers. In the case shown in Figure 2, four 5-unit-code keyboards and four printers operate over a single circuit. This is an interesting and early example of pulse-time multiplexing.

Other methods were used, including the simultaneous handling of telegraph signals and telephone currents over the same circuit by filter separation of the lower frequency bands up to 250 cycles for telegraph from frequencies in the telephone speech band above 350 cycles. This is usually referred to as composite telegraphy. Many precautions had to be taken to prevent the pulses of telegraph current from producing interference in the telephone circuit.

The most successful method for improving circuit efficiency in telegraphy has been to translate the pulses produced by the telegraph transmitters into trains of sinusoidal waves at voice frequencies. If these waves are suitably spaced, for instance 120 cycles apart, one voice-frequency band may be divided into 12 to 24 voice-frequency telegraph channels.

6. *A Failure in Planning*

The picture appears logical and orderly when the analysis is limited to multiplex telegraph transmission by frequency-spaced interrupted tones and to multiplex telephone transmission by frequency-displaced speech bands. In both cases, only low power levels of the order of 10 milliwatts are handled over limited frequency bands. This, however, does not remain the case when connection is made to telephone or telegraph switching equipment, especially with automatic switching.

It must be recognized that whilst the telephone or telegraph transmission engineers saw from the beginning that they were not dealing with individual links, but with extensive networks, on the contrary the switching engineers apparently thought for a long time, and until recently, that their design work ended practically when a few offices were interconnected over a limited area. They did not realize that sooner or later all subscribers, at least in one country, would form a single automatic network and that any subscriber should be able to call automatically any other subscriber.

As a consequence of the limitation in area erroneously accepted, their interest in pulse transmission remained high, because pulses in suitable groups are well adapted to operate selecting mechanisms, particularly those of the early stepping type. These pulses, produced by dial-controlled switches at the rate of approximately 10 per second, are of character and duration quite unrelated in amplitude or frequency to telephone currents and cannot be transmitted over the same frequency band.

Currents used for ringing at frequencies of the order of 20 cycles per second are also unrelated to speech currents, both in frequency and in amplitude. In consequence, a telephone link almost from the start of automatic telephony had to handle dial pulse trains and ringing currents, both at a high power level compared with that of voice, and in an entirely different band of frequencies. Other signals were necessary, as the technique developed, for control of the progress of a call, for supervision, and for actuating the message-recording meters. Most of these were again in the form of pulses or series of pulses.

The difficulties found in designing long-distance telephone systems capable of transmitting this variety of signals together with speech became considerable. Impulses in the infra-acoustic band meant that the circuit should be able to transmit direct current and all frequencies from zero upwards. The ringing currents called for power-handling capacities of the order of 100 times that called for by speech. The powers corresponding to dialing impulses are of the same order.

The difficulties in designing cable circuits, magnetic-core transformers, amplifiers, filters, et cetera capable of handling this range of powers and frequencies were so severe that it was found preferable to avoid them by the admittedly complicated procedure of transforming the signals at both ends of the circuit.

The complications that developed progressively around the various transformations of dialing, ringing, and supervisory signals is hard to imagine. Almost every conceivable arrangement was developed, and what is more serious, was introduced in one or another telephone network. It was found desirable to translate these pulses or low-frequency currents into voice-frequency trains of various characteristics, but of amplitudes comparable to speech currents, transmit them as such over the long-distance circuit and then translate them back to their original form at the end of the circuit.

The order that had been introduced in the planning of the carrier telephone and telegraph systems was progressively lost in this phase of communication development and the amount of equipment used in the transformation of signals into voice frequencies and back to their original forms became high.

An examination of the systems in use reveals approximately 40 different types that are not compatible with each other. In a few cases, the same signals are used in two different networks, but their significance is not the same.

Now that we can look at the past 20 years of telephone development, it is evident that it might have been wiser to recognize from the start that all signals originating or terminating at a telephone subscriber set or telegraph apparatus should have characteristics comparable to telephone speech currents. Alternatively, a unique method of translation at the central office should have been adopted, in order that offices of different types in any network should originate and receive the same voice-frequency signals. The problem of interconnection of offices or networks would then have been limited to the satisfactory transmission of telephone currents. It is quite possible that even now it may be necessary to change our views and come back to what could have been the original concept. Several facts point in this direction.

On the one hand, devices are available today that facilitate the solution to this problem. I have in mind the semiconductor devices such as transistors and the like.

On the other hand, consideration must be given to the probable effect on systems of the introduction of electronic switching. A broad concept in switching can be that of an array of cross points associated with means for selecting a suitable path through this array. The present technique of cross points, that is, metallic contacts, does not call for strict limitation of the power carried through the circuit.

Such is no longer the case with the electronic cross points known today, which utilize gas tubes or semiconductor devices. They are sensitive to overload and, if the power to be handled is limited to speech power, the design problem is greatly facilitated.

Here is a very illuminating situation. At long last, the problem of the switching engineer and that of the transmission engineer come together and their interests converge.

The indications are, in consequence, that the future of infra-acoustic pulse transmission in telephone networks is very poor, in fact efforts continue to be directed towards the complete elimination of such pulses.

This raises a question of the design of future telephone subscriber sets and telegraph apparatus. The telephone set problem is greatly simplified by the introduction of transistors or similar devices. With the very modest power consumption of such elements, one can imagine the generation at the subscriber's set of voice-frequency signals for controlling the selection of the called station and the generation on receipt of a calling signal at voice frequency of a suitable audio signal that will replace the present ringer. Telegraph apparatus similarly can be made to emit and receive voice-frequency signals.

7. *Pulse Modulation*

Let us turn our attention now to an entirely different aspect of pulse techniques applied to communications. So far, we have concentrated on the pulses in the infra-acoustic spectrum, and have pointed out a trend towards the elimination of such pulses from the circuits in favour of audio tones. There is, however, a second type of pulse technique quite different in concept from the first one, namely, that covered by the broad term of pulse modulation.

The second concept is one that may be typified as the opposite of the first one. It calls for the elimination from the line of currents of continuously varying amplitude, including speech currents and their replacement by pulses carrying the information. This is a rather spectacular comeback of the telegraph art, with much shorter pulses however, bringing with it the necessity to restudy and improve the analysis and measurement of transient phenomena as distinct from steady-state conditions.

In line with this concept, an electric signal of varying amplitude is translated into a series of pulses either equally spaced and of variable amplitude, or of constant amplitude with the information being carried by a variation in other characteristics of the pulses, either their width, timing, number, or presence or absence. We see immediately how close we are to the original telegraph signals. For a signal of variable amplitude such as speech, the number of pulses per second necessary to define the waveform without distortion must be at least twice the highest frequency to be transmitted when the methods used involve a continuously variable parameter such as pulse amplitude, width, or time variation. In the case of pulse-amplitude, pulse-width, or pulse-time modulation (also called pulse-position modulation), we need at least 7000 or 8000 pulses per second for a single telephone channel.

8. *Multichannel Operation*

Multiplexing in a multichannel system can be achieved by frequency multiplexing first and pulse modulating the resulting amplitude-modulated band, in which case the number of pulses is again at least twice the highest frequency to be transmitted.

Another method of multiplexing, shown in Figure 3, consists in shortening each pulse considerably for each channel and in sending these in succession, the classical method being to send a series of pulses, one for each channel, during each scanning cycle and then repeat the process. In the example given of one telephone channel with 8000 pulses per second and, say, 12 channels over a single link, the total number of pulses per second will be 96 000.

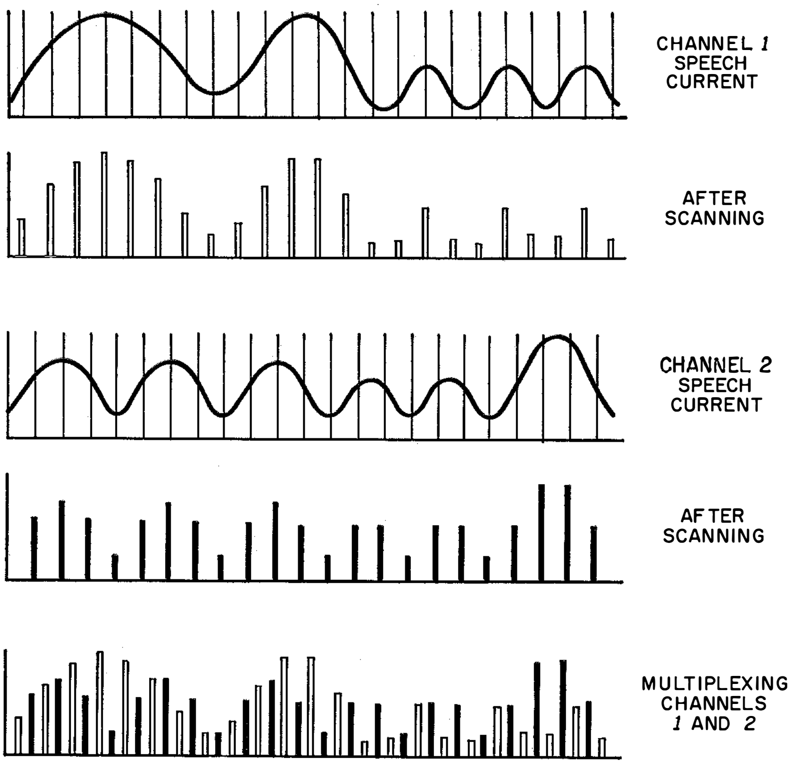

Figure 3—Time-division multiplexing of pulse-amplitude-modulated speech channels.

It will be appreciated that such pulses necessarily must last only a few microseconds. The translation of speech channels into pulses and the reverse, involve a form of synchronous distribution at both ends of the link as indicated in Figure 4. The similarity with the Baudot multiplex telegraph is clear.

It is possible to translate speech signals into pulses of constant amplitude, width, and spacing, the only variable being the presence or absence of pulses; but this requires an even larger number of pulses per second. Because such a process involves discrete steps, it can represent a continuous waveform only to a given approximation.

This method of transmission applied to speech was conceived[29] in 1937 by A. H. Reeves, a member of this Institution. It has been known since as pulse-code modulation. It involves three operations. The scanning at equal time intervals of the waveform to be transmitted. The quantization of the individual amplitudes corresponding to this scanning operation to the nearest value of a finite number of distinct amplitudes. The encoding of these numbers by a suitable system such as on-off keying. The process is shown in Figure 5 and is reversed at the receiving end.

In practice, the number of amplitude steps must be sufficient to limit the distortion due to quantization to acceptable values. This requires frequency bands equal at least to the product of the logarithm of the number of amplitude steps by twice the highest frequency to be transmitted per channel. Taking the example of a single telephone channel and 32 steps of amplitude, the minimum frequency band will be 40 kilocycles per second.

A multiplex system can also be of two types: the resultant waveform produced by frequency multiplexing can be pulse coded or the individual pulses per channel can be made short enough to permit the interlacing of a number of pulses corresponding to several channels in succession. In both cases, the bandwidth required will be multiplied by the number of channels transmitted.

When handling signals or ringing currents by pulse modulation, the same kind of limitations are experienced as with continuous-wave modulation.

---

[29] See bibliography, section 14.

9. *Relative Merits of Pulse Systems and Others*

Having referred to a number of modulation systems, with or without pulses, it is now useful to arrive at some general evaluation of their relative merits. Very thorough studies have been made of this subject by qualified experts. Reference will be made only to one because it is exceptionally complete. This is a paper[14] by C. B. Feldman and W. R. Bennett published in 1949. The analysis of the subject is involved, and only some of the essential points will be covered.

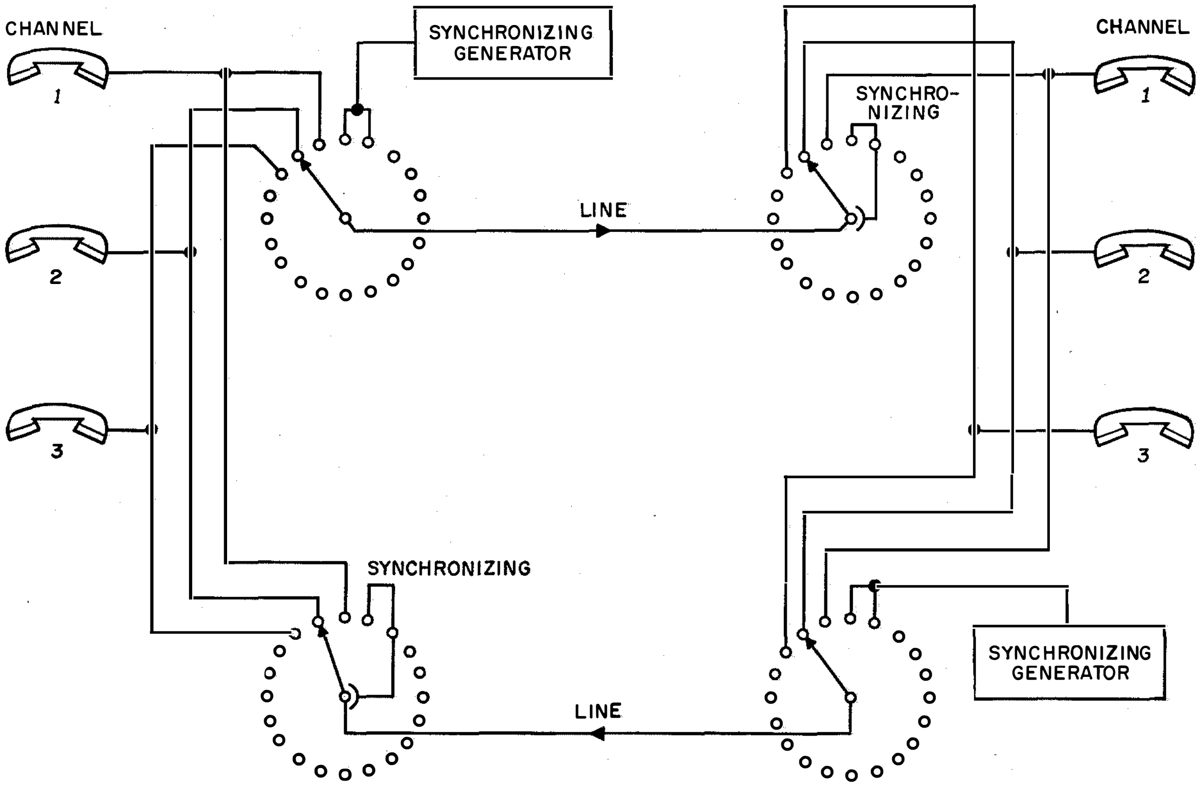

Figure 4—Time-division multiplex for telephony. Each line-connected pair of rotary switches is operated in synchronism under the control of a synchronizing generator. Accessory equipment like hybrid circiuts and low-pass filters for smoothing the pulses into the waveform envelope have been omitted. The terminals of channel 2 are interconnected.

It is generally possible to obtain transmission improvements by increasing the bandwidth per channel, one exception being the single-sideband amplitude-modulated carrier systems in which such advantage cannot be obtained to a marked degree.

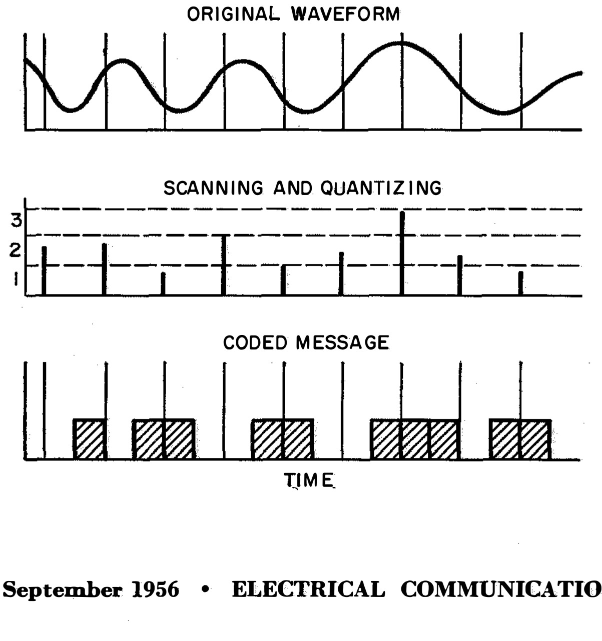

Figure 5—Pulse-code modulation. The momentary value of the waveform being transmitted is quantized at the scanning time intervals into one of four values (0–3). The encoding provides for two pulses, the first position corresponding to 0 or 1 and the second position to 0 or 2. Thus any number from 0 to 3 may be transmitted by the presence or absence of pulses in these two positions.

In all pulse systems, except pulse-amplitude modulation with an amplitude-modulated carrier, one can trade bandwidth against noise or distortion. This is also true of frequency-modulation systems, both in case of frequency modulation of individual channels or frequency modulation of a group of channels.

One important advantage in amplitude-modulated frequency-division multiplex systems is that the peak power to be handled by one common element is only a fraction of the sum of the peak powers of all the individual channels; this is more so as the number of channels increases.

The parallel advantage in time division with pulses of constant amplitude is due to the fact that each channel is capable of full modulation without increasing the load on the common element. In consequence, one can introduce amplitude compression in the input of the system and a corresponding expansion at the output with marked advantage. These devices can be individual per channel or common to all channels.

In comparing the two classes of systems, it is consequently desirable that each be credited with its own intrinsic advantages.

One element in a choice between frequency-division systems and time-division systems is the grade of the circuit to be used. Circuits of poor quality, due either to distortion, noise, or interference, but with wide enough frequency bands, can give better performance with suitable pulse methods than with frequency-division systems.

It does not follow, however, that time-division methods to be justifiably utilized always make use of larger bands than the frequency-division systems. The authors of the article cited above come to the conclusion that when the frequency space necessary to avoid mutual interference between systems is taken into account, certain wide-band methods, less vulnerable to interference, may be as or more efficient in use of frequency space than other narrower-band multiplex methods.

10. Systems Using Pulse Modulation

It will be understood from the above that even with an incomplete understanding of all factors affecting the choice between frequency-division and time-division systems, it was to be expected that radio engineers would be the first to try to derive advantages from the use of time division, because they well knew that their mode of transmission, the radio path, was far from noiseless, distortionless, and stable in characteristics.

A rapid review of the past 30 years will be of interest. In 1924, R. A. Heising described a single-channel pulse-width-modulated telephone system. The purpose, however, at that time was to improve the efficiency of a radio transmitter. R. D. Kell, ten years later, proposed a single-channel system with pulses of constant amplitude and duration but variable in number. The possible improvement in performance due to use of wider bands was visualized.

In 1930, Ullrich, a member of this Institution, Reeves, Clavier, and others, were working on a 9-channel frequency-division multiplex radiotelephone link with amplitude-modulated carrier, which was placed in service between Belfast and Stranraer in 1936. They met difficulties in avoiding excessive cross talk.[30]

It was with the experience of such difficulties well in mind that Reeves in 1932 started tests on an 8-channel pulse radiotelephone link. He had thought that if several telephone channels could not be sent simultaneously with success, one might try to send them successively as amplitude-modulated pulses.

In the years that followed, rapid progress was made in this concept. It was appreciated first that amplitude-modulated pulses were not ideal when used to modulate the amplitude of a carrier especially with regard to the automatic gain control of a link, also that modulation by pulse width was not efficient as the information was carried by the front and the back of the pulses, also that the front and back of the pulses being symmetrical in their displacement with regard to the centre, only one such indication is necessary to carry the information. This is how the concept of pulse-time modulation developed. The publications and patents that followed indicate clearly that the advantages to be derived from the use of a sharp front, with the attendant wide frequency bands, were well understood. It was even hoped for a while that pulse-time-modulated systems would not suffer from progressive deterioration of performance as the number of intermediate repeaters increased.

A better analysis showed, however, that such was not the case. This was the origin of Reeves' interest in what he called then the "step system" of modulation applied to telephony, now pulse-code modulation.

Assuming the use of a binary "on-off" code, we can imagine repeaters capable of retiming, reshaping, and retransmitting pulses exactly in the original form, as long as the repeater is capable of recognizing the presence or absence of a pulse, and as long as the timing can be derived with the required accuracy over a number of incoming pulses.

One could see in this sytem the solution to the problem of transmission over a distorting medium with, if required, many repeaters in the circuit. It should be noted that whilst the performance of the various systems described becomes progressively worse as adverse conditions increase, in the case of pulse-code modulation the performance will remain unaffected much longer until, for a limited further increase of adverse conditions, the system breaks down rapidly.

11. Present Use of Pulse Modulation Systems

These points being understood, a pertinent question is to what extent are such techniques utilized in practice?

The war distracted the attention of research engineers from the problem of telephone multiplex transmission by pulses; at the same time, military interest in radar gave a considerable impetus to techniques of pulse transmission. Many components and circuits especially adapted to pulses became available. The first reappearance of pulse equipments in the field of telephony was the British military set known as the Number *10* set, which was used in Continental Europe after the landings. It was an 8-channel equipment using pulse-time modulation.

After the war, many radio links using pulse multiplex appeared in the field. The interest of their sponsors was in general to arrive at a multiplex system that might be less critical and simpler than its frequency-division multiplex counterpart.

A number of combinations were used, most of them with pulse-time modulation of the voice channels and amplitude modulation of the carrier. The counterpart with pulse-amplitude modulation of the voice channels and frequency modulation of the carrier is also used and appears to gain increasing favour as being more adapted to the use of instantaneous compandors and more economical of bandwidth than its counterpart.

As expected, the designers found the above pulse systems to be less critical in link requirements than comparable frequency-division systems. The systems will accept greater length of antenna transmission lines, more phase distortion, more amplitude distortion, and poorer impedance adaptation of line to antenna than frequency-division systems using minimum bandwidth for equal results.

Fading may be minimized, particularly on paths over water, by the use of diversity reception simply by paralleling the automatic gain control and the output of the two receivers. In frequency-division systems, it appears necessary to measure the two levels and to commutate at high speed from one receiver to the other.

An important point in network planning is that the channel grouping of a frequency-division system is usually the same as used on cable or open wire carrier systems. The interconnection can be made at carrier frequency. Such is not the case in many pulse-modulation systems starting at voice frequency. It is then necessary to interconnect the systems after demodulation of the channels.

Pulse-code-modulation systems, whilst having attracted a great deal of attention in the research laboratories, have not yet been used to my knowledge on commercial radio links. The reason probably is that the advantages to be derived are greater as the distance increases and most pulse

TABLE 1

PULSE MULTIPLEX RADIO LINKS IN OPERATION

Countries	Terminals or Repeaters	Route Miles	Channel Miles
United States and Mexico	330	8 246	89 120
Germany	126	2 340	54 000
Greece	34	1 250	15 500
Austria	17	282	5 805
Australia	16	241	5 543
Canada	15	244	7 962
Belgium	14	225	8 800
Spain	2	25	680
Switzerland	2	8	96
Total	556	12 861	187 506

links have not been engineered for very long distances.

Table 1 gives the results of a survey I made of the extent to which such systems are in commercial use today. It will be appreciated that the figures represent a minimum as it is probable that a number of existing links did not come to my attention.

Many more radio links of this type are in the process of being ordered or already in construction. A minimum figure of another 100 terminals or repeaters and 50 000 channel miles can be quoted safely. Whilst the largest proportion will be found in the United States, Belgium is probably next with about 13 600 channel miles, Spain and Germany next each with 9000 channel miles, and Austria with 4500 channel miles.

12. Submarine Cables and Waveguides

Before leaving this subject, references should be made to two more methods of transmission that although usually considered separately have points in common. They are long-distance submarine cables and waveguides.

The history of long-distance submarine cables is most fascinating. Many members of this Institution know it well. Great names in British science are associated with the progress of submarine telegraphy.

The long-distance submarine cable is electrically a single metallic conductor of high resistance, surrounded by a lossy insulator, and having high capacitance to the return path. Such cables until recently were without repeaters, the transmission losses being compensated to the extent possible at the end of the cable.

The effect of the characteristics of a long-distance cable is that a square clear pulse applied at one end of the cable arrives at the other end as a highly attenuated rounded-off minute increase in cable current that, after the introduction of the syphon recorder by Lord Kelvin in 1867, was reproduced as an uncertain wavy line on the recording paper. An example is shown in Figure 6.

Experts were trained to decipher this wavy line. The code most frequently used was a binary code of equally spaced positive or negative pulses transmitted at the rate of a few per second. The reader had to recognize in the variations of the line, the recurrent spacing of the signals and which were positive or negative. The message was written in clear language by the operator on another paper. Later on, this function was performed by electronic equipments.

The waveguide, still in the experimental stage, has a property in common with the submarine cable in that if a square pulse is applied at one end, it will also arrive at the distant end highly attenuated and rounded off. The reasons are different however.

An analysis of the electric phenomena present in a round metallic tube with signals propagated as circular electric waves has been given[24] by S. E. Miller in his 1954 paper.

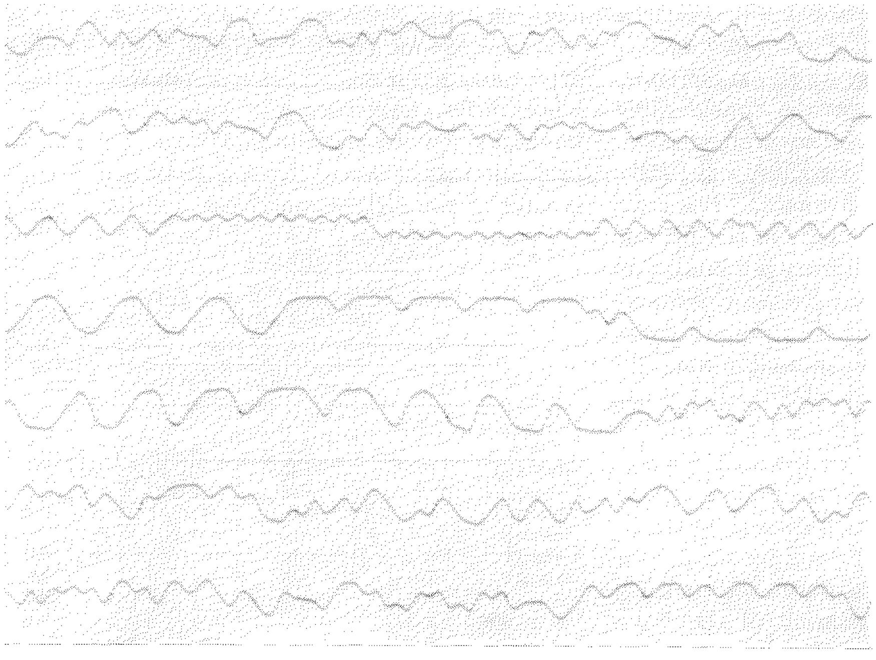

Figure 6—Signals recorded at a terminal of the Brest-Dakar submarine cable.

With circular waves, the attenuation decreases as frequency increases. This makes the mode of propagation most attractive for long-distance communication. Signals are distorted however, due principally to the transfer of the energy in the circular wave to other waves, as a result of minute imperfections in the waveguide, and after a time delay some of this energy is transformed back to the original wave. This results in a large interference with the original signal.

Whilst this difficulty can be minimized, it remains a serious obstacle to the usual methods of transmission, which are sensitive to such interference. In consequence, the type of modulation likely to be used in these waveguides, according to the author, is pulse-code modulation, as it makes it possible to regenerate the signal at each repeater.

To give a few orders of magnitude found in the paper: with a pipe of 2-inch (51-millimeter) diameter, the attenuation is of the order of 2 decibels per mile (1.24 decibels per kilometer) using a carrier frequency of 50 000 megacycles per second. Repeater spacing of 25 miles is considered. The frequency band that might be exploited covers 35 000 to 75 000 megacycles per second. A base bandwidth of 500 megacycles per second is mentioned.

In other publications, it is indicated that over such waveguides tens of thousands of telephone channels along with hundreds of television programmes can be transmitted.

Assuming, for instance, the existing combination now used on long-distance coaxial cables in the United States of 900 telephone channels and one television channel over an 8-megacycle-per-second band, the transmission of such a spectrum by pulse-code modulation with 128 levels will require $8 \times 2 \times 7$ or 112 million pulses per second. This means pulses of a few millimicroseconds duration and might require in practice a frequency band of 200 megacycles per second. In view of probable difficulties in equalization, these channels may have to be transmitted over separate carriers on a frequency-multiplex basis, with base bands of the order of 500 megacycles per second, which would permit the transmission of 80 such channels, that is, approximately 12 times the channel-carrying capacity of our present type of multicore coaxial cable.

13. Conclusion

It will be clear from this last example that one may be driven for valid reasons to a triple combination of frequency division, time division, and back again to frequency division. It illustrates what this lecture intends to convey. There is no simple rule in selecting the field of application of these systems, one or the other may be justified economically depending on the characteristics of the transmission path and conditions to be met. It may be advantageous to combine systems.

It is probable that the engineers who continue to develop our transmission systems will find it desirable to keep their minds fully open to the benefits that can be derived from each system and be sufficiently conversant with both principles to recommend one or the other, or both in combination, depending only on a realistic appraisal of the problem.

14. Bibliography

1. W. R. Bennett, "Noise in PCM Systems," *Bell Laboratories Record*, volume 26, pages 495–499; December, 1948.
2. H. S. Black, "Stabilized Feedback Amplifiers," *Bell System Technical Journal*, volume 13, pages 1–18; January, 1934.
3. H. S. Black, "Pulse Code Modulation," *Bell Laboratories Record*, volume 25, pages 265–269; July, 1947.
4. W. P. Boothroyd and E. M. Creamer, Jr., "Time-Division Multiplexing System," *Transactions of the American Institute of Electrical Engineers*, volume 68, part 1, pages 92–97; 1949: also, *Electrical Engineering*, volume 68, pages 583–588; July, 1949.
5. A. G. Clavier, D. D. Grieg, and P. F. Panter, "PCM Distortion Analysis," *Electrical Engineering*, volume 66, pages 1110–1122; November, 1947.
6. A. G. Clavier, P. F. Panter, and W. Dite, "Signal-to-Noise Improvement in a Pulse-Count-Modulation System," *Proceedings of the IRE*, volume 37, pages 355–359; April, 1949: also, *Electrical Communication*, volume 26, pages 257–262; September, 1949.
7. E. M. Deloraine and E. Labin, "Pulse Time Modulation," *Electrical Communication*, volume 22, number 2, pages 91–98; 1944: errata, volume 22, number 3, page 202; 1945.

8. E. M. Deloraine, "Pulse Modulation," *Proceedings of the IRE*, volume 37, pages 702–705; June, 1949: also, *Electrical Communication*, volume 26, pages 222–227; September, 1949.
9. H. Dudley, "Synthesizing Speech," *Bell Laboratories Record*, volume 15, pages 98–102; December, 1936.
10. H. Dudley, "The Vocoder," *Bell Laboratories Record*, volume 18, pages 122–126; December, 1939.
11. H. Dudley, "Remaking Speech," *Journal of the Acoustical Society of America*, volume 11, pages 169–177; October, 1939.
12. C. C. Eaglesfield, "Electrical Pulse Code Modulation Systems of Communication," British Patent 653 043; August 22, 1951: also, United States Patent 2 678 350; May 11, 1954.
13. C. W. Earp, "Recent Development in Communication Technique," *Proceedings of the Institution of Electrical Engineers*, volume 99, part 3, pages 181–186; July, 1952: also, *Electrical Communication*, volume 30, pages 61–70; March, 1953.
14. C. B. Feldman and W. R. Bennett, "Band Width and Transmission Performance," *Bell System Technical Journal*, volume 28, pages 490–595; July, 1949.
15. J. E. Flood, "Crosstalk in Time-Division Multiplex Communication Systems Using Pulse-Position and Pulse-Length Modulation," Institution of Electrical Engineers Monograph 19; *Proceedings of the Institution of Electrical Engineers*, volume 99, part 4, pages 64–73; April, 1952.
16. J. E. Flood, "Time Division Multiplex Systems," *Electronic Engineering*, volume 25: pages 2–5; January: pages 58–63; February: pages 101–106; March: pages 146–150; April: 1953.
17. W. M. Goodall, "Telephony by Pulse-Code Modulation," *Bell System Technical Journal*, volume 26, pages 395–409; July, 1947.
18. W. M. Goodall, "Television by Pulse-Code Modulation," *Bell System Technical Journal*, volume 30, pages 33–49; January, 1951.
19. D. D. Grieg and A. M. Levine, "Pulse-Time Modulated Multiplex Radio Relay System—Terminal Equipment," *Electrical Communication*, volume 23, pages 159–178; June, 1946.
20. D. D. Grieg and H. Gallay, "Pulse-Time Modulated Multiplex Radio Relay System—Radio-Frequency Equipment," *Electrical Communication*, volume 24, pages 141–158; June, 1947.
21. D. D. Grieg, "Pulse-Count Modulation," *Electrical Communication*, volume 24, pages 287–296; September, 1947.
22. W. Jackson, "Communication Theory," Butterworth Scientific Publications, London, England; 1953: See, Z. Jelonek, "Comparison of Transmission Systems," pages 44–81.
23. V. D. Landon, "Theoretical Analysis of Various Systems of Multiplex Transmission," *RCA Review*, volume 9, pages 287–351 and 433–482; June and September, 1948.
24. S. E. Miller, "Waveguide as Communication Medium," *Bell System Technical Journal*, volume 33, pages 1209–1265; November, 1954.
25. S. Moskowitz and D. D. Grieg, "Noise-Suppression Characteristics of Pulse Modulation," presented before the Institute of Radio Engineers 1947 National Convention: Summary appears in *Electrical Communication*, volume 24, pages 271–272; June, 1947.
26. B. M. Oliver, J. R. Pierce, and C. E. Shannon, "The Philosophy of PCM," *Proceedings of the IRE*, volume 36, pages 1324–1331; November, 1948.
27. A. J. Oxford, "Pulse Code Modulation Systems," *Journal of the British Institution of Radio Engineers*, volume 13, pages 265–272; May, 1953.
28. W. C. Peterman and A. Minc, "Four/Two-Channel Time-Division-Multiplex Telegraph System for Long-Distance Radio Circuits," *Electrical Communication*, volume 28, pages 127–141; June, 1951: also, *Transactions of the American Institute of Electrical Engineers*, volume 70, pages 362–372; 1951.
29. A. H. Reeves, "Electric Signaling System," French Patent 852 183; October, 1938: also, United States Patent 2 272 070; February 3, 1942.
30. E. H. Ullrich, "Ultra-Short Wave Communication," *Electrical Communication*, volume 16, pages 64–86; July, 1937: see page 76.
31. N. H. Young, "Pulse-Time-Modulation Link for Army Field Telephone System," *Electrical Communication*, volume 24, pages 297–299; September, 1947.

Principles of 7E Rotary Telephone Switching System

By MARTINUS DEN HERTOG
Bell Telephone Manufacturing Company; Antwerp, Belgium
and
JAKOB KRUITHOF
International Standard Electric Corporation; Antwerp, Belgium

ELECTRONIC METHODS are being introduced extensively into many branches of engineering that previously relied solely on mechanical and electromechanical designs. The electronic methods offer desirable improvements at lower cost than redesign of the former equipment would provide.

In contrast to the electromechanical designs, the electronic apparatus being less subject to wear does not require as much maintenance for replacement and adjustment, is more accurate and faster in operation, and for certain problems offers solutions that were not available previously. Designers of machine switching systems for telephone networks have become highly conscious of these important features.

The *7E* rotary system offers electronic control of both the switching apparatus and the subscriber's line circuit, providing important economies in exchange equipment, improved performance, and useful additional operating facilities.

The initial development of this advanced system occurred between 1941 and 1945 and in the intervening decade it has been subjected to extensive and severe field testing.

In 1947, the private automatic branch exchange serving the main factory of the Bell Telephone Manufacturing Company in Antwerp was converted to *7E* design. It serves 800 extensions, 20 city junctions, and 10 tie lines to another private exchange. It is comparable to a public exchange except for the absence of operators' and junction equipment.

Extensive measurements and tests were made under regular service conditions to determine the reliability, operating speed, quality of transmission, crosstalk and noise, and need for maintenance. The usual short- and long-term variations in temperature and humidity were encountered. The system operated satisfactorily in all respects and practically no maintenance has been required to date since 1947 when it was placed in service.

The evidence produced by this Antwerp installation induced the Dutch Telephone Administration to install this system for the 400-line private branch exchange serving its own workshop at The Hague. That installation in turn stimulated a bulk order for 40 000 lines for The Hague and Haarlem. Some 12 000 lines are now in use in the Scheveningen summer resort that is part of The Hague area. Two views of this exchange are shown in Figures 1 and 2. It operates on a fully automatic basis with existing *7A* exchanges in the local area and with the *7D* toll exchange of that district, through which automatic connections are available to subscribers throughout the country.

In course of manufacture are a 9000-line exchange for Breda, with which a *7E* toll exchange is associated to interconnect about 920 incoming and outgoing rural and toll lines; two offices of 3000 and 10 000 lines for the Haarlem area; and new 20 200-line equipment for the Marnix exchange; 13 200 lines for the Bezuidenhout exchange; 8000 lines for the Rijswijk exchange; all of which form parts of the area of The Hague. Additional orders have been received for an 8000-line office for s'Hertogenbosch including an automatic toll exchange and for a new automatic toll exchange in The Hague area.

The Swiss Telephone Administration has installed *7E* equipment for expanding the Zurich toll exchange. This was the first and is one of the largest automatic toll exchanges in the world. It now serves over 2200 toll lines and its capacity is to be tripled by the addition of *7E* apparatus. An economy in equipment resulting in a saving of about 20 percent in floor space will be obtained together with improved performance and operating facilities.

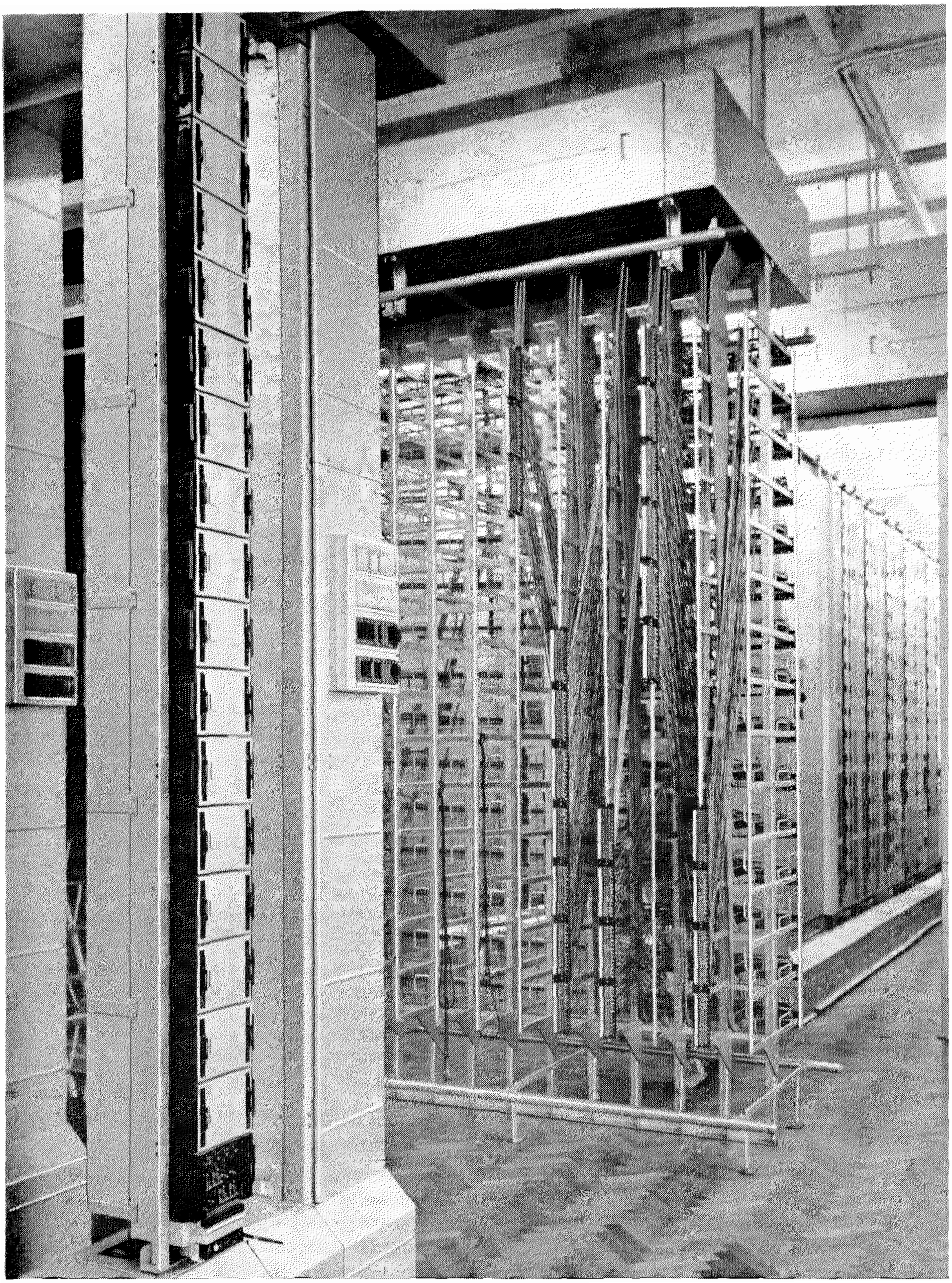

Figure 1—View of switch room and circuit-distributing frame in *7E* exchange in Scheveningen, near The Hague.

In the Lima area, Peru has placed an order for a 5000-line exchange called San Isidro and Mexico will obtain four exchanges totaling 23 000 lines.

In the following description of the system, the principles and their application to local exchanges will be given first and toll services will be treated thereafter.

1. *Principles of Design*

In the *7E* system, speech connections are made mechanically through 100-point power-driven rotary finder switches that have demonstrated their effectiveness over the years. Dialed numbers are stored in registers that supervise the search for the desired line or junction.

The electronic equipment that controls the searching is concentrated at the registers and, because of the rapidity with which it operates, only a relatively small number of these units are needed. The registers perform several functions that in previous designs were handled by line-finder or selector equipment, with corresponding simplification of that apparatus.

The subscriber's line and cutoff relays have been replaced with static apparatus that can be housed in a small plug that is inserted for each working line in the test-jack strip on the horizontal side of the main distributing frame. The

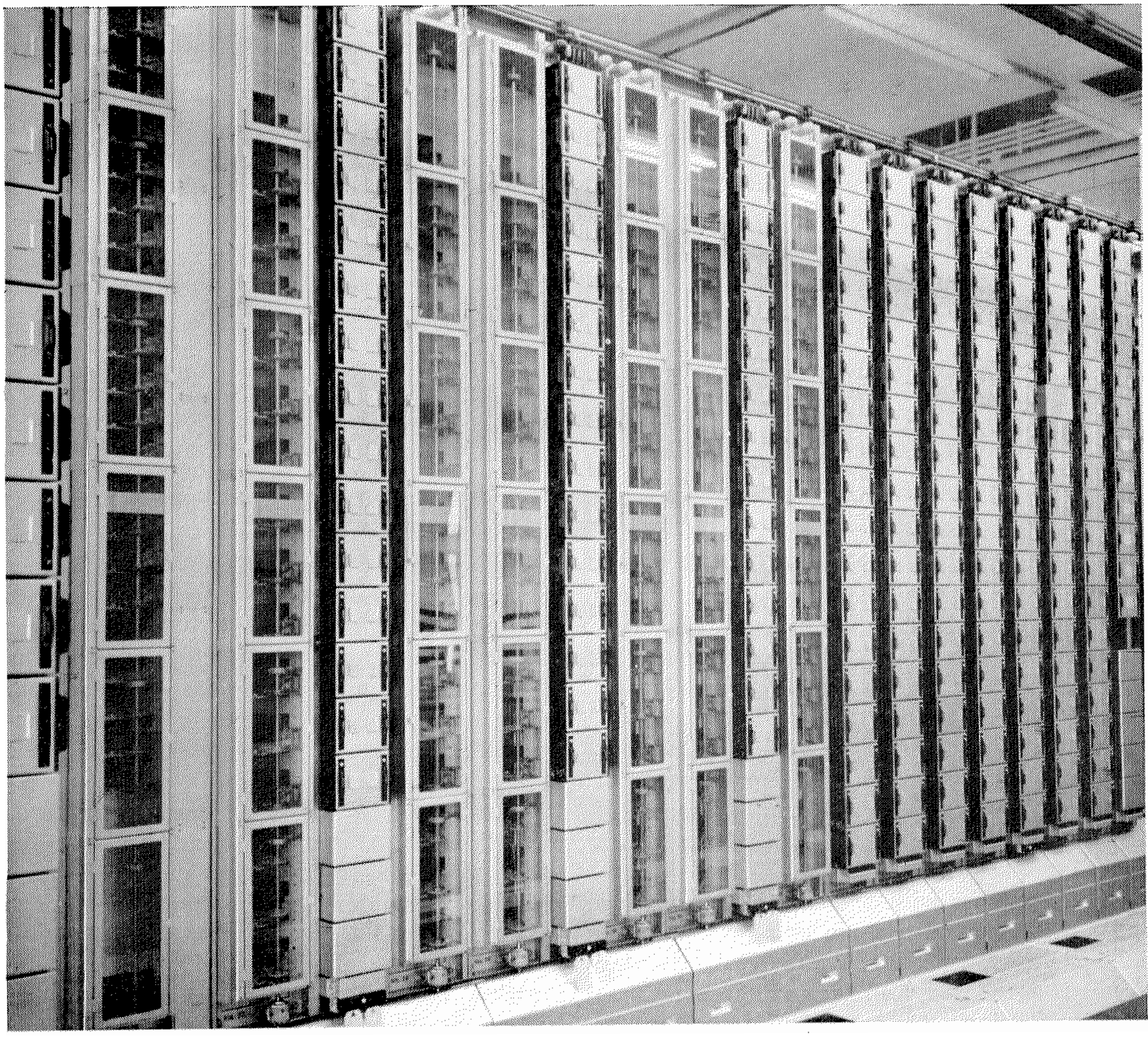

Figure 2—Front view of a typical switchrack in the *7E* exchange in Scheveningen.

class of service for each subscriber is controlled by the elements within the plug and changes can be made simply by replacing one type of plug with another.

The electrical contacts are of good quality and switch noise is comparable to that of systems employing switches with precious-metal contacts.

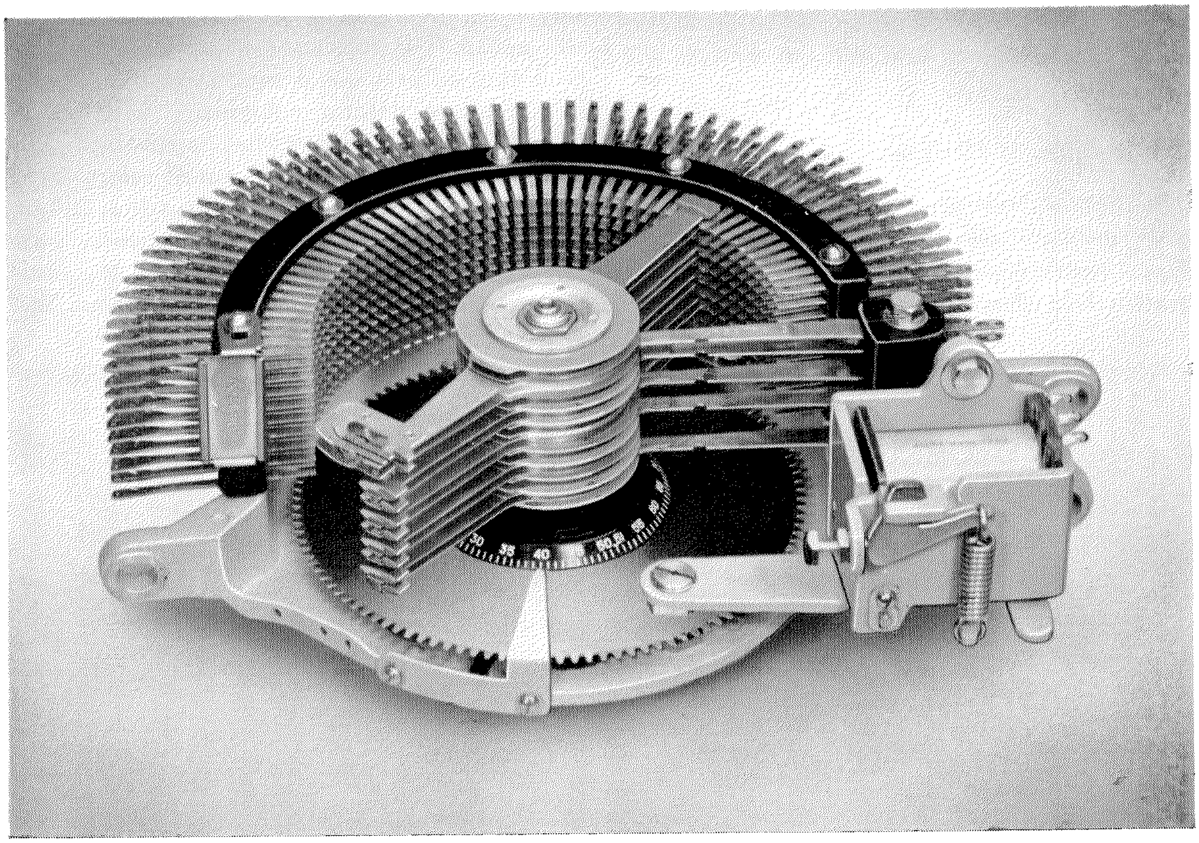

Figure 3—The 100-point rotary finder is the principal switching element of the *7E* automatic telephone system.

The rotary switch shown in Figure 3 carries the speech circuits. Tested in exchanges for over a quarter of a century, the switch has been improved to operate at 60 terminals per second, which is slightly higher than previous models and has a new position indicator that permits easier identification of the position of the wipers. The use of this switch under electronic control of the registers provides an over-all speed of selection equal to or higher than that of direct switching systems.

These switches with 5 double-ended brushes and 100 sets of outlets are employed both as line-finders and selectors. A universal two-relay circuit is associated with each switch regardless of whether it is used as a line-finder, group selector, or final selector.

Use is made of relays of the *U* and *Y* types developed by Bell Telephone Laboratories (United States) or others derived from these designs. In some positions, the high-speed sigma and sensitive gamma relays are employed. All relays are mounted in completely enclosed dust-proof jack-in units to provide flexibility and ease of maintenance.

Several novel equipment and wiring methods have been introduced and include the use of folded sheet iron for the finder and relay bays, completely shielded bases on the switch racks for housing the horizontal main shafting and all intrarack cabling, elimination of all intermediate uprights on the switch racks, the optional elimination of cable runs above the switch racks, easily removable switch-rack motors, new

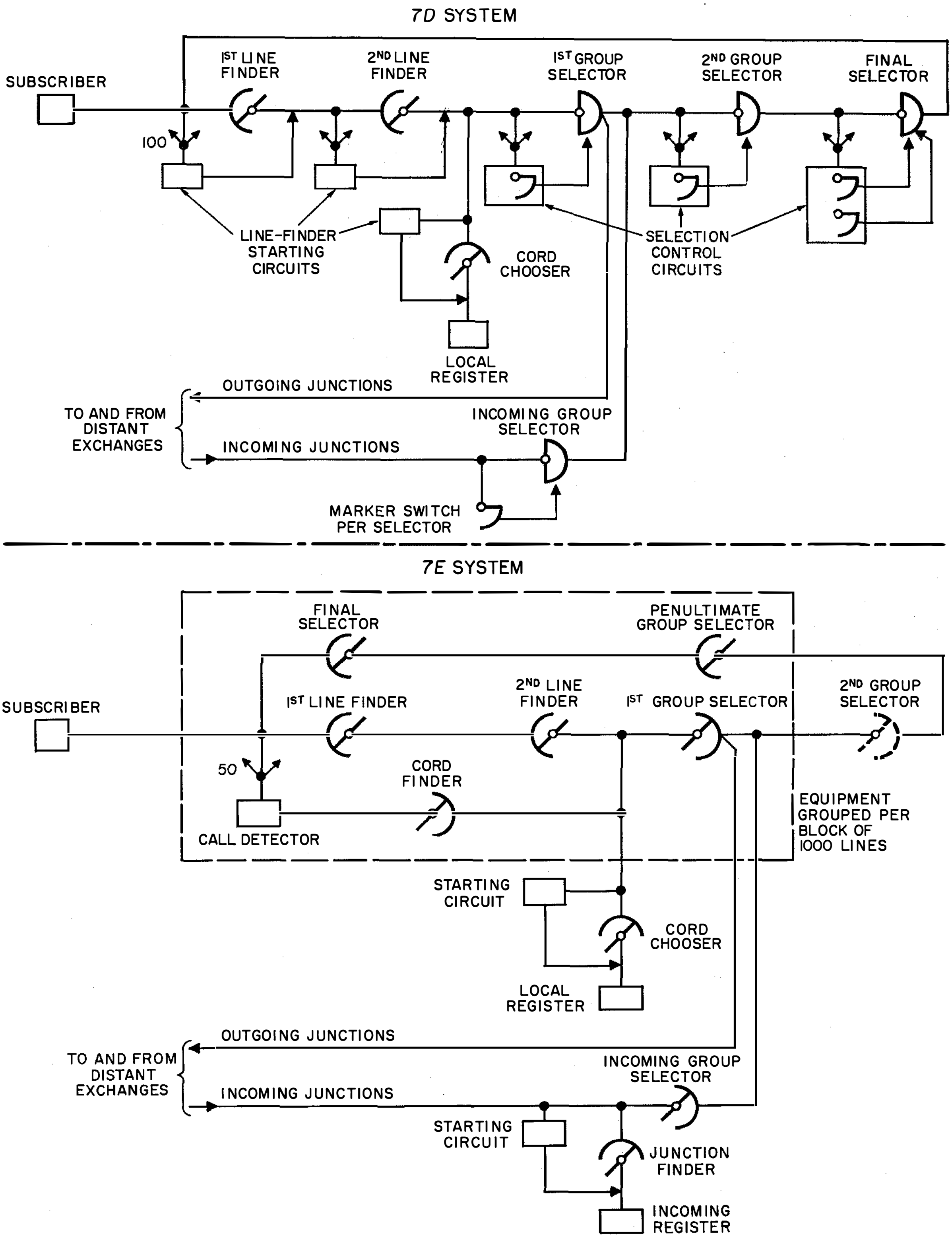

Figure 4—Comparison of junction diagrams of the *7D* and *7E* systems.

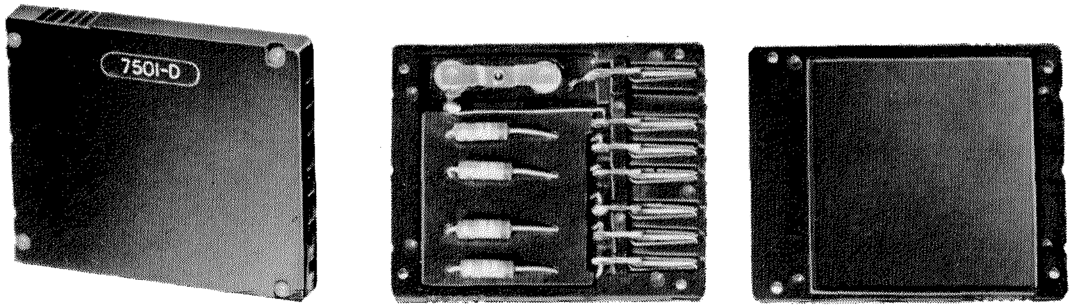

Figure 5—Subscriber's line plug. The values of the four resistors and the metallic rectifier establish the class of line, which may be changed by substituting a different plug.

multiple grading methods, and improved jumpering facilities.

The general switching and trunking principles are similar to those of existing rotary systems, which is evident from Figure 4. Both the *7D* and *7E* systems employ 100-outlet rotary switches driven by motors common to several switches for line finding and final selection. Both systems use two line-finder stages to connect a subscriber to a cord circuit and its associated first group selector, and a third finder stage to connect the cord circuit to a free register. The dialed impulses are stored in the register, which supervises the selecting process that extends the connection to the called station.

There are certain important differences in the two systems. It will be noted from Figure 4 that in the *7D* system each group of line finders and selectors has its own common control equipment, but that the *7E* system omits the starting circuits for the first and second line finders and the control circuits that include common marking multiples for the selectors. A call-detector circuit and its cord finder are used in the *7E* but not in the *7D* system. Some of the differences in operating principles in the two systems will be discussed.

2. *Subscriber's Line Circuit*

2.1 Description

By using electronic methods, the two relays normally found in each subscriber's line have been replaced by a circuit consisting of four composition resistors and a miniature metallic rectifier having an active surface of only 1 square millimeter (0.002 square inch). They are mounted compactly in a plug-in unit shown in Figure 5. The substitution of simple static equipment not subject to wear and needing virtually no maintenance for 20 000 relays in a 10 000-line exchange is of major importance. Line relays make up about a quarter of all the relays in a *7D* exchange.

The line circuits for the *7D* and *7E* systems are shown in Figure 6. The subscriber's line circuit appears in the center of each drawing and is connected to the left to the multiple of the final selectors and to the right to the multiple of the line finders serving the group to which the particular subscriber's line belongs. Three conductors of the *7D* subscriber's line circuit and four in the *7E* system are multipled over the line-finder and final-selector switches, which in both cases have 5 brushes. The remaining conductors are multipled separately over the line finders on the one hand and over the final selectors on the other hand. In the *7E* line circuit, the 4th conductor may be connected either to earth or to battery via a resistor, the value of resistance determining the class of line in accordance with the table given in Figure 6. The reduction in equipment for each subscriber's line in the *7E* system is evident from the figure.

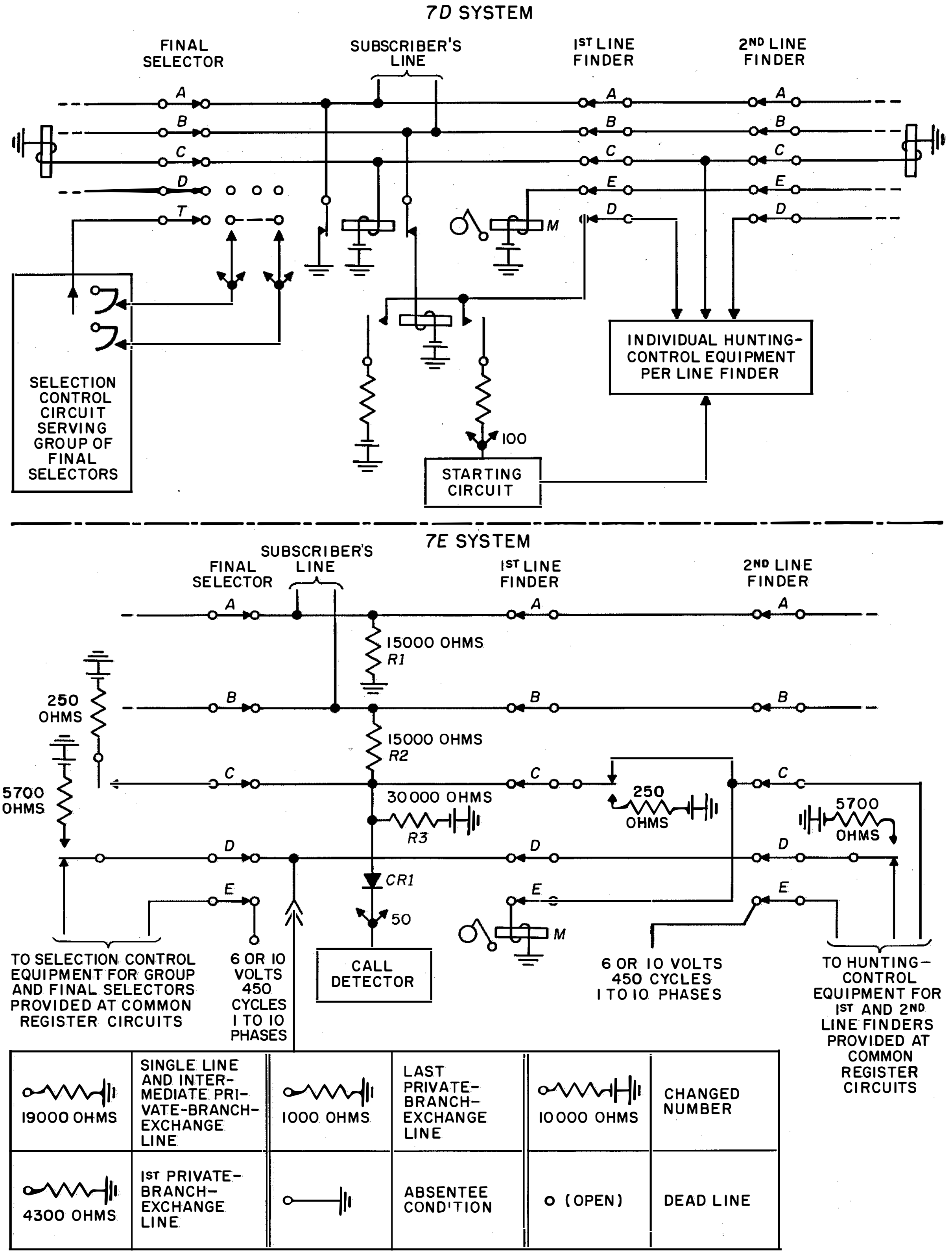

Figure 6—Subscriber's line circuits for both *7D* and *7E* systems.

The 5 components of each subscriber's line are the small metallic rectifier *CR1*, 2 resistors *R1* and *R2* of 15 000 ohms each, *R3* of 30 000 ohms, and the resistor of one of the values given in the table in Figure 6 corresponding to the class of service. All 5 components are mounted in a flat bakelite housing 50 by 50 by 8 millimeters (2 by 2 by $\frac{5}{16}$ inch) in size. A set of 7 small double-contact jacks permit it to be plugged onto a set of corresponding pins of a line circuit on the line-jack strip mounted on the horizontal side of the main distributing frame as shown in Figures 5 and 7. The placement of all of the subscriber's line apparatus on the horizontal side of the main distributing frame permits a substantial saving in floor space.

2.2 LINE PLUGS SET CLASS OF LINE

As indicated in the table in Figure 6, the choice of resistance and whether it is connected to battery or ground determines the class of line. If a line is not to have access to automatic toll calls, a second rectifier may be inserted in the *C* lead. This rectifier, also, is mounted in the subscriber's plug. This restriction will apply for single lines and for those connected through private branch exchanges.

For convenience, differently colored bakelite housings are used to identify the various classes of lines, which may be changed simply by replacing one line plug with another corresponding to the class desired.

The absence of a line plug characterizes that line as a "dead line" when the automatic equipment attempts to engage it for a call. There is no necessity of jumpering such lines to dead-line circuits and calls to them are automatically re-

Figure 7—Main distributing frame showing mounting of line-jack strips

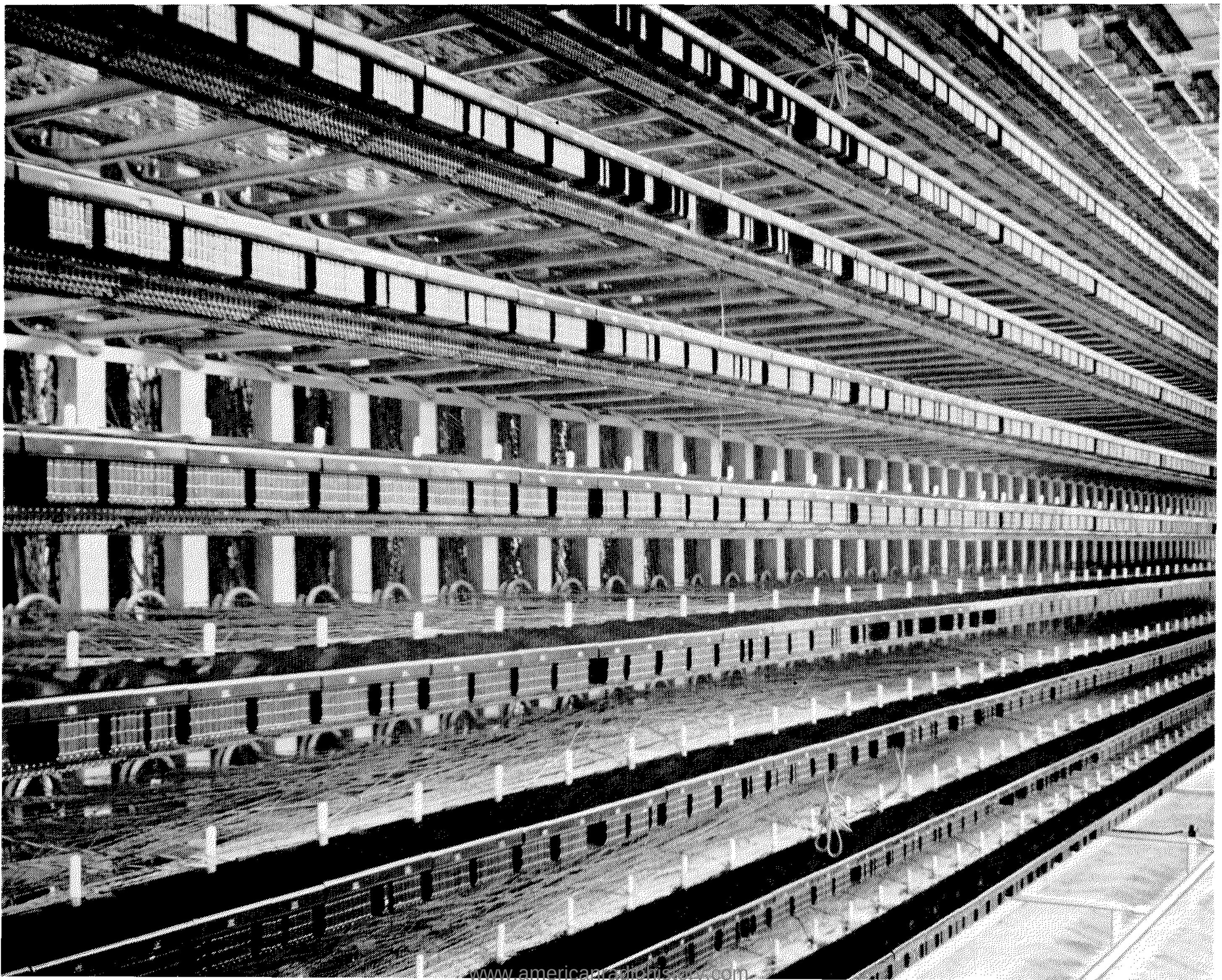

routed to an operator's position or to a dead-line-circuit, a small number of which are accessible via special-service selectors. Only working lines need plugs.

It is a simple matter to mark a group of lines as belonging to a private branch exchange. The first line, which has the directory number, gets a "first private-branch-exchange plug" and the final number is marked by a "last private-branch-exchange plug." The intervening lines have regular single-line plugs. The first and last lines being specially characterized, the final selector will hunt over the entire intervening group of lines if the first line is busy until a free line is found or it reaches the last line, at which the hunting action will stop irrespective of whether the last line is free or busy. If it is occupied, a busy tone will be connected. The size of a private-branch-exchange group is varied simply by shifting the last-line plug to the new position and filling the intermediate positions with single-line plugs.

If a subscriber is to be absent for a relatively long period, a suitable plug will place the line in the "long-period absentee" class. Calls to the number will automatically go to the "absentee operator" who will give a prearranged message. When the subscriber returns, a call from this line will also go directly to the absentee operator, who will arrange to have the status of the line returned to its original class.

Lines on which service has been discontinued or which are idle because of a change in number are provided with a "changed number" plug that connects the call to a special operator.

Subscribers who fail to pay their bills may receive restricted service that permits calls to be received but not originated, again by a simple change of line plug.

The subscriber's line plug provides complete control of these line classes. No jumpering or connection of equipment is needed. When calls are rerouted to a special operator, all selector and junction equipment involved in the connection to the called line is released immediately.

3. Selection

3.1 PRINCIPLES

Single-motion selectors offer certain advantages over two-motion selectors. Mechanically, they are simpler and easier to maintain. From a switching point of view they provide greater flexibility since the outlets are not divided rigidly into, say, 10 levels of 10 outlets each as is usually the case. The purely sequential arrangement of outlets permits any desirable grouping, with no limitation on the number of outlets in each group.

The chief disadvantage of single-motion selectors as used in previous systems of this type is that the electrical control of the positioning of the contact brushes is not so easily accomplished as for the two-motion selectors. A marker switch is employed to supervise the positioning of the selector switch on the basis of the numerical information received from the register. In some cases, the marker switch takes the form of a set of relays.

The marker switch, acting on the numerical information received from the register, changes the electrical conditions or marks one of the conductors to the appropriate outlet on the single-motion switch to stop it at that outlet. In certain applications, marker switches are provided individually for each selector but more often it is part of a control circuit that is common to a number of selectors. The associated marking wires are multipled over all the selectors in the group served and constitute the so-called common marking multiple.

The necessity of providing marker switches to control the single-motion selectors in these previous systems adds to the initial cost of the exchange and to the maintenance program. An inherent disadvantage in the use of common control circuits is that only one of the selectors in the group can operate at a time; from a traffic viewpoint these selectors are to a certain degree interdependent.

A practical and reliable solution to the positioning of the single-motion selector switch directly from the register and without the interposition of auxiliary equipment has been introduced in the *7E* system. The advantages of simple design and of flexibility of application that characterize the single-motion switch is now combined with the mutual independence and direct control of the two-motion switch.

The direct-control method used in the *7E* system is called "multipotential comparator control." There are a number of variations of it.

The particular form employed is based on the exclusive use of cold-cathode tubes. This avoids the large standby powers that would be required for hot-cathode tubes and their relatively short duty life in this type of service.

Another feature is that the numerical information from the register need not be transmitted as a train of pulses that must be counted in some manner. Such counting takes a relatively long time and introduces possible errors. Selection time is reduced to about a third of that previously required. Under normal operating conditions, less than 1 second elapses between the moment dialing is completed and ringing starts on the called line.

A selector, when being positioned by a register, simply hunts until it reaches a free outlet of the wanted group, where it stops. It ignores all free outlets in other groups and combines the selecting and hunting functions of the two-motion switches into a smooth single-motion operation.

For each group of outlets, the test lead of each free outlet of a switch is characterized by a potential that differs from that on the free outlets of all other groups. This potential is supplied through the selector circuit in the next switching stage when it is free. Thus, selection control is reduced to providing an arrangement whereby a selector hunts until it finds the wanted potential pattern and then stops. All other potentials or the absence of potentials on busy outlets are ignored. It is evident that there being no trains of pulses involved, incorrect transmission or reception of a specified number of pulses cannot occur.

The potentials appearing on the test leads of the outlets are compared electronically with a reference potential that is identical to the wanted potential. The electronic comparator is in the register. The digits stored in the register select the reference potential and this is connected to one input of the comparator. The other input is connected to the brush that makes contact with the test terminals on the selector switch. When the two inputs to the comparator are identical, the selector switch drive is interrupted and the switch stops hunting.

The comparison between the potential on the outlet and the reference potential is repeated again after the switch is stopped. If either potential does not correspond to the other, the selector switch will immediately resume its hunting until it finds the desired potential.

3.2 Characteristic Potentials

The system or pattern of potentials is based on a 450-cycle-per-second alternating voltage. There are two amplitudes used, one of 6 and the other of 10 root-mean-square volts. For each of these two amplitudes, there are 12 phases at 30-degree intervals. There are, therefore, 24 potential patterns that differ in amplitude or in phase from each other.

3.3 Sources of Characteristic Potentials

The primary source of all 24 characteristic potentials is a common 3-phase 450-cycle generator producing 10 volts between each phase and ground.

Potentials having 12 different phases are obtained from two 3-phase transformers, one of the primaries of which is connected in star and the other in delta. Of course, three single-phase transformers could be substituted for each three-phase unit. The secondaries are tapped to provide both 10 and 6 volts at each phase and to provide two sources with phases 180 degrees apart. This simple, reliable, and inexpensive potential generator is common to the entire exchange.

3.4 Comparator

It is evident from the foregoing that the positioning of the selector is determined exclusively by the instantaneous condition of the apparatus at the moment the wanted test outlet is touched by the selector brush. The correct position is checked after the selector has been positioned. The selection does not depend on any condition or action that happened before the wanted outlet was reached.

Systems depending on the counting of impulses for the correct positioning of the selector switches must provide faultless transmission and reception of every impulse. An error in any impulse results in a wrong selection and there is no check to ascertain whether the operation has been completed correctly. The comparator method is inherently more accurate and in addition includes error-correcting means that make it much more dependable than pulse-counting systems.

Electromechanical operations have been reduced to a minimum in the selection process. An electromagnetic clutch is operated to couple the rotor of the selector switch to the constantly rotating drive shaft and thus start the hunting. When the brush touches the required test outlet on the rotary switch and the comparator matches the characteristic potentials of that outlet with those called for by the register, a relay in the register operates and the electromagnetic clutch is released, thus stopping the switch rotor at the selected outlet. With the exception of the clutch and one relay, the entire selection operation is done with static equipment concentrated in the register circuits. The tubes used have a very long life as they carry current only during the moments of effecting selection control. There is no significant wear and no adjustments on the static equipment so that maintenance is non-existent.

As neither auxiliary apparatus nor marking multiples must be associated with the selectors in the comparator system, full benefit may be had of the characteristics of the single-motion selector switches.

The arrangement whereby the register exercises direct control over the single-motion selector switches obviously makes the speed of connection independent of the speed of dialing. To keep pace with the dialing, the selector need only complete its action in response to a dialed digit in the time required to receive the following digit. It is then ready for each digit as soon as that digit has been fully received. As a practical matter, a moderate hunting speed of 60 terminals per second is adequate to provide minimum selection time and no appreciable reduction in selection time results from operating the switches at a higher speed.

At a rotational speed of 60 terminals per second, the average time required to position a group selector has been found to be approximately 0.5 second. This includes not only the time for the search for a free outlet but for all other operations both at the register and the selector. It is therefore unnecessary to use an extremely fast switch.

With the comparator principle, the individual outlets of a group may be distributed in any arbitrary manner over the selector switch. This is advantageous for several reasons.

It is possible to assign a variable number of outlets to the different groups connected to a group-selector arc so that each group may have a number of outlets proportional to the traffic volume it carries. As a result, the multiple of a selection stage may be divided for all groups of outlets into an equal number of splits irrespective of the traffic volume carried by each group so that the grading of the complete selector multiple may be determined independently of the grouping of the selector outlets.

It also permits the use of all available group-selector outlets without consideration of the number of groups or levels employed.

The above two arrangements permit the application of a so-called homogeneous grading that once installed need not be changed even when the multiple is extended or if the distribution of traffic, and consequently the number of outlets allotted to the different groups, should change.

Another possibility is to distribute the outlets in a group uniformly over the switch. With non-homing selectors, the traffic will be equally distributed over all the outlets of a group, selection time will be minimized and equalized for all outlets of the group, and the selector switches will be subjected to uniform wear.

4. Line-Finder Operation

4.1 GENERAL

As will be seen in the typical junction diagram shown in the lower part of Figure 4, certain apparatus is divided into groups to serve blocks of 1000 subscriber lines. For originating traffic, such a group contains

A. subscriber's line equipment

B. associated call detectors

C. line-finder equipment

D. cord or link circuits, including the 2nd line finders and the 1st group selectors.

For terminating traffic, the group includes

E. penultimate group selectors

F. final selectors.

Each block of 100 subscribers' lines is multipled to a suitable number of 1st line finders and final selectors and to two call detectors. Ten multipled groups of 1st line finders are connected to 2nd line finders associated with a group of cord circuits. Similarly, 10 sets of final selectors are multipled to the penultimate group selectors. Thus, 10 blocks of 100 subscribers' lines are combined into a single switching unit of 1000 subscribers' lines.

The use of decimal numbering for the penultimate and final-selector stages in searching for a desired subscriber's line makes a 1000-line switching unit logical. The division into 1000-line blocks is basic and even influences the arrangement of the apparatus in the exchange, all the equipment for such a block being mounted together, preferably in a single row of switchracks. A 10 000-line exchange would contain 10 identical rows of switchracks. The common apparatus such as registers, group selectors, and test equipment is accommodated in additional rows or it may be distributed over the 10 rows of switchracks.

4.2 FINDER CONTROL

The particular groups of 1st and 2nd line finders that are activated in the origination of a call depend on the individual subscriber's line placing the call. It is also evident from the lower part of Figure 4 that the call detectors serving a specified block of 100 lines may operate only in conjunction with one particular group of cord circuits. Therefore, when a call detector responds to a call, its associated cord finder hunts for a free cord circuit. All of the cord circuits in the 1000-line unit are multipled to the 20 call detectors in the unit. Both of the call detectors serving a 100-line unit may hunt for and seize a free cord circuit.

The circuits are arranged so that a call detector may seize a free cord circuit only if the cord circuit has access to a free register and if a free 1st line finder serving the calling line is in the multiple of the 2nd line finder associated with that free cord circuit. This ensures that the calling line may be connected to the free register via the cord circuit engaged by the call detector.

Registers are common to all of the 1000-line switching units in the exchange. They are divided into a number of subgroups, each subgroup having access through a cord chooser to a part of the cord circuits in the several 1000-line blocks. The cord circuits of each 1000-line block are equally divided over all register subgroups, which permits a calling subscriber to have access to all registers in the exchange.

The fact that a cord circuit may be seized only if it has access to a free register tends to distribute the traffic evenly over the register subgroups. The traffic capacity of the total number of register subgroups is very nearly the same as if a single group of registers with the same total number of circuits were provided.

After a call detector has seized a free cord circuit by means of its cord finder, it activates the starting circuits of the cord choosers associated with all free registers on the subgroup to which it has access.

As soon as a register is connected to the particular cord circuit, it assumes control of the call. It causes the 2nd line finder connected to the cord circuit to act as a selector and seek a free 1st line finder serving the particular hundreds group in which the call originated. The register now assumes control of the 1st line finder, which hunts for the calling line. The calling line is seized by the 1st line finder and connected to the register through the 1st and 2nd line finders, cord circuit, and cord chooser. The calling condition on the calling line is cancelled by connection to the register and the call detector is released from further part in this call.

In the selection of a free 1st line finder by a 2d line finder, the characteristic alternating-current potential that identifies the hundreds group of the calling lines associated with the particular call detector is supplied by the call detector through the cord finder and cord chooser to the comparator in the register. This permits a free 1st line finder connecting to the calling line to be identified. The particular calling line is identified by a 24-volt marking of its *C* conductor.

When a call is originated, the finders of both call detectors associated with the 100-line group start to hunt. Both endeavor to establish the connection between calling line and a free register. The first connection that is completed cancels the calling condition and the unsuccessful call detector abandons the call, releasing all seized circuits. This duplicate operation guarantees that the connection will be made over that combination of 4 switches that must hunt over the minimum total number of terminals and thus provides the faster service. It also provides a reserve connection in case a defect in one of the circuits prevents its proper functioning. This arrangement further permits two calls received simultaneously from a subgroup of 50 lines to be completed although only one call detector is provided for such a subgroup.

It should be observed that each originating call activates only two line finders and, in some cases, only one line finder. Compared with the usual arrangement in which all free line finders serving a group of subscribers' lines start simultaneously to hunt for the calling line, there is a substantial reduction in the number of operations per finder for a given traffic density and in the concomitant wear on the switches. The noise produced by a large number of finders starting and stopping simultaneously or in rapid succession is an indication of the mechanical vibration and shock set up by them. Such vibration and shock have been found to be a direct cause of microphonic noise produced in speech circuits established through metallic contacts in equipment mounted immediately adjacent to the disturbing line finders. By operating only two finders at a time rather than a large group of them, microphonic noise can be reduced to a small fraction of its former value. This improvement has been confirmed in practice.

A considerable simplification results from controlling the 1st and 2nd line finders from electronic equipment concentrated in a relatively small number of registers. It is unnecessary to provide individual test and hunting-control apparatus for each finder. The circuits of the 1st line finders become practically identical to those of group and final selectors, permitting the use of interchangeable jack-in circuit units.

No common starting circuits are needed for the 1st and 2nd line finders; this provides a further reduction in equipment and improvement in reliability.

Despite the activation of a maximum of only two line-finder circuits instead of many, the time required to connect a free register to a calling line and supply dialing tone to the subscriber is on an average equal to that in other systems using backward-hunting finders.

5. *Interexchange Operation*

5.1 Principles

The comparator principle of matching potential-time patterns for the positioning of selector switches requires that the control originate in a register in the same office as the selector switch. It is impracticable to maintain the electrical outputs of two sources of complex waves located remotely from each other to that degree of precision that is required by the comparator.

A direct solution to the problem is to control all selectors from registers in the same office that houses the switches. In extending calls from other exchanges, the originating register transmits to an incoming register as many digits as are necessary to control the remaining selecting operations to complete the call.

As an example, assume that a subscriber at office *A* initiates a call that must be routed through a transit office *B* to a subscriber served by office *C*. The originating register engaged by the calling subscriber at *A* controls the selection of a junction to *B*. An incoming register at *B* receives from the register at *A* a sufficient number of digits to permit the *B* register to control the selection of the outgoing junction to *C*. Finally, the incoming register at *C* receives from the register at *A* the remaining numerical information to permit the *C* register to complete the call. As soon as the transit office *B* has established the connection from *B* to *C*, the *B* register is released for other calls.

Another function of the register controlling the selection of a called line is to determine the condition and class of this line. If the called and calling line are both in the same exchange, the selection and the testing of the called line for condition and class are entirely under the control of a single register. Depending on the condition of the called line, the register may switch the cord circuit to provide ringing current to the called line and ringing tone to the calling line or, if the called line were busy, provide busy tone to the calling line and release all equipment engaged beyond the 1st group selector. Where required, the register will initiate private-branch-exchange hunting or if the called line were in absentee condition, reroute the call to the appropriate operator and release the connection to the called line.

If two or more exchanges are involved in the handling of a call, the incoming register in the exchange to which the called line is connected does the necessary testing of the called line for condition and class. This register will transmit a signal to the register in the originating office, which will respond to that signal as though it had tested the called line itself. If the called line is busy, the originating register switches the cord circuit to connect busy tone to the calling line and releases all equipment involved in the connection beyond the 1st group selector. All junctions and all equipment seized at the distant exchanges are released. If, however, the called line is free, the originating register does not provide ringing tone to the calling line but connects it via the speech and supervisory bridge to the outgoing junction. The calling line then obtains ringing tone from the distant exchange, which also supplies ringing current to the called line.

5.2 VOICE-FREQUENCY SIGNALING

A novel signaling method is employed for transmitting numerical information from the originating register to registers in transit and terminating offices. It offers considerable advantages over previous methods.

The principles of this method are represented in Table 1. Each numeral is transmitted by a permutation code in which each of a series of four pulses may be either of two voice frequencies.

TABLE 1

CODE FOR TRANSMITTING NUMERALS BY FOUR 25-MILLISECOND PULSES

Numeral	Frequency in Cycles Per Second for Pulse			
	1	2	3	4
1	900	600	600	600
2	600	900	600	600
3	900	900	600	600
4	600	600	900	600
5	900	600	900	600
6	600	600	600	900
7	900	600	600	900
8	600	900	600	900
9	900	900	600	900
0	600	600	900	900

The voice-frequency pulses are transmitted over the speech circuits. This permits uninterrupted unregenerated transmission from the originating register directly to the terminating register through junctions and transit exchanges. The speech circuit through a transit exchange is maintained during the time the call is being completed and handles the code signals even though the register and other switching apparatus were released as soon as the speech circuit was set up.

Satisfactory transmission of the code pulses is obtained so long as the loss between the two registers does not exceed 20 decibels. This loss is made up chiefly of the attenuation in the junctions between the exchanges and that occurring in the equipment in the transit exchanges and is of a value that permits reliable operation between the most-distant exchanges of any network.

The code pulses are transmitted at a rate of 20 per second with equal pulse and space timing and without increased time for spaces between pulse groups, so 5 figures can be transmitted per second. The only limit on the speed of pulses is that they be not too short. They may be lengthened to any degree without causing an error. The maximum speed is set by the time required for the receiving equipment to respond.

Figure 8 shows the circuit arrangement for signaling from an originating to a receiving exchange, through two interexchange 2-wire junctions and a transit exchange. The supervisory relay bridge at the transit exchange operates only on direct current and does not repeat the voice-frequency pulses, which pass through the capacitors in the *A* and *B* wires.

The fact that each digit is transmitted with exactly four pulses permits a check to be made automatically to determine that all pulses have been sent and received. Only if all the pulses are received will the receiving register send a supervisory direct-current signal to the transmitting register to initiate the dispatch of the following encoded digit.

If four pulses are not received, further transmission of code groups is stopped and an alarm signal is produced. This ensures that incorrect numbers will not be transmitted to produce a wrong-number completion of the call; it also holds the circuit in its faulty condition to simplify and speed up maintenance.

Referring to Figure 8, when the terminating-office register has been seized and is ready to accept the number of the called line, a relay closes contact *A*, putting battery on conductor *A* and activating through the group selectors relay *OAK* in the originating exchange. In response, the originating register sends the first code pulse of the digit to be transmitted, which pulse passing through the capacitors in the *A* conductor operate relay *TAK* or *TBK*, depending on the frequency of the pulse current, and enter the digit-recording equipment.

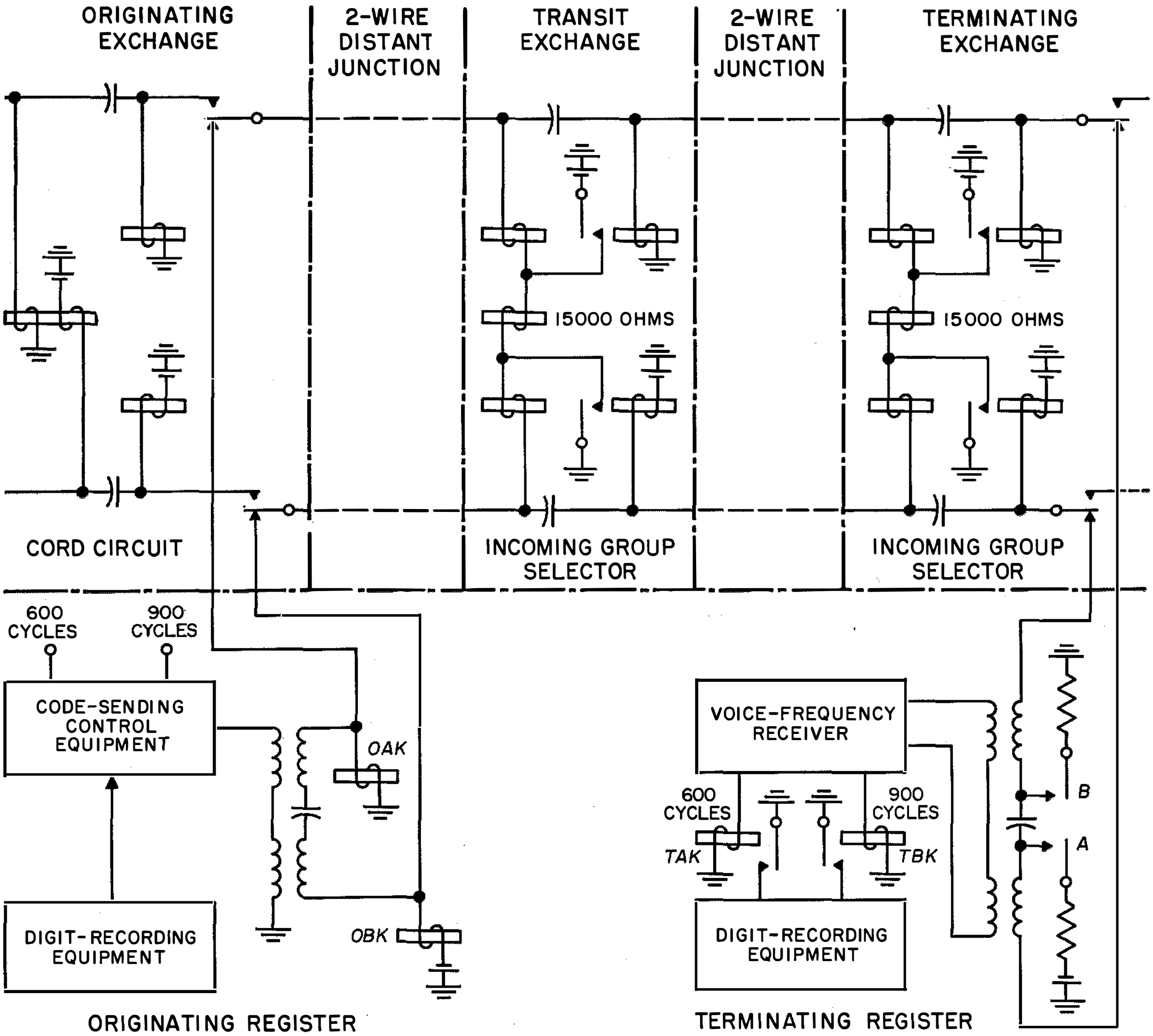

Figure 8—Method of transmitting digits through a transit exchange by frequency-coded pulses. All relays have 400-ohm windings except those indicated otherwise.

The receipt of the first pulse at the terminating exchange also opens *A*, which releases *OAK*. This indicates to the originating register that the first pulse was received at the terminating register. The originating register now transmits the three remaining pulses. When these pulses have completed the operation of the digit-recording equipment and set it to the corresponding number, contact *A* is closed again and the cycle has been completed.

The connections to the transit and terminating exchanges are under the control of the originating office by connecting earth and battery through relays *OAK* and *OBK* to the *A* and *B* conductors and the three relays at the incoming end of each junction, at least one of which is operated under any condition of signaling. When the originating register is disconnected, the direct-current supply is provided through the windings of the supervisory relays in the cord circuit.

In this manner, the holding and release of the junction equipment is not influenced by the transmission of the voice-frequency pulses. The level of the voice-frequency pulses is 1 milliwatt in 600 ohms, which is perfectly safe from the viewpoint of crosstalk.

6. *Switching Features and Facilities*

6.1 MICROPHONE SUPPLY CIRCUIT

The transmission bridges are of the capacitance-bridged impedance type. The relays in the bridges have permalloy sleeves over the cores and careful manufacture results in an impedance unbalance to ground of less than 0.5 percent. The attenuation at 800 cycles is only 0.3 decibel.

The resistance of the bridge depends on the type of telephone set used. With 48 volts, a preferred type of bridge has 400 ohms between each of two speech conductors and ground or battery. It permits the use of telephone sets employing high-resistance microphone capsules.

6.2 FAULTY LINES

The equipment is designed to work over subscribers' loops having a maximum resistance including that of the subscriber's set of 1400 ohms. Leakage corresponding to 10 000 ohms between *A* and *B* conductors or between one of these and earth will be tolerated.

The subscriber's line circuit will signal a faulty line to the exchange whenever the leak value corresponds to a shunt resistance less than 20 000 ohms. This results in a "leak" call. A cord and register are seized as if for a normal call. The register detects the condition and immediately transfers the call to a false-call desk and liberates itself.

"False" calls are those resulting from leaks to ground having resistances approximating that of the normal loop. Again, a cord circuit and register are seized. Failure to receive dial impulses for a prescribed delay of, say, 20 to 30 seconds causes the call to be routed to a false-call desk and the register circuit is released.

Equipment may be provided to identify and display on the false-call desk the number of the subscriber's line and indicate whether the trouble is a leak or a false call.

In the case of a leak call, the line is held busy to incoming calls to it but it may still originate calls. On listening, the subscriber will hear a busy tone indicating that the line is not in normal condition. A momentary depressing of the switchhook will disconnect the line from the false-call desk and permit a call to be placed in the usual way. At the termination of the call, the connection will be released but the leak will still be present and another leak call will be routed to the false-call desk again.

In some cases, subscribers' stations are connected to an exchange via long open wire lines that do not maintain adequate insulation during bad weather. Such lines may be connected temporarily or permanently to regular line and cutoff relays instead of using the line plug so as to avoid these leak calls. The line relay will respond only to calls originating over the regular maximum loop resistance. A small number of line and cutoff relays may be provided for such lines and may be inserted in place of the line plug by jumpering or by patch cords.

6.3 DIALING SPEEDS

The registers will work accurately at dialing speeds between 5 and 20 pulses per second and for impulse ratios of approximately 66:34. For dialing speeds between 8 and 12 pulses per second, the impulse ratio may vary between 80:20 and 40:60.

6.4 INTEREXCHANGE JUNCTIONS

All interexchange junctions are of the single-way two-wire type and can be taken out of circuit at either their incoming or outgoing ends. They will be automatically taken out of service if either the *A* or *B* wire becomes open, if a short-circuit occurs between the *A* and *B* wires, if the *B* wire is fully grounded, if there is no battery at the incoming selector due to a blown or missing fuse, or if the selector at the incoming end of the junction fails to release after a connection has been terminated.

The request for a register is battery on the *A* wire at the incoming end of the junction and the absence of battery and ground on the *B* wire. No register will be engaged at the incoming end if a failure results in ground on either *A* or *B* conductors, battery on *B* wire, battery on *A* with ground on *B*, or a short-circuit between *A* and *B*.

Table 2 indicates the maximum permissible loop resistance of the interexchange junctions.

TABLE 2

MAXIMUM PERMISSIBLE LOOP RESISTANCE

Direct-Current Ground Potential in Volts	Leak Resistance in Ohms	Loop Resistance for Relay Safety Factor of	
		50 Percent	25 Percent
0	10 000	2050	2800
6	10 000	1560	2200
10	10 000	1240	1800
17	30 000	1900	2500

This resistance is shown as a function of the ground potential, the safety factor included in the design of the supervisory relays, the kind of supervisory signalling employed, and the leak resistance between conductors and between the two conductors and ground.

6.5 EXCHANGE LOSS

As mentioned in Section 6.1, the speech bridge has a maximum attenuation of 0.3 decibel at 800 cycles. The loss in the exchange cable measured on a connection from the main distributing frame over the exchange equipment back to the main distributing frame, should not exceed 0.2 decibel. It is determined by the length and size of the conductors. The two subscribers' line plugs involved in a speech circuit contribute another 0.2 decibel of loss. The total attenuation on an exchange connection is approximately 0.7 decibel and 0.6 decibel for incoming, outgoing, and transit calls.

6.6 FORCED RELEASE

Normally, a connection is held under the control of the calling subscriber so that a call paid for by one subscriber cannot intentionally or accidentally be terminated by the called subscriber.

In case the calling subscriber releases but the called party does not, the former is set free immediately to permit other calls to be originated and received. The called subscriber's line will be held for about 20 to 30 seconds so that slight differences in the moments at which two subscribers release will not be cause for originating momentary calling conditions. After this delay, the called subscriber's line will be forcibly set free and will immediately initiate a call; failure to dial will constitute a false call and the line will be routed to the appropriate desk.

If the called subscriber releases but the calling party does not, the connection will be retained under the control of the calling subscriber for about 20 to 30 seconds and then forcibly released. The calling subscriber by failing to release will originate a false call and the called subscriber will be set free.

6.7 METERING

A local call will normally be metered once at the beginning of the conversation. Incorrectly dialed calls released prematurely, nonanswered calls, or calls to busy lines will not be metered. Calls to special services may or may not be metered as desired.

Time and zone metering may be provided for calls to an automatic rural area or for automatic toll calls. The junctions to the rural area or toll exchange will be provided with any suitable type of time-and-zone metering desired.

6.8 AUTOMATIC TICKETING

To facilitate automatic ticketing, arrangements may be provided for automatic identification of the number of the calling subscriber from the toll junction and the printing of this information on the toll ticket or other recording device.

6.9 PRIVATE BRANCH EXCHANGES

In earlier automatic systems, only a few groups of final selectors were arranged for private-branch-exchange hunting. This proved to be inadequate because in many cases the number of private branch exchanges became too large to be accommodated by the limited groups of final selectors, particularly as these customers produced heavy traffic that required extraordinarily large groups of selectors that upset the regular exchange layout and traffic distribution, and the arrangement was not sufficiently flexible with regard to growth.

By making all final selectors indiscriminately capable of handling both single lines and private-branch groups of lines, it was expected that by the private-branch-exchange groups being distributed over the entire exchange a suitable traffic balance could be reached.

It was found, however, that even though traffic could be equalized initially, this condition could not possibly be maintained in the long run. Unpredictable fluctuations occur in the growth of certain private branch exchanges, which may over a few years multiply by several times the amount of traffic handled originally. Other large groups may move to new quarters and require telephone moves as well.

Generally speaking, the private branch exchange is the chief cause of repeated unbalances in traffic distribution and this cannot be compensated for by the shifting of low-traffic single lines. Moreover, a single private branch exchange of only medium size may carry so much traffic that it needs all of the average number of line finders or final selectors provided in a normal group so that no other lines could be added to such a group. In some cases, therefore, additional separate large groups of final selectors have been provided to take care of the largest private branch exchanges.

Modern exchanges do not provide for changing the cross connections between line finders and final selectors. Consequently, the arcs of the line finders and final selectors are connected by fixed cabling. The use of large groups of private-branch-exchange final selectors involves correspondingly large groups of finders, and this adds further to the lack of regularity in the exchange equipment.

A further objection to present designs is that all lines in a private-branch group have to be connected to consecutive terminals on the final-selector arcs so that they may be hunted over from the first to the last without passing over nonassociated terminals. Additional terminals must be reserved for growth at the end of each group. Lacking such growth, the terminals remain vacant. In other cases, the reserve is used up and additional lines are not available when needed. The following paragraphs describe the manner in which the *7E* system copes with these conditions.

6.9.1 Small Private Branch Exchanges

Most private branch exchanges require only a few lines. Even with heavy traffic, it is possible to distribute such groups among all the groups of final selectors without encountering serious inequalities in traffic. It is usually possible to provide two or three adjacent terminals with consecutive numbers for these groups.

The *7E* system provides for an unlimited number of small groups having consecutive numbers. They may have any number of lines and the lines in a group may embrace numbers in different decades, that is, numbers with different tens figures.

The directory number is reached first by the selector brush and if it is busy the following lines will be tested until a free line is found. If no lines are free, the selector will stop on the last line whether it is free or busy. If it is occupied, the busy tone will be given to the calling line.

All of the lines in such a private-branch group must be connected to consecutive terminals in the same hundreds group. A group may extend beyond the last number to the first number in the hundreds unit such as 98, 99, 00, 01, et cetera. In this case, 98 would be the directory number.

Private-branch-exchange hunting is instituted only if the directory number is dialed and found busy. Other lines in the group may be dialed selectively as if they were single lines. If busy, no hunting over the rest of the group will occur. This permits night connections to be made to particular extensions for special calls, often indicated in the directory for night service. If hunting were permitted when such numbers are busy, the call would go to a different line.

6.9.2 Large Private Branch Exchanges

The lines of large private branch exchanges may be distributed in the *7E* system over the entire central-office equipment. This permits originating traffic to enter different line-finder groups to avoid overloading of any of the line-finder or cord-circuit groups. These numbers will not be in consecutive order but may be in different hundreds groups. They would not be used normally for calling but can be used for night calls as previously discussed.

A special block of numbers that are reserved from those normally assigned to the regular subscribers provide the directory numbers for these private branch exchanges. These numbers connect to a separate group of selectors that provide for outlets to a maximum of 100 private-branch lines. A maximum of 10 private branch exchanges will be served by one of these selector groups for an average of 10 lines each. Fewer than 10 branches having more than the average 10 lines can be connected to a selector, however.

The arcs of these private-branch selectors are cabled to terminal strips on the main distributing frame, where they are jumpered to the terminals corresponding to the numbers assigned from the regular block of subscribers' numbers.

The private-branch-exchange selectors act similarly to group selectors in which each group is identified as a private-branch-exchange number, the dialing of which selects any free line in the group. Continuous hunting is not used and after the whole group has been tested and found occupied, busy tone is sent to the calling line. The number of selectors and their grouping will be determined by the number of private branch exchanges and the number of lines in them. If more than 100 private-branch-exchange lines are to be connected, two or more groups of the group selectors must be provided. These selectors are called "units selectors" because they are controlled by the last or units figure of the private-branch-exchange group number.

The units selectors are preceded by "tens selectors," which are controlled by the tens figure of the directory number. If the number of large branches is between 10 and 100, the tens selectors are usually connected directly to one or more levels of the 1st group selectors and of the incoming group selectors. It is often possible to handle the traffic to large branches in this manner via fewer switching stages than if the regular local group and final selectors were used. This arrangement reduces the number of selectors in the exchange because the traffic from private branch exchanges, which is a substantial part of the total exchange traffic, is handled by fewer selectors. By removing the traffic for the private branch exchanges from the regular final selectors, the number of regular group and final selectors may be considerably decreased, more than offsetting the added selectors required for the private branch exchanges.

The lines in each group of private branch exchanges must be connected to consecutive terminals of the units group selector but any number of lines and the first line or directory number may be anywhere in the arc. Rearrangement may be made at any time to provide for a different number of lines in a given private-branch-exchange group.

6.10 TOLL SWITCHING

A wide range of toll switching facilities may be provided to meet the needs of the particular installation. As an example, toll operators may be permitted to offer toll calls to busy subscribers via the toll switching train but will have no means to break down an existing connection. Unlike local operation, the toll switching train will not release immediately when the called line is busy but permits the operator access to the speech circuit to offer the toll call to the subscriber.

With previous systems, this arrangement can present difficulties when the called line is a private branch exchange. The toll call will be offered to the last line of the group as that is the one that signals the busy condition after all preceding lines have been tested. If the last line accepts the call, the local connection will be released and the toll connection made. Now, the last line is engaged in a toll connection but other incoming toll calls will also be offered to it while all the other lines are busy. These toll calls will not be accepted by the subscriber as, presumably, they are of no greater importance than the first toll call that is still connected. The last line will be disturbed by every toll call offered while all lines are occupied.

The same situation exists if the party on the last line refuses the toll call because it is for someone else in the organization. Again, that circuit will continue to be interrupted by all toll calls and by repeats of the original toll call that are made during the busy period.

The *7E* system can be arranged to permit the toll operator to offer a call to the last line if all lines are busy. If the toll call is accepted, the local circuit is released and the toll connection is made.

If the toll call is not accepted by the last line, the operator will repeat the call and it will then automatically be offered to the next-to-last line. This will continue until the call is accepted or refused by all the lines. Another toll call arriving during this process will not be offered to any line that has previously been offered a toll call so that no conversation will be interrupted or disturbed more than once. As soon as a line becomes free, the toll call will be directed to it, even though it refused a call previously while it was occupied.

This arrangement requires a circuit that includes one relay for each private-branch-exchange line to be equipped for this feature. These relay circuits may be connected to any such line by cross connection on the main distributing frame.

6.11 Absentee Service

The absentee condition is produced by grounding one of the terminals of the subscriber's line circuit at the main distributing frame. Calls to the line will be automatically rerouted under the control of the register to an operator's desk. The caller will then be given such information as the absentee subscriber requested.

The ground may be obtained through the use of a suitable subscriber's line plug or if the condition is to be maintained for a limited time, for certain hours of the day, for instance, it may be controlled from the absentee-operator's desk by a relay.

A call originated from a subscriber's line in the absentee condition will seize a register and cord circuit. The register will detect the absentee condition of the calling line and connect the line immediately to the absentee desk. The subscriber may then order the removal of the condition or issue any other suitable instructions.

6.12 Absentee Printer

A simple tape printer may be installed at the subscriber's station to print the number of each calling line during a period of absence. This service requires identification equipment at the exchange. The line must be jumpered at the exchange to an adapter circuit, which will signal the number of the calling line to the printer when the subscriber has switched the printer into the circuit.

6.13 Malicious Calls

Malicious calls are those placed to annoy a subscriber. Often they take the form of calls placed at inconvenient or disturbing times, such as in the middle of the night. The calls may be repeated and the ringing continued until the call is answered, when to avoid recognition the caller releases without speaking.

If such calls are being received, the subscriber's line is connected to a malicious-call adapter circuit at the main distributing frame either by patch cord or jumpering. From the moment that the called line answers, the release of the connection will no longer be under the control of the calling line. The circuits will release in the usual way if the called line does not answer, which will take care of normal calls that are released when the subscriber does not answer in a reasonable time. Also, in the case of normal calls, the connection will release when both subscribers have cleared. However, if the call is malicious, the called subscriber dials any figure to identify it as such.

The malicious-call adapter will on receipt of the dialed pulse or pulses light a signal lamp on the wire chief's desk and if the exchange is equipped to identify calling numbers will also display there the number of the line originating the call. If the exchange is not provided with equipment to identify calling numbers, the staff will find the line by tracing the positions of the various switches. The signal sent by the called party will block the calling line so that it can be released only by depressing a key on the wire chief's desk.

The called subscriber may then restore; his line is then transferred to an auxiliary line circuit over which he may originate calls. Normally he will then call the central office and inform the attendant of the nature of the malicious call.

Alternatively, the called subscriber after dialing to put the malicious-call equipment in operation may continue with the malicious call The attendant will listen to the call by plugging into a listening jack associated with the indicator lamp. After the case has been investigated, the blocked connection will be released by depressing the key.

The auxiliary line will be available to the called subscriber only while his normal line is blocked. The depressing of the release key places the normal line back in service and withdraws the auxiliary from the subscriber provided no other call is in progress on that line.

It is evident that the simple act of answering the malicious call holds the calling line and the dialing of any digit signals this to the exchange and holds the connection until it is released by the wire chief.

The detection of the origin of malicious calls has proved to be completely effective against their continuance. The use of a malicious-call adapter for a short time is normally sufficient and only a few of these circuits are needed in an exchange.

These devices are operative not only for calls within an exchange but also from other exchanges as the two-wire interexchange junctions will transmit the holding signal. If calling-line identification is provided, it too will operate over the junctions. Otherwise, the call must be traced manually by following the positions of the engaged switches in the originating exchange.

6.14 Calling-Number Indicators

An electromechanical number display may be installed at a subscriber's station to indicate the number of the calling subscriber. The number will disappear automatically when the call is released. The subscriber's line is connected to an adapter circuit that transmits this information over the two normal line conductors to the number indicator without disturbing the speech channel.

Such a facility is of particular interest to police and fire stations. Merchants who may be victims of fraudulent orders received by telephone are enabled to verify the calling number against the address given by the caller. Such an arrangement may also be used in malicious-call cases.

6.15 Coin Boxes

Coin-box adapters may be jumpered on the main distributing frame to any subscriber's line to permit that method of collecting fees. It will provide the necessary control and signaling for coin collection and refunding.

6.16 Party Lines

All normal types of party-line service are available. When the number of party-line stations is small compared to the number of private-line subscribers, the party lines are usually connected on a terminal-per-station basis, each party having a number similar to those for private lines. When the number of party lines is large, a terminal-per-line arrangement is used and a suffix is added to the party number to identify the individual subscriber in the group.

6.17 Circuits for Repair Men

Arrangements may be made to permit repair men to reach the wire chief's desk through the automatic equipment with metallic connections that allow the wire chief to check the line directly or to send out ringing current as an aid in adjusting ringers. Alternatively, the repair man may dial a special number that automatically returns ringing current to the calling line.

6.18 Centralized Testing

Selector equipment is provided at the wire chief's desk to obtain a metallic connection to any subscriber's line for testing. If desired, such testing may be done from a centralized test desk in one exchange in addition to doing it from a test position in each exchange.

6.19 Service Observation

Each line may be patched on the main distributing frame to service observation equipment that can be controlled from a centralized service observation desk.

An estimate is made of the number of observation circuits that will be required for an exchange and a common junction is installed to the central observation desk. Manual observation may be replaced by transportable printers that record on paper tape all particulars of each call originated by and terminated on the line under observation.

6.20 Traffic Recording

Traffic recorders may be connected to the registers to indicate the number of calls of each class handled. Provision is made in all circuits such as selectors, junctions, and registers for the connection of direct-reading traffic recorders to record the average traffic density on any predetermined group of circuits during a particular period. The readings directly express the traffic per hour in Erlangs or equated busy-hour calls for the measured period.

6.21 ROUTINE TESTING

Automatic equipment may be provided to test systematically all of the exchange equipment for operation within safe limits. This greatly facilitates preventative maintenance as trouble may be corrected before it develops to a degree that would interrupt service. The routine-test equipment indicates the exact location of trouble.

6.22 IDENTIFICATION OF CALLING NUMBER

A relatively small amount of equipment is required to provide automatic identification of a calling number. This facility is useful in many ways, some of which have already been discussed. In addition, it can speed up combined-line-and-recording toll service by making unnecessary the calling back of the subscriber initiating the call via the toll switching equipment. It permits automatic ticketing of toll calls in conjunction with automatic toll dialing.

7. Noise

Considerable attention is being given to the noise introduced into the speech circuits provided by automatic switching systems. The extension of local circuits through toll exchanges and long-distance operation over several sets of automatic switching equipment has drawn particular attention to the establishment of maximum permissible noise levels.

Certain types of switches using sliding contacts produce a particularly high noise level and have encouraged some telephone engineers to believe that all systems employing such contacts must generate noise. As with all such equipment, the noise produced is greatly influenced by the design of the particular switch. It must also be remembered that all noise appearing in the speech channel is not created solely by the switch contacts. There are four major causes of noise.

A. Although theoretically all speech circuits are operated from low-internal-impedance high-capacity storage batteries having extremely good voltage regulation, the rapid variation in the exchange load caused by the multitudinous switching operations are not entirely filtered by the battery but are impressed in part on all the speech circuits. This is particularly true of inductive and capacitive discharges into the battery circuit.

B. Inductive and capacitive coupling among the speech and signaling circuits induce noise into the speech channels.

C. Noise is produced by the capacitive effect of switch brushes rotating over terminals connected to circuits carrying speech.

D. Microphonic contact between the active elements of the switch.

Only the last two effects can be attributed to the type of switch and care should be taken to distinguish between contact noise *D* and the other causes, which in many cases are of dominant importance.

Noise due to battery voltage fluctuations is much greater in some systems than in others. The simultaneous operation of large numbers of relays or the utilization of powerful switching magnets that produce large current changes and inductive impulses gives trouble of this nature.

In the *7E* system, the positioning of a rotary switch involves the operation and release of an electromagnet only once per conversation. It has been found unnecessary to provide a separate battery, a so-called silent battery, to operate the supervisory circuits. By proper design of the power plant, the disturbing potentials at the main battery bus remain below the recommended upper limit of 2 millivolts measured psophometrically under full-load conditions.

With regard to item *B*, four precautions are taken to prevent noise from being induced into speech circuits. First, the signaling operations required to establish connections will not cause audible clicks in the adjacent speech circuits. Second, the switchboard cabling interconnecting the various switching stages separates the signaling and speech conductors into different cables. Third, the application of homogeneous grading for the interconnection of the switch multiples contributes to noise reduction. Fourth, a high symmetry to ground is maintained for the battery supply and supervisory bridges by careful manufacture to meet specifications for the equipment.

With regard to the homogeneous grading, the switch outlets with few exceptions are multipled over the switches of only two splits so there will be no large multiples. Also, any two circuits connected to adjacent terminals in one split are never multipled to terminals belonging to the same second split so that possible interference between two adjacent circuits is restricted to the length of multiple extending over only one split, which in most cases corresponds to one bay multiple. This arrangement contributes effectively to the very low crosstalk interference between speech circuits, which is better than 90 decibels.

Although the noise mentioned in *C* is not often discussed, it is not altogether negligible in systems using switches with sliding contacts. As the brushes of a switch wipe consecutively over contacts in speech circuits, they encounter varying instantaneous potentials. The capacitance of the brush and its connected wiring in assuming the potential of each contact absorbs or gives up a charge depending on its immediately preceding condition. This current flow produces a click in the speech circuit to which the switch makes contact.

The strength of the charging or discharging current is a function of the capacitance and in practice depends largely on the length of the wiring connected to the brush when in the hunting condition. In the *7E* design, all rotary switches are mounted immediately adjacent to their associated relays, which carry contacts that open the circuit during hunting.

A further precaution is to disconnect the speech circuits in use from the multiples of those switches that give access to common circuits not employed during speech, such as register finders.

Microphonic or contact noise is the result of vibration transmitted via the bay framework and the ribbon cable to the contacts in the speech circuit. Normally, it is produced by the magnets that engage the rotary switch to the driving shaft and the rotation of the brush carriages of the switches adjacent to the contacts carrying the speech. The effect is directly dependent on the amplitude and duration of vibration produced by the operation of the switch.

The *7E* system uses rotary finders for all stages of switching. For each speech circuit set up, the electromagnet of the finder operates and releases only once, a minimum of operations. In addition, it has been found that most interference originates in switches immediately adjacent to the disturbed contacts. Considerably less trouble is caused to other switches on the same bay. If all or a large part of the free switches mounted on a bay operate simultaneously or at frequent intervals, the probability of producing noise is greatly increased. In each line-finder stage of the *7E* system, only one or a maximum of two finders hunt at a time for each call. Extensive tests have revealed that the noise produced in the *7E* system is low compared with other systems.

There are no generally accepted methods of making noise measurements so it is necessary to define exactly the test conditions and describe the apparatus employed in making the measurements.

Measurements were made under full traffic load in an exchange to which approximately 10 000 subscribers' lines were connected (12 000 equipped). The tests took place approximately five months after the exchange had been placed in regular service, during which time no cleaning or lubrication of switch contacts had taken place. The relative humidity was between 45 and 50 percent and the average temperature was 68 degrees fahrenheit (20 degrees centigrade).

The measuring apparatus was connected at the main distributing frame to 20 free subscriber lines chosen at random. The lines were divided into two groups of 10 each and each line in one group could be connected via the exchange equipment to each line in the other group. This permitted 100 different connections to be made with switching equipment distributed throughout the exchange.

Each of the 100 connections were set up consecutively for 100 seconds and the noise level was measured by two methods.

The first method utilized a psophometer having the characteristics specified in the recommendations of the Comité Consultatif International Téléphonique in its Livre Jaune, Tome 4, page 186. A filter was used that weighted each frequency on the basis of its ability to disturb a conversation. Those frequencies that produce the greatest reduction in intelligibility were attenuated the least.

The output was connected to a millivoltmeter through an integrating circuit having a time constant of 100 seconds. The millivoltmeter is read only once, at the end of the 100-second test period. It indicates the average disturbance over that period. If the integrating circuit were omitted, the meter indications would be lower.

The second series of tests were of the peak values of the noise impulses in a band from 100 to 10 000 cycles. All impulses having durations between 10 and 100 milliseconds were counted and longer disturbances were charged as one count for each 100 milliseconds of duration or additional part thereof.

In the first test, the psophometric potential integrated over 100 seconds varied between 0.22 and 0.38 millivolts and averaged 0.30 millivolts.

In the second test, the number of noise pulses within the 100-to-10 000-cycle band that exceeded 10 millivolts during the 100 seconds of each measurement were fewer than 1 for 74 percent of the connections, 2 for 88 percent, 3 for 95 percent, 5 for 99 percent, and 6 for 100 percent of the connections.

These tests indicate that the switching noise in the *7E* system due to all possible sources is so low that the system may be considered to be noisefree.

8. *Interworking With Other Systems*

In principle, the interworking of telephone exchanges of differing types depends chiefly on the methods of signaling employed.

If a *7E* exchange is to interwork with several offices of a different design, the *7E* system can be arranged to apply to the interexchange junctions the type of signals required by the other system. This can be done readily because in the *7E* exchange the information required to control the line selection at a distant office is transmitted from the originating registers, which can be designed to transmit the information in the form required by the other system. Further, incoming calls from the other central offices are always stored in the *7E* incoming registers, where they can be converted to *7E* signaling.

With this arrangement, the interworking equipment forms part of the register circuits of the *7E* exchange and no modifications are required in the exchanges of the other system.

If, however, the number of calls originating in the *7E* central office for the exchanges of the other system are only a small fraction of the total originated traffic, it may be uneconomical to arrange all originating registers for interworking. It may be preferable to provide a small group of convertor circuits to cooperate with the outgoing junction circuits, which convertors will be used only when signals must be translated from one system to the other. Similar convertors will be associated with the incoming junctions.

Another solution is to use *7E* signaling between exchanges and install the convertor apparatus in the other central offices. Although requiring modification of existing installations, this arrangement takes advantage of the higher quality and increased economy afforded by the *7E* system and in certain cases may permit the use of two-wire instead of three-wire junctions.

Consideration has been limited in the foregoing discussion to control of the selecting operations at a distant exchange of a different design. Completely new problems may arise in providing interworking if the signaling for switchhook supervision, holding and release, offering, reringing, et cetera are not the same for the two exchanges. These different conditions may require conversion equipment in each interexchange junction. This is not only expensive in first cost and maintenance but may degrade the service by requiring additional supervisory and/or dial-pulse repetition at the interexchange junction circuit.

It is obviously advantageous to choose systems that will interwork directly or with a minimum of conversion equipment for signaling. The *7E* system is designed to cooperate directly with other Rotary installations and makes an effective addition to a network of such exchanges.

9. *Automatic Toll Operation*

A description has been published[1] of the first Rotary long-distance switching system. It employs the rotary finder switch operating in the

---

[1] J. Kruithof and M. den Hertog, "Automatic Long Distance Switching Rotary System," *Electrical Communication*, volume 12, pages 172–190; January, 1934.

so-called backward-hunting fashion. This reduces hunting time and permits access to large toll groups.

In this system, large groups of finders hunt simultaneously for a calling inlet, which may be an incoming toll line or a local circuit. In the *7E* design, the same finder is used in a forward-hunting fashion but its selecting function is under the control of the phase comparator. Thus, the control circuits show a substantial economy in equipment. The impulse senders in the registers and the marker switches and starting circuits associated with the selectors are replaced by the phase comparators at the registers and a minor amount of phase connecting equipment at the selectors.

Although very short hunting times are obtained with backward-hunting finders operating simultaneously at consecutive finder stages, the average over-all selecting time for the *7E*-type long-distance dialing equipment is shorter than with the earlier design. Several features contribute to this increased operating speed.

In the *7E* design, the normal speed of the finders has been increased from 45 to 60 terminals per second. By using phase-comparison selection, no time is required for transferring dialed digits from the register to the control mechanism associated with the selectors used in the backward-hunting method. A new grading pattern combined with the use of nonhoming switches further reduces hunting time.

In a typical case involving a small group of seven toll lines reached via three stages of selectors, the average total switching time was 1.2 seconds, whereas 99 percent of the calls were completed in less than two seconds and 50 percent in less than one second. These figures include all the time required for the switching and control equipment involved in the three stages of selection and indicate the high speed of selection that characterizes the *7E* system.

In principle, the forward-hunting finder arrangement may be considered to employ series switching whereas backward-hunting involves parallel switching with large multiples.

With the forward-hunting finder, accessibility to large toll groups or alternative routing and overflow are obtained through by-path signaling from the groups of toll lines back to the translator equipment of the registers. The number of selecting stages depends on the number of directions to be reached. The number of directions chosen per selecting stage is a matter of convenience depending on the number of outlets per direction that offers an economical arrangement.

Magnetic Flux Meter for Measuring in Three Dimensions*

By MARTIN MÜLLER
C. Lorenz A. G.; Stuttgart, Germany

A MAGNETIC FLUX meter capable of measuring the three components of narrow cylindrical magnetic fields such as are required for the focusing of electron beams has been developed. The theoretical considerations and the practical design of a commercial model will be discussed.

Forces originating from charges, currents, or masses produce electric, magnetic, or gravitational fields in space. Such fields are necessarily three dimensional. The reason why we normally measure only unidimensional magnitudes, like current or voltage, is that we are interested only in one component or in the absolute value of the field strength. Another reason stems from the difficulties in making three-dimensional measurements.

In the case of magnetic fields, it is very important, however, to know all three components. This is particularly true for measurements of stray fields from strong magnets in the vicinity of which magnetically sensitive components are mounted. Out of the multitude of practical examples for such conditions, only a few need be quoted: mounting of regulators and controls on electrical machinery, operation of ferrite antennas in the vicinity of loudspeaker magnets, and manipulation of magnetic devices in nuclear research.

An important application that is critically dependent on a precise control of magnetic fields is that of cathode-ray tubes. Many tubes of this type, particularly the traveling-wave tube that has gained importance during the past several years, require a strong magnetic field to concentrate an electron beam. As is well known, the magnetic field required to confine the electron beam in either a cylindrical or tubular flow must be adjusted to conform to the rest of the design features of the tube and is between 100 and 1000 oersteds. This field should have no shunt components at least along its major axis. It can be shown that an electron beam accelerated by 1.4 kilovolts, the usual working voltage for traveling-wave tubes, is deflected by 0.04 inch (1 millimeter) from a straight line along a path of 2 inches (5 centimeters) if a shunt field of only 1 gauss is present. Since the diameter of the slow-wave structure in such tubes is about 0.08 inch (2 millimeters), a shunt component of this order is about the utmost that can be tolerated.

If a focusing field is set up by a solenoid, it is comparatively easy to control the desired field strength by selecting a suitable geometry for the winding, by precision in manufacture, and by adjustment of the magnetizing current. If, however, permanent magnets are used, it will be difficult to calculate the field strength, and variations in the magnetic properties of the materials in the structure will reduce the reliability of any predictions.

Hence, the question of measuring the magnetic field is of particular importance when permanent magnets are employed. These measurements are basic in applying corrective means and they must cover both the desired component of the field and the disturbing component, the latter being of an order of 1 to 0.1 percent of the desired values.

Measuring sets employing dead-beat galvanometers or the commonly used flux meters do not meet these new requirements. Unavoidable errors may accumulate to large values if numerous individual measurements are taken. The difficulties become apparent when variations along the useful component of the field are to be measured, as most of the present instruments are not sensitive enough to indicate these disturbing components. Also, the dimensions of the probes in most instruments do not conform to the requirements of measurements of the type under consideration.

With these requirements in mind, a new magnetic-flux meter was developed. It enables measurements of magnitude and direction of the three spatial components of long tubular magnetic fields to be obtained, it has the required sensitivity, its indications are reliable, and the manipulations involved are quickly and simply performed.

---

* Originally published under the title "Ein Drei-Komponenten-Flussmesser für Magnetfelder," *Radio Mentor*, number 5, page 249; 1955.

1. Fundamentals

The magnitude of a magnetic field may be converted into an electric voltage based on the law of induction

$$E = -n(d\Phi/dt) \qquad (1)$$

by which the voltage E induced in a winding of n turns is related to the magnetic flux Φ cutting the winding. Φ is obtained from the normal component of the induction B_n through the relation

$$\Phi = \int_A B_n \, dA \qquad (2)$$

where A is the coil area. If B is constant throughout A and if the coil is a uniformly wound solenoid having a relatively large ratio between the inner radius r_i and the outer radius r_o, the active coil area A_a can be defined as

$$A_a = \frac{\int_{ri}^{ro} \pi r^2 \, dr}{\int_{ri}^{ro} dr} = \frac{r_o^3 - r_i^3}{r_o - r_i} \cdot \frac{\pi}{3}. \qquad (3)$$

This coil is the probe. The volume of the probe is restricted by the dimensions of the fields being investigated. Practically, it must not exceed a quasispherical space with a radius of 0.10 to 0.13 inch (2.5 to 3 millimeters), which means that the coil area as well as the volume available for the coil turns are sharply restricted. Therefore, it is necessary to vary the coupling between the magnetic field and the conductors very rapidly by rotating the coil to obtain usable voltages from the weak induction field B that in this case varies between 10^{-8} and 10^{-5} volt-seconds per square centimeter. If the coil is rotated at N times per second, an alternating voltage is obtained whose frequency is N cycles per second. If this alternating voltage is rectified by a comutator, it can be indicated directly on an instrument of practical commercial design and the use of vacuum tubes may be avoided.

Designating by **B** the induction vector and by $B_\perp$ the angle formed by the plane of commutation and by another plane made up of **B** and the axis of rotation, the average direct voltage appearing across the commutator brushes is

$$E = 2\pi N n A_a B_\perp \frac{1}{\pi} \int_{\alpha=0}^{\pi} \cos(\alpha - \varphi) \, d\alpha$$

$$E = 4 N n A_a B_\perp \sin \varphi \qquad (4)$$

where $B_\perp$ is the projection of the **B** vector on the plane of rotation. Hence, the indicated direct voltage is exactly proportional to one field component, and its polarity corresponds to the polarity of the B component. Using three such coils will thus provide the possibility of measuring separately both the magnitude and the direction of any of the three spatial components of the magnetic field.

As only the plane of commutation is the determining factor, the number of coils may be reduced to two provided that one of them is equipped with two commutator brushes arranged perpendicularly to each other.

As to the load presented by the indicating instrument, the internal resistance of the coil must be taken into consideration. For a multilayer coil of copper wire of diameter d,

$$R = 0.68 \, n \frac{r_i + r_o}{(100d)^2}, \text{ ohms}$$

where the linear dimensions are in millimeters. By way of example, with

r_i = 1.1 millimeters
r_o = 2.5 millimeters
n = 1000 turns
N = 3000 revolutions per minute
d = 0.05 millimeter

then

E_{max}/B = 0.214 millivolt per gauss

and

R = 98 ohms.

2. Constructional Details and Operation

The construction of the instrument is indicated in Figure 1 and the completed instrument is shown in Figure 2.

The two coils *L1* and *L2* and their commutators are driven through a long shaft by a synchronous motor. The coils are located in the extreme end of the probe and revolve at 3000 revolutions per minute. Bevel gears are employed to obtain two right-angle rotations.

Assume that the driving shaft *A1* is in a position corresponding to the z axis of a Cartesian system of coordinates and the shaft *A2* coincides with the x axis. The y axis must then be visualized as being perpendicular to both shafts *A1* and *A2*. Hence, coil *L2* will measure the B_z component of the field if the plane of its commutation is the *y* axis. *L1*, however, has two pairs of brushes forming two planes perpendicular to each other, corresponding to the *x* and *y* axis and it will measure both the *x* and the *y* components of the magnetic field.

Since as a practical matter coils cannot be made to penetrate into each other, they must be mounted at two separate points in the probe. The distance between the coils is 0.4 inch (1 centimeter). A third coil is avoided by the double commutator attached to the coil that rotates on shaft *A1*; this shaft can be oriented with great precision in the system of coordinates. The fact that these structures can be manufactured with sufficient precision to these small physical dimensions, enables shunt components of the order of 0.1 percent of the longitudinal component to be measured with the additional advantage that both disturbing components can be measured at the same point in space.

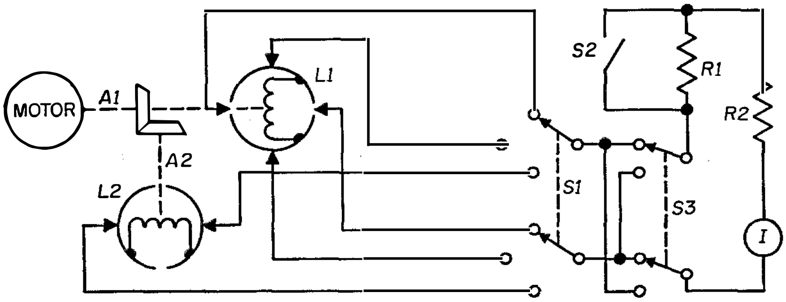

Figure 1—General operating arrangement of the magnetic flux meter.

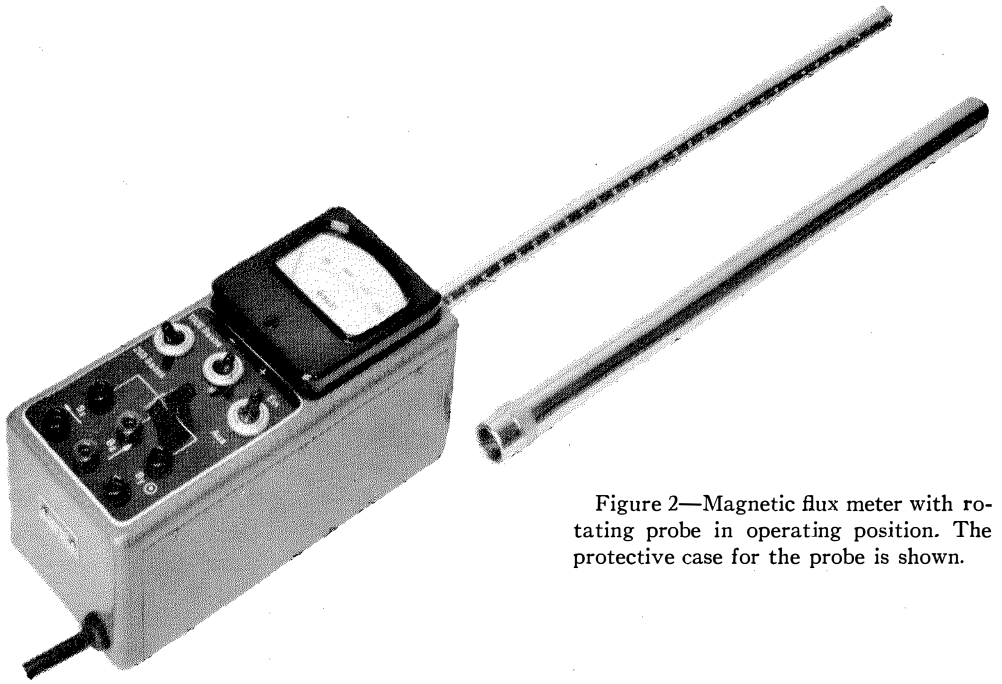

Figure 2—Magnetic flux meter with rotating probe in operating position. The protective case for the probe is shown.

The mechanical tolerances are chosen so that the shaft *A1* deviates from the probe axis by not more than 0.2 degree. That means that shunt components of the order of 0.3 percent of the longitudinal component can be measured. The orthogonality of the *x* and *y* axes to each other, given only by the physical arrangement of the commutator brushes, is adjusted so that the deviation from the directions indicated on the instrument does not exceed 2 degrees.

The six commutator brushes are connected to the flux-component selector switch *S1* that permits the indicating meter to be connected to the pair of brushes associated with a coil used in measuring one of the components. Coils, commutators, and conductors are contained within a cylindrical probe. Switch *S3* is a polarity-reversing switch and *S2* is a range switch that changes the amount of resistance in series with the indcating meter.

The indicator is of the moving-coil type with a full-scale deflection at 100 microamperes and with an internal resistance of approximately 200 ohms. The scale is calibrated in gausses from 0 to 1000 and the two measuring ranges provided give full-scale deflections at 200 and 1000 gausses.

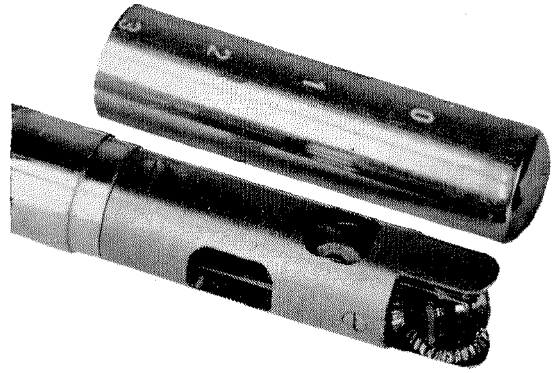

Figure 3—Close-up view of coil end of the probe.

In the more-sensitive range, values as low as 2 gausses may be read conveniently. Three pairs of jacks permit connections to other voltmeters so that the measuring ranges can be extended in either direction. If a galvanometer of sufficient sensitivity is employed, there are no difficulties in measuring the magnetic field of the earth in all its three components. The coils have an internal resistance of about 100 ohms and integrate over a spherical space 0.22 inch (5.5 millimeters) in diameter with a sensitivity of 0.2 millivolt per gauss.

Apart from the smallness of the components, another considerable difficulty in the design and construction of the flux meter is the necessity of avoiding the use of ferromagnetic materials in the probe, which is shown in Figure 3. The bearings are made of molybdenum and brass in ruby and hard fabric. The sleeve protecting the probe head could not be chromium plated because this would necessitate the application of a thin under layer of nickel that would cause a noticeable effect on the magnetic fields in the measuring coils.

The commutators and brushes have to bear a stress that is at least equivalent to that of the bearings and the gears. Moreover, the electrical performance is greatly dependent on mechanical stability because variation in contact resistance, the development of contact potentials, and the insulation resistance between the commutator bars are all direct causes of erroneous indication. After extensive investigations, spring bronze wire was used as the brush material and soft silver graphite for the commutator bars. Life tests of more than 200 hours proved the effectiveness of this combination. This test period is not so short as it might seem. The meter requires no warming-up time and is operated for very short periods to obtain readings. Five seconds of motor operation are usually enough for one measuring point so that 200 hours will permit the completion of 150 000 measurements.

3. Absolute Calibration

The meter is calibrated by use of a standard magnetic field. A coil is built to produce a magnetic field, at least along its symmetry axis, that can be computed exactly from the coil geometry and current. The maximum value of induction in gausses along the axis of a multilayer solenoid of length L, inner and outer diameters D_i and D_o in centimeters, of n turns, passing the current I in amperes, is given by

$$B_{max} = 0.4\pi \, I \, n \frac{1}{D_o - D_i} \ln \frac{D_o + (D_o^2 + L^2)^{1/2}}{D_i + (D_i^2 + L^2)^{1/2}}.$$

By way of example: 14 050 turns of 0.32-millimeter (28 American Wire Gage) enameled copper wire on a coil 8 centimeters long, $D_i = 2.5$ centimeters, $D_o = 6.82$ centimeters, will have at its center a peak field of $B = 2$ gausses for each milliampere of current. This coil for the calibration of the z component can, if precision made and coaxially arranged at the probe, serve to check the orthogonality of the z axis to the xy plane. The xy probe coil is conveniently calibrated by a permanent magnet previously calibrated by comparison with the z coil. Since both coils in the instrument are identically constructed this specified calibration is not usually necessary.

Microwave High-Speed Continuous Phase Shifter*

By WILLIAM SICHAK and D. J. LEVINE

Federal Telecommunication Laboratories, a division of International Telephone and Telegraph Corporation; Nutley, New Jersey

A CONTINUOUS phase shifter using circularly polarized helixes in a circular waveguide is described. The phase shifter is smaller than previous types[1] and has an insertion loss of less than 0.2 decibel. Equations for the phase-shift error and the amount of amplitude modulation produced due to reflections and elliptical polarization are derived. Errors less than ±2 degree can be obtained over a 3-percent frequency band. A 9400-megacycle-per-second model designed to rotate at 3600 revolutions per minute is $5\frac{1}{2}$ inches (14 centimeters) long and 1 inch (2.5 centimeters) in diameter, excluding the motor drive.

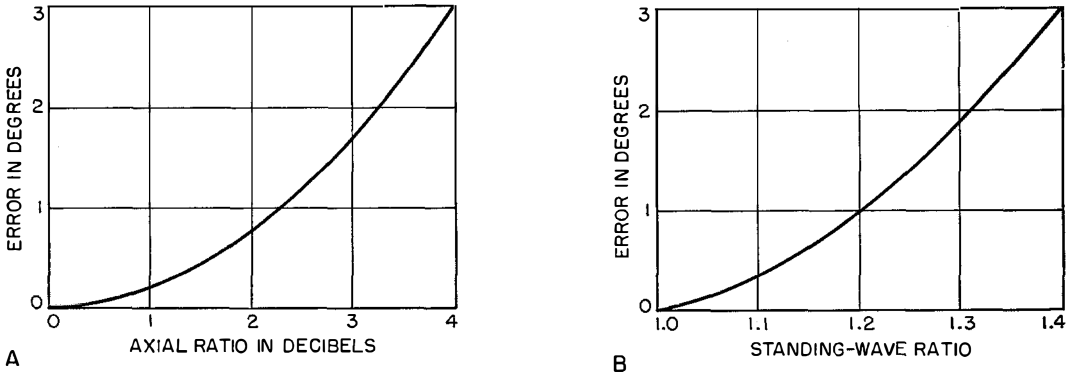

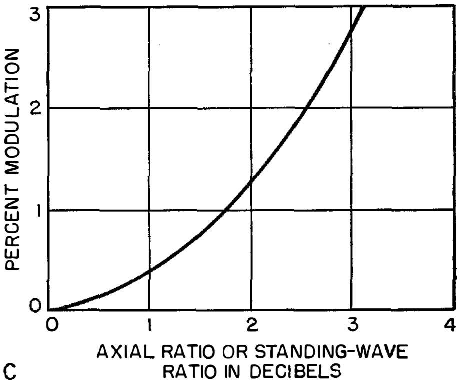

Figure 1—*A*—Phase-shift error versus axial ratio of each end. *B*—Phase-shift error versus standing-wave ratio. *C*—Percentage modulation of the phase-shifted wave versus axial ratio of each end or standing-wave ratio.

• • •

1. *Theory of Operation*

It can be shown that the phase of the output voltage of a circularly polarized antenna receiving a circularly polarized wave is directly proportional to the angle of rotation of the antenna about its longitudinal axis. To make a phase shifter, two circularly polarized antennas (each of the same screw sense) are mounted in a circular waveguide, and one antenna is rotated about its axis at the required rate.

1.1 Errors

1.1.1 Axial-Ratio Error

The relation between the maximum phase error and the axial ratios of the antennas is

$$\tan \Delta_{\max} = \frac{K-1}{2\cdot K^{1/2}}, \tag{1}$$

$$K = \frac{A+B}{1+AB},$$

---

*Reprinted from *Proceedings of the IRE*, volume 43, pages 1661–1663; November, 1955. Copyright © 1955 by The Institute of Radio Engineers, Incorporated.

[1] A. G. Fox, "An Adjustable Waveguide Phase Changer," *Proceedings of the IRE*, volume 35, pages 1489–1498; December, 1947.

where A and B are the axial ratios of the antennas and Δ is the error.

This relation is plotted in Figure 1A for the case where the axial ratios are equal. An axial ratio of 2 decibels produces an error of less than 1 degree.

1.1.2 *Standing-Wave Error*

It can be shown that the maximum phase-shift error $\Delta_{\max}$ is given by

$$\tan \Delta_{\max} = \frac{2P^2(1 - P^4)^{1/2}}{1 - 2P^4}, \qquad (2)$$

where P is the reflection coefficient of each end.

This equation is plotted in Figure 1B. A standing-wave ratio of 1.2 at each end causes an error of about 1 degree.

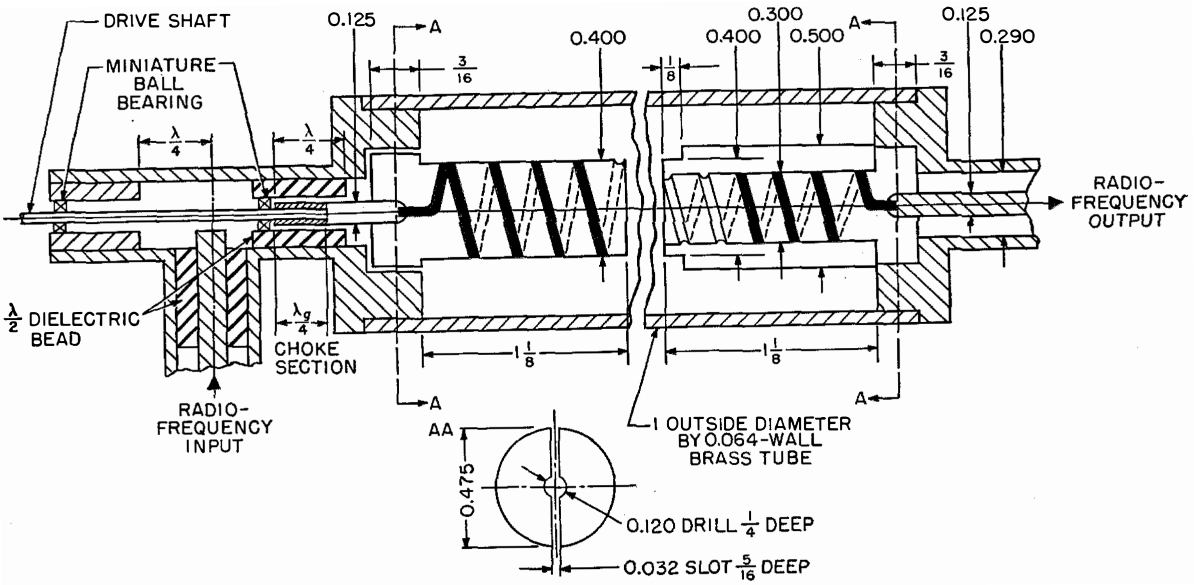

Figure 2—Cross section of rotary phase shifter. The rotary helix consists of $3\frac{7}{8}$ turns of 0.025-inch wire wound in a 4-thread-per-inch groove in a textolite form. The stationary helix is $3\frac{1}{2}$ turns of 0.025-inch wire wound in a 5-thread-per-inch groove in a teflon form that is covered by a teflon sheath. The end of each helix wire passes through the slot shown in the detail sketch and is soldered to the center element. Dimensions are in inches.

1.2 VARIATION IN OUTPUT AMPLITUDE

The ratio of maximum-to-minimum received voltage obtained when an elliptically polarized antenna is rotated in an elliptically polarized field[2] is $(1 + AB)/(A + B)$, where A and B are the axial ratios of the antennas.

For equal axial ratios, the percentage modulation m is $100(1 - A)^2/(1 + A)^2$. This equation is plotted in Figure 1C. Axial ratios of 2 decibels produce 1.3-percent modulation.

If the ends of the phase shifter are equally mismatched, the ratio of maximum-to-minimum voltage is $(1 + r^2)/2r$. The percentage modulation is $100\ (r - 1)^2/(r + 1)^2$.

The amplitude-modulation sidebands in the output are separated from the carrier by twice the rotational frequency of the phase shifter, since the input standing-wave ratio is the same whether the phase shift is θ or (180 degrees $+\ \theta$). The reflected wave consists of two parts: the first, due to the mismatch at the input end, is independent of rotation; the second, due to the mismatch at the load end, is shifted in frequency by twice the rotational frequency. If the load end of the phase shifter, including the helix, is perfectly matched and has an axial ratio of unity, there are no amplitude or phase errors in the output.

For simplicity, the above analyses have considered separately the effects of axial ratio and standing-wave ratio. For small errors, the maximum errors due to each can be added directly.

---

[2] "Reference Data for Radio Engineers," Federal Telephone and Radio Corporation, New York, New York, third edition; 1949: page 366.

2. *Rotary Phase Shifter*

2.1 DESCRIPTION

The rotary phase shifter shown in Figures 2 and 3, takes the form of a length of circular waveguide terminated in a helical circularly polarized H_{11}-mode launcher at each end. The 9400-megacycle model is about $5\frac{1}{2}$ inches (14 centimeters) long and 1 inch (2.5 centimeters) in diameter, not including the motor. The mass of the rotating textolite helix and its drive shaft is 5 grams. The sense of each helix is the same. The exploded view of Figure 3 illustrates two types of helixes; the textolite unsheathed helix at the rotating end and a fixed sheathed teflon helix. The helix spacing is about one inch (2.5 centimeters) between ends. It was found that a shorter spacing permitted direct coupling between the ends of the helixes and resulted in large errors.

These phase shifters can be rotated at speeds higher than 3600 revolutions per minute if desired. The phase-shift rate can be doubled by rotating the helixes in opposite directions.

2.2 HELIX DESIGN AND CONSTRUCTION

For use in this phase shifter, the helical-antenna design problem is complicated by the fact that the helix radiation field must be contained in a circular waveguide. It was decided to radiate an H_{11} mode in a circular waveguide dimensioned below cutoff for all higher modes. In this way, modes that introduce errors are avoided.

Several types of dielectric-mounted helixes were built with axial ratios less than 2 decibels and a voltage standing-wave ratio less than 2 on a 50-ohm line. These helixes were tested by rotating a small probe on the periphery of a circular waveguide terminated in a crossed tapered resistive-strip load.

The helix dimensions fell within the limits of Kraus' data,[3] although they were found to be more critical than the air-supported-helix dimensions.

Experimental work on the helixes indicated that the axial ratio was critically dependent on the length of wire used. For example, a $\frac{1}{8}$-inch (3-millimeter) change in wire length can result

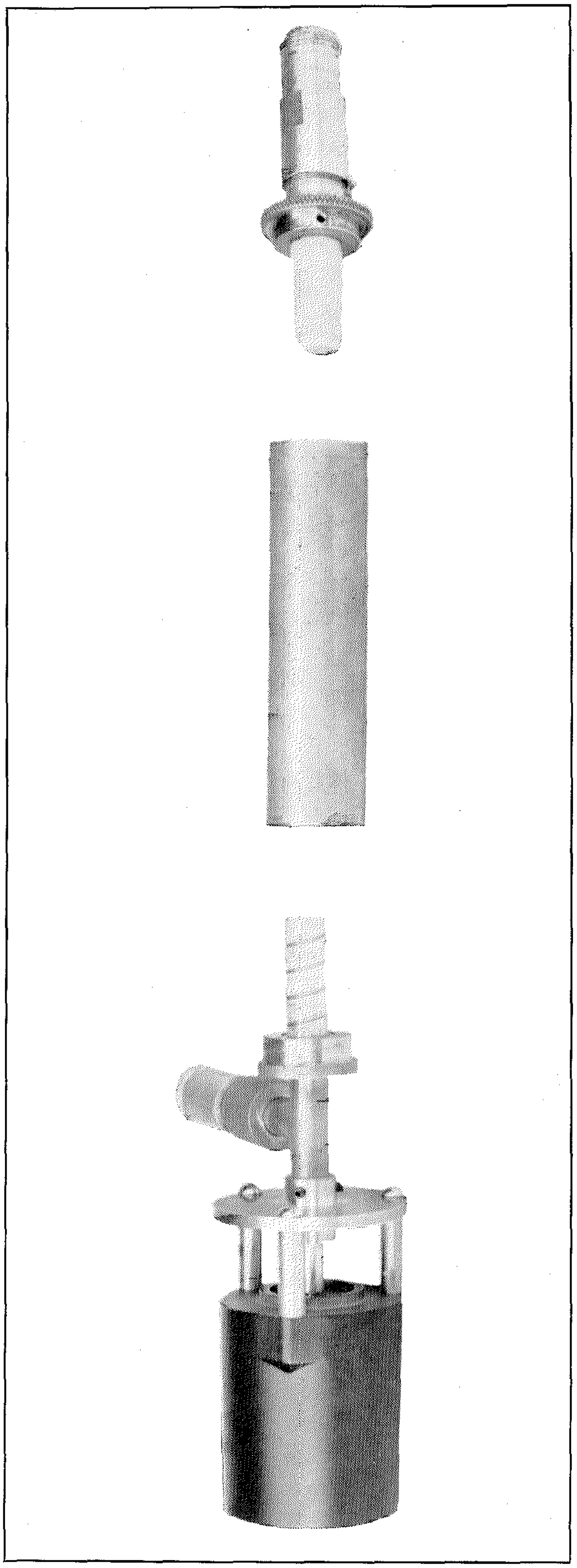

Figure 3—Exploded view of phase shifter.

---

[3] J. D. Kraus, "Antennas," McGraw-Hill Book Company, New York, New York; 1950: chapter 7.

in a 2-decibel axial-ratio change. However, once the axial ratio is reduced to about 1 decibel and the impedance is properly matched, the complete helix assembly exhibits good frequency response. The typical response curves of Figure 4 are for the teflon-mounted helix matched with a quarter-wave transformer.

The helix mounting method is quite important because of eccentricity errors. It was difficult to estimate the maximum permissible eccentricity, but if the helix end exhibits a peak-to-peak amplitude of less than 0.010 inch (0.25 millimeter) when the drive is rotated, then errors due to eccentricity should be small.

The total phase error to be expected from the use of this rotary phase shifter can be estimated from the apparent axial ratio (eccentricity and guide asymmetry give apparent axial ratios other than unity even if the helixes are perfect) and the voltage standing-wave ratio seen from the phase shifter looking in each direction from the center of the circular waveguide. Note that this means the voltage standing-wave ratio plotted in Figure 1 is the combined voltage standing-wave ratio of the helix and its load. Thus, referring to Figure 4 and assuming that each helix has the same axial ratio and voltage standing-wave ratio, from Figures 1A and 1B, the sum of the two phase errors at 9.2 and 9.5 kilomegacycles is less than 1.5 degrees.

The insertion loss of the phase shifter is less than 0.2 decibel caused by voltage standing-wave ratio and normal wall losses.

2.3 TESTS

The phase-shifting characteristics were measured on a circuit similar to the usual phase-measuring arrangements but without using an air path.[4,5] These tests indicate very sharp (about 2-degree wide) resonant-absorption and phase-shift-discontinuity regions, 180 degrees apart. This was attributed to a resonance of the small wrong-sense (for the helixes) waves set up in the phase-shifter cavity. To suppress this, called for either ideal circular polarization launchers or a "wrong-sense" suppressor. The latter was tried in the form of loss-loaded slots cut in the circular waveguide so as to afford minimum interference with wall currents set up by the fields of the desired screw sense. The slots act as partial suppressors for the unwanted sense of rotation. Such a procedure reduced the amplitude of the transmission loss at the resonant points from 13 to 1.5 decibels. At nonresonant points, the transmission loss was less than 0.2 decibel.

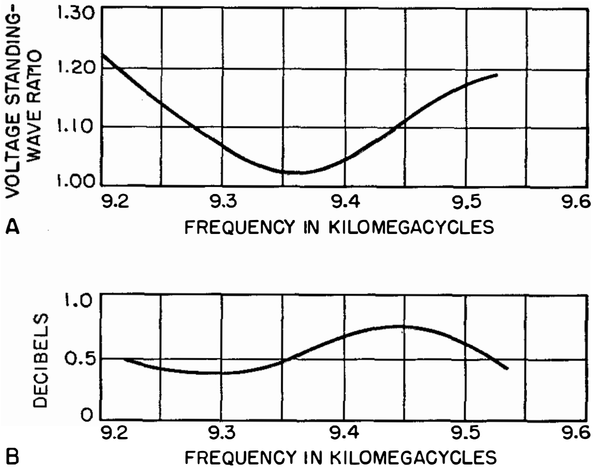

Figure 4—*A*—Standing-wave ratio of one helix versus frequency. *B*—Axial ratio of one helix versus frequency.

3. Conclusion

A continuous rotary phase shifter employing helical circularly polarized H_{11} axial-mode launchers in a circular waveguide has been built and tested. Investigation of the errors involved and measurements indicate that the phase errors can be made less than ±2 degrees maximum.

4. Acknowledgment

Acknowledgement is due to A. J. Lombardi for the mechanical design of the phase shifters and to A. T. Brown for making some of the measurements.

---

[4] J. D. Kraus, "Antennas," McGraw-Hill Book Company, New York, New York; 1950: page 452.

[5] C. G. Montgomery, "Techniques of Microwave Measurements," McGraw-Hill Book Company, New York, New York; 1947: page 916, figure 15.6.

Linear Sweep-Voltage Generators and Precision Amplitude Comparator Using Transistors*

By L. C. MERRILL and T. L. SLATER

Farnsworth Electronics Company, a division of International Telephone and Telegraph Corporation; Fort Wayne, Indiana

A BOOTSTRAP sweep generator, a Miller integrator sweep generator, and a precision amplitude comparator have been designed employing silicon junction transistors to reduce size, weight, and power consumption but retain the stability and accuracy requirements of modern electronic data-handling and computing equipment over a large temperature range.

The behavior of a sweep generator is viewed in terms of the complex-frequency plane to bring out the characteristics of the response function. The two types of sweep generators are discussed in terms of circuit parameters.

A highly stable bridge comparator circuit is analyzed to bring out the salient features of operation.

In data handling and computing applications, it is often advantageous to use digital processes for handling system variables. In many instances, the input information is in some analog form such as a direct-current voltage and must first be converted to digital form. Portions of one method of electronic analog-to-digital conversion are shown in block form in Figure 1.

The start pulse initiates the reference sweep and opens the gate to allow clock pulses to be counted. When the reference sweep equals the direct-current analog, a pulse is generated that stops the counter. The count is then a digital measure of the analog voltage. Attempts to obtain precision with this system are limited by the accuracy of the reference sweep generator and amplitude comparator.

Two types of reference sweep generators and an accurate amplitude comparator using currently available silicon junction transistors have been designed. The ability of these units to operate at high temperature is partly offset by the large variations in operating characteristics that are encountered and the relatively poor performance at room temperature.

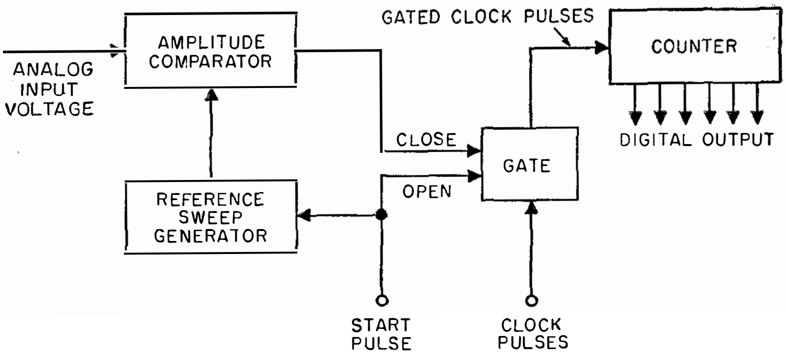

Figure 1—Conversion from analog to digital data.

1. *Sweep generators*[1]

Two well-known circuits that generate linear time sweeps are the bootstrap and Miller integrator. Block diagrams of these configurations are illustrated in Figure 2. Linear output from each circuit occurs when the charging current through the capacitor is constant. In applying transistors to the above circuits, the chief requirement was linearity and a secondary requirement was low output impedance. It was also demanded that the form of switching used should be such that when released, the output

---

* This work was performed for the United States Air Force under contract *AF33(600)-28183*. The work on the amplitude comparator was suggested by the paper by F. H. Blecher on "Transistor Circuits for Analog to Binary Code Conversion" given at the Institute of Radio Engineers transistor symposium held at the University of Pennsylvania on February 18, 1955. It described a comparator utilizing a single diode and transistor. The circuit described herein resulted from an attempt to improve the stability of his configuration with respect to variations in temperature and transistor parameters and to reduce or eliminate compensating adjustments.

[1] "Waveforms," McGraw-Hill Book Company, New York, New York; 1949: pages 254–288.

should not reverse its slope while recovering from the switching transients. It was not necessary that the output be linear immediately.

Linearity characteristics of a sweep generator may be visualized in the complex-frequency plane as follows. The behavior of the output voltage after a sufficient length of time is governed by the behavior of the frequency transform in the vicinity of $s = 0$, where s is the complex-frequency variable. Ideally the behavior here should be like $1/s^2$, the transform of a linear function of time. The actual transform of the output will be the product of the switch-opening function $1/s$ and a circuit response function like $1/(s + 1/\tau)$ where τ is a time constant caused by the interaction of R, C, and the amplifier gain.[2] Naturally, the larger the magnitude of the time constant, the more nearly ideal will be the combined function $1/[s(s + 1/\tau)]$.

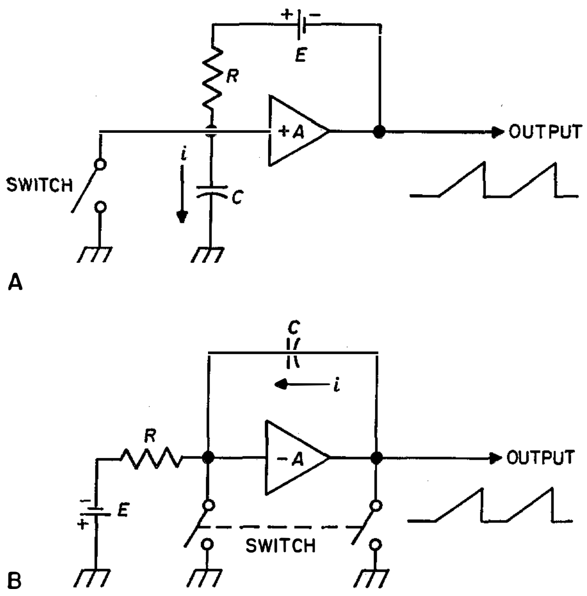

Figure 2—Two types of sweep generators. A = bootstrap and B = Miller integrator.

The response immediately after switching is governed by the behavior of the transform far removed from the origin. There are always poles in any practical amplifier response function at sufficiently large s. As long as the position of these poles corresponds to short damping time constants, that is, $R_e(s) \ll 0$, the transients they represent will die away rapidly.

The over-all situation regarding the transfer function is illustrated in Figure 3.

The smallness of the interval spanned by the possible values of the large time constant is a measure of how long the output will be linear, and the breadth of the void region to the left measures how quickly the output becomes linear. Naturally, the larger the ratio between these two intervals, the more usable will be the sweep output. The requirements in this case were such that the single pole had to correspond to a time constant of absolute magnitude greater than 10 seconds, and the others (caused by amplifier response) had to correspond to decay times of 100 microseconds or less.

1.1 Bootstrap Circuit

For the bootstrap generator, the large time constant is given by

$$\tau = C\frac{Ry_{22} + 1}{R\Delta y + \Sigma y'}, \qquad (1)$$

where the y's are the 2-terminal-pair low-frequency admittance parameters of the amplifier.

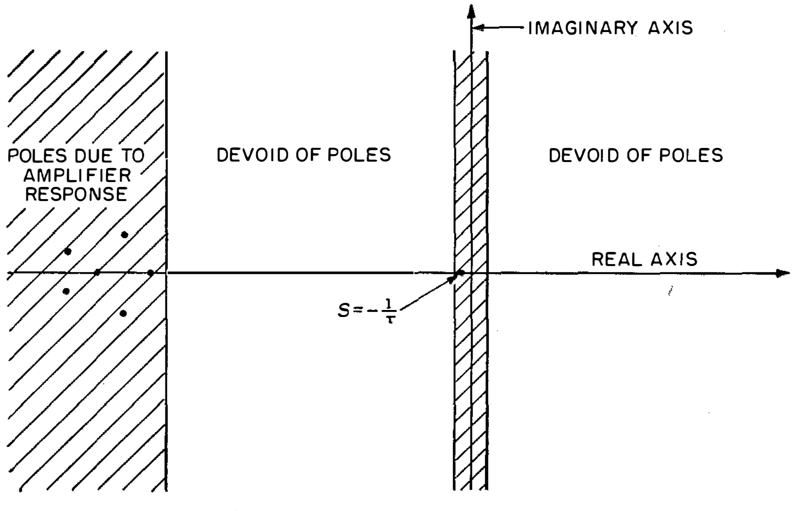

Figure 3—Illustration of the sweep-generator transfer function in the s-plane.

---

[2] R. F. Shea, "Principles of Transistor Circuits," John Wiley and Sons, New York, New York; 1953: page 417.

Δy denotes the determinant and Σy the sum of these parameters.

An ideal or infinite time constant results if

$$\left.\begin{aligned} R\Delta y + \Sigma y &= 0 \\ \text{or} \qquad \Sigma y / R\Delta y &= -1. \end{aligned}\right\} \quad (2)$$

For a unilateral amplifier ($y_{12} = 0$), this becomes

$$\left.\begin{aligned} (z_{11} + z_{22} - z_{21})/R &= -1 \\ \text{or} \qquad R &= z_{21} - z_{11} - z_{22}. \end{aligned}\right\} \quad (3)$$

The direct-current closed-loop voltage gain around the bootstrap circuit of Figure 2 is given by

$$\frac{z_{21}}{z_{11}} \cdot \frac{z_{11}}{R + z_{11} + z_{22}}. \qquad (4)$$

If the value of R in (3) is substituted into the above expression, the closed-loop voltage gain is seen to be unity. Thus, the condition of infinite time constant and unit closed-loop gain are equivalent for the unilateral case. This result can be shown to hold for the general case.

The output impedance can be expressed as

$$Z_{\text{out}} = \frac{1 + y_{11}R + sCR}{C(1 + y_{22}R)(s + 1/\tau)},$$

where τ is defined in (1). This impedance is similar to that of a resistor shunted by a series-connected capacitor and resistor.

The impedance is lowest at high frequencies and is given by $R/(1 + y_{22}R)$, which is the parallel combination of the amplifier output impedance and resistor R. The impedance rises as the frequency drops, until at zero frequency it is given by

$$\frac{\tau}{C}\left(\frac{1 + y_{11}R}{1 + y_{22}R}\right),$$

which can approach open-circuit conditions as the circuit is made ideal from the linearity standpoint $\tau \rightarrow \infty$.

Assuming a wide spread in the small-signal parameters, it is evident from expression (4) for loop voltage gain that the amplifier should possess an unloaded voltage gain that is intrinsically close to unity ($z_{12}/z_{11} = 1$) together with a high input impedance ($z_{11} \rightarrow \sigma$).

Of the simpler junction-transistor configurations, the use of a double emitter-follower or super-α configuration[3] seems best, as shown in Figure 4, but special compensation for 0.1-percent linearity is necessary.

The compensating network consists of *C4* and *R4*. The two *904* transistors in the left part of Figure 4 together with diode *D2* perform the switching action. *R2* and the series combination of *C3* and *C4* are the *R* and *C* of the block diagram, while the coupling capacitor *C2* and diode *D1* serve as the battery *E*. When using high-μ vacuum tubes in the bootstrap circuit, the cathode-follower is an excellent choice because of its almost-infinite input resistance and nearly unity gain.

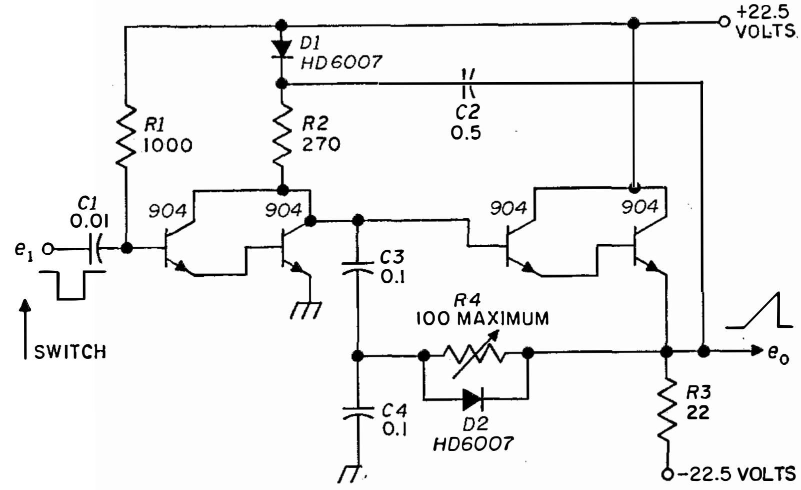

Figure 4—Bootstrap sweep generator. The values of resistance are indicated in kilohms and of capacitance in microfarads.

2. Miller Integrator

The long time constant for the Miller integrator is given by

$$\tau = C\Sigma y/\Delta y, \qquad (6)$$

where the resistor R is assumed to be included in the input admittance parameter y_{11}. The ideal situation $\tau \rightarrow \infty$ is when $\Sigma y/\Delta y \rightarrow \infty$. This can

---

[3] A. R. Pearlman, "Some Properties and Circuit Applications of Super-Alpha Composite Transistors," *Transactions of the IRE Professional Group on Electron Devices*, volume ED-2, pages 25–43; January, 1955.

be accomplished by making y_{21} sufficiently large in a cascaded amplifier. In the case of a unilateral amplifier where y_{11} and y_{22} are negligibly small compared to y_{21}, the time constant becomes

$$\tau \approx Cy_{21}/y_{11}y_{22}. \qquad (7)$$

The quantity $y_{21}/y_{11}y_{22}$ may be interpreted as either the product of output impedance and current gain or the product of input impedance and voltage gain.

The output impedance is given by

$$Z_{\text{out}} = \frac{y_{11} + sC}{\Delta y + sC\Sigma y}. \qquad (8)$$

This impedance function is of the same form as in the bootstrap circuit, except for values. In this case, the high-frequency value is $1/\Sigma y$, which can be made arbitrarily small for $y_{21} \rightarrow \infty$. The maximum or low-frequency value is $y_{11}/\Delta y = z_{22}$, the output impedance of the amplifier.

In the Miller integrator, linearity is obtained by using sufficiently high gain. The output impedance is made low by using both a low internal output impedance and high gain.

In comparing the two circuits, it is seen that the Miller integrator possesses the following advantages over the bootstrap circuit.

A. Lower output impedance for given output-stage configurations.

B. No compensation if sufficient reserve gain is used.

C. Linearity stability with temperature variations, assuming sufficient reserve gain.

The Miller integrator shown in Figure 5 produces a sweep with linearity better than 0.1 percent with 3 grounded-emitter stages using (Texas Instrument) *903* silicon junction transistors.

This circuit presents a stability problem because of the effective short-circuit feedback at high frequencies coupled with the high gain. Sufficient bandwidth must be available so that high-frequency-stability shaping techniques can be used and still give closed-loop high-frequency-damping time constants less than 100 microseconds long. It turns out that the available bandwidth of the grounded-emitter amplifier is in the vicinity of 100 kilocycles per second so that direct-current gains of many thousands can be stabilized and still give closed-loop corner frequencies high enough to satisfy the requirements. In fact, a simple bypass capacitor on the first base is sufficient and satisfies the impedance requirement at high frequencies and the waveform requirements during the moment after the switching signal is removed and before the amplifier regains control of the charging current.

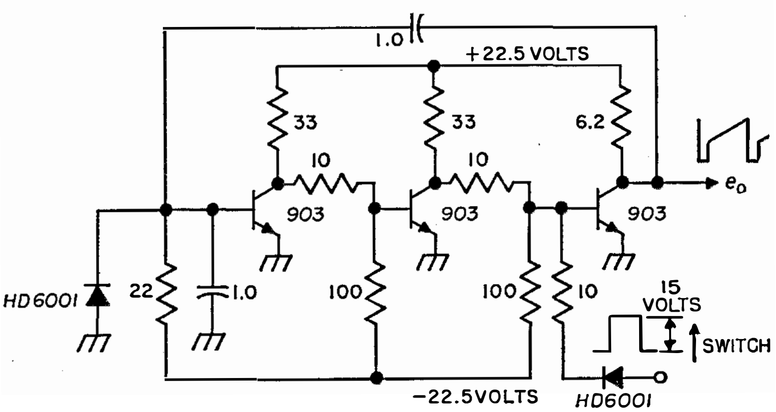

Figure 5—Sweep generator of Miller integrator type using transistors. Resistance values are in kilohms and capacitance in microfarads.

2. *Amplitude Comparator*[4]

A highly stable and useful comparator circuit is shown in Figure 6. A bridge feedback return circuit serves the function of switching the polarity of feedback very rapidly as input *2* crosses the value of input *1*. When the feedback exceeds a small positive amount, the active portion of the circuit functions as a blocking oscillator through diode *D2* and bypass *C2*.

The fact that the diode bridge circuit is capacitively coupled to the blocking oscillator (the coupling capacitor serves also as the blocking capacitor) means that the accuracy of comparison is a function of the gain of the active device and quite insensitive to variation of operating point. This is quite important when considering transistors, since the element voltage drops at given current flows can vary by many

---

[4] Reference 1, pages 343–345.

millivolts over a 60-degree temperature range and from unit to unit. Of course, the same is true for semiconductor diodes, but, since at the firing point the diode currents are nearly equal, the variation of diode voltage drops with temperature cancel to a considerable degree of accuracy. The amount of total diode current is controlled by the supply resistor *R*. This fixes the dynamic resistance of the diodes at the firing point since the dynamic resistance is primarily a function of current flow. Using silicon junction diodes, Hughes type *HD6005*, the temperature stability is shown in Figure 7.

The particular pair of diodes used were selected by matching the room-temperature forward drop to within ± 5 millivolts at one-half the current supplied by *R*, in this case 5 microamperes. Actually, over half of the diodes in a batch of 20 were within this deviation from the average. It is expected better results could be achieved with diodes matched over an extended temperature range. Variations in the difference firing voltage encountered when changing transistors amounted to 5 millivolts or so, provided a few really unsuitable units were excluded.

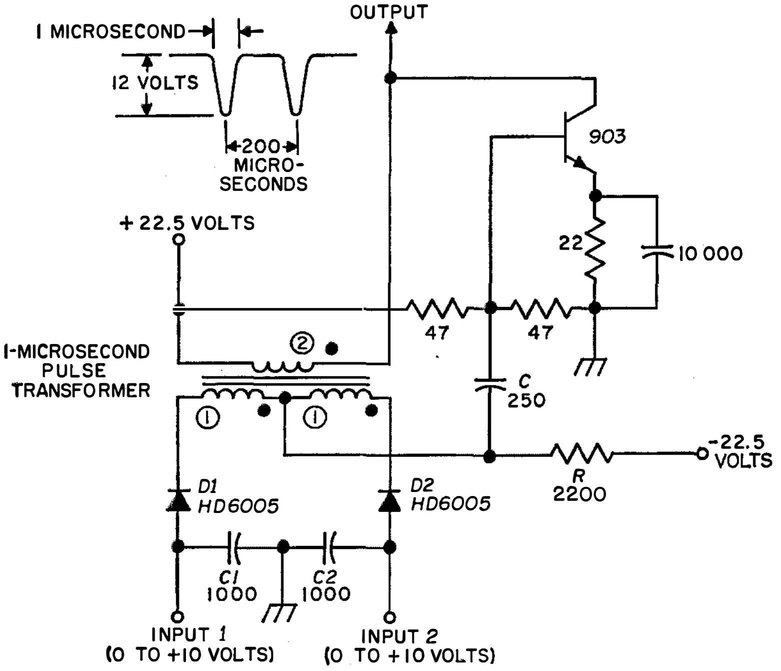

Figure 6—Diode bridge comparator. Resistance values are in kilohms and capacitance in micromicrofarads.

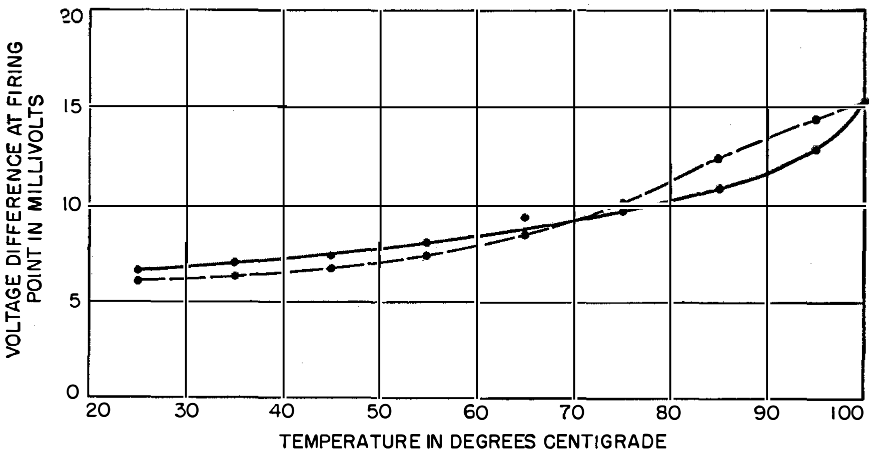

Figure 7—Temperature stability of the bridge comparator. The solid-line curve is for increasing temperature and the broken-line curve is for decreasing temperature. The cycling schedule was at a rate of one point every 15 minutes.

An analysis of the sensitivity of switching was made assuming that the diode dynamic resistance is given by $r = kT/qI$, where I is the current flow through the diode. The results indicate the transformer turns ratio ought to be more like 5:1:1 instead of the 2:1:1 shown. It also predicts that the optimum diode supply current is that which, if it flowed in a single diode, would cause the dynamic resistance of the diode to be the geometric mean of the transistor input and output resistances. More precisely, the optimum diode dynamic resistance is $r = (1/n)(\Delta Z)^{1/2}$, where ΔZ is the determinant of the open-circuit small-signal parameters of the transistor configuration and n is the step-down ratio of the transformer. The optimum is very broad and not much sensitivity is lost for mismatches of 3:1 either way.

The two input terminals have distinctly different characteristics when viewed as loads on other circuits. Input *2*, the input to the diode that, when cut off, assures a stable circuit, has the property of drawing a negligible current until the firing point is approached, at which time its current increases rapidly (factor of $e = 2.718$ about every 26 millivolts) up to something in excess of one-half the supply current. At this point, the circuit fires and a relatively heavy current drain results, although the average current never exceeds the supply current.

The other input presents a nearly constant drain until the circuit fires, at which time it becomes negligibly small.

Recent Telecommunication Development

Radiation Counter Tubes

THE PROBLEMS of detecting alpha, beta, gamma, and cosmic rays under various conditions have brought forth an astonishing array of counter tubes. Some use glass and others metal for the envelope and even mica windows are found in certain tubes.

Representative examples of the large range of counter tubes manufactured under license from the French "Atomic Energy" by Laboratoire Central de Télécommunications in Paris may be seen in the accompanying picture.

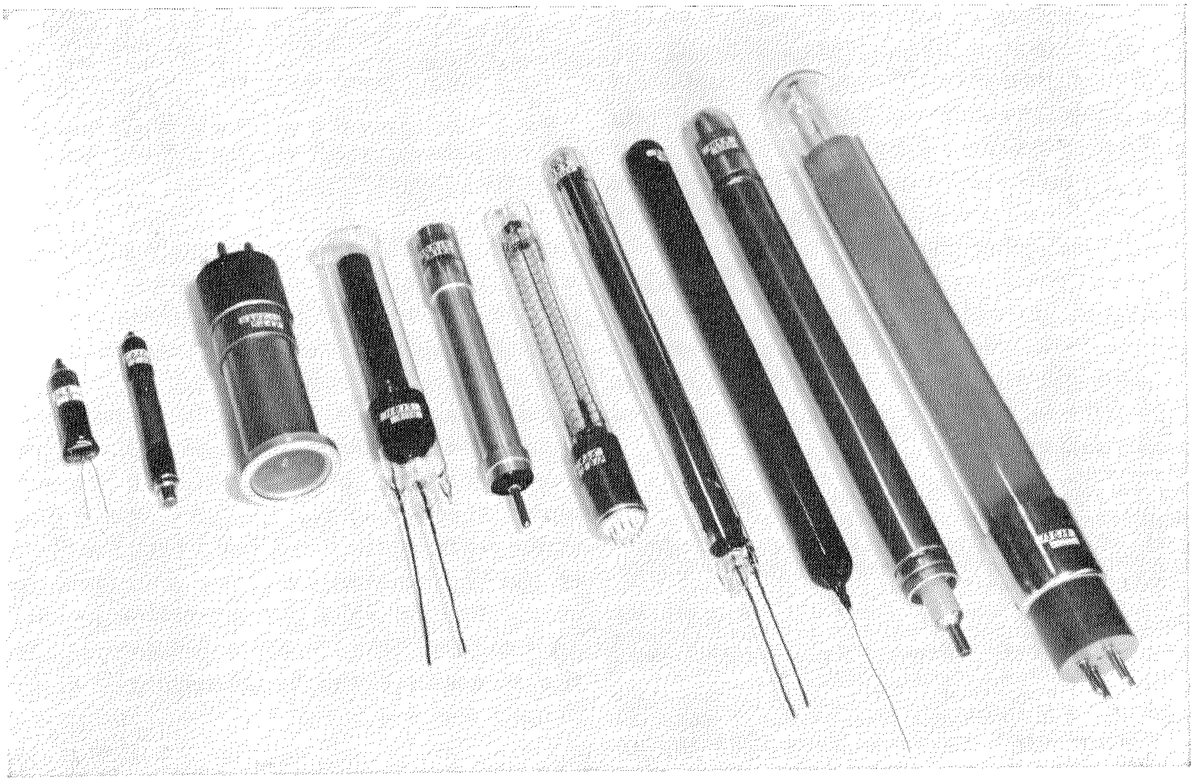

Capacitance of Shielded Balanced-Pair Transmission Line

By A. W. GENT

Standard Telephones and Cables, Limited; London, England

BY APPLICATION of the method of images, a neat and concise formula is derived for the capacitance of a shielded balanced-pair transmission line. The capacitance of an unscreened balanced pair in a circular cylinder of dielectric whose permittivity differs from that of the surrounding medium is also derived. The formula is compared with and shown to be valid over a wider range of the variables than those derived by Green, Curtis, and Mead; Craggs and Tranter; and Meinke.

• • •

The capacitance of a shielded balanced pair has been the subject of previous calculations by Green, Curtis, and Mead[1] and by Kaden.[2] The slightly more general case of an unshielded balanced pair within a circular insulating medium that in turn is immersed in another medium has been treated by Craggs and Tranter[3] and by Meinke.[4] Each of these makes a different approach to the problem. Green, Curtis, and Mead start from the solution of Laplace's equation for a circular cylinder; Craggs and Tranter start from a Fourier series expression for the charge on a conductor; while Kaden and Meinke both use the method of images.

In this paper use will be made of the method of images, but whereas Kaden and Meinke each used a single reflection, multiple reflections will be used here without however complicating the final formula, which is remarkable for its simplicity and accuracy.

1. *Image System and Potential Function*

The configuration under consideration is shown in Figure 1. Two circular wires each of radius b are separated by a distance $2s$ between their centres. The wires are symmetrically placed within a dielectric cylinder of radius c and permittivity K_2 and this in turn is immersed in an infinitely extended medium of permittivity K_1 (Metre-Kilogram-Second System).

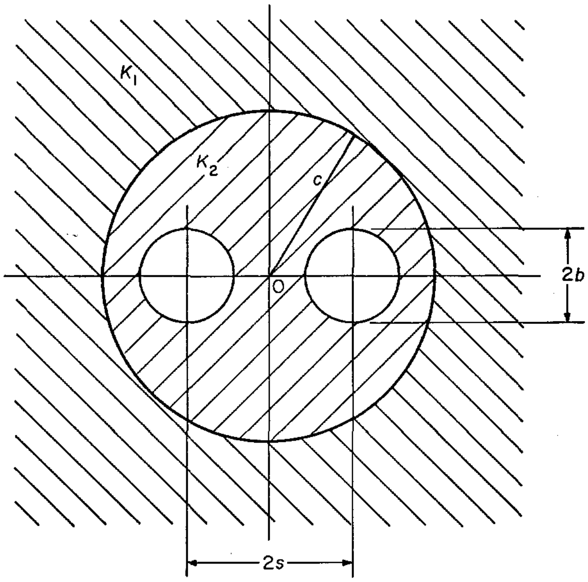

Figure 1—Configuration of two wires symmetrically placed in a circular cylinder of permittivity K_2 that is immersed in a medium of permittivity K_1.

First locate two equal and opposite line charges, one in each wire of strength $\pm q$ coulombs per metre. The location of these charges is a point of some importance. Kaden located them at the centre of the wires, but a better choice is at the limiting points of a set of a family of coaxal circles of which the contours of the wires are members (Figure 2). From the known properties of coaxal circles, if the separation of the limiting points is $2a$ then

$$a^2 = s^2 - b^2. \qquad (1)$$

---

[1] E. I. Green, H. E. Curtis, and S. P. Mead, United States Patent 2 034 032; March 17, 1936.

[2] H. Kaden, "Die Dampfung und Laufzeit von Breitbandkabeln," *Archiv fur Elektrotechnik*, volume 30, pages 691–712; November, 1936.

[3] J. W. Craggs and C. J. Tranter, "Capacity of Two-Dimensional Systems of Conductors and Dielectrics with Circular Boundaries," *Quarterly Journal of Mathematics* (Oxford), volume 17, pages 138–144; 1946.

[4] H. H. Meinke, "Die Doppelleitung und der Sternvierer im zylindrisch begrenzten Dielektrikum," *Elektrische Nachrichten-Technik*, volume 17, pages 108–115; May, 1940.

With charges ±q located at these points the potential function is given by

$$W = V + jU = \frac{-q}{2\pi K_2} \ln \frac{z-a}{z+a}. \qquad (2)$$

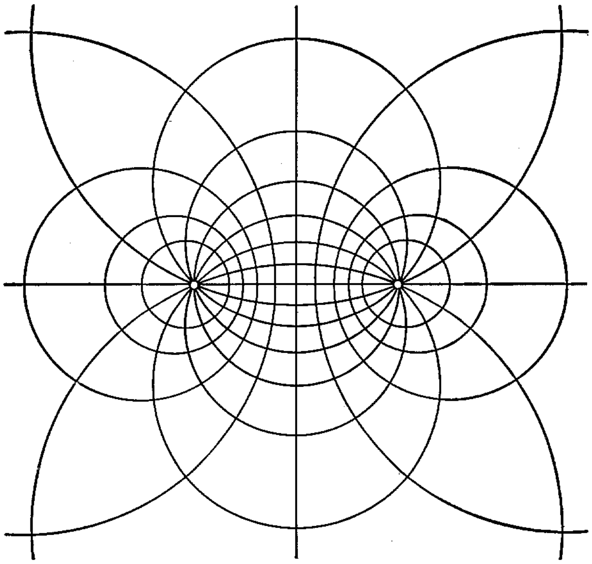

Figure 2—System of coaxal circles of which two coincide with the wire contours.

It is easy to see that the wire surfaces are equipotentials. For on putting $z = b \exp j\theta$ in (2)

$$V = \frac{-q}{2\pi K_2} \ln \left| \frac{s - a + b \exp j\theta}{s + a + b \exp j\theta} \right|$$

$$= \frac{-q}{4\pi K_2} \ln \frac{(s-a)^2 + b^2 + 2b(s-a)\cos\theta}{(s+a)^2 + b^2 + 2b(s+a)\cos\theta}$$

and on substituting the value of b from (1) into this

$$V = \frac{-q}{4\pi K_2} \ln \frac{s-a}{s+a},$$

which is independent of θ, so that the wire surface is an equipotential as required. The potential between the wires is $2V$, so that the capacitance C is given by

$$\frac{1}{C} = \frac{2V}{q} = \frac{1}{\pi K_2} \ln \frac{s + (s^2 - b^2)^{1/2}}{b},$$

metre per farad

on using (1) again. This may be rewritten

$$\frac{1}{C} = \frac{1}{\pi K_2} \cosh^{-1} \frac{s}{b}, \text{ metre per farad,} \qquad (3)$$

which is a well-known expression for the capacitance of a balanced pair in free space.[5]

This arrangement of charges does not, of course, give the correct potential on the outer cylinder of radius c. Images are taken to obtain the correct potential on this cylinder. The image of a line charge in a cylindrical dielectric boundary is given by Smythe.[6] It is also given by Meinke.[4] The image of the charge q located at a consists of a charge

$$q' = \frac{K_2 - K_1}{K_2 + K_1} q$$

at c^2/a together with a charge $-q'$ at 0 (Figure 3), while the image of $-q$ at $-a$ consists of charge $-q'$ at $-c^2/a$, together with a charge of $+q'$ at 0. The two charges $-q'$ and $+q'$ at 0 cancel, and $\pm q$ at $\pm c^2/a$ is left. The potential

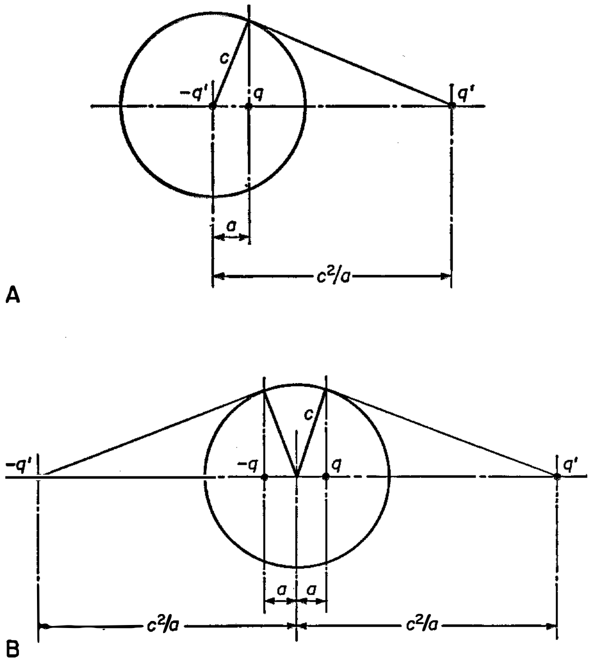

Figure 3—A is the image of a line charge in a dielectric cylinder. B is the images of two symmetrically placed line charges in a dielectric cylinder. The images at the centre cancel.

---

[5] S. S. Attwood, "Electric and Magnetic Fields," John Wiley & Sons, New York, New York; 1941: page 81.

[6] W. R. Smythe, "Static and Dynamic Electricity," McGraw-Hill Book Company, Incorporated, New York, New York; 1939: page 67.

function is now

$$W=\frac{-q}{2\pi K_2}\ln\frac{z-a}{s-a}-\frac{q}{2\pi K_2}\frac{K_2-K_1}{K_2+K_1}\ln\frac{z-c^2/a}{z+c^2/a}\tag{4}$$

These images in the dielectric cylindrical boundary have disturbed the potential on the wires. Images of $\pm q'$ in each wire are therefore taken. This gives four images

$$\pm q' \text{ at } \pm(sc^2-a^3)/(c^2-as),$$
$$\mp q' \text{ at } \pm(sc^2+a^3)/(c^2+as),$$

where the ± signs in each line are associated. Now take the images of the charges in one wire in the other wire. This gives four more images

$$\pm q' \text{ at } \pm\frac{s^2c^2+a^2c^2-2a^3s}{2sc^2-a^3-as^2},$$
$$\mp q' \text{ at } \mp\frac{s^2c^2+a^2c^2+2a^3s}{2sc^2+a^3+as^2}$$

The process of taking images should continue indefinitely, but in this case shall be stopped at this point (Figure 4). The potential function is

$$W=\frac{-q}{2\pi K_2}\ln\frac{z-a}{z+a}-\frac{q}{2\pi K_2}\frac{K_2-K_1}{K_2+K_1}\ln\left\{\frac{az-c^2}{az+c^2}\,\frac{(c^2-as)z+(sc^2-a^3)}{(c^2-as)z-(sc^2-a^3)}\,\frac{(c^2+as)z-(sc^2+a^3)}{(c^2+as)z+(sc^2+a^3)}\right.$$
$$\left.\times\frac{(2sc^2-a^3-as^2)z+(s^2c^2+a^2c^2-2a^3s)}{(2sc^2-a^3-as^2)z-(s^2c^2+a^2c^2-2a^3s)}\,\frac{(2sc^2+a^3+as^2)z-(s^2c^2+a^2c^2+2a^3s)}{(2sc^2+a^3+as^2)z+(s^2c^2+a^2c^2+2a^3s)}\right\}.\tag{5}$$

To find the capacitance put $z = s - b$ and take $2V/q = 1/C$. Then, on making use of (1) and after some reduction

$$\frac{\pi K_2}{C}=\ln\frac{s+(s^2-b^2)^{1/2}}{b}$$
$$+\frac{K_2-K_1}{K_2+K_1}\ln\frac{c^2+s(s^2-b^2)^{1/2}}{c^2-s(s^2-b^2)}$$
$$=\cosh^{-1}\frac{s}{b}+2\frac{K_2-K_1}{K_2+K_1}\tanh^{-1}\frac{s(s^2-b^2)^{1/2}}{c^2}.\tag{6}$$

From this, the capacitance of a screened pair can be deduced by taking the limit $K_1 \rightarrow \infty$. This gives

$$\frac{\pi K_2}{C}=\cosh^{-1}\frac{s}{b}-2\tanh^{-1}\frac{s(s^2-b^2)^{1/2}}{c^2}$$
$$=\ln\left\{\frac{s+(s^2-b^2)^{1/2}}{b}\,\frac{c^2-s(s^2-b^2)^{1/2}}{c^2+s(s^2-b^2)^{1/2}}\right\}.\tag{7}$$

2. *Comparison with Other Formulae*

Notice first that for $s = b$, that is, when the wires are touching, (6) and (7) give infinite capacitance, as they should. Also as the radius of the shield $c \rightarrow \infty$, the formulae reduce to the expression for the capacitance of a pair in free space, as they should.

The expression obtained by Green, Curtis, and Mead[1] for the capacitance of a pair within a metallic shield is, in the notation of this paper,

$$\frac{\pi K_2}{C}=\ln\left\{\frac{2s}{b}\,\frac{1-s^2/c^2}{1+s^2/c^2}\right\}$$
$$-\frac{1+4(s/b)^2}{16\,(s/b)^4}(1-4s^2/c^2).\tag{8}$$

This compares with (7).

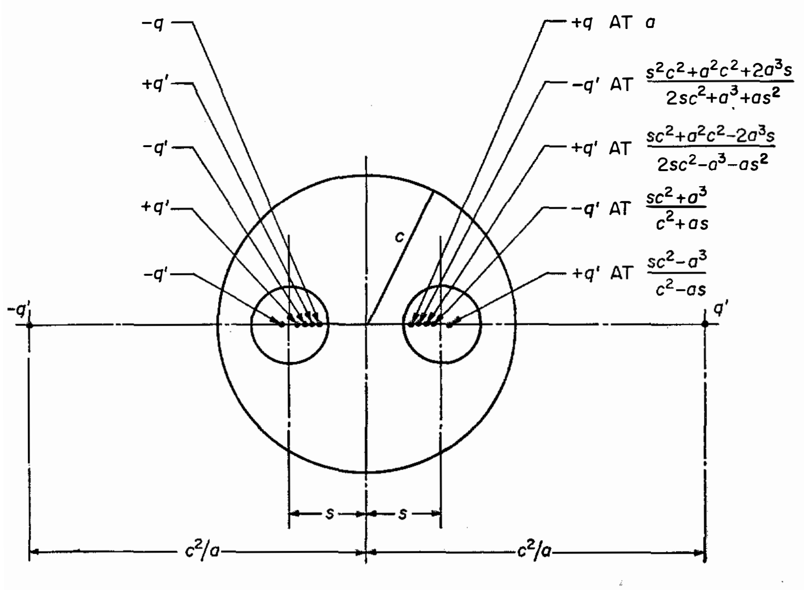

Figure 4—Final system of images for balanced-pair transmission line.

Craggs and Tranter[3] find an infinite determinant to which approximations may be made by partitioning off finite determinants. Their expression in the notation of this paper is

$$\begin{vmatrix} \frac{\pi K_2}{C} + \ln\left(\frac{b}{2s}\right) - \frac{K_2 - K_1}{K_2 + K_1} \ln \frac{c^2 + s^2}{c^2 - s^2} & a_1\left(\frac{b}{s}\right) & a_2\left(\frac{b}{s}\right)^2 & \cdots \\ \frac{-a_1}{1}\left(\frac{b}{s}\right) & 1 + A_{11}\left(\frac{b}{s}\right)^2 & A_{21}\left(\frac{b}{s}\right)^3 & \cdots \\ \frac{-a_2}{2}\left(\frac{b}{s}\right)^2 & A_{12}\left(\frac{b}{s}\right)^3 & 1 + A_{22}\left(\frac{b}{s}\right)^4 & \cdots \\ \cdots & \cdots & \cdots & \cdots \\ \cdots & \cdots & \cdots & \cdots \end{vmatrix} = 0.$$

---

where a_n and A_{nm} are defined in the original paper.

The first approximation, obtained by simply taking the first term in the leading diagonal, is

$$\frac{\pi K_2}{C} = \ln \frac{2s}{b} + \frac{K_2 - K_1}{K_2 + K_1} \ln \frac{c^2 + s^2}{c^2 - s^2}. \tag{9}$$

The second approximation obtained by taking the first two rows and first two columns is

$$\frac{\pi K_2}{C} = \ln \frac{2s}{b} + \frac{K_2 - K_1}{K_2 + K_1} \ln \frac{c^2 + s^2}{c^2 - s^2} - \frac{\frac{1}{4}\left(1 - \frac{4c^2 s^2}{c^4 - s^4}\right)^2 \left(\frac{b}{s}\right)^2}{1 - \left\{\frac{1}{4} - 2\frac{K_2 - K_1}{K_2 + K_1}\left(\frac{s}{c}\right)^2 \frac{c^4 + s^4}{c^4 - s^4}\right\}\left(\frac{b}{s}\right)^2}. \tag{10}$$

Meinke[4] finds an expression, which in the present notation is

$$\frac{\pi K_2}{C} = \ln \frac{2s}{b} - \frac{1}{4}\left(\frac{b}{s}\right)^2 + \frac{K_2 - K_1}{K_2 + K_1} \ln \frac{c^2 + s^2}{c^2 - s^2}, \tag{11}$$

together with the following restrictions for 3-per-cent accuracy on capacitance:

$$\frac{b}{s} \leqslant 0{\cdot}6$$

1. $\frac{b+s}{c} \leqslant 0{\cdot}65; \frac{b}{c} \leqslant 0{\cdot}25;$ K_1 and K_2 arbitrary.
2. $\frac{b+s}{c} \leqslant 0{\cdot}8; \frac{b}{c} \leqslant 0{\cdot}15;$ K_1 and K_2 arbitrary.
3. $\frac{b+s}{c} \leqslant 0{\cdot}8; 0{\cdot}15 \leqslant \frac{b}{c} \leqslant 0{\cdot}2; 0{\cdot}1 \leqslant \frac{K_2}{K_1} \leqslant 10$
4. $\frac{b+s}{c} \leqslant 0{\cdot}8; 0{\cdot}2 \leqslant \frac{b}{c} \leqslant 0{\cdot}25; 0{\cdot}15 \leqslant \frac{K_2}{K_1} \leqslant 6.$

Equations (9), (10), and (11) are to be compared with (6), but to get a comparison with (8) $K_1 \rightarrow \infty$ in (10) is taken.

$$\frac{\pi K_2}{C} = \ln \frac{2s}{b} - \ln \frac{c^2 + s^2}{c^2 - s^2} - \frac{\frac{1}{4}\left(1 - \frac{4c^2 s^2}{c^4 - s^4}\right)^2 \left(\frac{b}{s}\right)^2}{1 - \left\{\frac{1}{4} + 2\left(\frac{s}{c}\right)^2 \frac{c^4 + s^4}{c^4 - s^4}\right\}\left(\frac{b}{s}\right)^2}. \tag{12}$$

While for this case Meinke gives

$$\frac{\pi K_2}{C} = \ln \frac{2s}{b} - \ln \frac{c^2 + s^2}{c^2 - s^2} \tag{13}$$

with (for 3-per-cent accuracy on the capacitance)

$$\frac{b}{c} \leqslant 0{\cdot}25; \quad 0{\cdot}6 \leqslant \frac{s+b}{C} \leqslant 0{\cdot}85.$$

This is the same as the first approximation (9) of Craggs and Tranter with $K_1 \rightarrow \infty$. Attwood[5] also shows this result on page 144. A comparison will therefore be made of (7), (8), (12), and (13).

The comparison is conveniently made by tabulating the expressions as double-entry tables in b/s and s/c. Each of these quantities can vary between 0 and 1, but there is a limitation that occurs when the wires touch the shield. As a requirement

$$s + b \leqslant c$$

or

$$\frac{s}{c}\left(1 + \frac{b}{s}\right) \leqslant 1 \tag{14}$$

Entries that do not satisfy this inequality are not physically possible, and have been left blank in the tables.

Entries have only been made in Table 4 for values of b, c, and s satisfying the inequalities

$$\frac{b}{s} \leqslant 0{\cdot}6; \quad \frac{b}{c} \leqslant 0{\cdot}25; \quad 0{\cdot}6 \leqslant \frac{s+b}{c} \leqslant 0{\cdot}85.$$

In Table 1 the first row, $s/c = 0$, is a table of $\cosh^{-1}(s/b)$, and this is known to be correct. Tables 2 and 3 agree for small b/s, but become considerably in error as b/s approaches unity.

TABLE 1

$\pi K_2/C$: METHOD OF IMAGES (7)

b/s s/c	0·1	0·2	0·3	0·4	0·5	0·6	0·7	0·8	0·9	1·0
0·0	2·993	2·292	1·874	1·567	1·317	1·099	0·896	0·693	0·467	0
0·1	2·973	2·273	1·855	1·548	1·300	1·083	0·881	0·681	0·458	0
0·2	2·914	2·214	1·798	1·494	1·248	1·035	0·838	0·645	0·432	0
0·3	2·814	2·116	1·702	1·401	1·161	0·954	0·767	0·585	0·389	0
0·4	2·672	1·976	1·566	1·271	1·038	0·841	0·666	0·500	0·328	0
0·5	2·485	1·792	1·387	1·100	*0·877*	*0·693*	*0·535*	*0·391*	*0·248*	0
0·6	2·244	1·555	*1·158*	*0·881*	*0·672*	*0·506*	—	—	—	—
0·7	1·927	*1·246*	*0·860*	*0·600*	—	—	—	—	—	—
0·8	*1·488*	*0·819*	—	—	—	—	—	—	—	—
0·9	*0·762*	—	—	—	—	—	—	—	—	—

TABLE 2

$\pi K_2/C$: GREEN, CURTIS, AND MEAD (8)

b/s s/c	0·1	0·2	0·3	0·4	0·5	0·6	0·7	0·8	0·9	1·0
0·0	2·993	2·292	1·874	1·568	1·320	1·106	*0·912*	*0·731*	*0·555*	*0·381*
0·1	2·973	2·273	1·855	1·549	1·302	1·090	*0·898*	*0·718*	*0·545*	*0·373*
0·2	2·914	2·214	1·798	1·494	1·250	1·042	*0·854*	*0·680*	*0·514*	*0·351*
0·3	2·814	2·116	1·702	1·402	1·163	0·961	*0·781*	*0·617*	*0·462*	*0·313*
0·4	2·672	1·976	1·566	1·272	1·040	0·846	*0·678*	*0·527*	*0·388*	*0·258*
0·5	2·485	1·792	1·386	1·099	*0·875*	*0·693*	*0·539*	*0·405*	*0·288*	*0·182*
0·6	2·243	1·553	*1·153*	*0·874*	*0·662*	*0·493*	—	—	—	—
0·7	1·926	*1·240*	*0·847*	*0·577*	—	—	—	—	—	—
0·8	*1·483*	*0·802*	—	—	—	—	—	—	—	—
0·9	*0·747*	—	—	—	—	—	—	—	—	—

TABLE 3

$\pi K_2/C$: CRAGGS AND TRANTER SECOND-ORDER APPROXMATION (12)

b/s s/c	0·1	0·2	0·3	0·4	0·5	0·6	0·7	0·8	0·9	1·0
0·0	2·993	2·292	1·874	1·568	1·320	1·105	*0·910*	*0·726*	*0·545*	*0·360*
0·1	2·973	2·273	1·856	1·551	1·304	1·092	*0·900*	*0·718*	*0·540*	*0·358*
0·2	2·914	2·215	1·801	1·500	1·258	*1·052*	*0·867*	*0·693*	*0·524*	*0·350*
0·3	2·814	2·118	1·707	1·412	*1·177*	*0·980*	*0·806*	*0·646*	*0·491*	*0·333*
0·4	2·673	1·979	1·572	1·281	*1·055*	*0·868*	*0·707*	*0·563*	*0·430*	*0·298*
0·5	2·485	1·792	1·386	1·098	*0·875*	*0·693*	*0·538*	*0·404*	*0·285*	*0·175*
0·6	2·241	1·544	1·132	0·834	*0·592*	*0·377*	—	—	—	—
0·7	1·917	1·203	*0·754*	*0·377*	—	—	—	—	—	—
0·8	1·450	*0·644*	—	—	—	—	—	—	—	—
0·9	*0·512*	—	—	—	—	—	—	—	—	—

When $b/s = 1$, the two wires are touching, and the reciprocal of the capacitance should vanish. The end column in Table 1 is seen to be correct, while the end column in both Tables 2 and 3 is incorrect.

Since the first row and the end column in Table 1 are correct, it is reasonable to suppose from continuity that adjacent rows and columns are good approximations. On the other hand, at the limit $s + b = c$, the reciprocal of the capacitance should again vanish, and this is not so in any of the tables. If the tables are in error for these values it may reasonably be concluded that they are in error at entries near these values. Those entries in Tables 1, 2 and 3, where it seems reasonable to suppose on present evidence that the error in the entry is greater than 1 per cent, are printed in italics. Meinke's equation is seen to be correct within the limits claimed, except for a doubtful value at $b/s = 0{\cdot}6$, $s/c = 0{\cdot}4$.

It will be seen that (7) has a greater range of validity than the other approximations.

TABLE 4

$\pi K_2/C$: MEINKE'S (13)

s/c \ b/s	0·1	0·2	0·3	0·4	0·5	0·6
0·4	—	—	—	—	1·064	0·881
0·5	—	1·792	1·386	1·099	0·875	0·693
0·6	2·242	1·549	1·143	0·856	—	—
0·7	1·924	1·230	—	—	—	—

3. *Maximization of Impedance*

The characteristic impedance Z_0 of a transmission line at very high frequencies is

$$\begin{aligned} Z_0 &= (L/C)^{1/2} \\ &= 1/vC, \end{aligned}$$

where v is the velocity of propagation in the line. For a shielded balanced pair, (7) gives

$$\begin{aligned} Z_0 = \frac{120}{k^{1/2}} \Big\{ & \cosh^{-1}\frac{s}{b} \\ & - 2\tanh^{-1} s\,\frac{(s^2-b^2)^{1/2}}{c^2}\Big\}, \text{ ohms} \quad (15) \\ = \frac{120}{k^{1/2}} \ln \Big\{ & \frac{s + (s^2-b^2)^{1/2}}{b} \\ & \times \frac{c^2 - s(s^2-b^2)^{1/2}}{c^2 + s(s^2-b^2)^{1/2}}\Big\} \text{ ohms,} \end{aligned}$$

where k is the permittivity of the dielectric relative to vacuum.

If the radius of the shield c is fixed, and the radius of the wires b is also fixed, while the spacing s is varied, Z_0 has a maximum that is easily found on differentiation of (15) to be given by

$$s^4 - (b^2 + 4c^2)s^2 + 2b^2c^2 + c^4 = 0. \quad (16)$$

The physically possible solution of this is given by

$$2s^2 = b^2 + 4c^2 - (b^4 + 12c^4)^{1/2}. \quad (17)$$

The expression is homogeneous in s, b, c and can be regarded as giving s/c in terms of b/c. The results are tabulated in Table 5.

TABLE 5

OPTIMIZATION OF CABLE DIMENSIONS

b/c	s/c	b/c	Maximum	Z_0 (ohms) Polythene
0·05	0·5188	0·0964	2·481	196·3
0·10	0·5224	0·1914	1·788	141·5
0·15	0·5284	0·2839	1·383	109·4
0·20	0·5365	0·3728	1·096	86·7
0·25	0·5467	0·4573	0·874	69·2
0·30	0·5589	0·5368	0·694	54·9
0·35	0·5728	0·6110	0·544	43·0
0·40	0·5883	0·6799	0·416	32·9

To use this table, if a wire radius b and a sheath radius c are given, the quotient b/c is formed and the table is entered at the appropriate point in the first column. The second column then gives s/c, and thus s knowing c. The third column b/s is given to facilitate comparison with Table 1, where s/c and b/s are the variables. The fourth column, headed maximum, is the corresponding maximum value of the bracketed expression in (15). The maximum value of Z_0 for polythene insulation, $k = 2{\cdot}3$ is given in the fifth column. It may be noted that as $b/c \rightarrow 0$

$$\frac{s}{c} \rightarrow \frac{3^{1/2} - 1}{2^{1/2}} = 0{\cdot}5176,$$

which is useful when interpolating near the beginning of the table.

The later entries may be in error, since here we are approaching the limiting case.

$$\frac{s}{c}\left(1 + \frac{b}{s}\right) \simeq 1$$

where the expression (7) is not reliable.

4. Conclusion

The method of images has been used to provide an equation for the capacitance of a shielded balanced pair (7), which is concise and valid over a greater range of the variables than other known equations. Equation (6) for an unshielded balanced pair in a dielectric cylinder immersed in another medium is probably valid over the same range of the variables.

5. Acknowledgment

The author is indebted to Dr. W. W. Macalpine for some helpful suggestions and criticisms of the manuscript.

Recent Telecommunication Development

International Symposium and Exhibition on Automation

The National Research Council organized a symposium on scientific, engineering, social, and economic aspects of automation in Milan, Italy, on April 8–13, 1956. Engineers of Fabbrica Apparecchiature per Comunicazioni Elettriche Standard, Standard Telecommunication Laboratories, and Compagnie Générale de Constructions Téléphoniques contributed papers to the meeting.

Face Standard participated also in the exhibition sponsored by the Associazione Nationale Industrie Elettrotecniche. The photograph shows C. Roda, left, and C. Della Rocca, right, showing samples of printed circuits to Giovanni Gronchi president of Italy.

Telephone Statistics of the World*

FOR THE SEVENTH consecutive year, 5 million telephones were added throughout the world, making a total of 94.5 million on January 1, 1955. More than half of the world's telephones were in the United States, where some 4900 privately owned and operated systems gave service to almost one out of every three individuals. In Europe, which had some 29 percent of the world's telephones, mostly under public operation, there was a telephone for roughly one out of every 20 individuals.

For the purpose of this compilation, only those telephones that can be connected to a commercial public system are counted. Twelve countries reported more than 1 million telephones in service on January 1, 1955; United States, United Kingdom, Canada, Western Germany, France, Japan, Sweden, Italy, Australia, Switzerland, Argentina and the Netherlands. Of the world's principal countries, 8 had more than 15 telephones per 100 of the population: United States (31.2), Sweden (29.0), Canada (25.1), New Zealand (23.3), Switzerland (23.1), Denmark (19.5), Australia (16.8), and Norway (16.4).

New York, with more telephones than any other city, had almost twice as many as Greater London, which ranked second. On a per-capita basis, Washington, District of Columbia, led among the world's large cities with 61.7 telephones per 100 population and Stockholm, Sweden, was first outside the United States with 53.3.

A subdivision in certain of the tables shows the number of telephones operated under private and government ownership. The latter category has reference to municipal and state, as well as national, ownership. Although the American Telephone and Telegraph Company and its subsidiaries operated about 82 percent of the United States' 52 806 476 telephones on January 1, 1955, there were almost 5000 other privately owned companies that furnished service in the United States.

The statistics in this compilation are based on questionnaires sent to the telephone administrations of the various countries throughout the world.

TELEPHONES IN CONTINENTAL AREAS

Partly estimated; statistics reported as of other dates have been adjusted to January 1, 1955

Continental Area	Total Telephones			Privately Owned		Automatic (Dial)	
	Number	Percent of Total World	Per 100 Population	Number	Percent of Total	Number	Percent of Total
North America	56 688 800	60.0	31.6	56 107 900	99.0	45 377 100	80.0
Middle America	700 300	0.8	1.2	630 700	90.1	524 500	74.9
South America	2 422 900	2.6	2.0	1 141 500	47.1	1 915 000	79.0
Europe	27 244 200	28.8	4.5	4 335 600	15.9	20 508 600	75.3
Africa	1 247 400	1.3	0.6	23 700	1.9	854 300	68.5
Asia	4 006 900	4.2	0.3	2 897 000	72.3	1 912 800	47.7
Oceania	2 189 500	2.3	15.3	152 100	6.9	1 479 100	67.6
World	94 500 000	100.0	3.7	65 288 500	69.1	72 571 400	76.8
United States	*52 806 476*	*55.9*	*32.2*	*52 806 476*	*100.0*	*42 617 973*	*80.7*

---

* Abridgement from a booklet issued by the American Telephone and Telegraph Company; New York, New York.

TELEPHONES IN COUNTRIES OF THE WORLD AS OF JANUARY 1, 1955

Country	Total Telephones	Per 100 Population	Percent Automatic (Dial)	Ownership	
				Private	Government
NORTH AMERICA					
Alaska	24 712	15.45	76.8	6 632	18 080
Canada	3 857 400	25.05	71	3 294 800	562 600
Greenland	0	—	—	—	—
Saint Pierre and Miquelon	243	4.86	0	0	243
United States	52 806 476	32.21	80.7	52 806 476	0
MIDDLE AMERICA					
Bahamas	6 326	6.88	98.9	0	6 326
Barbados	5 836	2.57	97.5	5 836	0
Bermuda	7 794	18.56	100	7 794	0
British Honduras	950	1.28	0	45	905
Canal Zone (1) (2)	7 011	24.18	100	0	7 011
Costa Rica	10 901	1.17	0	10 808	93
Cuba	141 964	2.37	89.5	141 964	0
Dominican Republic	8 900	0.37	85.6	8 750	150
El Salvador	9 876	0.46	73.8	0	9 876
Guadeloupe and Dependencies	1 513	0.66	0	0	1 513
Guatemala	9 043	0.28	80.5	0	9 043
Haiti	4 293	0.12	91	0	4 293
Honduras	7 200	0.45	59.7	0	7 200
Jamaica and Dependencies	20 080	1.31	97.4	20 080	0
Leeward Islands:					
Antigua	489	0.96	0	0	489
Montserrat	98	0.75	0	0	98
Saint Christopher-Nevis	320	0.61	0	0	320
Virgin Islands (British)	0	—	—	—	—
Total	907	0.73	0	0	907
Martinique	3 464	1.45	68.2	0	3 464
Mexico	348 679	1.16	72.5	346 991	1 688
Netherlands Antilles	7 215	4.05	96.8	0	7 215
Nicaragua (3)	3 600	0.30	0	0	3 600
Panama	18 237	2.06	77.9	17 664	573
Puerto Rico	53 584	2.35	51.5	49 743	3 841
Trinidad and Tobago	20 973	3.00	87.4	20 973	0
Virgin Islands (United States)	2 300	8.52	0	0	2 300
Windward Islands:					
Dominica	307	0.54	0	0	307
Grenada	900	1.10	0	0	900
Saint Lucia	432	0.50	6.9	0	432
Saint Vincent	426	0.60	0	0	426
Total	2 065	0.70	1.5	0	2 065
SOUTH AMERICA					
Argentina	1 080 272	5.71	81.9	78 179	1 002 093
Bolivia (3)	11 400	0.35	94.3	11 400	0
Brazil	745 617	1.30	82.6	745 617	0
British Guiana	4 448	0.97	11.1	0	4 448
Chile	148 239	2.35	69.7	147 739	500
Colombia	143 501	1.15	93.6	0	143 501
Ecuador (3)	12 000	0.33	60.8	1 500	10 500
Falkland Islands and Dependencies	354	16.09	0	0	354
French Guiana (3)	370	1.23	0	0	370
Paraguay (3)	6 000	0.39	86.2	0	6 000
Peru	60 300	0.64	82.3	60 300	0
Surinam	3 186	1.39	90.3	0	3 186
Uruguay (3)	109 300	4.14	75	0	109 300
Venezuela	97 982	1.72	94.1	96 732	1 250
EUROPE					
Albania (3)	2 000	0.16	25	0	2 000
Andorra (3)	100	2.00	0	0	100
Austria	479 386	6.91	83.1	0	479 386
Belgium	830 405	9.39	80.3	0	830 405
Bulgaria (3)	62 000	0.83	43	0	62 000
Channel Islands:					
Guernsey and Dependencies	9 818	21.34	0	0	9 818
Jersey	13 179	23.12	0	0	13 179
Total	22 997	22.33	0	0	22 997
Czechoslovakia (4)	350 708	2.88	59.4	0	350 708
Denmark	864 980	19.46	41.4	761 065	103 915
Finland	433 001	10.27	63.1	341 694	91 307
France	2 945 564	6.88	66.2	0	2 945 564

(1) Excluding telephone systems of the military forces.
(2) June 30, 1954.
(3) Data partly estimated.
(4) January 1, 1948 (latest official statistics).
(4a) January 1, 1948 (latest official statistics); Formosa listed separately.
(5) March 31, 1955.
(6) January 1, 1936 (latest official statistics). On January 1, 1955, nine cities connected.
(7) Includes the Isle of Man, but not the Channel Islands.

Telephones in Countries of the World as of January 1, 1955—*Continued*

Country	Total Telephones	Per 100 Population	Percent Automatic (Dial)	Ownership	
				Private	Government
EUROPE—*Continued*					
Germany:					
Democratic Republic (3)	275 000	1.50	60	0	275 000
Federal Republic	3 445 363	6.92	91.8	0	3 445 363
West Berlin	240 587	11.00	100	0	240 587
Gibraltar	1 685	6.74	100	0	1 685
Greece	109 700	1.38	93.4	0	109 700
Hungary (3)	130 000	1.33	74	0	130 000
Iceland	25 457	16.42	64.8	0	25 457
Ireland	109 734	3.75	68.6	0	109 734
Italy	2 036 788	4.26	94.1	2 036 788	0
Liechtenstein	2 554	18.24	100	0	2 554
Luxemburg	29 861	9.82	75.5	0	29 861
Malta and Gozo (5)	8 218	2.60	0	0	8 218
Monaco	6 174	29.40	100	0	6 174
Netherlands	1 021 202	9.56	94.1	0	1 021 202
Norway (2)	558 074	16.44	62.9	61 799	496 275
Poland (3)	250 000	0.94	68	0	250 000
Portugal	231 373	2.65	61.1	151 264	80 109
Rumania (3)	145 000	0.86	60	0	145 000
Saar	49 491	5.05	100	0	49 491
San Marino	377	2.90	100	0	377
Spain	996 525	3.42	79.6	981 366	15 159
Sweden	2 097 738	28.99	73.2	0	2 097 738
Switzerland	1 141 443	23.06	98.9	0	1 141 443
Turkey	132 465	0.57	81.8	0	132 465
Union Soviet Socialist Republics (6)	861 181	0.52	19.9	0	861 181
United Kingdom (5) (7)	6 483 040	12.74	76.3	0	6 483 040
Yugoslavia (3)	153 000	0.88	70	0	153 000
AFRICA					
Algeria	125 994	1.31	77.2	0	125 994
Anglo-Egyptian Sudan	13 712	0.16	78	0	13 712
Ascension Island	40	25.00	75	40	0
Basutoland	544	0.09	5	0	544
Bechuanaland	156	0.05	0	0	156
Belgian Congo and Ruanda-Urundi	13 604	0.08	62.7	0	13 604
British East Africa:					
Kenya	23 392	0.39	71.8	0	23 392
Tanganyika	9 403	0.11	54.4	0	9 403
Uganda	7 852	0.14	76.2	0	7 852
Total	40 647	0.21	68.6	0	40 647
British West Africa:					
Gambia	454	0.16	99.3	0	454
Gold Coast	11 833	0.27	39.3	0	11 833
Nigeria (3)	16 000	0.05	40	0	16 000
Sierra Leone (3)	1 700	0.08	85	0	1 700
Total (3)	29 987	0.08	43.2	0	29 987
Comoro Islands	0	—	—	—	—
Egypt	141 320	0.62	80.5	0	141 320
Ethiopia and Eritrea	5 825	0.03	68.2	0	5 825
French Cameroon	2 550	0.08	0	0	2 550
French Equatorial Africa	4 470	0.10	40	0	4 470
French Somaliland	592	0.91	0	0	592
French Togoland	758	0.07	0	0	758
French West Africa	19 380	0.11	43	0	19 380
Liberia	621	0.05	100	0	621
Libya	6 523	0.43	78.9	0	6 523
Madagascar	8 614	0.19	45.7	0	8 614
Mauritius and Dependencies	6 497	1.21	7.7	0	6 497
Morocco:					
French Zone	89 538	1.12	80.3	0	89 538
Spanish Zone	8 533	0.82	55.9	8 533	0
Tangier Zone	10 376	5.67	97	10 072	304
Total	108 447	1.18	80	18 605	89 842
Portuguese Africa:					
Angola	2 518	0.06	87	0	2 518
Cape Verde Islands	126	0.08	0	0	126
Mozambique	7 331	0.13	74.6	0	7 331
Portuguese Guinea	274	0.05	0	0	274
South Tome and Principe	285	0.48	0	0	285
Total	10 534	0.10	72.7	0	10 534
Reunion	3 869	1.41	0	0	3 869
Rhodesia and Nyasaland:					
Northern Rhodesia	8 249	0.39	96.6	0	8 249
Nyasaland	2 624	0.10	88.4	0	2 624
Southern Rhodesia	42 372	1.80	79.2	0	42 372
Total	53 245	0.76	82.3	0	53 245

TELEPHONES IN COUNTRIES OF THE WORLD AS OF JANUARY 1, 1955—*Continued*

Country	Total Telephones	Per 100 Population	Percent Automatic (Dial)	Ownership	
				Private	Government
AFRICA—*Continued*					
Saint Helena	87	1.74	0	0	87
Seychelles and Dependencies	128	0.03	100	128	0
Somaliland (Italian Administration)	1 055	0.07	0	0	1 055
Somaliland Protectorate	240	0.04	0	0	240
South West Africa	7 448	1.65	48.2	0	7 448
Spanish Guinea	604	0.29	70.2	604	0
Spanish North Africa	4 336	3.03	58.5	4 336	0
Spanish West Africa:					
Ifni	108	0.24	0	0	108
Spanish Sahara	36	0.07	0	0	36
Total	144	0.15	0	0	144
Swaziland	769	0.38	3.3	0	769
Tunisia	32 215	0.88	58.5	0	32 215
Union of South Africa (5)	613 525	4.50	65.7	0	613 525
Zanzibar and Pemba	1 000	0.37	0	0	1 000
ASIA					
Aden Colony	1 935	1.38	100	0	1 935
Aden Protectorate	0	—	—	—	—
Afghanistan (3)	6 000	0.05	30	0	6 000
Bahrain	1 291	1.15	100	1 291	0
Bhutan	0	—	—	—	—
Brunei	127	0.23	0	0	127
Burma (3)	7 200	0.04	0	0	7 200
Cambodia (3)	1 900	0.05	0	0	1 900
Ceylon	25 943	0.31	95.2	0	25 943
China (4a)	244 028	0.05	72.9	94 945	149 083
Cyprus	8 834	1.71	81.9	0	8 834
Formosa	38 188	0.44	48.3	0	38 188
Hong Kong (2)	46 081	2.05	100	46 081	0
India (5)	245 799	0.07	46.7	2 500	243 299
Indonesia	67 054	0.08	7.2	0	67 054
Iran	51 300	0.25	54.6	0	51 300
Iraq (5)	32 824	0.66	78	0	32 824
Israel	57 178	3.33	92.3	0	57 178
Japan (5)	2 823 314	3.18	41.6	2 823 314	0
Jordan	9 300	0.66	76	0	9 300
Korea, South	36 076	0.16	36.8	0	36 076
Kuwait	1 289	0.76	80.7	1 289	0
Laos	535	0.04	65.4	0	535
Lebanon	33 192	2.39	85.1	0	33 192
Malaya	46 247	0.77	56.6	1 219	45 028
Maldive Islands	0	—	—	—	—
Muscat and Oman	137	0.02	100	137	0
Nepal	0	—	—	—	—
Netherlands New Guinea	957	0.14	0	0	957
North Borneo	1 078	0.29	66	0	1 078
Pakistan	35 006	0.05	64.2	0	35 006
Philippine Republic	52 822	0.24	62.3	42 546	10 276
Portuguese Asia:					
Macao	1 803	0.90	99.5	0	1 803
Portuguese India	234	0.04	0	0	234
Portuguese Timor	357	0.08	0	0	357
Total	2 394	0.19	74.9	0	2 394
Qatar	263	1.32	100	263	0
Ryukyu Islands	10 492	1.34	69.3	0	10 492
Sarawak	720	0.12	0	0	720
Saudi Arabia	8 130	0.12	0	0	8 130
Singapore	32 885	2.76	100	32 885	0
Syria	29 836	0.78	83.4	0	29 836
Thailand	9 420	0.05	100	0	9 420
Trucial Oman	0	—	—	—	—
Viet-Nam	14 823	0.07	44.5	0	14 823
Yemen	0	—	—	—	—
Other Places (3)	34 000	0.34	25	0	34 000
OCEANIA					
American Samoa	323	1.62	100	0	323
Australia	1 530 680	16.84	67	0	1 530 680
Cook Islands	161	2.68	0	78	83
French Oceania:					
French Settlements	761	1.21	0	0	761
New Caledonia and Dependencies	1 989	3.06	0	0	1 989
Total	2 750	2.15	0	0	2 750
Guam	8 703	11.45	94.8	0	8 703
Hawaii	151 845	27.86	97.9	151 845	0
Nauru	0	—	—	—	—
New Hebrides Condominium	170	0.34	0	0	170
New Zealand (5)	496 293	23.29	60.8	0	496 293
Niue Island	55	1.10	0	0	55
Norfolk Island	39	3.90	0	0	39

TELEPHONES IN COUNTRIES OF THE WORLD AS OF JANUARY 1, 1955—*Continued*

Country	Total Telephones	Per 100 Population	Percent Automatic (Dial)	Ownership	
				Private	Government
OCEANIA—*Continued*					
Pacific Islands (British):					
Fiji Islands	3 300	0.99	0	0	3 300
Gilbert and Ellice Islands	100	0.26	74	74	26
Pitcairn Island	0	—	—	—	—
Solomon Islands Protectorate	0	—	—	—	—
Tonga (Friendly) Islands	325	0.65	0	0	325
Total	3 725	0.71	2	74	3 651
Pacific Islands (United States Administration):					
Caroline Islands	178	0.42	0	0	178
Mariana Islands (Less Guam)	250	4.17	0	0	250
Marshall Islands	459	4.17	98	0	459
Total	887	1.50	50.7	0	887
Papua and New Guinea	3 222	0.20	3.2	97	3 125
Tokelau Islands	0	—	—	—	—
Western Samoa	618	0.66	0	0	618

TELEPHONE CONVERSATIONS FOR THE YEAR 1954

Conversation data were not available for all countries

Country	Number of Conversations in Thousands			Conversations Per Capita
	Local	Toll	Total	
Algeria	60 000	22 100	82 100	8.6
Argentina	3 280 300	41 100	3 321 400	177.2
Australia	1 070 400	85 400	1 155 800	128.6
Belgium	464 300	76 300	540 600	61.3
Brazil	2 836 200	44 800	2 881 000	50.5
Canada	6 206 400	137 800	6 344 200	417.5
Ceylon	54 500	4 100	58 600	7.0
Chile	371 700	23 600	395 300	63.4
Colombia	498 200	8 300	506 500	40.9
Cuba	810 000	5 700	815 700	137.1
Denmark	1 050 500	166 000	1 216 500	274.7
Egypt	282 600	12 700	295 300	13.2
Finland	532 700	76 700	609 400	145.4
France	1 608 900	498 400	2 107 300	49.2
Germany, Federal Republic	2 181 800	486 200	2 668 000	53.9
Greece	280 300	5 200	285 500	36.1
Iceland	59 200	1 500	60 700	394.2
Ireland	82 400	13 700	96 100	32.8
Israel	86 200	4 000	90 200	53.3
Italy	3 293 000	203 000*	3 496 000	73.3
Jamaica	44 800	700	45 500	30.0
Japan (1)	9 251 000	618 400	9 869 400	111.9
Luxemburg	10 700	8 900*	19 600	64.5
Malaya	119 800	15 100	134 900	22.9
Mexico	776 000	10 500	786 500	27.3
Morocco	76 500	16 300	92 800	10.1
Netherlands	708 800	231 800	940 600	88.7
Norway (2)	464 100	56 300	520 400	154.1
Peru	223 100	3 400	226 500	24.4
Philippine Republic	360 500	800	361 300	17.0
Portugal	209 700	38 600	248 300	28.6
Puerto Rico	102 900	3 600	106 500	47.0
Saar	63 600	1 300	64 900	66.2
Spain	2 185 000	76 700	2 261 700	78.7
Sweden (3)	2 293 400	125 300	2 418 700	334.3
Switzerland	458 600	385 500*	844 100	171.4
Syria	82 000	5 300	87 300	23.4
Tunisia	18 000	8 100	26 100	7.2
Turkey	188 200	6 400	194 600	8.5
Union of South Africa (1)	753 200	49 700	802 900	59.9
United Kingdom (1) (4)	3 649 900	307 800	3 957 700	78.0
United States	61 615 000	2 270 000	63 885 000	393.2

(1) Year ended March 31, 1955.
(2) Year ended June 30, 1954.
(3) Year ended June 30, 1955.
(4) Includes the Isle of Man, but not the Channel Islands.
* Three-minute units.

United States Patents Issued to International Telephone and Telegraph System; February-April 1956

UNITED STATES patents numbering 38 were issued between February 1 and April 30, 1956 to the indicated companies in the International System. The names of the inventors, subjects of the patents, and Patent Office serial numbers are given below.

M. Amann and K. Knodler, Mix and Genest (Stuttgart), Locking Mechanism for Pneumatic Carriers, 2 736 513.

R. P. Arthur, Kellogg Switchboard and Supply Company, Electromagnetic Counting Device, 2 736 845.

J. W. Augustin, C. Lorenz (Stuttgart), Method and Device for Transmitting Code Signals, 2 737 545.

A. H. W. Beck and A. B. Cutting, Standard Telecommunication Laboratories (London), Cavity Resonators, 2 737 631.

F. Beerbaum, T. Crewe, and K. Steinbuch, Mix and Genest (Stuttgart), Equalizer Arrangement with an Attenuation Characteristic Proportional to Frequency, 2 737 629.

P. K. Chatterjea and A. H. Reeves, Standard Telephones and Cables (London), Multiplex Electric Communication System, 2 740 839.

A. G. Clavier and D. L. Thomas, Federal Telecommunication Laboratories, Filter for Transmission Line, 2 736 866.

D. Dautry, Compagnie Générale de Constructions Téléphoniques (Paris), Electromagnetic Relay, 2 735 910.

J. Davidson, Federal Telephone and Radio Company, Automatic Rural Crossbar Switching System, 2 740 841.

M. den Hertog, Bell Telephone Manufacturing Company (Antwerp), Automatic Telephone Switching System, 2 739 186.

P. E. Dorney and C. P. Majkrzak, Federal Telecommunication Laboratories, Tuning Means for Magnetrons, 2 738 441.

H. F. Engelmann and J. A. Kostriza, Federal Telecommunication Laboratories, Crystal Holder, 2 734 170.

A. W. Gent and R. T. Lawrence, Standard Telephones and Cables (London), Electromagnetic Waveguide Systems, 2 736-863.

F. P. Gohorel, Compagnie Générale de Constructions Téléphoniques (Paris), Automatic Telephone Systems, 2 735 894.

D. D. Grieg, Federal Telecommunication Laboratories, Supports for Transmission Line, 2 737 632.

D. D. Grieg, Federal Telecommunication Laboratories, Band-Pass-Filter System, 2 735-073.

W. Hatton, Federal Telephone and Radio Company, Polarized Magneto Signal Device, 2 740 956.

G. H. Hough and T. M. Jackson, Standard Telephones and Cables (London), Electric Discharge Tubes and Circuits Therefor, 2 740 921.

J. J. Iffland, Capehart-Farnsworth Company, Stabilized Amplifier, 2 741 668.

O. Klein, Süddeutsche Apparatefabrick (Nürnberg), Selenium Rectifier of Increased Blocking Properties, 2 736 672.

E. Kramer, C. Lorenz (Stuttgart), Radio Beacon, 2 736 022.

J. Kruithof, L. J. G. Nys, and J. L. J. Donceel, Bell Telephone Manufacturing Company (Antwerp), Flat Crossbar Switch, 2 740-844.

L. Lewin, A. E. Pethick, and J. B. Setchfield, Standard Telecommunication Laboratories (London), Waveguide Elbow, 2-737 634.

A. Lieb, C. Lorenz (Stuttgart), Electron Tube, 2 735 955.

C. P. Majkrzak, Federal Telecommunication Laboratories, Electron Gun, 2 740 913.

P. H. J. Massaut, Bell Telephone Manufacturing Company (Antwerp), Audio-Frequency Output Amplifier, 2 740 850.

K. A. Matthews and C. deB. White, Standard Telecommunication Laboratories (London), Crystal Triodes, 2 740 076.

M. R. Mauge and J. R. Escande, Le Matériel Téléphonique (Paris), Outgoing-Junction Circuit 2 740 840.

T. S. McLeod, Standard Telecommunication Laboratories (London), Electric Frequency-Modulating Circuits, 2 735 983.

S. Metzger, Federal Telecommunication Laboratories, Pulse-Code Expander, 2 738 463.

W. Miner, Federal Telephone and Radio Company, Telegraph Signal-Operated Carrier Off-and-On System, 2 738 381.

A. J. Montchausse, Compagnie Générale de Constructions Téléphoniques (Paris). Crossbar Commutating Mechanism, 2-740 843.

W. A. Montgomery and A. D. Morgan, Kolster-Brandes (Sidcup), Devices for Focusing an Electron Beam, 2 737 617.

S. Nakano and I. Yosano, Nippon Electric Company (Tokyo), System of Depth Measurement in the Acoustic Fathometer or the Like, 2 736 000.

A. J. Radcliffe, Jr., Kellogg Switchboard and Supply Company, Telephone System Providing Time-Delayed Distinctive Call Signaling, 2 736 886.

L. R. Snyder, Capehart-Farnsworth Company, Mounting Device for Vacuum Tubes, 2 735 636.

F. Vollenschier, Mix and Genest (Stuttgart), Line-Selecting Means in Automatic Telephone Systems, 2 735 895.

E. P. G. Wright and D. A. Weir, Standard Telecommunication Laboratories (London), Telegraph Repeaters, 2 737 544.

Telegraph Repeaters

E. P. G. Wright and D. A. Weir

2 737 544—March 6, 1956

This arrangement provides a telegraph system in which each code combination consists only of a start element and a constant number of information elements, the start element always being of the opposite kind to the immediately preceding signal combination element. There is also provided means for converting this type of signal at a repeater to a type of signal having a start element of invariable type so that it can be received in conventional equipment.

Pulse-Code Expander

S. Metzger

2 738 463—March 13, 1956

An expander for pulse-code-signal receivers so that signals compressed at the transmitting end may be expanded to their normal amplitude differences. A decoder is included for converting the code signals into a corresponding variable-amplitude signal, an amplifier for these variable-amplitude waves, and a device for changing the gain of the amplifier under control of one of the digital pulses of the code group following the first pulse thereof.

Crystal Triodes

K. A. Matthews and C. deB. White

2 740 076—March 27, 1956

A crystal triode of the type generally referred to as a transistor having a main body of semiconducting material and having on one of its surfaces a layer of a given conductivity type, a second layer of opposite conductivity to this first layer, and a base electrode in contact with the main body, the device being provided also with electrodes making rectifying contact with the first and second layers.

Audio-Frequency Output Amplifier

P. H. J. Massaut

2 740 850—April 3, 1956

An amplifier for audio-frequency signals for the purpose of giving high-fidelity amplification to signals having an effectively steep wave front, provided with a voltage feedback circuit from the output to the input of the amplifier in inverse relation to the frequency of the input signals and a current feedback from the output to the input circuit in direct relation to the input signal frequency, to minimize the effect of time delay in the rise and fall in amplitude of pulse signals.

Electric Discharge Tubes and Circuits Therefor

G. H. Hough and T. M. Jackson

2 740 921—April 3, 1956

An electron impulse device for use with multigap counting tubes, designed to have a relatively high input impedance and to respond to electrical impulses of relatively low current level, which comprises a pair of gaseous discharge tubes coupled as a binary-counting trigger circuit so that the gaseous discharge tubes alternate in conduction in response to successively applied pulses. The cathode outputs of these gaseous discharge tubes are coupled to successive electrodes in the multielectrode counting tube so that the discharge in the multielectrode tube will be stepped along these electrodes in succession on operation of the alternate gaseous discharge tubes.

Reference Data for Radio Engineers, Fourth Edition

REFERENCE DATA FOR RADIO ENGINEERS is an extensive compilation of equations, tables, and drawings of basic material that is frequently needed by radio engineers. It is presented as a first place to search for the exact equation or table or graph needed in solving a problem. This fourth edition is divided in the following 38 chapters.

1—Frequency data
2—Units, constants, and conversion factors
3—Properties of materials
4—Components
5—Fundamentals of networks
6—Filters, image-parameter design
7—Filters, modern-network-theory design
8—Filters, simple bandpass design
9—Attenuators
10—Bridges and impedance measurements
11—Iron-core transformers and reactors
12—Rectifiers and filters
13—Magnetic amplifiers
14—Feedback control systems
15—Electron tubes
16—Electron-tube circuits
17—Semiconductors and transistors
18—Transistor circuits
19—Modulation
20—Transmission lines
21—Waveguides and resonators
22—Scattering matrixes
23—Antennas
24—Radio-wave propagation
25—Radio noise and interference
26—Broadcasting
27—Radar fundamentals
28—Wire transmission
29—Electroacoustics
30—Digital computors
31—Nuclear physics
32—Miscellaneous data
33—Information theory
34—Probability and statistics
35—Fourier waveform analysis
36—Maxwell's equations
37—Mathematical formulas
38—Mathematical tables

In the same format as the three previous editions, the book is $8\frac{1}{4}$ by $5\frac{3}{8}$ by $1\frac{5}{8}$ inches (21 by 14 by 4 centimeters) and contains 1150 pages including a 29-page index. There are over 900 drawings and tables.

The former editions, of which over 150,000 copies were sold, were published by Federal Telephone and Radio Company; the new edition is being issued in behalf of all its associate companies by the International Telephone and Telegraph Corporation, Publications Department, 67 Broad Street, New York 4, New York. Books are priced at $6.00 each or in lots of 12 or more to a single address at $4.80 each.

Contributors to This Issue

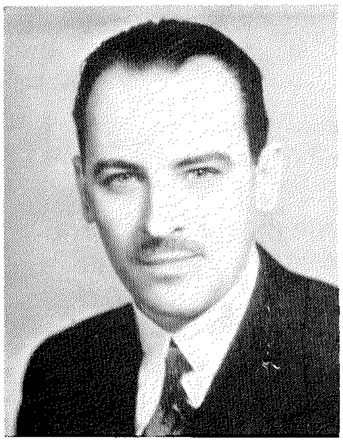

E. M. Deloraine

E. M. Deloraine was born in Paris, France, on May 16, 1898. He received the degrees of Bachelier es Sciences, Ingénieur diplômé de l'Ecole Supérieure de Physique et de Chimie (Paris), and the diploma of Ingénieur Docteur of the Paris University.

He became associated with the London engineering staff of the International Western Electric Company in 1921 and began technical work in connection with wire transmission and radio systems. From 1923 to 1926, he was responsible for part of the developments in Great Britain in connection with the first transatlantic telephone circuit.

Dr. Deloraine was charged with the establishment in Paris of a regional research laboratory in 1927. He was made European technical director of International Standard Electric Corporation in 1933. During this period, he made various contributions in the very-high- and ultra-high-frequency fields and also in the advancement of single-sideband high-frequency communication and high-power broadcasting. Dr. Deloraine further took a special interest in directing experiments in connection with automatic radio direction finders, radio aids to navigation, and in the application of pulse technique to communication systems.

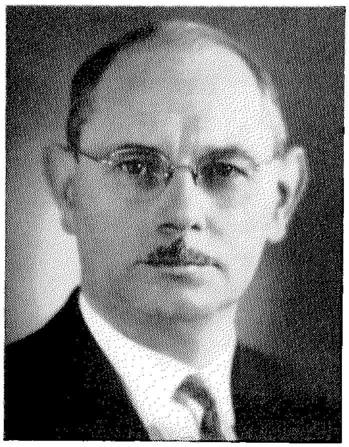

Martinus den Hertog

Dr. Deloraine came to the United States at the end of 1940 to organize a laboratory unit for Federal Telephone and Radio Corporation. This laboratory contributed during the war, in particular, to the development of long-distance detection of airplanes and ships by high-frequency direction finding, also to the development of instrument landing systems.

In 1945, Dr. Deloraine was appointed president of International Telecommunication Laboratories and in 1946 technical director of the International Telephone and Telegraph Corporation as well as vice president and technical director of the International Standard Electric Corporation. He was also appointed vice chairman of Standard Telecommunication Laboratories in England in 1947, president of the Laboratoire Central de Télécommunications in Paris in 1945, and president of The Société Le Matériel Téléphonique in Paris in 1955.

Dr. Deloraine was made Chevalier of the Légion of Honour in 1938 and was promoted to the rank of Officer in 1948. He is a Fellow of the Institute of Radio Engineers and was its vice president in 1946. He is also a Fellow of the American Institute of Electrical Engineers, a Member of the Institution of Electrical Engineers, and of many other scientific societies.

• • •

Martinus den Hertog was born in Utrecht, Netherlands, on February 25th, 1901 and entered the services of Bell Telephone Manufacturing Company at Antwerp as a student engineer in 1921 in the equipment engineering department. He was transferred in 1925 to the automatic-circuit design department of which he became the head in 1933. In this capacity, he has contributed to several important projects in the field of switching systems, such as the rotary automatic toll system, the *7E* rotary system described in this issue, and the mechanoelectronic system. Since 1953, he has been chief engineer for switching systems.

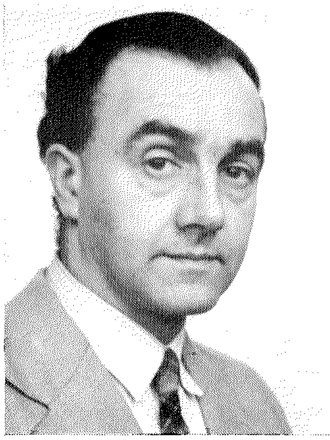

A. W. Gent

• • •

A. W. Gent was born in Manchester, England. He received a B.Sc. degree in

Jakob Kruithof

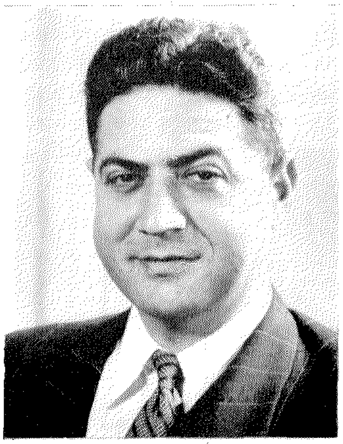

D. J. LeVine

mathematics and physics from the University of Manchester in 1934.

He was in the telephone-cable laboratory of Standard Telephones and Cables in London from 1934 to 1939, being active in the initial development of coaxial cable. He transferred to the valve division and did theoretical work on klystrons until 1945. He then returned to the telephone-cable division and remains on call from the valve division for special problems.

Mr. Gent discusses the capacitance of shielded balanced-pair lines in this issue.

• • •

Jakob Kruithof was born in Rotterdam, Netherlands, on November 6, 1894. He received the degree of Electro-Technical Engineer from Delft Technical High School in Holland in 1922 and of Doctor in Applied Sciences from Ghent University in Belgium in 1945.

Dr. Kruithof is Technical Development Administrator of Bell Telephone Manufacturing Company in Antwerp, Belgium, and Assistant Technical Director of the International Standard Electric Corporation. He reports in this issue on the new *7E* rotary switching system.

Leslie C. Merrill

• • •

D. J. LeVine was born in New York, New York, on October 10, 1921. He received the B.E.E. degree from the School of Technology, College of the City of New York in 1943, and the M.E.E. degree in 1952 from the Polytechnic Institute of Brooklyn.

From 1943 to 1946, he served in the Signal Corps working with radar and pulse-time-modulation microwave relay communications equipment in the United States and Europe. From 1946 to 1948, he was with the Microwave Research Institute, Polytechnic Institute of Brooklyn, working primarily on microwave power measuring devices.

Mr. LeVine joined the Federal Telecommunication Laboratories in 1948, and at present he is working on microwave antennas, switching devices, and associated microwave components. He is an executive engineer in the radio communication laboratory. He is coauthor of a paper describing a microwave phase shifter.

He is an associate of the American Institute of Electrical Engineers and a Member of the Institute of Radio Engineers.

• • •

Leslie C. Merrill was born on July 24, 1926 in Laconia, New Hampshire. He received a B.Sc. degree in physics from the Massachusetts Institute of Technology in 1947.

From 1947 to 1949, he worked on nuclear reactor design at Oak Ridge, Tennessee, for the Fairchild Engine and Airplane Corporation. From then to 1955, he did analog and digital computer work at the Argonne National Laboratory at Lemont, Illinois.

In 1955, Mr. Merrill joined Farnsworth Electronics Company, where he is concerned with systems design. He is coauthor of a paper on the application of transistors to computer circuits.

• • •

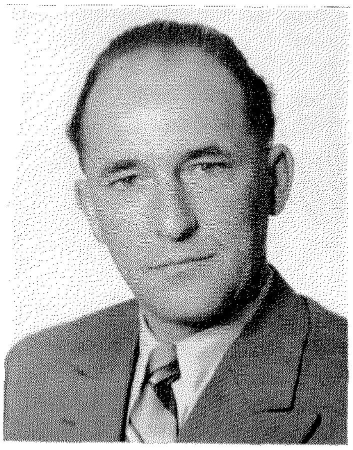

Martin Müller

Martin Müller was born at Lichtenberg (Oberfranken), Germany on April 10, 1921. He received his diploma at the Technical College of Munich, where, in 1953, he also received his Dr. Ing. degree on traveling-wave tubes.

Dr. Müller's practical work began with Telefunken in Ulm in 1950, where he assisted in the development of microwave tubes. In 1953, he joined Standard Central Laboratories of C. Lorenz, Pforzheim.

Dr. Müller now works on the development of microwave radio links. His paper in this issue describes an instrument measuring all 3 components of a magnetic-flux field.

• • •

William Sichak. A photograph and biography of Mr. Sichak, coauthor of

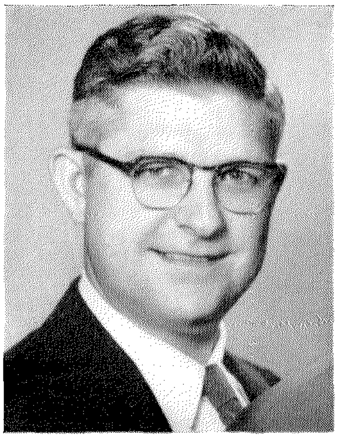

T. L. Slater

the paper on the rotary phase shifter, appears on page 180 of the June, 1956 issue.

• • •

T. L. SLATER was born in Lyons, Ohio, on July 4, 1915. He received a B.S. degree in radio engineering from Indiana Technical College in 1948.

From 1948 to 1954, he was with Capehart-Farnsworth Corporation. After about a year with Fisher Engineering, Incorporated, he rejoined Farnsworth Electronics Company. His work has been on radar, industrial television, infrared devices, transformer design, and data conversion. He is coauthor of a paper on the applications of transistors to computer circuits.

INTERNATIONAL TELEPHONE AND TELEGRAPH CORPORATION

DOMESTIC DIVISIONS, SUBSIDIARIES, AND ASSOCIATES

Farnsworth Electronics Company; Fort Wayne, Ind. *Electronic research, development, and manufacture.*

Federal Telecommunication Laboratories; Nutley, N. J. *Electronic research, development, and manufacture.*

Federal Telephone and Radio Company; Clifton, N. J. *Manufacture of electronic equipment and components.*

Federal Electric Corporation; Lodi, N. J. *Equipment installation, field engineering, service, and maintenance.*

Kuthe Laboratories, Inc.; Newark, N. J. *Manufacture of electronic tubes and switches.*

Kellogg Switchboard and Supply Company; Chicago, Ill. *Manufacture and supply of telephone apparatus and equipment.*

Kellogg Credit Corporation; Chicago, Ill. *Sales financing.*

International Standard Electric Corporation; New York, N. Y. *Holding, management, sales, and licensing overseas* (see below).

International Standard Trading Corporation; New York, N. Y. *Sale of foreign products in U. S. A.*

International Telecommunication Laboratories, Inc.; New York, N. Y. *Research and development coordination.*

International Telephone Building Corporation; New York, N. Y. *Headquarters building.*

American Cable & Radio Corporation (58% owned); New York, N. Y. *Holding and management company for international cable and radiotelegraph system.*

All America Cables and Radio, Inc.; New York, N. Y. *Cable and radiotelegraph service to Central and South America and the West Indies.*

Commercial Cable Company, The; New York, N. Y. *Transatlantic cable telegraph service.*

Mackay Radio and Telegraph Company (Inc.); New York, N. Y. *International and marine radiotelegraph service.*

OVERSEAS RESEARCH, MANUFACTURING, AND SALES COMPANIES

(Subsidiaries of INTERNATIONAL STANDARD ELECTRIC CORPORATION)

British Commonwealth of Nations

ENGLAND—
Standard Telephones and Cables, Limited; London
Kolster-Brandes Limited; Sidcup
Standard Telecommunication Laboratories, Limited; London
Creed and Company, Limited; Croydon

CANADA—
Standard Telephones & Cables Mfg. Co. (Canada), Ltd.; Montreal

AUSTRALIA—
Standard Telephones and Cables Pty. Limited; Sydney
Silovac Electrical Products Pty. Limited; Sydney
Austral Standard Cables Pty. Limited (50% owned); Melbourne

NEW ZEALAND—
New Zealand Electric Totalisators Limited; Wellington

Latin America and West Indies

ARGENTINA—
Compañía Standard Electric Argentina, S.A.I.C.; Buenos Aires
Capehart Argentina (50% owned); Buenos Aires

BRAZIL—
Standard Electrica, S.A.; Rio de Janeiro

CHILE—
Compañía Standard Electric, S.A.C.; Santiago

CUBA—
International Standard Products Corporation; Havana

MEXICO—
Standard Electrica de Mexico, S.A.; Mexico City

PUERTO RICO—
Standard Electric Corporation of Puerto Rico; San Juan

Europe

AUSTRIA—
Vereinigte Telephon- und Telegraphenfabriks A. G., Czeija, Nissl & Co.; Vienna

BELGIUM—
Bell Telephone Manufacturing Company; Antwer

DENMARK—
Standard Electric Aktieselskab; Copenhagen

FINLAND—
Oy Suomen Standard Electric Ab; Helsinki

FRANCE—
Compagnie Générale de Constructions Téléphoniques; Paris
Les Téléimprimeurs; Paris
Laboratoire Central de Télécommunications; Paris
Le Matériel Téléphonique; Paris

GERMANY—
Standard Elektrik A.G.; Stuttgart
Divisions
Mix & Genest; Stuttgart and Berlin
Süddeutsche Apparatefabrik; Nürnberg
C. Lorenz, A.G.; Stuttgart and Berlin
Schaub Apparatebau; Pforzheim
Standard Central Laboratories; Stuttgart

ITALY—
Fabbrica Apparecchiature per Comunicazioni Elettriche Standard S.p.A.; Milan

NETHERLANDS—
Nederlandsche Standard Electric Maatschappij N.V.; The Hague

NORWAY—
Standard Telefon og Kabelfabrik A/S; Oslo

PORTUGAL—
Standard Electrica, S.A.R.L.; Lisbon

SPAIN—
Standard Eléctrica, S.A.; Madrid

SWEDEN—
Standard Radio & Telefon AB; Stockholm

SWITZERLAND—
Standard Téléphone et Radio S.A.; Zurich

TURKEY—
Standard Electric Turk Ltd. (Sirketi); Ankara

ASSOCIATE LICENSEES FOR MANUFACTURE AND SALES

FRANCE—
Lignes Télégraphiques et Téléphoniques; Paris

ITALY—
Società Italiana Reti Telefoniche Interurbane; Milan

JAPAN—
Nippon Electric Company, Limited; Tokyo
Sumitomo Electric Industries, Limited; Osaka

SPAIN—
Marconi Española, S.A.; Madrid

OVERSEAS TELEPHONE AND TELEGRAPH OPERATING COMPANIES

ARGENTINA—

Compañía Internacional de Radio; Buenos Aires. *Radiotelephone and radiotelegraph service.*

Sociedad Anónima Radio Argentina (subsidiary of American Cable & Radio Corporation); Buenos Aires. *Radiotelegraph service.*

BOLIVIA—

Compañía Internacional de Radio Boliviana; La Paz. *Radiotelephone and radiotelegraph service.*

BRAZIL—

Companhia Radio Internacional do Brasil; Rio de Janeiro. *Radiotelephone and radiotelegraph service.*

Companhia Telefônica Nacional; Rio de Janeiro. *Telephone operating system in Paraná and Rio Grande do Sul.*

CHILE—

Compañía de Teléfonos de Chile; Santiago. *Telephone operating system.*

Compañía Internacional de Radio, S.A.; Santiago. *Radiotelephone and radiotelegraph service.*

CUBA—

Cuban American Telephone and Telegraph Company (50% owned); Havana. *United States-Cuba telephone and telegraph service.*

Cuban Telephone Company; Havana. *Telephone operating system.*

Radio Corporation of Cuba; Havana. *Radiotelephone and radiotelegraph service.*

ENGLAND—

International Marine Radio Company Limited; Croydon. *Marine radio equipment, sales, and operation.*

PERU—

Compañía Peruana de Teléfonos Limitada; Lima. *Telephone operating system.*

PUERTO RICO—

Porto Rico Telephone Company; San Juan. *Telephone operating system.*

Radio Corporation of Porto Rico; San Juan. *Radiotelephone service.*

SPAIN—

Compañía Radio Aérea Marítima Española; Madrid. *Marine radio equipment, sales, and operation.*