STUDER A807 MKII

Operating and Service Instructions

Prepared and edited by
Studer Professional Audio GmbH
Technical Documentation
Althardstrasse 30
CH-8105 Regensdorf – Switzerland
http://www.studer.ch

Copyright by Studer Professional Audio GmbH
Printed in Switzerland
Order no. 10.27.1421 (Ed. 0697)

Subject to change

Studer is a registered trade mark of Studer Professional Audio GmbH, Regensdorf

CAUTION
RISK OF ELECTRIC SHOCK
DO NOT OPEN

ATTENTION
RISQUE DE CHOC ELECTRIQUE
NE PAS OUVRIR

ACHTUNG
GEFAHR: ELEKTRISCHER SCHLAG
NICHT ÖFFNEN

To reduce the risk of electric shock, do not remove covers (or back). No user-serviceable parts inside. Refer servicing to qualified service personnel.

Afin de prévenir un choc électrique, ne pas enlever les couvercles (où l'arrière) de l'appareil. Il ne se trouve à l'intérieur aucune pièce pouvant être réparée par l'usager.

Um die Gefahr eines elektrischen Schlages zu vermeiden, entfernen Sie keine Abdeckungen (oder Rückwand). Überlassen Sie die Wartung und Reparatur dem qualifizierten Fachpersonal.

This symbol is intended to alert the user to presence of uninsulated **"dangerous voltage"** within the apparatus that may be of sufficient magnitude to constitute a risk of electric shock to a person.

Ce symbole indique à l'utilisateur qu'il existent à l'intérieur de l'appareil des **"tensions dangereuses"**. Ces tensions élevées entrainent un risque de choc électrique en cas de contact.

Dieses Symbol deutet dem Anwender an, dass im Geräteinnern die Gefahr der Berührung von **"gefährlicher Spannung"** besteht. Die Grösse der Spannung kann zu einem elektrischen Schlag führen.

This symbol is intended to alert the user to the presence of **important instructions** for operating and maintenance in the enclosed documentation.

Ce symbole indique à l'utilisateur que la documentation jointe contient **d'importantes instructions** concernant le fonctionnement et la maintenance.

Dieses Symbol deutet dem Anwender an, dass die beigelegte Dokumentation **wichtige Hinweise** für Betrieb und Wartung beinhaltet.

FIRST AID
(in case of electric shock)

1. Separate the person as quickly as possible from the electric power source:

- by switching off the equipment
- or by unplugging or disconnecting the mains cable
- pushing the person away from the power source by using dry insulating material (such as wood or plastic).
- After having sustained an electric shock, always consult a doctor.

PREMIERS SECOURS
(en cas d'électrocution)

1. Si la personne est dans l'impossibilité de se libérer:

- Couper l'interrupteur principal
- Couper le courant
- Repousser la personne de l'appareil à l'aide d'un objet en matière non conductrice (matière plastique ou bois)
- Après une électrocution, consulter un médecin.

ERSTE HILFE
(bei Stromunfällen)

1. Bei einem Stromunfall die betroffene Person so rasch wie möglich vom Strom trennen:

- Durch Ausschalten des Gerätes
- Ziehen oder Unterbrechen der Netzzuleitung
- Betroffene Person mit isoliertem Material (Holz, Kunststoff) von der Gefahrenquelle wegstossen
- Nach einem Stromunfall sollte immer ein Arzt aufgesucht werden.

WARNING!

DO NOT TOUCH THE PERSON OR HIS CLOTHING BEFORE THE POWER IS TURNED OFF, OTHERWISE YOU STAND THE RISK OF SUSTAINING AN ELECTRIC SHOCK AS WELL!

ATTENTION!

NE JAMAIS TOUCHER UNE PERSONNE QUI EST SOUS TENSION, SOUS PEINE DE SUBIR EGALEMENT UNE ELECTROCUTION.

ACHTUNG!

EINE UNTER SPANNUNG STEHENDE PERSON DARF NICHT BERÜHRT WERDEN. SIE KÖNNEN DABEI SELBST ELEKTRISIERT WERDEN!

2. If the person is unconscious

- check the pulse,
- reanimate the person if respiration is poor,
- lay the body down and turn it to one side, call for a doctor immediately.

2. En cas de perte de connaissance de la personne électrocutée:

- Controller le pouls
- Si nécessaire, pratiquer la respiration artificielle
- Placer l'accidenté sur le flanc et consulter un médecin.

2. Bei Bewusstlosigkeit des Verunfallten:

- Puls kontrollieren,
- bei ausgesetzter Atmung künstlich beatmen,
- Seitenlagerung des Verunfallten vornehmen und Arzt verständigen.

Installation, Betrieb und Entsorgung

Vor der Installation des Gerätes müssen die hier aufgeführten und auch die weiter in dieser Anleitung mit ⚠ bezeichneten Hinweise gelesen und während der Installation und des Betriebes beachtet werden. Das Gerät und sein Zubehör ist auf allfällige Transportschäden zu untersuchen.
Ein Gerät, das mechanische Beschädigung aufweist oder in welches Flüssigkeit oder Gegenstände eingedrungen sind, darf nicht ans Netz angeschlossen oder muss sofort durch Ziehen des Netzsteckers vom Netz getrennt werden. Das Öffnen und Instandsetzen des Gerätes darf nur vom Fachpersonal unter Einhaltung der geltenden Vorschriften durchgeführt werden.

Falls dem Gerät kein konfektioniertes Netzkabel beiliegt, muss dieses durch eine Fachperson unter Verwendung der mitgelieferten Kabel-Gerätesteckdose IEC320/C13 oder IEC320/C19 und unter Berücksichtigung der einschlägigen, im geweiligen Lande geltenden Bestimmungen angefertigt werden, siehe Bild unten.
Vor Anschluss des Netzkabels an die Netzsteckdose muss überprüft werden, ob die Stromversorgungs- und Anschlusswerte des Gerätes (Netzspannung, Netzfrequenz) innerhalb der erlaubten Toleranzen liegen. Die im Gerät eingesetzten Sicherungen müssen den am Gerät angebrachten Angaben entsprechen.
Ein Gerät mit einem dreipoligen Gerätestecker (Gerät der Schutzklasse I) muss an eine dreipolige Netzsteckdose angeschlossen und somit das Gerätegehäuse mit dem Schutzleiter der Netzinstallation verbunden werden (Für Dänemark gelten Starkstrombestimmungen, Abschnitt 107).

Installation, Operation, and Waste Disposal

Before you install the equipment, please read and adhere to the following recommendations and all sections of these instructions marked with ⚠ .

Check the equipment for any transport damage.

A unit that is mechanically damaged or which has been penetrated by liquids or foreign objects must not be connected to the AC power outlet or must be immediately disconnected by unplugging the power cable. Repairs must only be performed by trained personnel in accordance with the applicable regulations.

Should the equipment be delivered without a matching mains cable, the latter has to be prepared by a trained person using the attached female plug (IEC320/C13 or IEC320/C19) with respect to the applicable regulations in your country - see diagram below.

Before connecting the equipment to the AC power outlet, check that the local line voltage matches the equipment rating (voltage, frequency) within the admissible tolerance. The equipment fuses must be rated in accordance with the specifications on the equipment.

Equipment supplied with a 3-pole appliance inlet (equipment conforming to protection class I) must be connected to a 3-pole AC power outlet so that the equipment cabinet is connected to the protective earth conductor of the AC supply (for Denmark the Heavy Current Regulations, Section 107, are applicable).

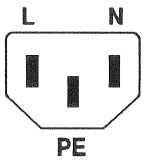

IEC 320 / C13

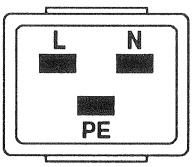

IEC 320 / C19

Female plug (IEC320), view from contact side:

L ..... live; brown	National American Standard:	black
N ..... neutral; blue		white
PE .... protective earth; green and yellow		green

Connecteur femelle (IEC320), vue de la face aux contacts:

L.....phase, brun	Standard National Américain:	noir
N.....neutre, bleu		blanc
PE....terre protective; vert et jaune		vert

Ansicht auf Steckkontakte der Kabel-Gerätesteckdose (IEC320):

L.....Polleiter, braun	USA-Standard:	schwarz
N.....Neutralleiter, hellblau		weiss
PE....Schutzleiter, gelb/grün		grün

Bei der Installation des Gerätes muss **vermieden** werden, dass:

- das Gerät Regen, Feuchtigkeit, direkter Sonneneinstrahlung oder übermäßiger Wärmestrahlung von Wärmequellen (Heizgeräte, Heizungen, Spotlampen) ausgesetzt wird
- die für den Betrieb des Gerätes benötigte Luftzirkulation beeinträchtigt und dadurch die zulässige maximale Lufttemperatur der Geräteumgebung überschritten wird (Wärmestau)
- die Belüftungsöffnungen des Gerätes blockiert oder abgedeckt werden.

Das Gerät und seine Verpackung darf nur sachgerecht entsorgt werden. Alle Teile des Gerätes, die gefährliche Stoffe (Quecksilber, Cadmium) enthalten, müssen als Sondermüll behandelt werden.

Verbrauchte Batterien und Akkumulatoren müssen dem Hersteller zur Entsorgung zurückgegeben oder entsprechend den spezifischen Bestimmungen Ihres Landes fachgerecht entsorgt werden.

Wartung und Reparatur

Durch Entfernen von Gehäuseteilen, Abschirmungen etc. werden stromführende Teile freigelegt. Aus diesem Grund müssen u.a. die folgenden Grundsätze beachtet werden:
Eingriffe in das Gerät dürfen nur von Fachpersonal unter Einhaltung der geltenden Vorschriften vorgenommen werden.
Vor Entfernen von Gehäuseteilen muss das Gerät ausgeschaltet und vom Netz getrennt werden.
Bei geöffnetem, vom Netz getrenntem Gerät dürfen Teile mit gefährlichen Ladungen (z. B. Kondensatoren, Bildröhren) erst nach kontrollierter Entladung, heiße Bauteile (Leistungshalbleiter, Kühlkörper etc.) erst nach deren Abkühlen berührt werden.

Bei Wartungsarbeiten am geöffneten, unter Netzspannung stehenden Gerät dürfen blanke Schaltungsteile und metallene Halbleitergehäuse weder direkt noch mit einem nichtisolierten Werkzeug berührt werden.
Zusätzliche Gefahren bestehen bei unsachgemässer Handhabung besonderer Komponenten:

- **Explosionsgefahr** bei Lithiumzellen, Elektrolyt-Kondensatoren und Leistungshalbleitern
- **Implosionsgefahr** bei evakuierten Anzeigeeinheiten
- **Strahlungsgefahr** bei Lasereinheiten (nichtionisierend), Bildröhren (ionisierend)
- **Verätzungsgefahr** bei Anzeigeeinheiten (LCD) und Komponenten mit flüssigem Elektrolyt.

Solche Komponenten dürfen nur von dafür ausgebildetem Fachpersonal unter Verwendung von vorgeschriebenen Schutzmitteln (u.a. Schutzbrille, Handschuhe) gehandhabt werden.

The equipment installation **must satisfy** the following requirements:

- Protection against rain, humidity, direct solar irradiation or strong thermal radiation from heat sources (heaters, radiators, spotlights).
- Unobstructed air circulation so that the maximum air temperature in the equipment environment will not be exceeded (no heat accumulation).
- Ventilation louvers of the equipment must not be blocked or covered.

The equipment and its packing materials should ultimately be disposed off in accordance with the applicable regulations. All parts of the equipment that contain hazardous substances (mercury, cadmium) must be treated as toxic waste.
Weak batteries or exhausted rechargeable batteries must be returned to the manufacturer for competent disposal or must be disposed of in accordance with the environmental protection regulations applicable for your country.

Maintenance and Repair

The removal of housing parts, shields, etc. exposes energized parts. For this reason the following precautions should be observed:
Maintenance should only be performed by trained personnel in accordance with the applicable regulations.
The equipment should be switched off and disconnected from the AC power outlet before any housing parts are removed.
Even after the equipment has been disconnected from the power, parts with hazardous charges (e.g. capacitors, picture tubes) should only be touched after they have been properly discharged. Hot components (power semiconductors, heat sinks, etc.) should only be touched after they have cooled off.

If maintenance is performed on a unit that is opened and switched on, no uninsulated circuit components and metallic semiconductor housings should be touched neither with your bare hands nor with uninsulated tools.
Certain components pose additional hazards:

- **Explosion hazard** from lithium batteries, electrolytic capacitors and power semiconductors
- **Implosion hazard** from evacuated display units
- **Radiation hazard** from laser units (non-ionizing), picture tubes (ionizing)
- **Caustic effect** of display units (LCD) and such components containig liquid electrolyte.

Such components should only be handled by trained personnel who are properly protected (e.g. by goggles, gloves).

Für Wartung und Reparatur der sicherheitsrelevanten Teile des Gerätes darf nur Ersatzmaterial nach Herstellerspezifikation verwendet werden.

Das Gerät muss ordnungsgemäß und regelmäßig gewartet und somit in sicherem Zustand erhalten werden. Bei ungenügender Wartung oder bei Änderungen der sicherheitsrelevanten Teile des Gerätes erlischt die entsprechende Produktehaftung des Herstellers.

For maintenance work and repair on components that influence the equipment safety, only replacement material conforming to the manufacturer's specifications may be used.

The equipment should be properly serviced in regular intervals and be maintained in safe operating condition. If the equipment is not properly maintained or if any modifications are made to components that influence safety, the manufacturer's product liability gets void.

Elektrostatische Entladung (ESD) bei Wartung und Reparatur

Electrostatic Discharge (ESD) during Maintenance and Repair

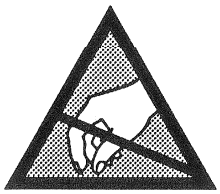

ATTENTION: **Observe precautions for handling devices sensitive to electrostatic discharge!**

ATTENTION: **Respecter les précautions d'usage concernant la manipulation de composants sensibles à l'électricité statique.**

ACHTUNG: **Vorsichtsmassnahmen bei Handhabung elektrostatisch entladungsgefährdeter Bauelemente beachten!**

Viele ICs und andere Halbleiter sind empfindlich gegen elektrostatische Entladung (ESD). Unfachgerechte Behandlung von Baugruppen mit solchen Komponenten bei Wartung und Reparatur kann deren Lebensdauer drastisch vermindern.
Bei der Handhabung der ESD-empfindlichen Komponenten sind u.a. folgende Regeln zu beachten:

- ESD-empfindliche Komponenten dürfen ausschliesslich in dafür bestimmten und bezeichneten Verpakkungen gelagert und transportiert werden.
- Unverpackte ESD-empfindliche Komponenten dürfen nur in den dafür eingerichteten Schutzzonen (EPA, z.B. Gebiet für Feldservice, Reparatur- oder Serviceplatz) gehandhabt und nur von Personen berührt werden, die durch ein Handgelenkband mit Serienwiderstand mit dem Massepotential des Reparatur- oder Serviceplatzes verbunden sind. Das gewartete oder reparierte Gerät wie auch Werkzeuge, Hilfsmittel, EPA-taugliche (elektrisch halbleitende) Arbeits-, Ablage- und Bodenmatten müssen ebenfalls mit diesem Potential verbunden sein.
- Die Anschlüsse der ESD-empfindlichen Komponenten dürfen unkontrolliert weder mit elektrostatisch aufladbaren (Gefahr von Spannungsdurchschlag), noch mit metallischen Oberflächen (Schockentladungsgefahr) in Berührung kommen.
- Um undefinierte transiente Beanspruchung der Komponenten und deren eventuelle Beschädigung durch unerlaubte Spannung oder Ausgleichsströme zu vermeiden, dürfen elektrische Verbindungen nur am abgeschalteten Gerät und nach dem Abbau allfälliger Kondensatorladungen hergestellt oder getrennt werden.

Many ICs and semiconductors are sensitive to electrostatic discharge (ESD). The life of components containing such elements can be drastically reduced by improper handling during maintenance and repair work.

Please observe the following rules when handling ESD sensitive components:

- ESD sensitive components should only be stored and transported in the packing material specifically provided for this purpose.
- Unpacked ESD sensitive components should only be handled in ESD protected areas (EPA, e.g. area for field service, repair or service bench) and only be touched by persons who wear a wristlet that is connected to the ground potential of the repair or service bench by a series resistor. The equipment to be repaired or serviced and all tools, aids, electrically semiconducting work, storage and floor mats should also be connected to this ground potential.
- The terminals of ESD sensitive components must not come in uncontrolled contact with electrostatically chargeable (voltage puncture) or metallic surfaces (discharge shock hazard).
- To prevent undefined transient stress of the components and possible damage due to inadmissible voltages or compensation currents, electrical connections should only be established or separated when the equipment is switched off and after any capacitor charges have decayed.

SMD-Bauelemente

Der Austausch von SMD-Bauelementen ist ausschliesslich geübten Fachleuten vorbehalten. Für verwüstete Platinen können keine Ersatzansprüche geltend gemacht werden. Beispiele für korrekte und falsche SMD-Lötverbindungen in der Abbildung weiter unten.

Bei Studer werden keine handelsüblichen SMD-Teile bewirtschaftet. Für Reparaturen sind die notwendigen Bauteile lokal zu beschaffen. Die Spezifikationen aller Komponenten finden Sie in den Positionslisten im Schemateil.
Spezialkomponenten sind in der Positionsliste mit einer Artikelnummer versehen und können bei Studer unter dieser Nummer bezogen werden.

SMD Components

SMDs should only be replaced by skilled specialists. No warranty claims will be accepted for circuit boards that have been ruined. Proper and improper SMD soldering joints are depicted below.

Studer does not keep any commercially available SMDs in stock. For repairs the corresponding devices should be purchased locally. The specifications of all components can be found in the parts lists in the diagram section.

Special components having a part number in the parts list can be ordered from Studer by specifying this number.

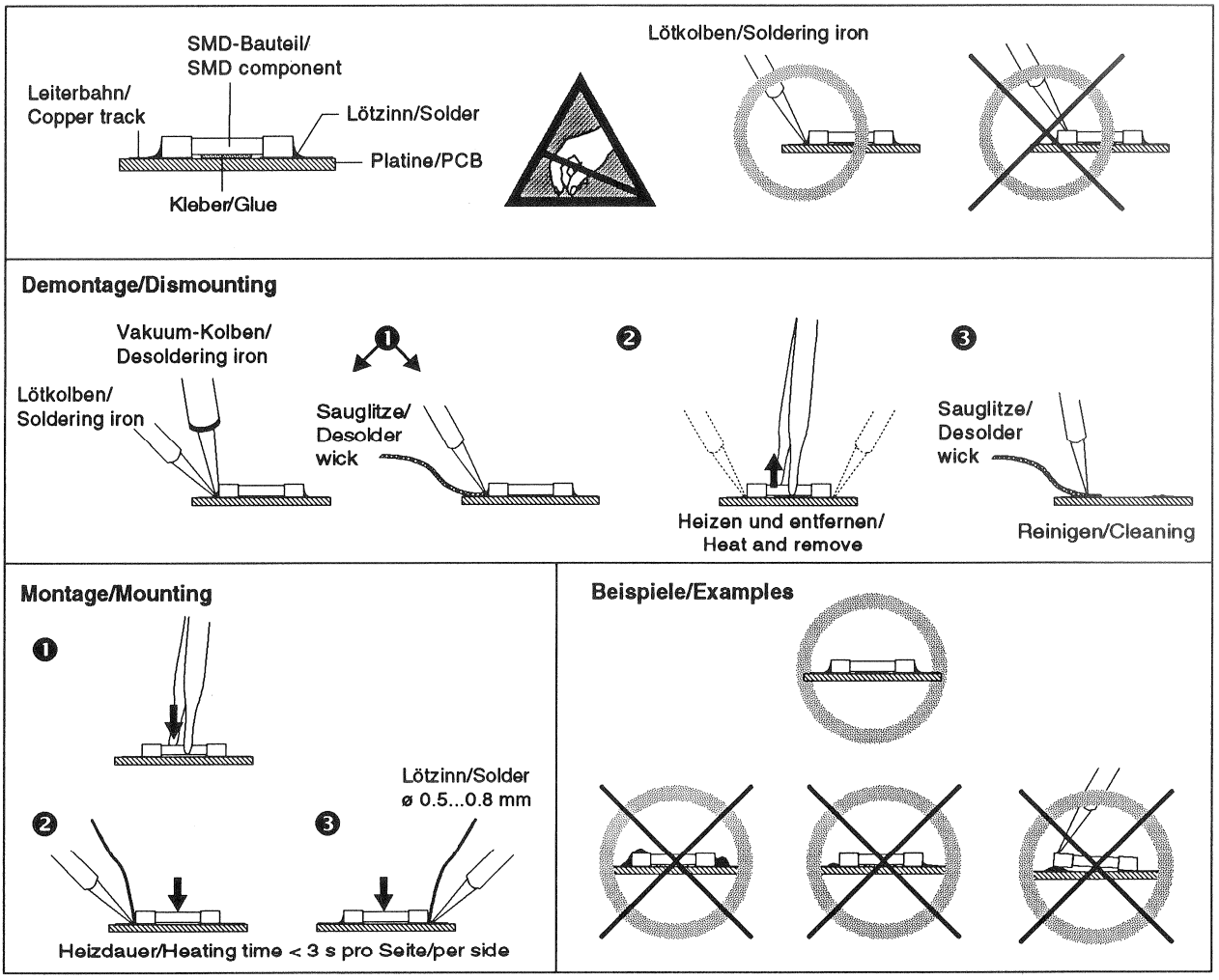

Störstrahlung und Störfestigkeit

Das Gerät entspricht den Schutzanforderungen auf dem Gebiet der elektromagnetischen Phänomene, die u.a. in den Richtlinien 89/336/EWG und FCC, Part 15, aufgeführt sind :

1. Die vom Gerät erzeugten elektromagnetischen Aussendungen sind soweit begrenzt, dass ein bestimmungsgemässer Betrieb anderer Geräte und Systeme möglich ist.
2. Das Gerät weist eine angemessene Festigkeit gegen elektromagnetische Störungen auf, so dass sein bestimmungsgemässer Betrieb möglich ist.

Das Gerät wurde getestet und erfüllt die Bedingungen der im Kapitel "Technische Daten" aufgeführten EMV-Standards. Die Limiten dieser Standards gewährleisten mit einer angemessenen Wahrscheinlichkeit sowohl einen Schutz der Umgebung wie auch entsprechende Störfestigkeit des Gerätes. Eine absolute Garantie, dass keine unerlaubte elektromagnetische Beeinträchtigung während des Gerätebetriebes entsteht, ist jedoch nicht gegeben.

Um die Wahrscheinlichkeit solcher Beeinträchtigung weitgehend auszuschliessen, sind u.a. folgende Massnahmen zu beachten:

- Installieren Sie das Gerät gemäss den Angaben in der Bedienungsanleitung, und verwenden Sie das mitgelieferte Zubehör.
- Verwenden Sie im System und in der Umgebung, in denen das Gerät eingesetzt ist, nur Komponenten (Anlagen, Geräte), die ihrerseits die Anforderungen der obenerwähnten Standards erfüllen.
- Sehen Sie ein Erdungskonzept des Systems vor, das sowohl die Sicherheitsanforderungen (die Erdung der Geräte gemäss Schutzklasse I mit einem Schutzleiter muss gewährleistet sein), wie auch die EMV-Belange berücksichtigt. Bei der Entscheidung zwischen stern- oder flächenförmiger bzw. kombinierter Erdung sind Vor- und Nachteile gegeneinander abzuwägen.
- Benutzen Sie abgeschirmte Kabel für die Verbindungen, für welche eine Abschirmung vorgesehen ist. Achten Sie auf einwandfreie, grossflächige, korrosionsbeständige Verbindung der Abschirmung zum entsprechenden Steckeranschluss bzw. zum Steckergehäuse. Beachten Sie, dass eine nur an einem Ende angeschlossene Kabelabschirmung als Sende- bzw. Empfangsantenne wirken kann (z.B. bei wirksamer Kabellänge von 5 m oberhalb von 10 MHz), und dass die Flanken der digitalen Kommunikationssignale hochfrequente Aussendungen verursachen (z.B. LS- oder HC-Logik bis 30 MHz).
- Vermeiden Sie Bildung von Stromschleifen oder vermindern Sie deren unerwünschte Auswirkung, indem Sie deren Fläche möglichst klein halten und den darin fliessenden Strom durch Einfügen einer Impedanz (z.B. Gleichtaktdrossel) reduzieren.

Electromagnetic Compatibility

The equipment conforms to the protection requirements relevant to electromagnetic phenomena that are listed in the guidelines 89/336/EC and FCC, part 15.

1. The electromagnetic interference generated by the equipment is limited in such a way that other equipment and systems can be operated normally.
2. The equipment is adequately protected against electromagnetic interference so that it can operate correctly.

The equipment has been tested and conforms to the EMC standards applicable to residential, commercial and light industry, as listed in the section "Technical Data". The limits of these standards reasonably ensure protection of the environment and corresponding noise immunity of the equipment. However, it is not absolutely warranted that the equipment will not be adversely affected by electromagnetic interference during operation.

To minimize the probability of electromagnetic interference as far as possible, the following recommendations should be followed:

- Install the equipment in accordance with the operating instructions. Use the supplied accessories.
- In the system and in the vicinity where the equipment is installed, use only components (systems, equipment) that also fulfill the above EMC standards.
- Use a system grounding concept that satisfies the safety requirements (protection class I equipment must be connected with a protective ground conductor) that also takes into consideration the EMC requirements. When deciding between radial, surface or combined grounding, the advantages and disadvantages should be carefully evaluated in each case.
- Use shielded cables where shielding is specified. The connection of the shield to the corresponding connector terminal or housing should have a large surface and be corrosion-proof. Please note that a cable shield connected only single-ended can act as a transmitting or receiving antenna (e.g. with an effective cable length of 5 m, the frequency is above 10 MHz) and that the edges of the digital communication signals cause high-frequency radiation (e.g. LS or HC logic up to 30 MHz).
- Avoid current loops or reduce their adverse effects by keeping the loop surface as small as possible, and reduce the noise current flowing through the loop by inserting an additional impedance (e.g. common-mode rejection choke).

Class A Equipment - FCC Notice

This equipment has been tested and found to comply with the limits for a Class A digital device, pursuant to Part 15 of the FCC Rules. These limits are designed to provide a reasonable protection against harmful interference when the equipment is operated in a commercial environment. This equipment generates, uses, and can radiate radio frequency energy and, if not installed and used in accordance with the instruction manual, may cause harmful interference to radio communications. Operation of this equipment in a residential area is likely to cause harmful interference in which case the user will be required to correct the interference at his own expense.

Caution:
Any changes or modifications not expressly approved by the manufacturer could void the user's authority to operate the equipment. Also refer to relevant information in this manual.

CE-Konformitätserklärung

Wir,

Studer Professional Audio AG,
CH-8105 Regensdorf,

erklären in eigener Verantwortung, dass das in dieser Anleitung beschriebene Produkt

- A807 MkII Professional Tape Recorder,

auf das sich diese Erklärung bezieht, entsprechend den Bestimmungen der EU-Richtlinien und deren Ergänzungen

- Elektromagnetische Verträglichkeit (EMV):
  89/336/EWG + 92/31/EWG + 93/68/EWG
- Niederspannung:
  73/23/EWG, 93/68/EWG

mit den Normen und normativen Dokumenten übereinstimmt, die in den Kapiteln "Technische Daten" (Sicherheits- und EMV-Standards) dieser Anleitung aufgeführt sind.

Regensdorf, 16. Juni 1995

B. Hochstrasser, Geschäftsleiter

P. Fiala, Leiter QS

CE Declaration of Conformity

We,

Studer Professional Audio AG,
CH-8105 Regensdorf,

declare under our sole responsibility that the product described in this manual

- A807 MkII Professional Tape Recorder,

to which this declaration relates, according to following regulations of EU directives and amendments

- Electromagnetic Compatibility (EMC):
  89/336/EEC + 92/31/EEC + 93/68/EEC
- Low Voltage (LVD):
  73/23/EEC + 93/68/EEC

is in conformity with the standards or other normative documents which are listed in the sections "Technical Data" (security and EMC standards) in this manual.

Regensdorf, June 16, 1995

B. Hochstrasser, Managing Director

P. Fiala, Manager QA

Addendum

To Section 1.1:

A807 MkII is a tape recorder intended for professional use. It is assumed that the unit is operated by trained personnel only and serviced by skilled experts only.
The electrical connections may be connected only to the voltages and signals specified in this manual.
For operation, the tape reel adapters or tape pancake adapters have to be locked.

To Section 2.2:

The unit may be operated only with all covers completely closed and with locked tape transport in order to prevent electric shock hazards to the operating personnel as well as damage caused by dust or undesired effects by electromagnetic interference.

To Sections 2.3.1, 2.4.2:

Before operating the unit please read sections 2.4.2 and 2.4.4.

A807 MkII is extensively protected against faulty manipulations. However, it is necessary to observe the following precautions when working in the area of the tape reels in order to avoid personal injury. It is strictly to be avoided to touch parts of the tape transport before the reels have come to a complete stop.

The operating personnel has to be informed about these precautions. It is strictly to be avoided that the unit is touched by untrained persons during operation.

The tape transport must by no means be tilted during operation, particularlay during fast wind operations! Because of the high winding speed and the thereby caused gyroscopic forces the tape, the reels and the tape transport can be damaged - risk of personal injury!

Manipulations inside the unit may only be done by skilled experts. Fuses must be replaced by exactly the same value and rating only.

Section 2.4.20:

Remote control connections may be established or separated only if all involved units are switched off.

Section 2.6.3:

Before connecting the computer to the A807 MkII as well as before separating the connection, make sure both units are switched off.

Sections 2.4.6, 2.7:

- ❑ When cleaning the capstan shaft make sure that no cleanig fluid penetrates into the bearing!
- ❑ Never use cleaner for anodized surfaces for cleaning the tape heads!

1	**GENERAL INFORMATION**	Quick-reference description Versions, options Accessories and service utilitis Technical specifictions Maintenance hints for the service personal
2	**START UP PROCEDURES, OPERATING**	Installation Putting into operation Operating instructions Status Tree diagramm Error messages Operating with serial interface
3	**TAPE DECK ELECTRONICS**	Circuit descriptions Deinstalling of assemblies Adjustments to tape deck assemblies Mechanical alignment
4	**AUDIO**	Circuit descriptions Calibration Adjustments to audio assemblies
5	**WIRING LISTS, DIAGRAMS MASTER SECTION**	Explanations to wiring lists Explanations to the location pin list Wiring lists
6	**DIAGRAMS TAPE DECK SECTION**	Power supply Tape deck controls
7	**DIAGRAMS AUDIO SECTION**	Level diagrams Audio
8	**SPARE PARTS, OPTIONS**	Detail drawings Spare parts numbers
9	**DIAGRAMS SPARE PARTS, ASSECCORIES**	Parallel remote controls Varispeed, Remote timer Numbers of spare parts
10		

1 General information

1.1 Quick Reference Description 1

1.2 Standard Versions 3
1.2.1 Full-track versions 3
1.2.2 Stereo versions 3
1.2.3 Two-track versions 5
1.2.4 Timecode versions 6
1.2.5 4-Track 1/2" -versions 8

1.3 Options (only for 1/4"-Recorder) 9
1.3.1 Options for 1/4"- and 1/2"-versions 10

1.4 Accessories and service aids 11
1.4.1 Standard accessories 11
1.4.2 Consoles 11
1.4.3 Consoles accessories 12
1.4.4 Remote controls 13
1.4.5 Remote displays 15
1.4.6 Reel adapters 15
1.4.7 Service utensils 16
1.4.8 Accessories 17

1.5 Technical data 18
1.5.1 Technical data 1/4" 18
1.5.2 Technical data 1/4" Timecode 24
1.5.3 Technical data 1/4" reproduce, CCIR 25
1.5.4 Technical data 4-track 1/2" 26
1.5.5 Dimensions A807 MKII 1/4" (in mm) 29
1.5.6 Dimensions A807 MKII 1/2" (in mm) 31

1.6 Instructions for service personal 33
1.6.1 Abbreviations 33
1.6.2 Powers of ten 34
1.6.3 Letters and color codes 34

1.1 Quick Reference Description

With its compact and rugged design, its system flexibility, and the high operating convenience afforded by its microprocessor, the STUDER A807 tape recorder satisfies all requirements of a universal studio machine, be it radio or television studios, recording studios, theater, film, auditoriums, or scientific institutes.
Its salient features are:

- Highly stable die-cast aluminum alloy chassis for the tape transport, the headblock, and other assemblies. The new design extends the possible tape capacity and allows operation with **1000m** standard tape.
- Hall-commutated brushless DC capstan motor with capacitative tacho sensor for highly accurate tape speed and outstanding acceleration and deceleration rates.
- Fast tape deck with high tape spooling speeds and gentle processing of the tapes by electronically controlled tape tension, 2 controlled AC spooling motors with photoelectric tacho sensors and noncontacting tape tension sensor.
- Precision electronic tape counter with real-time indication. Photoelectric scanning of the guide roller rotation.
- Easy editing: motor-assisted with variable spooling speed (SHUTTLE mode) or manually by turning the right-hand reel (one-handed editing). For cueing in spooling mode, the high end of the frequency response is lowered.
- Monitor speaker below the tape deck cover or in the penthouse.
- Manually operable shield above the reproduce head; can remain closed in spooling mode.

Due to the enormous system flexibility, a suitable A807 version is available for any type of application:

- The basic version is available as a mono, 2-channel or stereo machine with or without external instrument panel. Special versions are available for timecode applications and for 1/2" tape (four channels).
- Can be operated in horizontal, inclined, or vertical position.
- Three of four available tape speeds can be selected: 3.75 / 7.5 / 15 / 30ips. Depending on the configuration either the slowest or the fastest speed is not available.
- The 1/2"-4-track tape recorder is available with the tape speed configuration: 7.5 / 15 / 30ips (19 / 38 / 76cm) only.
- The inputs and outputs are balanced and floating, with input/output transformers.
- Either with selector switch for two tape types with different calibration data, or with selector switch for NAB/CCIR equalization.
- Zero locator and transfer locator for up to 3 addresses as standard features.
- Dolby HX PRO headroom extension system as standard feature.
- Equipped with varispeed (variable tape speed).

- Keys for input and output selection on models equipped with VU meters:
  Input selection:
  MIC ON (microphone input; this input does not exist on units equipped with external instrument panel); LINE ON (line input). The microphone inputs are always equipped with a 48V phantom power (changeover to 24 or 12V possible.
  Output selection:
  INPUT, REPRO, and SYNC (reproduction via record head).
  VU-meter panel with input and output selection keys, level potentiometer for recording.
- Adjustable for line voltages of 100 to 140V / 200 to 240VAC, ±10%, 50...60Hz.
- Can be remote controlled from a terminal or personal computer via an RS232 interface.
- Connection facilities for fader start circuit, parallel and serial remote control.

High operating convenience afforded by microprocessor control:

- The last operating state is saved when the machine is switched off: tape counter, locator addresses, tape speed, setting of the input and output selectors. The STOP mode is automatically activated when the machine is powered on again.
- Drop in by pressing only the REC key in play mode (internally programmable)
- Drop out by pressing PLAY during a recording.
- Reduced spooling speed (LIBRARY WIND): A lower spooling speed can be selected for producing pancakes that are to be saved in the library.
- REVERSE PLAY
- TAPE DUMP (waste basket mode with disabled take-up motor).
- LAP TIME (second time level for measuring individual tape segments without influencing the main tape counter).
- Adjustment of the audio parameters and setting of "soft jumpers" via the keyboard.
- LOC START positions the magnetic tape automatically at the address at which the last play or record command (for standstill) was entered.

The following options are available:

- Mono/stereo switch with or without test generator (60, 125Hz, 1, 10, 16kHz).
- Tape scissors and tape marker as well as a headblock cover plate with integrated scissors/splicing block.
- Additional splicing block for units without VU-meter.
- Synchronizer interface.
- Extern connection for INSERT-Input (slave points).
- Audio remote port.
- Elapsed time meter.
- Noise reduction port.

1.2 Standard Versions

1.2.1 Full-track versions

Order No.

A807-1 VU

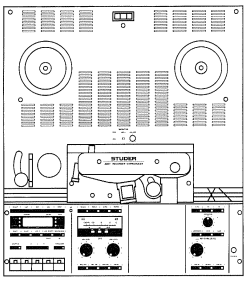

- Machine for 1/4" tape.
- Mono with full-track erase head.
- With channel control.
- Microphone input with phantom power
- Monitor speaker built into tape deck cover.
- VU-meter with input level potentiometer integrated in the operator panel
- Maximum reel diameter 300mm (11.8"). 1000m band.
- Three tape speeds (3.75 / 7.5 / 15ips).
- Varispeed (variable tape speed).
- Chassis version.

60.116.07212

A807-1 VUK**

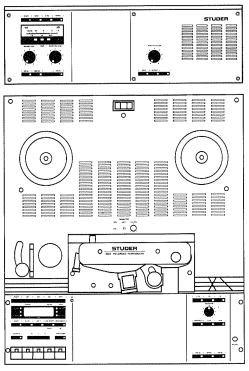

- Machine for 1/4" tape.
- Mono with full-track erase head.
- With channel control.
- Monitor speaker and VU-meter with an input level potentiometer and channel control as well as output level potentiometer built into the instrument panel.
- Maximum reel diameter 300mm (11.8"). 1000m band.
- Three tape speeds (3.75 / 7.5 / 15ips).
- Varispeed (variable tape speed).
- Console version.

60.116.07213

1.2.2 Stereo versions

Order No.

A807-0.75

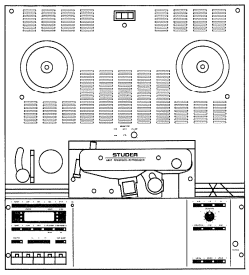

- Machine for 1/4" tape.
- Stereo with 0.75mm track separation, full track erase head.
- Without channel control.
- Monitor speaker built into tape deck cover.
- Maximum reel diameter 300mm (11.8"). 1000m band.
- Three tape speeds (3.75 / 7.5 / 15ips).
- Varispeed (variable tape speed).
- Chassis version.

60.116.07221

A807-0.75 VU 60.116.07222

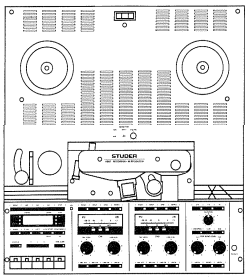

- Machine for 1/4" tape.
- Stereo with 0.75mm track separation, overlapping erasure.
- Microphone input with phantom power.
- Monitor speaker built into tape deck cover.
- VU-meter with input level potentiometer and channel control as well as output level potentiometer built into the operator panel.
- Maximum reel diameter 300mm (11.8"). 1000m band.
- Three tape speeds (3.75 / 7.5 / 15ips).
- Varispeed (variable tape speed).
- Chassis version.

A807-0.75 VUK** 60.116.07224

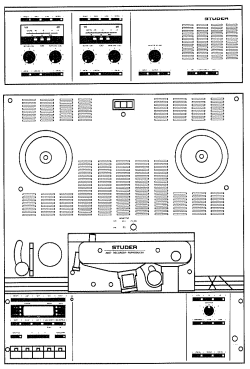

- Machine for 1/4" tape.
- 2-Track/stereo with 0.75mm track separation, overlapping erasure.
- Monitor speaker and VU-meter with input level potentiometer and channel control as well as output level potentiometer built into the instrument panel.
- Maximum reel diameter 300mm (11.8"). 1000m band.
- Three tape speeds (3.75 / 7.5 / 15ips).
- Varispeed (variable tape speed).
- Console version.

A807-0.75 VUK HS** 60.116.07225

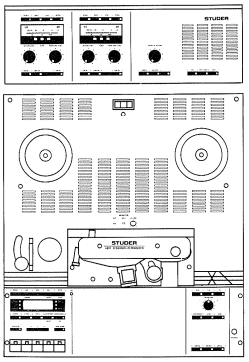

- Machine for 1/4" tape.
- 2-Track/stereo with 0.75mm track separation, overlapping erasure.
- Monitor speaker and VU-meter with input level potentiometer and channel control as well as output level potentiometer built into the instrument panel.
- Maximum reel diameter 300mm (11.8"). 1000m band.
- Three tape speeds (7.5 / 15 / 30ips).
- Varispeed (variable tape speed).
- Console version.

A807-0.75 PBO* 60.116.07226

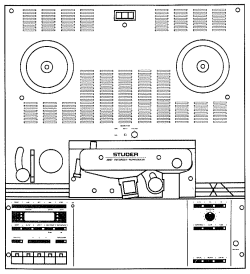

- Machine for 1/4" tape.
- Stereo with 0.75mm track separation, reproduce-only (recording electronics not retrofittable).
- Without channel control.
- Monitor speaker built into tape deck cover.
- Maximum reel diameter 300mm (11.8"). 1000m band.
- Three tape speeds (3.75 / 7.5 / 15ips).
- Varispeed (variable tape speed).
- Chassis version.

A807-0.75 VU PBO*

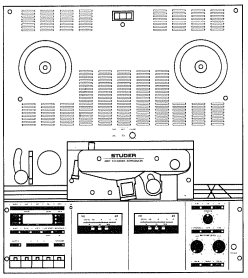

- Machine for 1/4" tape.
- Stereo with 0.75mm track separation, reproduce-only (recording electronics not retrofittable).
- Without channel control.
- Monitor speaker built into tape deck cover.
- VU-meter with output level potentiometer integrated in operator panel.
- Maximum reel diameter 300mm (11.8").
- Three tape speeds (3.75 / 7.5 / 15ips). 1000m band.
- Varispeed (variable tape speed).
- Chassis version.

60.116.07227

1.2.3 Two-track versions

Order No.

A807-2 F

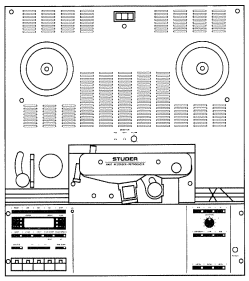

- Machine for 1/4" tape.
- 2-Track/stereo with 2mm track separation, full-track erase head.
- Without channel control.
- Monitor speaker built into tape deck cover.
- Maximum reel diameter 300mm (11.8"). 1000m band.
- Three tape speeds (3.75 / 7.5 / 15ips).
- Varispeed (variable tape speed).
- Chassis version.

60.116.07230

A807-2/2

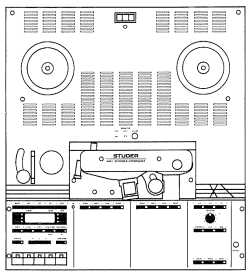

- Machine for 1/4" tape.
- 2-Track/stereo with 2mm track separation, overlapping erasure.
- With channel control, without VU-meter and input/output level potentiometers.
- Monitor speaker built into tape deck cover.
- Maximum reel diameter 300mm (11.8"). 1000m band.
- Three tape speeds (3.75 / 7.5 / 15ips).
- Varispeed (variable tape speed).
- Chassis version.

60.116.07231

A807-2/2 VU

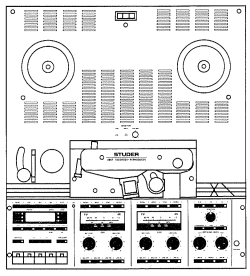

- Machine for 1/4" tape.
- 2-Track/stereo with 2mm track separation, overlapping erasure.
- Microphone input with phantom power.
- Monitor speaker built into tape deck cover.
- VU-meter with input level potentiometers and channel control as well as output level potentiometer integrated in the operator panel.
- Maximum reel diameter 300mm (11.8"). 1000m band.
- Three tape speeds (3.75 / 7.5 / 15ips).
- Varispeed (variable tape speed).
- Chassis version.

60.116.07232

A807-2/2 VU HS 60.116.07264

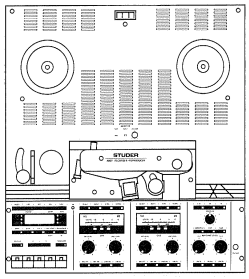

- Machine for 1/4" tape.
- 2-Track/stereo with 2mm track separation.
- Microphone input with phantom power.
- Monitor speaker built into tape deck cover.
- VU-meter with input level potentiometer and channel control as well as output level potentiometer built into the operator panel.
- Maximum reel diameter 300mm (11.8"). 1000m band.
- Three tape speeds (7.5 / 15 / 30ips).
- Varispeed (variable tape speed).
- Chassis version.

A807-2/2 VUK** 60.116.07234

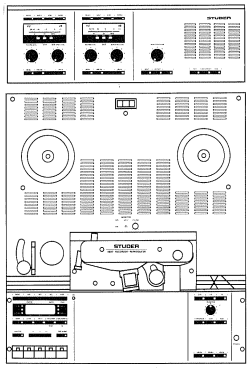

- Machine for 1/4" tape.
- 2-Track/stereo with 2mm track separation, overlapping erasure.
- Monitor speaker and VU-meter with input level potentiometer and channel control as well as output level potentiometer built into the instrument panel.
- Maximum reel diameter 300mm (11.8"). 1000m band.
- Three tape speeds (3.75 / 7.5 / 15ips).
- Varispeed (variable tape speed).
- Console version.

A807-2/2 VUK HS** 60.116.07265

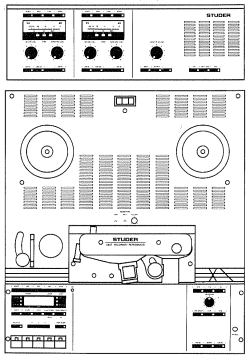

- Machine for 1/4" tape.
- 2-Track/stereo with 2mm track separation, overlapping erasure.
- Monitor speaker and VU-meter with input level potentiometer and channel control as well as output level potentiometer built into the instrument panel.
- Maximum reel diameter 300mm (11.8"). 1000m band.
- Three tape speeds (7.5 / 15 / 30ips).
- Varispeed (variable tape speed).
- Console version.

1.2.4 Timecode versions

Order No.

A807-2 TC VU 60.116.07242

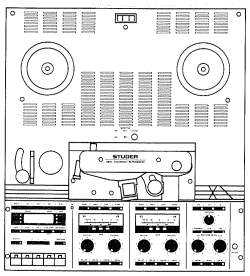

- Machine for 1/4" tape.
- 2-Track/stereo with 2mm track separation.
- Microphone input with phantom power.
- With time code head and electronics.
- Monitor speaker built into tape deck cover.
- VU-meter with input level potentiometer and channel control as well as output level potentiometer built into the operator panel.
- Maximum reel diameter 300mm (11.8"). 1000m band.
- Three tape speeds (3.75 / 7.5 / 15ips).
- Varispeed (variable tape speed).
- Console version.

A807-2 TC VUK**

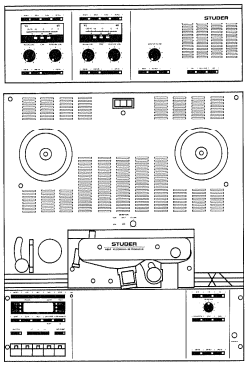

60.116.07243

- Machine for 1/4" tape.
- 2-Track/stereo with 2mm track separation.
- Microphone input with phantom power.
- With time code head and electronics.
- Monitor speaker built into tape deck cover.
- VU-meter with input level potentiometer and channel control as well as output level potentiometer built into the operator panel.
- Maximum reel diameter 300mm (11.8"). 1000m band.
- Three tape speeds (3.75 / 7.5 / 15ips).
- Varispeed (variable tape speed).
- Console version.

A807-2 TC VU HS

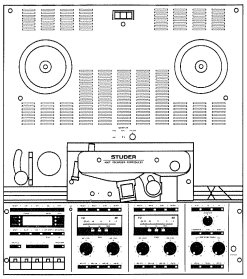

60.116.07245

- Machine for 1/4" tape.
- 2-Track/stereo with 2mm track separation.
- Microphone input with phantom power.
- With time code head and electronics.
- Monitor speaker built into tape deck cover.
- VU-meter with input level potentiometer and channel control as well as output level potentiometer built into the operator panel.
- Maximum reel diameter 300mm (11.8"). 1000m band.
- Three tape speeds (7.5 / 15 / 30ips).
- Varispeed (variable tape speed).
- Console version.

A807-2 TC VUK HS**

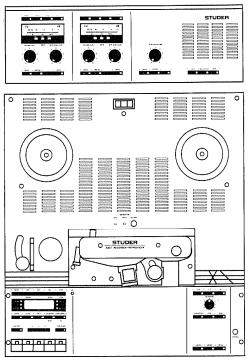

60.116.07246

- Machine for 1/4" tape.
- 2-Track/stereo with 2mm track separation.
- With time code head and electronics.
- Monitor speaker and VU-meter with input level potentiometer and channel control as well as output level potentiometer built into the instrument panel.
- Maximum reel diameter 300mm (11.8"). 1000m band.
- Three tape speeds (3.75 / 7.5 / 15ips).
- Varispeed (variable tape speed).
- Console version.

Notes:

* A807 PBO and A807 VU PBO (Playback only) versions cannot be upgraded with record facilities.

** On request, special instrument panels for 19" rack mounting (in place of the wooden side panels) are available for all VUK versions. The rack mounting brackets 1.727.071.00 must be ordered in this case.

1.2.5 4-Track 1/2" -versions

Order No.

A807-4 1/2" VUK HS

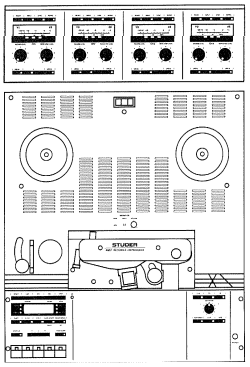

- Machine for 1/2" tape.
- 4-track with 4-track erase head.
- Overbridge equipped with VU-Meters, channel mode selectors and peak indicators.
- Built-in monitor loudspeaker.
- In- and outputs transformer equipped.
- Maximum reel diameter 11.1" (282mm). 760m tape.
- Three tape speeds (7.5 / 15 / 30ips).
- Varispeed (variable tape speed).
- Console version.

60.116.07060

A807-4 1/2" TC VUK HS

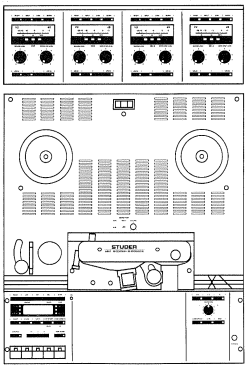

- Machine for 1/2" tape.
- 4-track with 4-track erase head.
- Time code centre track.
- Time code head and-electronics.
- Overbridge equipped with VU-Meter, channel mode selector and peak indicators.
- Built-in monitor loudspeaker.
- In- and outputs transformer equipped.
- Maximum reel diameter 11.1" (282mm). 760m tape.
- Three tape speeds (7.5 / 15 / 30ips).
- Varispeed (variable tape speed).
- Console version.

60.116.07261

A807-4 1/2" TC HS

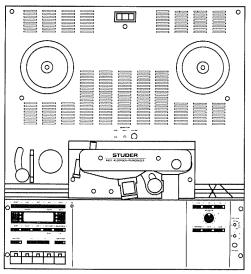

- Machine for 1/2" tape.
- 4-track with 4-track erase head.
- Time code centre track.
- Time code head and-electronics.
- With **external** channel remote control for 4-audio channels and 1 time code channel.
- Built-in monitor loudspeaker.
- Maximum reel diameter 11.1" (282mm). 760m tape.
- Three tape speeds (7.5 / 15 / 30ips).
- Varispeed (variable tape speed).
- Console version.

60.116.07259

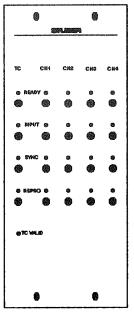

Additional Manuals

Operating instruction manual MKII (English)	10.27.3071
Operating and service instruction manual MKII (English)	10.27.1421
Operating instruction manual MKII (German)	10.27.3081
Operating and service instruction manual MKII (German)	10.27.1411

1.3 Options (only for 1/4"-Recorder)

		Order No.
Tape scissors	Kit for all versions (Except: Time code versions).	20.807.894.00
	Kit for Time code versions.	20.807.889.00
Tape marker	Kit for all versions.	20.807.896.00
Tape scissors and tape marker	Kit for all versions (Except: Time code versions).	20.807.895.00
	Kit for Time code versions	20.807.890.00
Cutting/splicing block	For installation on the operator panel For versions with VU-meters installed in the instrument panel or for versions without VU-meter.	20.807.173.00
	Headblock cover designed as a cutting/splicing block. For all versions. (Except: Time code versions).	20.807.172.00
	For Time code versions.	20.807.887.00
Mono/stereo switch	For all record/reproduce versions.	20.807.176.00
Mono/stereo switch with test generator	For all versions. With built-in booster amplifier for 10 and 20dB and test generator (60, 125Hz; 1, 10, 6kHz).	20.807.174.00
Mono/stereo switch for (PBO) reproduce-only	For all (PBO) reproduce only versions.	20.807.168.00
12V Phantom power conversion kit (instead of 48V)	For all versions with balanced microphone input.	20.807.175.00
Noise reduction system control interface	Switches the noise reduction system in accordance to the record- resp. reproduce command to the corresponding function. (Opencollector-outputs, active Low-as well as active High-Level.	20.807.946.00
Audio insert interface	For symmetrical in- and output insert points (reproduce- and record path) for an external device (E.G. noise reduction system).	20.807.950.00
Headblock assembly with azimuth adjustment knob	For record and reproduce head.	20.807.949.00
Stereo monitor penthouse	Comprising: Stereo monitor speaker, volume control and selector for input/reproduce/auxiliary/input signal. Including wiring and connection material. Suitable for all Stereo-Versions without external VU-overbridge. (Only for consoles 20.020.205.07/.17).	20.807.163.00

Stereo monitor penthouse with VU meters	Comprising: 2 VU meters (CH1/CH2), stereo monitor speaker, volume control and selector for input/ reproduce/auxiliary input signal. Including wiring and connection material. Suitable for all Stereo-Versions without external VU-overbridge. *(Only for consoles 20.020.205.07/.17)*	20.807.164.00
Mono monitor penthouse with VU meter	Comprising: 1 VU meter, monitor speaker, volume control and selector for input/reproduce signal. Including wiring and connection material. Suitable for all Mono-Versions without external VU-overbridge. (Only for consoles 20.020.205.07/.17)	20.807.166.00
Reel shelf	Serves as a storage area; in place of the penthouse. Only installable on consoles with penthouse (20.020.205.07/.17)	21.811.560.00

1.3.1 Options for 1/4"- and 1/2"-versions

		Order No.
Elapsed time meter	Electromechanical hour meter	20.807.911.00
Audio channel remote control interface	Required for external channel remote control unit 1.328.512.00 (2-channel version) or 1.328.515.00 (4-channel version)	20.807.947.00
Synchronizer control port	Kit for all versions (Standard for TC-versions)	20.807.177.00
Special light barrier	Conversion kit light-barrier for clear leader tape detection. Stops and parks tape recorder at the end and beginning of sequential takes. Delay adjustable. (Suitable for A807 MKI versions)	10.023.513.00
	Conversion kit light-barrier for clear leader tape detection. Stops and parks tape recorder at the end and beginning of sequential takes. Delay adjustable. (Suitable for A807 MKII versions)	10.023.528.00

1.4 Accessories and service aids

1.4.1 Standard accessories

	Order No.
Set:	**20.020.302.32**
1 Power cord 2.5m, EURO connector	10.223.001.01
1 Set of audio connectors, XLR (per channel)	
1 Allen screwdriver 2.0mm	26.06.1020
1 Allen screwdriver 2.5mm	10.258.003.09
1 Allen screwdriver 3.0mm	10.258.003.10
1 Allen screwdriver 4.0mm	26.06.1040
5 Fuses 5x20mm, 1A SLOW	51.01.0117
5 Fuses 5x20mm, 1.6A SLOW	51.01.0119
5 Fuses 5x20mm, 2A SLOW	51.01.0120
5 Fuses 5x20mm, 3.15A SLOW	51.01.0122
5 Fuses 5x20mm, 4A SLOW	51.01.0123
2 VU-meter bulbs 6V/30mA	51.02.0144
1 Label set	1.727.101.08
6 S-screw IS M3x6	21.51.2354

1.4.2 Consoles

		Order No.
	■ A807 console complete with wooden side panels. Tilt mechanism integrated in console complete with castors. ■ Operational height: 840mm.	
1/4" Consoles:	Console **with Penthouse-Support** for machines with VU overbridge, reel shelf or external monitor panel.	
	■ With traverse	20.020.205.07
	■ With pedestal rack 19"/3U	20.020.205.17
	Console **without Penthouse**	
	■ With traverse	20.020.205.27
	■ With pedestal rack 19"/3U	20.020.205.37
TC-Penthouse extension:	■ For installing the local control unit of the synchronizer TLS 4000-LCU. Fits on top of the existing penthouse. Includes wooden side panels.	1.058.058.00
1/2" Consoles:	Console **with Penthouse-Support** for VUK-versions.	
	■ With traverse for 4-1/2" machine	20.020.205.10
	■ With pedestal rack 19"/3U	20.020.205.20

1.4.3 Consoles accessories

		Order No.
19" pedestal Rack	■ Retrofit kit for three 19" modules with a height 1.058.057.00 of 40.58mm each. (For 1/4" and 1/2" consoles).	
Overbridge with shelf	■ Instead of penthouse. (Only for consoles 20.020.205.07/.17)	21.811.560.00
Side brackets	■ Pair of side brackets, for enlargement of overall witdth of recorder surface, keeps reels within profile of console.	1.058.081.00
Blanking panels for rack base	Filler panels for 19" pedestal rack:	
	■ 1U width, anodized finish	1.918.001.00
	■ 2U width, anoidzed finish	1.918.002.00
	■ 3U width, anodized finish	1.918.003.00
	Filler panels for 19" pedestal rack:	
	■ 1U width, gray paint finish	1.918.011.00
	■ 2U width, gray paint finish	1.918.012.00
	■ 3U width, gray paint finish	1.918.013.00
	1 unit = 40,58mm	
	Screw for 19" rack mounting	
	■ M6 x 12	21.99.0164
	■ M6 x 16	21.99.0167
	■ Washer for 19" rack mounting, M6	23.99.0121

1.4.4 Remote controls

Order No.

Desk-Top Version

- **Parallel transport remote controller** 1.328.250.00
  table cabinet, with 15m connection cable
  (vacant space for 1.328.253.00 varispeed controller)

- **Varispeed controller** 1.328.253.00
  for installation into cabinet of controller

- **25 pin D-connector** 1.328.254.00
  Secondary (pass through) connector for installation into cabinet of 20.820.366.00 controller

Installation version

- **Parallel transport remote controller** 20.820.367.00
  STUDER standard module dimension, 1 module width, with 15m connection cable

- **Varispeed controller** 1.328.290.00
  STUDER standard module dimension, 1 module width (without connection cable)

- **Varispeed controller** 1.328.280.00
  deluxe version with digital readout of speed deviation in halftones STUDER standard module dimension, 1 module width (without connection cable)

  - **Flat ribbon cable, 0.3m** 1.023.102.03
    for connecting varispeed controller 1.328.290.00 or 1.328.280.00 to parallel transport remote controller 20.820.367.00

  - **Connection cable, 15m** 1.328.292.00
    for connecting varispeed controller 1.328.290.00 or 1.328.280.00 to A807 tape recorder directly.

- **Audio channel remote control for 2 channels and TC channel** 1.328.512.00
  STUDER standard modul, dimension 1 module width, with 15m connection cable.
  (Requires machine option 20.807.947.00).

- **Audio channel remote control for 4 channels and TC channel** 1.328.515.00
  STUDER standard modul, dimension 2 module width, with 15m connection cable.
  (Requires machine option 20.807.947.00).

Connectors to options and remote control ports	Required only if non STUDER devices are to be connected. All Studer remote controls are equipped with mating connectors to machine ports.	
	■ **Connector to serial remote control port** 9-pin D-connector, screw-lock type (Key position 6)	20.020.303.40
	■ **Connector to parallel remote control port** 25-pin D-connector, screw-lock type (Key position 24).	20.020.303.16
	■ **Connector to synchronizer** 25-pin D-connector, screw-lock type (Key position 8)	20.020.303.37
	■ **Connector to noise reduction system control interface port** (option 20.807.946.00) 15-pin D-connector, screw-lock type (Key position 12)	20.020.303.33
	■ **Connector to audio channel remote control interface** (option 20.807.947.00) 15-pin D-connector screw-lock type (Key position 6)	20.020.303.34
	■ **Connector to serial TC-display port** 9-pin D-connector, screw-lock type (Key position 4)	20.020.303.20
	■ **Connector to Audio-Insert Interface** 25-pin D-connector, screw-lock type (no Key position)	20.020.303.12
Table cabinet	■ for STUDER standard modul remote control accepting 6 STUDER standard modules.	1.328.095.00
Filler panels for table cabinet	Filler panels for 19" pedestal rack:	
	■ 1 module width, anodized finish	1.038.341.00
	■ 2 module width, anodized finish	1.038.342.00
	■ 3 module width, anodized finish	1.038.343.00
	Filler panels for 19" pedestal rack:	
	■ 1 module width, gray paint finish	1.328.185.00
	■ 2 module width, gray paint finish	1.328.186.00
	■ 3 module width, gray paint finish	1.328.187.00
	■ 5 module width, gray paint finish	1.328.189.00

1.4.5 Remote displays

Order No.

Remote counter

- Serial remote counter RS232 with 5-digit display, counter reset and zero loc function for desk top use or installation into mounting frame 1.328.275.31-33, with 15m connection cable. (H = 50,8 x W = 157 x D = 130mm) — 20.020.100.30
- Remote counter display with 5-digit indication, for desk top use, or installation into mounting frame 1.328.330.31-33, without cables. Up to three remote counters may be connected onto one machine. (Requires machine interface option 20.807.947.00) — 1.328.330.00

Connection cable, 15m long, for connecting remote counter display to machine directly D-type 15 pol/9 pol. — 1.328.333.81

Connection cable, 15m long, for connecting an additional remote counter display to another one. D-type 9 pole. — 1.862.421.00

TC remote counter

- Serial TC display with additional TC valid and time code frame rate indicators for desk top use, complete with 15m connection cable. This display suitable for A807 TC machines only. (H = 50,8 x W = 157 x D = 130mm) — 21.328.285.00

Mounting frames

STUDER standard module dimension, 5 module width (190 x 202.9mm) with mounting position for installing of:

	For **1.328.330.00**	For **21.328.285.00**	For **20.020.100.30**
■ 1 remote counter	1.328.330.31	1.328.285.31	1.328.275.31
■ 2 remote counters	1.328.330.32	1.328.285.32	1.328.275.32
■ 3 remote counters	1.328.330.33	1.328.285.33	1.328.275.33

1.4.6 Reel adapters

Order No.

- DIN hub 1/4", metallic — 10.200.003.01
- DIN adapter with tape reel flange, for 1/4" hub (11,8") — 1.013.047.81
- NAB adapter, standard, for 1/4" Reel — 89.01.0354
- NAB adapter, professional, with aluminium hand piece, for 1/4" reel — 1.013.332.00
- NAB-AEG open reel adapter — 1.013.257.00
- NAB metal reel, empty, 1/4" (10.5") — 10.213.001.01
- NAB metal reel, empty, 1/2" (10.5") — 10.213.001.04

1.4.7 Service utensils

		Order No.
STUDER tape splicing kit 1/4"	Comprising a cutting and editing block, one antimagnetic cutting blade, splicing tabs, and a grease pen for marking the tape.	10.030.452.40
STUDER cleaning kit in carrying case	■ Contains 1 bottle of head cleaner, 1 bottle of aluminite cleaner, lint-free non woven fleece squares, and a piece of buckskin.	10.496.010.00
Head cleaner:	■ Replacement bottle ■ 1 litre	10.496.021.00 10.496.022.00
Aluminite cleaner:	■ Replacement bottle ■ 1 litre	10.496.025.00 10.496.026.00
Service tools:	■ Tool case (basic kit) with soldering iron and demagnetizing choke for 110V.	20.020.001.20
	■ Tool case (basic kit) with soldering iron and demagnetizing choke for 220V.	20.020.001.21
	■ Supplementary tool kit for A807 tape recorder, including extension cord for the capstan motor (1.727.216.00) and the spooling motors (1.727.217.00)	20.020.001.38
	■ Extension cable for capstan motor control PCB	1.727.216.00
	■ Extension cable for spooling motor control PCB	1.727.217.00

1.4.8 Accessories

		Order No.
Wooden side panels	■ Wooden side panels with recessed carrying grips.	1.727.069.00
Transport cover	■ Transport cover, also offers space for two tape reels and the connection cables. (Wooden side panels 1.727.069.00 are required).	1.727.074.81
Carrying case	■ Made of aluminum, extremely sturdy, requires rack mounting kit (1.727.071.00). The tape recorder can be operated directly when the lid is opened.	10.386.001.01
Rack mounting kit	■ Contains two mounting brackets and mounting accessories for installing an A807 into a 19" rack. This kit is not required for STUDER consoles.	1.727.071.00
Dust covers	■ Dust cover plastic for machines in economy studio console without overbridge	10.578.807.02
	■ Dust cover plastic for machines in economy studio console with overbridge	10.578.807.03
	■ Dust cover plastic for table top machine in vertical operating position (with wooden side panels)	10.578.807.04
	■ Dust cover plastic for table top machine in horizontal operating position (with wooden side panels)	10.578.807.05

1.5 Technical data

1.5.1 Technical data 1/4"

Spooling motors:	Two direct driving external-rotor AC asynchronous motors with active 3-phase control, controlled frequency correction, and switched motor output stages.	
Capstan motor:	Brushless DC motor with hall element commutation.	
Tape deck control:	Via microprocessor, for all functions and function transitions.	
Tape counter:	5-Position LED indication in hours, minutes, and seconds at all tape speeds, from zero in reverse direction with negative sign, decrementing. Range:	 -9h 59min 59s ... 29h 59min 59s
Starting time:	At 15ips tape speed, 1000m tape with DIN hub or 762m (2500ft) tape with NAB reel (for reaching 200% of the specified wow-and-flutter rating)	approx. 0.8s
Winding time:	for 760m tape for 1000m tape	<90s <120s
Braking time:	from winding speed	approx. 3s
Winding at reduced speed:	LIBRARY WIND mode	approx. 5m/s
Tape reels:	Max. reel diameter Min. hub diameter, left Min. hub diameter, right Reel adapter	11,5" / 300mm 1.8" / 45mm 2.4" / 60mm NAB/DIN, Ciné, 3-prong
	The maximum pancake capacity with professional magnetic tape (thickness 50μm) is	3280ft (1000m)
Tape width:		1/4" / 6.3mm
Tape speeds:	Switch selectable Standard version:	 38.1, 19.05, 9.525cm/s 15, 7.5, 3.75ips
	High speed version:	76.2, 38.1, 19.05cm/s 30, 15, 7.5ips
Tape speed deviation:		max. ±0.2%

Varispeed:	Variable tape speed in semitones (ST).	3.75ips +7...–1.5 ST 7.5ips +7...–7 ST 15ips +7...–7 ST 30ips +7...–7 ST
Wow and flutter:	Peak value weighted, according to DIN 45507 or IEC publ. 386. Ambient air temperature 0...+40°C, Nominal tape speeds.	3.75ips: ±0.10% 7.5ips: ±0.07% 15ips: ±0.05% 30ips: ±0.05%
Tape slip:		Max. 0.1%
Tape tension:	Controlled in all tape transport functions, measured with spring dynamometer; in record and play mode. Factory setting based on horizontal operating position. Nominal: (70 p) Adjustable:	 0.7N 0.5...1.8N
Line inputs:	Via transformer, Input impedance: Connector:	balanced, floating 30Hz ... 20kHz ≥7,5kΩ XLR, IEC 268-12
Input levels:	■ NAB: For operating level (0VU) Internally adjustable ■ CCIR: For peak level (0VU +6dB) Internally adjustable ■ UNCAL: (for versions with VU meters and input /output level potentiometers). Max. increase of the input sensitivity Max. admissible input level Internal adjustment range of the working magnetic flux with the above input levels:	 +4dBu –30 ... +12dBu +6dBu –24 ... +18dBu 10dB +24dBu 100 ... 1000nWb/m
Microphone inputs:	Via transformer, Input impedance:	balanced, floating >1.2kΩ
Input level:	Without attenuator (max. –26dBu): With attenuator (max. 2.6dBu/1kHz; 0dBu/40Hz)	–82dBu –54dBu
Noise factor:	Rq = 200Ω	<5dB
Phantom power:	(Convertible to +12V)	+48V
Output meters:	VU versions: LED peak program meter:	VU-meter 0VU +6 / +9 / +12dB
Line outputs:	Via transformer, Source impedance: (1kHz) Connector:	balanced, floating <50Ω XLR, IEC 268-12

Output level:

- NAB
  For operating level (0VU, into 600Ω load +4dBu
  Internally adjustable −17 ... +12dBu
- CCIR:
  For peak level (0VU +6dB) into 600Ω load +6dBu
  Internally adjustable −11 ... +18dB
- UNCAL: (for versions with VU meters and input/output level potentiometers).
  Max. increase of the reproduce gain 10dB
  Max. output level into 600Ω load +24dBu
  into 200Ω load +22dBu

Internal adjustment range of the reproduce gain
for working magnetic flux of 100 ... 1000nWb/m

Headphones output: Short-circuit-proof, RL > 600Ω / Ri = 220Ω; max. 5.0V

Monitor speaker: Output of power amp. max. 0.7W

Equalizations: Switch-selectable NAB/CCIR/AES

Equalization time constants:

	3.75ips	7.5ips	15ips	30ips
NAB	90/3180µs	50/3180µs	50/3180µs	17,5/∞µs (AES)
CCIR	90/3180µs	70/∞µs	35/∞µs	17,5/∞µs (AES)

Frequency response, record/reproduce mode:

	3.75ips	7.5ips	15ips	30ips
±2dB	30Hz...12kHz	30Hz...16kHz	30Hz...20kHz	40Hz...22kHz
±1dB	30Hz...8kHz	30Hz...12kHz	50Hz...18kHz	60Hz...20kHz

Frequency response, sync track reproduction :

	3.75ips	7.5ips	15ips	30ips
±2dB	40Hz...5kHz	40Hz...10kHz	40Hz...12kHz	50Hz...12kHz

Signal-to-noise ratio record/reproduce mode:

CCIR: Equalization according to CCIR, measured with tape type AGFA PER528, BASF LGR50 or equivalent tape.

- Full track, 6.3mm track width:

	3.75ips	7.5ips	15ips	30ips
nWb/m	250	320	320	320
Unweighted according to CCIR468-II	57dB	61dB	62dB	64dB
Weighted according to CCIR468-II	48dB	51dB	52dB	54dB
Weighted according to ASA-A (IEC179)	62dB	64dB	65dB	67dB

- Stereo 2.75mm track width:

	3.75ips	7.5ips	15ips	30ips
nWb/m	400	510	510	510
Unweighted according to CCIR468-II	57dB	61dB	62dB	64dB
Weighted according to CCIR468-II	48dB	51dB	53dB	54dB
Weighted according to ASA-A (IEC179)	62dB	65dB	66dB	68dB

- 2-Track, 2mm track width:

	3.75ips	7.5ips	15ips	30ips
nWb/m	400	510	510	510
Unweighted according to CCIR468-II	56dB	60dB	61dB	63dB
Weighted according to CCIR468-II	47dB	50dB	52dB	53dB
Weighted according to ASA-A(IEC179)	61dB	64dB	65dB	67dB

NAB: Equalization according to NAB, measured with magnetic tape SCOTCH 3M 226 or equivalent type.

- Full track, 6.3mm track width:

	3.75ips	7.5ips	15ips	30ips
nWb/m	510	1040	1040	1040
Linear, RMS, 30Hz...20kHz	62dB	73dB	71dB	74dB
RMS value, ASA-A weighted according to DIN 45633; IEC 179B	66dB	76dB	74dB	78dB

- Stereo, 2.75mm track width:

	3.75ips	7.5ips	15ips	30ips
nWb/m	510	1040	1040	1040
Linear,RMS, 30Hz...20kHz	58dB	69dB	67dB	70dB
RMS value, ASA-A weighted according to DIN 45633; IEC 179B	63dB	73dB	71dB	75dB

- 2-Track, 2mm track width:

	3.75ips	7.5ips	15ips	30ips
nWb/m	510	1040	1040	1040
Linear, RMS, 30Hz...20kHz	56dB	68dB	66dB	69dB
RMS value, ASA-A weighted according to DIN 45633; IEC 179B	61dB	72dB	70dB	74dB

Sync mode:

- All versions:
  RMS value, ASA-A (IEC179 / DIN 45633):
  Same values as measured with tape in Record - sync - play mode

Harmonic distortion K3: (RL = 600Ω)

CCIR: Peak level, record/reproduce, measured with tape type 3M226.

3,75ips	/	315Hz	(400nWb/m)	1,5%
7,5ips	/	1kHz	(510nWb/m)	1,2%
15ips	/	1kHz	(510nWb/m)	1,0%
30ips	/	1kHz	(510nWb/m)	1,0%

NAB: Peak level, record/reproduce, measured with tape type 3M226.

3,75ips	/	315Hz	(400nWb/m)	1,0%
7,5ips	/	1kHz	(510nWb/m)	1,0%
15ips	/	1kHz	(510nWb/m)	1,0%
30ips	/	1kHz	(510nWb/m)	1,0%

Channel separation:	According to DIN 45521, at 15ips / 1kHz	≥55dB
Erase efficiency:	With 2-track erase head, at 15ips / 1kHz With full track erase head, at 15ips / 1kHz	≥75dB ≥78dB
Erase and bias frequency:	At all tape speeds	153.60kHz
Power requirements:	Switch-selectable:	100/120/140/200/220/240V ±10% 50...60Hz
Power fuse:	100...140V 200...240V	3.15A / 250V slow 1.60A / 250V slow
Power consumption:	Idle Recording (2 CH) Fast forward/rewind Maximum connected load	approx. 70VA approx. 150VA approx. 180VA 300VA
Admissible power failure:	For retaining the operational state	max. 100ms
Parallel interface:	For controlling the tape transport functions, the variable tape speed (varispeed), and the fader start input.	25 pin D-type
Serial interface:	(RS232) for remote control of all functions.	9 pin D-type
Ambient temperature range:	Operation:	32...104°F (0...40°C)
Relative humidity:	Noncondensing	20...90%
Operating position:	From horizontal to vertical.	
Safety standards:	EN 60065 / 1993; IEC 65 / 1985	
EMC standards:	EN 50081-1 / 1992; EN 50082-1 / 1992	
Betriebslage	The technical data apply to any operating position between horizontal and vertical.	
Weight:	Chassis version approx.	30kg

We reserve the right to make changes as technical progress may warrant.

1.5.2 Technical data 1/4" Timecode

The time code channel corresponds to the IEC publication 461, DIN 45511, part 7.

Track width/track location:	In center of tape	0.38mm
Code format:	80-Bit address code (switch selectable 24/25/29.97/30 frames/second)	SMPTE/EBU
Tape speeds:	76,2cm/s 30ips 38,1cm/s 15ips 19,05cm/s 7,5ips 9,5cm/s 3,75ips	
Magnetic flux of the time code track:		729nWb/mpp ±3dB
Time code channel input:	With transformer balanced and floating Input impedance	≥10kΩ
Input level:	nominal: 2,0 Vpp* minimum: 0,25Vpp* maximum: 4,0 Vpp*	
Time code channel output:	With transformer Output impedance Output level: Load ≥200Ω	balanced and floating ≤40Ω 2Vpp*
Crosstalk from code channel to audio channel:	Relative to 510nWb/m tape flux of the audio track, for all components of the time code signal.	≥90dB
Time code delay unit:	(TIME CODE DELAY UNIT) Selectable time code delay for: Coincident time code and audio track recording or reproduction at 24/25/29.97/30 frames/sec	
Coincidence error:	at 38,1cm/s (15ips)	±4ms
Timecode display:	internal LED showing valid code	

* Vpp = peak-peak

1.5.3 Technical data 1/4" reproduce, CCIR

Frequency response, reproduce:

	3.75ips	7.5ips	15ips
±1dB	30Hz...8kHz	30Hz...12kHz	50Hz...18kHz
±2dB	30Hz...12kHz	30Hz...16kHz	30Hz...20kHz

Signal-to-noise ratio reproduce mode:

Equalization according to CCIR, measured with tape type AGFA PER 528.

- Full track, 6.3mm track width:

	3.75ips	7.5ips	15ips
nWb/m	250	320	320
Linear, RMS 30Hz - 20kHz	57dB	60dB	61dB
CCIR468-II (DIN 45405) quasi peak	47dB	50dB	52dB

- Stereo 2.75mm track width:

	3.75ips	7.5ips	15ips
nWb/m	400	510	510
Linear, RMS 30Hz - 20kHz	57dB	60dB	61dB
CCIR468-II (DIN 45405) quasi peak	48dB	51dB	53dB

- 2-Track, 2mm track width:

	3.75ips	7.5ips	15ips
nWb/m	400	510	510
Linear, RMS 30Hz - 20kHz	56dB	59dB	61dB
CCIR468-II (DIN 45405) quasi peak	46dB	49dB	51dB

1.5.4 Technical data 4-track 1/2"

Tape speeds:

76,2cm/s	30ips
38,1cm/s	15ips
19,05cm/s	7.5ips

Tape speed deviation: max. ±0,2%

Tape width: 1/2" (12,6mm)

Track width: 4 x 0,069 inch (4 x 1,75mm)

Wow and flutter: Peak value weighted, according to DIN 45507 or IEC

30ips	max. 0,05%
15ips	max. 0,05%
7.5ips	max. 0,07%

Winding time: <90s

Braking time: from winding speed — app. 3s

Tape tension: nominal — 110gr.

Tape reels NAB-reel diameter — 265mm

Equilization NAB/CCIR switchable

Equlization time constants:

	7.5ips	15ips	30ips
NAB	50/3180µs	50/3180µs	17,5/∞µs
CCIR	70/∞µs	35/∞µs	17,5/∞µs

Frequency response, record/reproduce:

	7.5ips	15ips	30ips
±1dB	30Hz...12kHz	50Hz...18kHz	100Hz...20kHz
±3dB	30Hz...16kHz	30Hz...20kHz	40Hz...22kHz

Frequency, response sync track reproduction:

	7.5ips	15ips	30ips
±2dB	40Hz...8kHz	40Hz...12kHz	60Hz...12kHz

CCIR

Signal to-noise ratio record/reproduce mode:

Equalization relative to 510nWb/m magnatic tape AGFA PEM 469

	7.5ips	15ips	30ips
Linear, RMS 30Hz - 20kHz	58dB	60dB	62dB
CCIR468-II (DIN 45405) quasi peak	48dB	51dB	53dB
RMS value, ASA-A weighted according to IEC-publ. 179 (DIN 45633)	63dB	65dB	67dB

Signal to-noise ratio record/sync mode:

Equalization relative to 510nWb/m magnetic tape AGFA PEM 469

	7.5ips	15ips	30ips
RMS value, ASA-A weighted according to IEC-publ. 179 (DIN 45633)	63dB	65dB	67dB

NAB

Signal to-noise ratio record/reproduce mode:

Equalization relative to 510nWb/m magnetic tape Scotch-3M 226

	7.5ips	15ips	30ips
Linear, RMS 30Hz - 20kHz	61dB	59dB	62dB
RMS value, ASA-A weighted according to IEC-publ. 179 (DIN 45633)	66dB	64dB	67dB

Signal to-noise ratio record/sync mode:

Equalization relative to 510nWb/m magnetic tape Scotch-3M 226

	7.5ips	15ips	30ips
RMS value, ASA-A weighted according to IEC-publ. 179 (DIN 45633)	65dB	63dB	67dB

NAB and CCIR

Harmonic distortion record/reproduce mode:

1kHz, 510nWb/m

	7.5ips	15ips	30ips
max.:	1,0%	1,0%	1,0%

Channel separation: According to DIN 45521, 1kHz ≥55dB

Erase efficiency: 1kHz, 510nWb/m 38cm/s (15ips) ≥75dB

Power requirements: (at nominal voltage):

Idle approx.:	100VA
Recording approx.:	200VA
Spooling approx.:	220VA
Max. power consumption:	360VA

Admissible power failure:

- For retaining the operational state max. **100ms**.

1.5.5 Dimensions A807 MKII 1/4" (in mm)

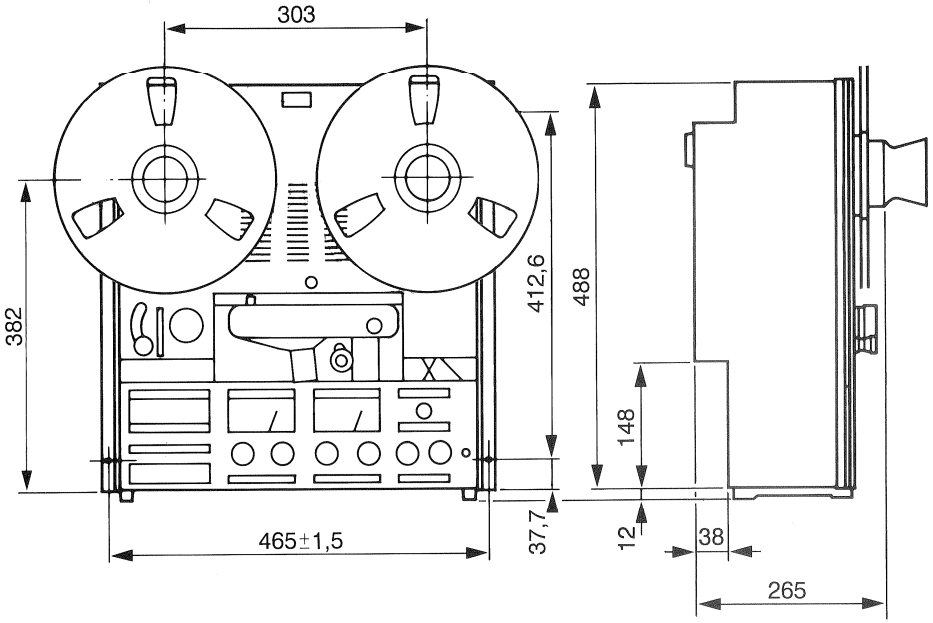

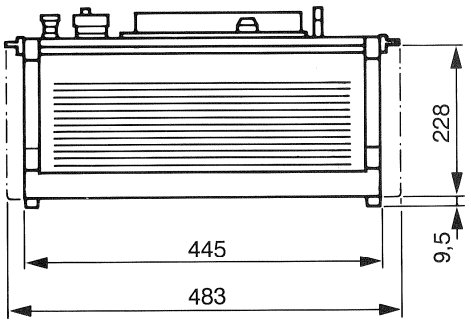

Dimensions A807 MKII 1/4" (in mm)

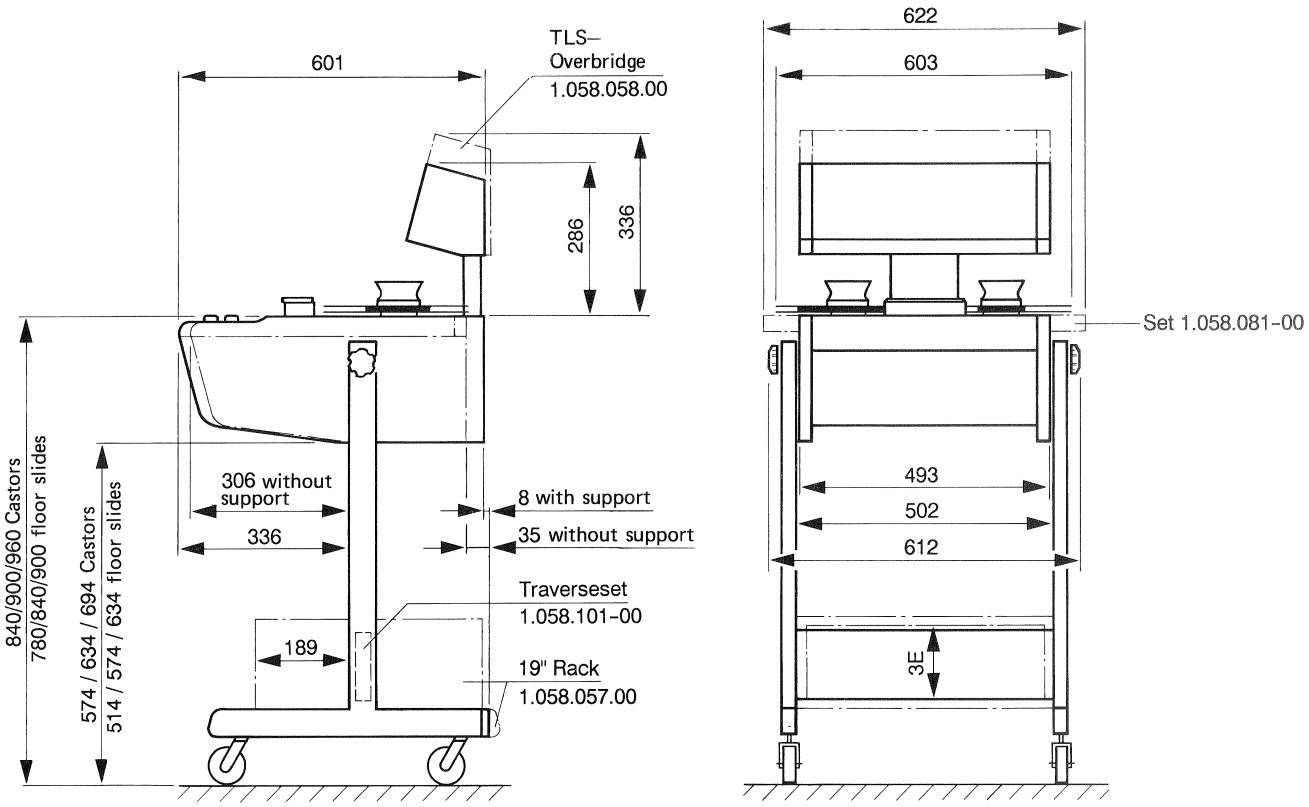

1.5.6 Dimensions A807 MKII 1/2" (in mm)

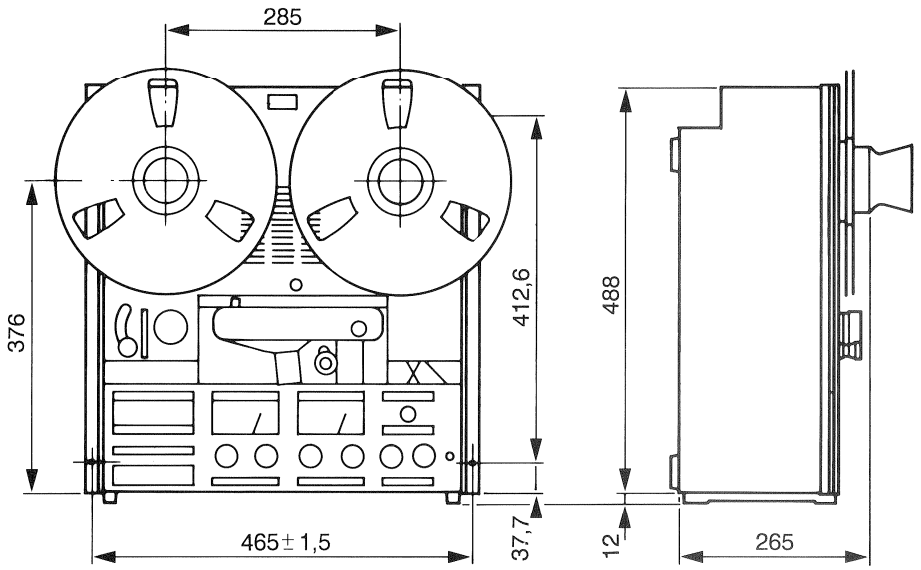

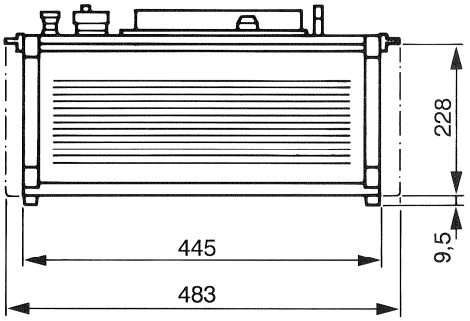

Dimensions A807 MKII 1/2" (in mm)

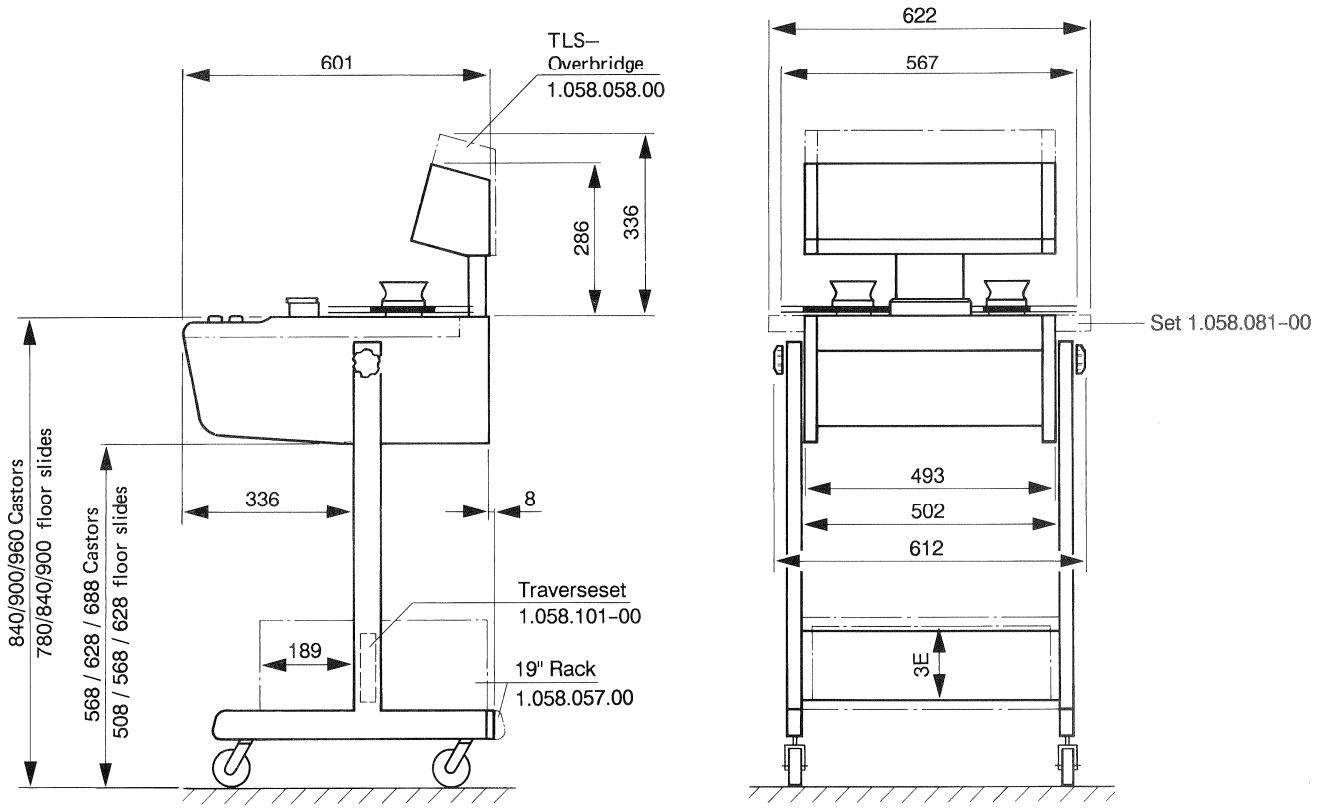

Packing:

Tape recorder with VU meter panel:
Box: 82 x 84 x 120/126/132 cm (depending on console hight).

Tape recorder without VU meter panel:
Box: 82 x 84 x 93/99/105 cm (depending on console hight).

Gross weight:

Depending on configuration: 73...119kg.

1.6 Instructions for service personal

1.6.1 Abbreviations

A	Assenbly
ANT	Antenna
B	Bulb
BA	Battery, rechargeable battery
BR	Optocupler (bulb --> LDR)
C	Capacitor
D	Diode, DIAC
DL	LED
DLQ	Optocupler (LED --> phototransistor)
DLR	Optocopler (LED --> LDR)
DLZ	LED-array, 7-segment-display
DP	Photodiode
DZ	Rectifier
E	Electronic component
EF	Headphones
F	Fuse
FL	Filter
H	Head (audio, erase)
HC	Hybrid-circuit (thick-/thin-film)
HE	Hall-element
IC	Integrated circuit
J	Socket (female)
JS	Jumper
K	Relay, contactor
L	Inductor
LS	Loudspeaker
M	Motor
ME	Meter
MIC	Microphone
MP	Mechanical part
P	Connector (male)
PU	Phone cartridge
Q	Transistor, FET, Thyristor, TRIAC
QP	Phototransistor
QPZ	Phototransistor-array
R	Resistor
RP	Light-sensitive resistor, LDR
RT	Temperature-dependent resistor
RZ	Resistor network
S	Switch
T	Transformer
TL	Delay line
TP	Test point, test socket
W	Wire, standard wire
X	Base, holder
XB	Lamp base
XF	Fuse holder
XIC	IC-socket
Y	Crystal, piezo element
Z	Network, array

1.6.2 Powers of ten

Designation	Abbreviation	Value
Tera-	T	10^{12}
Giga-	G	10^{9}
Mega-	M	10^{6}
Kilo-	k	10^{3}
Milli-	m	10^{-3}
Mikro-	μ	10^{-6}
Nano-	n (mμ)	10^{-9}
Pico-	p ($\mu\mu$)	10^{-12}
Femto-	f	10^{-15}

( ) = Abbrevation commonly used in the USA

1.6.3 Letters and color codes

Resistors:

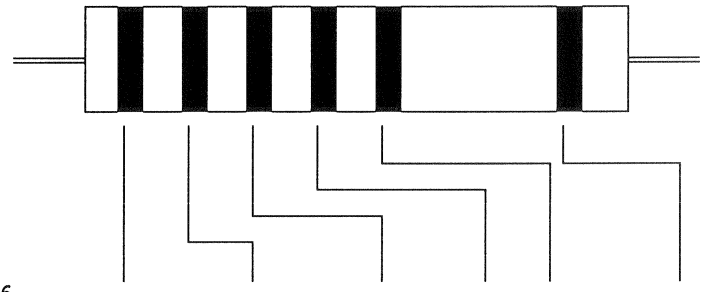

Standard series:

E6
E12 } 1st digit 2nd digit Mult. Tol. --- ---
E24

E48 1st dig. 2nd digit 3.dig. Mult. Tol. TK

Color	Digit	Multiplier	Tolerance	TK
silver	-	0,01	10,0%	-
gold	-	0,1	5,0%	-
black	0	1	-	-
brown	1	10	1,0%	100×10^{-6}/K
red	2	100	2,0%	50×10^{-6}/K
orange	3	1k	-	15×10^{-6}/K
yellow	4	10k	-	25×10^{-6}/K
green	5	100k	0,5%	-
blue	6	1M	0,25%	-
violet	7	10M	0,1%	-
grey	8	-	-	-
white	9	-	-	-

No TK-designation = 50×10^{-6}/K
Only 1 black ring = 0Ω (jumper)

Examples:

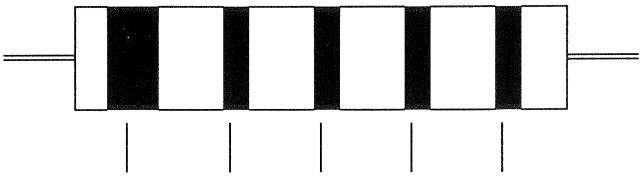

silver	gold*	brown	green	silver	=	0,15µH
|	|	|	|	|		10%
silver	rot	gold*	violet	-----	=	2,7µH
|	|	|	|	|		20%
silver	grey	red	brown**	gold	=	820µH
						5%

* Decimal point
** Multiplier

Inductors and transformers on ferrite cores:

Inductors and transformers on ferrite cores are marked with three colored dots (color coding same as in the two left-hand columns of the Section "Resistors"). These dots designate the last three digits of the STUDER standard number. The large dot marks the start. The first digits of the standard number (1.022.--- are always the same.)

Example:

- Driver transformer, 150kHz.
- Standard number: 1.022.211
- Color code: red (large dot), brown, brown

Terminal 1 of the winding form is usually identified with a lobe; if not, the winding form is marked with a yellow dot near terminal 1.

Capacitors:

Frequently, the tolerance is specified by a letter behind the printed capacitance rating:

D	= 0,5%
F	=1%
G	=2%
J	=5%
K	=10%
M	=20%

Molded RF coils:

For identifying molded RF coils, a wide silver ring and four narrow rings of different colors are used. The wide silver ring marks the start of the counting direction. The second, third, and fourth ring specify the inductance in Microhenry (μH). The second and the third ring designate the numeric value and the fourth ring is either a multiplier, or if its color is gold, the decimal point. The fifth ring designates the tolerance in percent (±).

Color	Digit	Multiplier	Tolerance
gold	-	-	5%
silver	-	-	10%
black	0	1	-
brown	1	10	1%
red	2	100	2%
orange	3	10^3	-
yellow	4	10^4	-
green	5	10^5	0,5%
blue	6	10^6	-
violet	7	10^7	-
grey	8	10^8	-
white	9	10^9	-
without	-	-	20%

2 Start up procedure, operating

2.1 Unpacking and Checking 1

2.2 Installation Site and Setup 1
2.2.1 Assembling the console 1

2.3 Connectors 1/4" version 3
Connectors 1/2"-channel version 4
2.3.1 Power connection, voltage selector 5
2.3.2 Audio inputs and outputs 6
2.3.3 Remote control connectors 6
2.3.4 Headphones socket 15

2.4 Operating instructions 16
2.4.1 Controls 16
2.4.2 Power switch [1] 30
2.4.3 Indications at power on time 30
2.4.4 Inserting the tape 31
2.4.5 Tape speed [50] 33
2.4.6 Play mode [33] 33
2.4.7 Reverse play mode 33
2.4.8 Varispeed control [52] 34
2.4.9 Record mode REC [35] 34
2.4.10 SYNC reproduction SYNC [38] 35
2.4.11 Spooling mode < > [31/32] 36
2.4.12 Producing pancakes at reduced spooling speeds 36
2.4.13 Stop mode STOP [34] 36
2.4.14 Locator Z-LOC, LOC1 (LOC2, LOC3, LOC START) [24-27] 37
2.4.15 Programmable functions 38
2.4.16 Fader start 40
2.4.17 Tape timer [22] 41
2.4.18 Auxiliary timer LAP [20] 42
2.4.19 MONO/INSERT [55] (not available by 4-channel versions) 43
2.4.20 Remote control 44
2.4.21 External VU-meter panel 44
2.4.22 External stereo monitor panel 44
2.4.23 Test generator (option) (only for 2-channel versions) 45
2.4.24 Editing, cutting the tape 46
2.4.25 "Waste basket mode" TAPE DUMP [30] 47

2.5 Programming 50
2.5.1 Hardware jumpers 1/4" and 1/2" versions 50
2.5.2 Soft jumpers (for all versions) 54
2.5.3 Programming the audio parameters 59

2.6 Serial interface RS232 61
2.6.1 RS 232 Standard interface 61
2.6.2 RS 232 Interface of the A807 62
2.6.3 Working with the serial interface RS 232 63

2.7 Care instructions 69

2.1 Unpacking and Checking

The A807 tape recorder is shipped in a special packing that protects the machine from damage in transit. Care should be exercised when unpacking the machine so that its surfaces do not become marred.
Check that the material is complete by comparing the packing content with the shipping list.

Save the original packing material

because it provides the best protection in case your tape recorder needs to be transported again.
Check all items for possible damage in transit. If you discover any damage, immediately notify the forwarding agent as well as the nearest STUDER dealer.

2.2 Installation Site and Setup

The A807 should be installed in a dust-free and an adequately ventilated environment. The performance data of the tape recorder are guaranteed for an ambient temperature range of 0°C to +40°C with a relative humidity of 20% to 90% (noncondensing).

Install the tape recorder in such a way that sufficient space is available all around the machine for unobstructed cooling. Particularly in recessed locations there is a possibility of heat accumulation. When the machine is in operation, the air circulation zone should neither be misused as a storage area nor be obstructed with manuals etc.

The tape recorder must not be installed in the vicinity of strong electromagnetic fields. General sources of interference are: strong load fluctuations on adjacent power circuits, high-power transformers, elevator motors, electrical welding plants, as well as nearby radio and television transmitters.

2.2.1 Assembling the console

The console is shipped in disassembled condition.
First screw the console legs [3] to the traverse [4] or to the rack base [5] by means of the four yellow galvanized M6x14mm [1] and M6x16mm screws [2] respectively and the serrated washers, and close the lead-through holes with the four plastic caps.
Subsequently insert the casters [6] into the holes of the console legs [3]. The two lockable casters fit into the tapered, longer legs on the front. The height of the casters can be adjusted with the headless screws [7] in the legs, directly above the casters. Remove any rack-mount brackets or side panels that may still be present. The feet and the two upper screws located underneath on the front of the equipment should also be removed.
Install the handrest [8] with the four M4x10mm screws [9] on the front of the equipment. (The upper two screws are to be installed with lock washers).

CONSOLE WITH OVERBRIDGE 1/4"

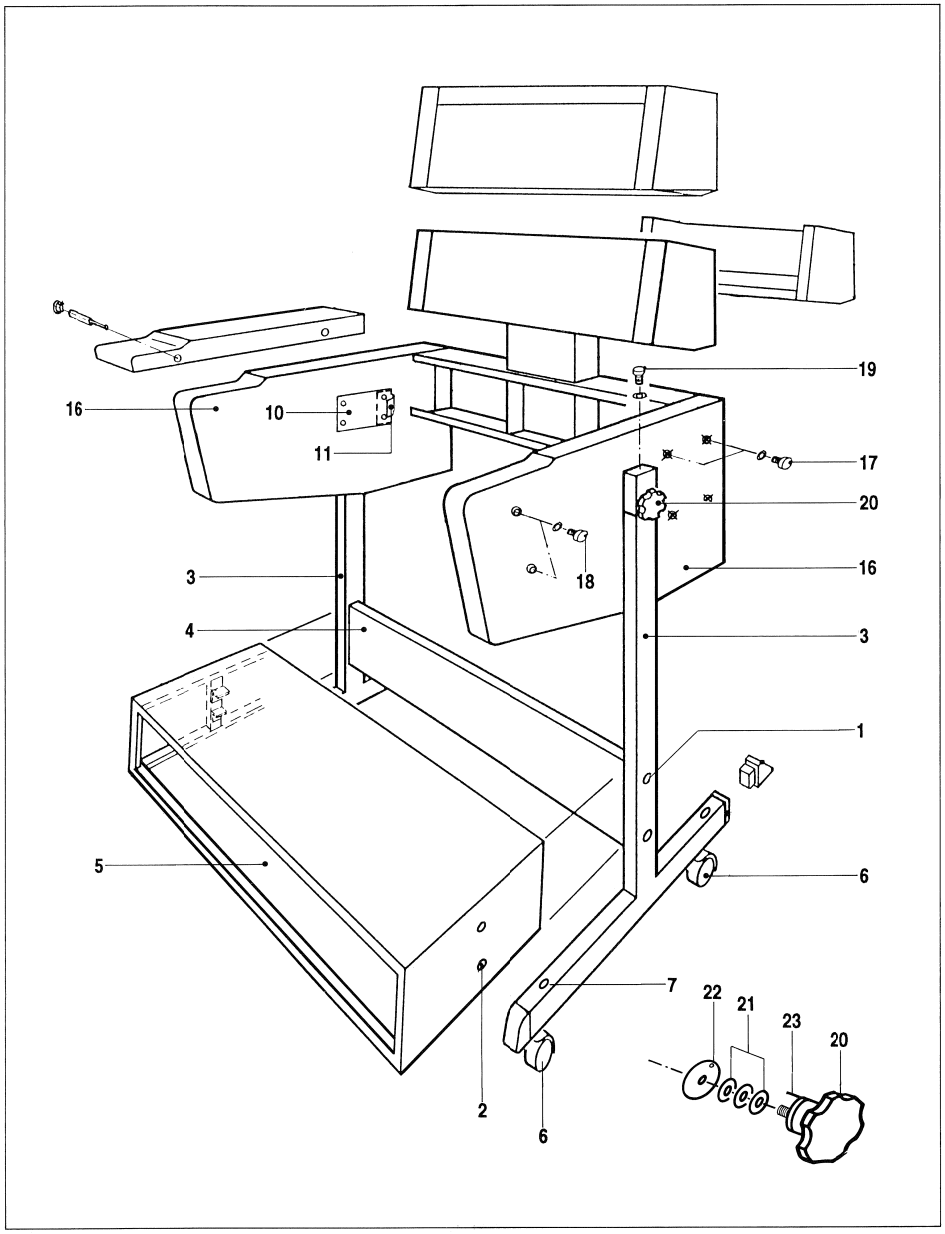

Console without rack base and penthouse:

Fasten each wooden side panels to the machine with 4 burnished M5x30mm screws and washers.

Console with rack base

Remove the two rear fixing screws of the pivot pin flange [10] in the wooden side panels and loosen the two front screws by 2 – 3 turns. Slide the perforated part of the U-shaped contact tab [11] between the wooden side panel and the rear section of the pivot pin flange. Reinsert the countersunk-head screws and tighten all four screws. In case no penthouse has to be installed, fasten each wooden side panel to the machine with 4 burnished M5x30mm screws and lock washers, otherwise proceed directly to the installation instruction: console with penthouse.

Console with penthouse

Fasten each of the L-shaped connection plates [12] with two M5 bolts [13] on the rear of the machine sides. Screw the penthouse traverse [14] with the remaining four M5 bolts [15] to the connection plates [12]. Fasten each wooden side panel [16] with 4 burnished M5x18mm [17] and 2 M5x30mm screws [18] and washers to the machine.
Set the machine on the console frame and fasten it on both sides with 2 M5 x 50mm screws [19]. If the operating position of the machine needs to be changed frequently, the two hexagon-socket-head screws can be replaced by the bypacked starwheels [20]. When installing these wheels make sure that the disc springs [21] and the pressure discs [22] are reinstalled in their original sequence.

Important

The locking pin [23] must engage in the hole of the pressure disc [22]!

A807 MKII 1/2" with 4 canal panel

HAND REST AND OVERBRIDGE SUPPORT

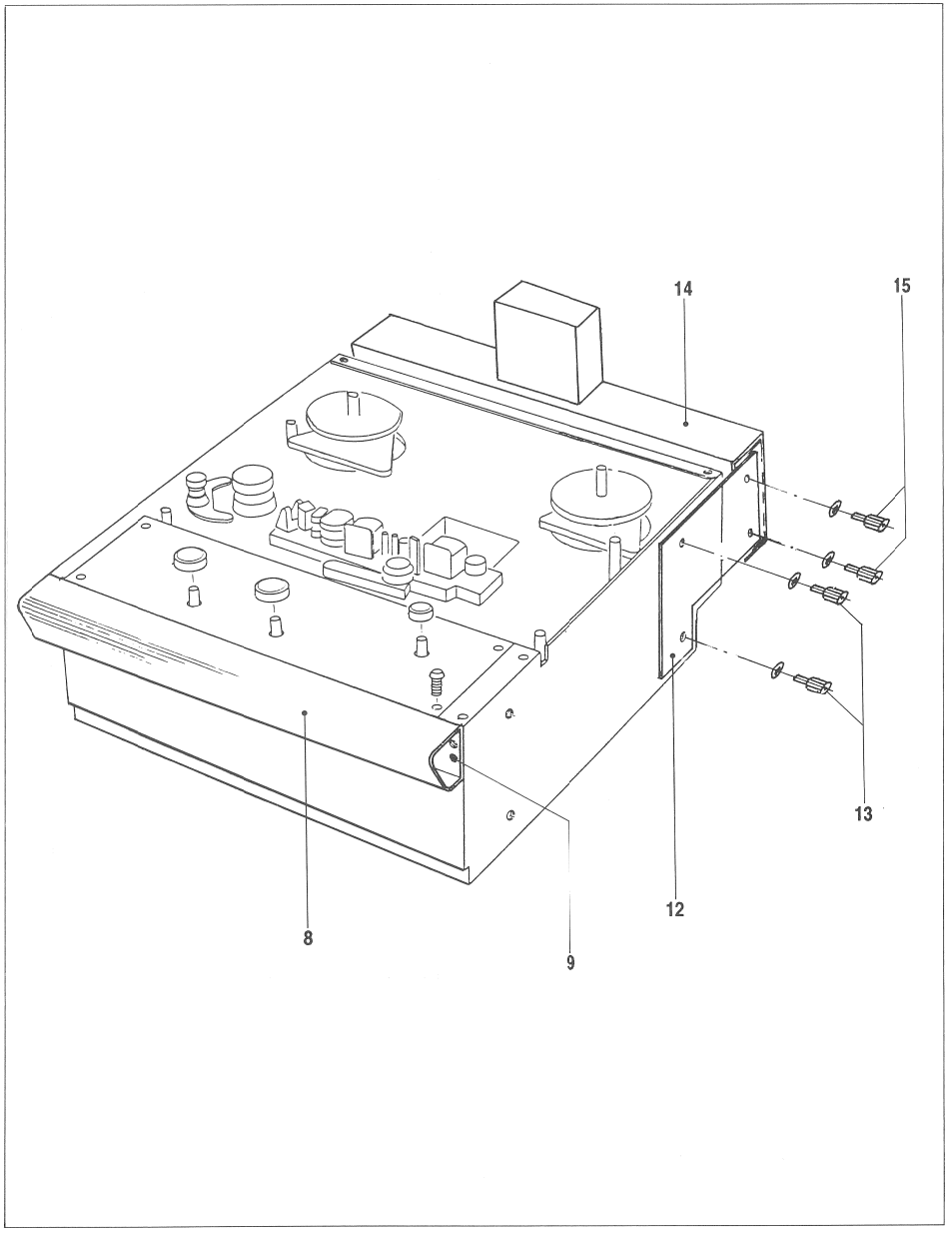

EDITION: 5. Oktober 1994

2.3 Connectors 1/4" version

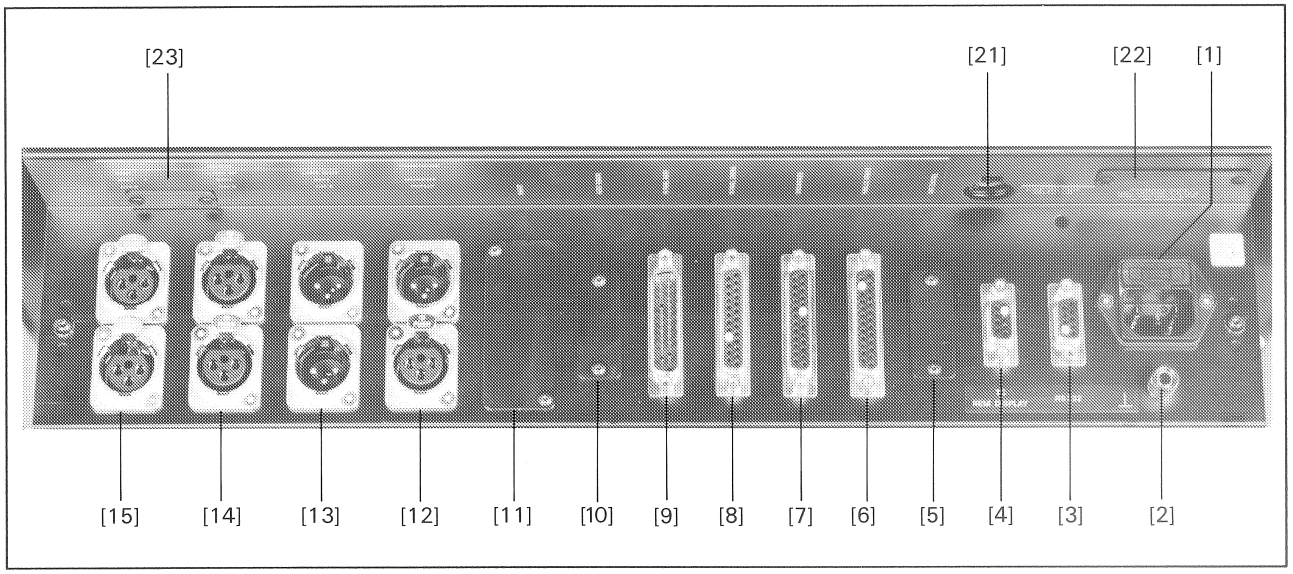

Fig 2.3.1

[1] AC POWER	Power inlet with primary fuse
[2]	Ground socket
[3] RS 232	Serial interface
[4] TC REM. DISPLAY	Connector for timecode remote display
[5] NRS CONTROL	Connector for the control of a noise reduction system
[6] PARALLEL REMOTE	Connector for parallel remote control
[7] SYNCHRONIZER	Connector for optional synchronizer (standard by TC versions, otherwise option)
[8] VU PANEL CONTROL	Connector for instrument panel (only VUK versions)
[9] VU PANEL AUDIO	Connector for instrument panel (only VUK versions)
[10] AUDIO REMOTE	Connector for the audio channel remote control functions
[11] INSERT	Connector for the insert points of external units (filter) in the record- and/or reproduce path of the A807. or: symmetric AUX INPUT by versions with Stereo monitor panel.
[12] TC INPUT/OUTPUT	Timecode in/output
[13] LINE OUT CH1/CH2	Output channel 1 + 2
[14] LINE IN CH1/CH2	Input channel 1 + 2

[15] MIC CH1/CH2	Microfon input channel 1 + 2
[21] LINE VOLTAGE	Power, voltage selector
[22] ELAPSE COUNTER	Time meter, working hour (option)
[23] PHANTOM POWERING	Switches the phantom power on and off. Connectors 1/2" 4-channel version

Connectors 1/2" 4-channel version

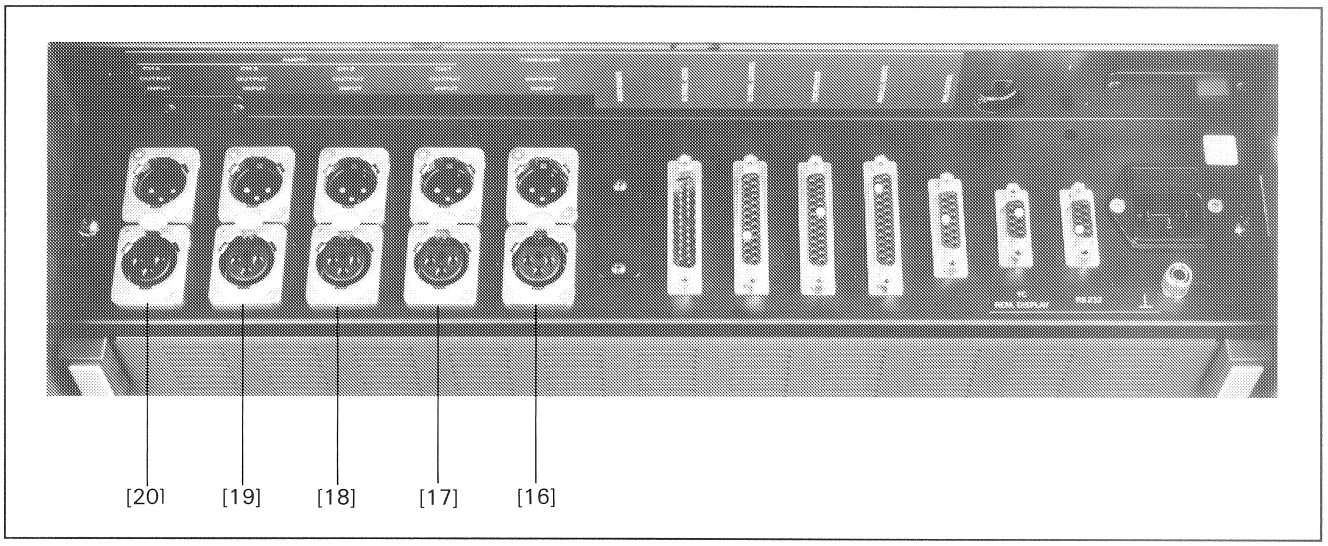

Fig. 2.3.2

[1]...[10]		Same configuration with 1/4" version.
[16] TIMECODE	**IN/OUT**	Timecode in/output
[17] LINE IN/OUT	**CH1**	Line in/output channel 1
[18] LINE IN/OUT	**CH2**	Line in/output channel 2
[19] LINE IN/OUT	**CH3**	Line in/output channel 3
[20] LINE IN/OUT	**CH4**	Line in/output channel 4

2.3.1 Power connection, voltage selector

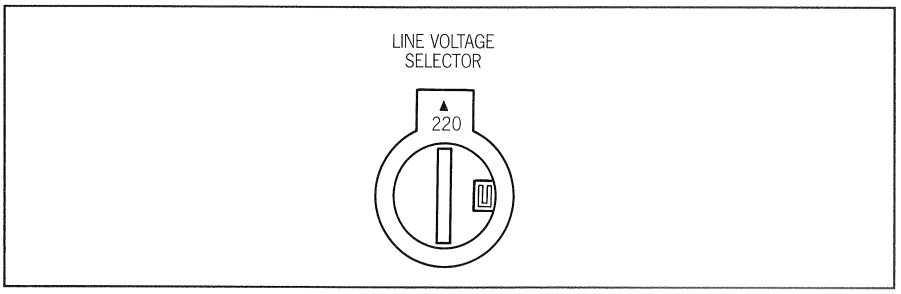

Fig. 2.3.3

Important: Before you connect the recorder to the AC power source for the first time, check that the setting of the line voltage selector (Fig. 2.3.3) agrees with your local line voltage.
The following voltage can be set:

100, 120, 140, 200, 220, 240 VAC, ±10%; 50 to 60 Hz.

Disconnect the recorder from the AC outlet before you make any changes! Adjust the line voltage selector with a screwdriver so that the required voltage rating becomes visible through the cutout in the housing.

After the line voltage has been adjusted, the power fuse in the power inlet may possibly have to be replaced with a correctly rated fuse. Lift the cap with the aid of a screw driver. The upper of the two fuses is the spare fuse.

100 V - 140 V AC: T 3,15 A/250 V (SLOW) 200 V - 240 V AC: T 1,60 A/250 V (SLOW)

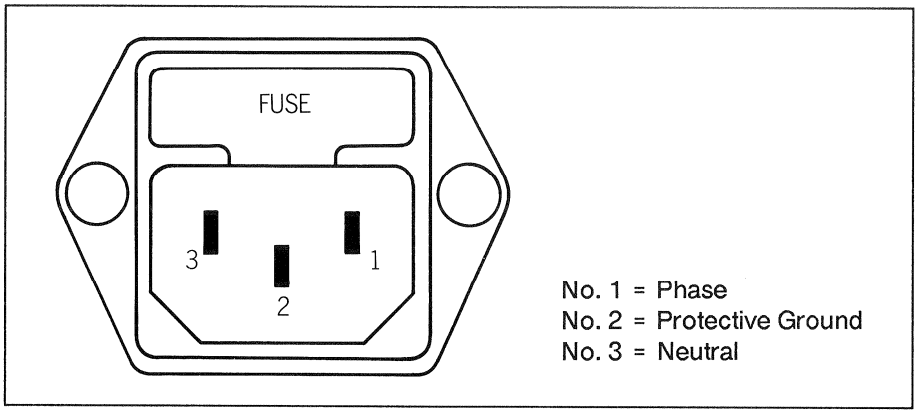

Fig. 2.3.4

2.3.2 Audio inputs and outputs

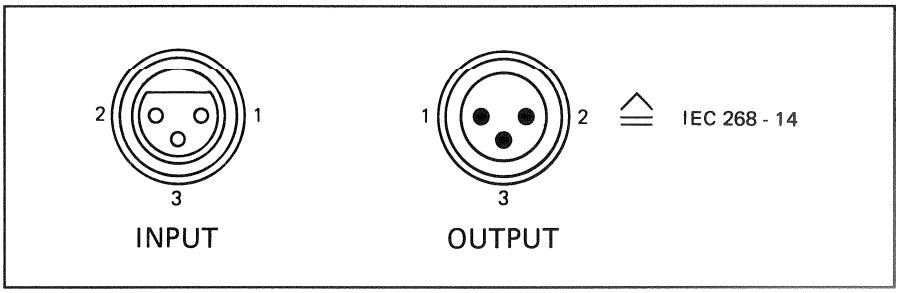

Fig. 2.3.5

The balanced inputs and outputs are terminated on XLR sockets or connectors (described in the IEC recommendation 268–14).

Pin 1 = AUDIO SHIELD
Pin 2 = A-LINE (HOT)
Pin 3 = B-LINE (COLD)*

This configuration refers to inputs and outputs of the line and TC signals as well as to the microphone inputs. The microphone phantom power (48V or optionally 12V) can be enabled or disabled with switch [23] (Fig. 2.3.1).

* In unbalanced operation the wiring "B" is necesary to change on 0 Volt socket.

2.3.3 Remote control connectors

RS 232

Connector for a serial RS 232 connection with a max. lenght of 10m.

Connector set:	Part No. 20.020.303.40

Pin assignment of the RS 232 connector

PIN	SIGNAL NAME	COMMENT
01	---	
02	SN-DATA	DATA signal output from A807
03	---	
04	---	
05	+24V RMT	24V supply (max. 300mA)
06	KEY	
07	---	
08	RCV DATA	DATA signal input to A807
09	0.0V	Ground

TC Remote display

Connector for remote timecode data display

Connector set:	Part No. 20.020.303.20

Pin assignment of the TC remote display connector

PIN	SIGNAL NAME	COMMENT
01	---	
02	TX-DSPLY	DATA for Timecode display
03	DSP-DTCT	CLOCK
04	KEY	
05	+24V RMT	+24V supply (max. 300mA)
06	---	
07	---	
08	---	
09	0.0V	Ground

NRS control

Connector for the control of an externally connected noise control system

Connector set:	Part No. 20.020.303.33

Pin assignment of the NRS control connector

PIN	SIGNAL NAME		COMMENT
01	B-DBY-01	*	Control Signal for Dolby System CH 1
02	B-DBY-02	*	Control Signal for Dolby System CH 2
03	B-DBY-03	*	Control Signal for Dolby System CH 3
04	B-DBY-04	*	Control Signal for Dolby System CH 4
05	B-TLC-01	▲	Control Signal for Telcom System CH 1
06	B-TLC-02	▲	Control Signal for Telcom System CH 2
07	B-TLC-03	▲	Control Signal for Telcom System CH 3
08	B-TLC-04	▲	Control Signal for Telcom System CH 4
09	---		
10	---		
11	---		
12	KEY		
13	---		
14	+24V		+24V supply (max. 300mA)
15	0,0V		Ground

* Open collector output, aktiv LOW. No internal pull-up resistor. Max. level 30V. max power 200mA.

▲ Open collector output, same up, still activ HIGH.

Parallel remote control connector

A parallel remote control with the following capabilities can be connected to this 25-pin connector (female, D-type):

- Remote control of the tape transport functions with feedback (<, >, PLAY, STOP, REC).
- RESET TIMER (resets the tape timer to 00.00.00).
- ZERO LOC (automatically searches the tape timer address 00.00.00).
- LOC START (automatically searches the tape address at which the last PLAY or RECORD command was entered).
- LIFTER (disables the tape lifter in spooling mode).
- FADER (enables the fader start circuit).
- VARISPEED (variable tape speed).

Connector set	Part No. 20.020.303.16

Pin assignment of the PARALLEL REMOTE connector:

PIN	SIGNAL NAME		DESIGNATION
01	+0.0		Ground (GND, 0V)
02	BR-REW	*	Status indicator lamp REWIND
03	BR-FORW	*	Status indicator lamp FORWARD
04	BR-VRSPD	*	Status indicator lamp VARISPEED (alternatingly LOW and HIGH when active)
05	SR-VRSPD	▲	Switch for VARISPEED command
06	SR-FADRY	▲	Switch for FADER START READY command
07	BR-LOCST	*	Status indicator lamp LOC START
08	BR-FADRY	*	Status indicator lamp FADER START READY
09	BR-REC	*	Status indicator lamp RECORD
10	SR-RESET	▲	Switch for RESET TIMER command
11	FAD1		Input FADER START command, line A
12	FAD2		Input FADER START command, line B (FADER START is active when 5 to 24V DC or AC are available across pins 11 and 12).
13	IR-REFEX		Input for external capstan PLL reference (nominal: 9.6kHz, TTL level recommended; max. input voltage +10V).
14	SR-0LOC	▲	Switch for ZERO LOC command
15	BR-PLAY	*	Status indicator lamp PLAY
16	BR-STOP	*	Status indicator lamp STOP
17	SR-LIFT	▲	Switch for LIFTER command
18	SR-LOCST	▲	Switch for LOC START command
19	SR-REC	▲	Switch for RECORD command
20	SR-REW	▲	Switch for REWIND command
21	SR-FORW	▲	Switch for FORWARD command
22	SR-PLAY	▲	Switch for PLAY command
23	SR-STOP	▲	Switch for STOP command
24	KEY		Connector coding
25	+24 VRMT		+24V supply (max. 300mA)

* Open collector output, active LOW. No internal pull-up resistor. Maximum HIGH level +30V, maximum current 200mA (built-in current limiting resistor 22Ω).

▲ Switch input. LOW level activates the command. Internal pull-up resistor, 3,9kΩ to +24V. Maximum HIGH level = +30V.

Logical levels:	LOW =	0V bis +4V
	HIGH =	+7,5V bis +30V

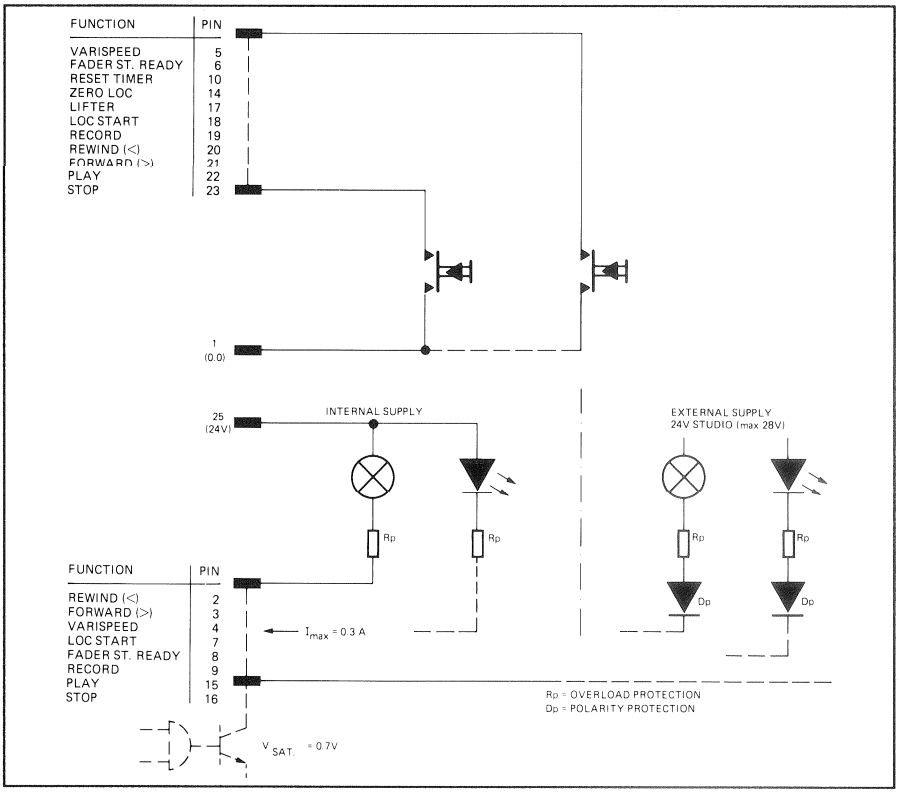

Fig. 2.3.6 Connection diagram, parallel remote control.

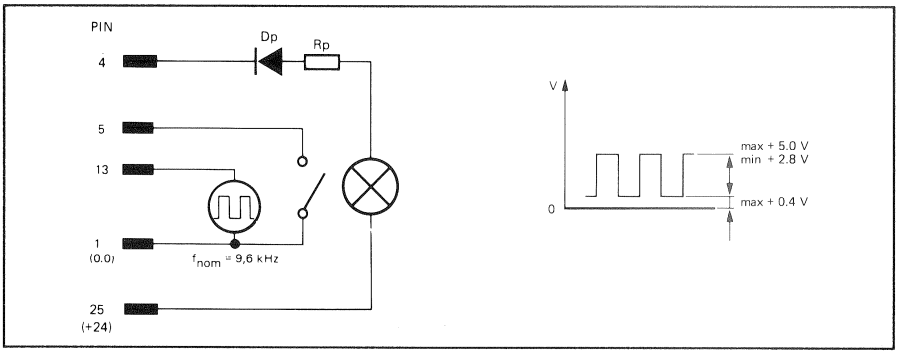

Fig 2.3.7 Connection diagram, varispeed control.

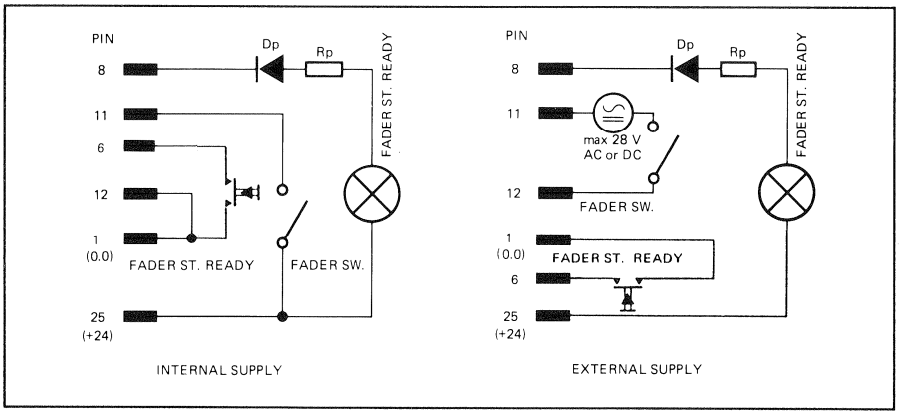

Fig. 2.3.8 Connection diagram, fader start circuit.

Important:

When incandescent bulbs are used as status indicator lamps, their inrush current must not exceed 0.3 A!

Connector for external synchronizer

A 25-pin connector (female, D-type) is available for connecting an external synchronizer.

Connector set	Part No. 20.020.303.15

Pin assignment of the SYNCHRONIZER connector:

PIN	SIGNAL NAME		DESIGNATION
01	+ 0,0		Ground (GND, 0 V)
02	BR-REW	*	Status indicator lamp REWIND
03	BR-FORW	*	Status indicator lamp FORWARD
04	BR-VRSPD	*	Status indicator lamp VARISPEED (alternatingly LOW and HIGH when active).
05	SR-VRSPD	▲	Switch for VARISPEED command
06	---		
07	OR-MVCLK	*	Output for TAPE MOVE CLOCK signal (16 pulses/s at 7.5 ips, pulse duty factor 50%).
08	KEY		Connector coding
09	BR-REC	*	Status indicator lamp RECORD
10	OR-MVDIR	*	Output for TAPE MOVE DIRECTION signal (REW. = LOW, FORW. = HIGH).
11	OR-CMCLK	*	Output for CAPSTAN MOTOR MOVE CLOCK signal (1200 pulses/s at 7.5 ips).
12	OR-SYENB	*	Output for SYNCHRONIZER ENABLE signal (LOW when tape is tensioned and the recorder. is operational, HIGH when the tape is not tensioned).
13	IR-REFEX		Input for external capstan PLL reference (nominal: 9.6 kHz, TTL level recommended; max. input voltage +30 V).
14	+ 0.0		Ground (GND, 0 V)
15	BR-PLAY	*	Status indicator lamp PLAY
16	BR-STOP	*	Status indicator lamp STOP
17	SR-LIFT	▲	Switch for LIFTER command
18	SR-MUTE	▲	Switch for MUTE command (no influence on time code channel)
19	SR-REC	▲	Switch for RECORD command
20	SR-REW	▲	Switch for REWIND command
21	SR-FORW	▲	Switch for FORWARD command
22	SR-PLAY	▲	Switch for PLAY command
23	SR-STOP	▲	Switch for STOP command
24	KEY		Connector coding
25	+ 24VRMT		+24 V supply (max. 300 mA)

* Open collector output, active LOW. No internal pull-up resistor. Maximum HIGH level +30 V, maximum current 200 mA (built-in current limiting resistor 22 Ω).

▲ Switch input. LOW level activates the command. Internal pull-up resistor, 3,9 kΩ to +24 V. Maximum HIGH level = +30 V.

Logical levels:	LOW =	0 V bis + 4 V
	HIGH =	+7,5V bis +30 V

VU PANEL CONTROL

Connector for the operation of a VU meter panel.

Pin assignment of the VU panel connector: 2-channel.

PIN	SIGNAL NAME	DESIGNATION
01	0,0	Ground (GND, 0 V)
02	+ 5.6V	Supply voltage
03	+ 15V	Supply voltage
04	---	
05	EXT-D5	Panel matrix
06	EXT-D6	Panel matrix
07	EXT-D7	Panel matrix
08	---	
09	---	
10	EXT-DATA	Externel panel, date
11	EXT-CLK	Externel panel, clock
12	EXT-ENLD	Externel panel, enable LED
13	---	
14	0.0	Ground (GND, 0 V)
15	---	
16	---	
16	- 15 V	Supply voltage
17	KEY	Code
18	---	
19	---	
20	---	
21	---	
22	---	
23	---	
24	---	
25	---	

Pin assignment of the VU panel connector: 4-channel.

PIN	SIGNAL NAME	DESIGNATION
01	+ 0,0VD	Digital ground (GND, 0 V)
02	+ 5,6V	Supply voltage
03	+ 15V	Supply voltage
04	---	
05	EXT-D4	Panel matrix
06	EXT-D5	Panel matrix
07	EXT-D6	Panel matrix
08	EXT-D7	Panel matrix
09	---	
10	---	
11	---	
12	A-VUMTR1	Audio VU-meter signal 1
13	A-VUMTR2	Audio VU-meter signal 2
14	0,0VA	Audio ground (0 V)
15	---	
16	-15V	Supply voltage
17	KEY	Code
18	EXT-DATA	Externel panel data
19	EXT-CLK	Externel panel clock
20	EXT-ENMX	Externel panel enabel matrix
21	EXT-ENLD	Externel panel enabel LED
22	---	
23	---	
24	A-VUMTR3	Audio VU-meter signal 3
25	A-VUMTR4	Audio VU-meter signal 4

VU PANEL AUDIO

Connector for the operation of a VU meter panel

Pin assignment of the VU meter connector: 2-channel AUDIO.

PIN	SIGNAL NAME	DESIGNATION
01	A-LVOUA1	Audio, to output level 1 control potentiometer.
02	A-LVOUC1	Audio, ground for output-level 1 potentiometer.
03	A-LVINB1	Audio, from input level 1 control potentiometer.
04	0 AUDIO	0V Audio
05	A-MONIT1	Audio, monitor signal 1
06	A-PHIN1	Audio, headphone amplifier input 1
07	A-LSA	Audio, headphone amplifier output A
08	A-LVOUA2	Audio, to output level 2 control potentiometer.
09	A-LVOUC2	Audio, ground for output level 2 potientiometer.
10	A-LVINB2	Audio, from input level 2 control potentiometer.
11	KEY	Code
12	A-MONIT2	Audio, monitor signal 2
13		
14	A-LVOUB1	Audio, from output level 1 contr. potentiometer.
15	A-LVINC1	Audio, ground for input level 1 potentiometer.
16	A-LVINA1	Audio, to input levell 1 control potentiometer.
17	KEY	Code
18	A-PREOU1	Audio, preamplifier output 1
19	A-PHIN2	Audio, headphone amplifier input 2
20	A-LSB	Audio, loudspeaker amplifier output B
21	A-LVOUB2	Audio, from output level 2 contr. potentiometer.
22	A-LVINC2	Audio, ground for input level 2
23	A-LVINA2	Audio, to input level 2 control potentiometer.
24	---	
25	A-PREOU2	Audio, preamplifier output 2

Pin assignment of the VU meter connector: 2-channel AUDIO.

PIN	SIGNAL NAME	DESIGNATION
01	A-LVINA1	Audio, to input level 1 control potentiometer.
02	A-LVINB1	Audio, from input level 1 control potentiometer.
03	A-LVINC1	Audio, ground for input level 1 control pot.
04	A-LVOUA1	Audio, to input level 1 control potentiometer.
05	A-LVOUB1	Audio, from input level 1 control potentiometer.
06	A-LVOUC1	Audio, ground for input level 1 control pot.
07	KEY	Code
08	A-LVINA2	Audio, to input level 2 control potentiometer.
09	A-LVINB2	Audio, from input level 2 control potentiometer.
10	A-LVINC2	Audio, ground for input level 2 control pot.
11	A-LVOUA2	Audio, to input level 2 control potentiometer.
12	A-LVOUB2	Audio, from input level 2 control potentiometer.
13	A-LVOUC2	Audio, ground for input level 2 control pot.
14	A-LVINA3	Audio, to input level 3 control potentiometer.
15	A-LVINB3	Audio, from input level 3 control potentiometer.
16	A-LVINC3	Audio, ground for input level 3 control pot.
17	A-LVOUA3	Audio, to input level 3 contr. potentiometer.
18	A-LVOUB3	Audio, from input level 3 control potentiometer.
19	A-LVOUC3	Audio, ground for input level 3 control pot.
20	A-LVINA4	Audio, to input level 4 contr. potentiometer.
21	A-LVINB4	Audio, from input level 4 control potentiometer.
22	A-LVINC4	Audio, ground for input level 4 control pot.
23	A-LVOUA4	Audio, to input level 4 control potentiometer.
24	A-LVOUB4	Audio, from input level 4 control potentiometer.
25	A-LVOUC4	Audio, ground for input level 4 control pot.

AUDIO REMOTE

Connector for the control of the Audio switching

Pin assignment of the audio remote connector:

PIN	SIGNAL NAME	DESIGNATION
01	0.0VD	Ground (GND, 0V)
02	ARC-DATA	Audio remote control data
03	ARC-CLK	Audio remote control clock
04	ARC-MXEN	Audio remote control enable matrix
05	ARC-LDEN	Audio remote control enable LED
06	ARC-DPEN	Audio remote control enable display
07	KEY	Connector coding
08	+0.0VD	Digital ground (GND, 0V)
09	----	
10	ARC-D0	Panel matrix
11	ARC-D7	Panel matrix
12	ARC-D6	Panel matrix
13	ARC-D5	Panel matrix
14	ARC-D4	Panel matrix
15	+24V RTM	+24V supply (max. 300mA)

Insert

Connector for insert routing

Connector set:	Part No. 20.020.303.12

Pin assignment of the insert routing connector:

PIN	SIGNAL NAME	BEDEUTUNG
01	A-PRAS-1	Cabel screen
02	A-PRAA-1	Audio, from preamplifier CH1
03	A-PRAB-1	Audio, from preamplifier CH1
04	A-RINS-1	Cabel screen
05	A-RINA-1	Audio, to the record amplifier CH1
06	A-RINB-1	Audio, to the record amplifier CH1
07	A-PRAS-2	Cabel screen
08	A-PRAA-2	Audio, from preamplifier CH2
09	A-PRAB-2	Audio, from preamplifier CH2
10	A-RINS-2	Cabel screen
11	A-RINA-2	Audio, to the record amplifier CH2
12	A-RINB-2	Audio, to the record amplifier CH2
13	INSRT-ON	Insert on.
14	A-TAPS-1	Cabel screen
15	A-TAPA-1	Audio, from reproduce amplifier CH1
16	A-TAPB-1	Audio, from reproduce amplifier CH1
17	A-DRVS-1	Cabel screen
18	A-DRVA-1	Audio, to the output amplifier CH1
19	A-DRVB-1	Audio, to the output amplifier CH1
20	A-TAPS-2	Cabel screen
21	A-TAPA-2	Audio, from reproduce amplifier CH2
22	A-TAPB-2	Audio, from reproduce amplifier CH2
23	A-DRVS-2	Cabel screen
24	A-DRVA-2	Audio, to the output amplifier CH2
25	A-DRVB-2	Audio, to the output amplifier CH2

Insert AUX

Standard option: Stereo monitor panel

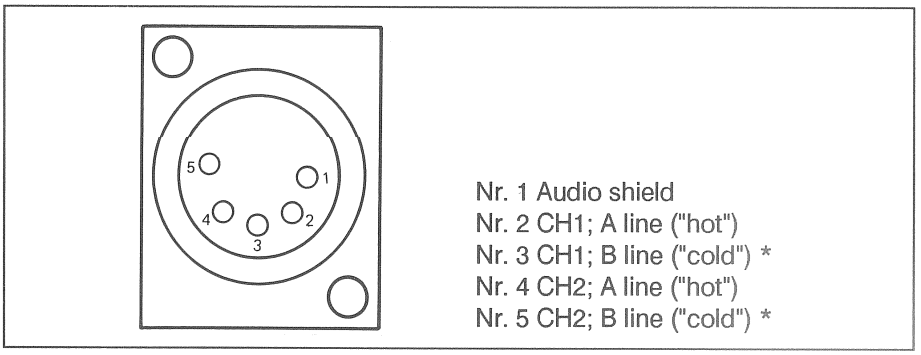

Fig. 2.3.9

The balanced AUX INPUT on tape recorders with a stereo monitor panel is terminated on a 5-pin XLR connector

* For unbalanced wiring, conductors 5 and 3 are to be interconnected with conductor audio 0Volt.

Timecode in- output

1/4" and 4-channel TC-versions

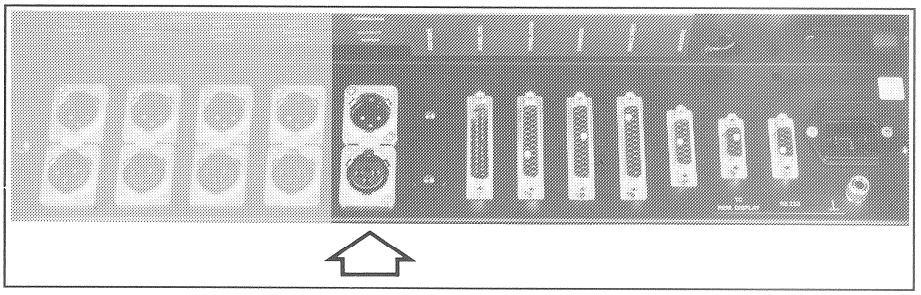

Fig. 2.3.10

No. 1 = Audio shield
No. 2 = A line ("hot")
No. 3 = B line ("cold")*

* By unbalanced operation the wiring "B" is necesary to change on 0Volt socket.

2.3.4 Headphones socket

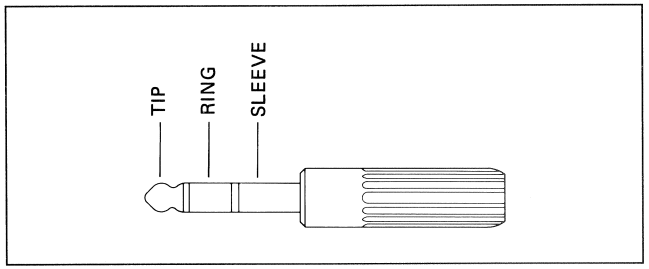

Fig. 2.3.11

TIP	=	Left-hand channel
RING	=	Right-hand channel
SLEEVE	=	Shield

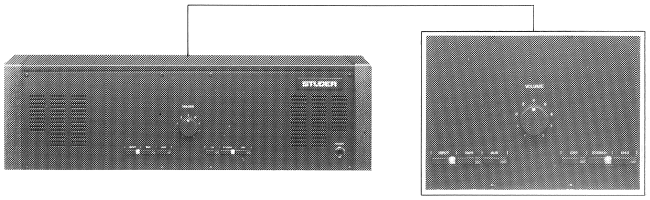

Fig. 2.4.8 see 2/29

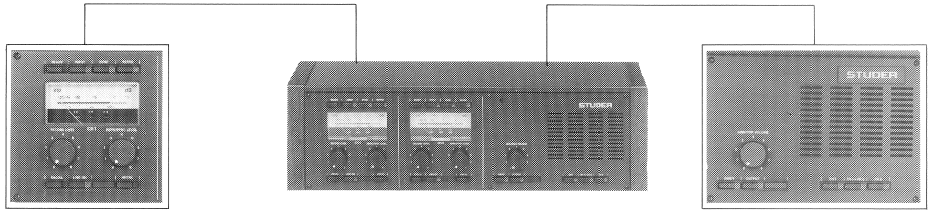

Fig. 2.4.4 see 2/23

Fig. 2.4.7 see 2/29

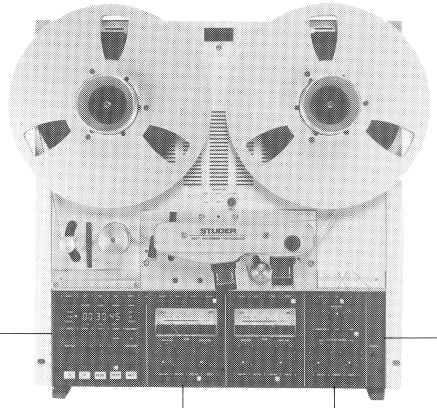

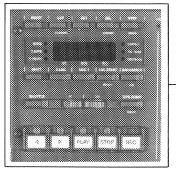

Fig. 2.4.2 see 2/17

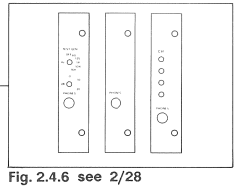

Fig. 2.4.6 see 2/28

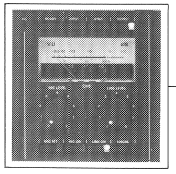

Fig. 2.4.3 see 2/23

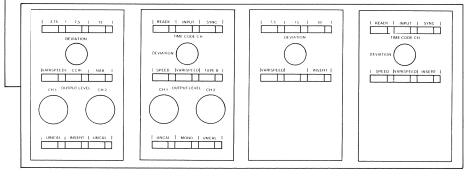

Fig. 2.4.5 see 2/25

2.4. Operating instructions

2.4.1 Controls

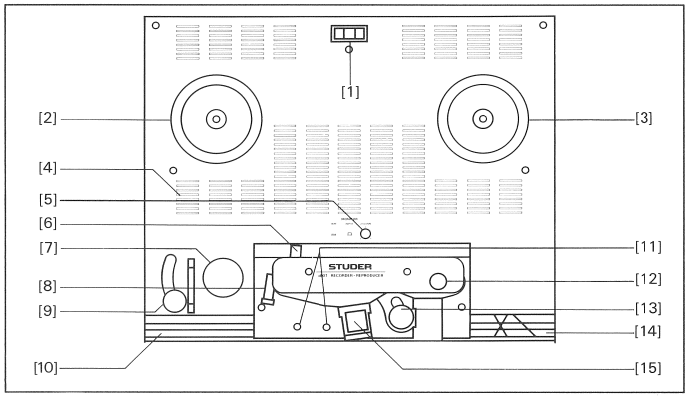

Fig. 2.4.1 Decription 1-15

[1] Power switch — Power switch, switches the tape recorder on and off.

[2] Left-hand spindle — Left hand reel support, supply motor.

[3] Right-hand spindle — Right-hand reel support, take-up motor.

[4] Monitor speaker — (Only in versions without instrument panel).

[5] VOLUME — Volume control for the monitor speaker [4]. When this button is pressed, the tape signal is reproduced, when the button is pulled, the input signal is reproduced.

[6] Tape lift slide — For soft click-free fade-in/fade-out of a recording. (Lifts the tape off the erase head).

[7] Tacho roller — Tape move sensor: Supplies the pulses for the tape counter and signals the tape move status to the electronics.

[8] Light barrier — For detecting the transparent leader or a torn tape. Also stops the tape timer.

[9] Tape sensor lever — Monitors the tape tension.

[10] Splicing block — Only for 1/4" versions

[11] Scissors — Only for 1/4" versions

[13] Pinch roller — Presses the tape against the capstan shaft. In spooling mode, cueing of the tape is possible by pressing the pinch roller toward the capstan shaft. The closer the tape is moved to the capstan shaft, the louder the signal. The pinch roller cannot be pressed completely against the capstan.

[14] Cutting block — For cutting the tape (Only for 1/4" versions.

[15] Head shield — In front of the reproduce head(s). Can be opened and closed by hand.

EDITION:OKTOBER 1991

Left control field [16 - 35]

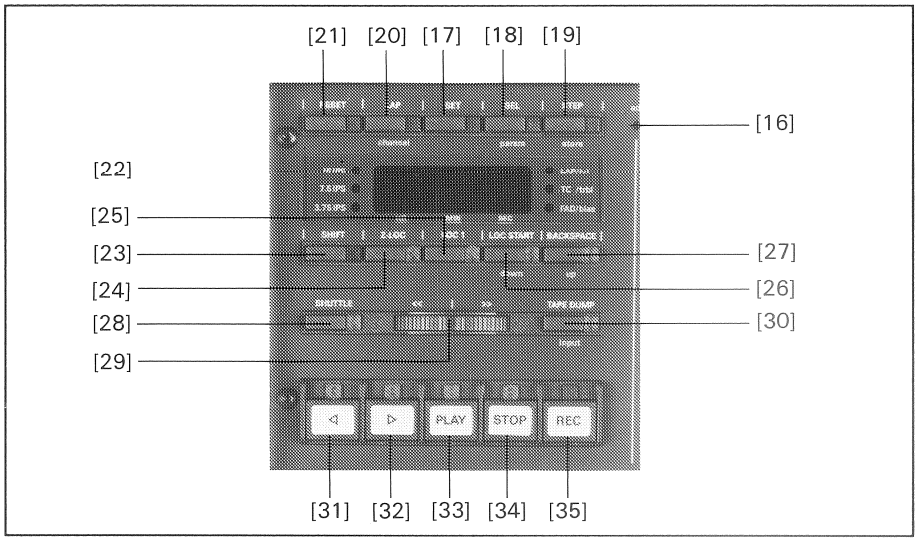

Fig. 2.4.2 This control field is identical in all versions. [16-35]

[16] "adj":

Microswitch, switches the tape recorder to alignment mode for programming the audio parameters or, when pressed together with the SHIFT [23] key, switches to the soft jumper program (refer to sections 2.5.3 and 2.5.4).
Use a pencil or an other pointed tool to operate the microswitch "adj.". Press the microswitch again to return to the normal operating status. When "adj." has been activated, some of the operating keys change their function; the designations printed in yellow will become valid.

	Normal key function:	Key function in "adj." mode:	Key funktion in "SHIFT + adj." mode:
[17] SET	Setup key for entering a LOC address. (SET ADDRESS) or for entering a new tape timer value (SET TIMER). The current counter reading is blocked at the moment the key is pressed (first digit flashes) and can be read into a LOC memory either directly or after it has been modified with the SEL and STEP keys. To store the new counter reading, simultaneously press the SHIFT [23] key and SET [17]. The LOCATOR addresses are also updated by the amount of the change.		
[18] SEL	Digit selection key. After SET [17] has been pressed you can select the digit(s) to be modified. The selected digit flashes. **Note:** Reset sets all digits to zero. The tape timer content is not changed.	**(param)** This key causes the next parameter (param) to be addressed in the menu.	

	Normal key function:	Key function in "adj." mode:	Key funktion in "SHIFT + adj." mode:
[19] STEP	Step key. Increments the digit selected with the SEL [18] in SET mode. Smaller values can be set by incrementing past the digit 9 (5).	**store** stores the audio parameter (e. g. after an adjustment).	**store** stores the choosen condition of the selected soft jumper function.
[20] LAP	Second separat counter for measuring a specific tape segment without influence the original counter position. The tape timer can be set to zero (RESET [21] key) as desired. When the LAP function is active, the red LAP LED on the right-hand side of the display window [22] is light.	**channel** selects an audio channel for adjustment: A 1 = channel 1 A 2 = channel 2	**channel (Function)** Selection of a soft jumper. The first two digits indicate the selected soft jumper. The next digit(s) indicate the status of the selected function and are advanced with each depression of the channel key. For paging backward to the preceding digit, simultaneously press the SHIFT [23] and channel keys.
[21] RESET	Reset key, sets the tape timer or the LAP counter to zero (00.00.00). The LOCATE addresses always relate to the actual tape address. They are automatically converted when the counter is reset so that always the same tape address is searched.		
[22] DISPLAY	Real-time tape counter with indication of the actual playing time for all tape speeds, in hours, minutes, and seconds. Can be changed over for displaying a second timer (LAP [20] key) for relative time measurement with operator selectable reference.	Displays the selected audio parameters (decimal). (For detailed information refer to the Section Audio 4.2.6).	Displays the selected soft jumper and the corresponding function. (For detailed information refer to the Section Soft jumper programming, 2.5.2.)
	Indicator LED for: ■ Selected tape speed ■ **LAP** = Second timer ■ **TC** = Timecode (Only for TC versions) ■ **FAD** = FADER READY	**LED's indicate the following audio parameters:** **lvl** = level adjustment active **trbl** = treble adjustment active **bias** = bias adjustment active. (Not possible in repro and sync operation).	
	Flashing dots between digits: ■ A locator address is displayed	**Flashing dot between channel and parameter indication:** The display value of the corresponding audio parameter is not stored.	**A flashing decimal point between Softjumper status indication:** Indicates that the softjumper status (or value) has not yet been stored.

	Normal key function:	Key function in "adj." mode:	Key function in "SHIFT+adj." mode:
[23] SHIFT	Setup key for alternative functions (playback in opposite tape direction, library wind, soft jumper program, backward paging in the soft jumper program, storing the new counter reading) and functions which for safety reasons can only be activated by pressing two keys (tape type or equalization standard, varispeed, tape speed, mono/insert, ready/safe switch for time code, fader ready for recording and tape dump for inverted dump edit mode. If you press the SHIFT key followed by a locator key, the stored address will be displayed for approx. 4 seconds.		
[24] Z-LOC	Zero locator. Positions the tape at the tape address 00.00.00. When this key is pressed in LAP mode [20], the LAP function is switched off and the tape is positioned at the actual zero address of the main timer. The repro-duce mode as well as the record mode can be preselected while the tape is positioning. The LEDs of the prese-lected functions flash.		
[25] LOC 1	Address locator 1. Positions the tape at the address stored with the key combination SET [17] and LOC 1 [25]. The reproduce mode as well as the record mode can be preselected while the tape is positioning; the LEDs of the preselected functions flash. The locator address is displayed for as long as this key is held down, and the two decimal points flash. If this key is pressed in LAP mode [20], the LAP function is switched off and the tape is positioned at the actual LOC 1 address of the main timer. The stored address always relates to the actual tape address i.e. when the tape timer is set to zero with RESET [21], the locator address is automatically converted. When the key combination first SHIFT [23] and after release then LOC 1 [25] is pressed, the stored locator address is displayed briefly without causing the tape to be positioned at the displayed address.		

	Normal key function:	Key function in "adj." mode:	Key function in "SHIFT+adj." mode:
[26] [27]	**Softkey** The keys [26 and 27] can be assigned to different functions by means of the soft jumpers 9 and 10.		
[26]	**LOC-START** (Soft jumper position 1 = standard programming). Positions the tape automatically to the address at which the last PLAY or record command was entered (and the tape was standing still). During the positioning process, play or record can be preselected; the corresponding LED above the preselected function key flashes.	**down** Decrements the value of the active alignment parameter (lvl, trbl, bias) selected with the (param) [18] key of the respective channel choosen by key channel [20].	**down** Decrements the value of the selected key (channel) [20] or switches off the corresponding function.
[27]	**BACKSPACE** (Soft jumper position 4 = standard programming). While this key is held down the tape is rewound at approximately 4 times the play speed but the tape is not lifted off the soundhead. PLAY is automatically activated when this key is released. **LOOP** (Soft jumper 0). In this programming mode, pressing of this key causes a play loop to be performed between the tape address 00.00.00 and the address stored in LOC1. The loop always starts at the lower of the two tape addresses. **LOC2/LOC3** (Soft jumper position 2/3). In this programming mode a second address locator (analog) LOC1 is available. When the keys SHIFT [23] and (LOC2/LOC3) [26/27] are pressed, the stored address is briefly displayed without changing it.	**up** Increments the value of the active alignment parameter (lvl, trbl, bias) selected with the (param) [18] key of the respective channel choosen by key [20].	**up** Increments the value of the softjumper status selected by key [20] or switches on the corresponding function.

	Normal key function:	Key function in "adj." mode:	Key function in "SHIFT+adj." mode:
	FADER READY (Softjumper position 9). In the FADER READY setting the key can be used to enable the fader start. This function is acknowledged by the red FAD LED in the display window [22]. If at least one channel is switched to READY [36/62], the machine can be enabled for recording by simultaneously pressing SHIFT [23] and FADER READY [26 or 27] (the yellow LED next to the FADER READY key flashes). When the fader potentiometer is opened, the machine starts immediately in record mode. **LIFTER** (Soft jumper position 6/7) Cancels the tape lifting in spooling mode. This key can be programmed as a momentary push button (position 6) or as an ON/OFF key (position 7). **REHEARSE** (Softjumper position 8). Simulation of electronic cutting without record function.		
[28] SHUTTLE	Editing mode, the tape tension control is enabled and the audio reproduce channels are open. The tape can be moved forward or backward to the desired position by manually turning the right-hand reel [3]. When the SHUTTLE key [28] is pressed a second time, the editing mode is cancelled.		
[29] SHUTTLE CONTROL	Rotary wheel for motor-assisted editing mode with activated SHUTTLE function [28].		
[30] TAPE DUMP	Switches the "waste basket mode" on and off. The right-hand spooling motor is disabled. Mode A or B can be selected by changing over the programming switch (jumper JP8) below the cover.	**input** In models without output selector, the input signal is connected directly to the output for setting the internal audio level.	

Normal key function:	Key function in "adj." mode:	Key function in "SHIFT+adj." mode:
Mode A: The TAPE DUMP [30] key functions as a preselector switch. The "waste basket" mode is activated with the PLAY [33] key. The tape is played but not wound up. The loose tape can be rewound on the left-hand spindle [2] by pressing the < [31] key. In this mode it is possible to play a loose piece of tape without winding the tape onto the reel (described in Section 2.4.25). **Mode B:** The "waste basket" mode is activated directly with the TAPE DUMP [30] key. The machine stops when this key is pressed a second time. When the SHIFT [23] and tape dump [30] keys are pressed simultaneously, the LED next to the tape dump key starts to flash. The effect will be that the left-hand motor stops and the slack tape is wound on the right-hand reel (also refer to Section 2.4.25).		

[31] < Key for rewinding of the tape at high speed. The tape is wound on the left-hand reel. Rewinding at reduced speed (library wind) is possible by simultaneously pressing SHIFT [23] and < [31].

[32] > Key for spooling the tape forward at high speed. The tape is wound on the right-hand reel. Spooling forward at reduced speed is possible by simultaneously pressing SHIFT [23] and > [32].

[33] PLAY Key for reproducing the tape. This key is pressed together with the REC [35] key for activating the recording mode. REVERSE PLAY is activated by pressing SHIFT [23] and PLAY simultaneously.
If no tape is inserted (tape tension sensor in idle position, light barrier not covered), the capstan motor can be switched on with the PLAY key for cleaning the capstan shaft.

[34] STOP This key cancels al tape transport functions and all selected operating modes except the preselection of the TAPE DUMP [30] mode A.

[35] REC Record key. Depending on the programming it may only be effective in conjunction with the PLAY [33] key. Recordings can only be made on the enabled channel(s) (READY [36/62]). If no channel is switched to READY, the record command will be ignored. Mode A or B can be selected by changing over the programming switch (jumper 11) below the cover.

Mode A: Both keys, PLAY [33] and REC [35] must be pressed for activating the record mode. (Jumper in pos. 0).

Mode B: To switch from reproduce to record mode, only the REC [35] key needs to be pressed; but for activating the record function from STOP mode, the PLAY [33] and the REC [35] key have to be pressed. (Jumper 11 in pos. 1).

Internal VU meter panel

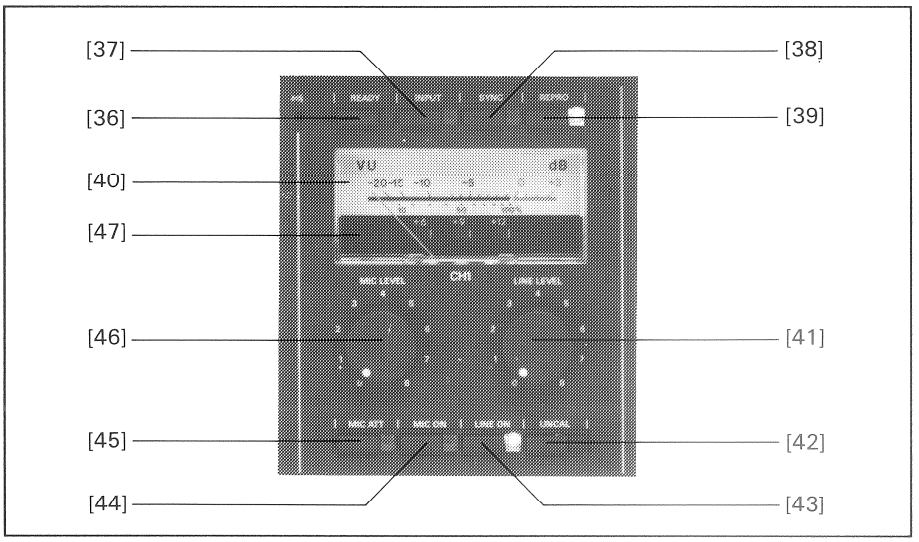

Fig. 2.4.3

In the VU versions, the control panel exists:
- 1 x in MONO units
- 2 x in STEREO units

On STEREO (2-channel) units the left-hand operator panel controls the left-hand channel 1 (**CH1**), the right-hand operator panel controls the right-hand channel 2 (**CH2**).

Important: ONLY units with built-in VU meters are equipped with a balanced phantom-supplied microphone input!

External VU meter panel

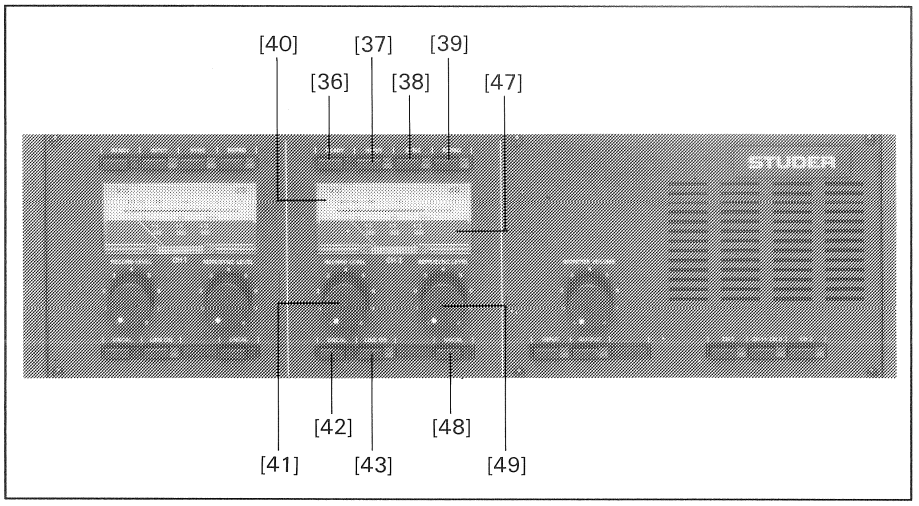

Fig. 2.4.4

In VUK versions, this control panel exists:
- 1 x in MONO units
- 2 x in STEREO units
- 4 x in 4-channel units

On STEREO (2-channel) units the left-hand operator panel controls the left-hand channel 1 (**CH1**), the right-hand operator panel controls the right-hand channel 2 (**CH2**).
On 4-channel units the channels (**CH1 ... CH4**) are arranged from left to right.

[36] READY — Enables the channel for standby recording. The red LED next to the key flashes. While a recording is in progresss, this LED is continuously lit up.

[37] INPUT — switcht the input signal to LINE OUT (premonotoring). The level of the input signal is indicated on the VU-meter [40]. This signal can also be heard via the XLR output, the monitor speaker [4], and the headphone connector [61].

[38] SYNC — The audio signal is reproduced from the record head with limited frequency response. Synchronous recording of channel 2 to an existing recording on channel 1 (and vice versa) is possible. The VU-meter [40] indicates the level of the SYNC reproduce signal. The SYNC signal can also be heard via the monitor speaker [4], and the headphone connector [61].

[39] REPRO — Output selector of the respective channel. The audio signal is reproduced from the reproduce head. The VU-meter [40] indicates the level of the reproduce signal. The REPRO signal can also be monitored via the speaker [4], and the headphone connector [61]. This function can also be activated while a recording is in progress in order to continuously monitor the quality of the recording (tape/source monitoring).

[40] VU-METER — Output meter for the respective channel with three peak indicator LEDs for +6, +9, and +12 dB relative to 0 VU.

[41] LINE LEVEL RECORD LEVEL — Input level potentiometer for the LINE INPUT. Only enabled when the UNCAL [42] key has been switch over to uncalibrated record mode.

[42] UNCAL — Activates the uncalibrated record mode for the respective channel. The record level can be adjusted with the LINE LEVEL [48] potentiometer.

[43] LINE ON — Switches the LINE INPUT of the respective channel on and off. When the microphone input is simultaneously activated with the MIC ON [44] key, the two signals will be mixed.

[44] MIC ON — Switches the microphone input of the respective channel on and off. When the line input is simultaneously activated with the LINE ON [43] key, the two signals will be mixed.

[45] MIC ATT — Microphone attenuator for the respective channel. The input signal on the MIC INPUT socket is attenuated by approx. 28 dB.

[46] MIC LEVEL — Input volume potentiometer for the respective channel for adjusting the sensitivity of the microphone input. The potentiometer is aktiv also in not pushing key function.

[47] PEAK-LED's

The 3 LEDs +6, +9 and +12 dB are peak LEDs that warn against oversaturation of the tape. In the standard setting the peak values +6, +9 and +12 dB above 0 VU are indicated.

[48] REPRO-/SYNC-LEVEL

REPR/SYNC LEVEL. Output level potentiometer for the LINE OUTPUT. The signal to be controlled is selected by the keys INPUT [37]; SYNC [38] or REPRO [39]. Only enabled when the UNCAL [49] key has been changed over to uncalibrated reproduce mode.

[49] UNCAL

Activates the selected channel by the uncalibrated reproduce mode. The output level can be adjusted with the REPRO/SYNC LEVEL [48] potentiometer.

Right control field 1

(standard 1/4" version)

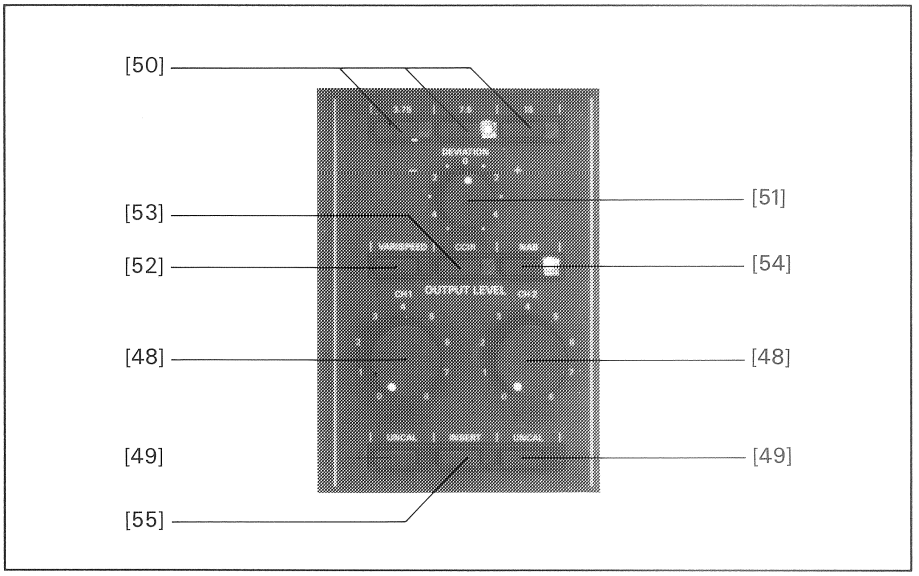

Pull-out page Fig. 2.4.4

[50] **15, 7,5, 3,75**
30, 15, 7,5

Speed selection keys for selecting the desired nominal tape speed in inches per second. To prevent inadvertent changeover, soft jumper 07 can be set in such a way (see programming instructions below) that a changeover is only possible together with the SHIFT [23] key. (First hold down the SHIFT key and then also press the speed selection key).

[51] DEVIATION

Potentiometer for continuously varying the tape speed in "varispeed" mode (VARISPEED [52] key) within the range of ±7 semitones (-35%, +54%) relative to the selected nominal speed. At 3.75 ips the range is: +7, -1.5 semitones.

[52] VARISPEED

Activates the varispeed mode. In this mode the tape speed can be varied with the DEVIATION [51] potentiometer. To prevent unintentional activation, this key is only effective when pressed in conjunction with SHIFT [23] (press and hold SHIFT and also press the VARISPEED key).

Standard **2 - CHANNEL VERSIONS** Timecode

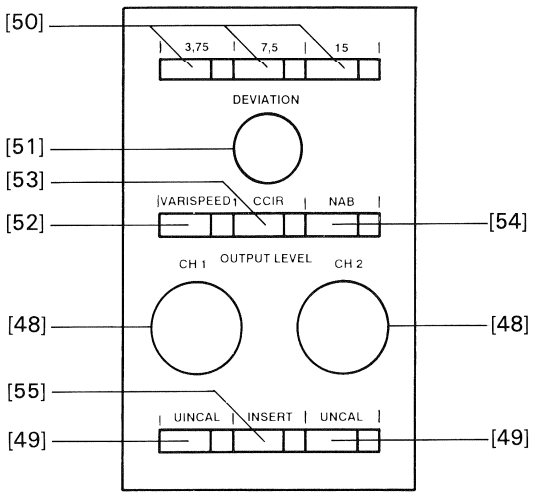

Standard 2-channel VU-panel

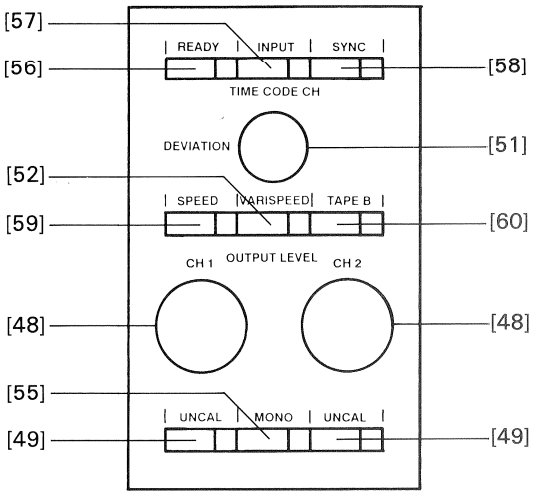

2-channel VU-TC panel

Standard **4 - CHANNEL VERSIONS** Timecode

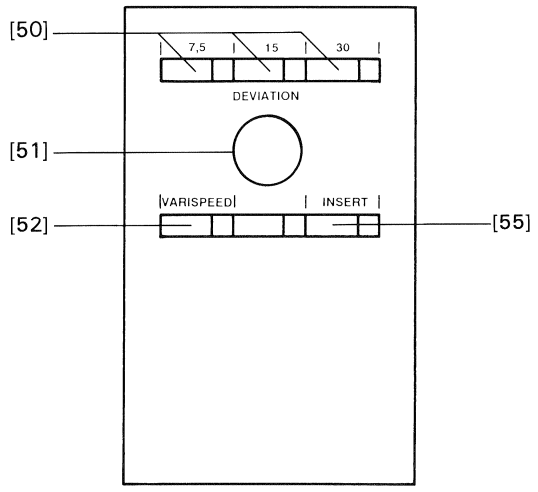

4-Channel VUK-panel

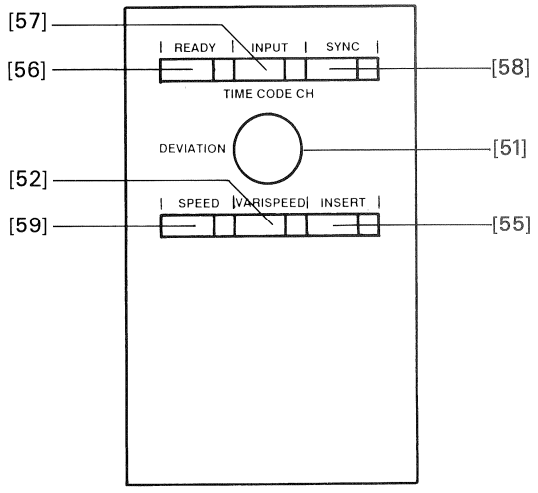

4-Channel VUK-TC panel

- The right-hand operator panel contains the speed selector, tape type or equalization selector, and a key for activating the MONO or INSERT mode. These two last functions are available as OPTIONS.
- VU versions with built-in VU-meters are additionally equipped with the output level potentiometers [48] and the corresponding enable key (UNCAL [49]).
- TC versions are equipped with the time code selection keys [56-58].
- 1/2" machines are only available in the HS (High Speed) version and with only one equalization standard (either CCIR or NAB). The speed selection keys [50] are correspondingly labelled.

[53] Audio softkeys
[54]

They can be programmed (by means of softjumper 13) to switch between two different tape characteristics:

CCIR/NAB
Selected switch between equilization CCIR/NAB.
or to switch between the CCIR and NAB standards:

TAPE A/TAPE B
or two different head sets:

HEAD A/HEAD B
- HEAD A = main reproduce head
- HEAD B = 2. reproduce head

The method of programming is described in section 2.5.2
To prevent unintentional activation, this changeover can only be enabled by simultaneously pressing the SHIFT key [23] (press and hold SHIFT key and also press the [53] or [54] key.

[55] MONO/INSERT

This key activates the internal audio insert point.
- On stereo units the OPTIONAL mono/stereo selector switch can be installed with or without test generator. In this case the key [55] is labelled as MONO.
- With the option 20.807.950.00 it is possible to insert an external balanced circuit (e.g. noise reduction system) into the audio input and/or output path. In this case the key [55] is labelled as INSERT (see Fig. 2.3.1, item 11).

To prevent unintentional activation, this changeover can only be enabled by simultaneously pressing the SHIFT key [23] (press and hold SHIFT key and also press the MONO/INSERT key.
If the insert point is unused, this key is disabled by means of jumper JP48 (JP46 for 1/2" versions) located below the cover.

Control field TC-versions

See Page E2/25 "2-channel versions"

[56] READY

Enables the timecode channel for recording. The red LED next to the key flashes. While a recording is in progress, this LED is continuously lit up.
On/off selection of READY function is only enabled when pressed SHIFT [23] and READY [56] simultaneous.

[57] INPUT

Output selection of the time code channel. The time code input signal is connected directly to the time code output.
Select the INPUT function by pressing the SYNC [58] key. The function selected last (SYNC or REPRO) with the will be activated.

[58] SYNC/REPRO

Output selection of the time code channel. The time code signal is reproduced via the time code combination head.
- If the yellow LED to the right of the key is dark, the output selection is set to **REPRO**. This means that the Timecode signal coincides with the audio signal on the audio reproduce head.
- If the yellow LED is light, the output selection is set to SYNC. This means that the time code signal coincides with the audio signal on the audio reproduce head.
- During a time code recording the TC input signal is automatically applied to the TC output, regardless of the switch setting.

[59] SPEED

This key works as a wraparound function. The desired tape speed can be selected by repeatedly pressing this key. The selected speed is displayed by the LEDs on the left of the display [22].
To prevent unintentional activation of this function, soft jumper 07 (see programming, Section 2.5.2) can be set in such a way that the changeover can only be effected in conjunction with the SHIFT [23] key. Hold down the SHIFT [23] key and also press the SPEED [59] key.

[60] Audio Softkeys

Programmable key for the following functions:

Tape B Changeover to the calibration data of a second tape type with corresponding equalization standard.
- LED on the right of the key is dark = tape type A selected (TAPE A)

NAB Changeover to the other equalization standard of soft jumper 13
- LED on the right of the key is dark = CCIR standard selected
- LED on the right of the key is light = NAB standard selected

HEAD B Changeover to the 2nd reproduce head
- LED on the right of the key is dark = reproduce head A (main head) is selected.
- LED on the right of the key is light = reproduce head B (auxiliary head) is selected.

These functions can be programmed (with soft jumper 13). The programming method is described in Section 2.5.2.
To prevent unintentional activation, the changeover is only possible in conjunction with the SHIFT [23] key. (Press and hold the shift key, then press key [60]).

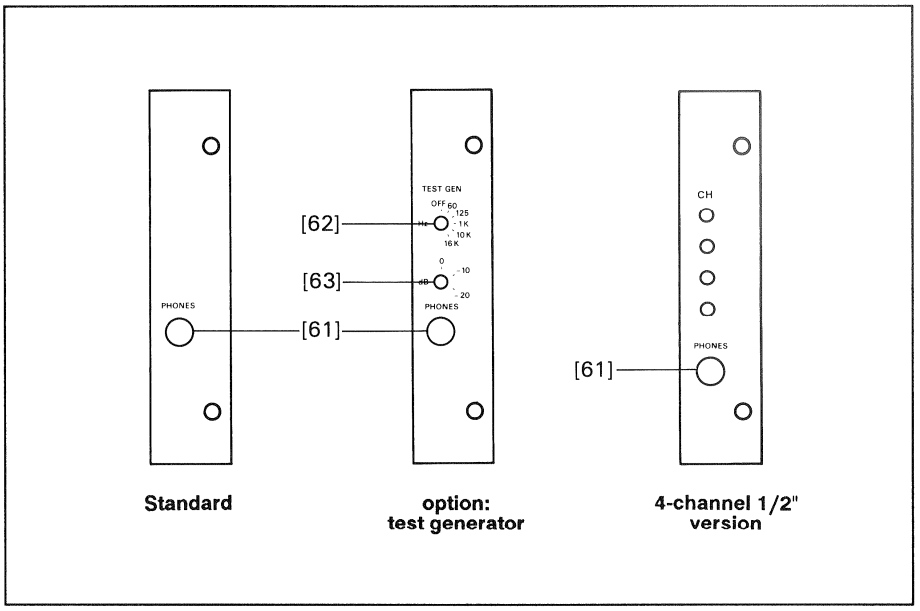

Fig. 2.4.6

[61] PHONES

Headphone socket. The built-in monitor speaker is automatically switched off when the headphones jack is inserted. The Tape/source reproduce level of the headphones can be adjusted with the VOLUME [5] potentiometer.

[62] Hz

Test generator (only on models with the optional TEST GENERATOR). Depending on the switch setting a sine signal (0 VU) with a frequency of 60 Hz, 125 Hz, 1 kHz, 10 kHz or 16 kHz is fed instead of the input signal. In the OFF position the test generator is disabled. To prevent mixing of the test generator signals with the inputs, the functions MIC ON [44] and LINE ON [43] should be switched off.

[63] dB

Booster amplifier (only in units with the option: TEST GENERATOR). Depending on the switch setting the test signal is attenuated by -10 or -20 dB and the output signal boosted by +10 or +20 dB.

[64] CH1...CH4

Monitor selection key (see pull-out page Fig. 2.4.5/3).

The selected and engaged keys connect the corresponding output signal(s) to the monitor and headphones amplifier.

Monitor-units in external VU-meter panel

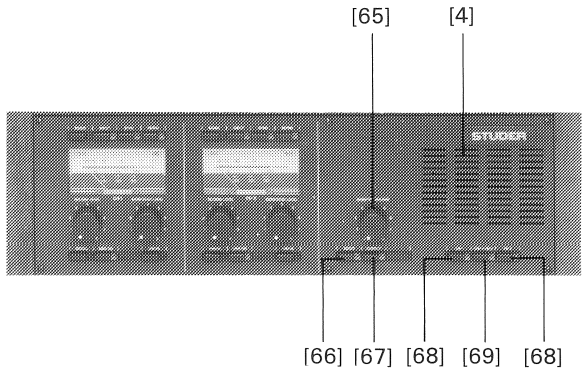

Standard monitor for externes VU-Panel

Fig. 2.4.7

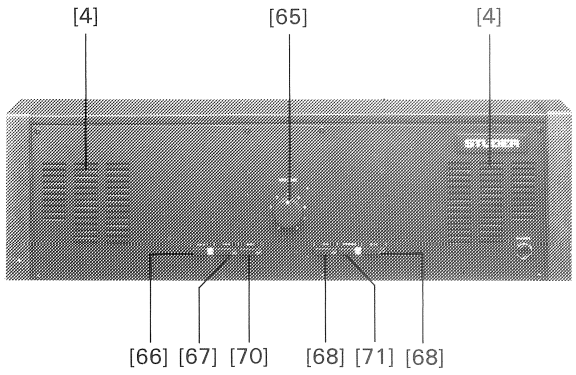

Monitor-unit for stereo monitor panel

Fig. 2.4.8

[65] MONITOR VOLUME

Volume control of the monitor amplifier. It influences the monitor volume of the input signals selected with the key [66] or [67].

The volume of the headphones socket PHONES [61] can also be adjusted. The monitor speaker is switched off when the headphones are plugged in.

[66] INPUT

Signal selector of the monitor speaker. When you press the INPUT [66] key, the signal available on the input is connected to the monitor speaker (source monitoring).
If the output selector of the VU-meter unit is set to INPUT [37], the monitor always reproduces the input signal in the INPUT [67] or OUTPUT-TAPE [67] settings.

[67] OUTPUT TAPE

Signal selector of the monitor speaker. When you press the OUTPUT [67] key, the reproduce or SYNC signal from tape is heard through monitor speaker. Depends on the setting of the output selector [37, 38] of the VU-meter unit.
If the output selector is set to INPUT [37], the input signal is reproduced by the monitor in the OUTPUT-TAPE [67] setting.

[68] CH1 + CH2

Signal selector of the monitor speaker. When you press the OUTPUT key [67], the input signal of the corresponding channel is connected to the monitor speaker. The signal to be monitored is determined with the keys INPUT [66] (source monitoring), OUTPUT TAPE [67], or AUX [70] (auxiliary input).

On the instrument panel stereo monitor the input signal is connected to both speakers in accordance with the channel selection [68].

[69] CH1 + CH2

Selector switch for the monitor
When CH1 + CH2 [69] is pressed, the signals of both channels are added and reproduced in mono mode.

[70] **Stereo-auxiliary input**

With the AUX [70] key you can monitor the signal connected to the AUX input via the monitor speaker or the headphones (PHONES) socket. This signal has no further connection to the unit. The AUX input is strictly a monitoring channel.

[71] **STEREO**

Both channels are reproduced in stereo mode via the built-in monitor speaker and the PHONE [61] socket when the STEREO [71] key is pressed on the instrument panel stereo monitor.

2.4.2 Power switch [1]

Caution:

Before you connect the tape recorder to the AC outlet, check that the setting of line voltage selector agrees with the local mains voltage. The fuse rating must be checked whenever the setting of the line voltage selector has been changed (Section 2.3.1). The power switch [1] is located at the top edge of the tape deck cover.
When the tape recorder is switched on, the operating state that existed when the machine was switched off is automatically reestablished and displayed. The software release date (WW.YY = week. year) is shown on the display [22] for a few seconds. The last timer reading is subsequently displayed.

Exception:

Tape transport functions that were active when the machine was switched off are not restarted, and the channels that were set to READY and the varispeed mode are disabled. The tape recorder is always switched to STOP [34]. When a tape is inserted, the yellow LED of the STOP key is continuously light. If there is no tape or if the tape is slack, the LED flashes for approx. 10 seconds and then switches off.

2.4.3 Indications at power on time

After the machine has been switched on, the VU-meters [40] are illuminated and the software date is shown on the display [22].

The following indications are also possible. They signal the current operating state of the tape recorder:

- Display: The last tape address is indicated.
- Locator addresses are saved.
- STOP: The stop function is active. If the LED flashes for approx. 10 s and then switches off, there is no tape inserted or the inserted tape is slack.
- CCIR (TAPE A/REPRO HEAD LEFT) or NAB (TAPE B/REPRO HEAD RIGHT): the selected equalization standard (tape type/reproduce head) is indicated.
- 3.75 7.5 15 or 30: The selected tape speed is indicated next to the display [22] and on the speed selector keys [50].
- Input selector: The selected input is indicated with MIC ATT [45], MIC ON [44], LINE ON [43] or UNCAL [42].
- Output selector: The selected output is indicated with INPUT [37/52], SYNC [38/58], or REPRO [39/58].
- Output level: Uncalibrated output level is indicated by the red LED next to the UNCAL [49] keys.
- MONO/INSERT [57] is indicated if a corresponding option is installed and if it was selected before the machine was switched off.

On models equipped with an VU meter panel the channel selection for the monitor output is also indicated.

2.4.4 Inserting the tape

Adapter for 3-pronged (CINE) reels for DIN AEG hubs and NAB reel adapters are engaged in the spindles.

Three-pronged reel (DIN 45514, 45517)

Mount the full reel on the left-hand spindle, the empty reel on the right-hand spindle. Pull out the three-pronged guide and lock the adapter with a 60° turn.

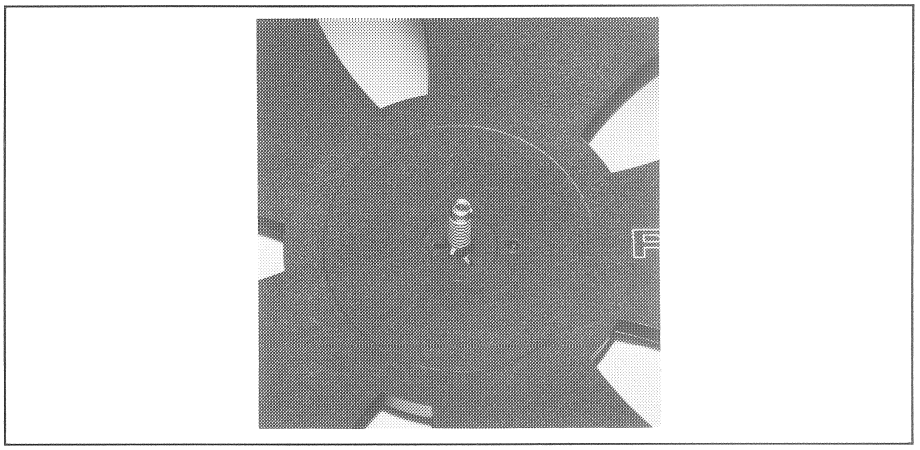

Fig. 2.4.9

DIN adapter and Self-supporting pancake (DIN 45515)

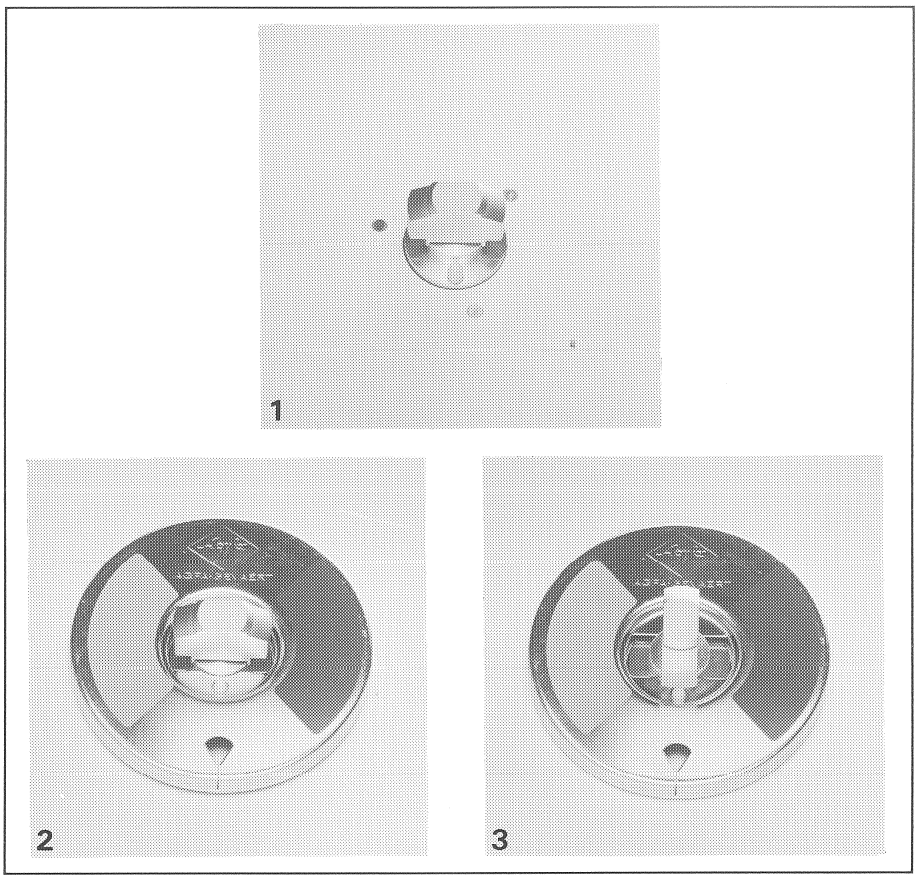

Fig. 2.4.10 1 DIN AEG platter
2 Center of pancake, unlocked
3 Center of pancake, locked

Install the DIN adapter

Mount the spindle on the adapter and engage the driving pin of the reel flange in the holes of the spindle.
Mount the full pancake on the left-hand side. Lift the clip and twist it by 60° until it rests on the guide pins. Mount an empty reel flange and an empty hub on the right-hand side.

NAB reel

Mount the NAB adapters on the two spindles [2/3] and lock them by pulling out the three-pronged guides and giving a 60° turn.

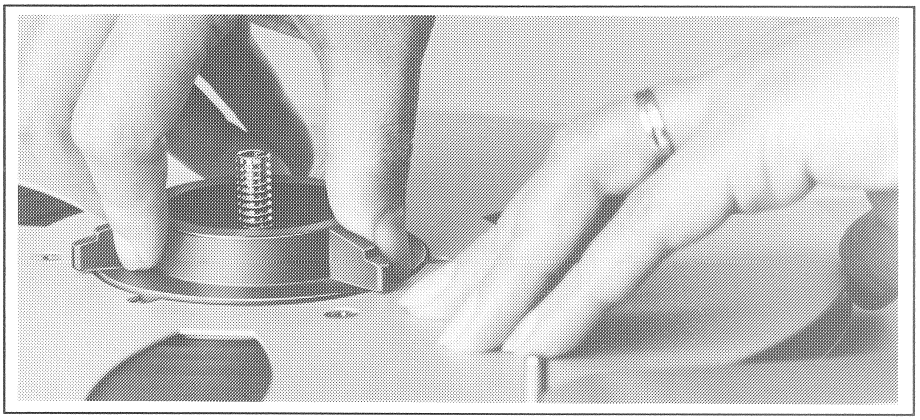

Fig. 2.4.11

Threading the tape

Thread the tape as illustrated. It must be threaded exactly around the tape tension sensor [9], the tacho roller [7], through the light barrier [8], and over the soundheads. Pull the leading end of the tape over the pinch roller [13] (the pinch roller can be moved to the idle position by actuating the tape lifter [6]), and around the right-hand guide roller. Thread the tape on the right-hand reel and secure the tape by giving the right-hand reel a few counterclockwise turns.

If the tape starts with a transparent leader, spool forward by pressing the > [32] key until the oxide coating has passed the light barrier [8]. Set the tape timer [22] to zero by pressing the RESET [21] key. If the tape is always set to zero at the same address, the magnetic tape can be repetitively positioned at any address by means of the real-time tape counter [22]. If necessary, raise the head shield [15] in front of the reproduce head(s).

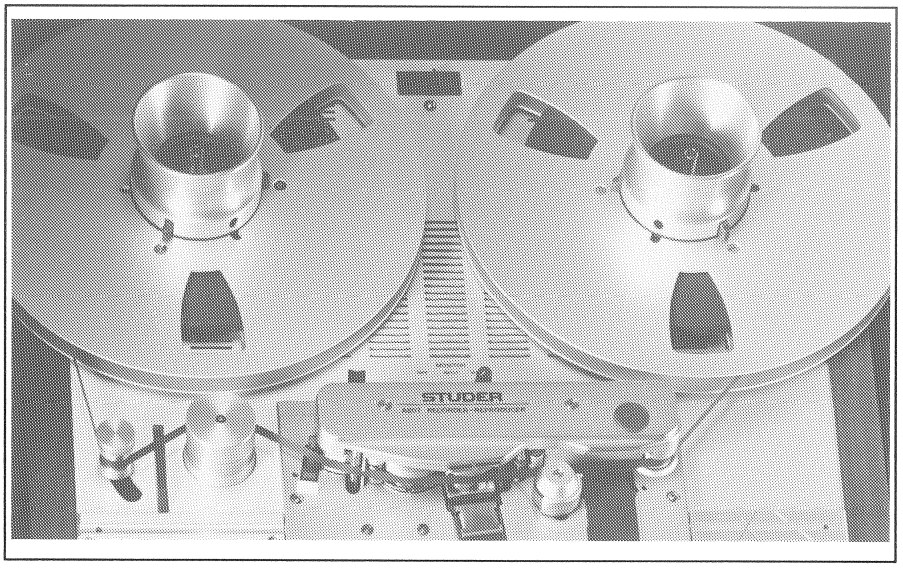

Fig. 2.4.12

2.4.5 Tape speed [50]

Three tape speeds are available. Depending on the model, three out of the following four speeds can be selected: 3.75/7.5/15/30 ips. The speed is selected:

- either by pressing the key [50]. The LED in the key lights up. If correspondingly programmed (soft jumper 07) it may be necessary to hold down the SHIFT [23] key while selecting the speed.
- or by repeatedly operating key [59]. The selected speed is indicated in the display [22] in the left control field generell. Also in this case interlocking with the SHIFT key can be programmed.

2.4.6 Play mode [33]

When the local PLAY key [33], a corresponding remote control button, or a fader start device is actuated (possibly via the FADER READY key), the tape recorder switches to play mode. The yellow LED above the PLAY key lights up.

The play mode can be cancelled by pressing the STOP [34] key or any other tape command key . If the PLAY key is pressed while a recording is in progress (REC), the machine switches to play without interruption and the record mode is cancelled. If the PLAY key is pressed in spooling mode, the magnetic tape is immediately decelerated and the play function is preselected. As soon as the magnetic tape has come to a standstill or achieved the nominal speed in the play direction, the machine switches to play mode.

Any tape transport function can be selected independently of the current operating state of the machine. The microprocessor checks automatically the validity of the command and protects the tape by first decelerating it before the opposite sense of rotation or a slower speed is activated. A SHUTTLE or locator function can also be selected directly.

cleaning the capstan motor

When no tape is mounted (tape tension sensor in idle position, light barrier not covered), you can switch on the capstan motor for cleaning the shaft by pressing the PLAY [33] key. The motor rotates for as long as the key is pressed.

2.4.7 Reverse play mode

By simultaneously pressing the SHIFT [23] and PLAY [33] keys, the tape recorder can be switched to REVERSE PLAY for searching a tape location or for achieving special effects. Any tape transport command, including the SHUTTLE and the locator function can be selected directly from reverse play mode.

2.4.8 Varispeed control [52]

In reproduce as well as play mode, the variable tape speed can be selected by simultaneously pressing the two keys SHIFT [23] and VARISPEED [52]; the red LED next to the VARISPEED key flashes. The deviation from the nominal tape speed can be selected with the DEVIATION [51] potentiometer within the range of ±7 semitones (+7 to -1.5 semitones at 3.75 ips). The tape speed can also be altered by means of an external varispeed control (option). When the external varispeed control is activated, the internal control frequency is automatically disabled.

Notes:

The delay time for the drop-in and drop-out is matched to the corresponding nominal speed; theses delays are not adjusted in varispeed mode! The indication of the tape timer no longer corresponds to the true elapsed time but rather to the playing time at nominal speed.

2.4.9 Record mode REC [35]

The information in this Section do **not** apply to "playback only" models (PBO)!

When the REC [35] and the PLAY [33] keys are pressed simultaneously, the tape recorder switches to record mode provided at least one channel has been enabled with the READY [36/56] key and the red LED next to the key flashes. During a recording the LEDs of the REC [35], PLAY [33], and READY [36/56] keys are continuously light.
The setting of soft jumper 11 (for programming details see 2.5.2) can be changed in such a way that the record mode can be activated from play mode by simply pressing the REC [35] key (but PLAY and REC still have to be pressed to enable recording from the STOP condition).

From record mode it is possible to switch directly to fast wind, play or a locator function by pressing the corresponding key. The STOP [34] command immediately interrupts the record mode. Channels that are switched to SYNC reproduction automatically switch to INPUT with the drop in and back to SYNC with the drop out.

Drop-in:

Click-free changeover from SYNC reproduction to record mode is possible. Depending on the soft jumper setting, this is possible by either pressing REC [35] together with PLAY [33] or only the REC [35] key. The record head is switched on with a speed-dependent delay so that the erase head and the record head are enabled at exactly the same tape location.

Drop-out:

Click-free changeover from record mode to SYNC play mode is possible by pressing the PLAY [33] key. The record head is switched off with a speed-dependent delay so that the erase head and the record head are switched off at exactly the same tape location.

Notes:

Since the machine interrupts a recording immediately when the STOP [34] key is pressed, the drop-out process can no longer be executed. For joining recording segments without a gap it is necessary to switch from record to PLAY before STOP is activated. For the drop-in we recommend that you first switch to PLAY [33] and then to record (in order to prevent inaccuracies caused by the tape start).

Overlapping drop in:

If e.g. an applause is to be faded in with overlap at the end of a recording, the magnetic tape can be lifted off the erase head by means of the tape lifter [6]. The machine is then restarted in record mode and the tape lifter slowly released. The tape first contacts the record head and the applause is added to the existing modulation. When the tape lifter is released, the tape also contacts the erase head. The existing modulation is erased and only the applause is recorded.

2.4.10 SYNC reproduction SYNC [38]

The SYNC [38] key switches the corresponding channel to SYNC reproduction. This means that the output audio signals are not supplied by the reproduce head but by the record head via the reproduce amplifier.

Since there is no time offset between the record and the "reproduce" head in this mode, it is possible to add a synchronous recording to a channel with an existing recording (e.g. vocalization of instrumental music).

Procedure: Synchronous recording to channel 1

- Switch channel 1 to SYNC [38].
- Switch channel 2 to READY [36] and connect MIC to CH2.
- Select MIC ON [44] and adjust the sensitivity with the potentiometer [46]. (Possibly activate the attenuator [45], switch the phantom power on or off).
- Start the machine in record mode
- Monitor the music of channel 1 via the headphones [58] and add the vocal part via the microphone.

For technical reasons, the sync reproduce frequency response is limited to approx. 6 kHz at 3.75 ips, 10 kHz at 7.5 ips, 12 kHz at 15 ips, and 12 kHz at 30 ips. A degradation in quality is, therefore, inevitable with SYNC reproduction.

SYNC preselection:

SYNC reproduction can be preselected for a channel that has been readied for record mode. When the SYNC [38] key is pressed during a recording, the corresponding channel is connected to the INPUT. This channel is automatically switched to SYNC reproduction when the drop-out occurs (PLAY, STOP).

2.4.11 Spooling mode < > [31/32]

The < [31] key activates the fast wind in the forward direction, the > [32] key in the rewind direction. The tape will be wound at the maximum spooling speed.
The spooling functions are cancelled by STOP [34], PLAY [33], REC+PLAY [35,33], SHUTTLE [28], TAPE DUMP [30], LOC functions and by spooling in the opposite direction. It is admissible to switch from spooling directly to play or record mode. The LED of the preselected function flashes; the magnetic tape is decelerated, and the preselected function is only activated when the tape has come to a stop or reached the nominal speed.

Tape lifting

In spooling mode the tape is automatically lifted off the heads in order to minimize the wear of the tape and the audio heads.

- Automatic cueing:
  When the programmable LIFTER [26/27] keys is actuated (different functions can be assigned to the keys [26] and [27] by setting the respective soft jumpers [9 + 10], (see section 2.5.2) the tape lifter is retracted so that the tape makes contact with the audio heads. Depending on the setting of the soft jumpers, the tape lifting is defeated either for as long as the key is pressed or until the key is pressed again.

- Manual cueing:
  Cueing in spooling mode is possible by manually pressing the pinch roller [13] against the capstan shaft. The closer the tape is pushed against the reproduce head, the stronger the output signal. For safety reasons it is not possible to press the pinch roller completely against the capstan shaft.

Note:

In order to protect the treble speaker of the monitor boxes from overloads when the cueing function is active in spooling mode, the reproduce level is automatically attenuated by 12 dB.

2.4.12 Producing pancakes at reduced spooling speeds, LIBRARY WIND

The reduced spooling speed is intended for pancakes that are to be saved in a library. The tape is wound more gently and, due to the absence of an air cushion between the individual layers, also more tightly.
The library wind function is activated by pressing and holding down the SHIFT [23] key and simultaneously pressing the spooling key < [31] or > [32]. The library wind function is cancelled as soon as any tape transport function is selected.
To ensure that a smooth pancake can be produced with any type of tape, the reduced spooling speed can be individually adjusted with the trimmer potentiometer SHTL located below the left-hand tape splicing block [10].

2.4.13 Stop mode STOP [34]

The STOP [34] key has the highest priority and cancels all operating states such as play, record, spooling, SHUTTLE, and the LOC functions. The tape is immediately decelerated after this function has been selected. Any new command entered during the deceleration phase of the tape is stored and immediately activated when the tape speed required for this function is achieved.

2.4.14 Locator Z-LOC, LOC1 (LOC2, LOC3, LOC START) [24-27]

Depending how the keys [26] and [27] are programmed, up to three transfer locators and one zero locator areavailable (for programming refer to Section 2.5.2). All locator addresses refer to the main tape timer. When a locator function is called with activated auxiliary timer (LAP [20]), the machine switches from the auxiliary timer to the main timer before the locator function is executed. The LAP function remains switched off.

LOC:

When the Z-LOC [24] key is pressed, the tape is wound forward or backward at high speed until the tape location corresponding to the timer address 00.00.00 is reached.

LOC START:

When the LOC START [26/27] key is pressed, the tape is wound forward or backward at high speed until the tape address is reached at which PLAY or REC was activated the last time from STOP mode (prerequisite: standstill of the tape). The machine then switches to STOP mode. The play or record function can be preselected by pressing the corresponding key while the tape is being positioned. The LED of the selected function flashes until the function is performed.

LOC1...LOC3:

At least one transfer locator is always available with the LOC1 [25] key. One additional transfer locator each (LOC2, LOC3) can be assigned through corresponding programming of keys [26] and [27]. In this way up to three tape addresses can be stored and automatically searched at high speed by pressing the corresponding key. The locate function can be cancelled by pressing [34], < [31], > [32] or by selecting a different LOC function.
As is the case for the LOC START function, the play and record functions can be preselected.

Programming the locator addresses:

- Storing the current tape address:
  Position the magnetic tape at the desired tape address, press the SET [17] (the first digit in the display [22] flashes), and then the key of the transfer locator (LOC1...LOC3) in which the tape address is to be stored.

- Storing a known tape address:
  The locator address can also be entered via the keyboard without positioning the magnetic tape. Press the SET [17] key; the first digit in the display flashes. With the STEP [19] key you can now alter the value of the digit in single steps. Then press the SEL [18] key to access the next digit and alter it with the STEP [19] key. Repeat these steps until the tape address to be stored is shown on the display.
  Store the tape address by pressing one of the locator keys (LOC1...LOC3).

Reading out a LOC address:

- During a LOC process: Press the corresponding LOC key a second time.
- In any other operating mode: Press the SHIFT [23] key and then the corresponding LOC key.
  Whenever the display [22] does not indicate the current tape address, the two separating dots between the hours and minutes and between the minutes and the seconds flash.

Note: The locator addresses always relate to the actual tape address and are automatically converted when the tape counter is set to zero (RESET [21] key). When a different tape speed is selected, the current counter content as well as all locator addresses are recomputed and remain stored even when the tape recorder is switched off.

2.4.15 Programmable functions

The programmable keys [26] and [27] (soft jumper 09 and 10) as well as [53] and [54] (soft jumper 13) can be assigned to different function by changing the soft jumper status. The programming method is described in section 2.5.2.

KEY	SOFT JUMPER		STATUS
[26]	09	MODE ASSIGNMENT SOFTKEY 1 (Default status = 1)	0 = LOOP 1 = LOC START 2 = LOC 2 3 = LOC 3 4 = BACKSPACE 5 = FADER READY
[27]	10	MODE ASSIGNMENT SOFTKEY 2 (Default status = 4)	6 = LIFTER AS MOMENTARY KEY 7 = LIFTER FLIP-FLOP KEY 8 = REHAERSE

[53] [54]	13	MODE ASSIGNMENT AUDIO SOFTKEYS	2 CHANNEL VERSION	0 = TAPE A/B CCIR 1 = TAPE A/B NAB * 2 = REPRO HEAD A/B CCIR* 3 = REPRO HEAD A/B NAB 4 = CHANGE EQUILIZATION CCIR/NAB
[60]			TC 1/4" VERSION	0 = TAPE A/B CCIR 1 = TAPE A/B NAB 4 = CHANGE EQUILIZATION CCIR/NAB
WITHOUT		GENERELLY MODE ASSIGNMENT SWITCHABLE JUMPER	4 KANAL VERSION	0 = CCIR 1 = NAB

* Only when second Head is available (option); not available in Timecode-versions.

LOC: The locator functions are described in Section 2.4.14.

LOOP: This function performs a continuous loop between tape address 00.00.00 and the address stored in LOC1. The lower of the two addresses (timer reading 00.00.00) or a negative address in LOC1 is taken as the starting address. When the LOOP key is pressed the magnetic tape is positioned at the starting address and the play mode is activated until the ending address is reached. At this point the tape is automatically rewound to the starting address and the play mode is reactivated. This procedure is repeated until the LOOP function is cancelled with the input of a new tape deck command.

BACKSPACE:

While this key is pressed, the tape is rewound at approximately 4 times the nominal play speed (depends on the selected nominal play speed) without lifting the tape from the soundheads. The reproduce path is enabled for monitoring.
PLAY is automatically reactivated when you release this key.

LIFTER:

Depending on the soft jumper programming of the LIFTER function, the tape lifter is defeated either until this key is pressed again (soft jumper [9] or [10] set to status 7) or only for as long as this key is pressed (soft jumper [9], [10] set to status 6).
For a detailed description of the LIFTER function refer to Section 2.4.11 Tape lifter.

REHEARSE:

Simulates a recording (insert mode)
For channels selected with the READY [36] key, the sync signal is replaced by the input signal after the record command has been entered. However, the erase and record currents are not switched on. The sync/input changeover occurs at the right moment.
When the REHEARSE function is selected, the LEDs of the tape deck keys PLAY or PLAY and REC flash.

FADER READY:

Four different fader start modes can be selected. They are called mode A, B, C, and D.
Depending on the selected fader start mode (set with soft jumper 12), a FADER READY KEY may be required for enabling or disabling the fader start circuit (such a switch is required for mode B, C, and D).
Rather than with an external switch, this function can also be performed with key [26] or [27]. When the fader start circuit is enabled (FADER READY [26 or 27]), the yellow LED next to the key as well as the FAD LED in the display window [22] are light to signal the fader ready condition. When this key is pressed again, the circuit is disabled, the LEDs switch off, i.e. opening of the fader has no effect on the tape recorder. When the SHIFT [23] key is pressed together with the built-in fader ready key, the tape recorder starts in record mode when the fader is opened, provided at least one channel is switched to READY [36].

CCIR/NAB:

These keys are used for changing over between CCIR [53] and NAB [54] equalization standard which can be individually calibrated. The method of programming the keys [53/54] is described in Section 2.5.2

NAB

On timecode units the NAB [60] key changes over between CCIR and NAB equalization standard and vice versa if the soft jumper is correspondingly programmed.
If the yellow LED next to the NAB [60] is light, NAB equalization has been selected.
If the yellow LED next to the NAB [60] key is dark, CCIR equalization is selected.
Different audio calibration parameters can be stored for the NAB and CCIR standard.

TAPE A / TAPE B:

In this mode the keys [53/54] are used for changing over between two individually calibrated tape types (type A and type B). This is possible with CCIR or NAB equalization selected. The method of programming is described in Section 2.5.2

TAPE B: On timecode units the TAPE B [60] key changes over between the two individually calibratable tape types A and B if the soft jumper is correspondingly programmed. If the yellow LED next to the TAPE B [60] key is light, tape type B is selected. If the yellow LED next to the TAPE B [60] key is dark, tape type A is selected.

HEAD A/HEAD B: * In this mode the keys [53/54] are used for switching from the standard reproduce head (in REPRO mode) to the optional second reproduce head. This is possible with CCIR or NAB equalization selected. The reproduce level for each reproduce head is individually adjustable. The method of programming is described in Section 2.5.2

* On time code units this programming is not possible, i.e. when soft jumper 13 is selected, only the states 0, 1 and 4 can be selected.

2.4.16 Fader start

With the fader start circuit, the tape recorder can be started in PLAY mode by means of 5V...24 V DC or AC applied by a remote control unit between pins 11 and 12 of the parallel remote control socket. In the operating modes (FADER B, C, or D), the fader start must be enabled ("FADER START READY") by a switch that interconnects pin 6 (SR-READY signal) and 1 (ground) of the same socket. Direct fader start selection without a ready key is only possible in FADER A mode. The fader can also be enabled with the programmable FADER READY [26] [27] key of the local keypad or on the optional remote control. The function programmed in the tape recorder (FADER B, C, or D) is performed. When they SHIFT [23] key is pressed together with the local fader ready key [26] [27], the machine is started in record mode when the fader is opened, provided at least one channel has been set to READY [36].

Important: When the FADER READY function is switched off or when no READY [36] key is selected, fader start ready is automatically cancelled.

FADER A: Fader start without FADER START READY key. After the fader start the local keypad and the remote control keys are disabled, the built-in monitor speaker is muted (but not the headphones!). When the fader is pulled back (the fader switch opens), the tape recorder stops, but the built-in monitor speaker is only unmuted when the tape has come to a standstill. The machine can now again be operated.

FADER B: Fader start with FADER START READY key. In order to activate the fader start function, the FADER READY key must be selected (FAD LED in the display window [22] is on). After the fader start, the local keypad and the remote control keys are disabled, the built-in monitor speaker is muted (but not the headphones!). When the fader is pulled back (the fader switch opens), the tape recorder stops, but the built-in monitor speaker is only unmuted when the tape has come to a standstill. The machine can now again be operated. If the fader switch is actuated but the fader ready key has not been pressed (FAD LED is dark), the operating state of the tape recorder does not change.
Exception: in play mode the built-in monitor speaker is muted when the fader is opened and unmuted when the fader is closed.

FADER C: Fader start with FADER START READY key. After the fader ready key has been pressed, the local keypad and the remote control keys are disabled. The machine can only be started by opening the fader. The built-in monitor speaker is muted (but not the headphones!). If the fader switch is actuated but the fader ready key has not been pressed, the operating state of the tape recorder does not change.

Exception: in play mode the built-in monitor speaker is muted when the fader is opened and unmuted when the fader is closed.

FADER D: Fader start with FADER START READY key. Regardless of the position of the fader read switch, the local keypad and the remote control keys remain enabled, even after the fader start. The built-in monitor speaker is muted (but not the headphones!). If the fader switch is actuated but the fader ready key has not been pressed, the operating state of the tape recorder does not change.

Exception: in play mode the built-in monitor speaker is muted when the fader is opened and unmuted when the fader is closed.

FADER MODE TRUTH TABLE:

FADER MODE	A	B	C	D
FADER READY-KEY REQUIRED		■	■	■
FADER READY-NOT REQUIRED	■			
INTERNAL MONITOR MUTED	■	■	■	■
FADER CLOSED TRANSPORT DECK KEYS ENABLED	■	■		■
TRANSPORT DECK KEYS DISABLED			■	
FADER OPEN TRANSPORT DECK KEYS ENABLED				■
TRANSPORT DECK KEYS DISABLED	■	■	■	

LED Fader ready
LED Light = Fader start activ
LED off = No fader start possible

2.4.17 Tape timer [22]

The electronic tape timer always displays the real tape time in hours, minutes, and seconds, relative to the selected nominal tape speed (exception: varispeed mode). The timer has a display range -9 h 59 min 59 s to 99 h 59 min 59 s. The timer can be set to zero (00.00.00) by pressing the RESET [21] key.

When the end of the tape, a torn tape, or the tape leader is detected, the timer stops automatically. In waste basket mode (TAPE DUMP [30]) the timer continuous to run or stops, depending on the setting of the soft jumper 05 (Section 2.5.2).
Tape segments can also be timed (Section 2.4.18 Auxiliary timer).

In "adj" mode (Section 2.5.3) the tape timer display shows the setting of the audio parameters; in soft jumper programming mode (Section 2.5.2) it shows the setting of the selected software switch. When the SHIFT key is pressed followed by a LOC key, the tape timer displays the content of the locator assigned to the corresponding key.

Note: The locator addresses always relate to the actual tape address and are automatically recomputed when the tape timer is set to zero (RESET [21] key).

Setting the tape timer: Starting with software release 15/90, the tape timer can be set.
If the A807 is parked at the start of a music selection with a known start time, the start time can be read into the time timer if the tape timer reading deviates.

Procedure:

- Press the SET [17] key (first digit of the display flashes). If necessary modify the first digit with the STEP [19] key, otherwise press the STEP [19] key to advance to the next position to be modified, and set this position with the STEP [19] key to the desired starting time according to the list of selections.
  When you press the SHIFT [23] and SET [17] keys the start time is read into the tape timer and stored. All LOCATOR positions are recalculated so that the stored tape addresses are retained.

Exception:

- The zerolocator no longer parks at the old tape address, it now parks at the new zero position.

2.4.18 Auxiliary timer LAP [20]

The LAP [20] key activates a second (auxiliary) tape timer with a user-selectable reference (zero setting). The auxiliary timer mode is signalled by the LAP LED in the display window. The auxiliary timer can be set to zero (RESET [21] key at any tape address and can thus be used for determining the exact playing time of a selection without influencing the main timer or having to compute the difference between the start and the end time. When the LAP [20] key is pressed a second time, the display switches back to the main timer, the LAP LED switches off.

Note: When the LAP function is active, it is not possible to set a locator address. The locator addresses always relate to the main timer. When a locator key is pressed, the LAP function is automatically cancelled, the main timer is activated, and the tape is positioned at the selected locator address.

2.4.19 MONO/INSERT [55] (not available by 4-channel versions)

On two-channel and stereo models with channel selector buttons, this key is labelled with MONO; on all other models with INSERT. However, the actual function is always the same: the internal insert point of the 0 Ω amplifier is activated in the audio input and output path.

On stereo models the optional MONO/STEREO switch can be connected into the circuit at this point. A noise reduction system (Dolby) or a supplementary circuit of a different type can also be connected here.

The function of the MONO (INSERT) [57] key is enabled by moving the jumper JP48 (for 1/2" versions JP46) on the COMMAND PANEL BOARD 1.727.660.81 to position "B". The Audio control board 1.727.670.82 straps IS3, IS4, IS5 and IS6 on position B must changing by setting, so that the audio signals can be looped via the INPUT or the OUTPUT INSERT BOARD (MONO/STEREO SWITCH). With the jumpers JS1 and JS2 on the AUDIO CONTROL BOARD the user can define, whether the signal for the built-in monitor speaker is to be tapped before or after the insert point (Fig. 2.4.7).
To enable this function, the SHIFT [23] key must be pressed and held while the MONO or INSERT [57] key is pressed. When SHIFT and MONO/INSERT are pressed again, the function is switched off.

MONO The various modes of the MONO/STEREO switch are programmed by changing jumper settings.

Input: On the input section by setting the jumpers JP1 and JP2 on the M/S INPUT AMPLIFIER 1.727.441.00 / 451.00.

MONO MODE A: The input signal of channel 1 is recorded simultaneously on channel 1 and channel 2 (JP1 = A, JP2 = B).

MONO MODE B: The input signals of channel 1 and 2 are added and the aggregate signal recorded simultaneously on both channels (JP1 = A, JP2 = A).

MONO MODE C: The input signal of channel 2 is simultaneously recorded on channel 1 and channel 2 (JP1 = B, JP2 = A).

Output: On the output side by changing the jumpers JP1 and JP2 on the M/S OUTPUT AMPLIFIER 1.727.442.00 / 452.00.

MONO MODE A: The mono reproduce signals of channel 1 and channel 2 are added and reproduced via the output channel 1 (OUTPUT CH1) (JP1 = A, JP2 = B), the output channel 2 (OUTPUT CH2) remains muted.

MONO MODE B: The signals of both channels are added and the aggregate signal is simultaneously reproduced via both outputs
(OUTPUT CH1, CH2) (JP1 = A, JP2 = A).

MONO MODE C: The mono reproduce signals of channel 1 and channel 2 are added and reproduced via the output channel 2 (OUTPUT CH2) (JP1 = B, JP2 = A), the output channel 1 (OUTPUT CH1) remains muted.

2.4.20 Remote control

The following functions can be remote controlled with the parallel remote control: Play, record, spooling, stop, reset timer, zero loc, loc start, lifter, varispeed on/off and fader (fader ready) indirectly also back space (PLAY + <). Please note that the backspace speed is identical to the one in the rewind function, i.e. no matching to the normally selected tape speed.
The pin assignment of the remote control connector and the connection configuration are described in Section 2.3.3.

2.4.21 External VU-meter panel

Tape recorder versions with VU meter panel (VUK) are equipped with the following operator controls:

[40] VU-meter(s) for level indication

[41/48] Potentiometers for decreasing/increasing the output signal level, if

[42/49] the UNCAL keys are active.

[37 - 39] Output selector for determining the output signal on the XLR socket (input, SYNC or reproduce signal)

[36] Ready key to enable recording.

[4] Monitor speaker. (Automatically muted when the headphones [61] are plugged in)

[68, 69] Channel selection keys for monitoring the desired channel or both channels.

[65] Volume control (also influences the volume on the headphones socket [61] of the tape recorder).

[66, 67] Monitor selection keys. Determine whether the input or output signal are to be monitored (source/tape monitoring).

2.4.22 External stereo monitor panel

An external stereo monitor panel (with or without VU meters) is available as an option. It contains the following controls:

[66, 67, 70] Monitor selection keys. Select the signal to be monitored.

INPUT = Monitor the input signal (source monitoring
OUTPUT = Monitor the output signal (tape monitoring)
AUX = Monitor the auxiliary input (input signal from 5-pin XLR connector).

[65] Volume control (also influences the headphones socket [61] on the tape recorder.

[68, 71] Channel selection keys
If one of the keys [68] is pressed, the audio signal of the corresponding channel is connected to the monitor speaker.

- If key [71] is pressed, the left-hand speaker processes the signal of channel 1 and the right-hand speaker the signal of channel 2 (stereo mode).

2.4.23 Test generator (option) (only for 2-channel versions)

A test generator can be installed as an option in all 2-channel versions of the A807 MKII. The optional test generator includes the MONO/STEREO switch.
If only the test generator is required (without the MONO/STEREO switch), the MONO (INSERT) [57] key can be disabled by changing the position of jumper JP48 on the command panel board 1.727.662.83 (or 1.727.762/63/66.00in time code units) below the front tape deck cover.

- Jumper JP48 in position H as illustrated = mono/stereo switch disabled.
- Jumper JP48 in position L = mono/stereo switch enabled.

Command panel: 1.727.662.83

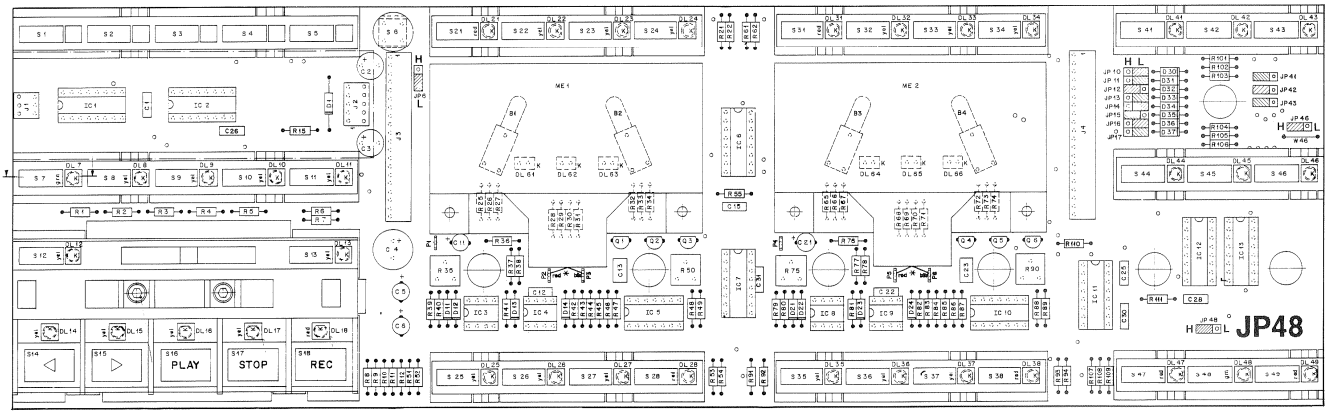

Fig. 2.4.13

The controls of the test generator are accessible from the operator panel and can be adjusted with a screwdriver. The test generator is switched on and the test frequency (60Hz, 125Hz, 1kHz, 10kHz, 16kHz) of the sine wave generator is set with theHz [62] switch. The test generator is disabled when this switch is in the OFF position.

Note: When operating with the test generator, make sure that no signals are available on the inputs (MIC INPUT and LINE INPUT). This signal would be mixed with the generator signal and could lead to measurement errors.

- On models without input selector, the signal cables on the inputs should be detached.
- On models with input selector the inputs should be switched off (MIC ON [44] and LINE ON [43] in off position).

The booster amplifier is operated with thedB [63] switch. The generator level can be attenuated by 10 or 20dB. At the same time the gain in the reproduce path is automatically increased by 10dB or 20dB; in this way the reference value of the VU-meter is the same as for nominal level. The booster amplifier can also be used when the test generator is switched off, e.g. when playing a reproduce test tape.

2.4.24 Editing, cutting the tape

Searching a tape address with fast wind

Any tape address can be searched by means of fast forward > [32] and rewind < [31] keys. However, additional facilities have been provided that may be more convenient: SHUTTLE [28/29], Z-LOC [24], LOC1 [25], and, depending on the internal programming (Softjumper 09 and 10), the keys [26] and [27] which support the following functions: LOC START, LOC2 LOC3, BACKSPACE.

The locator functions are described in Section 2.4.14, the BACKSPACE function in Section 2.4.15.

SHUTTLE [28/29]

The SHUTTLE [28] key activates the editing mode. The tape is not lifted so that cueing is always possible. Editing under assistance of the spooling motors is possible with the aid of the SHUTTLE CONTROL [29] wheel. When this wheel is turned, the tape is spooled in the corresponding direction. The greater the deflection of the wheel from its home position, the faster the spooling speed. An edit point can thus be conveniently searched and approximately aligned. For fine-positioning of the edit point, the tape can be moved forward or backward by manually turning the right-hand spindle [3]. The tape tension control and the reproduce paths are enabled.

Marking the tape:

The center of the reproduce head (head gap) can be marked on the reverse side of the tape by means of a grease pen or a soft pencil. A tape marker [11] is available as an accessory. A light pressure on the marking lever marks the tape with a stamp exactly at the reproduce head gap.

The tape can subsequently be cut at the marked position.

Cutting the tape:

The tape can be easily lifted off the reproduce head by means of antimagnetic scissors and cut exactly in front of the head gap. If the position of the reproduce head gap has previously been marked, the tape can be transported up to the optional scissors [12] and cut or be inserted manually into the optional cutting block [14] on the head shield or below the head block, and cut with a razor blade.

Splicing the tape:

The two tape sections to be joined are inserted with the reverse (marked) side facing up into the splicing block [10] or the cutting block [14] (only for 1/4" versions). The ends are butted together without overlap and spliced with an adhesive tab that is approx. 20 mm long and ¼" (1/2") wide.

2.4.25 "Waste basket mode" TAPE DUMP [30]

In "waste basket mode" (TAPE DUMP [30] key) the right-hand spooling motor [3] is disabled. Unwanted tape segments can thus be played into the waste basket. When the TAPE DUMP [30] key is pressed, the machine switches either to play or preselects the "waste basket mode", depending on the programming (see 2.5.2) with the soft jumper 08.

Mode A (soft jumper 08 in position 0):
The TAPE DUMP [30] key functions as a preselector. The "waste basket mode" is activated by pressing the PLAY [33] key. The tape is played but not wound up. The STOP [34] key interrupts the tape feed, but the TAPE DUMP function remains active until it is cancelled by pressing the TAPE DUMP [30] key again. When the "waste basket mode" is active, all tape transport functions except < [31], PLAY [33], and STOP [34] are disabled.

Mode B (soft jumper 08 in position 1):
The "waste basket" mode is activated directly by pressing the TAPE DUMP [30] key. The machine stops when this key is pressed again.

Retraction of a loose tape segment: (only possible in TAPE DUMP mode A):

If too much tape has been unwound in "waste basket" mode, it is not necessary to rewind it manually. Simply tension the tape with two fingers of your right hand (preferably gloved) and continually hold down the < [31] key. The left-hand spooling motor [2] rotates and slowly takes up the loose tape. (Fig.2.4.8)

This process can be stopped by releasing the < key.

The motor torque is limited and controlled in such a way that the tape can be easily decelerated by hand. As soon as the tape is released, the motor continuous to run only very slowly. The motor speed can be increased by a lightly tensioning to the tape segment.

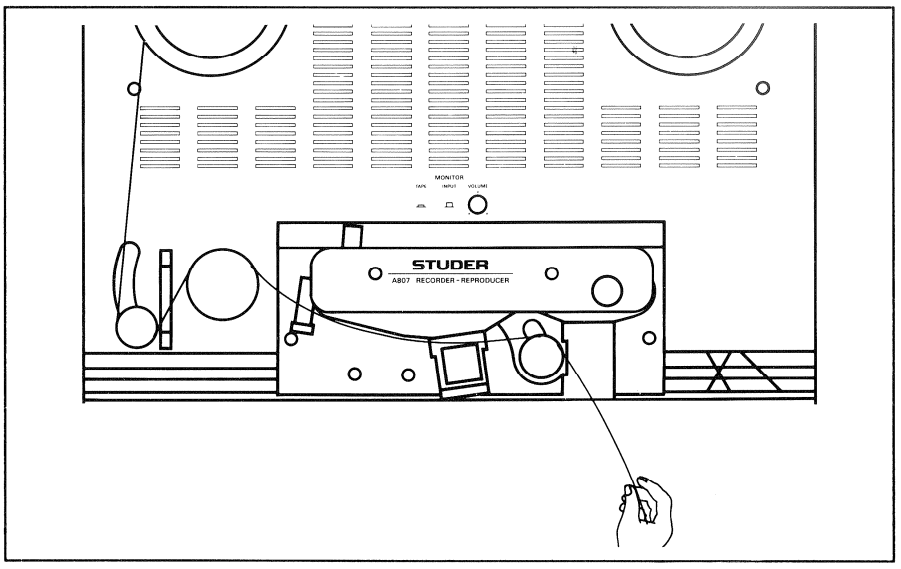

Fig. 2.4.8

For monitoring a recording while a loose tape is being drawn in with the right-hand spooling motor [3], the special dump edit mode can be preselected by pressing the TAPE DUMP and subsequently the SHIFT [23] key (Fig.2.4.15) In this mode the TAPE DUMP LED flashes. You can start this function by pressing the PLAY [33] key. The left-hand spooling motor is disabled and the loose tape is wound up by the right-hand motor. At the same time you can check the recording on the tape at the selected speed via the monitor speaker.
Press TOP to terminate this mode.

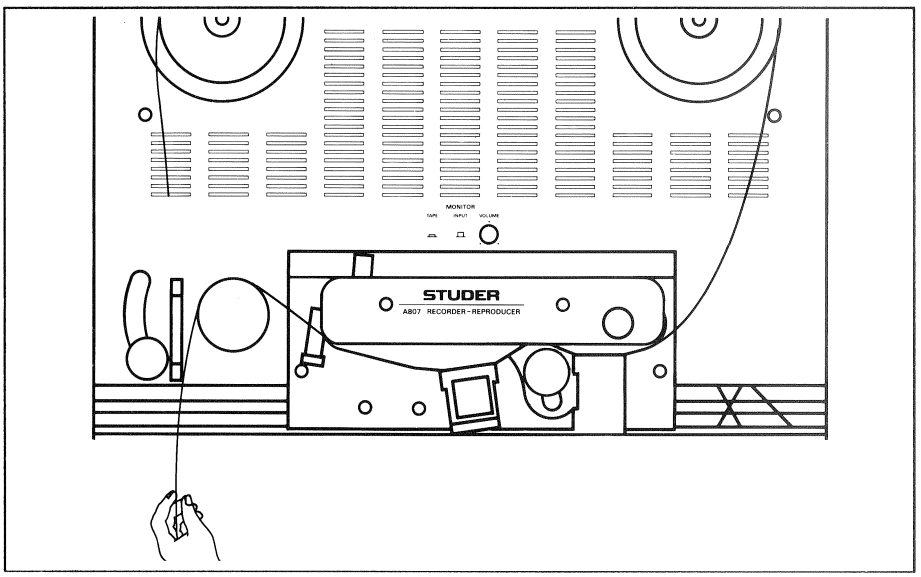

Fig. 2.4.15

If the spliced tape is inserted loosely in the tape path, i.e. if the tape tension sensor is not deflected, you can wind the tape
on the right-hand reels in section by pressing the key PLAY [33], < [31], or > [32].

To signal that no tape is inserted or that the tape is inserted only loosely, the LED or STOP key flashes for 10 seconds (i.e. the tape sensor lever is in the home position); subsequently the LED is switched off.

To make sure that no tape is inserted (particularly if the machine is remote controlled and if there is no direct line of sight to the tape recorder), the LED can be restored to the flashing condition for another 10 seconds by briefly pressing the STOP key. If the LED remains dark, the STOP LED (or the stop lamp of the remote control) is defective.

Playing a discarded tape segment

After a long editing session it may happen that many tape sections have been cut and that it is no longer clear as to which piece belongs where and which end of the tape is the beginning or the end.
With the A807 tape recorder you can play cut segments without first joing them and winding them on a reel.

Procedure:

- Thread the tape according to (Fig.2.4.16) and select the TAPE DUMP [30] function.
- With two fingers of your left hand tension the left-hand tape end in such a way that the tape makes contact with the head.
- In TAPE DUMP mode A start the reproduction by pressing the PLAY [33] key. The PLAY function can be cancelled by pressing the STOP [34] key.

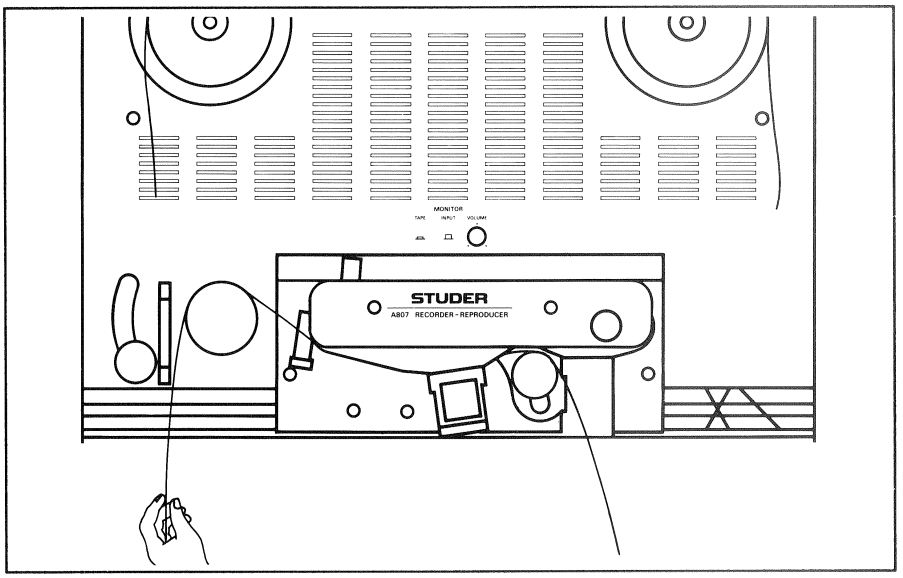

Fig. 2.4.16

2.5 Programming SW versions 20/92 and up

2.5.1 Hardware jumpers ¼" and ½" versions

Command panels 1.727.660.81-668.81

After the round knobs have been removed by pulling them off and the four fixing screws have been unfastened, the cover of the operator panel can be removed and the jumpers become accessible.
Jumpers 10 to 17 should only be changed if a version has been modified into another one.

Jumper 13

If jumper 13 (ready key version) on tape recorders equipped with ready keys [36] is set to position H (no ready keys), the effect will be that after power up the ready function (ready for recording) is automatically selected.

Jumper 6

With jumper 6 you can prevent unauthorized persons from modifying the audio calibration data in the RAM or the settings of the soft jumpers. For this purpose set jumper 6 to the position "H" (non operable). This disables the push button [16].

Jumper 46/48

Jumper 46 (on 1/2" versions) or 48 (1/4" version) enables the INSERT or (MONO) function [57].
If the mono/stereo selection electronics of the option external insert point is retrofitted, the corresponding jumper must be changed to position "L" (key enabled).

If the optional test generator is installed, the mono/stereo selection electronics is always included. Jumper 46 or 48 determine whether the mono/stereo selection electronics is also to be enabled.

- Jumper 46 or 48 in position "H" = Only the test generator is enabled.
- Jumper 46 or 48 in position "L" = Test generator and mono/stereo switch are enabled.

Command panel jumper 1.727.662 and 1.727.760...766

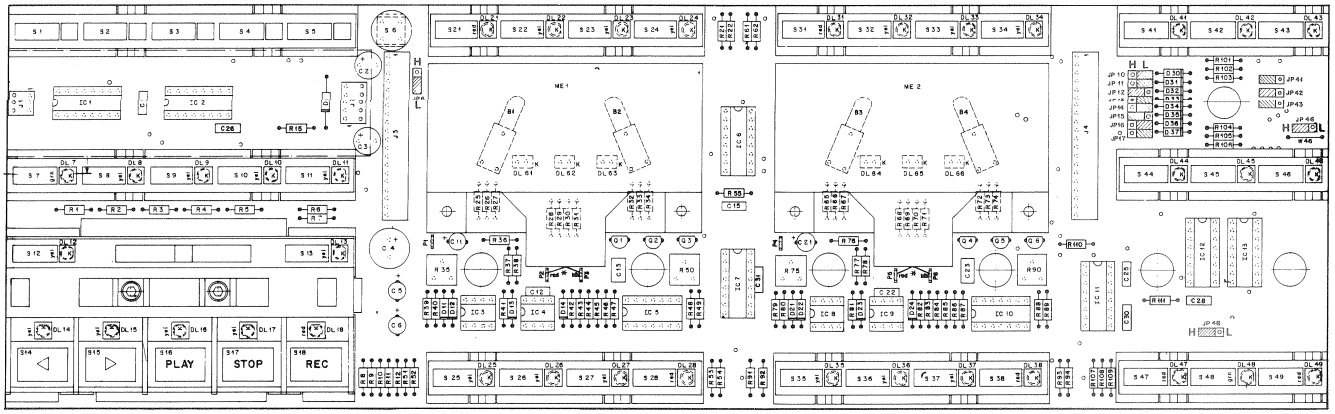

Jumper 6	**Pos. H:**	The programming of the softjumper is locked
	Pos. L:	The programming of the softjumper is enabled (see D2/56).
Jumper 10	**Pos. H:**	Settings for 4-Channel version
	Pos. L:	Settings for 2-Channel version
Jumper 11	**Pos. H:**	Settings for the high speed (HS) version 7,5, 15, 30ips.
	Pos. L:	Settings for standard speed version 3,75, 7,5, 15ips.
Jumper 12	**Pos. H:**	Settings for standard version with Record, Repro facilities
	Pos. L:	Setting Repro-only version (no Record facilities)
Jumper 13	**Pos. H:**	Version without READY-keys
	Pos. L:	Version with READY-keys
Jumper 14	**Pos. H:**	For erase heads with inline erasing tracks
	Pos. L:	For erase heads with staggered erasing tracks
Jumper 15	**Pos. H:**	Audio electronics board version: 1.727.47x.xx
	Pos. L:	Audio electronics board version: 1.727.46x.xx
Jumper 16	**Pos. H:**	Version with timecode tracks (TC-version)
	Pos. L:	Version without timecode facilities
Jumper 17	**Pos. H:**	Key-assignment for specific custumer
	Pos. L:	Standard key arrangement
Jumper 41-43	**Pos. H:**	Version without timecode tracks (TC-version)
	Pos. L:	Version with timecode tracks (TC-version)
Jumper 46		Only for 4-Channel versions (Command-Panel) 1.727.666.xx and 1.727.766.xx
	Pos. H:	The INSERT- resp. MONO-key [S46] is locked.
	Pos. L:	The INSERT- resp. MONO-key [S46] is enabled.
Jumper 48		Only for 2-Channel versions
	Pos. H:	The INSERT- resp. MONO-key [S48] is locked.
	Pos. L:	The INSERT- resp. MONO-key [S48] is enabled.

Command panel Hardware jumper

1/4" und 1/2" Versions

JUMPER		H L	(H = ON, L = OFF)
06	ADJUST KEY	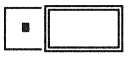	H = DISABLED L = ENABLED

10	CHANNEL VERSION	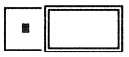	H = 4 CHANNEL L = 2 CHANNEL
11	SPEED VERSION	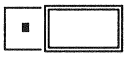	H = 7.5, 15, 30ips L = 3.75, 7.5, 15ips
12	ONLY PLAYBACK VERSION	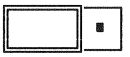	H = STANDARD (REC/REPRO L = PLAYBACK ONLYE
13	READY-KEY VERSION	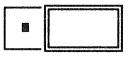	H = WITHOUT READY KEY L = WITH READY KEY
14	ERASE HEAD GAP	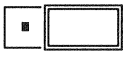	H = INLINIE L = STAGGERED
15	VERSION OF AUDIO ELECTRONICS BOARD	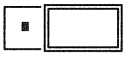	H = 1.727.47x.xx L = 1.727.46x.xx
16	TIMECODE VERSION	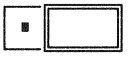	H = WITH TC CHANNEL L = NO TC VERSION
17	SPECIAL KEY LAYOUT	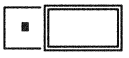	H = SPECIAL KEY LAYOUT L = STANDARD KEY LAYOUT

Only for 1/2" version available

46	INSERT (MONO) S 46	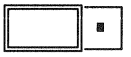	H = KEY S46 NOT ACTIVE L = KEY S46 ACTIV

Only for 1/4" version available

48	INSERT KEY S 48	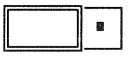	H = KEY S48 NOT ACTIV L = KEY S48 ACTIV

These hardware jumpers are standard programming for A807 1/4" VUK-version (speed 3.75, 15 and 30ips, without time code)

Audio control PCB 1/4" 1.727.672.00

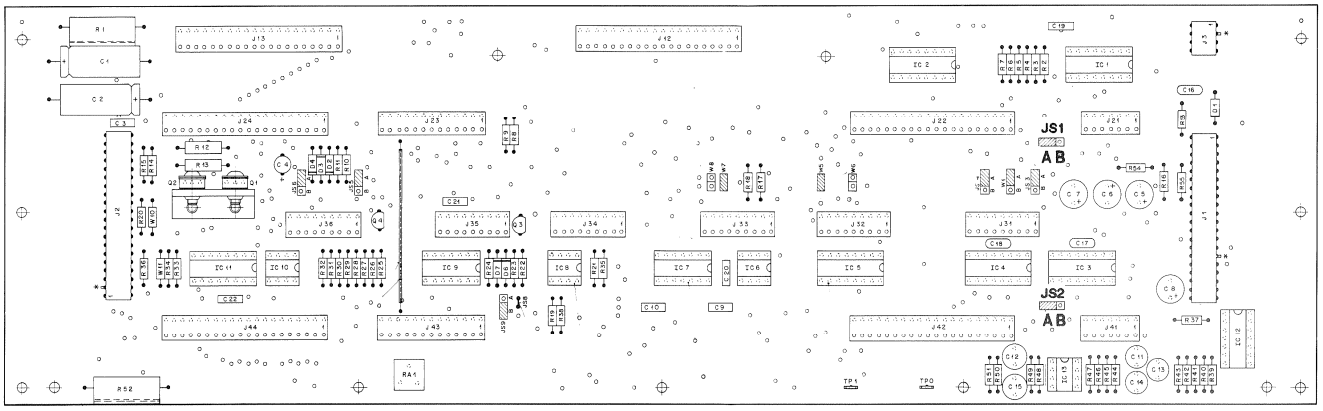

Jumper **JS1 in pos. A =** The input signal of CH1 is tapped before the insert point and fed to the XLR connectors and the monitor output.

JS1 in pos. B = The input signal of CH 1 is tapped after the insert point and fed to the XLR connectors and the monitor output.

JS2 in pos. A + B = Same as JS1, but applies to CH 2

Audio electronic PCB 1.727.470.00

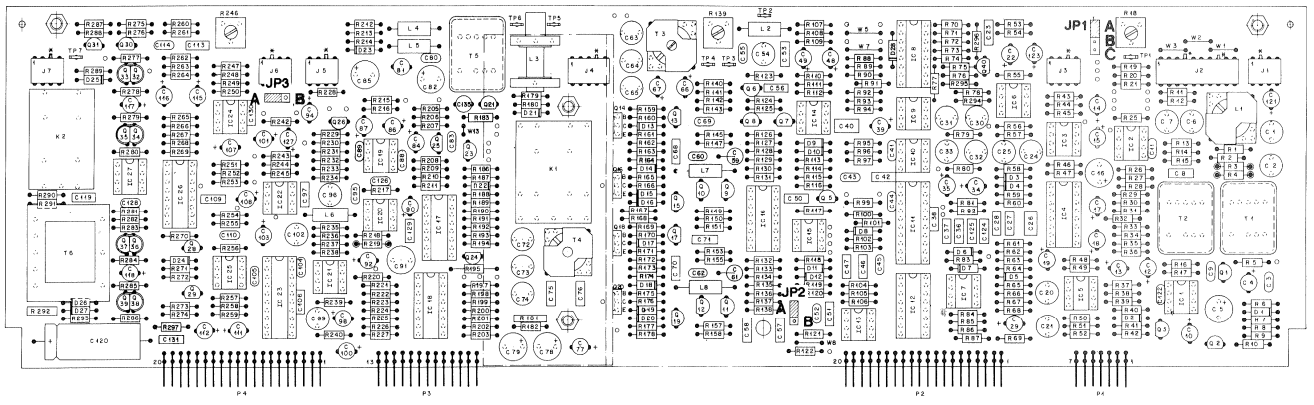

Jumper

JP1 = Input level sensitivity
Pos. A = Input signal -4dB to +12dB (standard)
Pos. B = input signal -17dB to -1dB
Pos. C = Input signal -30dB bis -14dB

JP2 = Dolby HX PRO
Pos. A = Dolby HX PRO on (standard)
Pos. B = Dolby HX PRO off

JP3 = Output level sensitivity
Pos. A = -4dB bis +12dB (standard)
Pos. B = -17dB bis -1dB

2.5.2 Soft jumpers — SW versions 20/92 and up

Certain functions can be selected or deselected by means of so-called software jumpers. It is also possible to assign different functions to some of the keys (designated as soft keys).

Selection of the soft jumper program

Most of the operational parameters can be set by "soft jumpers" i. e. programmed by software. Programming is possible by operating keys "adj." [16] and SHIFT [23] together. Press then "channel" [20] repeatedly until the wanted soft jumper appears.
By "up" [26] and "down" [27] the status of the soft jumper can be changed to the required value. By press SHIFT [23] and channel [20] together the last status of soft jumber was aktiv. However the newly updated soft jumper settings become effective immediately. This change is not automatically stored (indicated by flashing decimal point in the display). By activating "store" [19] the new status will be memorized.

Example

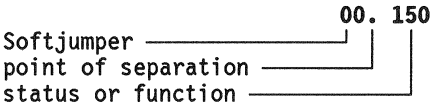

The soft jumper program can be terminated by pressing the adj [16] key again. All settings that have not been stored yet (flashing dot) will be lost. The newly stored soft jumper settings become effective immediately. Those that have not been stored are only effective for as long as the program is not terminated.

Soft jumper

JUMPER		STATUS
00	MUTE TIME FOR EACH SPEED	000 - 950 milliseconds in steps of 50 millisec.
01	RS 232 BAUD RATE	12 = 1200 BAUD 96 = 9600 BAUD
02	RS 232 ECHO MODE	0 = OFF 1 = ON
03	TAPE STOP WITH TRANSPARENT TAPE	0 = OFF 1 = ON
04	MONO/STEREO CHANGEOVER switched automatically to mono at speed 3.75 and 7.5ips	0 = OFF 1 = ON
05	COUNTER STOP IN DUMP MODE	0 = OFF 1 = ON
06	RETURN OF PINCH ROLLER IN EDIT MODE	0 = OFF 1 = ON
07	SPEED CHANGE	0 = DIREKT SPEED CHANGE 1 = SPEED SHIFT WITH SHIFT ONLY

JUMPER			STATUS
08	TAPE DUMP MODE		0 = KEY "TAPE DUMP" PRESELECTS FUNCTION ACTIVATION WITH PLAY 1 = DIRECT ACTIVATION
09	MODE ASSIGNMENT SOFTKEY 1 (Default status = 1)		0 = LOOP 1 = LOC START 2 = LOC 2 3 = LOC 3 4 = BACKSPACE 5 = FADER READY 6 = LIFTER AS MOMENTARY KEY 7 = LIFTER FLIP-FLOP KEY 8 = REHEARSE
10	MODE ASSIGNMENT SOFTKEY (Default status = 4)		
11	RECORD COMMAND DEFINITION		0 = KEY "REC AND PLAY" TO BE PRESSED TOGETHER 1 = IF MACHINE IN PLAY, PRESS "REC" ONLY.
12	FADER START DEFINITION		0 = A 1 = B (see truth table 2 = C on following page) 3 = D
13	MODE ASSIGNMENT OF AUDIO SOFT KEY	2 CHANNEL VERSION	0 = TAPE A/B CCIR 1 = TAPE A/B NAB 2 = REPRO HEAD A/B CCIR 3 = REPRO HEAD A/B NAB 4 = CHANGE EQUILIZATION CCIR/NAB
		4 CHANNEL VERSION	0 = CCIR 1 = NAB
		TC 1/4" VERSION	0 = TAPE A/B CCIR 1 = TAPE A/B NAB 4 = CHANGE EQUILIZATION CCIR/NAB
14	MODE ASSIGNMENT CHANNEL SELECTTION KEY		0 = INDIVIDUAL 1 = PARALLEL
15	AVAILABLE TIMECODE ELECTRONIC		0 = ACTIV 1 = NOT ACTIV
16	TIMECODE REFERENZ OF ASSIGNMENT REPRO/SYNC * not available in 2-channel		0 = NO REFERENCE 1 = CHANNEL 1 2 = CHANNEL 2 3 = CHANNEL 3 4 = CHANNEL 4
17	MASTER SAFE		0 = SAFE/READY SWITCH ACTIV 1 = MASTER SAFE
18	TRANSPARENT TAPE COUNTING		0 = TIMER STOPS ON CLEAR LEADER-TAPE 1 = TIMER ACTIVE ON CLEAR LEADER-TAPE
19	CALIBRATED LEVEL		0 = NO CALIBRATION 1 = CALIBRATED

The underlined settings in the status field are the default values.

FADER MODE TABLE

FADER MODE TRUTH TABLE:				
FADER MODE	A	B	C	D
FADER READY KEY REQUIRED		n	n	n
FADER READY KEY NOT REQIRED	n			
INTERNAL MONITOR MUTED	n	n	n	n
FADER CLOSED: TRANSPORT KEYS ENABLED TRANSPORT KEYS DISABLED	n	n	 n	n
FADER OPEN: TRANSPORT DECK KEYS ENABLED TRANSPORT DECK KEY DISABLED	 n	 n	 n	 n
LED Fader Ready LED Light LED off			=Fader start activ =No fader start possible	

Soft jumper 00

MUTE TIME

With the soft jumper 00, the mute time during the STOP-PLAY transition can be individually entered for each of the three tape speeds within the range of 00 ms to 950 ms in steps of 50 ms.

Soft jumper 01

BAUD RATE

The transmission rate (baud rate) of the serial RS232 interface can be set with the soft jumper 01. Two speeds can be set: 1200 or 9600 baud.

Soft jumper 02

ECHO MODE

Soft jumper 02 switches the echo mode of the serial RS232 interface on and off.

Soft jumper 03

LIGHT BARRIER

Soft jumper 03 switches the light barrier [8] on and off. When the light barrier is enabled, the machine switches to STOP when the transparent tape section is reached (or when a torn tape is detected). The tape recorder responds as follows in the various modes:

- In PLAY mode the machine stops immediately when the transparent tape section is detected. If transparent tape is in front of the light barrier when the machine is in STOP mode, the desired tape transport function (e.g. PLAY) must be pressed until the tape with the oxide coating covers the light barrier.
- In spooling mode (< or >) the tape recorder stops immediately when the transparent tape is reached. If the spooling key is continuously pressed, the transparent tape section will be skipped.
- In fader start mode the tape recorder also stops when the transparent tape is detected. If the transparent tape is in front of the light barrier when the fader is closed, the tape recorder starts in play mode when the fader is opened, and stops when the next transparent tape section is reached.
- Transparent tape sections are ignored in all LOCATE functions (Z-LOC, LOC1, etc.). The tape is positioned directly at the target address.
- Transparent tape sections are ignored in waste basket mode (TAPE DUMP).

Soft jumper 04

MONO/STEREO CHANGEOVER
Soft jumper 04 controls the mono/stereo changeover as a function of the selected tape speed (only active when MONO/STEREO switch is installed). When the changeover is enabled, the MONO priority is automatically activated when the machine is switched on with either 3.75 or 7.5ips. STEREO mode is automatically selected when the machine is started with 15ips or 30ips.

The selected states can always changed by pressing the SHIFT [23] and MONO [55] keys.

Soft jumper 05

COUNTER STOP IN DUMP MODE
With the soft jumper 05 a counter stop can be set in TAPE DUMP mode. In this case the content of the tape timer is frozen when the TAPE DUMP [30] is selected. It is not updated as long as the "waste basket" mode is active. As soon as this mode is terminated, the tape timer continues to run from the frozen reading.

Soft jumper 06

PINCH ROLLER RETRACTION
With the soft jumper 06 the pinch roller [13] can be retracted to the idle position when an "out-of-tape" condition is detected. An out-of-tape condition is recognized when there is no tape tension (tape tension sensor [9] in the idle position) and if no tape is detected by the light barrier [8] (both conditions exist e.g. during tape editing).
When the STOP [34] function is initiated or when the tape is edited with TAPE DUMP [30], the pinch roller stays in the cueing position.

Soft jumper 07

SPEED CHANGE
To avoid speed changes by hazard, the speed key [50] can be locked and enabled only if the SHIFT key [23] is pressed at the same time.

Soft jumper 08

TAPE DUMP MODE
With the soft jumper 08 you can define whether the dump edit mode is to be activated by pressing only the tape dump key [30] or whether this key is to be used as a setup key for the waste basket mode. In the latter case the tape dump mode is initiated by pressing the play key [33] (refer to Section 2.4.25).

Soft jumper 09/10

MODE ASSIGNMENT SOFTKEY 1 AND 2
Assignment of the functions for the two soft keys 26 and 27], refer to the functional description in 2.4.1.

Soft jumper 11

RECORD COMMAND DEFINITION
The soft jumper in position "0" defines that the PLAY [33] and REC [35] key must be pressed simultaneously for starting a recording. Position "1" defines that only the REC [35] key must be pressed from PLAY [33] mode in order to start a recording. However, if the tape is stopped, both keys PLAY [33] and REC [35] must be pressed.

Soft jumper 12

FADER START DEFINITION
Soft jumper 12 defines the fader start mode. The individual functions are listed in the table (refer to Section 2.4.16).

Soft jumper 13

MODE ASSIGNMNET OF AUDIO SOFT KEY [53 and 54]
(On time code versions only key [60])
The individual functions are described in Section 2.4.1 (keys 5349/54 and 60).

Note:
- For 1/4" timecode versions the positions "2" and "3" are not used because no additional reproduce head can be installed.
- For 1/2" machines only the equalization can be determined:

Position 0 =	CCIR
Position 1 =	NAB

Soft jumper 14

CHANNEL SELECTION PARALLEL/INDIVIDUAL
Soft jumper 14 defines whether the channel selection keys READY [36], INPUT [37], SYNC [38], REPRO [39] change over both channels simultaneously or whether the channels can be changed over individually (requires software version 15/90 or later).

Soft jumper 15

TIME CODE TIME COMPENSATION ON/OFF
In position **"0"** the time code signal (input or reproduce signal) is routed via the recalculation circuit so that it can be recorded or reproduced in synchronism with the audio signal.

In position **"1"** the time compensation is disabled, i.e. the time code signal is recorded directly on tape or connected from the reproduce head to the output.

Soft jumper 16

TIME CODE CHANGEOVER SYNC/REPRO
The soft jumper 16 defines whether the SYNC/REPRO [58] changeover of the timecode channel can be effected individually or whether the timecode channel automatically assumes the status of a selectable channel.

Example: Jumper Pos.1
If the audio channel "1" is switched to SYNC [38], the time code channel also switches to SYNC (LED on the right of the SYNC [58] key is light, see Section 2.4.1).

Soft jumper 17

MASTER SAFE SAFE/READY
The soft jumper 17 disables in position **"1"** the SAFE/READY switch. The machine is on MASTER SAFE.

Soft jumper 18

TRANSPARENT TAPE COUNTING ON/OFF
In position **"1"** the Tape Timer counts sections with transparent leader tape and stops counting in position **"0"**.

Soft jumper 19

CALIBRATED LEVELS
The soft jumper 19 determines whether the machine is switched to calibrated or uncalibrated level after power-up. Recorders without potentiometers for RECORD level or REPRO/SYNC level have to be set to calibrated level (1).
0 = No calibration: the input and output levels have to be adjusted with the corresponding potentiometers. The UNCAL LED's are light.
1 = Calibrated levels: input and output are switched to line level.

2.5.3 Programming the audio parameters

When you press the microswitch adj [16] by means of a pointed tool, the A807 tape recorder is switched to audio alignment mode. In this mode the display [22] of the tape timer no longer shows the current tape address but information concerning the audio parameters. The three red LEDs to the right of the display indicate which parameter is being displayed (functions identified with lower case letters: lvl, trbl, and bias).

In addition the functions of the keys LAP [20], SEL [18], STEP [19], LOC START [26], and BACKSPACE [27] change to the functions specified in yellow lettering below the keys.

LAP	=	channel
SEL	=	parameter
STEP	=	store
LOC START	=	down
BACKSPACE	=	up
TAPE DUMP	=	input (only in models without output signal selector)

In adj mode the machine remains operable so that play and record commands can be entered and different tape speeds can be selected, and for switching over between CCIR/NAB, TAPE A/B, or HEAD A/HEAD B. The tape timer also continues to run internally.

A detailed description concerning the alignment of the audio parameters can be found in Section 4.2 of this manual (calibration). Only the method for entering the parameters is described here.

- Switch the machine to the alignment mode by pressing the adj [16] key.
- Select the desired tape speed, equalization standard, tape type or reproduce head by pressing the appropriate keys.
- Select the desired operating mode (REPRO, SYNC or READY+REC).
- Select the audio channel to be calibrated by pressing the channel [20] key.
- Select the parameter to be adjusted by pressing the param [18] key.

lvl	=	level adjustment
trbl	=	treble correction
bias	=	bias adjustment

- With the down [26] and up [27] key you can modify in the desired direction the decimal value and consequently the levelselected with param [18].
- When the setting is correct, save the value by pressing the store [19] key.
- Press the adj [16] key again to quit the alignment mode. All modified values that have not been stored yet (identified by a flashing dot) will be lost. The machine continues to operate with the old data.

Exampel:

The display [22] shows the following information:

A1 .025 LED: lvl

The letter A in the first position of the display signals the "adj" mode. The digit in the second position of the display specified the audio channel:

1 = CH1 (left)	2 = CH2 (right)

The last three digits of the display specify the decimal value of the setting (min. = 000, max = 255). The dot between the numbers indicates whether or not the value has been stored.

- If the dot is continuously light (▪) = the value has been stored.
- If the dot flashes (*) = the value has been entered but not stored.

The program can be terminated by pressing the adj [16] key again. All values that have not been stored yet (flashing dot) will be lost.

The newly stored parameter values become effective immediately. Those that have not been stored are only effective for as long as the program is not terminated.

Function chart

FUNCTION KEY		INDICATION			COMMENT
CENTER FIELD	LEFT FIELD	CH	LED	DISPLAY (*=flashing dot, ▪=permanent dot)	
REPRO	adj.	1	lvl	A1 ▪025	Programm call, last stored setting
or	up			A1 *026	Level up to 026
SYNC	up			A1 *027	Level at 027
	:			:	:
or	up			A1 *255	Max. level
READY+	down			A1 *254	Level down to 254
RECORD	store			A1 ▪254	Level value 254 stored for channel 1
	channel	2	lvl	A2 ▪030	Last stored level for channel 2
	up			A2 *031	Level up to 031
	:			:	:
	up			A2 *122	Level at 122
	down			A2 *121	Level down to 121
	store			A2 ▪121	Level value 121 stored for channel 2
	channel	1		A1 ▪254	stored level for channel 1
	param		trbl	A1 ▪122	stored treble setting for channel 1
	up			A1 *123	treble up to 123
	store			A1 ▪123	setting 123 stored
	channel	2	trbl	A2 ▪153	stored treble setting for channel 2
	down			A2 *152	treble down to 152
	store			A2 ▪152	setting 152 stored for channel 2
ONLY	param	2	bias	A2 ▪089	Bias setting for channel 2
in	up			A2 *090	Bias up to 090
READY+	store			A2 ▪090	Bias setting 090 stored for channel 2
RECORD					
	channel	1	bias	A1 ▪112	Bias setting for channel 1
	down			A1 *111	Bias down to 111
	store			A1 ▪111	Bias setting 111 stored for channel 1
	adj.				Quit program

2.6 Serial interface RS232

The STUDER A807 tape recorder is equipped with a serial interface (RS232) for operation with a terminal, a computer, or for remote control of the tape deck functions.

2.6.1 RS 232 Standard interface

The term "RS232" defines a connection between a "terminal" (computer) and a "modem" (A807) for the purpose of exchanging data. In addition this standard defines the:

- Electrical characteristics (level, lines)
- Mechanical characteristics (connector)
- Signal descriptions
- Standard connections.

The interface can operate with a data rate of up to 19.2 k baud (On the A807/A810/A812/A820 up to 9.6 k baud) and cable lengths of up to 15 m. The signal levels are defined as follows:

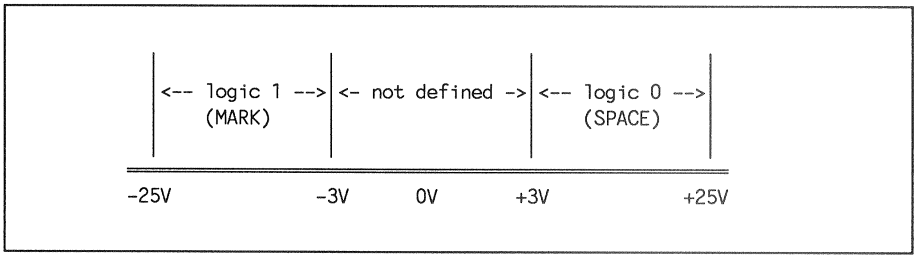

The 25-pin connector defined in this standard supports various interface structures. The full pin assignment is rarely used nowadays. Modern systems frequently use a minimal structureaccording to 2.5.4 for the terminal-modem or terminal-terminalconnection and consequently need only a smaller 9-pin connector.

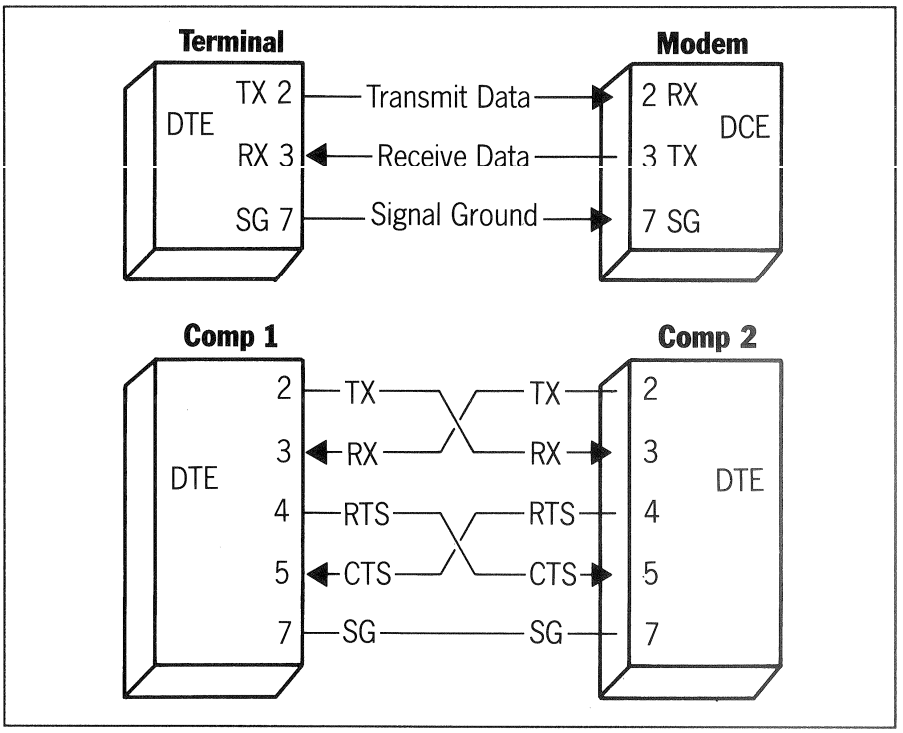

Fig. 2.6.1

All extensions (e.g. baud rate, code, synchronous/asynchronous connections, number of start/stop bits, parity, hardware/software handshake) are defined by the manufacturer.

2.6.2 RS 232 Interface of the A807

A 9-pin connector is used for the serial interface of the A807 tape recorder. With a correspondingly prepared adapter cable it is possible to define whether a unit should function as a terminal or a modem.

Recoder 9-pin plug		Terminal 25-pin plug		Modem 25-pin plug	
Signal	Pin	Signal	Pin	Signal	Pin
SNDATA	2	Trans. Data	2	Trans. Data	3
RCVDATA	8	Record Data	3	Record Data	2
GROUND	9	Signal Ground	7	Signal Ground	7

No additional handshake lines are used. A software handshake (X ON/X OFF protocol) is implemented for all transmission rates, however it is only required for 9.6 k baud.

X ON	= 0001 0001 (ASCII: DC1)	= resume
X OFF	= 0001 0011 (ASCII: DC3)	= interrupt

Upon receipt of an X OFF, the tape recorder still transmits up to 2 characters. After the tape recorder itself has transmitted X OFF, it can still receive five characters without losing a command.
Fixed settings:

1 start bit 1 stop bit 8 data bits No parity bit

The baud rate can be set with the aid of soft jumper 01 (1200 or 9600 baud).
Only ASCII characters are admissible as data!

2.6.3 Working with the serial interface RS 232

The computer or the terminal are to be connected to the tape recorder by means of an adapter cable fitted with a 9-pin socket.

The computer or the terminal should be set as follows:

1 start bit, 8 data bits, 1 stop bit, no parity bit, no echo mode, baud rate 1200 or 9600 baud. The handshake lines CTS and RTS are to be connected to "LOW".

After a RESET of the tape recorder (switching the tape recorder off and on again), the following message is displayed on the screen:

A807

The desired commands can now be entered via the terminal keyboard according to the table below. Most commands are not executed until the ENTER or LINE FEED key is pressed.

Important: In addition to the processor for controlling the tape deck and audio electronics, TC versions are equipped with a separate processor for TC signal processing.
For exchanging certain information these two processors must communicate with each other across the serial interface. For this purpose the external interface is briefly interrupted (approx. 30 ms) and X OFF is signalled. After the internal data transmission has been completed and X ON transmitted, the external interface functions again in the normal manner.

Command list

Audio commands		
command (_ = blank, / = CR, * = blank or CR)	A807 Response	Remarks
Sofware update: June 90		
STP*	<CR><LF>	Stop
RWD*	<CR><LF>	Rewind
FWD*	<CR><LF>	Forward
PLY*	<CR><LF>	Play
REC*	<CR><LF>	Record (direct)
WNF <SPEED>	<CR><LF>	Controlled wind forward
WNR <SPEED>		Controlled wind reverse
SSA*[1]	<CR><LF>	3,75 ips (9,5 cm/s)
SSB*	<CR><LF>	7,5 ips (19 cm/s)
SSC*	<CR><LF>	15 ips (38 cm/s)
SSD*[1]	<CR><LF>	30 ips (76 cm/s)
NS?*	XX<CR><LF> XX = 00...03	Nominal speed ? 9,5 cm/s (3.75 ips) to: 76 cm/s (30 ips)
VEN*	<CR><LF>	External varispeed on
VEF*	<CR><LF>	External varispeed off
FEN*[2]	<CR><LF>	Fader enable on
FEF*[2]	<CR><LF>	Fader enable off
EDT*	<CR><LF>	Lifter mode on
LFT*	<CR><LF>	Lifter mode off (tape not on head)
LOC <adress>	<CR><LF> <hh:mm:ss>	Posittioning at the timer: reading hh:mm:ss e. g. : LOC_01:20:15 or: LOC_-1_03_22
LMV <adress>	<CR><LF> <XXXXXX>	Posittioning at the number of tacho pulses <XXXXXX > * e. g.: LMV_00AE4F * (* = 3 Byte HEX)
MV?	<CR><LF> XXXXXX	Move roll counter ? set counter hh:mm:ss
STM <adress>	<CR<LF <hh:mm:ss>	e. g. STM_-0:43:57 or: STM_00_55_12
TM?*	<CR><LF> <hh:mm:ss,xx>	Read out of the tacho pulse number xx = xx/256 s

Note: [1] = Only possible if speed change is not interlocked with the SHIFT key by means of the softkey 07.
[2] = Only feasible in FADER START MODE B, C or D.

Tape deck commands (cont.)		
DST*[3]	<CR><LF> <hh:mm:ss,x>	Continuous indication of the tape deck counter and status (xx=xx/256 seconds, Y=status [2 words HEX]
ST?*	<CR><LF>	Tape deck status ?
	XX	(xx = 1 Byte HEX)
	XX = 81	Tape out achieved
	XX = 01	Tape loaded, no tension
	XX = 82	STOP, tape tension
	XX = 02	STOP not achieved
	XX = 83	Rewind achieved
	XX = 03	Rewind not achieved
	XX = 84	Fast forward achieved
	XX = 04	Fast forward not achieved
	XX = 85	PLAY achieved
	XX = 05	PLAY
	XX = 86	Play varispeed achieved
	XX = 06	Play varispeed
	XX = 88	PLAY external ref. achieved
	XX = 08	PLAY external ref.
	XX = 89	Record achieved
	XX = 09	Record
	XX = 25	Reverse play
	xx = A5	Reverse play achieved
	XX = C0	SHUTTLE backward achieved
	XX = 40	SHUTTLE backward
	xx = C1	SHUTTLE forward achieved
	xx = 41	SHUTTLE forward
	XX = C2	Locate rewind achieved
	XX = 42	Locate rewind
	XX = C3	Locate forward achieved
	XX = 43	Locate forward
	XX = CA	Rewind control achieved
	XX = 4A	Rewind controlled
	XX = CB	Wind forward controled achieved
	XX = 4B	Wind forward controled
	XX = 59	TAPE DUMP
	XX = D9	TAPE DUMP achieved
ESY	<CR><LF>	Enable synchronizer
SD?*	DD.WW.YY	Inquiry of software rellease date ? DD = Day WW = week YY = Year
MT?	aa<CR><LF>	Inquiry of machine type? aa = Machine type number 5 = 807 MKII
Note: 3 = Continuous status indication is terminated with the command "Control X".		

Audio commands		
command (_ = blank, / = CR, * = blank or CR)	A807 Response	Remarks
ION/	<CR><LF>	Insert on (set mono)
IOF/	<CR><LF>	Insert off (set stereo)
SNBΔ	<CR><LF>	Set NAB equalization
SCRΔ	<CR><LF>	Set CCIR equalization
STAΔ	<CR><LF>	Set tape sort A
STBΔ	<CR><LF>	Set tape sort B
SRH*	<CR><LF>	Rehearsel mode on
CRH*	<CR><LF>	Rehearsel mode off
AA?	<CR><FL> aabbccdd aa: 0 = Safe 1 = Ready/record bb: 0 = Tape 1 = Input cc: 0 = Reproduce 1 = Sync dd: 0 = Demute 1 = Mute	Channel 1...8 status MSB(xx) : channel 8 LSB (xx) : channel 1 xx = aa...dd
REA_i/	<CR><LF>	Set channel i to ready i=1, 2, 3, 4, E, F
SAF_i/	<CR><LF>	Set channel i to safe i = 1,2, 3, 4, E, F
INP_i/	<CR><LF>	Set channel i to Input i=1, 2, 3, 4, E, F
SYN_i/	<CR><LF>	Set channel i to synch i = 1, 2, 3, 4, E, F
REP_i/	<CR><LF>	Set channel i to repro i = 1, 2, 3, 4, E, F
MTN_i/	<CR><LF>	Set channeli to Mute i = 1, 2, F i = 1, 2, 3, 4, F F = 2 Kanal oder 4 Kanal
MTF_i/	<CR><LF>	Demute channel i i = 1, 2 F i = 1, 2, 3, 4, F F = 2-channel, or 4-channel

Δ To activate only, if the corresponding function has been selected by soft-jumper (13).
Not possible with 4-ch recorders (blocked).

Audio commands (cont.)		
SAP* <i,j,xx>	<CR><LF>	Set audio parameter and store i = channel 1 or 2 j = D/A converter xx = 1 Byte HEX j: 0 = Level REPRO/SYNC 1 = Treble REPRO/SYNC 4 = Level RECORD 5 = Treble RECORD 6 = Bias RECORD
PAP* <i,j,xx>	<CR><LF>	Set audio parameter without storing i=channel 1 or 2 j= D/A converter xx = 1 Byte HEX j: 0 = Level REPRO/SYNC 1 = Treble REPRO/SYNC 4 = Level RECORD 5 = Treble RECORD 6 = Bias RECORD
AP?* <i,j>	<CR><LF> XX	Inquiry audio parameter XX = 1 Byte HEX i = channel 1 or 2 j = D/A converter j: 0 = Level REPRO/SYNC 1 = Treble REPRO/SYNC 4 = Level RECORD 5 = Treble RECORD 6 = Bias RECORD

Machine and timecode commands		
LCD*	<CR><LF>	Local keybord disabled
LCE*	<CR><LF>	Local keybord enabled
TC	<CR><LF> [Y,N]	Timecode present on tape? Y = Yes; N = No
TCN	<CR><LF>	Set timecode delay aktiv
TCF	<CR><LF>	Set timecode delay bypassed

The above list of commands may not necessarily be complete. It will be updated or extended as required.

2.7 Care instructions

Daily care is limited to cleaning the heads, the capstan shaft, and all elements that come in contact with the tape. Dust and oxide particles of the magnetic coating accumulate principally on heads and the tape guidance elements. This can lead to drop outs.
Cleaning should, therefore, be performed daily, or if contamination is visible, even more frequently.

For proper care of the tape recorder we recommend the STUDER CLEANING KIT (part No. 10.496.010.00). It contains all utensils required for cleaning a tape recorder:

- Head cleaner
- Aluminite cleaner
- Felt sticks
- Cleaning rag

Procedure: Moisten a felt stick or the cleaning rag with a small amount of head cleaner and clean the heads and all elements that come in contact with thetape. Use a second felt stick or a dry section of thecleaning rag to wipe the cleaned parts dry.
Normally, the capstan shaft does not rotate when the recorder is not switched to play mode. For cleaning purposes a special function has been provided: When the magnetic tape is unthreaded (tape tension sensor in idle position, light barrier not covered), the capstan shaft continues to rotate for as long as the PLAY [28] key is pressed. For cleaning aluminum surfaces use the special aluminite cleaner. It removes the dirt and restores the metallic lustre of the aluminum.

Caution: Make sure that neither head cleaner nor aluminite cleaner penetrates into the bearing of the capstan shaft!
The acrylic panels of the VU-meters are not resistant to solvents!

Lubricating the capstan bearing: Do not apply oil! The capstan motor contains permanently lubricated ball bearings → Damage to the ball bearings may occur!
A sticker-label with the same information is attached to each capstan motor.

Please note: Earlier capstan motors are equipped with sintered sleeve bearings.

The capstan motor and its sintered-sleeve bearing are virtually maintenance-free. To replenish the grease in the bearing, sintered-sleeve capstan bearings should be re-greased annuallyor after a prolonged idle period.
For relubrication use only the recommended lubricants!

For oil lubricated capstan motors apply one drop of PDP 65 oil every six months. (Order No. 20.020.401.04). This motor version is not marked with any sticker-label.

For **grease lubricated** capstan motors (in production since 1.1.1988; identified by a **label**), only the liquid grease CONSTANT GLY 2100 (Part No. 20.020.401.10) should be used.

Procedure: On grease lubricated capstan motors (red label) lift off the upper plastic bearing cap and apply a few drops of liquid grease into the bearing gap (between the capstan shaft and the bearing).

Note: The bearing seat of capstan shafts is ground to the internal diameter of the pressed in sintered-sleeve bearing within very close tolerances. For this reason it is impossible to replace the bearing shaft in the field if any service is needed. Capstan motors should always be shipped to the national STUDER dealer for overhaul.
All earlier capstan motors returned to STUDER for overhaul will be refurbished to the new ball-bearing version!

3 Tape deck electronics

3.1 Circuit description 1
3.1.1 Introduction 1
3.1.2 Power supply 2
3.1.3 Control TAPE DECK ELECTRONICS 3
3.1.4 Tape tension sensor board 4
3.1.5 Spooling motor control 4
3.1.6 Capstan motor control 8
3.1.7 Command panel 11

3.2 Deinstalling the assemblies 12
3.2.1 Headblock assembly 12
3.2.2 Covers 13
3.2.3 Tape deck electronics PCB 14
3.2.4 Amplifier module 14
3.2.5 Command 16
3.2.6 Tape lifter 17
3.2.7 Pinch roller assembly 18
3.2.8 Tape tension and move sensor 18
3.2.9 Tape brakes 18
3.2.10 Spooling motors 19
3.2.11 Spooling motor control 19
3.2.12 Spooling motor filter 20
3.2.13 Spooling Motor Tacho left 20
3.2.14 Capstan motor 20
3.2.15 Capstan motor control PCB 21
3.2.16 Power transformer 21

3.3 Mechanical alignment 22
3.3.1 Brake maintenance 22
3.3.2 Brake adjustment 22
3.3.3 Pinch force adjustment 23
3.3.4 Head adjustment check 24
3.3.5 Tape lift solenoid 25
3.3.6 Tape tension sensor 25
3.3.7 Tape tension 27
3.3.8 Lifting Pin 28
3.3.9 Capstan motor control 28
3.3.10 Varispeed circuit 29
3.3.11 Transparent tape sensor 29

3 Tape deck electronics

3.1 Circuit description

Note: A summary of all electronic assemblies is given in the following Section 3.1.1, "Introduction".

The assemblies are described individually in the Section 3.1.2 and following. A description of the AUDIO CONTROL and AUDIO ELECTRONICS assemblies can be found in Section 4.

3.1.1 Introduction

The entire electronics can be subdivided into function blocks (refer page 6/4):

- Power supply unit comprising the power transformer, rectifier, filtering (GRP 2..6), and stabilization (part of GRP 10).
- TAPE DECK ELECTRONICS
  (GRP 10) which is the heart of the machine; it supplies control commands to all other assemblies.
- SPOOLING MOTOR CONTROL, GRP 11
- CAPSTAN MOTOR CONTROL, GRP 20.
- COMMAND PANEL, GRP 30)

Audio assemblies (refer to Section 4.1).

In addition there is a number of peripheral devices such as sensors, remote control interfaces, and feedback which are described in conjunction with the assemblies in which they are
incorporated.

3.1.2 Power supply

The power supply is connected via an IEC connector with built-in primary fuse and an RF rejection filter to a voltage selector with which the line voltage can be set within the range of 100...140 V and 200...240 V.

Five electrically isolated secondary windings are connected individually via secondary fuses to the rectifiers and filtered. The smoothing is so efficient that power interruptions of up to approx. 100 ms duration do not adversely affect the operation. Each secondary voltage is produced individually; only the +60V is cascaded from +20 V and +40 V.
The stabilized phantom supply for the microphone socket is derived from the +60V. It normally is 48V but it can also be changed to 24 V or 12 V by changing the resistors R23, R25, and R30 (refer to circuit diagram). The circuit is current limited; if due to excessive current the voltage drop across R 18 is larger than on D8 (D 9 is required for compensating the voltage drop across the basis/emitter link of Q8), Q8 blocks and consequently also Q9. From the same non-attenuated voltage also the 25 V for controlling the EEPROMs is derived. The voltage reference is implemented with the Zener diodes D5 and D6.

The operating voltage for the logic is derived from a non-attenuated voltage of 24 V by a switching regulator (IC1) whose pulse duty factor is controlled as a function of the load. This switching regulator is clocked by the 76 kHz equipment clock (from IC 11/6). The filter circuit comprising L1 and C 5...7 are used for smoothing the output voltage. Because the TTL circuit is very sensitive to surge voltages, a crowbar circuit (Q2) has been provided which is triggered by D2 in the event of a voltage surge.

The operating voltage of ± 15 V is produced via normal three-step regulators (IC2 and 3).

The logical PWRON, signal derived from Q1, is of particular importance because 40 ms after a power failure it initiates a data protection routine via the switching regulator, i.e. at a time when the logic still functions correctly. Certain equipment states such as the tape speed and the selected equalization are saved in the EEPROMs so that this information is available when power returns. Other functions, particularly RECORD and READY are not saved but are set to the default setting after power is restored. Example: If the machine was in record mode, STOP mode is activated after the power is switched on again.

3.1.3 Control TAPE DECK ELECTRONICS 1.727.650 (GRP 10)

The CPU is a microprocessor type 6803 (IC12) that is clocked with a frequency of 4.9 MHz. It processes the various inputs and outputs corresponding commands to the connected assemblies.

The resident microprocessor program is stored in two EPROMs (IC14 and 15); a RAM chip (IC16) with a capacity of 2 x 8k is used for working storage. Data and parameters that should automatically be reestablished after power is switched on again are saved in EEPROM IC10 each time the power is switched off (refer to table page 6/9). Input signals are supplied by the following assemblies:

A MOVE SENSOR GRP 24.
The sensor signals are produced on the Move Sensor board; the light produced by the LEDs DLQ1 and 2 is switched off rhythmically by a rotating disc with rectangular serrations. The disc is driven by a tape guide roller which means that the frequency of the move sensor signal is a measure of the tape speed. The tape move direction can also be determined from the overlapping of the signals. The receiving photo transistors control Q1 or Q2 respectively; when they are through-connected, the current through the diode is increased by R3 or R7 (increasing of the hysterese).
The final signal shape is produced by the Schmitt trigger stages IC5 when they are input to the tape deck electronics board.

B SPOOLING MOTOR TACHO GRP 17...18
Each spooling motor has its own tacho whose circuit corresponds largely to the one of the move sensor. Since the signal frequency is proportional to the spooling motor speed, the pancake diameter can be measured by comparing the signals from the spooling motor tacho and the move sensor.
The tacho signals 1 M1-TACHO and M2-TACHO are taken to IC8 and IC9.
The tacho signal 2 is divided by 16 in IC9: in spooling mode the CPU can thus determine whether it wants to track the individual tacho signals (input P13) or the divided signal (input P12).

C Operator entries from the control panel are buffered in coded form in register IC 27 (see 3.1.6).

D The M3-SYNC signal (input P11) indicates that the capstan motor has synchronized to its control frequency.

E Commands can also originate from outside the machine:
- From the remote control (PARALLEL REMOTE CONTROL) or the SYNCHRONIZER PARALLEL PORT with buffer in registers IC29 and 30.
- From the connected bidirectional RS 232 interface.

Commands are output via the registers IC 25, 26, 28 and 31 as well as the RS 232 interface and the SYNCHRONIZER PARALLEL PORT. IC 18 functions as an address decoder for the ports in both directions. Unconventional is the control of the take-up spooling motor.
Normally the tape tensions are controlled on both sides by means of tape tension sensors or similar devices. However, there is no such sensor on the right-hand side of the STUDER A807; for this reason the control information for the right-hand motor must be obtained in a different way. The CPU knows the speed of the tape (move sensor) and the rotational frequency of the take-up motor (tacho 2). From these values it computes the required tape tension which is output to the spooling motor control via the D/A converter IC24.
From the move sensor information the CPU also knows the spooling speed and limits it to approx. 10 m/sec.

3.1.4 Tape tension sensor board 1.727.320 (GR13)

The tape tension sensor is equipped with an oscillator that oscillates with a frequency of approx. 833 kHz. The coupling of this signal from L1 to L2 is more or less damped by a shaped part mounted on the tape tension sensor so that a DC voltage proportional to the tape tension is obtained on C3 after rectification by D2. Through summation in C2 with the reference voltage for full tape tension sensor deflection set with R16, and subsequent inversion, the following voltage should be available on TP1 if the alignment is correct:

+4 V in the absence of any tape tension 0 V for maximum tape tension

The gain of IC2 is adjusted with R11.

3.1.5 Spooling motor control 1.727.340 (GRP11)

The principle is as follows:
The tape tension sensor controls the unwinding motor. From the ratio of the tape move speed (move sensor pulse) and the rotational frequency of the take-up motor the microprocessor computes the control voltage for the take-up motor.
The allocation of the control voltage to the corresponding motor is achieved with the commutation IC7.
The output voltage of the TAPE TENSION SENSOR BOARD (AN-TTENS) is taken via pin 4 of connector J2 to the spooling motor control 1.727.340.23. IC1/2 adds the tape tension reference value selected by IC2 to the ACTUAL tape tension value. The following reference values can be connected in accordance with the tape deck function:

- Reference value for PLAY tape tension
- Reference value for fast forward (FORW) tape tension
- Reference value for fast rewind (REW) tape tension
- Reference value for library wind speed (LIBR)

These four references are selected by means of the two signals MS-REFA and MS-REFB from register IC25 of the TAPE DECK ELECTRONICS BOARD 1.727.650.25.
The aggregate signal of IC1/2 is now taken to the input of IC1/1 which normally functions as a buffer. Via the FET Q4 the control voltage is taken to the previously mentioned commutation IC7 which in fast forward mode supplies the tape tension

sensor signals to the summation IC11/2. This IC functions as an inverter, except in shuttle mode. The (M1-CTL) signal can be measured on test point 4 and is taken via the comparator IC13/2 to the positive input of the pulse width modulator IC14/2.

The negative input of IC14/2 receives a saw tooth voltage of 76 kHz which is produced from the 76 kHz microprocessor clock (MS-C76k).
This square-wave signal is converted by C12 to needle pulses. The wiring of the current source Q9 ensures that the capacitor C21 is charged to operating voltage. With each needle pulse, transistor Q8 becomes conductive, causing the capacitor C21 to be discharged and recharged. The result is a saw tooth voltage that is available on the negative inputs of the pulse width modulators IC14/1 and IC14/2. The pulse duration on the output of the pulse width modulator IC14/2 is determined by the deflection of the tape tension sensor, i.e. the magnitude of the DC voltage. The higher the DC voltage the larger the pulse width on the output.

The pulse width modulated signal connects the small-signal transistor Q12, and the power transistors Q6 and Q7 connect the operating voltage for the spooling motors (+50 V) in the 76 kHz rhythm. The L/C element integrates the signal so that the required power for the spooling motor is available in the U-M1 signal.
The voltage for the other motor is supplied in a similar way, except that the DC voltage does not originate from the tape tension sensor but from the microprocessor (refer to block diagram).

The DC voltage M2-REFAN, computed by microcomputer from the ratio of the rotational speeds of the tape move sensor and the take-up motor is taken via pin 14 of connector J3 to the potentiometer R35 so that the maximum control voltage (10 V on TP5) can be set.
Via the amplifier IC5/1 and the commutation IC7 the signal is applied to the negative input of the summation amplifier IC11/1.
The M2-CTL signal is taken via the comparator IC13/1 to the pulse width modulator IC14/1 and connects the operating voltage +50 V via the transistors Q13, Q10, and Q11. The U-M2 voltage filtered by the storage choke L2 and by C25 is now taken to the corresponding spooling motor.

The three phases R, S, and T of the two 3-phase asynchronous spooling motors are controlled via the complementary power transistors BWD47 and BDW42.

For the left-hand motor M1 the transistors Q15, Q19 or Q23 connect one of the three phases to the positive voltage, and a second phase is connected to ground by one of the three transistors Q17, Q21, or Q25.

The PROM IC15 (IC18) ensures that the transistors switch in the correct sequence so that always one phase of the spooling motor is connected to the positive voltage, while the second phase is connected to ground. The third phase remains de-energized. Through the correct sequential commutation of the individual phases by means of the PROM, a rotary field is produced that puts the motor into motion.

The sense of rotation of the spooling motor is determined by the two signals M1-DIR and M2-DIR. The following rules apply:

- With a high signal the motor rotates in the take-up direction
- With a low signal the motor rotates in the supply direction.

The speed with which the individual phases are changed over determines the rotational frequency of the take-up motor.

The square-wave signal M1-TSENS of the left-hand spooling motor on pin 4 of connector J5 of the SPOOLING MOTOR TACHO LEFT 1.727.315 board and the square-wave signal M2TSENS of the right-hand spooling motor on pin 4 of connector J5 of the SPOOLING MOTOR TACHO RIGHT 1.727.316 board are taken via a Schmitt trigger IC4 to the commutation IC8 which connects the signal of the take-up motor to the mono flop IC6, depending on the tape move direction. For each incoming control edge this mono flop supplied a pulse of constant width.

After the integrator C9/1 a DC voltage (FRQ-CTL) is produced that controls the VCO IC17 (voltage controlled oscillator). On output 3 a frequency depending on the input voltage of the VCO is produced that is subsequently divided by the frequency divider IC16 and which is used by the two PROMs as the clock for controlling the individual motor phases.

The following rule applies:

- The higher the speed of the take-up motor the larger the number of constant-width pulses that appear on the output of IC6.

This results in a smaller DC voltage after the integrator which in turn leads to a higher control frequency of the spooling motor that ranges from 35 to 70 Hz.
The result is that the commutation frequency of the spooling motors is adjusted so that an even higher speed is achieved.

In play mode the MS-PRESS signal disables the mono flop via the inputs 3/13. The resulting DC voltage GRPQ-CTL is 12 V which corresponds to a motor frequency of 35 Hz.

To prevent "singing" of the motor due to fast commutation of the phases, the spooling motor control has been equipped with the SPOOLING MOTOR FILTER 1.727.342 board.

In rewind mode the MS-REW signal trips the commutation IC7.
The tape tension sensor is now allocated to the right-hand (supply) motor, and the reference voltage from the MPU is allocated to the left-hand (take-up) motor.

The following functions are responsible for smooth changeover of the tape deck functions without creating tape loops:

- The comparator IC3/1 checks the position of the tape tension sensor and via transistor Q3 supplies the tape end signal (S-TAPOUT) when the tape tension sensor returns to the neutral position. (comparison with 3.7 V reference). At the same time the FET Q4 interrupts the control signal to the supplying motor.

- If the tape tension becomes too high (tape tension sensor fully deflected, i.e. the output voltage from the tape tension sensor approaches 0 V), the driving voltage over D11 is reduced to prevent a further increase in the tape tension.

- To prevent excessive tape tensions, particularly when the tape is accelerated, a starting aid is activated. In order to keep the output of IC1/1 always positive, this IC functions as a buffer (non-inverting amplifier when Q1 is high impedance), but it can also operate as an inverter (controlled by voltage level) when Q1 is conductive.

This changeover occurs when the tape tension is so high that the output voltage of IC1/2 changes to zero and the MS-DIR signal is high. In this case the sense of rotation of the supply motor is reversed via the capstan direction dependent commutator IC7. This means that during the brief start-up phase the supplying motor pushes the tape rather than back tensioning it which results in greater acceleration (start kick).

The MS-SHUTL signal activates the shuttle mode via the switch IC8. This switch connects the R-SHUTL2 voltage, tapped on the shuttle potentiometer, to the comparator IC10/2. If the output voltage on IC10/2 is zero, the tape tensions are the same as in play mode. The tape does not move. If the shuttle voltage on test point TP6 is positive, the right-hand motor is controlled with the M2-CTL voltage via the summing amplifier IC11/1, i.e. the tape moves to the right.
If the shuttle voltage is negative, IC11/2 controls the left-hand motor via the M1-L voltage so that the tape is transported to the left.

The TTA-SHT potentiometer can be aligned to prevent the tape from standing still in the neutral position of the shuttle wheel. A negative feedback circuit ensures that the spooling speed in shuttle mode is limited and kept constant. The pulses of the move sensor MS-MVCLK are taken from pin 12 to the mono flop (IC6) which in turn supplies constant width pulse that is integrated by C12 and IC9/2. The tape direction dependent MS-MVDIR signal connects the integrated signal either directly by means of IC8 or via the inverter IC10/1 and is thus added to the shuttle voltage.

3.1.6 Capstan motor control 1.727.336 (GRP 20)

The capstan motor is equipped with a capacitative tacho ring which is connected to pins 1 and 2 of the connector J3/EL3.
IC1 works as FM demodulator which is supplied by a 5.5 MHz oscillator (circuit with Q1). The frequency can be aligned with L2. Pins 5 and 6 are connected to the demodulator circuit that comprises coil L1 and the capacitative tacho ring. When the capstan motor rotates, the demodulator frequency changes in the rhythm of the rotation. This frequency is available on the AF output signal 8 as a sine-shaped signal that is amplified by IC3/2.
The output signal can be aligned to maximum amplitude on test point TP 2.
The frequency on test point TP 2 depends on the selected tape speed and is:

300 Hz at	3,75	ips	(9,5 cm/s)
600 Hz at	7,5	ips	(19 cm/s)
1200 Hz at	15	ips	(38 cm/s)
2400 Hz at	30	ips	(76 cm/s)

IC3/1 is wired as a Schmitt trigger and IC4/1 as an amplifier. When the tape speed is 3,75 ips the square-wave signal is taken directly to the output 13 of the analog switch IC14.

At the other three tape speeds the square-wave voltage is divided in the frequency divider IC13, and the switching IC14 selects the dividing ratio as a function of the speed in such a way that 300 Hz are always available at the output 13 when synchronism is achieved.
The correct dividing ratio is selected by IC12 which actuates the changeover switch by decoding the data line via the transistors Q16, Q17. The logic table above the switch contains information on the two control bits and the corresponding switch setting.

IC17 is a data register which is controlled via a serial data input (M3-DATA), a clock signal (M3-CLK), and a strobe signal (M3-EN). These control signals are converted from serial to parallel in the IC and buffered.

Since the original square-wave signals are available on the output 13 of IC14 only at 3 3/4 ips tape speed, R20 must be aligned to a symmetrical pulse/pause ratio (wow and flutter).
The tacho signal is now taken to the frequency-to-voltage converter. IC18 is a monoflop that is controlled with both signal edges so that the frequency is doubled. A pulse of approx. 16 s is available on output 6 and a pulse of approx. 42 s on output 9 which controls a sample/hold circuit.

- The longer pulse charges over the capacitor C47 via the transistor Q22.
- The shorter pulse short circuits the analog switch IC19/4 which transfers the current charge voltage of C47 to the hold capacitor C44. This capacitor retains its charge until the next sample is applied to switch 19/4 by the switch.

The sampled DC voltage is subsequently taken to the inverting input of the comparator IC16/1 which compares the ACTUAL tacho signal value with the reference.

The reference frequency can be either:
- the MPU clock frequency M3-9600 divided down to 960 Hz,
- or the output frequency M3-REFEX of an external varispeed remote control,
- or an internal varispeed frequency. The latter is generated in the VCO (voltage controlled oscillator) IC6 from the DC voltage tapped on the varispeed potentiometer RE1.

At 3 3/4 ips the transistor Q34 connected by the commutator IC14 limits the lower varispeed range to approx. minus 1.5 semitones (approx. 8%) at the summing input of 2/2.

The analog switch IC8 select the reference signal (9600 Hz for nominal speed) via the transistor Q2 on the frequency divider IC10 which divides the frequency by 16. As a result, the reference signal and the tacho signal after the mono flops IC11 and IC18 have the same frequency, i.e. 600 Hz for nominal speed.

The reference signal is now taken via the frequency-to-voltage converter Q3 and IC19/2 comprising the charging capacitor C35 and the holding capacitor C36 to the positive input of the comparator IC16/1.

When synchronism is achieved the sampled DC voltages on the outputs of IC17/1 (TP-9) and IC15/2 are approx. 7 V. When the tacho voltage and reference voltage are approximately within 5% of each other after the start or a speed changeover, the comparator IC22/1 responds and outputs a synchronism signal.

During the capstan start phase or extreme speed changes, control is principally performed by the frequency-to-voltage converter by comparing the reference frequency and the tacho frequency.

The phase comparison of the two frequencies compensates minor fluctuations in synchronous operation.

The phase comparison circuit consists of an integrator IC15/1 that is cyclically short-circuited by the reference signal via IC19/3. This results in a saw tooth signal. This circuit is followed by a differentiating element IC19/1 and C42 which is cyclically enabled by the tacho signal. Similar to the frequency-to-voltage converter this is a sample/hold circuit with C37 serving as the charging capacitor and C42 as the holding capacitor.
The correction signal which is proportional to the phase comparison is now available at the output of IC17/1 and is added to the positive input of the comparator IC16/1. The control voltage resulting from the frequency and phase comparison now passes through a passive integrator IC16/2 by follow of the summing amplifier IC20/1 to the pulse width modulator IC22/2.

IC21 converts the 76 kHz clock M3-C76k to needle pulses which via the transistor Q23 periodically discharge the capacitor C58 that has been charged by the current source C24. A saw tooth voltage is again generated.

The DC voltage from the summing amplifier IC20/1 determines the pulse duty factor which controls the switching regulator (Q25 to Q33) via the input transistor Q31. The operating voltage (+50.0 V) clocked by the power FETs (Q32 and Q33) is smoothed by the storage choke L3 and C56 and supplied to the capstan motor M3.
The capstan motor is a three-phase synchronous motor that features the same type of control as the spooling motors, i.e. one phase (M3-R, M3-T or M3-S) is connected via the corresponding transistor Q15, Q11 or Q7 respectively to the positive voltage of the switching regulator. A second phase is connected to

ground by one of the three transistors Q14, Q10 or Q6 while the third phase remains de-energized.

Three Hall elements built into the motor detect the magnet field of the rotor and signal it via the three amplifiers IC5/1, IC5/2, and IC4/2 to the PROM IC9 which cyclically controls the individual phases in accordance with the rotor control. The readout direction from the PROM is determined by the signal M3-DIR from the decoder IC12 (forward or reverse play).

The supply voltage for the three Hall elements is decoupled from the 5 V by the two diodes D1 and D2.
When a command is given to stop the capstan motor, the signal M3-STOP ensures by short-circuiting the input and output of IC16/1 with the transistors Q21 and Q18 that no control voltages reach the pulse width modulator IC22/2, while on the other hand at the input 13 of PROM IC19 the selection of the individual motor phases is prevented by the M3 STOP signal.

The speed-dependent signals selected by the microprocessor on the outputs 4 and 5 of IC12 control the two transistors Q19 and Q20. This results in a reference voltage on the inverting input 6 of IC20/2 which is compared with the voltage drop created on the measuring resistor R130. The output of IC20/2 is taken via the diode D10 to the summing amplifier IC20/1 and limits the starting current to the value specified by the microprocessor.
IC2/1 monitors the 5 V supply of the commutator IC9. If the 5 V are missing, IC2/1 reduces the control signal via diode D9 in such a way that no supply voltage for the capstan motor is produced.
To improve the linear wow and flutter at 38 or 76 cm/s respectively, the SPEED-B signal boosts the gain of IC16/1 by 6 dB via the transistors Q37 and Q36.

During the start phase, the uncharged capacitor C53 that determines the control voltage constitutes an interruption. For this reason transistor Q35 supplies the starting voltage until the signal M3-SYNC indicates that the capstan motor runs in synchronism with the specified reference frequency and that the capacitor C53 is now charged up to the control voltage.

3.1.7 Command panel

1.727.660...668 (GRP30)
1.727.760...766 (GRP30)

The command panel (COMMAND PANEL BOARD, GRP 30) processes the operator entries and indicates the states by means of various displays.

The displays are controlled by chips type SAA 1061 which also perform a latching faction. The chip control is implemented with the signals:

- DS-DATA: serial data with a leading 2-bit address
- DS-CLK: clock and
- DS-ENLED: enable function

Up to four SAA 1061 chips can be accessed with the leading 2-bit address; in the maximum system configuration three such chips are used in the tape deck itself and a fourth one in the console penthouse.

The keyboard is arranged as a matrix. In order to prevent continuous scanning of the keyboard by the CPU, the keyboard does not become active until a key has been pressed and consequently a bit of the line byte D0 ... D7 has changed. At this moment the CPU starts to scan the columns by means of QA through QH while simultaneously decoding the answer of the line byte. From this information it is possible to determine the exact key that has been pressed.

When the machine is powered on, the columns Q8 and Q9 are activated. As a result all default conditions set with the jumpers JP10 to JP17 will be scanned.

The VU-meters (if configured) are controlled by the precision rectifiers IC 2/1 and 2/2 as well as IC 6/1 and 6/2 respectively. The three LEDs per channel for indicating peak values at +6 dB, +9 dB, and +12 dB are driven by individual comparators. As is customary for peak indicators, the resetting time of all three LEDs is delayed by C13 (C23).

The assembly GRP31 (1.727.370) contains the 7-segment numeric displays. The following control signals are used:

DS	-	DATA
DS	-	CLK
DS	-	ENDPL

The two circuits IC1 and IC2 are responsible for converting the serial data so that four numeric displays can be controlled in multiplex mode.

3.2 Deinstalling the assemblies

Warning:

> Unplug the AC power cord before you remove any housing panels or before you remove any electrical assembly!

3.2.1 Headblock assembly

Soundhead cover

Unfasten two screws [A] (hexagon-socket-screw key size 3)

Headblock cover

Remove the headblock cover. Swing up the hinged headshield in front of the reproduce head.
Unfasten four screws [B] (hexagon-socket-screw key size 2.5)

Headblock

It is not necessary to remove the soundhead cover and the headblock cover in order to deinstall the headblock!

Important!

> In order to prevent inadmissible magnetization of the soundheads, the tape recorder MUST be switched OFF when you remove or install the headblock.

- Unscrew the pinch roller cover (hexagon-socket-screw key size 2.5).
- Unfasten the three screws (accessible through the holes [C] in the headblock cover) with the aid of a hexagon-socket-screw key size 3.
- Carefully lift off the headblock so that the capstan shaft will not become damaged.

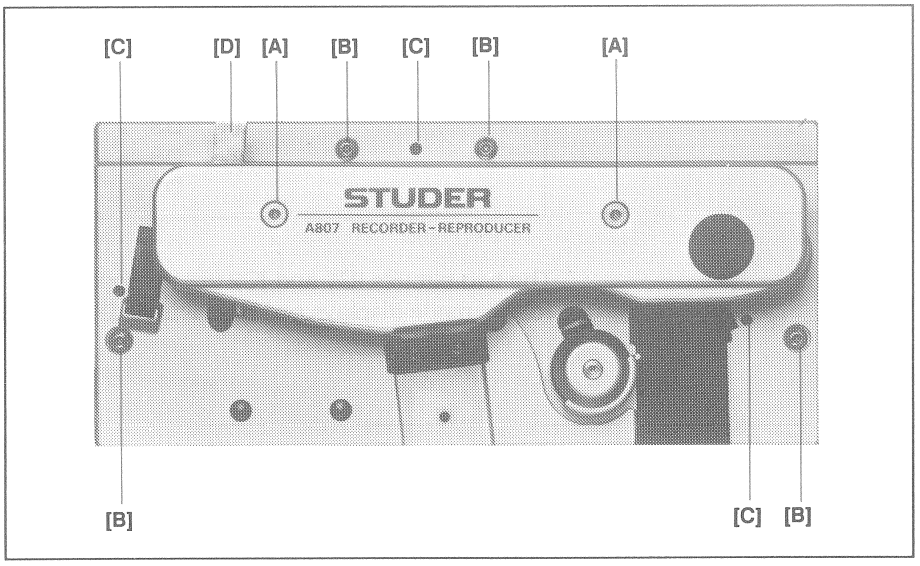

Fig. 3.2.1

3.2.2 Covers

Transport cover

- Remove the guide roller (small guide roller of the tape tension sensor) without any tool. The pinch roller can be removed with a screwdriver size 2.5.
- Remove the headblock cover (or headblock) (3.2.1).
- Unfasten seven screws (two of these are accessible through one hole each in the to slicing rails) with the aid of a hexagon-socket-screw key size 2.5.
- Lift off the cover.

Operating panel

- Turn the knobs (1 to 7, depending on recorder model) to the clockwise limit position and pull them off.
- Unfasten 4 screws (hexagon-socket-screw key size 2.5)
- Lift off the panel

Monitor panel

- Unfasten 2 screws (hexagon-socket-screw key size 2.5)

Ground panel

- Set the recorder in upright position.
- Unfasten seven screws (hexagon-socket-screw key size 2.5)
- When you reinstall the ground panel make sure that the position of the two serrated lock washers is correct: on the left and right-hand side in the middle.

End panel/power supply cover

- Turn the recorder in upright position.
- Remove the ground panel. Unfasten the mounting screws of the slide switch PHANTOM POWERING (if this option is installed) with the aid of a hexagon-socket-screw key size 2.
- Unfasten the screening plate below the MIC INPUT sockets (this plate is fastened with the same screws on the PHANTOM POWERING switch).
- Unfasten the XLR input sockets (MIC and LINE INPUT). One screw each is accessible through a fourth hole in the socket (without contact); approximately one 90° counterclockwise turn (screwdriver size 00) is required. Carefully push the inserts inward.
- Power inlet: Disconnect the stranded wire of the protecting ground (yellow/green) as well as the two stranded wires (brown and blue, in grey plastic tube) from the power inlet.
- Unfasten eight screws (hexagon-socket-screw key size 2.5).
- Also unfasten the ninth screw on the ground terminal while gripping the nut and the washer on the bottom.
- Slide the cover lightly backward.
- Unfasten the inserts of the XLR output connectors (LINE OUTPUT). The screw is well visible (same position as for the input sockets). Approximately one 90° counterclockwise turn (screwdriver size 00) is required. Carefully push the inserts inward.

- On reinstallation make sure that first the XLR output connectors (LINE OUTPUT) are installed with the cover in place but lightly shifted to the back. The cover can subsequently be screwed on and the remaining connectors can be mounted to this cover.
- On reinstallation make sure that the position of the two serrated lock washers is correct: on the left and right-hand side next to the connectors.

Wooden side panels

- Unfasten four screws each (hexagon-socket-screw key No. 4).

3.2.3 Tape deck electronics PCB 1.727.650 GRP10

The TAPE DECK ELECTRONICS PCB with its heat sink is located in the middle of the rear part of the recorder and extends across its full width. It can be swing out in order to gain better accessibility.

- Remove the ground panel
- At the right-hand and left-hand rear corner of this assembly there is one latch each (accessible through the cutouts in the heat sink contour). Press both latches inward and swing out the printed circuit.

Deinstallation:

- Separate all plug connections.
- Open or separate all cable ties that fix the cables against the inside of the frame.
- The pivots also consist of latches; these have to be released in order to deinstall the assembly.
- On reinstallation make sure that the latches are engaged in the corresponding recesses of the unit. The cable must be reattached to the frame by means of cable ties (Part No. 35.03.0109).

If repairs are necessary please return the circuit board together with its frame for replacement.

3.2.4 Amplifier module

		Order No.
AUDIO CONTROL PCB	RP 40	1.727.680.
AUDIO ELECTRONICS PCB (for all Versions)	GRP41/42	1.727.460 - 467
INSERT, e.g. MONO/STEREO SWITCH:		
INPUT PCB	GRP 44	1.727.441
OUTPUT PCB	GRP 45	1.727.442
ADJUSTMENT	GRP 46	1.727.443

A: Pulling out the amplifier module

- Remove the rear panel (see 3.2.2)
- The amplifier board is located below the TAPE DECK ELECTRONICS PCB and extends across the full width of the tape recorder. A latch is located at the lower right and lower left corner of the module. Press in both latches so that the module can be pulled back to the rear stop position.
- Separate all plug connections
- The stop consists of two additional latches.

B: Removing the AUDIO ELECTRONICS PCB

- Unfasten all plug connections on both AUDIO ELECTRONICS PCBs.
- The retaining brackets for the AUDIO ELECTRONICS PCB unfasten with a hexagon-socket-screw key size 2.5.
- To remove the PCB channel 1 GRP 41 (located closer to the front panel) the retaining bar of the INSERT PCB(s) (if configured) must first be unfastened, otherwise its removal will be obstructed by the heat sink.
- One nut pin each is pressed into the upper left and right corner of the AUDIO ELECTRONICS PCB. Lift the circuit board simultaneously on both pins by means of a suitable tool (screwdriver). To prevent damage, utmost care is necessary because of the numerous plug contacts.

C: Removing the INSERT PCBs (if configured)

- These modules (e.g. MONO/STEREO switch) which can be switched on and off by means of the INSERT key on the front panel are located on the AUDIO CONTROL PCB 1.727.680 between the two AUDIO ELECTRONICS PCBs 1.727.460.
- Separate all plug connections on the rear AUDIO ELECTRONICS PCB and on the INSERT PCB.
- Unfasten two screws each to the left and the right of the mounting rail and carefully lift the assembly.
- In order to remove the INSERT PCB we recommend that you remove the AUDIO ELECTRONICS PCB GRP 42 (channel 2) located closer to the rear panel. This provides better access to the INSERT PCB.

D: Removing the amplifier module

- Remove the AUDIO ELECTRONICS PCBs and the INSERT PCBs (see above).
- Unfasten the plug connection on the narrow side of the AUDIO CONTROL PCB 1.727.680.
- The two latches that form the stop of the drawer mechanism can now be released one at the time.

E: Installing the amplifier module

- The installation is performed in the reverse order. When you plug in the connecting cables make sure that the connector assignment is correct (labelling on the connectors, numbering from left to right, viewed from the rear toward the recorder:

EL 1, EL 2b, EL 2A, EL 3...EL 7

GRP 41 = channel 1, front (front panel) GRP 42 = channel 2, rear

- On reinstallation also make sure that the latches engage in the corresponding guide rails.

3.2.5 Command

	COMMAND PANEL PCB GRP 30	(Versions) 1.727.660 - 668
	COMMAND PANEL PCB GRP 30	(Versions) 1.727.760 - 766
	DISPLAY PCB GRP 31	1.727.370.00

COMMAND PANEL

The COMMAND PANEL PCB is inserted into the recorder from top and is fixed by the command panel. In order to remove this board proceed as follows:

- Set the recorder upright
- Remove the rear panel, swing out the TAPE DECK ELECTRONICS PCB.
- Unplug the 3-pin connector (brown/red/orange connector labelled "GRP 11, EL 06") on the SPOOLING MOTOR CONTROL PCBs above the pinch solenoid.
- Remove the operating panel (see 3.2.2).
- Unplug the VU-meter connections, if existing (brown stranded wire).
- Pull the assembly slightly toward the front, separate the multiple plug connection, and carefully pull the connecting cable (brown/red/orange) from the SHUTTLE potentiometer to the SPOOLING MOTOR CONTROL PCB through the slot toward the front.

SHUTTLE UNIT:

- Unfasten 2 screws on the front of the push button unit (hexagon-socket-screw key size 2.5).
- Carefully pull out the SHUTTLE UNIT toward the back.

DISPLAY PCB:

- Carefully pull the PCB out of the socket. Make sure that the pins are not bent.

Narrow key housing:

- Squeeze the clips (on the solder side) and simultaneously pull the key housing from the component side toward the circuit board in order to cancel the mechanical pretension. The key housing can be lifted off after all clips have been released.
- Considerable pressure is required for reinstalling the housing. For correct engagement of the clips some assistance with a screwdriver may be necessary. Make sure that all clips are engaged properly.

Wide key housing (with large tape command keys)

- Release the four clips on the solder side. Lift off the key housing.

VU-meters, lamps for VU-meter illumination

- Unplug the stranded red (left) and black (right) connecting wires. Release the two clips on the solder side. Remove the measuring instrument.
- The bulbs (6 V, 30 mA, glass socket T 1½) are located in the sockets below the measuring instrument.

Pilot LEDs

- All LEDs on the COMMAND PANEL PCB are of the plug-in type. The cathodes of the LEDs always point either toward the right or the top.

Switching mats

- The rubber contact mats can be lifted over the LED sockets after the key housings and the LEDs have been removed.
- On reinstallation make sure that the protrusions on the underside of the contact mat engage in the corresponding holes of the COMMAND PANEL PCB.

3.2.6 Tape lifter

(The explanations are enhanced by the illustration on Fig. 3.2.2. The number in brackets refer to the information in this illustration).

Tape lifter assembly:

- Set the tape recorder in horizontal position.
- Remove the headblock (3.2.1).
- Remove the transport cover (3.2.2)
- Unscrew the monitor speaker, if configured (1 x IS screwdriver size 2, 1 x size 2.5). Do not detach the connecting cable (no plug connection).
- Remove the circlip of the driving pin [4.3].
- Unhook the tension spring of the latch on the pin of the pinch roller arm, unhook the tension rod on the left-hand tape lift lever.
- Unfasten 2 screws [2.18] (hexagon-socket-screw key size 2.5)
- Remove the tape lifter assembly while simultaneously released the plastic clips from the pin of the pinch roller arm.
- On reinstallation make sure that first the plastic clips and then the tension spring of the latch are hooked into the pin of the pinch roller arm; subsequently engage the tension rod of the latch in the left-hand tape lift lever.

Tape lift solenoid:

- Remove the circlip of the driving lever [4.3], remove the driving lever.
- Unfasten 2 screws [5.6] (hexagon-socket-screw key size 3)
- Carefully remove the solenoid toward the front. Do NOT tilt it, otherwise the armature drops out.
- Unplug the stranded connecting wires (grey, violet) at the solenoid.
- On reinstallation make sure that the polarity is correct! (violet = +).

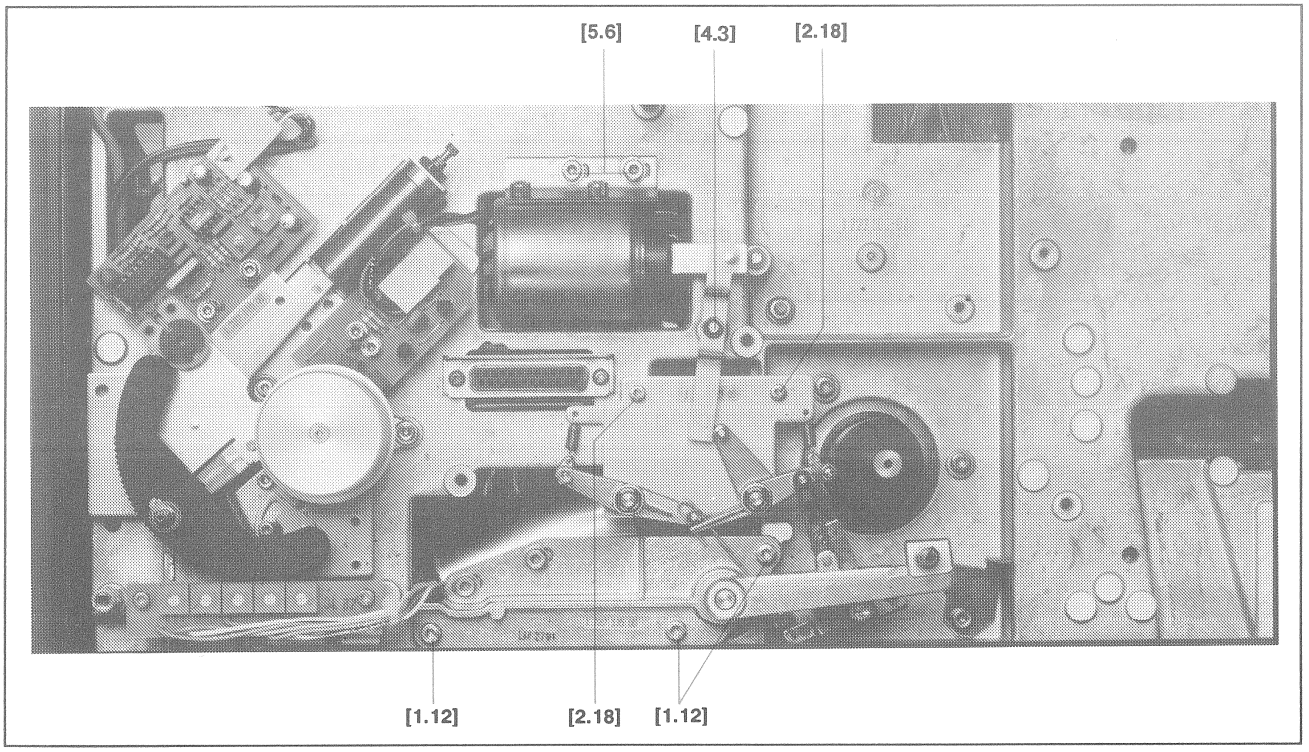

Fig. 3.2.2

3.2.7 Pinch roller assembly

- Set the record in the upright position.
- Remove the headblock (3.2.1)
- Remove the transport cover and the ground panel (3.2.2).
- Unscrew the monitor speaker, if configured (1 x hexagon-socket-screw size 2, 1 x size 2.5). Do not detach the connecting cable (no plug connection).
- Remove the circlip of the drive lever [4.3].
- Remove the tape lifter (3.2.6)
- Unplug the stranded wires (grey, violet) from the solenoid.
- Unfasten 3 screws [1.12] (hexagon-socket-screw key size 3).
- Carefully remove the pinch roller assembly toward the front and observe the positioning of the tension lever.
- On reinstallation make sure that the polarity of the connections is correct! (violet = +").

3.2.8 Tape tension and move sensor TAPE TENSION SENSOR PCB 1.727.320 (GRP 13) TAPE MOVE SENSOR PCB 1.727.321 (GRP 24)

- Remove the transport cover (3.2.2)
- Unplug one connecting cable each on the TAPE TENSION SENSOR PCB and on the TAPE MOVE SENSOR PCB.
- Unfasten 3 screws (only the one without locking paint!) (hexagon-socket screw key size 2.5)
- Lift off the assembly.

3.2.9 Tape brakes

- Set the recorder in upright position.
- Remove the ground panel (3.2.2)
- Unplug the 2 stranded wires (brown, violet) of the brake solenoid.
- Restore the recorder to its normal position.
- Remove the transport cover (3.2.2).
- Remove the spindles (3 screws each, hexagon-socket-screw key size 2.5).
- Unfasten 3 screws [1.1] (hexagon-socket-screw key size 2.5).
- Unplug the connecting cable.

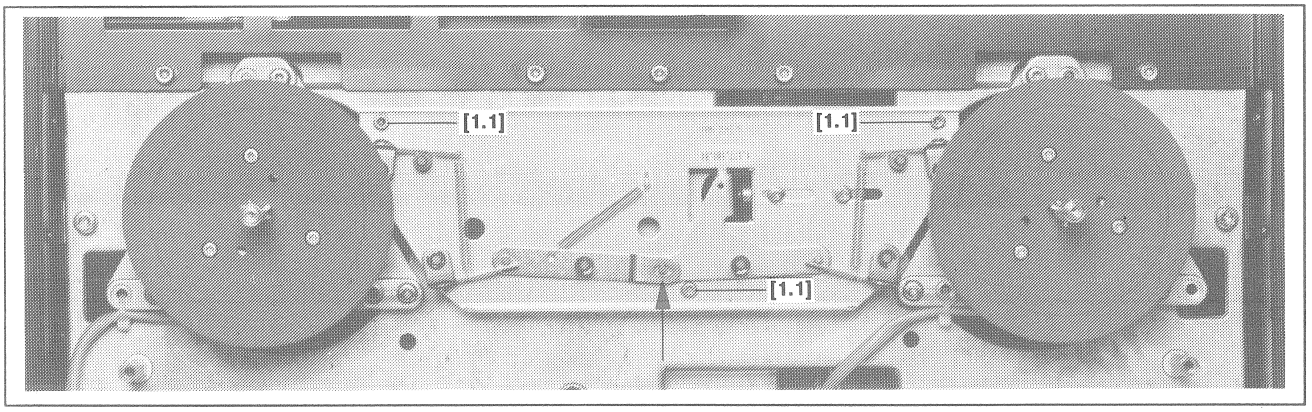

Fig. 3.2.3

- Apply light pressure to the movable connection of the two brake levers from the front to disengage the brakes sufficiently so that the brake chassis can be carefully lifted off.
  The brake bands should be neither kinked nor touched on the inside with ungloved heads! Kinked brake bands should be replaced. If they are contaminated they can be cleaned with ethanol (95%).
- On reinstallation make sure that the polarity of the connections is correct! (violet = +).

3.2.10 Spooling motors

- Set the recorder to the upright position.
- Remove the ground panel (3.2.2).
- Swing down the TAPE DECK ELECTRONICS PCB (3.2.3).
- Separate the plug connections of the spooling motor feeder lines on the SPOOLING MOTOR FILTER PCB. This circuit board is located in the right-hand half of the unit below the spooling motor (viewed from the back).
- The CAPSTAN MOTOR PCB 1.727.330 GRP 20 (3.2.14) should be removed before you remove the take-up motor (on the left, viewed from the rear).
- The SPOOLING MOTOR CONTROL PCB 1.727.340 GRP 11 (3.2.11) should be removed before you remove the supply motor .
- Guide out the motor feeder lines through the chassis toward the front.
- Swing up the TAPE DECK ELECTRONICS PCB and lock it.
- Restore the recorder to the normal position.
- Remove the spindles (3 screws each, hexagon-socket-screw key size 2.5).
- Remove the brake chassis (3.2.9). After reinstallation the brakes must be readjusted (see 3.3.2). Do not touch the brake lining (reddish fabric) with ungloved hands!
- Unfasten three screws on each spooling motor, screwdriver size 3.
- Lift out the spooling motor toward the top.
- On reinstallation make sure that neither the ring gear nor the light barrier into which the former engages, become damaged.

3.2.11 Spooling motor control 1.727.340 (GRP 11)

- Set the recorder in the upright position.
- Remove the ground panel (3.2.2).
- Swing down the TAPE DECK ELECTRONICS PCB (3.2.3).
- Pull out the amplifier module to the stop position (3.2.4).
- Separate the plug connections of the spooling motor feeder lines on the SPOOLING MOTOR FILTER PCB. This circuit board is located in the right-hand half of the unit below the spooling motor (viewed from the rear).
- Separate all plug connections on the SPOOLING MOTOR PCB.
- Unfasten 4 screws. The lower 3 screws can be unfastened by inserting the screwdriver between the lowered TAPE DECK ELECTRONICS PCB and the pulled out amplifier module.
- Pull out the SPOOLING MOTOR CONTROL PCB.
- On reinstallation make sure that the serrated washer is placed below the right-hand, upper fixing screw (ground connection). Also make sure that the polarity of the supply voltage feeder line is correct: the plus marking on the circuit board corresponds to the red positive line. Also make sure that the position of the insulated cover is correct: no connecting cables should be routed between the insulating cover and the circuit board.

3.2.12 Spooling motor filter PCB 1.737.342 (GRP 12)

This subassembly is plugged into the SPOOLING MOTOR CONTROL PCB and fixed with 2 screws (hexagon-socket-screw key size 2.5). It should be unplugged after the SPOOLING MOTOR CONTROL PCB has been removed.

3.2.13 Spooling Motor Tacho left PCB 2 CH 1.727.317 (GRP 17)
Spooling Motor Tacho right PCB 2 CH 1.727.318 (GRP 18)

(4-channel version 1.727.315./316.)

The infrared light barriers on the SPOOLING MOTOR TACHO PCBs scan the ring gear on the spooling motor. 64 pulses are generated for each revolution.

For field repairs we recommend that only the fixing screws are unfastened and the circuit board with its cable harness should be left inside the unit.

- Unfasten 2 screws (hexagon-socket-screw key size 2.5).
- For complete removal of the left-hand SPOOLING MOTOR TACHO PCB it is necessary to remove the CAPSTAN MOTOR CONTROL PCB and the SPOOLING MOTOR CONTROL PCB (3.2.11 and 3.2.14).
- For complete removal of the right-hand SPOOLING MOTOR TACHO PCB it is necessary to remove the SPOOLING MOTOR CONTROL PCB (3.2.11).
- Unplug the connecting cables (yellow/green/black) on the SPOOLING MOTOR CONTROL PCB 1.727.340 GRP 11 and unthread the cable.

3.2.14 Capstan motor

- Set the recorder in the upright position.
- Remove the headblock (3.2.1).
- Remove the transport cover and the ground panel (3.2.2).
- Disengage all latches of the TAPE DECK ELECTRONICS PCB 1.727.350 GRP 10 and slide the circuit board to the back and down as far as the cable connections allow it.
- Separate the cable connections of the capstan motor control feeder lines on the CAPSTAN MOTOR CONTROL PCB.
- From the front unfasten three fixing screws of the capstan motor (hexagon-socket-screw key size 3) while supporting the motor on the back. When removing the motor toward the back and the reinstalling the motor proceed carefully to prevent any damage to the capstan shaft.

3.2.15 Capstan motor control PCB 1.727.330 (GRP 20)

- Set the recorder in the upright position.
- Remove the bottom plate (3.2.2).
- Swing out the TAPE DECK ELECTRONICS PCB toward the back.
- The CAPSTAN MOTOR CONTROL PCB is located to the left and above the capstan motor (viewed from the back of the recorder).
- Unplug all connecting cables, unfasten 4 screws (hexagon-socket-screw key size 2.5).
- On reinstallation make sure that a serrated washer is inserted under each of the four fixing screws (ground connection). Also make sure that the polarity of the feeder lines is correct: the plus marking on the circuit board corresponds to the red positive line. Also make sure that the position of the insulated cover is correct: no connecting cables should be routed between the insulating cover and the circuit board.

3.2.16 Power transformer 1.727.692 (GRP02 - 06)

- Set the recorder in the upright position.
- Remove the bottom plate (3.2.2)
- Remove the connection panel (3.2.2)
- Unplug the multiple connector of the RECTIFIER PCB 1.727.691 GRP6 on the right-hand face (viewed from the back of the recorder).
- Unfasten the RECTIFIER PCB and turn it to the left.
- Remove four shock protection tabs from the transformer terminals.
- Unplug the cable connections leading from the transformer to the voltage selector; sequence from left to right:

brown, red, orange, yellow, green, blue, violet, grey.

- Unfasten the 4 fixing screws of the power transformer.
- Lift out the power transformer.

Power transformer for repair, please send only the transformer 1.727.305.00 without the bottom plate.

3.3 Mechanical alignment

Prior to mechanical alignments please check whether all connectors are correctly inserted and properly seated.

Check supply voltage and switch on.

3.3.1 Brake maintenance

Brakes which lack appropriate checking and alignment can cause damage to tapes. Please check frequently if braking is smooth and constant and if there are no tape loops even with very different spool diameters.

Brakes and brake bands have to be clean and free of grease. Cleaning can be performed with ethanol (95%). Please take care that brakes or brake bands are not touched with fingers after having been cleaned.

Brake bands must not be kinked and should touch the brakes on their full width.

3.3.2 Brake adjustment

Height of brakebands

When turning the reel flanges the brake bands must always be in the middle of the brake lining.

Brake chassis alignment

The brake bands are supported by a common chassis, the brake chassis.

By pulling the brake chassis in direction to the rear of the unit it can be aligned in such a way that the brake levers [3] have a clearance of approx. 1mm to the lifting pin [2] when braked. If a clearance of 1 mm is not adjustable the front brake lever has to be gently bent.

By shifting the brake chassis parallel to the front edge of the unit lifting of both pins can be adjusted to be equal.

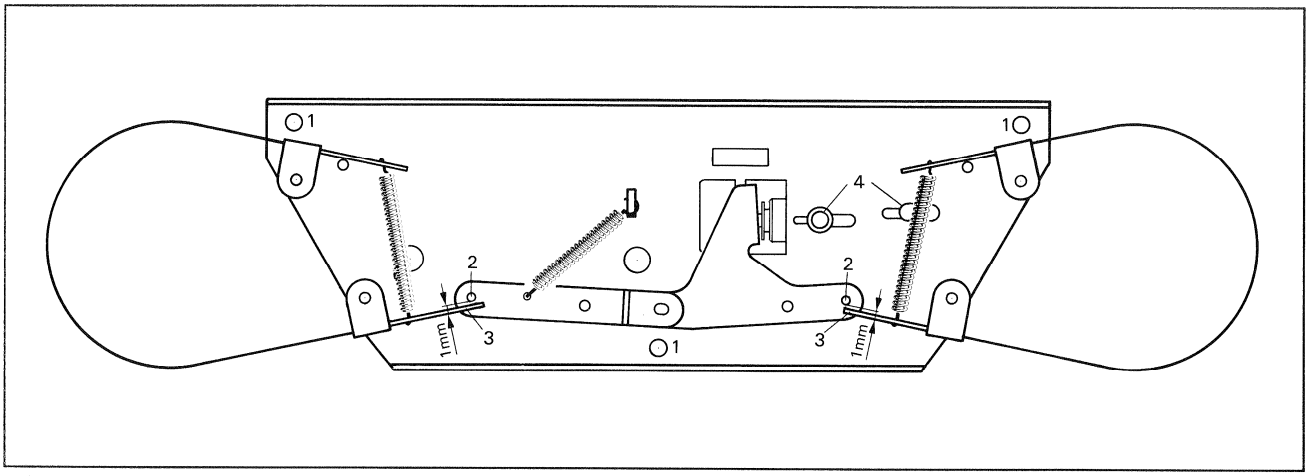

Fig. 3.2.4

Brake solenoid adjustment

Move the tape tension sensor out of its idle position and press the "SHUTTLE" key.

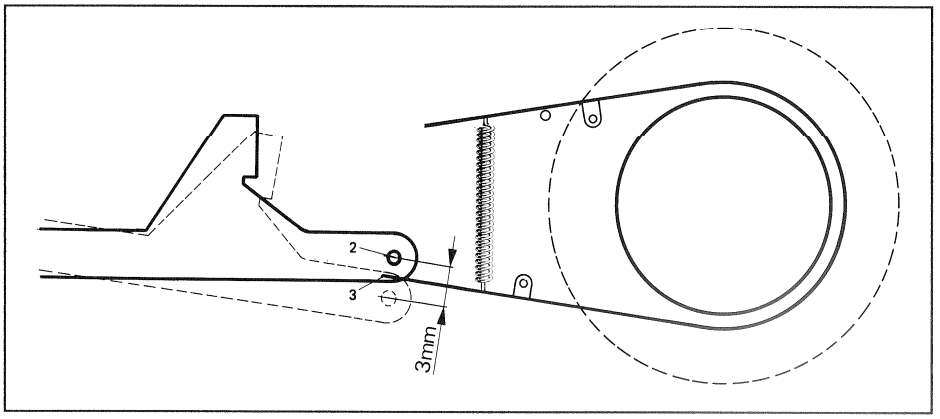

Fig. 3.2.5

The brake will open; the lifting pin will travel 2 to 3 mm out of its rest position (see figure). The brake bands must not touch the brake drum when the reel flange is turned. Adjust by shifting the solenoid; tighten the screws [4] again firmly.
After alignment a measurement of the brake torque is advisable (see figure).

Checking the brake torque

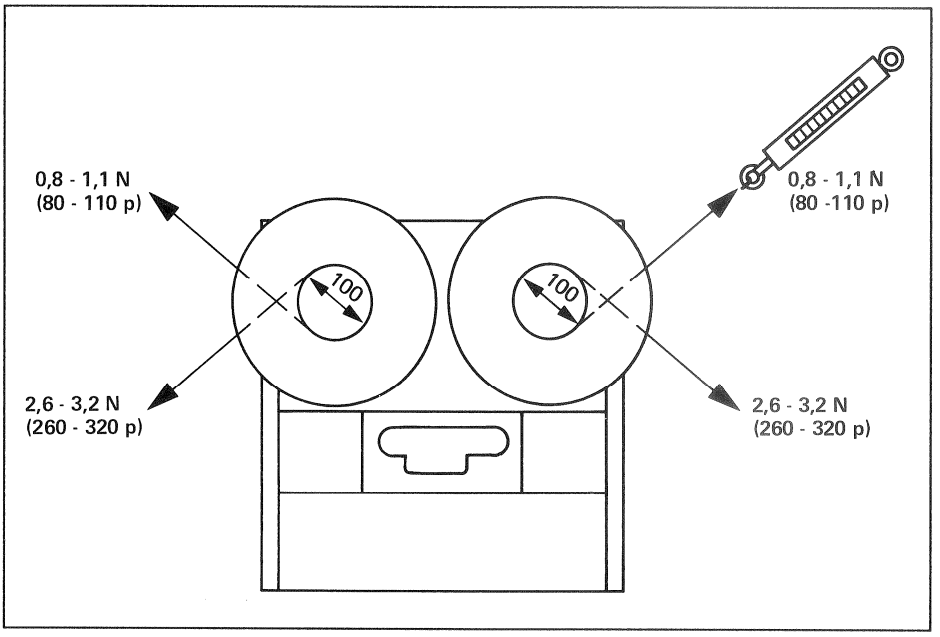

Fig. 3.2.6

Are the obtained results different from the data in the figure and you are sure that the brakes and brake bands are absolutely clean, try to hook the springs at a different position.

3.3.3 Pinch force adjustment

- Deflect the tape tension sensor out of the neutral position and press the pinch roller arm lightly against the capstan shaft until the roller just starts to rotate.
- Press the TAPE DUMP key (if correspondingly programmed together with PLAY). The pinch roller arm should now move visibly against the capstan shaft. This indicates that the pinch roller solenoid is fully energized so that only the tension spring provides effective coupling of the pinch roller arm with the solenoid plunger.

- By pressing the STOP and TAPE DUMP keys several times, check that this process is repeatedly accomplished.

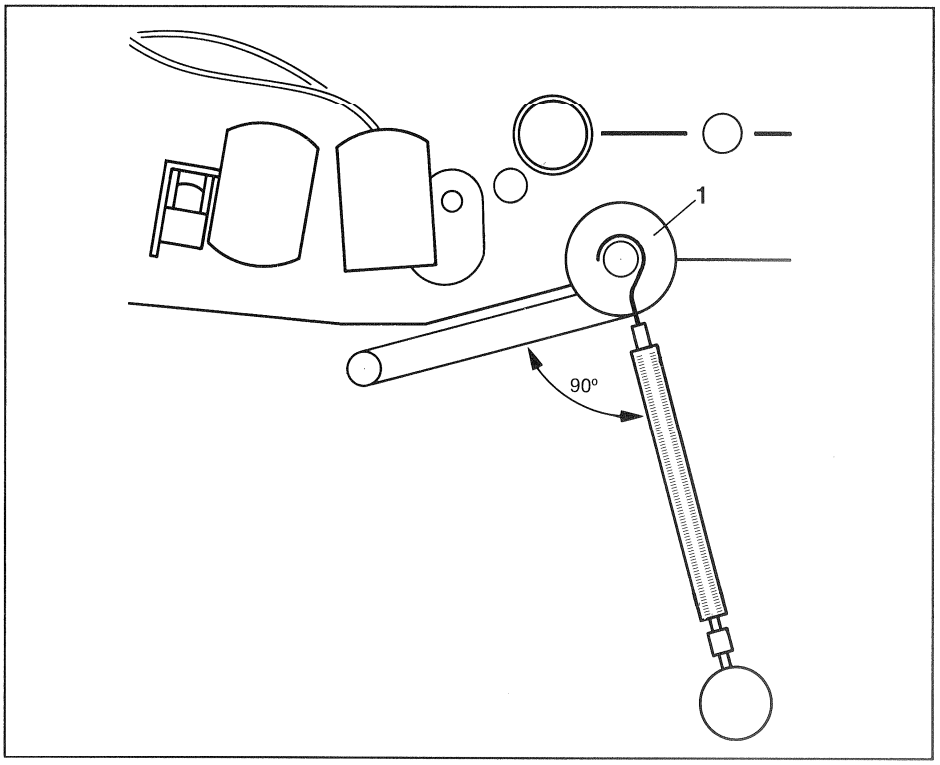

Fig. 3.2.7

If this is not the case, unfasten the 3 fixing screws (hexagon-socket-head 3 mm) and slightly shift the pinch roller solenoid.
After the adjustment has been made, check that the pinch roller arm returns to the neutral position without binding.

Checking the pinch force

- Remove the pinch roller cover (hexagon-socket-screw key 2.5 mm) and reinsert the fixing screw into the shaft.
- Deflect the tape tension sensor from the neutral position. Press TAPE DUMP (if correspondingly programmed together with PLAY).
- Hook a spring dynamometer into the screw and pull perpendicularly to the pinch roller arm until the pinch roller lifts off the capstan.

The spring dynamometer should indicate 8 - 10 N (800 - 1000 pond).

3.3.4 Head adjustment check

Check the headblock on a levelling plate or on a flat glass plate. Height and perpendicularity may be tested by means of the gauge order no. 10.010.001.02 and the reference block order no. 10.010.001.01.

When fixing the head block again push the headblock completely towards the rear of the unit while tightening the fixing screws.

Be absolutely sure to have power off during removing or installation of the headblock (danger of magnetizing the heads).

3.3.4 Head adjustment check

Check the headblock on a levelling plate or on a flat glass plate. Height and perpendicularity may be tested by means of the gauge order no. 10.010.001.02 and the reference block order no. 10.010.001.01.

When fixing the head block again push the headblock completely towards the rear of the unit while tightening the fixing screws.

Be absolutely sure to have power off during removing or installation of the headblock (danger of magnetizing the heads).

3.3.5 Tape lift solenoid

- Switch power on and load a tape. Press a wind key.
- Loosen the two lower screws of the tape lift solenoid and adjust that the tape is lifted 2mm off the heads but without touching the raised headshield.
- Check that the aramature moves freely in the solenoid. The internal monitor speaker must be dismounted for that check. After alignment tighten screws again firmly.
- Reinstall the speaker.

3.3.6 Static tape tension adjustments

Spooling motor control

- At first put machine in upright position.
- Load a well filled tape reel (Ø 10.5") and wind to approx. middle position. Connect Voltmeter to TP 5 (+) and TP 2 (ground) on the SPOOLING MOTOR CONTROL PCB 1.727.340 (GRP 11).
- Hold the right tape pancake with your hand and switch the machine to FAST FORWARD.
- Adjust 10.0 Volt DC by means of R 35 on this board.
- Stop the machine.

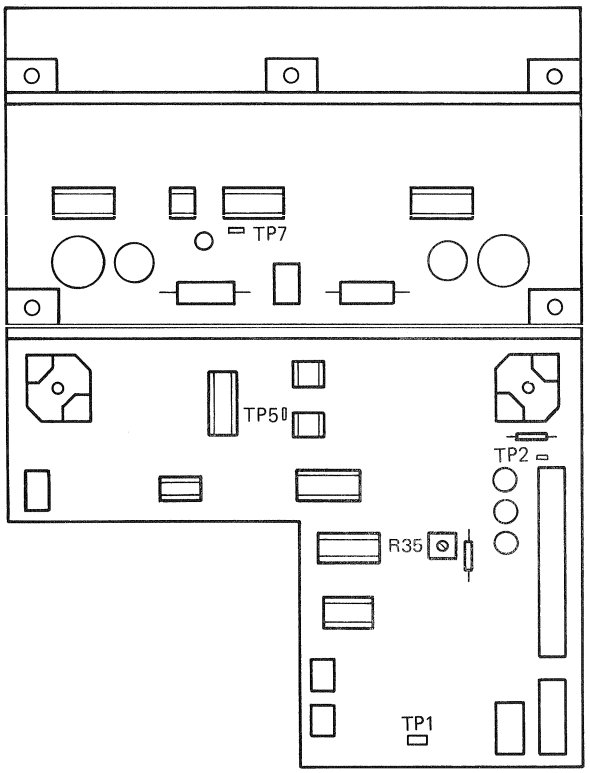

Fig. 3.2.8 Spooling motor control PCB 1.727.340

Tape tension sensor

- Then put machine to the horizontal position.
- Connect voltmeter to TP 1 (+) and TP 2 (ground) on the TAPE TENSION SENSOR PCB 1.727.320 (GRP 13).
- Press tape tension sensor to the rear until distance "X" (see figure next page) is 85mm. With the upper trimmer pot R 16 adjust to 0.0V; with the tape tension sensor released to the rest position (approx. distance of "X" = 46mm) adjust +4.0V by means of the lower trimmer pot R 11.
  The allowed tolerance is ± 0.05V.
- Recheck both readings and correct, if necessary.

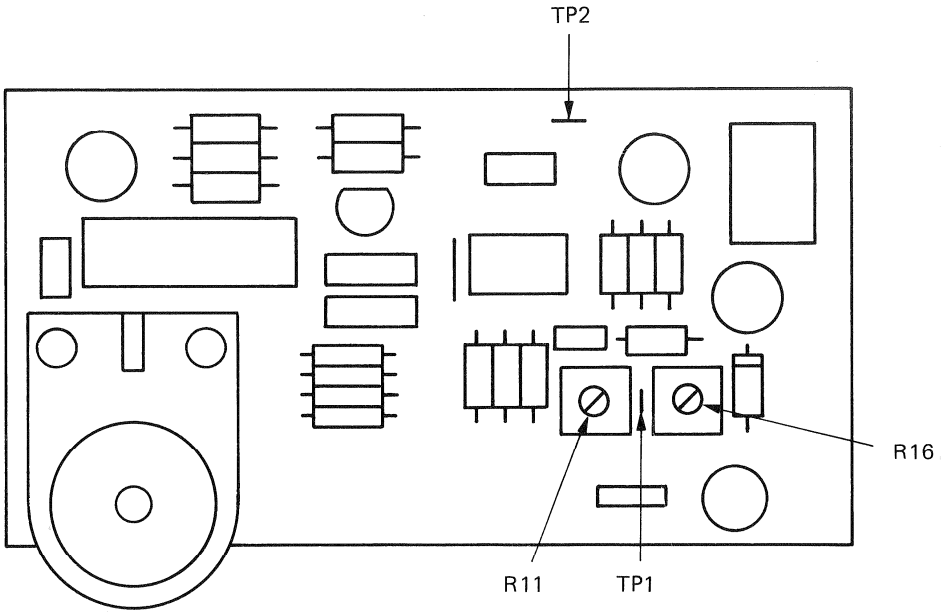

Fig. 3.2.9 Tape tension sensor PCB 1.727.320

3.3.7 Tape tension

Load tape (100 mm hub) and spool up to the middle.
Unscrew left splicing block. The potentiometers for the tape tension adjustment will become accesible.
Adjust the following values:

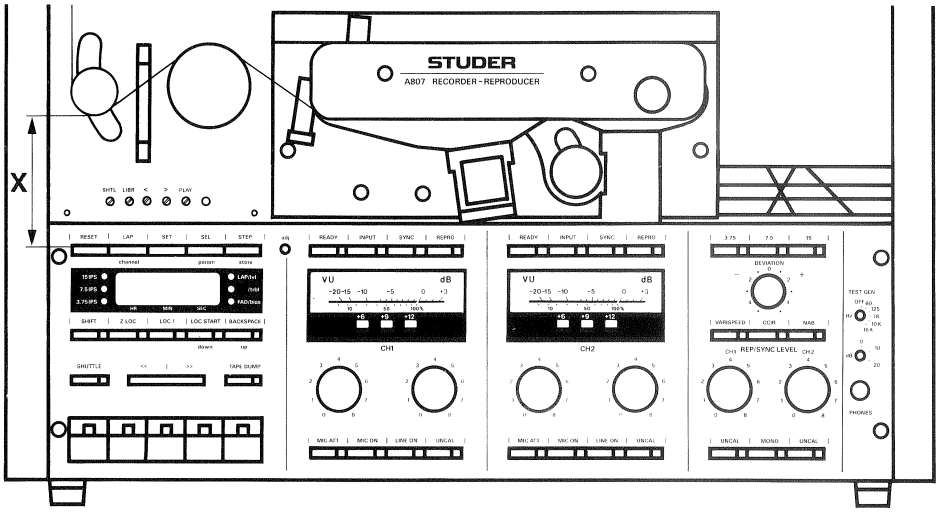

Fig. 3.2.10

PLAY:

- Insert a tape tension meter between the left reel and the tape tension sensor. Press the key PLAY. By means of the trimmer "Play" adjust to 70 p ± 2 p; the distance "X" should be in the range of 56 to 58 mm.

WIND:

- Press the key WIND. Adjust "X" equal to 57 mm by means of the trimmer "Wind".

REWIND:

- Press the key REWIND. Adjust "X" equal to 67 mm by means of the trimmer "Rewind".

LIBRARY WIND:

- Set this mode by pressing SHIFT and REWIND together. Adjust for best pancake with your preferred brand by means of the trimmer "Libr". Factory setting is "X" equal to 65 mm .

SHUTTLE:

Press the key SHUTTLE. Adjust so that the tape does not move. After a slight kick of the right hand spool in either direction the tape should come evenly to stop both ways.

3.3.8 Lifting Pin

During spooling adjust the height of the two lifting pins thus the tape would not move up or down when the tape is lifted off the heads.

3.3.9 Capstan motor control

- Connect Frequence counter to TP 1 (0 V to TP 4) on the CAPSTAN MOTOR CONTROL PCB 1.727.330 (GRP 20).
- Adjust the frequency to 5.5 MHz (± 200 kHz) by means of L 2.
- Switch the machine to 7.5 ips and press PLAY. Connect Oscilloscope or 600 Hz Multimeter (AC range) to TP 2 (0 V to TP 4). Adjust maximum reading by means of L 1 (approx. 2 Volt RMS)

If you have a Wow and Flutter Meter, adjust flutter minimum by means of R 20 (Switch machine to 3 3/4 ips).

Alternatively (if no W+F Meter is available):

a) Connect oscilloscope to TP 5 (0 V to TP 4). Select AC range. Adjust to minimal jitter by means of R 20.

b) Listen with a big screwdriver or a stethoscope to the capstan motor. The screwdriver blade should be pressed to the motor housing, the wood shaft to the ear. Try to minimize the mechanical noise by means of R 20.

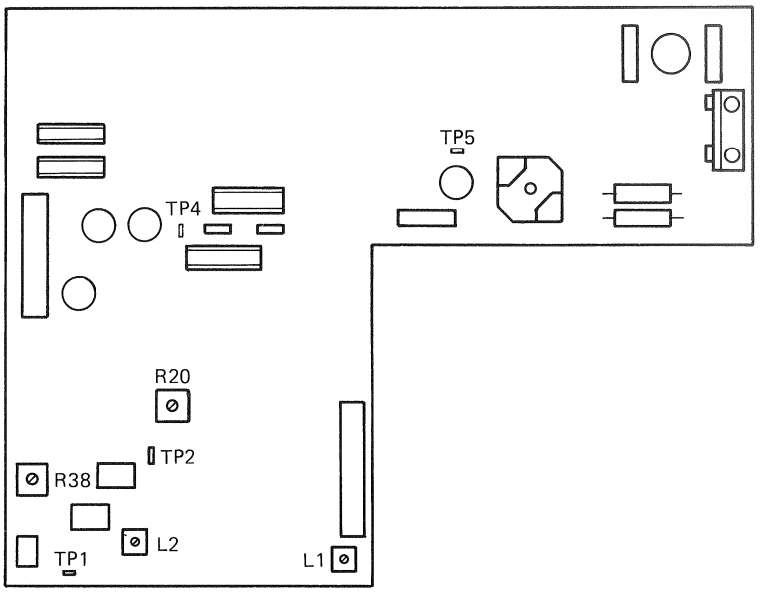

Fig. 3.2.11

3.3.10 Varispeed circuit

- Connect Frequence counter to TP 2 (0 V to TP 4) on the CAPSTAN MOTOR CONTROL PCB 1.727.330 (GRP 20).
- Knob "DEVIATION" to 0; Switch Varispeed on, machine to 15 ips.
- Adjust frequency by means of R 38 to 1200 Hz.

3.3.11 Transparent tape sensor

- Connect DC voltmeter to TP 10 (0 V to TP 4) on TAPEDECK ELECTRONICS PCB 1.727.650 (GRP 10).
- If there is no tape or clear tape in the sensor gap, the voltage at TP 10 should be approx. 5.6 V; with tape approx. 0 V.
- Adjustment by R 73.

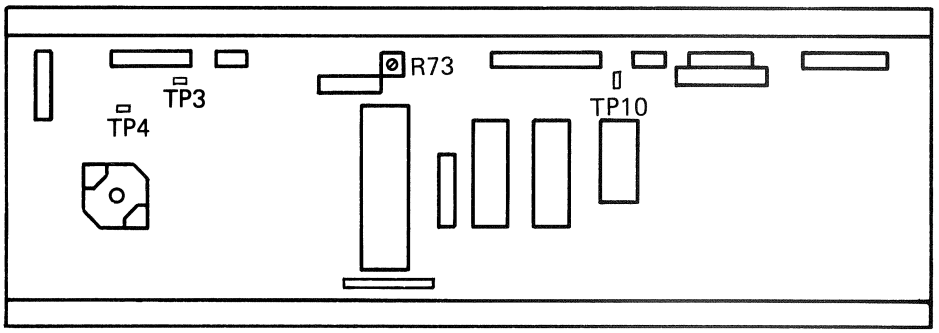

Fig. 3.2.12

4 Audio

4.1 Circuit description 1
4.1.1 Introduction 1
4.1.2 Level diagram 2
4.1.3 Input amplifier 5
4.1.4 Record amplifier 5
4.1.5 Reproduce amplifier 6
4.1.6 Line amplifier 7
4.1.7 Monitor (standard version) 7
4.1.8 Stereo monitor (special version) 8
4.1.9 Mono switch and test generator (option) 8
4.1.10 Control logic (AUDIO CONTROL BOARD, GR 40) 9
4.1.11 Preparation of the erase and bias signals 10
4.1.12 Audio control board 10

4.2 Calibration 16
4.2.1 Introduction 16
4.2.2 Level definition 17
4.2.3 Equalizations 18
4.2.4 Magnetic reference flux, standard calibration data 19
4.2.5 Calibration tapes 20
4.2.6 Input keyboard 23
4.2.7 Audio receiver layout 25
4.2.8 Matching the internal level to the operating level 26
4.2.9 VU-meters 27
4.2.10 LED peak indicator 28

4.3 PLAYBACK ONLY tape players 29
4.3.1 Level adjustments if the desired tape flux corresponds to the reference tape flux 29
4.3.2 VU and peak meter adjustment for playback only 30
4.3.3 Adjusting the level when the desired tape flux does not correspond to the one on the reference tape 31

4.4 Reproduce alignment 34
4.4.1 Preparation 34
4.4.2 Azimuth alignment 36
4.4.3 Reproduce treble adjustment 37

4.5 Record alignment 38
4.5.1 Adjusting the erase current 38
4.5.2 Adjusting the bias trap 38
4.5.3 Record audio alignments 39
4.5.4 Record preadjustment 40
4.5.5 Aligning the azimuth of the record head 40
4.5.6 Bias adjustment 41
4.5.7 Azimuth alignment STEREO 41
4.5.8 Record level adjustment 42
4.5.9 Frequency response alignment 42
4.5.10 Adjusting the cross talk on 2-channel stereo machines 43
4.5.11 Adjusting the cross talk on 4-channel machine 44

4.6 Sync alignments 45
4.6.1 Preparations 45
4.6.2 Sync reproduce level adjustment 45
4.6.3 Sync frequency response alignment 46

4.7. Time code alignments electrical 47
4.7.1 TC reproduce 47
4.7.2 Time code recording 49
4.7.3 Bias alignment 50
4.7.4 Aligning the record level 52

4.8 Checking the gap position of the TC head 53
4.8.1 Adjustment of head gap position: reproduction 53
4.8.2 Adjustment of head gap position: record 54
4.8.3 Checking the time code reproduction in spooling mode 54

4.9 Mechanical adjustment of the time code head 55
4.9.1 Mechanical home position 55
4.9.2 Checking the height of the head 56
4.9.3 Checking the tape lifter adjustment 58

4.10 Mono/stereo selector settings 59
4.10.1 Preparations 59
4.10.2 Mono reproduce level adjustment 61
4.10.3 Mono record level adjustment 63

4.11 Bias adjustment parameters 64

4.1 Circuit description

Note: Information concerning the design of the audio electronics can be found in 4.1.1 Introduction; the basic function is subsequently described with the aid of level diagrams (4.1.2 a and b). Information concerning the functional details, as well as the alignment and programming instructions, can be found beginning with Section 4.1.3.

4.1.1 Introduction

The complete audio electronics are implemented on a pull-out chassis. It comprises the:

- AUDIO CONTROL BOARD, GR 40 which contains the control electronics as well as the connectors for the channel boards,
- Channel boards (AUDIO ELECTRONICS BOARD, GR 41/42).

Each of these channel boards (up to four) contains the record, reproduce, and sync amplifier, depending on the model. The audio electronics board for the channel 1 is located nearest the front (viewed from the front of the machine).
In addition to the amplifiers, these audio electronics boards also contain the control elements for adjusting the operating parameters. Some of these are implemented as conventional trimmer potentiometers: for matching the input and output levels to the internal reference level. All other adjustments, particularly those for changing over to other tapes, other flux values or for compensating the loss at high frequencies are performed with DACs. These have the advantage that the parameters can be stored and retrieved from memory at any time.
The audio electronics boards are available in different configurations. The descriptions in this section refer to the fully configured boards. The numbers of the audio electronics boards are coded as follows: 1.727.4ab.xx
where:

a = 6: for use with glass metal heads: 1.318.xxx.xx
b = 0: fully configured version
b = 1: stereo without VU-meters (without MIC and SYNC)
b = 2: 2-channel with VU-meters, console version (without MIC)
b = 3: 2-channel without VU meters, but with output selector
b = 5: playback only
b = 6: same as b1, but with high tape speed
b = 7: same as b2, but with high tape speed
b = 8: same as b3, but with high tape speed
b = 9: same as b0, but with high tape speed
xx = Modification

The digital circuits required for controlling the DAC's on the audio electronics boards as well as other control circuits are located on the audio control board. In addition to the connectors for the audio electronics boards, it features additional slots into which other options can be plugged, i.e.:

- Preamplifier for a second reproduce head (GR 43),
- Mono/stereo switch for record and reproduce mode with built-in test generator (GR 43 - 46).
- Audio insert IF set (1.727.431.xx)

The parameters for controlling the DACs are set and retrieved via the front panel. (See 4.2.6 Input keyboard)

4.1.2 Level diagram

The signal flow through the unit can best be described using on the level diagram with a greatly simplified block diagram:

a) Record path:

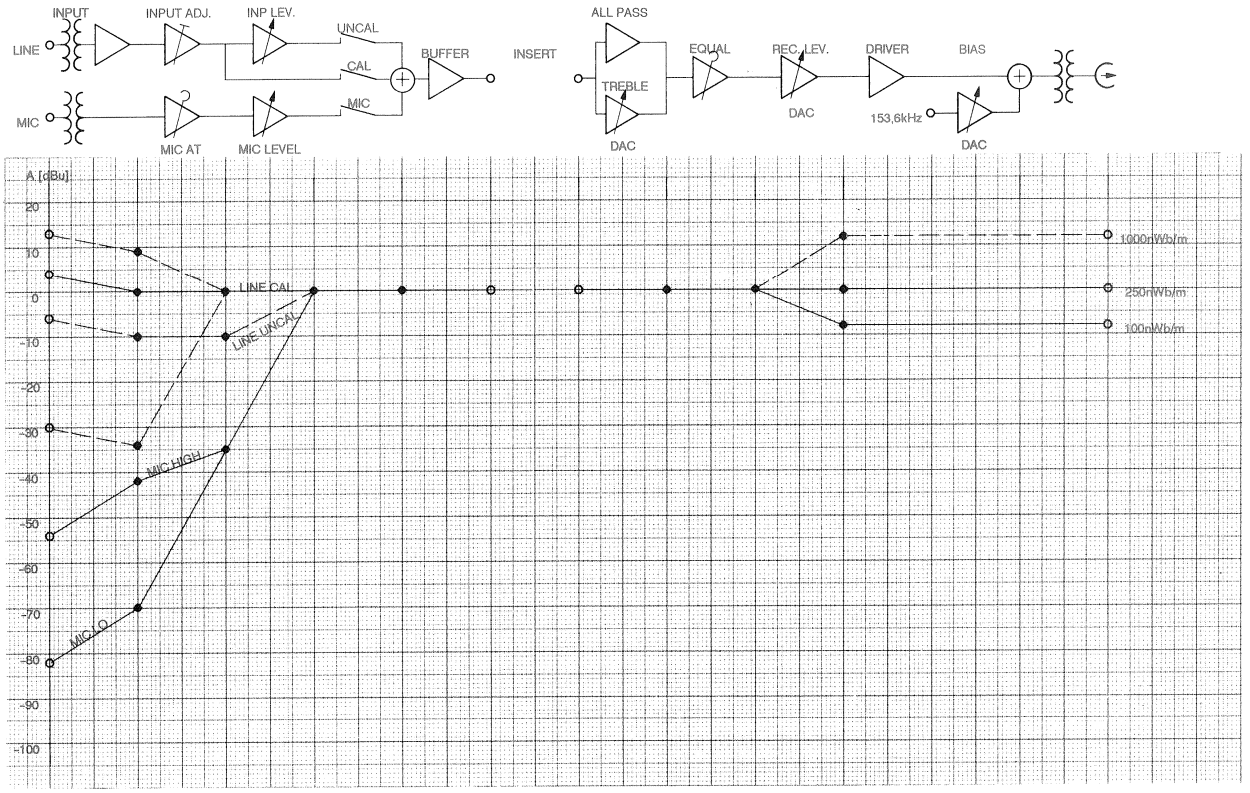

The unit is equipped with a balanced line input and a balanced microphone input. Both signals first pass through separate amplifiers; the basic gain (Input Adj. or Mic. Att) can be adjusted individually for each path. In the case of the line input, this adjustment is used for matching the external levels to the internal reference level of 0 dBu; for operation according to CCIR standard and for studio installations which are monitored with peak reading meters, it should be noted that all calibration levels are 6 dB below the peak levels.

Example:

peak recording level:	+6dBu
Input level:	0dBu
Internal reference level:	0dBu

The microphone input level can be controlled with the MIC LEVEL potentiometer. Also in the UNCAL position the line input can be adjusted with the INPUT LEVEL potentiometer.

Since the microphone path and the line path to the summation point are independent, both inputs can be operated in mixed mode (example: voice announcement to music). After the summing amplifier, a level of 0 dBu is available at the "Insert" point if the calibration is correct. Either the monitoring path or the output amplifier is connected to this point when the input signal is to be monitored. An additional circuit such as the mono/stereo switch can also be brought into the circuit at this point.
The signal path is subsequently split in:

- a high-pass (TREBLE) path with DAC controllable gain for treble adjustment, and
- a wide-band path with group delay equalization by an all pass filter.

This element is followed by the fixed, selectable standard equalization networks, the record level controller for determining the desired tape flux (also implemented with DACs), the bias superposition, and the record head.

b) Reproduce path:

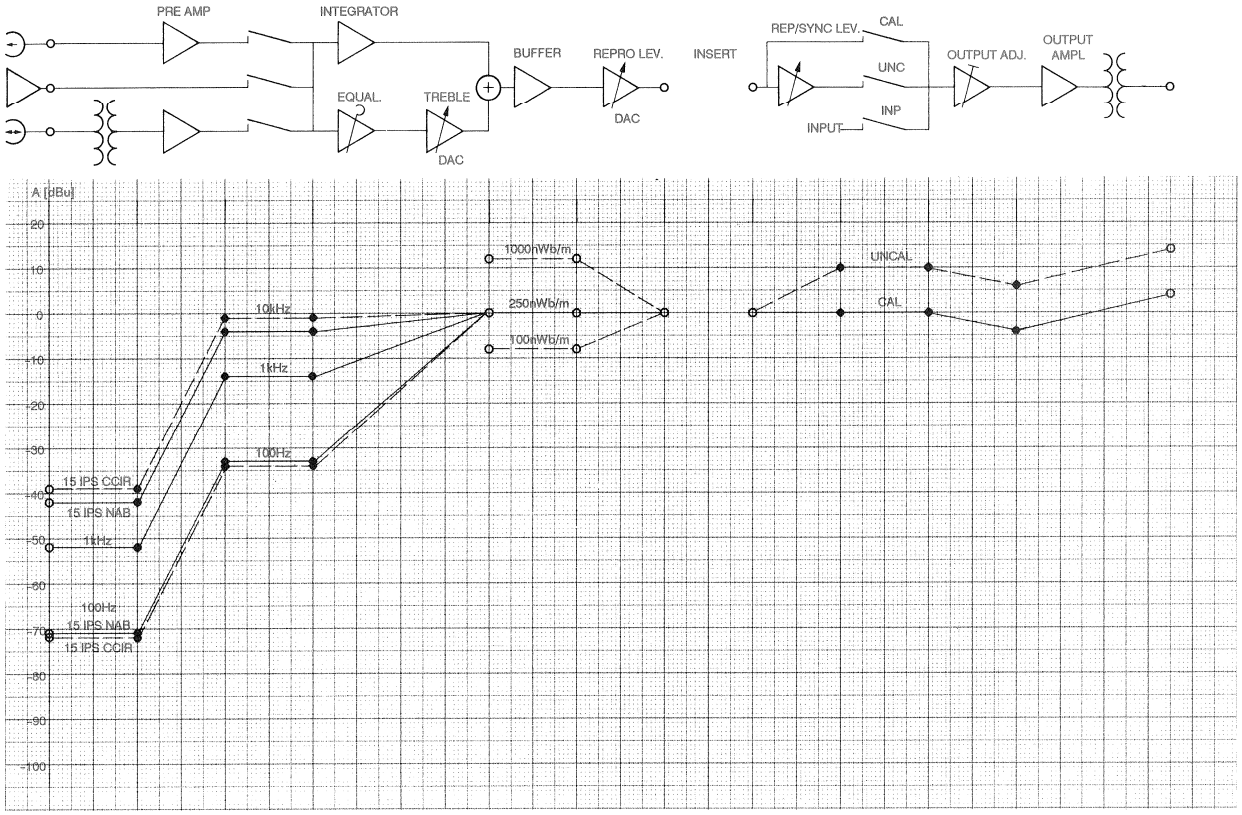

The reproduce amplifier has three selectable inputs:

- from the normal reproduce head via the preamplifier to the audio electronics board,
- from a supplementary reproduce head (if configured) via a separate preamplifier which is plugged into the audio control board, or
- from the record head (sync function, if configured).

The standard equalization can be adjusted via a switch, whereas the treble equalization can be adjusted via DACs. An integrator is responsible for basic compensation of the amplitude response that increases proportionately to the frequency.

After this DAC an insert point with internal reference level is reached. In the input mode the input signal from that insert point is picked up here. The output line level can also be adjusted (UNCAL position) or be selected with a fixed setting (CAL position).

4.1.3 Input amplifier

(See circuit diagram 1.727.460.xx - 469.xx).
The line input and the microphone input are each taken via a low pass filter in order to suppress high-frequency noise signals.
The basic gain for the line input is adjusted with R18; however the unit must be operated in CAL mode. In order to simplify the alignment, three adjustment ranges can be selected

Input level range:	Jumper JP1 in position
- 4...2dBu	A standard
- 17...1dBu	B
- 30...4dBu	C

The signal from the microphone is taken via an input transformer to the amplifier. In order to prevent overloading of the amplifier when high-level microphones are used, the gain can be decreased by approx. 28 dB by means of the MIC ATT key. The three paths Line cal, Line uncal, and Microphone are selected by the logical control signals:

C - CALINX	(Line cal)
C - UNCINX	(Line uncal)
C - MICONX	(Mikrofon)

This selection takes place in IC4. Since several signals can be selected at the same time, mixdowns are also possible (example: voice announcement to music).

4.1.4 Record amplifier

(See circuit diagram 1.727.460.xx - 469.xx).

From the insert point the audio signal A - RECINX is split into two paths: a high-pass path (TREBLE) in which the treble adjustment is made by the DAC IC11/2, and a wide-band path (IC5/1 with connected all-pass filter IC6/2 for compensating the group delay). In IC6/1 the two paths are summed again. The signal now passes through the standard equalization stage (IC8/2) in which the equalization is changed, as a function of the selected standard and speed, by the control signals C-EQA and C-EQB.
Certain standard equalizations contain the 3180 µs time constant which becomes active at low frequencies (see Fig. 4.2.1a).
This bass equalization is enabled by the jumpers W4 to W7 which are configured depending on the speed version. On standard models shipped by the factory the jumpers W5 and W7 are installed.
The STUDER A807 professional tape recorder is equipped with a facility for optimizing the output level at high frequencies according to the DOLBY HX PRO system. This system is enabled with the jumper JP 2; when it is in the **ON** position (factory setting), HX PRO is active.

The time constants for the buildup and decay of the RF bias and the voltage for the erase head are generated by the circuits around IC7/1 and IC7/2 respectively. The RF bias is adjusted with the DAC IS12; it produces a DC voltage at the output which causes the voltage of the RF bias to be adjusted in the OTA (Operational Transconductance Amplifier). The DOLBY HX PRO control circuit intervenes at this point.
The erase head voltage is controlled via the OTA IC16/1. For calibration it is adjusted with R139 (measurement on test point TP3).
It should be noted that the erase circuit is aligned to minimum current with the aid of T3 (measurement on TP4).

4.1.5 Reproduce amplifier

(See circuit diagram 1.727.460.xx - 469.xx).

The signal from the reproduce head is first amplified in a low-noise preamp (Q26 and IC19).
The analog switch IC17 selects between the normal reproduce head, the record head, as the sync reproduce head, or an optional second reproduce head. The sync preamplifier and the preamplifier for the second reproduce head, that can be plugged into the audio control board, basically have a similar design to the reproduce amplifier.
The filter with L6 and C95 to C97 is used to suppress bias components in the output voltage.
The signal path is subsequently split into two. IC20/2 is wired as an integrator and thus equalizes the reproduce frequency response, which basically increases in proportion to the frequency when the reproduce head is connected into a high impedance. At low frequencies a small amount of ripple is produced in the frequency response by the head face. This ripple is compensated by the combination of R219 and C129. At low tape speeds this RC time constant is bypassed by FET Q24.
The resistors selected by the analog switch IC18/2 limit the integration behavior at very low frequencies; the standard equalization of 3180 µs is thus activated (for NAB).
The upper signal path is laid out in such a way that it dominates, starting with medium frequencies. This means that as the frequency rises the response changes from integrator characteristic to a linear condition. This transition frequency corresponds to the standard equalization. At even higher frequencies the signal is again branched off via C99 and amplified by IC21/1. The gain of this path can be influenced with DAC IC23/3 (TREBLE adjustment).
All three paths are summed in IC25/1. It is followed by the DAC IC23/1 for controlling the total reproduce level.

4.1.6 Line amplifier

(See circuit diagram 1.727.460.xx - 469.xx).

The line amplifier (output amplifier) receives its input signal A - DRVINX from the reproduce insert point. This signal first passes through a voltage divider which is activated when FET Q28 conducts. This FET is activated as soon as double the nominal tape speed is exceeded in spooling mode. With cueing enabled, this prevents the occurrence of high output levels and high frequencies which are annoying and could even destroy the connected speaker. This voltage divider decreases the signal level by approx. 12dB and also limits the frequency response.
With the analog switch IC26, one of three line amplifier sources are selected:

- Normal reproduce path
- Reproduce path via repro level control and IC22/1 which provides a basic gain of 10dB,

or

- directly from the insert point of the input amplifier (signal A - PREOUX).

In certain modes, IC26 can disable (mute) all three inputs.
To prevent clicks at the output when the unit is switched on or off, the relay K 2 interrupts the signal path before and after the output amplifier.
At the output the adjustment of the output level (with R246) can be changes by selecting different adjustment ranges:

Output level range:	Jumper JP3 in position:
- 4... + 12dBu - 17...- 1dBu	A standard B

4.1.7 Monitor (standard version)

(See circuit diagram 1.727.680.xx, 1.727.681.xx and 1.727.120.xx)

With the monitor it is possible to monitor either the input or the reproduce signal. The source signal is tapped at the insert points. If the input signal is monitored, the position of jumper JS1 (left-hand channel) or JS2 (right-hand channel) on the audio control board defines whether the signal is monitored before or after the insert point. This selection is only meaningful if internal or external options are connected to the insert points and if the jumper IS3 or IS4 (on the audio control board) are consequently open.
The desired signal (input or reproduce) is selected by pulling out (input) or pushing in (output) the knob of a logarithmic potentiometer which is also responsible for the volume control.
The "Output" signal is tapped after the output selector IC26 and the muting relay K2 on the audio electronics board, in parallel to the VU meters. The selected signal is subsequently amplified by one amplifier per channel (IC8/1 left, IC8/2 right). The monitor signal can be picked up at the stereo jack; if no headphones are plugged in, the signal for the speaker amplifier IC10/2 and the output stage are enabled. When a faderstart occurs, the AS-FAD signal interrupts the FET Q4 via IC10/1 and consequently mutes the monitor speaker during fader start repro.

4.1.8 Stereo monitor (special version)

(See circuit diagram 1.727.910.xx).

With this monitor it is also possible to monitor either the input or the reproduce signal picked up at the corresponding insert points. The explanations given in 4.1.7 similarly apply to this version.
In addition two auxiliary inputs (AUX 1 or AUX 2) can be selected. By changing the setting of jumper JP 1 on the monitor board, it is possible to determine whether Aux 1 is used as the source for both monitoring channels or whether AUX 1 and AUX 2 are to be considered as a stereo pair.
The inputs are selected by IC 4. The logical control for this IC is also located on the monitor board. The signals of the momentary-action push buttons Input, Tape, and Aux are stored in the NOR flip-flops IC 14 and 15. The stored states are indicated by the LEDs DL 1 through 3. The logical gating before the flip flops prevents double assignment and causes a reset when new input signals become available. The monitoring left, right, or stereo, is enabled in a second analog switch IC 6. The logical control of IC 6 is similar in design to that of the source selection. The monitoring volume is determined by a stereo potentiometer. If no headphones are plugged in, the socket contact connects the input to the output amplifier. A muting circuit (Q 1 or Q 2) is located at the input of the speaker amplifier. It interrupts the signal path in the event of a remote fader start. The monitor speaker thus cannot interfere when the program is on the air.

4.1.9 Mono switch and test generator (option)

Test generator

(See circuit diagram 1.727.441.xx).
The test generator produces the following frequencies by changing the ext. components of IC5: 60, 125, 1k, 10k, and 16kHz.

The level is attenuated in steps of 0, -10dB, -20dB, and OFF by the analog switch IC6. IC7/1 is the output amplifier.
The test signal is mixed down to the audio channels via IC1/1 or IC2/1 resp.

Mono switch, input

(See circuit diagram 1.727441.xx or 1.727.451.xx).
From the outputs of the two amplifiers IC1/1 and IC1/2, signals are branched off and added by the summing amplifier IC2/1. A prerequisite for proper mono signal creation is that the jumpers JP1 and JP2

- Only the input signal of left channel CH1 or
- Only the input signal of right channel CH2 or
- The mixt signal of both channels on record head mono on track 1 und 2

Stereo or mono is selected with the analog switch IC3/1 and IC3/2.

Mono switch, output

(See circuit diagram 1.727.442.xx or 1.727.452.xx).
At the outputs of the two amplifiers IC 4/1 and 4/2, signals are branched off and combined to a mono signal by the summing amplifier IC 3/1. Depending on the position of jumpers JP 1 and JP 2, the mono signal appears either at the left-hand, the right-hand, or both outputs (this selection is performed by the analog switches IC 2/1 and 2/2).

4.1.10 Control logic (AUDIO CONTROL BOARD, GR 40)

(See circuit diagram 1.727.670/671/672 or 1.727.681.xx).

The microprocessor is responsible for all control functions of the audio electronics. The control signals and the data are generated in the CPU (IC12, TAPE DECK ELECTRONICS, GR10) and output serially via IC 28 on five lines.

The signals on these lines are as follows:

AS - WREN	Write enable
AS - STRAB	Strobe Strobe for data register and chip select AB
AS - CLK	Clock
AS - DATA	Serial data
AS - REC	Strobe for record control
AS - STR	Strobe for the other registers

The data arrives via the AS - DATA line, all other lines carry control signals.

The valid data records are latched into the instruction registers IC1 through IC5 and IC11, depending on the control signal. The individual registers fulfill the following functions:

IC3	register 1: Input control	Fig. 4.1.1
IC5	register 2: EQ control	Fig. 4.1.2
IC4	register 3: Record control	Fig. 4.1.4
IC11	register 4: Output control	Fig. 4.1.6
IC1	register 5: Adress register	Fig. 4.1.7
IC2	register 6: Data register	Fig. 4.1.8

The last two registers are used in conjunction with the AS - STRAB control signal for controlling the DACs.
The truth tables of the registers are summarized below; commands with the prefix C (control) are control commands for the audio boards, commands with the prefix S (switch) are initiated when an input function (e.g. key) is actuated.
However, these do not occur individually because the keys are read out from a matrix. The commands with prefix S are sent to the CPU already in coded form.

The generation of the commands C - EQA and C - EQB depend on whether the machine is a standard, a high-speed or a low speed version. The truth table is as follows:

Diodes		Speed	wire bridge
D6		ST	w5/w7
D6	D7	HS	w6/w8
		LS	w6/w9

The wire bridge W1 is omitted if a mone erase head is used.

Note: 0Ω-resistors are applied for the wire bridges W5...W9.

4.1.11 Preparation of the erase and bias signals

(See circuit diagram 1.727.670/671/672 or 1.727.681.xx).

The 307 kHz clock frequency derived from the internal clock signal (IC 11 TAPE DECK ELECTRONICS, GR 10) is supplied to the AUDIO CONTROL BOARD (AS-HFCLK). IC 12 functions as a frequency divider, IC 13/1 and 13/2 as a low-pass filter. From the 153 kHz square-wave signal, this circuit filters out the basic frequency for the bias. A distortion of less than 1‰.

4.1.12 Audio control board

Logic tables:

Register 1: Input control CH1 (IC3)				■ ■ ■ ■								C-MICAT 1 C-MICON 1 C-CALIN 1 C-UNCIN 1	
S-MICAT 1	S-MICON 1	S-LINON1	S-UNCAL 1									Notes:	
0	0	0	0	x	x	0	0	x	x	0	0	Line off, mic off	*
0	0	0	1	x	x	0	0	x	x	0	0	Line off, mic off	*
0	0	1	0	x	x	0	0	x	x	1	0	Line on calibrated	*
0	0	1	1	x	x	0	0	x	x	0	1	Line on uncalibrated	*
0	1	0	0	x	x	0	1	x	x	0	0	Mic on	*
0	1	0	1	x	x	0	1	x	x	0	0	Mic on	*
0	1	1	0	x	x	0	1	x	x	1	0	Mic on, line on cal.	*
0	1	1	1	x	x	0	1	x	x	0	1	Mic on, line on uncal.	*
1	0	0	0	x	x	1	0	x	x	0	0	Line off, mic off	#
1	0	0	1	x	x	1	0	x	x	0	0	Line off, mic off	#
1	0	1	0	x	x	1	0	x	x	1	0	Line on calibrated	#
1	0	1	1	x	x	1	0	x	x	0	1	Line on uncalibrated	#
1	1	0	0	x	x	1	0	x	x	0	0	Mic on attenuated	#
1	1	0	1	x	x	1	0	x	x	0	0	Mic on attenuated	#
1	1	1	0	x	x	1	0	x	x	1	0	Mic on att.line on cal.	#
1	1	1	1	x	x	1	0	x	x	0	1	Mic on att.line on unc	#

Register 1: Input control CH2 (IC3) (same as CH1 exept:)				■ ■ ■ ■								C-MICAT 2 C-MICON 2 C-UNCIN 2 C-CALIN 2	
S-MICAT 2	S-MICON 2	S-LINON2	S-UNCAL 2									Notes:	
0	0	0	0	0	0	x	x	0	0	x	x	Line off, mic off	*
..	..	..	..	..	..	..	..	..	..	..	..	....	..
..	..	..	..	..	..	..	..	..	..	..	..	....	..
1	1	1	1	1	1	x	x	1	0	x	x	Mic on att.line on unc	#
Mic sensitivity: * = -82dBu / # = -54dBu													

Fig. 4.1.1

S-MICAT 1	The microphone input level sensitivity changes.
S-MICON 1	The microphone input will be switched on or off.
S-LINON 1	The line input will be switched on or off.
S-UNCAL 1	The line level control pontentiometer will be switched on or off.

Register 2: EQ control (IC5)				■ C-EQ-N ■ C-EQ-F (Activ low) ■ C-EQ-M (Activ low) ■ C-EQ-S (Activ low)									
S-NAB	S-SPD-F	S-SPD-M	S-SPD-S									Notes:	HS-version:
0	0	0	1	x	x	x	x	0	1	1	0	CCIR 3,75 ips	CCIR 7,5 ips
0	0	1	0	x	x	x	x	0	1	0	1	CCIR 7,5 ips	CCIR 15 ips
0	1	0	0	x	x	x	x	0	0	1	1	CCIR 15 ips	CCIR 30 ips
1	0	0	1	x	x	x	x	1	1	1	0	NAB 3,75 ips	NAB 7,5 ips
1	0	1	0	x	x	x	x	1	1	0	1	NAB 7,5 ips	NAB 15 ips
1	1	0	0	x	x	x	x	1	0	1	1	NAB 15 ips	NAB 30 ips

Register 2: Output control (IC5)				■ C-SECHD ■ C-OUTSW ■ C-CUEAT (Activ low) ■ C-INSERT								
S-SECHD	S-POWER	S-LIFTER	S-INSERT									Notes:
0	0	0	0	0	0	0	0	0	x	x	x	
0	1	0	0	0	0	1	0	0	x	x	x	Power on
0	1	0	0	0	1	1	0	0	x	x	x	2 sec after power on
0	1	0	1	0	1	1	1	1	x	x	x	INSERT enabled
0	1	1	0	0	1	0	0	1	x	x	x	Lifter disabled, cue att. active
0	1	1	1	0	1	0	1	1	x	x	x	Lifter disabled, INSERT enabled
1	1	0	0	1	1	1	0	x	x	x	x	Second REPRO-head enabled
0	0	x	x	x	0	x	x	x	x	x	x	Immediately after power off

Fig. 4.1.2

S-NAB	NAB-equalisation is chosen with S-CCIR selected, S-NAB will be cancelled and vice versa.
S-SPD-M	High tape speed
S-SPD-M	Medium tape speed
S-SPS-S	Low tape speed
S-SECHD	Enabling of the second reproduce head
S-POWER	Tape recorder switched on
S-LIFTER	Tape lifter enabled
S-INSERT	Insertation (or enabling) of an option like Mono/Stereo switch or testgenerator ect.

For the subsequent processing of the command C-SECHD refer to Decoder IC9. (Fig. 4.1.3)

DECODER IC9 REPRODUCE MODE LOGIC			■ ■ ■ ■ ■ ■						C-REPRO1 C-SYNC1 C-SECRP1 C-REPRO2 C-SYNC2 C-SECRP2	
S-SECHD	C-SYNC1	C-SYNC2							CH 1	CH 2
0	0	0	1	0	0	1	0	0	Reproduce	Reproduce
0	0	1	1	0	0	0	1	0	Reproduce	Sync
0	1	0	0	1	0	1	0	0	Sync	Reproduce
0	1	1	0	1	0	0	1	0	Sync	Sync
1	0	0	0	0	1	0	0	1	2. Head, Repro	2. Head, Reproduce
1	0	1	0	0	1	0	1	0	2. Head, Repro	Sync
1	1	0	0	1	0	0	0	1	Sync	2. Head, Reproduce
1	1	1	0	1	0	0	1	0	Sync	Sync

Fig.4.1.3

Register 3 (IC4/2 CH) Record control **2 channel version IC4** **4 channel version:** **IC1 for CH1 + 2** **IC12 for CH3 + 4**			■ ■ ■ ■ ■ ■ ■ ■								C-INT (see TC processor) C-BIAS2 C-ERASE2 C-REC2 C-BIAS1 C-REC1 C-ERASE1 C-REC1	
S-READY1	C-READY2	C-REC	7	6	5	4	3	3	1	0	Notes:	
0	0	0	x	0	0	0	0	0	0	0	Refer to drop in/out time table	
1	0	0	x	0	0	0	0	0	0	0		
0	1	0	x	0	0	0	0	0	0	0		
1	1	0	x	0	0	0	0	0	0	0		
0	0	1	x	0	0	0	0	0	0	0	By activating the signal S-PLAY again,	
1	0	1	x	0	0	0	0	1	1	1	S-REC will become = 0 (LOW)	
0	1	1	x	1	1	1	0	0	0	0		
1	1	1	x	1	1	1	0	1	1	1		
S-READY TC												
0		0					0					
1		0					0				TC Record control	
1		1					1					

Fig.4.1.4

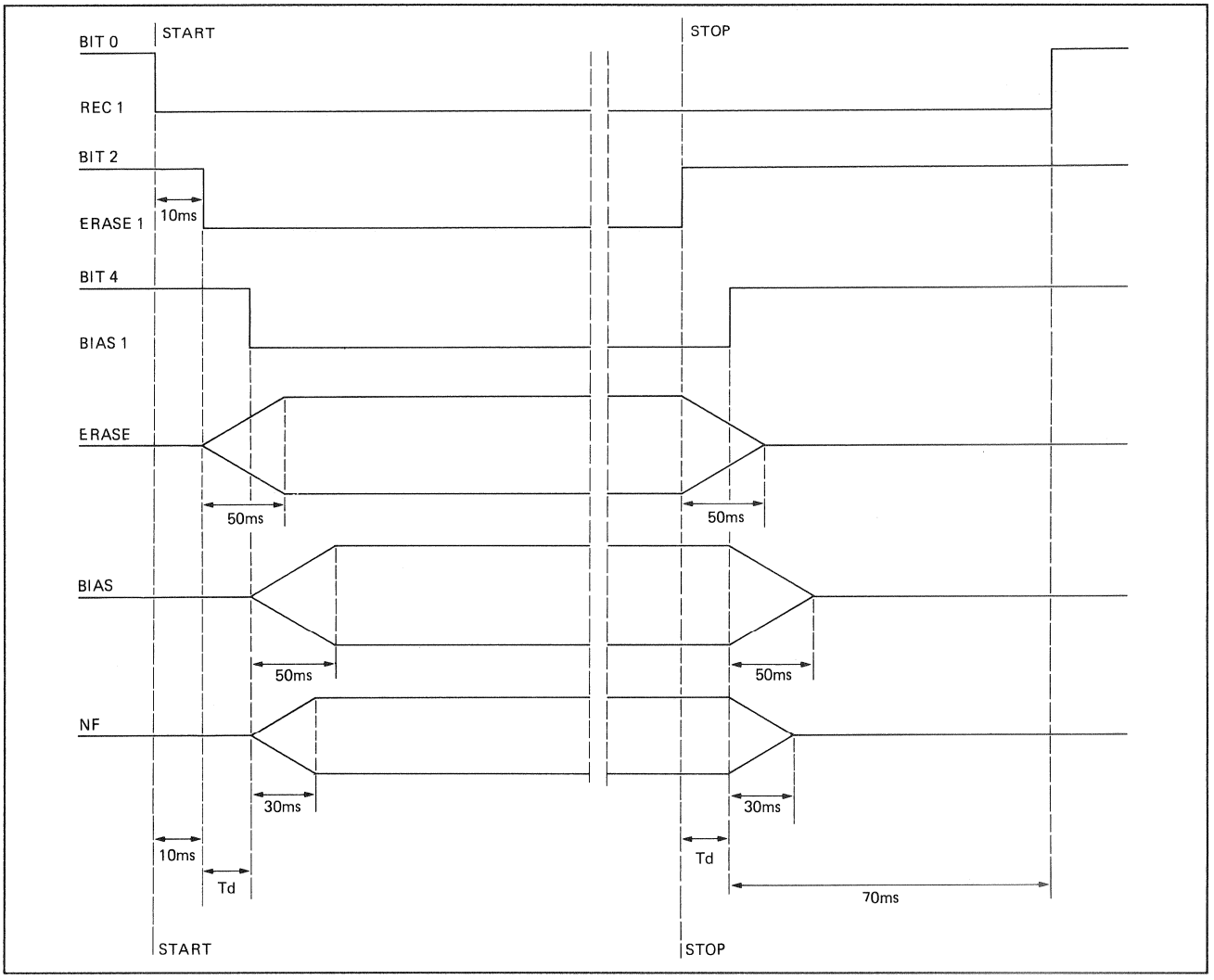

4.1.5

Lh = Distance between erase - and record head
Td = Time delay in ms
Vt = Tape speed in cm/s.

Example:

$$Td(s) = \frac{Lh(cm)}{Vt(cm/s)}$$

(Lh = 43,8 mm)
(Td = 115 ms)
(Vt = 38,1 cm/s)

Register 4: (IC11) Output control				■ C-INPUT2	■ C-UNCOU2	■ C-CALOU2	■ C-SYNC2	■ C-INPUT1	■ C-UNCOU1	■ C-CALOU1	■ C-SYNC1	
S-INPUT1	S-SYNC1	S-REPRO1	S-UNCOU1									Notes:
												See note 1 and note 2
1	0	0	0	x	x	x	x	1	0	0	1	Input 1 calibrated note 2
0	1	0	0	x	x	x	x	0	0	1	1	Sync 1 calibrated
0	0	1	0	x	x	x	x	0	0	1	0	Repro 1 calibrated
1	0	0	1	x	x	x	x	1	0	0	0	Input 1 calibrated
0	1	0	1	x	x	x	x	0	1	0	1	Sync 1 uncalibtrated
0	0	1	1	x	x	x	x	0	1	0	0	Repro 1 uncalibrated
S-INPUT2	S-SYNC2	S-REPRP2	S-UNCOU2									Notes:
												See note 1 and note 2
1	0	0	0	1	0	0	1	x	x	x	x	Input 2 calibrated note 2
0	1	0	0	0	0	1	1	x	x	x	x	Sync 2 calibrated
0	0	1	0	0	0	1	0	x	x	x	x	Repro 2 calibrated
1	0	0	1	1	0	0	0	x	x	x	x	Input 2 calibrated
0	1	0	1	0	1	0	1	x	x	x	x	Sync 2 uncalibtrated
0	0	1	1	0	1	0	0	x	x	x	x	Repro 2 uncalibrated

Fig. 4.1.6

The above push buttons will cancel their function when pressing them again.

Note 1: MUTE CONTROL
The output signal will be muted during each transient status like starting and braking phase.

Note 2: SYNC/INPUT - change over
By entering the record command while the machine is in SYNC - mode, the record enable signal S-READXY automatically switched off the signals INPUT2 signals instead.
Entering the PLAY - command again will cancel the above signals and the previous status will return.

Register 5: Adress register (IC1)
To control the audio parameters

Parameter:

TREBLE	channel 1,2; rec, repro
LEVEL	channel 1,2; rec, repro
BIAS	channel 1,2; rec

Control signals:
AS-STRAB (A/B)
WR-RECx, WR-BIASx, WR-REPRx
A-DO...AD7

■	Reserve
■	WR-BIAS2
■	WR-REC2
■	WR-REPR2
■	Reserve
■	WR-BIAS1
■	WR-REC1
■	WR-REPR1

STROBE A/B									Notes:	
x	x	0	0	0	x	0	0	0		
0	x	0	0	0	x	0	0	1	Level,	channel 1, reproduce
1	x	0	0	0	x	0	0	1	Treble,	channel 1, record
0	x	0	0	0	x	0	1	0	Level,	channel 1, record
1	x	0	0	0	x	0	1	0	Treble,	channel 1, record
x	x	0	0	0	x	1	0	0	Bias,	channel 1
1	x	0	0	1	x	0	0	0	Level,	channel 2, reproduce
0	x	0	0	1	x	0	0	0	Treble,	channel 2, reproduce
1	x	0	1	0	x	0	0	0	Level,	channel 2, record
0	x	0	1	0	x	0	0	0	Treble,	channel 2, record
x	x	1	0	0	x	0	0	0	Bias,	channel 2

Fig.4.1.7

After pressing one of the following push buttons, new audio parameters will be read into the DAC's:

S - Speed-x	(Tape speed)
S - CCIR	(Equalization)
S - NAB	(Equalization)
S - TAPE-x	(Tape sort)
etc.	

The timing can be seen from the following diagram of the data register:

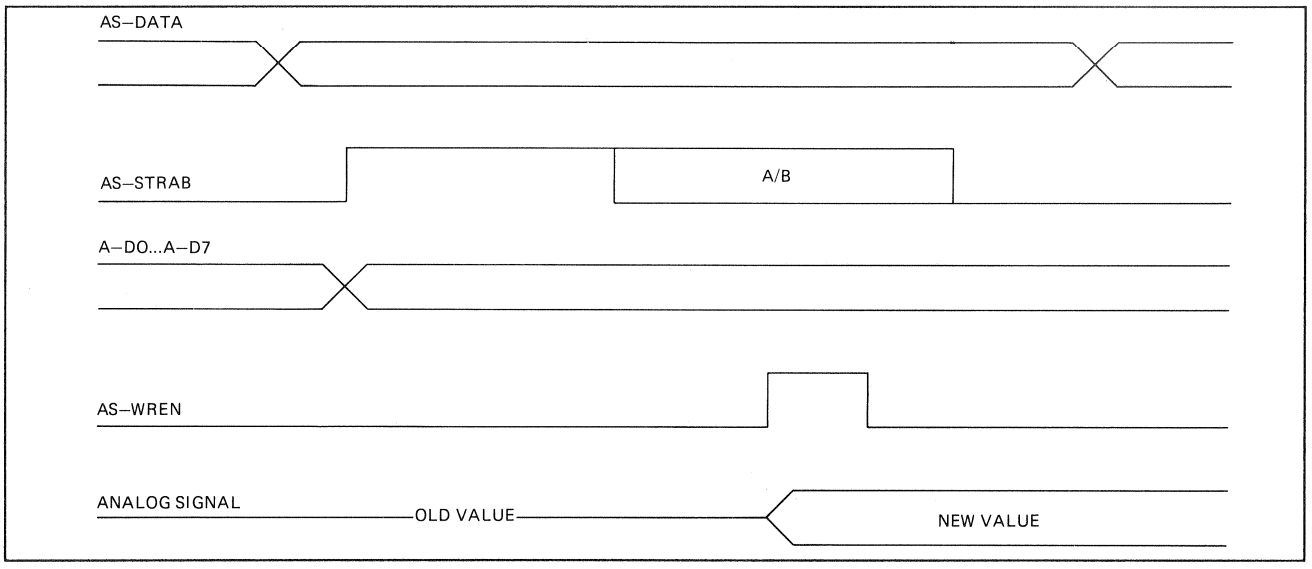

Fig.4.1.8

4.2 Calibration

The audio parameters are read from RAM into the registers of the audio amplifier whenever the tape speed, the tape type, or the equalization standard is changed.
When new parameters are set with the **up/down** [27/26] key or via the serial interface, the stored parameters in the RAM and in the registers of the audio amplifiers are overwritten.
The audio parameters are also stored in an EEPROM when the machine is switched off. This nonvolatile memory retains the data also while the machine is switched off. The data are recopied into the RAM when the machine is switched on again.
If the data are lost, all parameters are set to zero, i.e. all registers are closed.

4.2.1 Introduction

General:

The assumption is that the tape recorder to be calibrated has been mechanically adjusted to specifications (particularly with respect to the tape tensions and the tape transport).

Before you start with the calibration of the tape recorder, clean and demagnetize the heads and the tape guidance elements.
The calibration of the tape recorder should always be performed in order:

Reproduce alignments:

Preferred studio tape speed:
- Level
- Azimuth alignment of the reproduce head gap (see note 1)
- Frequency response (see note 2)

All other tape speeds:
- Level
- Frequency response (see note 2)

Note 1:

Depending on the reference tape, minor deviations can occur between the different speeds. In this case the final azimuth alignment should be made with the preferred studio speed.

Note 2:

Normally the studio tape recorders are calibrated with full-track reference tapes. Due to fringing frequency response errors occur in stereo and 2-channel machines at low frequencies, i.e. the low frequencies appear to be overemphasized.
This measurement error does not occur on tapes with correct guard track width or when a recording over tape is made.

Record alignments

Preferred studio tape speed:
- Record level preadjustment
- Azimuth alignment of the record head gap (bias parameter at approximately the same value for both channels!)
- Bias
- Record level
- Frequency response

All other tape speeds:
- Record level preadjustment
- Bias
- Record level
- Frequency response

SYNC reproduction

- Level
- Frequency response

4.2.2 Level definition

Voltage level
0 dBu = 0.775 V

(Refer to Figs. 4.2.1 and 4.2.2).

The definition is based on the voltage drop of 775 mV that results across a 600 Ω load resistor at 1 mW. This voltage is often defined without reference to a load as a voltage level of 0 dBm.

Correct is, however:

0 dBu = 0.775 V

Line level:

The level that,
- appears on the output of a tape recorder when a tape with reference flux is reproduced.
- fed to the input of a tape recorder produces reference flux on the tape.

Voltage reference level:

CCIR designation for line level; this level produces an indication of 0 dB on a quasi peak program meter (PPM).

Standard reference level: (operating level)

Designation commonly used in the USA for the level required for a tape flux of 250 nWb/m (for recording on high-quality tapes) or 200 nWb/m (for recording on standard tapes); this level gives a reading of 0 VU on a VU-meter.

Peak level:

Designation commonly used in the USA for a level that is 8 to 10 dB higher than the operating level. For reasons of simplicity, a peak level of +6 dB relative to the operating level (double the voltage value) is used for calibrating a tape recorder.

dBu	Voltage	dBu	Voltage
0	0,775V	0	775mV
+1	0,869V	-1	691mV
+2	0,975V	-2	615mV
+3	1,09V	-3	548mV
+4	1,23V	-4	489mV
+5	1,38V	-5	436mV
+6	1,55V	-6	388mV
+7	1,73V	-7	346mV
+8	1,95V	-8	308mV
+9	2,18V	-9	275mV
+10	2,45V	-10	245mV
+11	2,75V	-11	218mV
+12	3,08V	-12	195mV
+13	3,46V	-13	173mV
+14	3,88V	-14	155mV
+15	4,36V	-15	138mV
+16	4,89V	-16	123mV
+17	5,48V	-17	109mV
+18	6,15V	-18	97,5mV
+19	6,91V	-19	87,0mV
+20	7,75V	-20	77,5mV

Fig.4.2.1

- IEC/CCIR-Alignment

Definition:	Line level [dBu]	VU meter Ind. [VU]
Operating level:	+6	+6

- NAB-Alignment

Definition:	Line level [dBu]	VU meter Ind. [VU]
Operating level: "Peak level":	+4 +10	0 +6

4.2.3 Equalizations

Equalization networks that correct the frequency response are installed in the record and reproduce path.
The attack points of the correction are referred to as the transition frequencies or the transition time constants (1/w, at wich w = 2 πf) and have been standardized by various organizations (IEC, NAB, AES, CCIR).

Tape speed	**Transtion frequencies, low and high (Transition time constants)**		
	IEC-1968	NAB-1965	NAB-1975
9,53 cm/s 3,75 ips	50Hz;1800Hz (3180µs; 90µs)	50Hz;1800Hz (3180µs; 90µs)	- (-)
19,05 cm/s 7,5 ips	0Hz;2240Hz (∞ ;70µs)	50Hz;3150Hz (3180µs; 50µs)	0Hz;3150Hz (∞ ;50µs)
38,10 cm/s 15 ips	0Hz;4500Hz (∞ ;35µs)	50Hz;3150Hz (3180µs; 50µs)	- (-)
76,20 cm/s 30 ips	0Hz;9000Hz (∞ ;17,5µs)	AES 1971 0Hz;9000Hz (∞ ;17,5µs)	- (-)

Fig. 4.2.1 a

4.2.4 Magnetic reference flux, standard calibration data

When a recording with reference flux is reproduced, line level is produced on the output of the tape recorder.
The following standard settings are made by the factory:

CCIR settings:

- Line voltage: 220 V
- Line frequency: 50 Hz
- Line level: + 6 dBu
- Reading of the VU-meter at line level: + 6 VU
- Load impedance: 10 kΩ
- Tape type: AGFA PER 528

Tape flux with line level:

9,5 cm/s,	Stereo :	400 nWb/m
9,5 cm/s,	Mono :	250 nWb/m
19 cm/s,	Stereo :	510 nWb/m
19 cm/s,	Mono :	320 nWb/m
38 cm/s,	Stereo :	510 nWb/m
38 cm/s,	Mono :	320 nWb/m
76 cm/s,	Stereo :	510 nWb/m
76 cm/s,	Mono :	320 nWb/m

NAB settings:

- Line voltage: 220 V
- Line frequency: 50 Hz
- Line level: + 4 dBu
- Reading of the VU-meter at line level: + 0 VU
- Load impedance: 10 kΩ
- Type tape: Scotch 3M 226

Tape flux with line level:

for mono and stereo:

9,5 cm/s	200 nWb/m
19 cm/s	250 nWb/m
38 cm/s	250 nWb/m
76 cm/s	250 nWb/m

Until further notice the machines leaving the factory will be calibrated to one of these two standards.

4.2.5 Calibration tapes

Calibration tapes are used for aligning the reproduce path of tape recorders. They are generally magnetized across their full width. A separate tape is used for each tape speed.

Important:

In order to prevent unintentional erasure of these costly tapes, all channels should be switched to SAFE (i.e. the READY keys [36/56] are to be deselected so that the red LED is dark).

The reference tapes contain the following sections:

Level tone section:
(Reference flux = 320 nWb/m for 7,5, 15, and 30 ips; 250 nWb/m for 3,75 ips) produces line level in play mode on the output of the tape recorder.
The output level should be adjusted to the specified line level, while the approx. 60 to 180 sec. level tone section is being played.
NAB calibration tapes with a reference flux of 200 nWb/m produce an output level of -4 dB relative to 320 nWb/m; CCIR calibration tapes with a reference flux of 320 nWb/m produce in stereo mode an output level of -4 dB relative to the line level and 510 nWb/m.
Reference frequency: 333 Hz or 500 Hz at 3,75 ips; 1 kHz at 7,5 to 30 ips (there are also NAB calibration tapes with 700 Hz reference frequency).

Level adjustment:

- If the tape recorder is to be calibrated with a different (usually higher) reference level, the reference flux difference is computed according to the following formula:

$$20 \log \frac{\text{desired reference flux}}{\text{reference flux of tape}} = \text{Difference [dB]}$$

Example:

$$\text{Differenz} = 20 \log \frac{510\ \text{nWb/m}}{200\ \text{nWb/m}} = 8\text{dB}$$

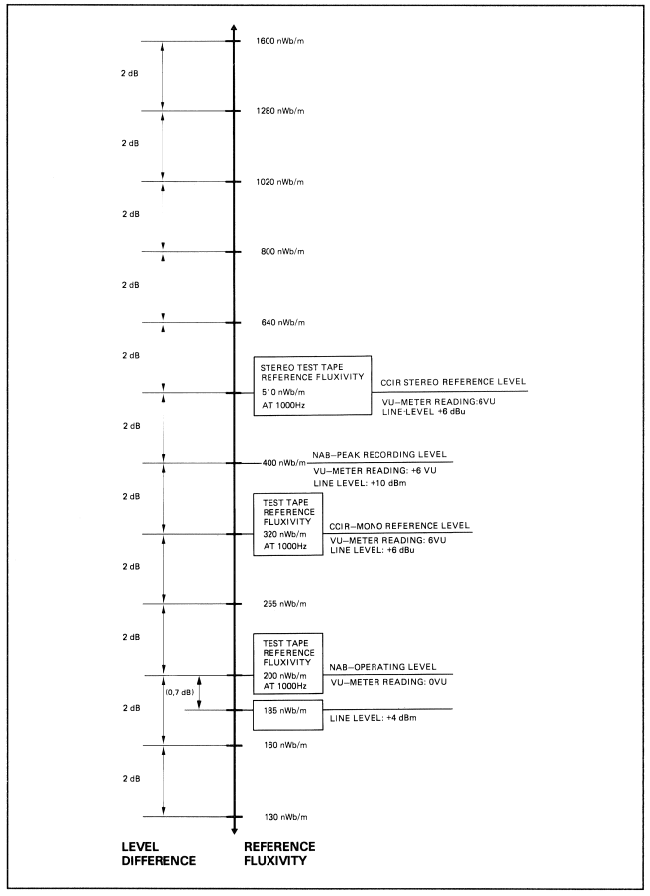

Fig.4.2.2

Azimuth alignment section:

Used for correcting the perpendicularity (azimuth alignment) of the reproduce head gap. This section comprises a shorter section with the reference frequency (for coarse adjustment) and a longer section with 10 kHz for fine-adjustment. NAB calibration tapes can be arranged differently. The level of this section is normally 10 dB below the reference level.
The alignment is made by means of the azimuth adjustment screw until the normal output voltage is achieved. In two-channel and stereo recorders, alignment to minimum phase difference between the two channels is possible with the aid of a 2-channel oscilloscope or an AF millivoltmeter with two inputs and summation.

Important:

If major adjustments on the reproduce head are made, additional voltage peaks occur, however with lower level!
If the reproduce amplifier operates with correct equalization, there is no difference between the reproduce levels of the reference frequency and the 10 (8; 16) kHz recording.

Frequency alignment section:

Used for determining and adjusting the operational reproduce frequency. NAB calibration tapes exist on which the frequencies differ from the following table.

Reference tape	CCIR (AGFA)				NAB (MRL)			
Tape speed [cm/s; ips]	9,5	19	38	76	3,75	7,5	15	30 AES
Rev. level sec.: Ref. Frequence Reference flux	315Hz 257Hz	1kHz 320nWb/m			1kHz 200nWb/m	1kHz(700Hz) 250nWb/m		
Azimuth Alignment section: (-10dB)	315Hz 10kHz	1kHz 10kHz			500Hz 8kHz 16kHz	500(700)Hz 8kHz 16kHz		
Frequency : response section: (CCIR:-20dB) (NAB :-10dB)	315Hz 31,5Hz 40Hz 63Hz 125Hz 250Hz 500Hz 1kHz 2kHz 4kHz 6,3kHz 8kHz 10kHz 12,5kHz 14kHz 16kHz 315Hz	1kHz 31,5Hz 40Hz 63Hz 125Hz 250Hz 500Hz 1kHz 2kHz 4kHz 6,3kHz 8kHz 10kHz 12,5kHz 14kHz 16kHz 18kHz 1kHz			31,5Hz 63Hz 125Hz 250Hz 500Hz 1kHz 2kHz 4kHz 8kHz 10kHz 12,5kHz 16kHz 20kHz	31,5Hz 63Hz 125Hz 250Hz 500Hz 1kHz 2kHz 4kHz 8kHz 10kHz 12,5kHz 16kHz 20kHz 1kHz		

Fig.4.2.3

Audio Operating Elements

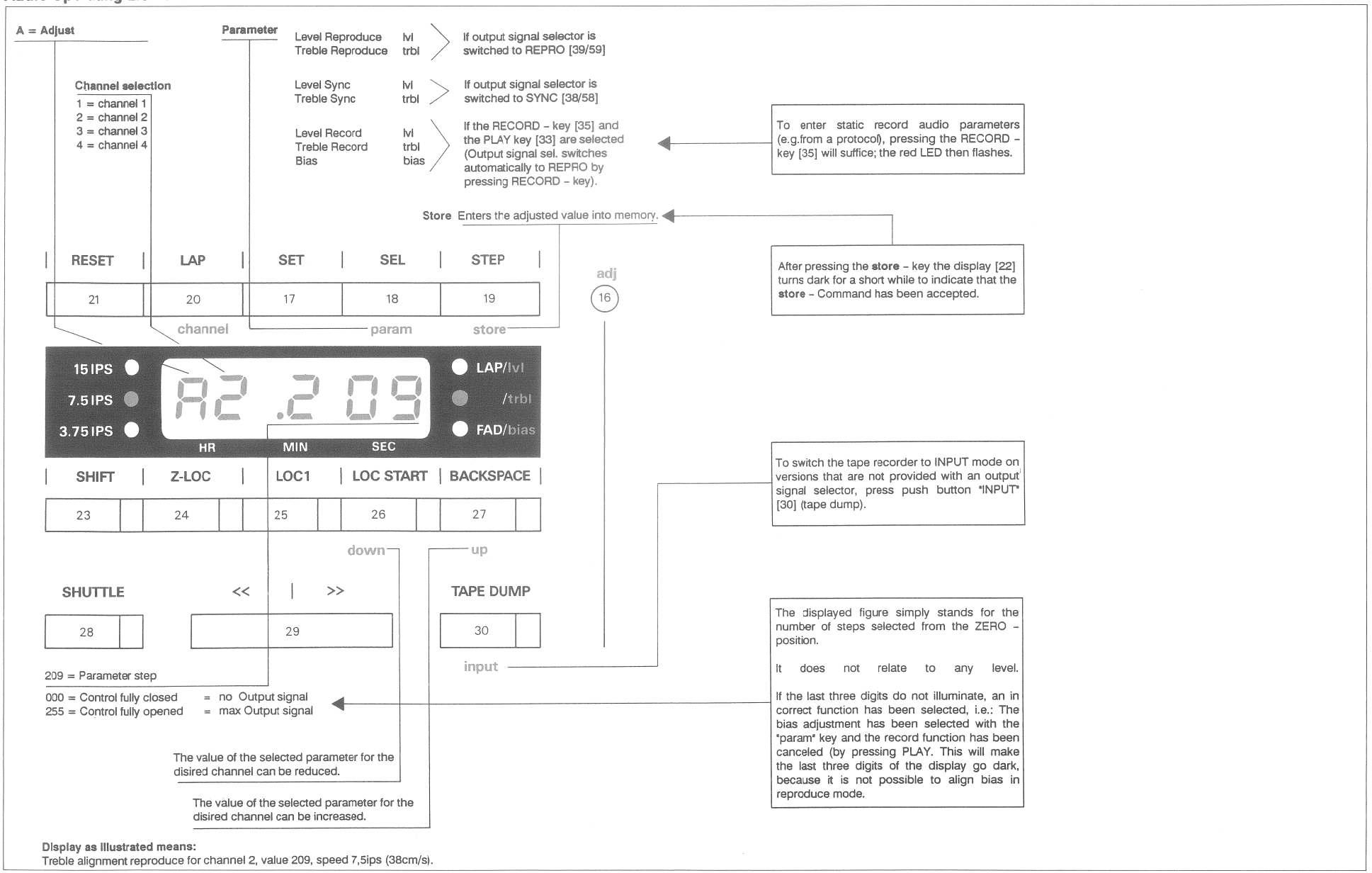

Display as illustrated means:
Treble alignment reproduce for channel 2, value 209, speed 7,5ips (38cm/s).

EDITION: 31. Januar 1992

4.2.6 Input keyboard

Keys with additional yellow lettering are dual function keys:
When the **"adj"** [16] key is pressed, these keys are assigned to the function specified by the yellow lettering. (In the following audio setup key summary, these functions are shown in red).
With these keys it is possible to perform all audio setups (except line level adjustment and RF circuit alignment) from the outside without any tools.
When the "adjust" [16] key is pressed, the display changes to:

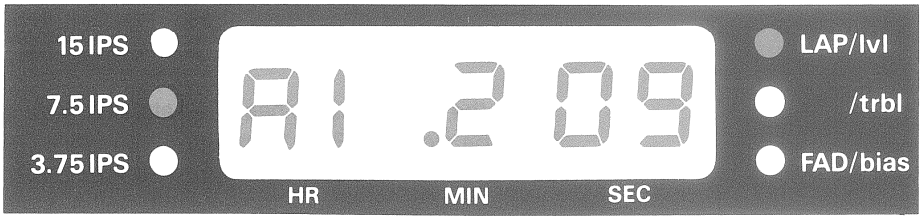

The tape recorder is now prepared for adjusting the reference level based on a reproduce calibration tape.

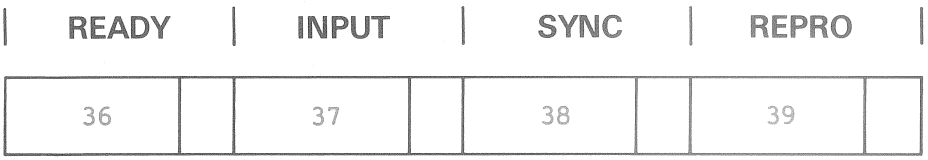

If output function selector keys are available, it is possible to determine in play mode whether the reproduce channel or the sync reproduce channel (reproduce signal read from the record head) is to be adjusted.
If the INPUT function is selected, the last three digits on the display disappear because the internal level cannot be adjusted to the external line level by means of the keyboard. For alignment instructions refer to Section 4.2.8.

Note:

In "adjust mode" the output function selector keys for stereo channels 1 and 2 are switched in parallel, i.e. when the function key of one channel is pressed, the other channel switches automatically to the same function.
If, for example, the reproduce level for channel 1 is to be adjusted, the left-hand section of the display [22] should show A1, otherwise press the **channel**[20] key for this display. The reproduce level can only be changed if the lvl LED to the right of the display window glows; this state can be selected by pressing the **param** [18] key. Of course, the output selector keys must be switched to REPRO [keys 39] for modifying the reproduce level.

Displaying the set value:

The amplifier gain can be adjusted between 0 and the maximum in 255 steps (corresponds to 256 discrete values).
These 256 values correspond to range between the minimum and the maximum setting of a potentiometer.
The adjusted value is displayed on the tape timer:

e.g. **A1 .209.**

Important:

From the displayed figure (e.g. 209) the user can determine the range in which the corresponding amplifier operates. No conclusions concerning the actual voltage values can be drawn from this reading!

Modifying and storing the parameters:

Pressing the **up** [27] key increases the gain, the **down** [26] key decreases the gain.
Pressing **up** or **down** has the same effect as the clockwise or counterclockwise adjustment of a potentiometer.
The gain changes continually when the **up** or **down** key is held down.
The amplifiers immediately operate with the changed level (same as with conventional potentiometer settings).
In contrast to conventional potentiometers, the original value stored in the RAM can be retrieved at any time by pressing the "**adj**" [16] key.

When the desired value has been attained (e.g. operating level +10 dBu = 2.5 V), it can be stored in RAM by pressing the **store** [19] key; the display [22] turns dark for a brief moment and thus acknowledges that the setting has been stored.

Buffering the parameters

As soon as a value has been modified with the **up** or **down** key, the dot in front of the 3-digit number on the display [22] flashes to indicate that for the corresponding function the audio amplifier no longer works with the value stored in RAM but with the modified value.
The modified value is stored in a buffer and is retained even when the next adjustment is started before you have pressed the **store** [19] key. For example different bias and treble equalization values for linearizing the frequency response can be tried without losing the original values stored in RAM.

Important:

If new values are to be stored in the RAM, all modified setup functions must be selected individually and be stored separately by pressing the **store** [19] key.

Example:

Select treble	adjustment	channel1	and press **store**
Select bias	adjustment	channel1	and press **store**
Select treble	adjustment	channel 2	and press **store**
Select bias	adjustment	channel 2	and press **store**

The value in the buffer memory is deleted when the **store** [19] is pressed.

When the "**adj**" [16] key is pressed, all parameters in the buffer memory are deleted and the original RAM values are reactivated!

For comparison purposes, the gain settings shown on the display can be recorded in a log.

Example:

A 807 Ser.No...	Tape speed						Remarks
NAB..... CCIR..... Tape A/B.... Head A/B....	30 ips 15 ips		15 ips 7,5 ips		7,5 ips 3,75 ips		....
	CH1	CH2	CH1	CH2	CH1	CH2	
Repro level treble	... ...	... ...	... ...	... ...	... ...	... ...	
Record level treble bias	... ...	... ...	... ...	... ...	... ...	... ...	
Sync level treble	... ...	... ...	... ...	... ...	... ...	... ...	

Fig.4.2.5

Two such logs are required for the complete documentation of a tape recorder if a different calibration was performed for NAB and CCIR (or for tape type A, type B; or reproduce head A, head B).

4.2.7 Audio receiver layout

After the rear panel has been removed, the audio module can be pulled out by pressing the two locking springs marked with arrows.
In stereo models the circuit board facing the rear panel is for channel 1, the other is for channel 2. The following potentiometers and test points are needed for the following adjustment of the internal levels:

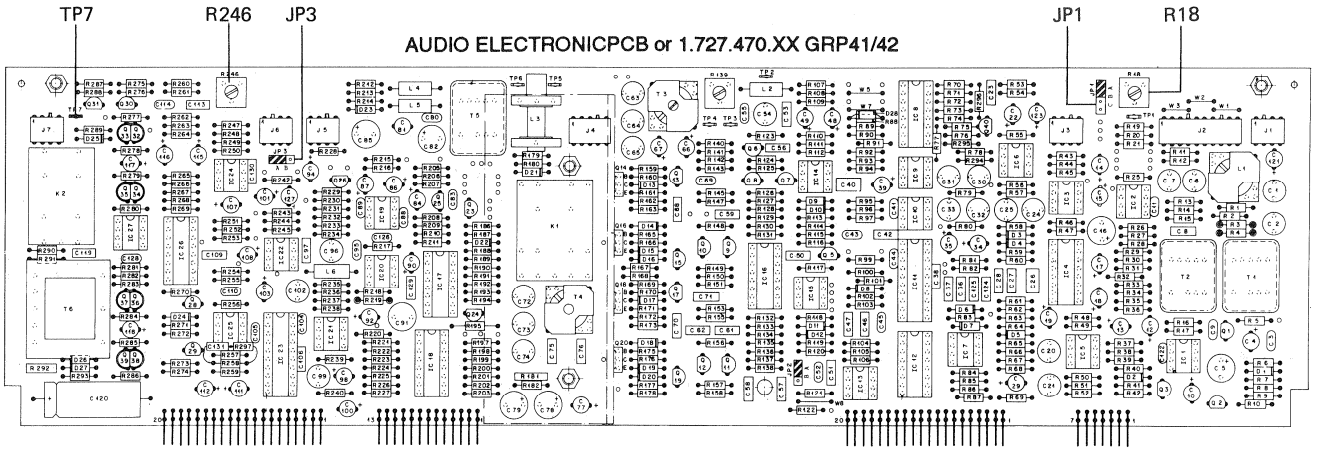

Fig. 4.2.6

4.2.8 Matching the internal level to the operating level

For record/reproduce models

Preparatory steps:

- Remove the rear panel
- Switch the machine to INPUT by pressing the keys [37].
  On models without INPUT key, actuate the microswitch "**adj**" [16] with a pointed instrument (pencil). (If disabled, change the setting of jumper JS6 below the front panel!).
- Press the TAPE DUMP [30] key in order to switch the machine to INPUT.

If existing:

- Switch all UNCAL keys [42, 49] to calibrated mode.
- Select LINE ON [43] keys.
- Deselect MIC ON [44] keys.
- Set MONO/STEREO [55] switch to stereo.

Connect the audio frequency generator to the line input to be calibrated (CH 1, CH 2) and feed 1 kHz with operating level (corresponds to input level for a recording of 0 VU).
This corresponds to the following standard values:

CCIR 0,775 Veff	(0 dBu)
NAB 1,23 Veff	(+4 dBu)

Note:

If the input sensitivity should be higher (e.g. for operation with hi-fi equipment), the setting of jumper JP 1 can be changed.

Position	**A:**	input sensitivity	- 4...+12 dBu (Standard).
Position	**B:**	input sensitivity	- 17... -1 dBu.
Position	**C:**	input sensitivity	- 30...-14 dBu

Adjustment procedure:

- On the AUDIO ELECTRONICS PCB 1.727.460/461/462 1.727.463/465/467/-468/469 (GR 41 or 42), measure the 1 kHz signal on test point TP 7 of the channel to be calibrated and adjust the signal with the aid of R18 to 0.775 V (0 dBu). This value is identical for NAB and CCIR.

Important: measure with high impedance, i.e. without termination resistor!

- Connect the AF millivoltmeter to the output to be calibrated.
- With the aid of R 246 adjust the output signal to the desired operating level.
  This corresponds to the following standard values:

CCIR 0,775 Veff	(0 dBu)
NAB 1,23 Veff	(+4 dBu)

Note:

If the output level should be smaller (e.g. for operation with hi-fi equipment), the setting of jumper JP3 can be changed.

Position	**A:**	output level range	-4...+12 dBu (Standard).
Position	**B:**		-17...-1 dBu.

4.2.9 VU-meters

(Not applicable to machines without VU-meters)

Pull off the MIC level knobs on the VU-meter panel (or the RECORD LEVEL knobs on the external VU-meter panel. The trimmer potentiometers on the COMMAND PANEL PCB 1.727.661/462 and 762 (TC) (GR30) or the external VU-meter panel PCB 1.727.928/945 thus become accessible.

- Apply a 1 kHz input signal for 0 VU indication to the INPUT (same as 4.2.8)

Standard values for CCIR and NAB:

NAB	1,23	Veff	(+4 dBu)
CCIR	0,775	Veff	(0dBu)

Alignments:

For 1 or 2-channel units with built-in VU meters:

Adjust the reading to 0 VU.
- For channel 1 with R 35
- For channel 2 with R 75

on the command panel board.

For 1 or 2-channel units with VU meters installed in external panel:

Adjust the reading to 0 VU
- For channel 1 with R 16
- For channel 2 with R 46

on the VU meter board 2CH 1.727.928.

For 4-channel units with VU meters installed in external panel:

Adjust the reading to 0 VU
- For channel 1 with R 14
- For channel 2 with R 44
- For channel 3 with R 74
- For channel 4 with R 104

On the VU meter board 4CH 1.727.945

4.2.10 LED peak indicator

(Not applicable to machines without VU-meters)

The trimmer potentiometers for the LED peak meters become accessible after the line level knobs on the VU-meter panel or the REPR/SYNC LEVEL knobs on the external VU-meter panel have been removed.
Increase the input level by 6 dB according to Section 4.2.8.

Standard values for CCIR and NAB:

CCIR 1,55 Veff	(+6 dBu)
NAB 2,46 Veff	(+10 dBu)

Alignments:

For 1 or 2-channel units with built-in VU meters:

Adjust the "+6" LED in such a way that it just lights up.
- For channel 1 with R 50
- For channel 2 with R 90

on the command panel board.

For 1 or 2-channel units with VU meters installed in external panel:

Adjust the "+6" LED in such a way that it just lights up.
- For channel 1 with R 18
- For channel 2 with R 48

on the VU meter board 2CH 1.727.928

For 4-channel units with VU meters installed in external panel:

Adjust the "+6" LED in such a way that it just lights up.
- For channel 1 with R 16
- For channel 2 with R 46
- For channel 3 with R 76
- For channel 4 with R 106

On the VU meter board 4CH 1.727.945

Note:

The peak LEDs "+9" and "+12" cannot be adjusted. They automatically follow the setting of the "+6" LED.

4.3 PLAYBACK ONLY tape players

Alignment instructions for:

- Internal level
- External level
- VU and peak meter display
- Magnetic flux

Preparatory steps:

- Actuate the "**adj**" [16] microswitch with the aid of a pointed tool (pencil). If it is disabled, change the setting of jumper JS6 below the front panel!
- Switch the UNCAL [49] keys for the output level potentiometer to the calibrated position. If existing: set the MONO/STEREO [55] switch to the stereo position.

4.3.1 Level adjustments if the desired tape flux corresponds to the reference tape flux

Because the nominal (reference) flux and the nominal level according to NAB relate to the operating level, and for CCIR to the peak recording level, different adjustments result for NAB and CCIR as shown in the following table:

	NAB [1]		CCIR [2]	
Flux density from testtape	200 nWb/m	250 nWb/m	250 nWb/m	320 nWb/m
Required level	200 nWb/m	250 nWb/m	250 nWb/m	320 nWb/m
1A Internal level (on TP7)	0dBu= 0,775V	0dBu= 0,775V	6dBu= 1,55V	6dBu= 1,55V
2A External level (on XLR)	4dBu=* 1,23V	4dBu=* 1,23V	6dBu=° 1,55V	6dBu=° 1,55V
3A VU meter Indication	0 VU	0 VU	6 VU	6 VU

Fig. 4.3.1

* +4 dBu corresponds to the standard operating level for NAB
° +6 dBu corresponds to the standard peak recording level for CCIR
[1] NAB standard: 200 nWb/m = 0VU/+4 dBu operating level
[2] CCIR standard: 320 nWb/m = 6VU/+6 dBu peak recording level

- Mount the calibration tape, section: level tone
- Connect the AF millivoltmeter to test point TP7 of the circuit board AUDIO CONTROL ELECTRONICS PCB 1.727.464/465/467/468.xx.
- Start the recorder in play mode.

The internal level on TP 7 can be adjusted with the **up** and **down** keys [27,26] to 0VU for NAB and +6 dBu for CCIR (refer to Table 4.3.1 in **1A**).

Important:

After the correct value has been set with the **up** and **down** keys, it must be saved in memory by pressing the **store** [19] key.

- Connect the AF millivoltmeter to the output to be measured and adjust the output signal to the desired line level by means of R246:
  NAB to operating level / CCIR to peak recording level

Standard values:

for NAB +4 dBu (1,23 V)	= operating level = 0 VU
for CCIR +6 dBu (1,55 V)	= peak rec level = 6 VU

(also refer to Table 4.3.1 under **2A** (external level)

Note: If the output level range should be smaller (e.g. for operation with hi-fi equipment), the position of jumper JP3 can be changed.

Position	**A:**	output level range	- 4...+12 dBu (standard)
Position	**B:**	output level range	- 17... -1 dBu

4.3.2 VU and peak meter adjustment for playback only tape players.

Preparatory steps:

- Remove the front panel
- Same measurement arrangement as above
- Connect the AF millivoltmeter to the output to be measured and play the level tone section of the calibration tape:

The trimmer potentiometers R35, R50, R75, and R90 are located on the command panel PCB 1.727.664.00 or 1.727.665.00 respectively.

Adjustment procedure:

NAB:

- Adjust R35 for channel 1 and R75 for channel 2 (see table 4.3.1 under "**3A** VU meter reading").
- Activate the UNCAL [49] key and increase the output level of the channel to be measured by 6 dB with the aid of the output level potentiometer [67]. (For NAB standard calibration this corresponds to a level of +10dBu (2.45V) on the AF millivoltmeter).
- Adjust R50 for channel 1 and R90 for channel 2 in such a way that the "+6" peak LED just lights up.

CCIR:

- Press the two UNCAL [49] keys and lower the output level of the channel to be measured by 6 dB with the aid of the output level control [48] of the corresponding channel. (For CCIR calibration this corresponds to a level of 0 dBu (775 mV) on the AF millivoltmeter).
- Adjust R35 for channel 1 and R75 for channel 2 to 0 V (See Table 4.3.1 under "**3A** VU meter reading"
- Release the two UNCAL keys and adjust R50 for channel 1 and R90 for channel 2 in such a way that the "+6" peak LED just lights up.

Note: The "+9" and "+12" peak LEDs cannot be adjusted. They automatically follow the setting of the "+6" LED.

4.3.3 Adjusting the level when the desired tape flux does not correspond to the one on the reference tape

If the desired magnetic flux does not correspond to the one on the reference tape, the level correction value (▲U) must be determined.

The level correction value (▲U)

is positive if the desired tape flux is less than the one on the reference tape, and negative, if the desired tape flux is greater than the one on the reference tape. The level correction value (▲U) can be determined from Table 4.2.2.
For example:

- Desired tape flux 250 nWb/m
- Available reference tape 200 nWb/m
- Level correction value (▲U) = -2 dB).

The level correction value (▲U) determined from Table 4.2.2 is to be deducted from or added to (depending on the sign) from the values **1A**, **2A**, **3A**) in Table 4.3.1.

For the above NAB example this means

Internal level	0 dBu - 2 dBu	= - 2 dBu
External level	4 dBu - 2 dBu	= + 2 dBu
VU meter reading	0 VU - 2 dBu	= - 2 VU

Other common settings are listed in the following Table 4.3.2 (all others can be calculated based on Table 4.3.2).

Alignment:

The alignment can be made analogously to those described in Section 4.3.1.

Play the level tone section of the reference tape and:

- Internal level: set it to the calculated value
- External level: desired line level +/- level correction value
- VU meter: adjust it to the calculated value.

Note:

If the value to be set is above the VU meter reading (+3 VU) or far below the 0 VU mark, connect a millivoltmeter to the XLR output and change the gain with the output level potentiometers [48] (enabled by pressing the UNCAL [49] keys) in such a way that a 0 VU reading can be attained. (Also refer to example **2A**).

	CCIR				NAB			
Testtape	510 nWb/m	250 nWb/m	320 nWb/m	320 nWb/m	**200** nWb/m	200 nWb/m	250 nWb/m	250 nW/m
Required flux density	320 nWb/m	400 nWb/m	510 nWb/m	640 nWb/m	**250** nWb/m	320 nWb/m	320 nWb/m	510 nW/m
Level correction	+4 dBu	-4 dBu	-4 dBu	-6 dBu	**-2** dBu	-4 dBu	-2 dBu	-6 dBu
Internal level (on TP7)	+10 dBu	+2 dBu	+2 dBu	-0 dBu	**-2** dBu	-4 dBu	-2 dBu	-6 dBu
External level (on XLR)	+10° dBu	+2° dBu	+2° dBu	-0° dBu	**+2*** dBu	0* dBu	+2* dBu	-2 dBu
VU-meter-indication	+10 VU	+0 VU	**+2** VU	-2 VU	-2 **VU**	-4 VU	-2 VU	-6 VU

Fig. 4.3.2

* This level on the XLR output corresponds to a CCIR peak level of +6 dBu.
° This level on the XLR output corresponds to an NAB operating level +4 dBu.

Peak LED:

- The peak LED should light up at peak level (= 6 dBu above the indicated VU value).

Since the nominal tape flux of CCIR units relates to the peak level (6 dBu), this means: The calculated value of the external level in Table 4.3.2 corresponds to the response threshold for the "+6" peak LED.

In NAB units the nominal tape flux relates to the operating level (0 VU), i.e. 6 dBu must be added to the external level calculated according to Table 4.3.2.
(Refer to the marked column in the above Table 4.3.2).
Line level: +4 dBu (= external level on the XLR output)

Example 1:

Requirement:
NAB Testtape 200 nWb/m
Desired bandflux 250 nWb/m = bandflux correction level -2 dBu

- VU meter indication of -2VU corresponds to the external level of +2 dBu.
- Peak LED indication on (-2 dBu +6dBu =) +4 VU. This corresponds to the external level of (+2 dBu + 6 dBu =) +8 dBu.

- Connect the millivoltmeter to the XLR output to be measured and increase the output level trimmer [48] (enabled with UNCAL key [49]) for +6 dBu.

In the above example: increase the output level for 6 dB to +8 dBu.

- The command panel PCB potentiometer can then be calibrated with R50 for channel 1 and R90 for channel 2 in such a way that the peak LED "+6" just lights up.

Example 2 :

Requirement:
320 nWb/m = 6 VU = 6 dBu line level
Available calibration tape 510 nWb/m.
Standard line level (extern level) +6dB.

With the definition of 6 VU we know that the 6 dBu line level corresponds to peak recording level, i.e. the internal level is also at the peak value (6 dB above 0 VU).

The level correction value (computed according to Table 4.2.2) is +4 dB.
Consequently, when the 510 nWb/m calibration tape is played, the internal level on TP 7 of the corresponding audio electronics board must be adjusted to +6 dBu + 4 dB = 10 dBu = 2.45 V (by means of the **up** [27] and **down** [26] keys.

- The external level is at +6 dBu + 4 dB = 10 dBu. Adjustable with R246 on the corresponding audio electronics board.

The VU meter reading should also be 6 VU +4 dB = 10 VU.
Since this value is not adjustable, the level must be lowered by 10 dBu with the output level potentiometers [48] (enabled by pressing the UNCAL [49] keys).

The VU meter can then be calibrated to 0 VU with R35 for CH1 and R75 for CH2 on the command panel board.
The peak LED is generally light when the level is 6 dB above 0 VU, i.e. in this example the "+6" peak LED should light up when the line level is +10 dBu.

Deselect the UNCAL key (= calibrated position) and adjust the potentiometers R50 for CH1 and R90 for CH2 on the command panel PCB in such a way that the corresponding LED just lights up.

Note:

If no AF millivoltmeter with dB scale is available, the voltage values can be derived from Table **4.2.1**.

4.4 Reproduce alignment

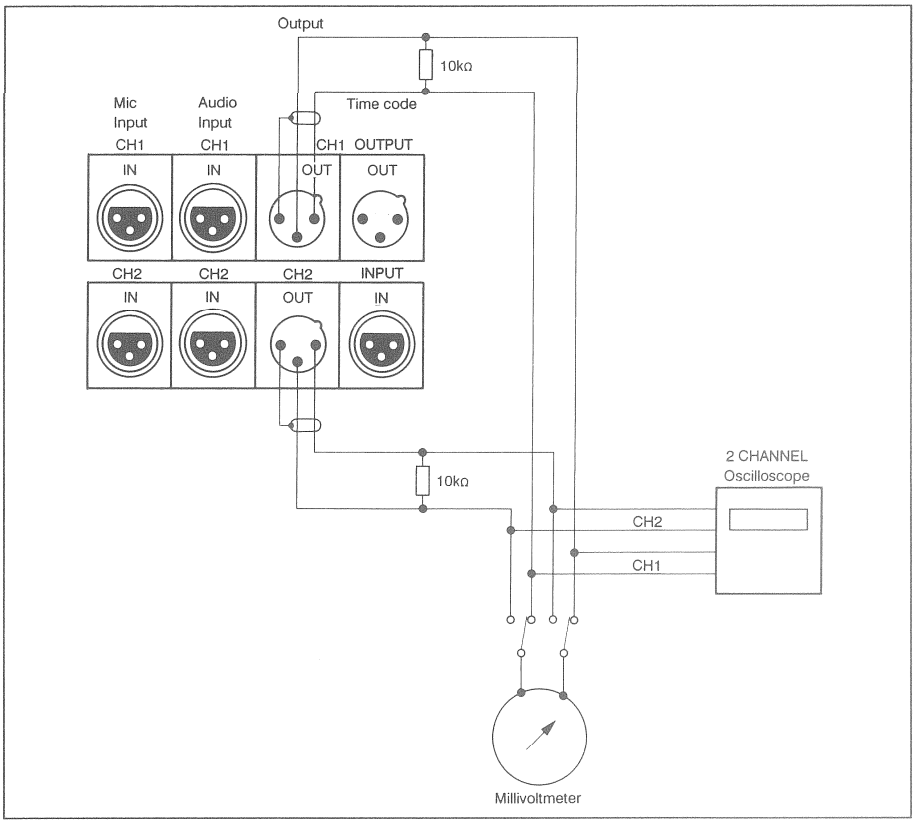

Fig. 4.4.1

4.4.1 Preparation

The alignment is performed with the aid of the front-panel.

Preparatory steps:

- Press the REPRO [39] key (only on models with output selector switches)
- Actuate the **"adj"** [16] key. The following picture appears on the display [22]:

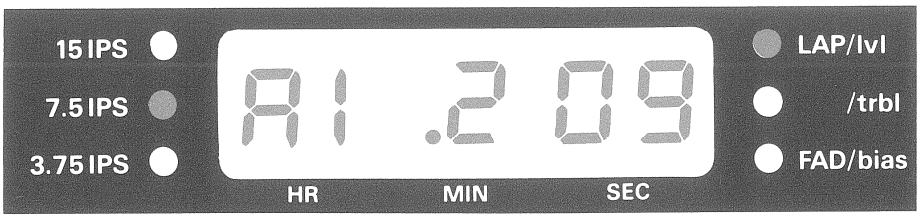

- Select the preferred studio speed.

If existing:

Select the READY [36/56] key (the red LED should not flash).

- Deselect all UNCAL [42/49] keys so that calibrated level can be set.
- Deselect Mono [55] by simultaneously pressing shift and mono.
- Set the programmable keys [53/54] TC-Units [60] to the desired calibration mode:
- NAB or CCIR equalization
- Tape type A or B (Tape A / Tape B)

- Reproduce head left or right (HEAD A / HEAD B)
- Connect the AF millivoltmeter to the XLR output to be calibrated, possibly terminated with 200 or 600 ohm (factory termination 10 kΩ).
- Mount the corresponding reproduce calibration tape and play the level tone section.

Adjustment procedure:

- Read the output level and set the desired operating level with the aid of the **up** or **down** [27/26] keys.
- Save the found value by pressing the **store** [19] key.
- On stereo models connect the millivoltmeter to the line output channel 2. Press the channel [20] key for switching to channel 2(resp. 3 and 4 ba 4-channel version) display [22] shows: A2. XXX. Set the desired operating level with the **up** or **down** key. Press **store**.

The factory calibrates the machine to the following reference tape flux values:
for NAB calibration the internal level of 0.775V corresponds to 0VU and to an operating level of 1.23V on the output of mono and stereo units.

3,75	ips	200 nWb/m
7,5	ips	250 nWb/m
15	ips	250 nWb/m
30	ips	250 nWb/m

For CCIR calibration a reference level of +6 dBu corresponds to 1.55 V at the output of mono and stereo units (VU-meter reading: 6VU).

for:	Stereo	Mono
9,53 cm/sec.	400 nWb/m	250 nWb/m
19,05 cm/sec.	510 nWb/m	320 nWb/m
38,1 cm/sec	510 nWb/m	320 nWb/m
76,2 cm/sec.	510 nWb/m	320 nWb/m

If the desired tape flux does not correspond to the one on the available calibration tape, the difference can be computed by means of the formula in paragraph 4.2.5 or be derived from the table (Fig. 4.2.2).

Important:

If the desired magnetic flux is higher than on the available calibration tape, the value obtained from table 4.2.2 must be subtracted from the desired line level.

Example:

Desired setting	510 nWb/m = +6 VU = +6 dBu line level.
Available calibration tape:	320 nWb/m
Difference	▲U = 4 dB
The line level to be set is therefore:	+6dBu - 4dB = +2dBu
Indication:	+2 VU

4.4.2 Azimuth alignment

Spool the reproduce calibration tape forward to the azimuth alignment section.

The head gap is adjusted by swivelling the reproduce head. For this purpose the calibration tapes contain an azimuth alignment section that has been recorded with a tape flux that is down by 10dB (20dB).

The objective of the adjustment is to achieve the maximum output voltage at the head gap reference frequency (10 kHz on CCIR calibration tapes, 8 or 16kHz on NAB calibration tapes). The adjustment is most accurate when performed at the slowest speed.

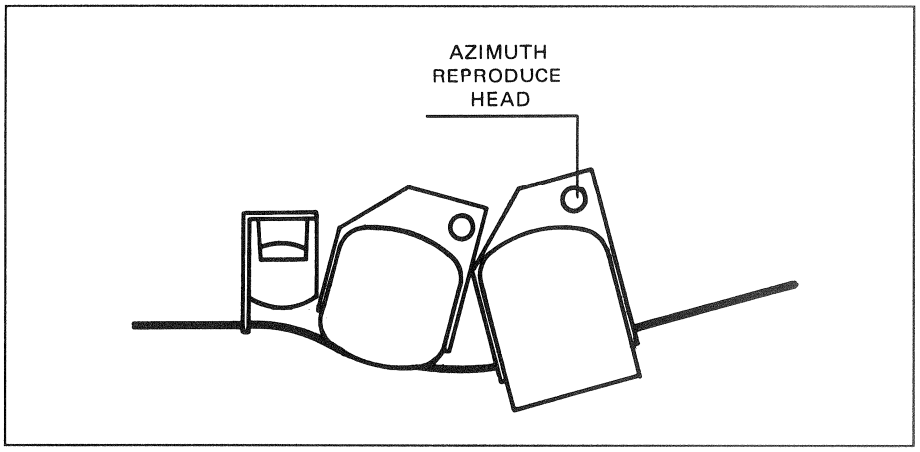

Fig. 4.4.2

Coarse adjustment:

While the recording with reference frequency is being played, adjust the reproduce head until the highest output voltage is achieved.

Fine-adjustment:

Connect the line outputs of both channels either:

- to the inputs of a 2-channel oscilloscope. While a recording with 8, 10, or 16kHz is being played, align for minimum phase difference of the output signals on the audio channels with the aid of the azimuth adjustment screw, or
- to the inputs of an AF millivoltmeter with summation facility. While the recording with 8, 10 or 16kHz is being played, align for maximum level of the sum of the audio channels with the aid of the azimuth adjustment screw.

On 4 channel machines first adjust channels 1 and 2 and then make the fine correction with channels 3 and 4.

Minor deviations in the gap position can occur between the calibration tapes of different manufacturers or for different tape speeds. We therefore recommend to optimize for the most frequently used speed.

Important:

Always adjust for maximum level and then to minimum phase difference! If major adjustments are made to the reproduce head, other maxima but with lower levels can occur. Check: measure the phase with a slightly changed frequency (½ octave).

Level check:

- Rewind the calibration tape to the LEVEL TONE section and switch the machine to play mode.
- Check the level of channels 1, 2 and 3, 4 resp. Correct it, if necessary.

4.4.3 Reproduce treble adjustment

- Spool the calibration tape forward to the FREQUENCY RESPONSE
- 16 kHz section (applies to 30 ips;
- 14 kHz for 15 ips;
- 12.5 kHz for 7½ ips).

The level of this section is approx. 20 dB (CCIR) lower than in the level tone section.

- Connect the millivoltmeter to the line output channel 1.
- Start the tape recorder in play mode.
- With the **channel**[20] key, select the channel to be calibrated (A1 .XXX appears on the display [22] for channel 1).
- Press the **param** [18] key so that the red "trbl" LED on the right-hand side of the display [22] lights up.
- Alignment to optimum frequency response is possible with the **up** and **down** keys [27/26].
- Press **store** [19] to save the setting.

Note:

These frequencies are intended as reference points for matching the high frequencies to those of the line level. These are empirical values for which a more or less linear frequency response should result. The final setting should be made individually for each unit in such a way that when the entire frequency response test is played from tape, a linear, symmetrical pattern (deviation from the desired value identical in the positive and negative area) is obtained, regardless of the reference frequency.

On stereo machines connect the millivoltmeter to the line output channel 2 resp. 3 and 4. Press the **channel** [20] key, the display shows A2 .XXX. With the **up** or **down** key align for optimum frequency response. Press **store**.

Bass adjustment:

The A807 tape machine is not equipped with a bass trimmer potentiometer.

Note:

If the optional test generator is installed, reproduce levels 10 or 20 dB below the reference level can be amplified in the 10 or 20dB setting by this amount so that they can again be adjusted to 0 VU with the aid of the VU-meter.

4.5 Record alignment

4.5.1 Adjusting the erase current

- Mount a blank tape
- Press the ready keys [36], the red LEDs flash.
- Start the machine in record mode.

Adjustment procedure:

Turn R139 on the AUDIO ELECTRONICS PCB 1.727.460/461/462/463/467/468/-469 (GR 41 or GR 42) to the minimum.

- Connect the oscilloscope or the HF voltmeter to TP 4 (0 V to TP 2).
- With the trimmer T3 adjust the voltage on TP 4 to the minimum. A screwdriver with a narrow blade is needed for this purpose.
- Connect the HF voltmeter to TP 3 (0 V to TP 2) and adjust to the following values with the aid of R139:

2-Channel erase head	44V
Mono erase head	66V
4-Track 2-channel erase head	36V
4-Track ½" erase head	38V
2-Track ½" erase head	53V

Note:

- On 2-channel units with separate erase head, the adjustments must be performed on both channels. On 4-channel versions on all 4-channels.
- On 2-channel units with mono erase head, jumper W1 must be removed on the AUDIO ELECTRONICS PCB 1.727.670/671 (GR 40). In this case the adjustments for channel 2 are made on the AUDIO ELECTRONICS PCB 1.727.460/461/462/463/467/468/469 (GR 42).

4.5.2 Adjusting the bias trap

- Insert the tape and start the machine in record mode.

Adjustment procedure:

- Connect the HF voltmeter to TP6 (0V to TP2) of the AUDIO ELECTRONICS PCB 1.727/460/461/462/463/467/468/469 (GR 41 or GR 42 respectively).
- With the trimmer screw on L3, adjust the voltage to the minimum; a screwdriver with a plastic blade is required for this purpose.

Note:

On all 2-channel machines, the channels must be aligned individually.

AUDIO ELECTRONICS 1.727.470.XX GRP 41 or 42

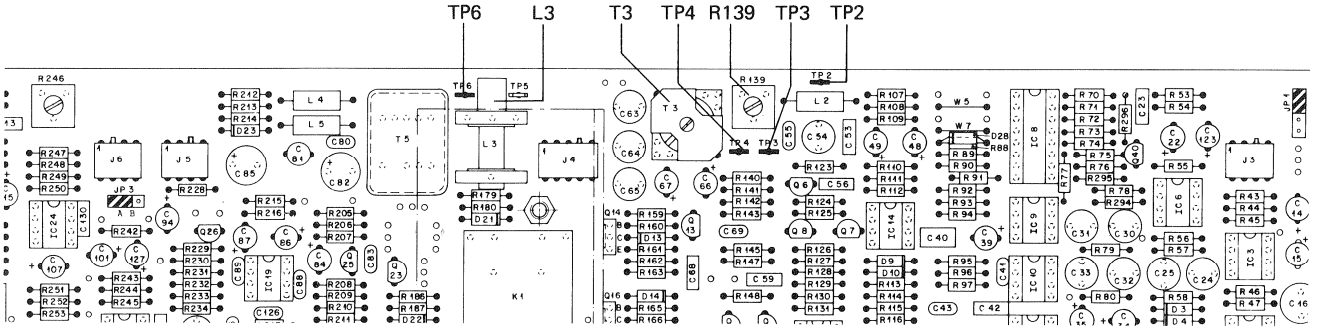

Fig. 4.5.1

4.5.3 Record audio alignments

Preparatory steps:

- Actuate the "**adj**" key the display shows: **A1 .xxx**
- With the **channel**[20] key, select the channel to be measured.A1 .XXX on the *display [22] means channel 1.*
- With the **param** [18] key, select the "lvl" position; the "lvl" LED on the right-hand side of the display [22] lights up.

If existing:

- Select the REPRO [39] key
- Release all UNCAL [42/49] keys to switch to calibrated level
- Deselect Mono [55]
- Select the LINE ON [43] keys
- Deselect the MIC ON [44] keys (the yellow LEDs should be dark)
- Press the READY [36] keys (the red LEDs flash) Install a new or practically new tape of the desired type.

With the keys [53/54] for TC-units [60]:

- Select the correct equalization(NAB or CCIR), or
- Select the correct tape type A or B, or
- Select the reproduce head (head A).
- Connect the AF generator with 1 kHz and operating level to the line input channel 1 (on stereo to CH 1 + 2), and connect the millivoltmeter to the line output of channel 1. For NAB calibration feed a reference frequency of 700 Hz.

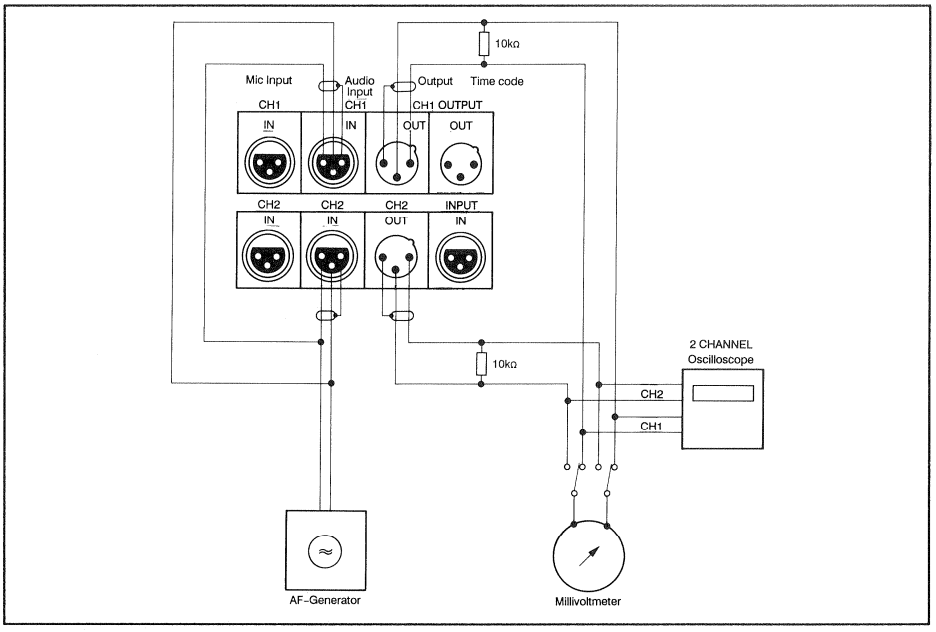

Fig. 4.5.2

4.5.4 Record preadjustment

- With the **parameter** [18] key select the level adjustment function, i.e. the "lvl" LED on the right-hand side of the display [22] should be light.
- With the **channel**[20] key, select the channel to be calibrated (A1 .XXX = channel 1, A2 = channel 2, A3 = channel 3, A4 = Channel 4)
- Start the machine in record mode.
- Read the output level and adjust to operating level by pressing the **up** or **down** [27/26] key.
- Press store [19].

On stereo machines connect the mv-meter to output 2. Press the **channel** key (display shows A2). Adjust to operating lvl with the **up/down** key. Press **store**.

4.5.5 Aligning the azimuth of the record head

- Switch the audio generator to 10 kHz and decrease the level by 20 dB (or if available, set the test generator to the -20 dB position).
- Connect the millivoltmeter to the line output channel 1.
- Start the machine in record mode.

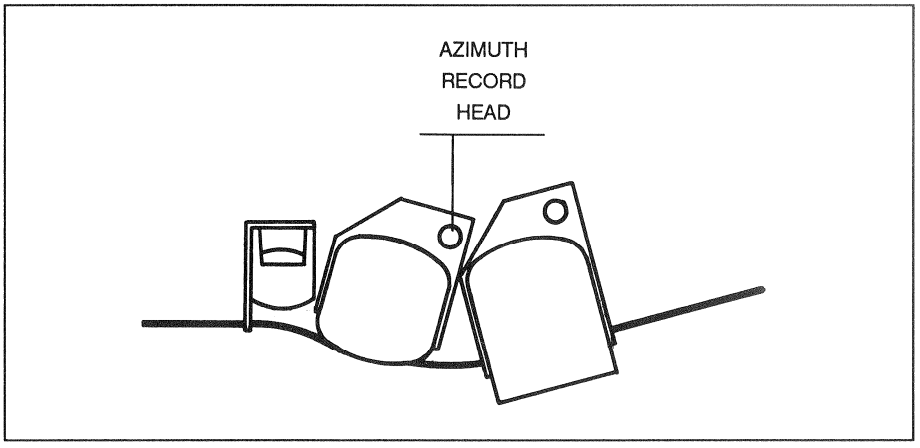

Fig. 4.5.3

- With the azimuth alignment screw, adjust the position of the record head until the highest output voltage and simultaneously the lowest level fluctuations are attained.

If major corrections are made with the azimuth alignment screw, the record preadjustment (Section 4.5.4) must be repeated.

Note:

If the bias has not been adjusted yet, the bias parameters of 2-channel and 4-channel machines should be set to the same or at least similar values for both resp. 4-channels, refer to 4.5.6.
(Reason: the mechanical and the "electrical" head/gap of the record head are not in the same location; the offset depends on the magnitude of the bias current. For this reason an azimuth correction is made after the bias adjustment).

4.5.6 Bias adjustment

- Audio generator at 10 kHz and level 20 dB below operating level. Connect the millivoltmeter to the line output channel 1.
- Start the machine in record mode.
- With the **channel** key select the channel to be calibrated (A1 = channel 1).
- Press the **param** [18] key repetitively until the red bias LED on the right-hand side of the display window [22] lights up.
  (Note: only possible when the machine is in record mode).
- Press the **down** [27] key repetitively until the value A1 000 appears on the display. Then search the maximum output voltage with **up** [26] and write down this value. Continue with **up** until the output voltage drops by the value U (dB) specified in the bias Table (at the end of this Section). This value depends on the tape type and the speed. (See table 4.10)
- Press **store** [19].

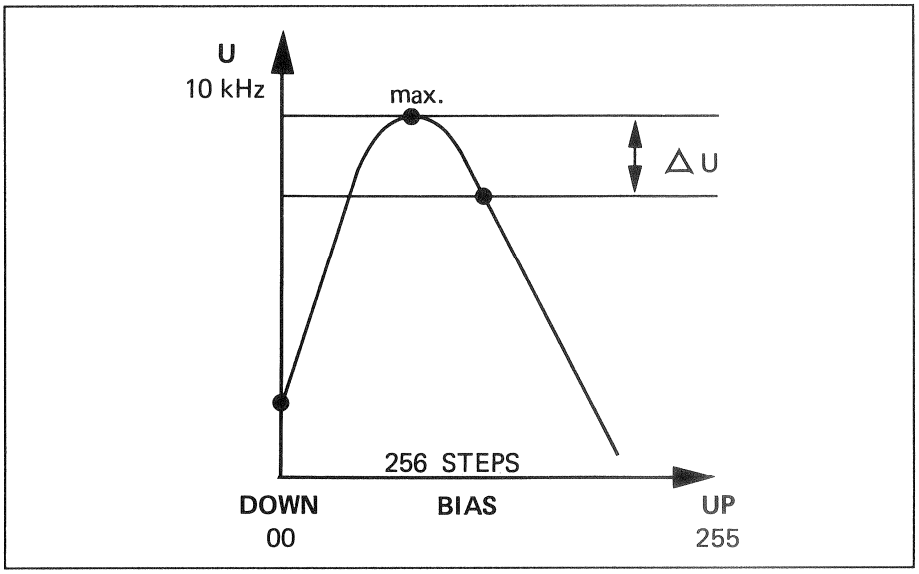

Fig. 4.5.4

On stereo machines connect the millivoltmeter to the line output channel 2. Press the **channel**[20] key (A2 .XXX appears on the display [22]).
Perform the bias adjustment as specified for channel 1. Press **store**.
On 4-channel versions adjust the same for channel 1 and 4.

4.5.7 Azimuth alignment STEREO

On stereo machines, the output signals on channels 1 and 2 are adjusted to minimum phase difference with the aid of the oscilloscope and by carefully turning the azimuth alignment screw of the record head.
On 4-channel versions to the min. phase difference between channel 3 + 4.

4.5.8 Record level adjustment

- Set audio generator at 1kHz (possibly 700Hz for NAB, 333Hz for 3 3/4 ips), and operating level.
- Connect the millivoltmeter to the line output channel 1.
- With the **channel** [20] key select the channel to be calibrated (A1 = channel 1).
- Repetitively press the **param** [18] key until the red "lvl" LED on the right-hand side of the display window [22] lights up.
- Start the machine in record mode.
- With the **up** or **down** [27/26] adjust the output level to operating level.
- Press **store** [19].

On Stereo machines connect the millivoltmeter to the line output channel 2. Press **channel** [20] (A2 .XXX appears on the display [22]). With the **up** or **down** key adjust the output level to operating level.

- Press **store**.

On 4-channel versions the same for channel 3 + 4.

4.5.9 Frequency response alignment

- Set the AF generator to operating level -20 dB.
- Connect the millivoltmeter to the line output channel 1.
- With the **channel** key select the channel to be calibrated (A1 = channel 1)
- Repetitively press the **param** key until the red "trbl" LED lights up.
- Start the machine in record mode.
- With the **up/down**, align for optimum treble frequency response (1 kHz):

The reference points for matching the treble frequency to the reference level are specified in the following table. These are empirical values which produce a more or less linear frequency response.

Tape Speed [cm/s.]	Tape Speed [ips]	Adjusting Frequency [kHz]
9,5	3,75	8
19	7,5	10
38	15	12,5
76	30	16

Fig. 4.5.5

The final adjustment should be made individually for each machine in such a way, that with a continuous increase of the input frequency a linear, symmetrical pattern (deviation from the desired value identical in the positive and the negative area) is attained, regardless of the above alignment frequencies, press **store**.

Stereo models:

- Connect the millivoltmeter to the line output channel 2.
- Press the **channel** [20] key (A2 .XXX appears on the display).
- Start the machine in record mode.
- With **up/down** align to optimum treble frequency response (above 1 kHz).
- Press **store** [19].

On 4-channel versions the same for channel 3 + 4.

4.5.10 Adjusting the cross talk on 2-channel stereo machines

- Switch both channels on REPRO [39].
- Connect the audio generator (operating level, 1kHz) to the line input channel 1;
- connect the millivoltmeter (preferably a selective meter because the value is within the noise level) to the line output channel 2.
- Switch both channels to READY and start the machine in record mode.
- With the CROSSTALK poti on the audio base board 1.727.670/671/672/681 align for minimum output voltage. Repeat the same measurement with swapped channels. If large deviations occur, find an optimum value for both channels.

AUDIO CONTROL 1.727.672.00 GRP40

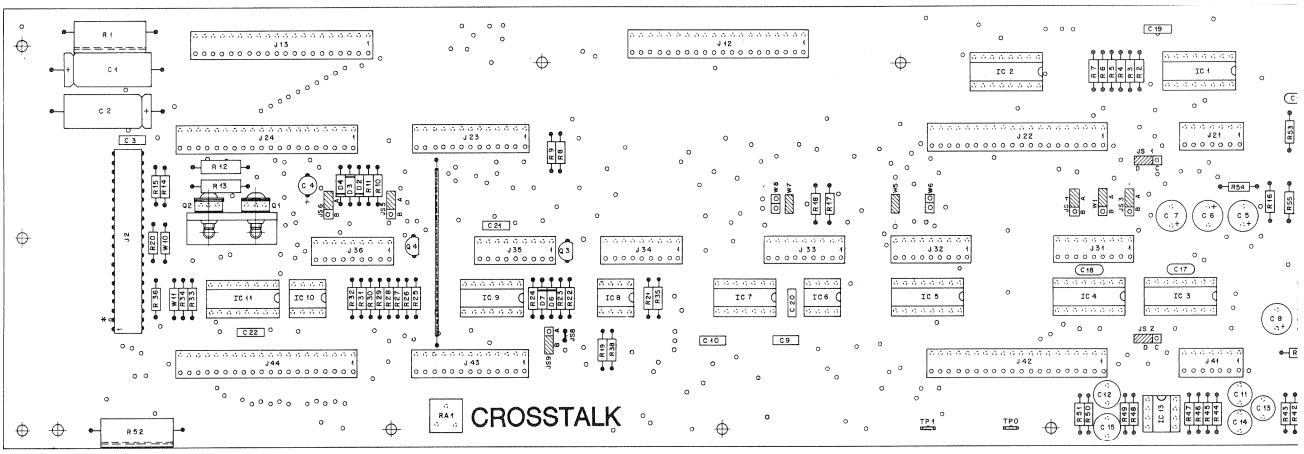

Fig. 4.5.6

4.5.11 Adjusting the cross talk on 4-channel machines

- Switch all channel to REPRO [39].
- Connect the AF generator (operating level, 1 kHz) to line level channel 2. Do not feed input level to the other channels.
- Connect the millivoltmeter (preferably a selective meter because the value is within the noise level) to the line output channel 3.
- Switch all four channels to record and start the tape recorder in record mode.
- Adjust to minimal output voltage with the cross talk potentiometer R40 on the circuit board 1.727.681.
- Connect the AF generator (same level) to the line input channel 1 and connect the selective meter to channel 2. Start the machine in record mode and adjust for minimum output voltage with the cross talk potentiometer R39.
- Line input on channel 3, millivoltmeter on channel 4, and align for minimum output voltage with R41.
- Check for possible cross talk into the adjacent channels and make slight corrections, if necessary.

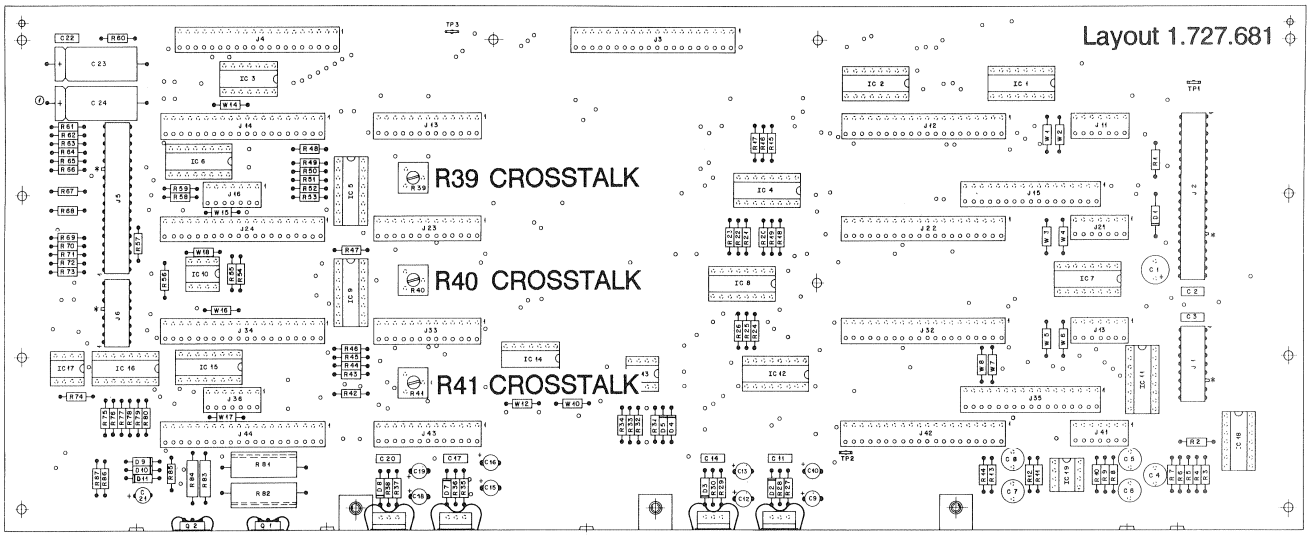

Fig. 4.5.7

4.6 Sync alignments

4.6.1 Preparations

- Connect the millivoltmeter to the line output channel 1.
- Switch on the tape recorder.
- Select the tape speed, equalization, tape type, and the corresponding reproduce head with the keys [53/54] for TC-units [60]
- Deselect READY [36] (the red LEDs should not flash).
- Press the SYNC keys [38/58] of Ch 1 or Ch 2.
- Release all UNCALL keys [42/49] (cal. level).
- Mount a reference tape of the corresponding speed and spool forward to the LEVEL TONE SECTION.

4.6.2 Sync reproduce level adjustment

- With the **channel** key select the channel to be calibrated (A1 = channel 1).
- Repetitively press the **param** [18] key until the red "lvl" LED on the right-hand side of the display window [22] lights up.
- Start the machine in play mode.
- Read the output level and adjust to operating level by pressing the **up** or **down** [27/26] key.
- Press **store** [19].

- On stereo machines connect the millivoltmeter to the line output channel 2.
- Press the **channel** [20] key (the display shows **A2** for channel 2).
- With the **up** or **down** key align to operating level.
- Press **store**.

On 4-channel versions the same for channel 3 + 4.

4.6.3 Sync frequency response alignment

- Spool the reference tape forward to the FREQUENCY RESPONSE section. The level of this section is approx. 20 dB below the level tone section.
- Connect the millivoltmeter to the line output channel 1.
- Press the **channel** [20] key so that A1(=channel 1) appears on the display.
- Repetitively press the **param** key until the "trbl" LED on the right-hand side of the display window [22] lights up.
- Start the machine in play mode.
- With the **up** or **down** [27/26] key align for optimum frequency response.
- Press **store** [19].
- On stereo machines connect the millivoltmeter to the line output channel 2.
- Press the channel[20] key (the display shows **A2** for channel 2).
- With the **up** or **down** key align to optimum frequency response.
- Press **store**.

On 4-channel versions the same for channel 3 + 4.

Bass-Sync:

Normally the studio tape recorders are calibrated with full-track reference tapes. Bass frequency response errors occur on stereo and 2-channel machines due to fringing.

Note:

- There are no trimmer potentiometers for the bass frequencies.

SYNC frequency response

For this reason the sync reproduce frequency response for the bass frequencies should be checked with tape.
The sync reproduce frequency response should be repeated with a user produced test tape, if no reference tapes with the correct guard track width are available (approx. 3 minutes each:

9,5 cm/s	19 cm/s	38/76 cm/s
6 kHz	8 kHz	1 kHz 10 kHz 50 Hz (NAB 700 Hz)

To minimize cross talk (considerable at high frequencies) from the record channel into the SYNC reproduce channel, the frequency response has been limited.
The following cutoff frequencies result:

Frequency response, sync track reproduction :

	3,75 ips 9,5 cm/s	7,5 ips 19 cm/s	15 ips 38 cm/s	30 ips 76 cm/s
±2 dB	40 Hz...5 kHz	40 Hz...10 kHz	40 Hz...12 kHz	50 Hz...12 kHz

4.7. Time code alignments: electrical

Service tools:

The following tools are required for the electrical alignments:
- Time code reference tape (15 ips) part number 10.206.070.00.
- Time code generator and time code reader, preferably with two inputs and time code differential measurement.
- Oscilloscope

Important:

For all time code alignments, soft jumper 15 must be in position "0" (time code electronics active) in order to prevent any time offset between the audio and the time code. (Also refer to Soft jumper in Section 2.5.2).

Time code record/repro

- No alignments are necessary for time code reproduction.
- The following must be adjusted before the time code is recorded:
  - Input sensitivity
  - Bias and record aligned
  - Record level

4.7.1 TC reproduce

- Check the soundheads for contamination and clean them, if necessary.
- Remove the back panel
- Connect the oscilloscope probe to the test point TP of the time code read-write unit. Accessible through the cut-out in the cover.
  (Connect the ground to TP3 of the time code processor unit).

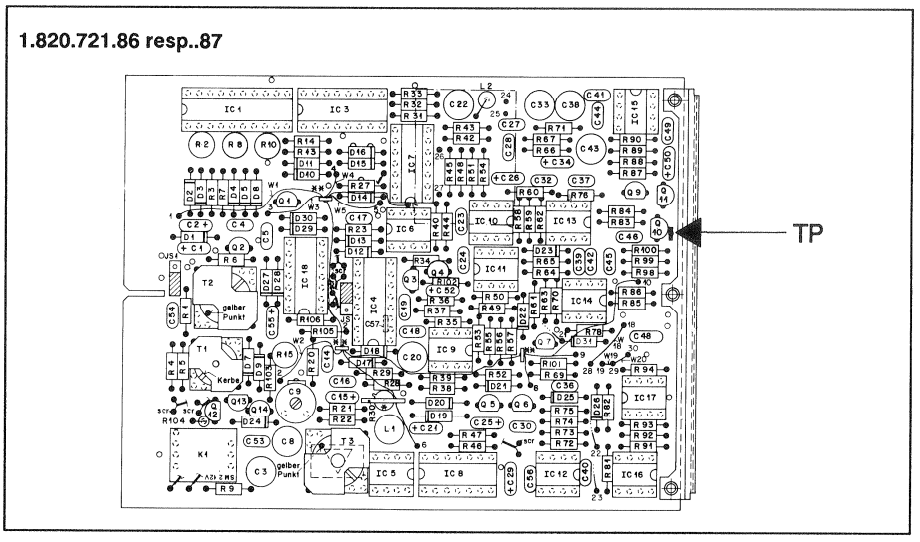

Fig. 4.7.1 TC read write unit 1.820.721 (see also Fig. 4.7.2)

- Connect the time code reader to the time code line output.
- Mount the time code reference tape (10.206.070.00), recording inhibited (SAFE) and play section 3 at 15 ips).
- Check that the +3 dB, 0 dB and -3dB signals are read properly. The -10dB signal does not have to be read because of the time code reader input sensitivity. The signal on the test point TP, however, should still be clean and visible on the oscilloscope.

Measuring the time code reproduce level:

- Connect the oscilloscope probe to the test point "TP" of the time code read/write unit.
  Connect the ground to TP3 of the TC processor unit (see Fig. 4.7.2).
- Play section 4(TC reference level) of the time code reference tape at 15 ips.

Read the time code reproduce level (peak/peak) on the oscilloscope and write down the value (<150 mV)

- Change the speed to 7,5 ips, measure the level again and write down the value.
- If applicable: Change the speed to 3,75 ips and measure the time code reproduce level.

Note:

For 30 ips write down the same value that was measured at 15 ips.

4.7.2 Time code recording

Input sensitivity:

Aligning the trigger level for the time code input signal:

- Switch the tape recorder on.
- Connect the time code generator directly to the oscilloscope and lower the generator level until the lowest desired input level is attained at which a time code recording should still be possible.
  - Lowest possible input sensitivity: 150 mVpp
  - Factory setting 0.45 V ±0.05 V

- Connect the time code generator to the time code line input of the tape recorder and turn R15 on the time code read/write unit to the counterclockwise limit position (see Fig. 4.7.2).

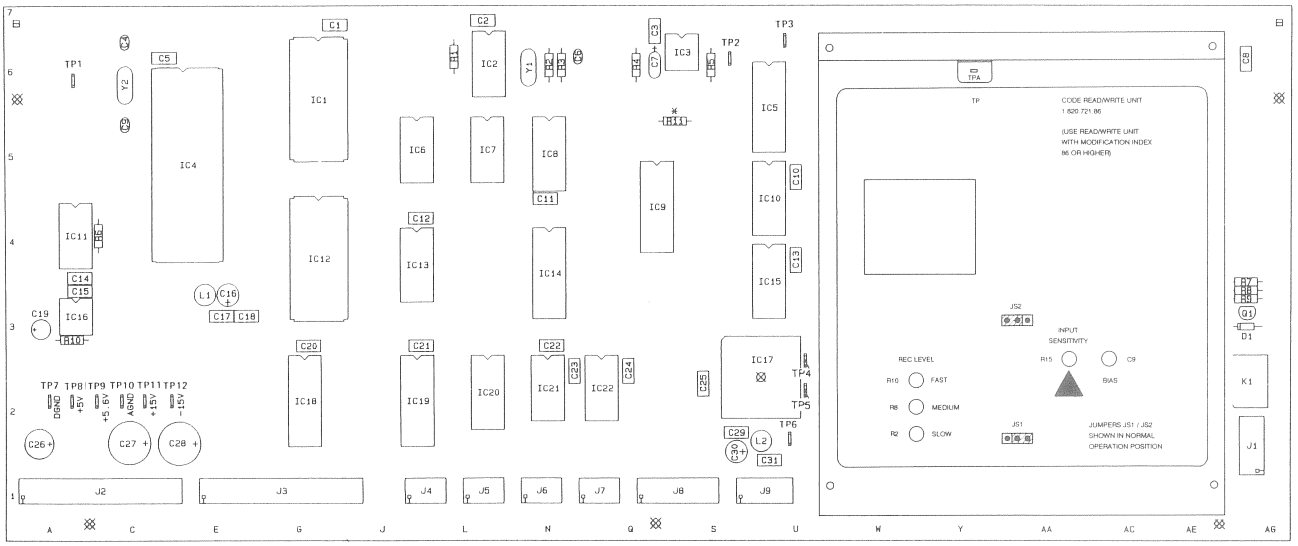

Fig. 4.7.2 Time code processor board 1.727.710

- Turn R15 clockwise until the TC pilot LED just lights up.

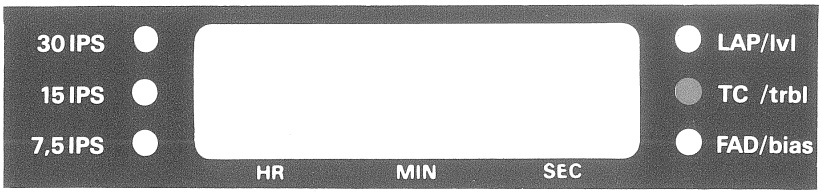

4.7.3 Bias alignment

- Mount a new or practically new, unrecorded tape.
- Adjust the bias trimmer C9 to minimum capacitance.
- Press the time code READY key. (Press SHIFT- [23] and READY [56] keys simultaneously)
- Switch the time code channel selector to REPRO [58] (LED dark).

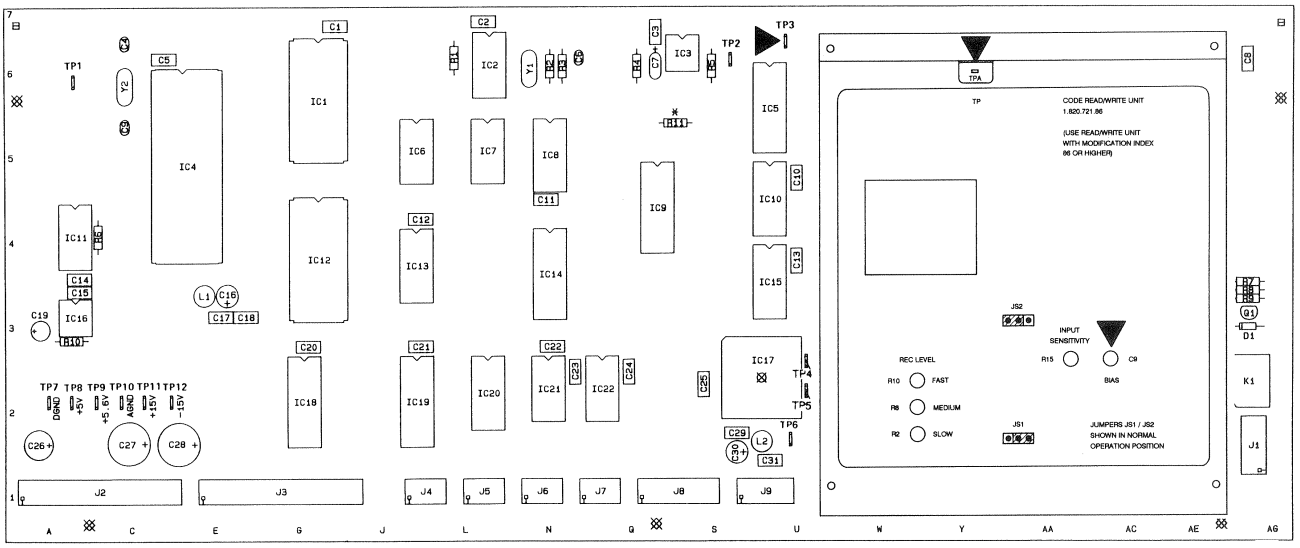

Fig. 4.7.4

- Connect the time code generator with approx. 2 Vpp to the time code line input.
- Start the machine in record mode. During the recording increase the capacitance of C9 gradually in intervals of 10 seconds until the rotor is plunged in by approx. 45°. In this way a recording with different bias values is created.

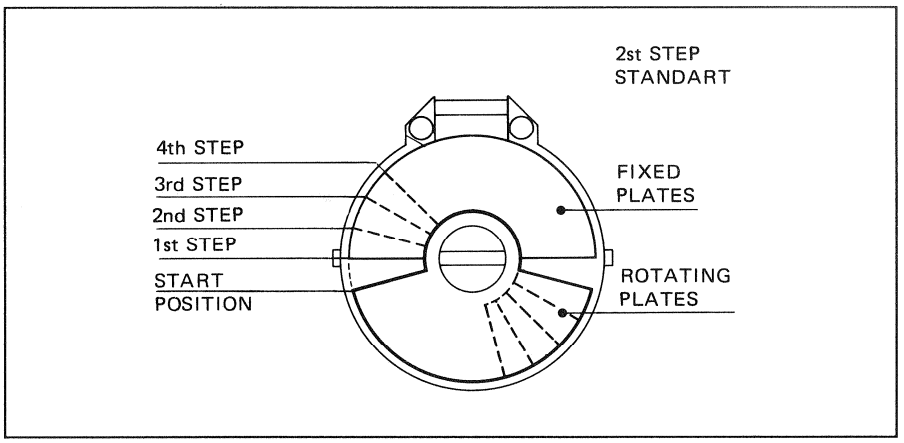

Fig. 4.7.5

- Rewind to the start of the recording
- Connect the oscilloscope to the test point TP of the time code read/write unit. Connect the ground of the oscilloscope probe to TP3 of the time code processor unit.

- Switch the machine to PLAY mode.
- During the playback write down the position in which the output amplitude is the highest.
- Restore C9 to this position.
- Restart the machine in record mode. Adjust C9 in small increments to the previously noted position.
- Determine the optimum position of C9 through several experiments, i.e. maximum amplitude and steep signal edges.

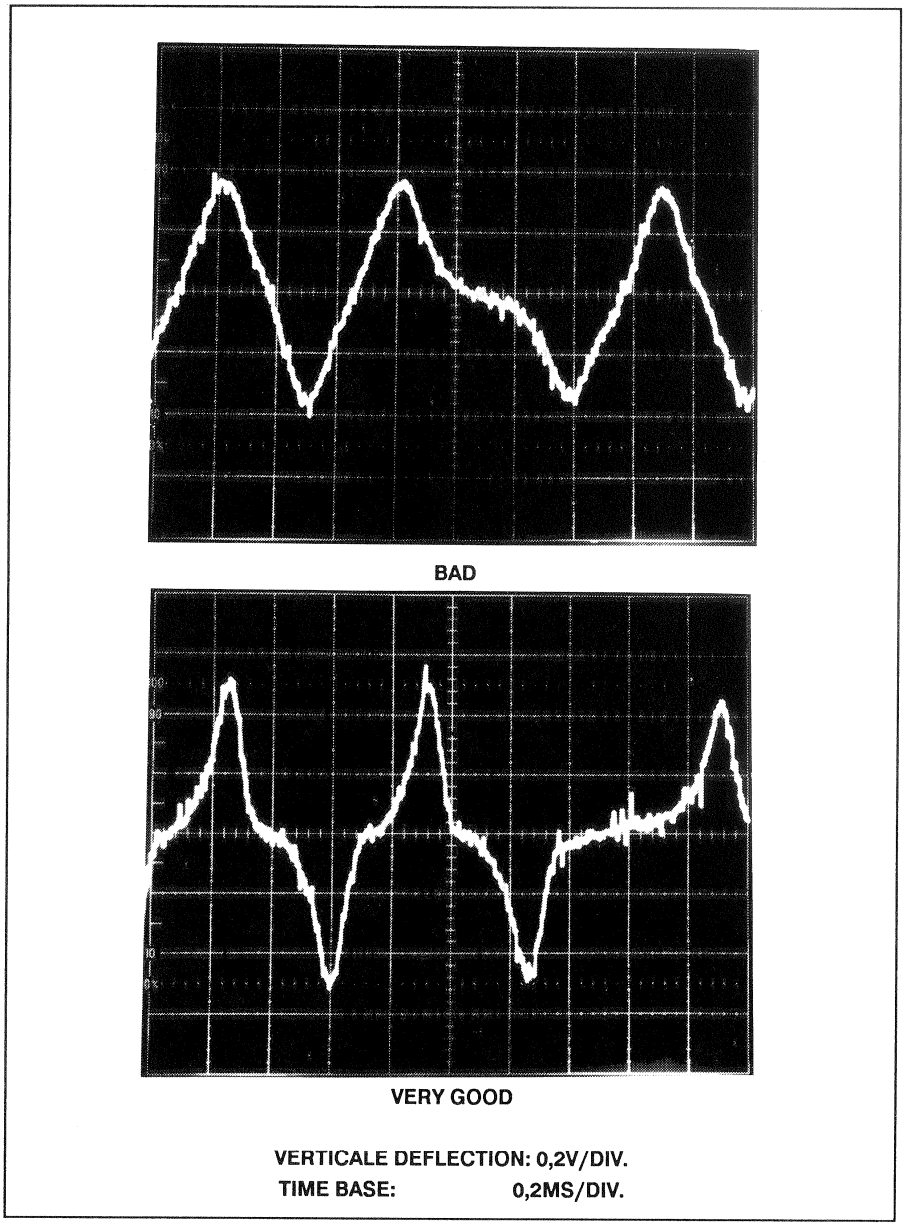

Fig. 4.7.6

4.7.4 Aligning the record level

With the trimmer potentiometers R10 for the high, R8 for the medium, and R2 for the low speed adjust the record level in such a way that the previously determined and noted reproduce level (see 4.7.1) is available on the test point TP.

Procedure (for each tape speed):

- Mount a new or practically new, unrecorded tape of the preferred tape quality.
- Connect the oscilloscope to the test point TP of the time code read/write unit (ground: to TP3 of the time code processor unit).
- Switch the channel selector to READY. For this purpose press the SHIFT [23] key and simultaneously the time code ready [56] key.
- Switch the time code to REPRO. (Simultaneously press SHIFT [23] and REPRO [58] so that the LED on the right is not light).
- Start the machine in record mode and record the time code during approximately 20 seconds (input signal approx. 2 Vpp).
- Rewind to the start of the recording. Switch the tape recorder to play mode. The voltage on the test point TP should be the same as the one determined according to Section 4.7.1.
- Repeat the procedure several times until this value is attained.

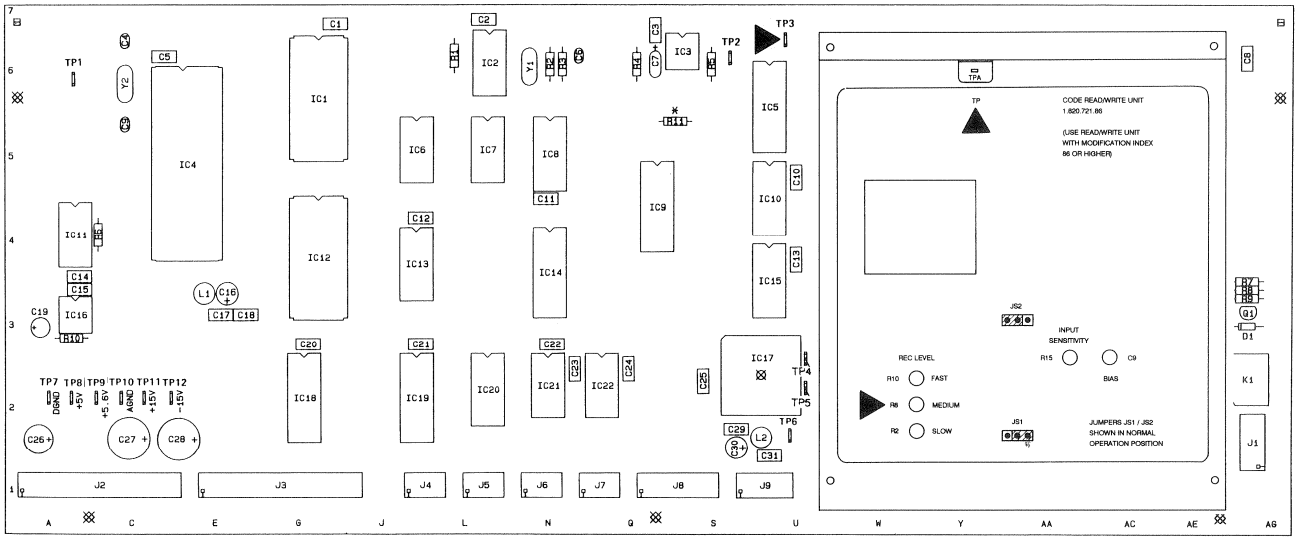

Fig. 4.7.7.

4.8. Checking the gap position of the TC head

For compensating the mechanical distance between the time code head and the corresponding audio head, the microprocessor calculates from the TCIA isolated input time code signal (IC1.7 = time code interface adapter) the current time code according to the following logic:

- For TC recording the current head distance delay is added.
- For TC reproduction the current head distance delay is subtracted.

4.8.1 Adjustment of head gap position: reproduction

Precondition:

The offset measurement makes sense only when the electrical alignments according to Section 4.7. and the mechanical adjustment according to 4.9 have been made.

- Connect the time code line output and the line output of one of the two audio channels to a time code reader with differential indication facility.
- Mount the time code reference tape (10.206.070.00), spool to Section 2 (full-track time code) and start the machine in play mode, tape speed 15 ips.
- Switch both audio channels to REPRO [39].
- Switch the time code channel to REPRO. Simultaneously press SHIFT [23] and SYNC [58] so that the yellow LED does not light up.
- Spool the time code reference tape 10.206.070.00 to Section 2 (full-track time code) and switch the recorder to play mode, tape speed 15 ips.
- The offset should not exceed

- 2 ms for 30 ips
- 2 ms for 15 ips
- 4 ms for 7,5 ips
- 6 ms for 3,75 ips

Alignment:

If these values are exceeded, the offset can be changed by turning the time code head.

Azimuth alignment SYNC

- Switch both audio channels to SYNC [38].
- Simultaneously press SHIFT [23] and SYNC [38] to switch the time code channel to SYNC (yellow LED should be light).
- Repeat the offset measurements in SYNC mode.

Note:

Before you align the time code head, check the head face alignment of the audio heads, particularly if there are large differences between the reproduce and SYNC offset measurements.

- For reproduce offset: Check the audio reproduce head face according to Section 4.4.2.
- For sync offset: Check the audio record head face according to Section 4.5.5.

- If the tape wraps the head correctly, the offset values are usually within the above tolerances. For this reason it is not absolutely necessary to check it with the equipment listed above.

4.8.2 Adjustment of head gap position: record

- Switch the audio channels to READY [36].
  Switch the time code channel to READY (simultaneously press SHIFT [23] and READY [56]).
- Switch the audio channels with [38] and the time code channel with SHIFT [23] and SYNC [58] to REPRO (yellow LED should not be light).
- Connect the time code generator in parallel to an audio channel and the time code channel. Produce a recording of approximately 1 minute duration.
- Rewind to the start of the recording and start the machine in play mode. With the same device used for measuring the reproduce gap position, measure the offset between the audio channel and the time code channel.
- The offset should not exceed 2 ms (for 30 ips), 2 ms (15 ips), 4 ms (7,5 ips) or 6 ms (3,75 ips). If these values are exceeded, the offset can be reduced by turning the time code head.

Important:

After correction of the time code head position, a new recording should be made to check the adjustment!

- The tape should make symmetrical contact with the head face, it should not be pulled across one of the edges!
- Recheck the time code level from the reference tape.

4.8.3 Checking the time code reproduction in spooling mode

- Connect the time code generator to the TC line input.
- Select 7,5 ips tape speed.
- Make a recording with a duration of approx. 10 minutes
- Connect the time code reader to the TC line output.
- Switch the tape recorder to spooling mode. The recorded time code should be correctly read at maximum spooling speed in either direction.

If the time code is not read correctly (too many drop-outs), the right-hand time code head should be cleaned or possibly be repositioned. (Also realign the lifter).

Cleaning the code head:

- With a hard brush remove the deposits in the grooves and clean the head with soundhead cleaner.

Important !!

During the spooling process the CODE DELAY UNIT is automatically bypassed, i.e. the offset in spooling mode is always much greater than in play mode.

4.9 Mechanical adjustment of the time code head

Aids:

The following aids are required for the mechanical adjustments:

- Time code reference tape 15 ips (part number 10.206.070.00)
- Alignment gauge (part number 10.010.001.02)
- Reference block (part number 10.010.001.01)
- Optional: Magnetic iron oxide spray 10.555.001.00 and measuring magnifier 10.258.006.00)
- Grease pen 10.416.001.01

Notes:

- The adjustments are limited to the mechanical alignment of the time code head and are only necessary if the time code head has been exchanged.
- Because of the narrow time code track width (0.38 mm), accurate installation of the time code head is absolutely essential.

4.9.1 Mechanical home position

The time code head must be perpendicular to the tape path.
The perpendicularity of the head is aligned by shifting the wobble plate:

- For lateral inclination (refer to drawing A in Fig. 4.9.1) by means of the azimuth screw, and for
- Forward/backward inclination (refer to drawing B in Fig. 4.9.1) by means of the set screws.

Check:

The perpendicularity can be verified with the alignment gauge 10.010.001.02 and the reference block 10.010.001.01.

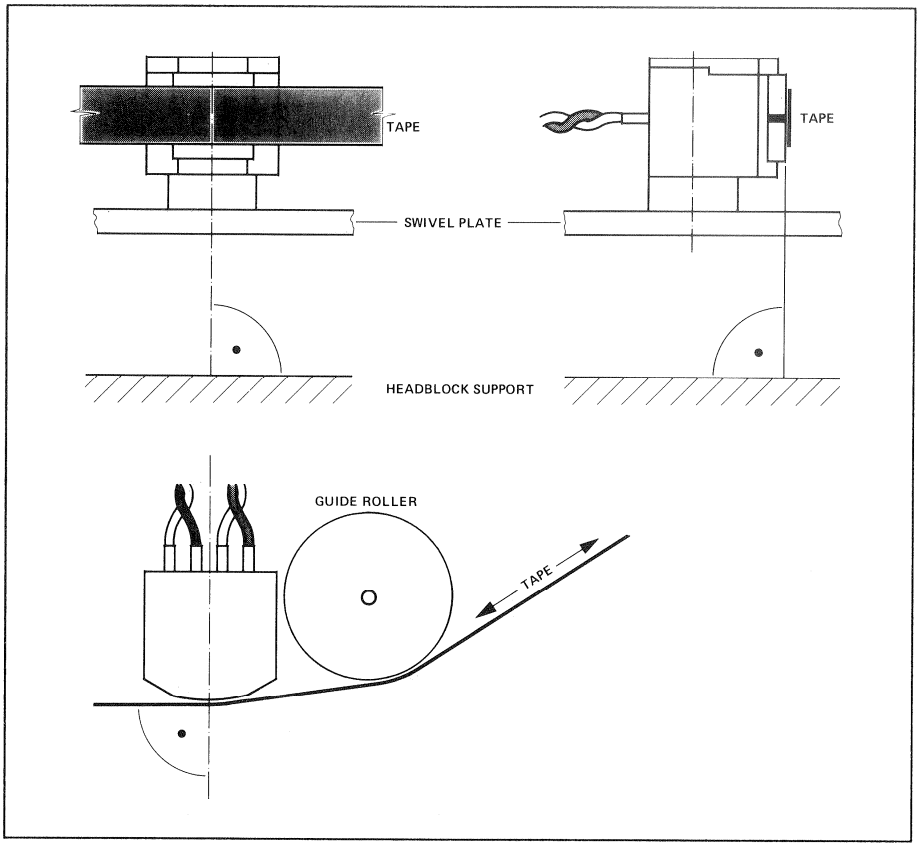

Fig. 4.9.1

4.9.2 Checking the height of the head

After a head change the height of the head should be checked and corrected, if necessary.
Three different methods are available:

- Visual check only
- By means of time code reference tape
- By calibrating the time code track

Visual check only

Make sure that the tape is drawn across the center of the time code head.
Since this check is a strictly subjective assessment, it serves only as an expedient.

With time code test tape

Preparatory steps:

- Remove the rear panel.
- Connect the oscilloscope to the test point TP of the time code read/write unit. (Access through the cut-out in the screening, see diagram below). Connect the ground to TP3 of the TC processor unit.
- Mount the time code reference tape 10.206.070.00 and play Section 1.

Check:

- With your finger alternately press lightly against the tape edge from the top and the bottom.
- The height setting is correct if voltage increases while you press in either direction.

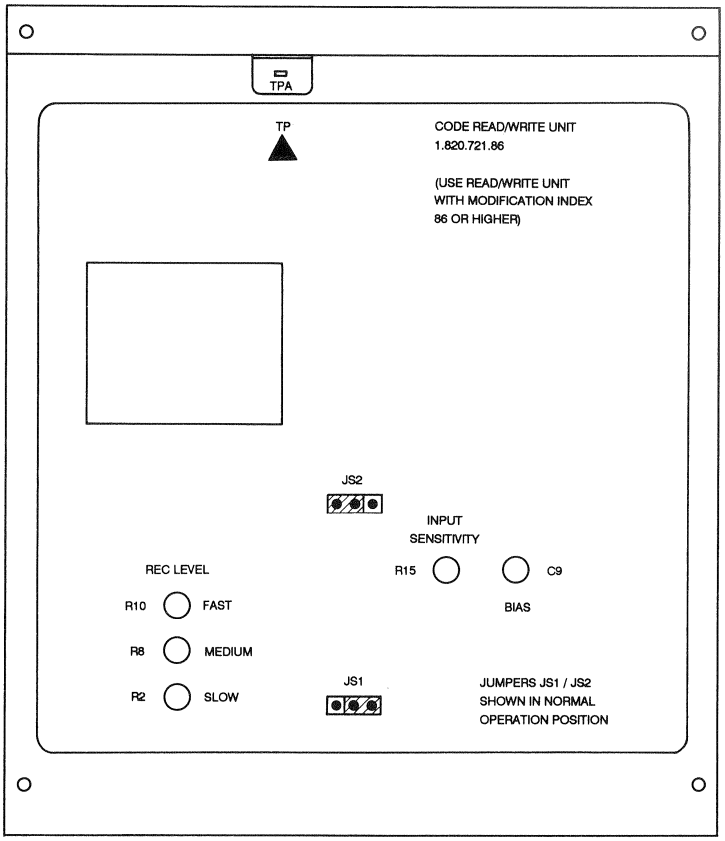

Fig. 4.9.2

By calibrating the time code track

- Mount a new or practically new, unrecorded tape.
- Select 15 ips tape speed.
- Connect the time code generator 2Vpp, 1 kHz to the time code input and produce a recording with a duration of approx. 10 to 20 seconds.
- Spray a few centimeters of the recorded tape (coated side facing upward) with iron oxide spray (MAGNETIC IRON OXIDE from AEROSOLS INTERNATIONAL LTD, part number 10.555.001.00).
- After the spray has dried, use a measuring magnifier to check the symmetry of the tracks.

If the deviation is greater than ±0.05 mm, the head height should be corrected. Repeat the recording and measurement until the symmetry is correct.

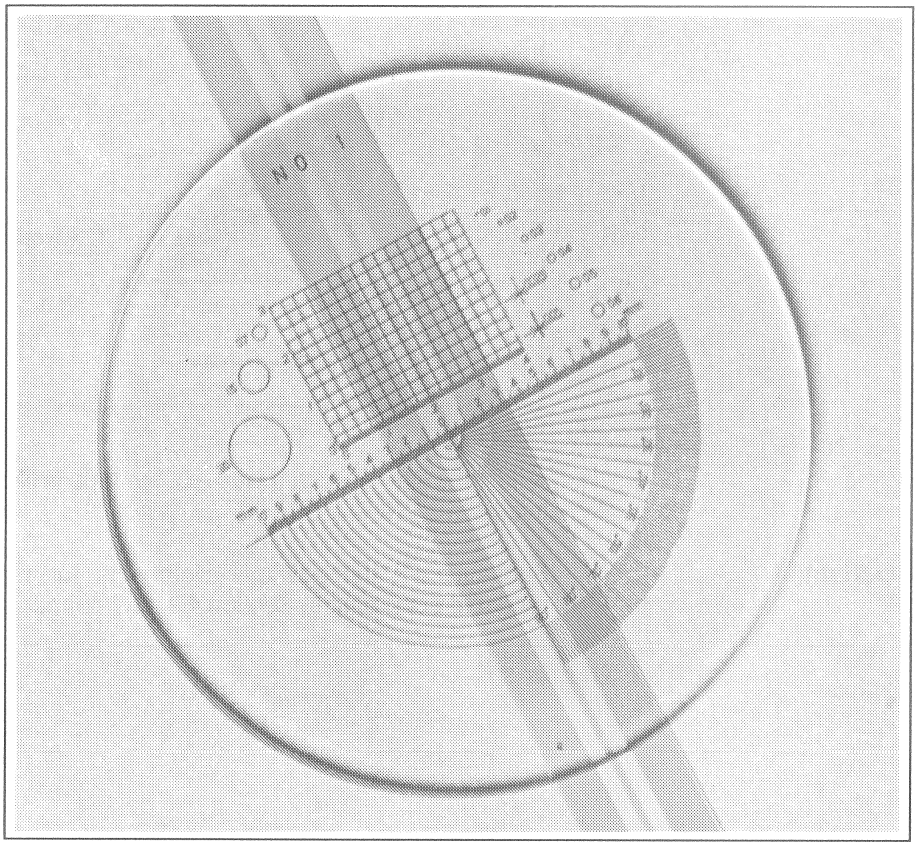

Fig. 4.9.3

Adjustment:

If necessary, the height of the head can be adjusted by turning the two set screws.

Please note:

Always adjust the two set screws in front and behind the time code head by the same angle of rotation.
After the head height has been adjusted, the mechanical home position must be rechecked (see 4.9.1).

4.9.3 Checking the tape lifter adjustment

Checking the head face of the time code head

- Color the right-hand section of the time code head with a grease pen (part number 10.416.001.01).
- Completely deflect the right-hand tape lift pin by hand and press one of the spooling keys. Release the tape lift pin.
  After approximately 1 to 2 minutes of spooling, completely deflect the tape lift pin by hand again, press the STOP key and check the head face.

The head gap should be within the wiped area.
If this is not the case, check the lifter setting according to 3.3.5.

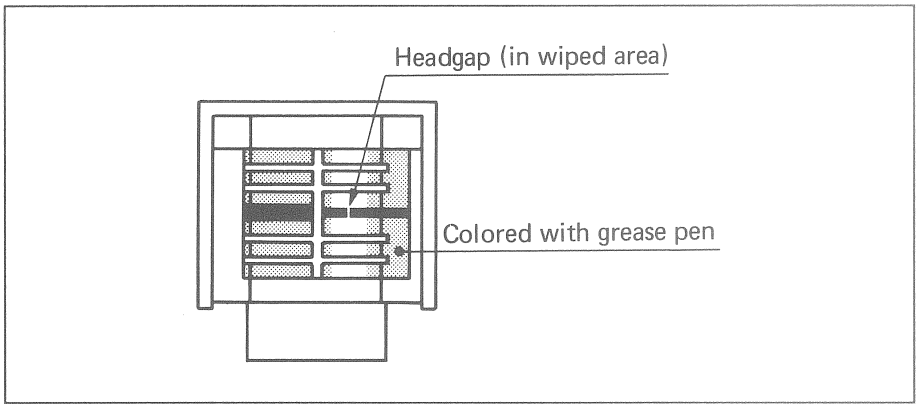

Fig. 4.9.4

Adjust the lifter in such a way that the tape is lifted only lightly off the audio record head.

Important:

Subsequently the azimuth alignments for reproduce and record should be repeated according to Section 4.8, and corrected, if necessary.

4.10 Mono/Stereo selector settings

A mono/stereo selector switch is available as on option. In this case the mono level must be aligned. A precondition for this alignment is that the recorder has been correctly calibrated in stereo mode.

4.10.1 Preparations

Set the jumper on the mono stereo switch to the desired setting.
The input amplifier can optionally be fitted with the test generator.
By setting the jumpers JS1 and JS2 on the mono/stereo input amplifier it is possible to define the channel that is to supply the mono signal to be recorded.
It is also possible to mix both input signals and to record them in mono mode.

M/S INPUT AMPLIFIER
1.727.451.00 GRP44

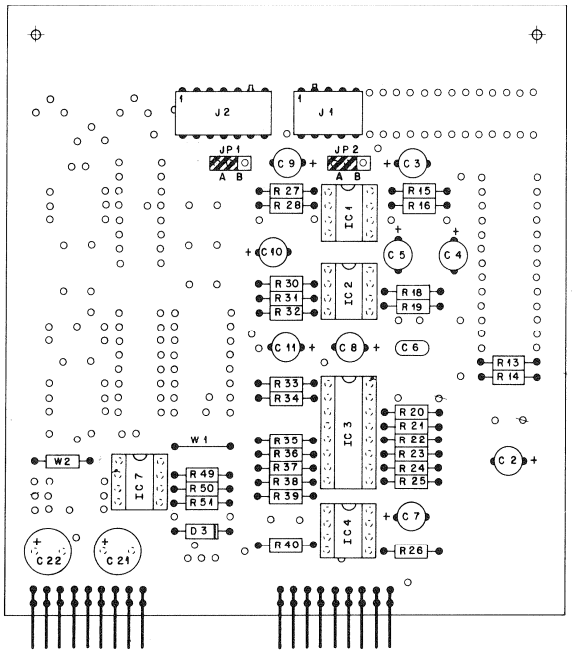

M/S INPUT AMPLIFIER with test generator
1.727..441.00 GRP44

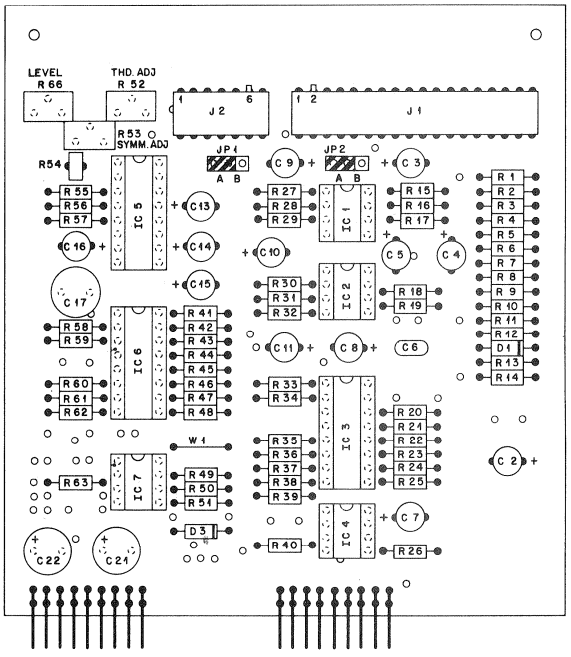

Fig. 4.10.1

Jumper in position JP1	JP2	Input level
A	A	The input signal of CH 1+2 are mixed. The resulting mono signal is recorded on CH 1+2.
A	B	The input signal of CH 1 is recorded on CH 1+2.
B	A	The input signal of CH 2 is recorded on CH 1+2.
B	B	Both input signals are short-circuit to ground. No mono recording can be made.

By setting the jumpers JS1 and JS2 on the mono/stereo output amplifier it is possible to define the channel on which the aggregate signal (mono signal) of the tape recording is available. It is also possible to make the signal available on both channels.

M/S OUTPUT AMPLIFIER with test generator
1.727.442.00 GRP45

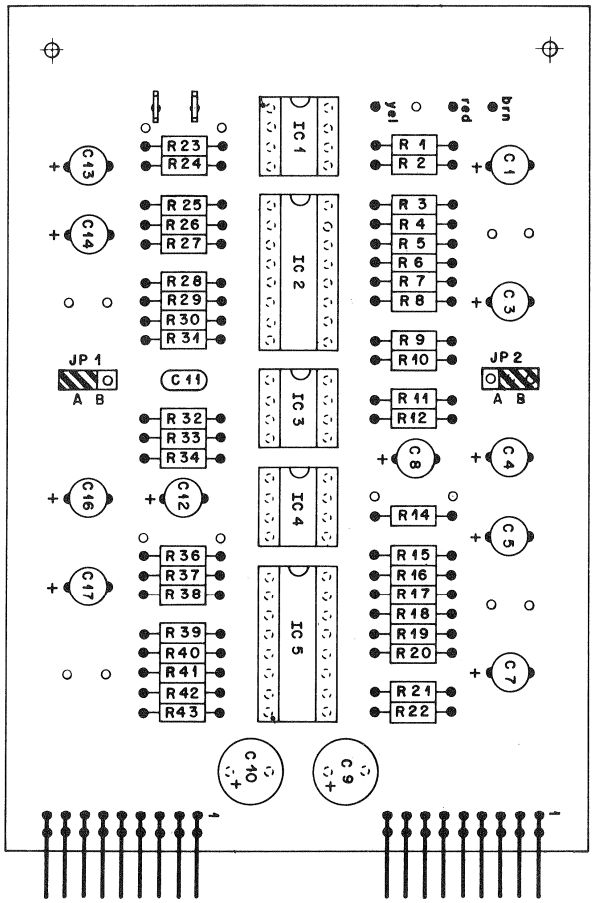

M/S OUTPUT AMPLIFIER PBO
1.727.452.00 GRP45

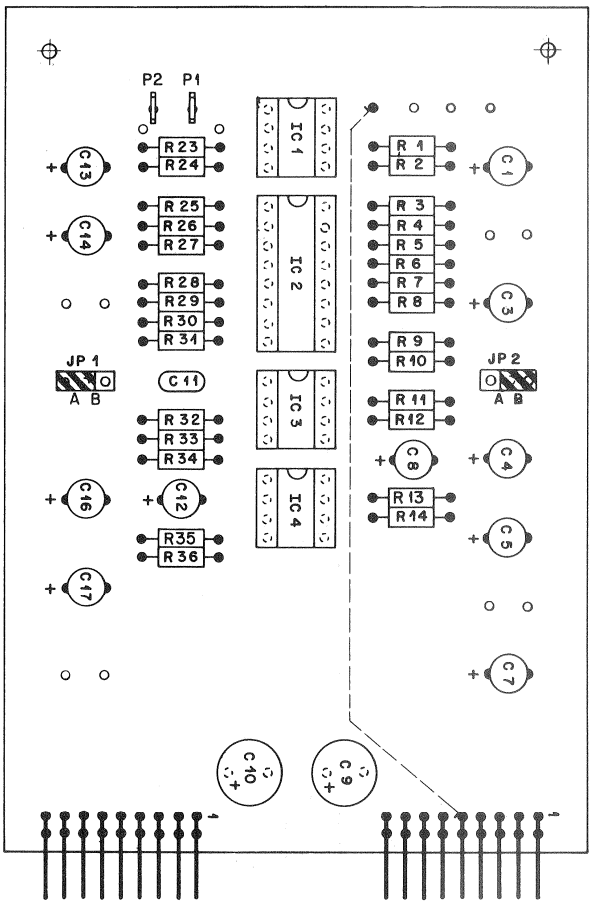

Fig. 4.10.2

Jumper in position JP1	JP2	Input level
A	A	The aggregate signal of the reproduce CH 1 + 2 are available on the XLR outputs CH 1 + 2.
A	B	The aggregate signal of the reproduce CH 1 + 2 is only available on the XLR output CH 1.
B	A	The aggregate signal of the reproduce CH 1 + 2 is only available on the XLR output CH 2.
B	B	Both reproduce channels are short-circuit to ground, i.e. the XLR outputs are muted.

4.10.2 Mono reproduce level adjustment

Prepare the recorder as follows:

- Select mono mode by simultaneously pressing the MONO [55] and the SHIFT [23] keys.

If existing:

- Deselect all UNCAL keys [42/49] -> cal. level
- Press REPRO [39].
- Deselect the READY [36/56] keys.
- Select the desired equalization (NAB/CCIR) or the desired tape type (TAPE A / TAPE B) or the desired reproduce head (HEAD A / HEAD B).

Note:

Change over is only possible by simultaneously pressing the SHIFT [18] key and the corresponding key [53/54] for TC-units [60].

- Select the prefered studio speed.
- Mount the corresponding calibration tape.
- Unfasten the small cover plate on the right-hand side of the mono key by unfastening two hexagon-socket-head screws (2.5 mm).
- Connect the audio millivoltmeter to the output that supplies the mono signal.

Adjustments:

- Play the level tone section of the reproduce calibration tape and adjust the desired mono repropduce level by means of the R2 REPRO LEVEL potentiometer (below the small right-hand cover above the headphones socket). See Fig. 4.10.3 next page
  For different mono flux setting use tape flux difference table 4.2.2.

- M/S ADJUSMENT with test generator 1.727.443.00 GR46
- M/S ADJUSMENT 1.727.453.00 GR46
- M/S ADJUSTMENT PBO 1.727.454.00 GRP46

See Fig.4.10.3 next page.

M/S adjustment with testgenerator: **1.727.443.00 GRP46**

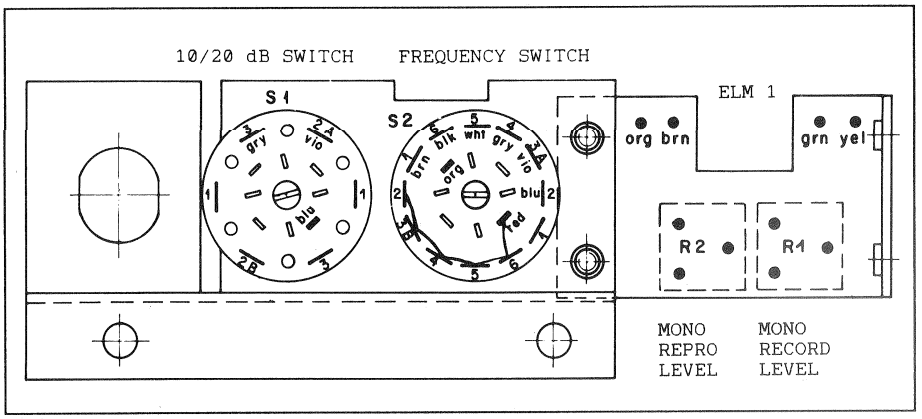

M/S adjustment: **1.727.453.00 GRP46**

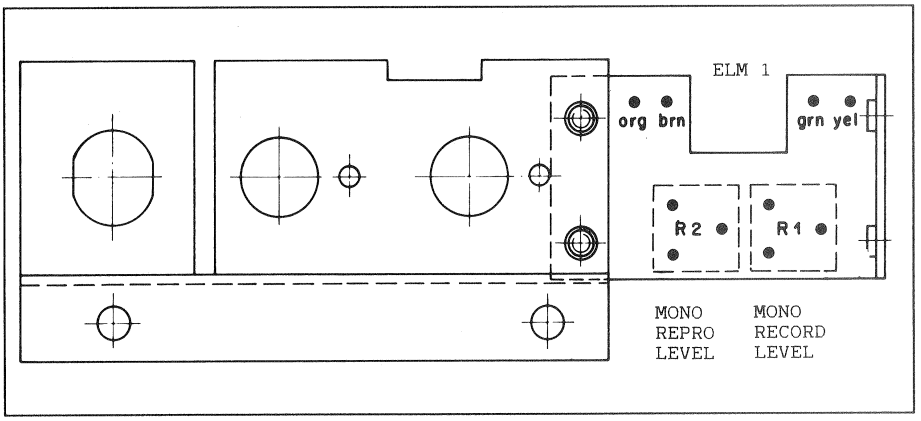

M/S adjustment PBO: **1.727.454.00 GRP46**

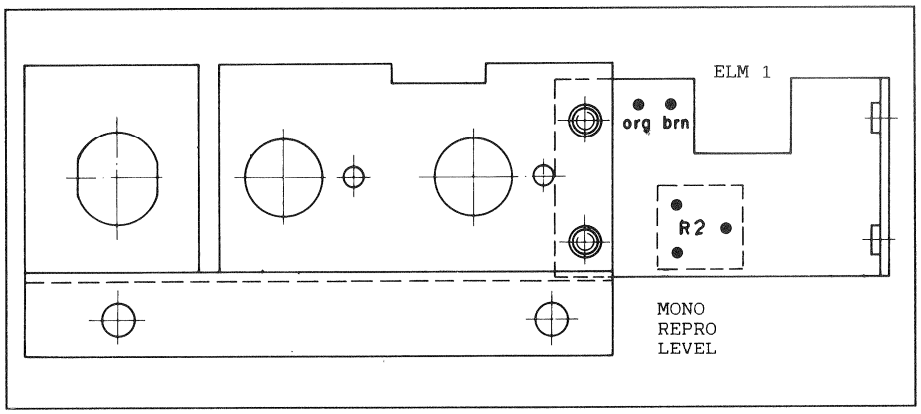

Fig. 4.10.3

Note: For heads with 0.75 mm guard track, the MONO level can be adjusted to 1.1 dB below the standard mono level in order to compensate the guard track loss.

Example:

- Calibration tape 320 nWb/m
- Desired mono tape flux 320 nWb/m = 6VU = 6dBu line level.

Mono level adjustment without compensation of the guard track loss:

- Adjust R2 to line level, +6 dBu on the line output.

Mono level adjustments with compensation of the guard track loss:

- Adjust R2 to the line level less the guard track loss value: i.e. to 6 dBu -1.1 dB = 4.9 dBu on the line output.

4.10.3 Mono record level adjustment

- Connect the audio generator (1 kHz and line level according to the jumper configuration as shown in Fig. 4.10.1) to the corresponding line input.

If both channels are mixed to produce the mono signal, feed line level to both inputs.

- Mount a new or practically new tape.
- Press the READY keys [36] (the red LEDs flash).
- If the machine is equipped with the corresponding options, make sure that the HEAD A is selected.
- The following key selections are identical to the sequence described 4.10.2

Adjustment procedure:

- Adjust RECORD LEVEL trimmer R1 below the monitor panel to line level.

4.11 Bias adjustment parameters

"Delta U" values

	9,5 cm/s 3,75 ips	19 cm/s 7,5 ips	38 cm/s 15 ips	76 cm/s 30 ips
Tape type	Δ U(dB)			
AMPEX 406	6,0	5,0	3,0	1,5
AMPEX 478	8,0	7,0	3,0	1,0
AMPEX 456 MASTER	5,0	6,5	3,5	1,5
AMPEX 499	6,0	6,5	3,5	1,5
SCOTCH (3M) 206	5,5	5,5	3,0	1,5
SCOTCH (3M) 226	6,0	6,0	3,5	1,5
SCOTCH (3M) 256	6,0	6,5	3,5	1,0
SCOTCH (3M) 996	6,0	6,0	3,5	1,5
BASF LGR 30P	6,0	6,0	4,0	1,5
BASF LGR 50P	6,0	6,0	4,0	1,5
BASF PEM 468	6,0	6,0	3,5	1,5
BASF PEM 469	7,0	7,0	5,0	2,0
BASF PER 525	6,0	5,0	3,0	1,0
BASF PER 528	6,0	6,0	3,5	1,5
BASF SPR 50LH/LHL	6,0	5,5	3,5	1,5
BASF LGR 51	6,0	6,0	4,0	2,5
BASF MAXIMA 900	6,0	6,5	4,0	2,5
BASF 911	6,0	6,5	4,0	3,0
PYRAL CJ90	6,0	6,5	3,5	1,5

5 Wiring lists, signal names

5.1 Explanations to the wiring 5/1
5.1.1 Groups 5/1
5.1.2 Elements, points 5/1
5.1.3 Principal connection types 5/4
5.1.4 Cable designations, color scheme 5/4
5.1.5 Explanations to the LOCATION PIN LIST 5/5
5.1.6 Explanations to the SIGNAL WIRE LIST 5/6
5.1.7 Explanations of the signal name abbreviations and their specification 5/9

5.2 Wiring lists 2CH-Versions 5/17
Group summary 2CH 5/17
Location pin list 5/21
Signal wire list 5/37

5.3 Wiring lists 4CH-Versions 5/60
Group summary 4CH 5/60
Location pin list 5/62
Signal wire list 5/77

5.1 Explanations to the wiring lists

For equipment with complex electronics, wiring diagrams are difficult to follow and can cause misinterpretations. For this reason we have chosen a more reliable method based on automatically generated computer wiring lists. These provide comprehensive information on all electrical connections within the equipment.

For the sake of clarity, the power supply, the the tape transport control system, and the audio section have been subdivided into groups (GRP) which in turn comprise elements (ELM) and connecting points (PNT).

The signals carry designations that have been constructed from various abbreviations and which identify their function.

5.1.1 Groups

The electrical part of he A807 tape recorder has been subdivided into groups (GRP01...GRP92). These Groups are interconnected by cables and connectors that are identified with the corresponding group number. The group summary (foldout page at the beginning of this Section) illustrates the group allocation and the physical location within the unit.

5.1.2 Elements, points

Groups that comprise several plug-in circuit boards or other elements, are subdivided into elements (ELM). The elements accommodate the connecting points (PNT).

5.1.3 Principal connector types

Type	Designation	STUDER No.
	Connector D-type , crimp:	
A	Contact pin,, for thin stranded wires	54.02.0451
AA	Contact pin,, for thick stranded wires	54.02.0455
B	Contact pin,, for thin stranded wires	54.02.0450
BB	Contact sleeve, for thick stranded wires	54.02.0454
	CIS connector:	
C	Contact sleeve	54.01.0402
D	Contact pin	54.01.0401
	MOLEX connector:	
F	Contact sleeve, for thin stranded wires	54.02.0412
	Contact sleeve for Soldering	54.02.0407
FF	Contact sleeve, for thick stranded wires	54.02.0413
G	Soldering pin	29.21.6002
H	Stranded/solid wire, tin coated (6mm)	--.--.-----
I	Connector;D-type, crimp, contact pin	54.02.1112
	Blad terminal AMP FASTON, crimp 0.8 x 6.3mm:	
JM	Contact sleeve, for thin stranded wires	54.02.0337
J	Contact sleeve, for thick stranded wires	54.02.0332
JJ	Contact sleeve, for very thick stranded wires	54.02.0338
K	Stranded/solid wire, skinned, 8mm, tin coated (1mm)	--.--.-----
L	Stranded/solid wire, tin coated (4mm)	--.--.-----
M	MOLEX contact pin, for thin stranded wires	54.02.0411
	or MOLEX contact pin for soldering	54.02.0406
MM	MOLEX contact pin, for thick stranded wires	54.02.0410
MY	AMP blade terminal (blade)	54.02.0344
N	CIS connector, contact pin	54.01.0225
O	Cotact spring for EBU card edge connector	54.01.0376
	Card edge connector:	
P	Contact spring for thin stranded wires	54.06.4512
PP	Contact spring for thick stranded wires	54.06.4510
Q	Female multipoint connector, contact sleeve	54.01.0451
R	Connector, D type, crimp, contact sleeve	54.02.1111
S	Stranded/solid wire, skinned, (4mm)and tin coated	--.--.----
T	TERMI POINT plug contact on WIRE WRAP pin	--.--.----
U	Datend solder contact, crimp	54.03.0201
UU	Datend solder, contact crimp	54.34.6002
V	Connector sleeve for thick stranded wires	54.02.0432
VV	Connector sleeve for thin stranded wires	54.02.0474
W	Wrapped	--.--.----
	Blade connector AMP FASTON, crimp 0.5 x 2.8 mm:	
X	Connector sleeve for thin stranded wires	54.02.0325
XX	Connector sleeve for thick stranded wires	54.02.0329
	Blade connector AMP FASTON, crimp 0.8 x 2.8 mm:	
Y	Connector sleeve for thin stranded wires	54.02.0326
YY	Connector sleeve for thick stranded wires	54.02.0327
Z	Not tin coated	.--.--.----

Fig. 5.1

5.1.4 Cable designations, color scheme

The most important connecting lines of the cabling are labelled. The wire ends carry three numbers which identify the group, the element, and the corresponding connecting point.

The flat-cable connectors have labels that specify the:

- Group and element numbers where the connector is plugged in, and either the name of the module into which the opposite end of the cable is plugged in, or the name of the module into which the connector itself is plugged in.

Examples:

- TAPE DECK ELECTRONICS, GRP10, CIS connector ELM03.

The conductors at this connector are black (0), green (5), red (2), and brown (1). The wires are labelled in this sequence as 10-3-1, 10-3-2, 10-3-3, and 10-3-5, i.e. the black wire is connected to contact 1 of element 03 of group 10, the green wire to contact 2, the red wire to contact 3, and the brown wire to contact 5 (contact 4 is the coding).
The opposite end, e.g. of the green conductor, is labelled as 24-1-5 which means that the wire is connected in group 24
(TAPE MOVE SENSOR) at element 1 to contact 5.

- The labelling of the same CIS connector on the TAPE DECK ELECTRONICS, GRP20, ELM03 (connection to the TAPE MOVE SENSOR) is as follows:

GR 10 / EL 03

The connector at the opposite end carries the designation:

GR 24 / EL 01

Wire colors

0	Black	(blk)
1	brown	(brn)
2	red	(red)
3	orange	(org)
4	yellow	(yel)
5	green	(grn)
6	blue	(blu)
7	violet	(vio)
8	grey	(gry)
9	white	(wht)
-	uncolored	(unc)

5.1.5 Explanations to the LOCATION PIN LIST

The LOCATION PIN LIST provides information on all connecting points and their signal names as well as the type of connection and if possible also the color of the connecting wire. This list is arranged by groups and contains all connecting points of a group, sorted by element number. However, it does not provide any information on the connections of an individual point. To trace the cable connection of a known signal name (on a certain group and the corresponding element), the SIGNAL WIRE LIST must be used.

If only the signal name is known, the SIGNAL WIRE LIST (Section 5.1.6) must again be used.

Example: (see LOCATION PIN LIST, page 14)

```
*****************************************************************************************************************
*   STUDER REVOX AG   *   L O C A T I O N   P I N   L I S T          *  91/07/18  *  16:53  *   P A G E  14   *
*****************************************************************************************************************
*            1.807.010.00  * STUDER  A 807 TAPE RECORDER 2 CH *                  *  91/07/10 - 00                 *
*****************************************************************************************************************

GRP 10        1.727.650.20
             <--  <--  <--  CONTINUATION
=======================================

ELM  4
    CONN. SERIAL CTL.                J04
-----------------------------------------
PNT SIGNAL NAME  COLOR LV TYPE         F
-----------------------------------------
 1  RCVDATA       1        N
 2  KEY
 3  +0.0V         0        B
 4  +24V-RMT      8        B
 5  SN-DATA       2        B
-----------------------------------------
```

Group: **GRP10**, 1.727.650.20 TAPE DECK ELECTRONICS

Element 4: **ELM04** Serial remote control connectors (CIS)

Connection type: **(TYPE)** N CIS connector, contact pin (see Table D5/4)

Wiring colors: **(COLOR)** 1, 0, 8, 2

Signal name: RCVDATA, +0.0V, +24V-RMT, and SN-DATA (Key code)

Connector type: **(PNT)** 1, 2, 3, 4, 5

5.1.6 Explanations to the SIGNAL WIRE LIST

The SIGNAL WIRE LIST provides information on which connecting points are linked to each other. It is principally used for explaining the connection of a signal found in the diagram to the corresponding assembly(ies). This list is arranged alphabetically by signal name. The alphabetic section is preceded by the signal names of the zero Volt points as well as the supply voltages.

The signal name can be found in the first column (SIGNAL NAME). The second column specifies the wire COLOR. The fourth column specifies the groups (GRP), elements (ELM), and connecting points at which the signal appears. This column is arranged by assembly number and !ub does not provide any information on the signal path !ue through the equipment.

Example: (see SIGNAL WIRE LIST, page 42)

```
*****************************************************************************************************************************
*   STUDER REVOX AG   *    S I G N A L    W I R E    L I S T                  *  91/07/18  *  16:53  *   P A G E  42   *
*****************************************************************************************************************************
*            1.807.010.00  * STUDER  A 807 TAPE RECORDER 2 CH *                  *  91/07/10 - 00                          *
*****************************************************************************************************************************
```

SIGNAL NAME	COLOR	MI	ASY GRP	ELM	PNT	S	LV	TYPE	DESCRIPTION OF ELEMENT		REMARK	ELEMENT NR.
-15.0V	6		1	8	16			B	CONN. EXT. VU PANEL, CTL			
	6		10	2	11			N	CONN. CAPSTAN CTL.	J02		
	6		10	6	19			N	CONN. SPOOLING MOTOR CTL.	J06		
	6		10	8	11			N	CONN. EXT. VU-PANEL	J08		
	6		10	9	15			N	CONN. COMMAND PANEL	J09		
	6		10	10	15			N	CONN. AUDIO CTL.	J10		
	6		11	2	3			N	CONN. TAPE TENS. SENSOR	J02		
	6		11	3	10			N	CONN. TAPE DECK CTL.	J03		
	6		13	1	4			N	CONN. SP. MOTOR CTL, J02			
	6		20	1	10			N	CONN. TAPE DECK CTL.	J01		
	6		30	3	20			D	CONN. TAPE DECK CTL. J10			
	6		40	1	11			N	CONN. TAPE DECK ELECTRONICS			
			40	12	19			N	CONN. AUDIO CONTROL J12			
			40	23	2			N	CONN. AUDIO ELECTRONICS CH1			
			40	31	8			N	CONN. INSERT, INPUT CIRCUIT			
			40	32	1			N	CONN. INSERT, INPUT CIRCUIT			
			40	33	1			N	CONN. PREAMPLIFIER, SECOND REPRO			
			40	36	6			N	CONN. INSERT, OUTPUT CIRCUIT			
			40	43	2			N	CONN. AUDIO ELECTRONICS CH2			
			41	13	2			N	CONN. AUDIO CTL, J23			
			42	13	2			N	CONN. AUDIO CTL, J43			
			43	33	1			N	CONN. AUDIO CTL, J33			
			44	32	1			N	CONN. AUDIO CTL, J32			
			45	36	6			N	CONN. AUDIO CTL, J36			
			47	1	19			N	CONN. TO AUDIO CONTROL J12			
			47	3	2			N	CONN. NRS CONTROL J3			
			48	31	8			N	CONN. INSERT, INPUT CIRCUIT			
			48	32	1			N	CONN. INSERT, INPUT CIRCUIT			
			49	36	6			N	CONN. INSERT, OUTPUT CIRCUIT			
	6		51	9	15			N	CONN. COMMAND PANEL	J09		
	9		70	2	19			N	CONN. AUDIO CONTROL	J02		
			70	10	23				CONN. TIME CODE WRITE/READ UNIT	J10		
			70	21	23				TIME CODE WRITE/READ UNIT			
	6		92	1	10			N	CONN. VU PANEL, CTL			
-20.0V	6		6	4	15			N	CONN. TAPE DECK ELECTRONICS	J04		
	6		10	1	4			C	CONNECTOR POWER SUPPLY	J01		
A-AUXSC1			92	2	2			N	CONN. VU PANEL, AUDIO			
A-AUXSC2			92	2	8			N	CONN. VU PANEL, AUDIO			

Signal Name: -15.0 V

Color: 6 blue (blu) or none (internal connection on the PCB).

TYPE of connection:
B (Contact sleeve for thin stranded wires), or
D (Contact pin), or
N (CIS connector, contact pin)

34 of the above connecting points carry the -15.0 V signal. However, this does not mean that the signal is actually wired in the listed sequence from point to point.

5.1.7 Explanation of the signal name abbreviations and their specifications

Signal	Description	Specification
0 - AUDIO	GROUND from AUDIO BOARD	0,0 V
0 - MOTFL	GROUND to Motor filter	0,0 V
0 -MOVES	GROUND to tape move sensor	0,0 V
0 -MSPLY	GROUND to motor supply	0,0 V
0 - TACH1	GROUND to spooling. motor tacho left	0,0 V
0 - TACH2	GROUND to spooling. motor tacho right	0,0 V
0 - TTA	GROUND to tape tension adjustment	0,0 V
0 - TTS	GROUND to tape tension sensor	0,0 V
17VAC	Ctl. voltage f. POWER ON/OFF Switch	
+0,0 V	Zero referency	0,0 V
+0,0 VA	Zero referency for audio circuits	0,0 V
+0,0 VD	Zero referency for digital circuits	0,0 V
+1,2 V	Supply voltage	
+15,0 V	Supply voltage	
+20,0 V	DC supply voltage for +15 V	
+24,0 V	Supply voltage	
+24 V-RMT	DC supply voltage for remote control.	
+48,0V	Supply voltage for microphons	
+5,0 V	Supply voltage	
+5,0 VA	Supply voltage for analog circuits	
+5,0 VMF	Supply voltage for motor filter control.	
+5,0 VD	Supply voltage for digital circuits	
+5,6 V	Supply voltage	
+50,0 V	Supply voltage for motors	
+60,0 V	DC supply voltage for +48 V	
-15,0 V	Supply voltage	
-20,0 V	DC supply voltage for -15 V	
A - AUXSCx	Audio, auxiliary input screen	
A - AUXx	Audio, auxiliary input	
A - CTALKx	Audio, crosstalk compensation	
A - DRVA-x	Audio, repro insert input A	
A - DRVB-x	Audio, repro insert input B	
A - DRVIN	Audio, driver input	0,775V @ 0 VU
A - DRVS-x	Audio, repro insert input screen	
A - DO	Audio Control data for DAC's	H - activ
A.- D1-D7	Audio Control data for DAC's	H - activ
A - HFINx	Audio, HF signal input	2,0 V/153,60 kHz
A - LINAx	Audio, line input A	
A - LINBx	Audio, line input B	
A - LINSx	Audio, line input ground	
A - LOUTAx	Audio, line output A	
A - LOUTBx	Audio, line output B	
A - LOUTSx	Audio, line output ground	
A - LSA	Audio loudspeaker amplifier output A	
A - LSAMPx	Audio, loudspeaker amplifier input	
A - LSB	Audio loudspeaker amplifier output B	
A - LVINAx	Audio, to input level control potentiometer.	0,775 V @ 0 VU
A - LVINBx	Audio, from input level ctrl. buffer	0,775 V

Signal	Description	Specification
A - LVINCx	Audio, ground for input level potentiometer	
A - LVINDx	Audio, from input level ctrl. potentiometer	
A - LVMIAx	Audio, to Mic. level control potentiometer	13,6 mV @ 0 VU
A - LVIBx	Audio, from Mic. level control potentiometer	
A - LVMICx	Audio, ground for Mic. level potentiometer	
A - LVMOAx	Audio to monitor level ctrl. potentiometer	
A - LVMOBx	Audio from monitor level ctrl. potentiometer	
A - LVMOCx	Audio ground monitor lvl ctrl. potentiometer	
A - LVMONx	Audio, to monitor level ctrl. potentiometer	0,775 V @ 0 VU
A - LVOUAx	Audio, to putput level control potentiometer	0,775 V @ 0 VU
A - LVOUBx	Audio, from output level ctrl. buffer	0,775 V
A - LVOUCx	Audio, ground for output level potentiometer	
A - LVOUDx	Audio, from output level ctrl. potentiometer	
A - MIASCx	Audio, Asymmetrically Mic. input ground	
A - MICSAx	Audio, Symmetrically Mic. input A	
A - MICSBx	Audio, Symmetrically Mic. input B	
A - MICSSx	Audio, Symmetrically Mic. input ground	
A - MICSWx	Audio, MIC input switch	
A - MONITx	Audio, monitor signal	0,775 V @ 0 VU
A - MONSCx	Audio, Monitor signal screen	
A - PHINx	Audio, phones amplifier input	0,775 V @ 0 VU
A - PHISCx	Audio, phones input screen	
A - PHOUTx	Audio, phones amplifier output	
A - PHSWx	Audio, phones mode switch	
A - PHTMx	Audio, phantom powering switch	
A - PREA-x	Audio, Record insert output A	
A - PREB-x	Audio, record insert output B	
A - PREOUx	Audio, preamplifier output	0,775 V @ 0 VU
A - PRES-x	Audio, record insert screen	
A - PROSCx	Audio, preampl. screen	
A - RECA-x	Audio, record insert input A	
A - RECB-x	Audio, record insert input B	
A - RECINx	Audio, record amplifier input	0,775 V @ 0 VU
A - RECS-x	Audio, record insert screen	
A - SECRPx	Audio, second repro signal	0,775 V @ 0 VU
A - TAPA-x	Audio, repro insert output A	
A - TAPB-x	Audio, repro insert output B	
A - TAPOUx	Audio, tape amplifier output	0,775 V @ 0 VU
A - TAPS-x	Audio, repro insert screen	
A - VUMTRx	Audio, VU meter amplifier	0,775 V @ 0 VU
ACA - 17N	AC voltage for -20 V	
ACA - 17P	AC voltage for +20 V	
ACA - 20	AC voltage for +24 V	
ACA - 36	AC voltage for +48 V	
ACA - 40	Ac voltage for +50 V	
ACB - 17N	AC voltage for -20 V	
ACB - 17P	AC voltage for +24 V	
ACB - 20	AC voltage for +24 V	
ACB - 36	AC voltage for +48 V	
ACB - 40	AC voltage for +50 V	

Signal	Description	Specification
ACC - 17N	Trafo bridge	
ACC - 17P	Trafo bridge	
ACC - 20	Trafo bridge	
ACC - 36	Trafo bridge	
ACC - 40	Trafo bridge	
AN - TTENS	Analog signal, tape tension	4,0 V without tape
ARC- CLK	Audio remote crl. clock	
ARC- DATA	Audio remote crl. data	
ARC- DPEN	Audio remote crl. enable display	
ARC- D0	Audio remote crl. control data	
ARC- D1-D7	Audio remote crl. control data	
ARC- LDEN	Audio remote crl. eneble LED	
ARC- MXEN	Audio remote crl. eneble matrix	
AS - CLK	Audio serial control, data clock	
AS - DATA	Audio serial control, serial data	
AS - FAD	Loudspeaker amplifier control	L @ FADER activ
AS - HFCLK	Audio, CLK for HF driver	307,20 kHz
AS - RESET	Audio control reset	
AS - STR	Audio serial control, strobe (latch EN)	H @ on
AS - STRAB	Audio ser. ctrl., strobe and A/B ctrl. DAC's	H @ on
AS - STREC	Audio ser. ctrl., strobe record	H @ on
AS - WREN	Audio serial control, write enable	H @ on
B - DBY-x	NRS, Dolby control	L @ on
B - FAST	LED, FAST SPEED	L @ on
B - MID	LED, MIDDLE SPEED	L @ on
B - SLOW	LED, SLOW SPEED	L @ on
B - TLC-x	NRS, Telcom control	H @ on
BR - FADRY	Remote control, LED	L @ on
BR - FORW	Remote control, LED	L @ on
BR - LOCST	Remote control, LED	L @ on
BR - PLAY	Remote control, LED	L @ on
BR - REC	Remote control, LED	L @ on
BR - REW	Remote control, LED	L @ on
BR - STOP	Remote control, LED	L @ on
BR - VRSPD	Remote control, LED	L @ on
C - BASS	Control, bass switch @ FAST	+15V=ON, -15V=off
C - BIASx	Control, bias on	H @ on command
C - CALINx	Control, calibrated input	H @ on
C - CALOUx	Control, calibrated output	H @ on
C - CUEAT	Control, signal attenuation	H @ on
C - EQA	Control, equalisation, A	H @ on
C - EQB	Control, equalisation, B	H @ on
C - EQF	Control, equalisation, FAST	H @ on
C - EQM	Control, equalisation, middle	H @ on
C - EQN	Control, equalisation, norm	H @ on
C - EQS	Control, equalisation, slow	H @ on
C - ERASEx	Control, erase on	H @ on
C - INITTC	Time code initial signal	
C - INPUTx	Control, input signal at output	H @ on

Signal	Description	Specification
C - INSERT	Control, insert electronic	H @ on
C - MICATx	Control, Microphon attenuator	H @ on
C - MICONx	Control, Mirophon input	H @ on
C - MONOA	Control, mono/stereo switch	H @ on
C - MONOB	Not used	
C - MOTFLT	Control, spooling motor filter	L @ PLAY
C - NAB	Control, level switch @ NAB	+15V=ON, -15V=off
C - OUTSWT	Control, output line	H @ on
C - REC	Control, record TC	H @ on
C - RECx	Control, record relais	H @ on
C - REPROx	Control, reproduce	H @ on
C - SECHD	Control, second head	H @ on
C - SECRPx	Control, second reproduce	H @ on
C - SYNCx	Control, sel sync	H @ on
C - UNCINx	Control, uncalibrated input	H @ on
C - UNCOUx	Control, uncalibrated output	H @ on
CA - ADR-R	TC read/write unit ctrl.	
CA - ADR-S	TC read/write unit ctrl.	
CA - ADR-T	TC read/write unit ctrl.	
CA - ADR-U	TC read/write unit ctrl.	
CA - CHSTC	TC read/write unit ctrl.	
CA - DATAx	TC read/write unit ctrl.	
CA - SAFE	TC read/write unit ctrl.	
CAP - GRD	Not used	
CHC1 - N	Charge capacitor	0,0 V
CHC1 - P	Charge capacitor	+50 V
CHC - N	Charge capacitor	0,0 V
CHC2 - P	Charge capacitor	+24 V
CHC3 - N	Charge capacitor	0,0 V
CHC3 - P	Charge capacitor	+20 V
CHC4 - N	Charge capacitor	-20 V
CHC4 - P	Charge capacitor	0,0 V
DS - CLK	Display serial control, clock	
DS - DATA	Display serial control, DATA	
DS - ENDPL	Display serial control, ENABLE DPL	
DS - ENLED	Display serial control, ENABLE LED	
DS - ENLDT	Display serial control, ENABLE LED TD	
DS - ENMTX	Display serial control, ENABLE matrix	
DSP - DTCT	Extern TC display detection	L @ on
ERAHH-x	Erase head, high	40V @ 153,6 kHz
ERAHL-x	Erase head, low	
ERASC-TC	TC erase head, screen	
EX - ENLDA	External panel, ENABLE LED-audio	
EX - ENLDT	External panel, ENABLE LED-TD	
EX - ENMTX	External panel, ENABLE LED matrix	

Signal	Description	Specification
EXT - CLK	External panel, clock	
EXT - DATA	External panel, DATA	
EXT - D4	External panel, keyboard matrix	
EXT - D5	External panel, keyboard matrix	
EXT - D6	External panel, keyboard matrix	
EXT - D7	External panel, keyboard matrix	
EXT - FAD	External panel, LS MUTE	
F - ACA40	AC voltage for +50 V	
F - ACB40	AC voltage for +50 V	
F - LINEx	Power line after fuse	
FAD1	FADER START signal 1	
FAD2	FADER START signal 2	
GND	GROUND	
HALL1A	Capstan motor HALL element	
HALL1B	Capstan motor HALL element	
HALL2A	Capstan motor HALL element	
HALL2B	Capstan motor HALL element	
HALL3A	Capstan motor HALL element	
HALL3B	Capstan motor HALL element	
IR - REFEX	NPUT, external referency for capstan	9600 Hz
K - BRAKE	agnet, brake	L @ on
K - LIFT	agnet, tape lift	L @ on
K - PRESS	agnet, tape press	L @ on
LINE1	Power line 1	
LINE2	Power line 2	
LINFA-TC	TC write input A	
LINFB-TC	TC write input B	
LOUFA-TC	TC read output A	
LOUFB-TC	TC read output B	
MRX - A	Keyboard matrix colone	L @ on
MRX - B	Keyboard matrix colone	L @ on
MRX - C	Keyboard matrix colone	L @ on
MRX - D	Keyboard matrix colone	L @ on
MRX - E	Keyboard matrix colone	L @ on
MRX - F	Keyboard matrix colone	L @ on
MRX - G	Keyboard matrix colone	L @ on
MRX - H	Keyboard matrix colone	L @ on
MS - C76K	Spooling motor control SR clock	
MS - DIREN	Spooling motor control DIR control enable	L @ on
MS - MVCLK	MOVE CLOCK	
MS - MVDIR	MOVE DIRECTION	L @ FORW
MS - ON	Spooling motor control ON switch	L @ on
MS - PRESS	PLAY mode	H @ on

Signal	Description	Specification
MS - REFA	Tape tension ref. switch A	
MS - REFB	Tape tension ref. switch B	
MS - REW	Spooling motor REWIND control	H @ REW
MS - SHUTL	Spooling motor SHUTTLE control	H @ SHUTTLE
MV - CLK	Move sensor signal	16 Hz / 7,5 IPS
M1 - R	Supply motor, pole R	
M1 - S	Supply motor, pole S	
M1 - T	Supply motor, pole T	
M1 - TACHO	Supply motor, tacho signal	
M1 - TSENS	Supply motor, tacho sensor signal	
M2 - R	Take up motor, pole R	
M2 - REFAN	Take up motor, referency voltage	5 V @ wind
M2 - S	Take up motor, pole S	
M2 - T	Take up motor, pole T	
M2 - TACHO	Take up motor, tacho signal	
M2 - TSENS	Take up motor, tacho sensor signal	
M3 - CLK	Capstan motor control, clock	
M3 - C76K	Capstan motor control., SR clock	
M3 - DATA	Capstan motor control., Data	
M3 - EN	Capstan motor control., enable	
M3 - R	Capstan motor control., pole R	
M3 - REFEX	Capstan motor control., extt. referency	9,6 Hz
M3 - S	Capstan motor control., pole S	
M3 - SYNC	Capstan motor control., synchron	H @ Sync
M3 - T	Capstan motor control., pole T	
M3 - TACHO	Capstan motor control., tacho signal	600 Hz @ 7,5 IPS
M3 - 9600	Capstan motor control., ref. frequency	9,6 kHz
OR -CMCLK	Synchronizer port, capstan tacho	600 Hz @ 7,5 IPS
OR -MVCLK	Synchronizer port, capstan tacho	16 Hz @ 7,5 IPS
OR -MVDIR	Synchronizer port, capstan tacho	H @ forw.
OR -SYENB	Synchronizer port, eneble	L @ on
PRIMW - x	Mains trafo primer winding	
R - RECLVA	M/S adjustment	
R - RECLVB	M/S adjustment	
R - REPLVA	M/S adjustment	
R - REPLVB	M/S adjustment	
R - SHUTLx	Shuttle control potmeter	
R - VRSPD	Varispeed control potmeter	
RCVDATA	Serial control, receive data	
RECHH - x	Record head, high	
RECHL - x	Record head, low	
REPHH - TC	Time code head, high	
REPHL - TC	Time code head, low	
REPHH - x	Reproduce head, high	
REPHL - x	Reproduce head, low	
REPSC - x	Reproduce head, screen	

Signal	Description	Specification
S - LINEx	Power line, switched	
S - TAPOUT	Tape out switch L @ tape out	
S - TGATT	Test generator command	
S - TGINHI	Test generator command	
S - TGOFF	Test generator command	
S - TGO	Test generator command	
S - TGIK	Test generator command	
S - TG10DB	Test generator command	
S - TG10K	Test generator command	
S - TG125	Test generator command	
S - TG16K	Test generator command	
S - TG20DB	Test generator command	
S - TG60	Test generator command	
SF - LINEx	Power line after filter	
SM - DO	Keyboard matrix, data	
SM - D1-D7	Keyboard matrix, data	
SN - DATA	Serial control, send data	
SR - FADRY	Remote control, switch	L @ on command
SR - FORW	Remote control, switch	L @ on
SR - LIFT	Remote control, switch	L @ on
SR - LOCST	Remote control, switch	L @ on
SR - MUTE	Remote control, switch	L @ on
SR - PLAY	Remote control, switch	L @ on
SR - REC	Remote control, switch	L @ on
SR - RESET	Remote control, switch	L @ on
SR - REW	Remote control, switch	L @ on
SR - STOP	Remote control, switch	L @ on
SR - VRSPD	Remote control, switch	L @ on
SR - ZLOC	Remote control, switch	L @ on
SRPHH - x	Second repro head, high	
SRPHL - x	Second repro head, low	
SRPSC - x	Second repro head, screen	
T - TCINDL	Time code write signal	
T - TCOUDL	Time code read signal	
T -TCPRES	Time code present. signal	
TA - ACTTC	Time code activ	
TACHO - 3x	Capstan tacho	
TC - INA	Time code input A	
TC - INB	Time code input B	
TC - INS	Time code input screen	
TC - OUTA	Time code output A	
TC - OUTB	Time code output B	
TC - OUTS	Time code output screen	
TD - C307K	Tape deck clock signal	

Signal	Description	Specification
TRS - A	Tape transparent sensor, Anode	
TRS - C	Tape transparent sensor, Collector	
TRS - E	Tape transparent sensor, Emitter	
TRS - K	Tape transparent sensor, Kathode	
TTA - FORW	Tape tension adjustment	
TTA - LIBR	Tape tension adjustment	
TTA - PLAY	Tape tension adjustment	
TTA - REW	Tape tension adjustment	
TTA - SHT1	Tape tension adjustment	
TTA - SHT2	Tape tension adjustment	
TTA - SHT3	Tape tension adjustment	
TX - DSPLY	Extern TC display data	
U - PHTM	Phantom supply	
WR - BIASx	Write, data for bias adjustment	L @ on
WR - RECx	Write, data for record adjustment	L @ on
WR - REPRx	Write, data for repro adjustment	L @ om

A807 MKII ¼" 2CH

SURVEY OF GROUPS (PART 1, FRONT-VIEW 2CH)

GRP, GRP/ELM DESIGNATION OF ASSEMBLIES

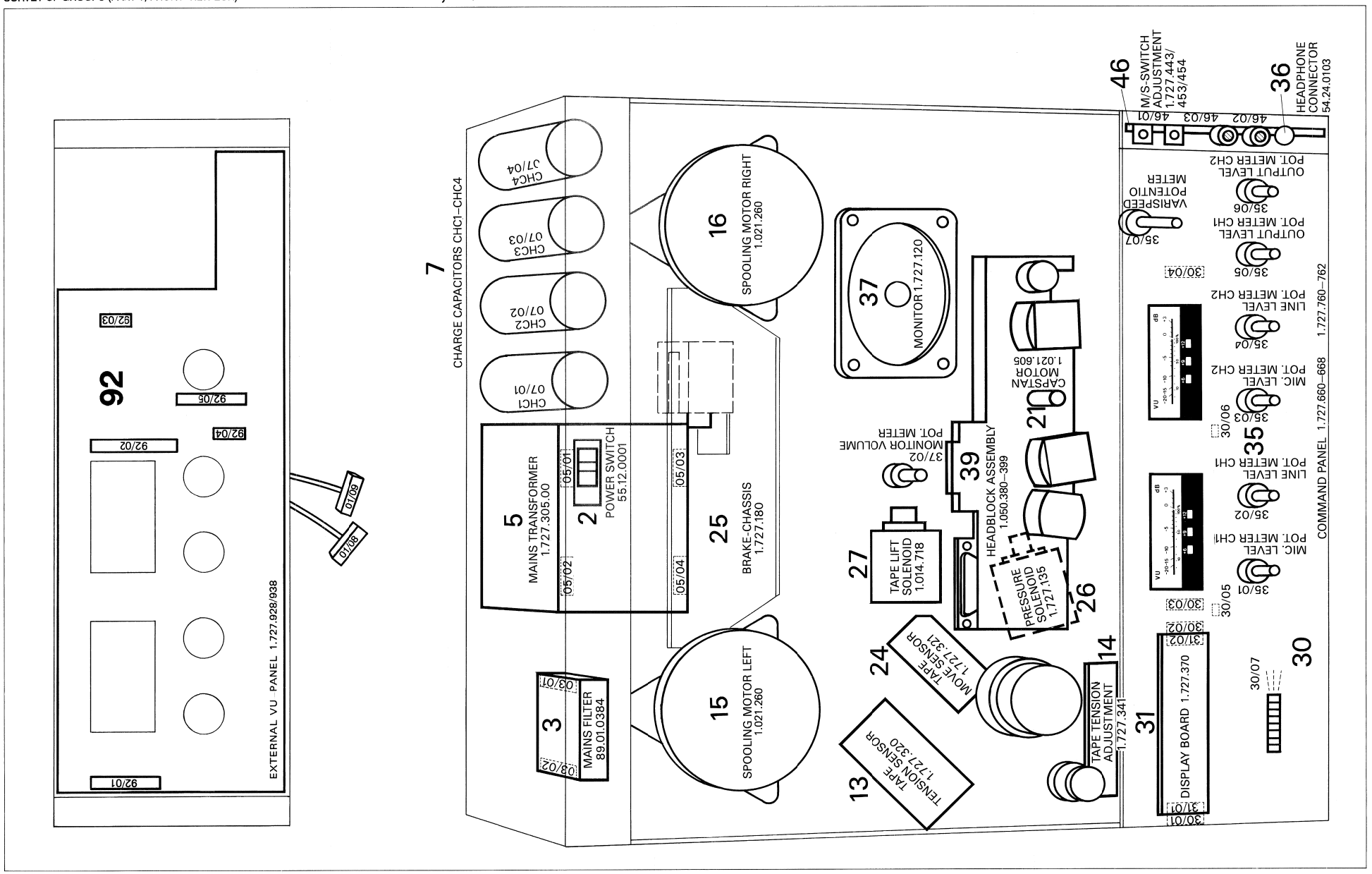

A807 MKII ¼" 2CH

SURVEY OF GROUPS (PART 2 REAR VIEW 2CH)

GRP, GRP/ELM DESIGNATION OF ASSEMBLIES

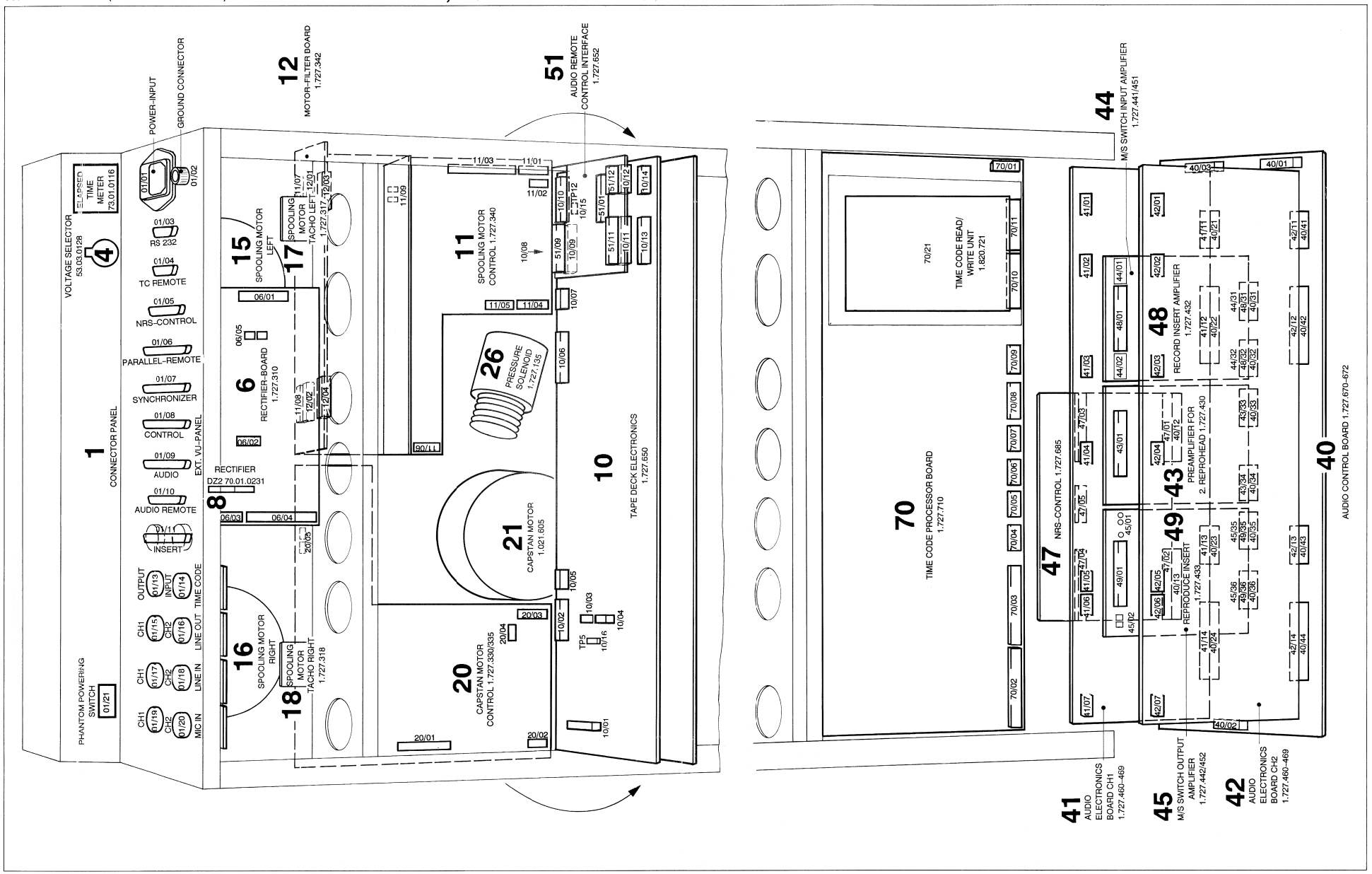

```
*****************************************************************************************************************************
*                                *                                                                                          *
*  PART NUMBER:     1.807.010.00 *  *  S T U D E R   A  8 0 7  T A P E  R E C O R D E R  2  C H  *   *    INDEX: 00      *
*                                *                                                                                          *
*****************************************************************************************************************************
```


DATE OF ORIGIN: 91/07/10
DATE OF PROC. : 91/07/18

GROUP NODE = *
INTER GROUP NODE = #
DIRECT WIRE TO # = <
WIRING NOT COMPUTED = a

S U M M A R Y

ASSEMBLYS	0		
GROUPS	42		
ELEMENTS	191		
PINS (TOTAL)	1703	(UNUSED PINS	203)
MULTIPLE PINS	0		
CODING KEYS	86		
SIGNALS	482	(UNUSED SIGNALS	71)
RECORDS READ	2025		

OPTIONS SPECIFIED : ELMSUM, LOCLIS, SIGLIS, ALLCOL, WIRALL

OPTIONS USED : ELMSUM, LOCLIS, SIGLIS, ALLCOL, WIRALL

LISTINGS GENERATED :	PAGE	ERR	WRN
GROUP SUMMARY	2	0	0
ELEMENT SUMMARY	3	0	0
LOCATION PIN LIST	8	0	0
SIGNAL WIRE LIST	37	0	0

```
*****************************************************************************************************************************
*    STUDER REVOX AG    *    G R O U P     S U M M A R Y                    * 91/07/18 * 16:53 *  P A G E  2  *
*****************************************************************************************************************************
*            1.807.010.00  * STUDER  A 807 TAPE RECORDER 2 CH *              * 91/07/10 - 00                                  *
*****************************************************************************************************************************
```

ASY	GRP	PART NUMBER	DESCRIPTION	UNUSED PINS	USED PINS	TOT.PINS	MULT.PINS	COD.KEYS	TOT.ELM	REM
	1		CONNECTOR PANEL	31	167	198	0	8	20	
	2	55.12.0001	POWER SWITCH	0	4	4	0	0	1	
	3	89.01.0384	MAINS FILTER	0	4	4	0	0	2	
	4	53.03.0128	VOLTAGE SELECTOR	0	8	8	0	0	1	
	5	1.727.305.00	MAINS TRANSFORMER	4	28	32	0	0	4	
	6	1.727.310.00	RECTIFIER BOARD	2	43	45	0	2	5	
	7		CHARGE CAPACITORS	0	8	8	0	0	4	
	8	70.01.0231	RECTIFIER DZ2	0	4	4	0	0	1	
	10	1.727.650.20	TAPE DECK ELECTRONICS	1	153	154	0	15	16	
	11	1.727.340.21	SPOOLING MOTOR CONTROL	0	58	58	0	6	9	
	12	1.727.342.00	SP. MOTOR FILTER	0	22	22	0	0	4	
	13	1.727.320.00	TAPE TENSION SENSOR	0	4	4	0	1	1	
	14	1.727.341.00	TAPE TENS. ADJUSTMENT	0	8	8	0	0	1	
	15	1.021.260.00	SPOOLING MOTOR, LEFT	0	3	3	0	0	1	
	16	1.021.260.00	SPOOLING MOTOR, RIGHT	0	3	3	0	0	1	
	17	1.727.317.00	SP. MOTOR TACHO, LEFT	0	3	3	0	0	1	
	18	1.727.318.00	SP. MOTOR TACHO, RIGHT	0	3	3	0	0	1	
	20	1.727.330.24	CAPSTAN MOTOR CONTROL	0	32	32	0	4	5	
	21	1.021.605.00	CAPSTAN MOTOR	0	14	14	0	2	2	
	24	1.727.321.00	TAPE MOVE SENSOR	0	4	4	0	1	1	
	25	1.177.180.81	BRAKE CHASSIS	0	2	2	0	0	1	
	26	1.727.135.81	PRESS SOLENOID	0	2	2	0	0	1	
	27	1.014.718.00	TAPE LIFT SOLENOID	0	2	2	0	0	1	
	30	1.727.662.00	COMMAND PANEL	1	50	51	0	2	7	
	31	1.727.370.00	DISPLAY BOARD	0	8	8	0	0	2	
	35		LEVEL CONTROL PANEL	0	21	21	0	0	7	
	36	54.24.0103	PHONES CONNECTOR	0	5	5	0	0	1	
	37	1.727.120.00	MONITOR	0	14	14	0	0	2	
	39	1.050.382.00	HEAD BLOCK ASSEMBLY	1	24	25	0	0	1	
	40	1.727.670.00	AUDIO CONTROL BOARD	43	212	255	0	3	19	
	41	1.727.460.00	AUDIO ELECTRONICS CH1	0	88	88	0	7	11	
	42	1.727.460.00	AUDIO ELECTRONICS CH2	0	88	88	0	7	11	
	43	1.727.430.00	PREAMPLIFIER F. SECOND HEAD	12	12	24	0	1	3	
	44	1.727.441.00	MONO/STEREO SWITCH, INPUT AMPL.	10	31	41	0	2	4	
	45	1.727.442.00	MONO/STEREO SWITCH, OUTPUT AMPL.	4	20	24	0	0	4	
	46	1.727.443.00	MONO/STEREO SWITCH, ADJUSTMENT	2	20	22	0	0	3	
	47	1.727.685.00	NRS-CONTROL	41	47	88	0	3	5	
	48	1.727.432.00	RECORD INSERT AMPL.	9	24	33	0	0	3	
	49	1.727.433.00	REPRODUCE INSERT AMPL.	11	22	33	0	0	3	
	51	1.727.652.00	AUDIO REMOTE CTL. IF.	1	56	57	0	4	4	
	70	1.727.710.00	TIME CODE PROCESSOR	28	120	148	0	13	12	
	92	1.727.928.00	EXT. VU PANEL	2	59	61	0	5	5	
			DISTRIBUTED IN 42 GRP TOTAL :	203	1500	1703	0	86	191	

```
*    STUDER REVOX AG    *    E L E M E N T    S U M M A R Y                    * 91/07/18 * 16:53 *   P A G E   3   *
*              1.807.010.00  * STUDER  A 807 TAPE RECORDER 2 CH *                * 91/07/10 - 00                      *
```

GRP	ELM	PART NUMBER	DESCRIPTION		UNUSED PINS	USED PINS	TOT.PINS	MULT.PINS	COD.KEYS	REMARK
1	1		CONNECTOR POWER INPUT	P01	0	5	5	0	0	
1	2		CONN. GROUND		0	1	1	0	0	
1	3		SERIAL CTL. CONNECTOR		4	4	8	0	1	
1	4		TC REMOTE DISPLAY CONNECTOR		4	4	8	0	1	
1	5		NRS CONTROL CONNECTOR		4	10	14	0	1	
1	6		PARALLEL REMOTE CONNECTOR		0	24	24	0	1	
1	7		SYNCHRONIZER CONNECTOR		1	22	23	0	2	
1	8		CONN. EXT. VU PANEL, CTL		14	11	25	0	0	
1	9		CONN. EXT. VU PANEL, AUDIO		3	21	24	0	1	
1	10		AUDIO REMOTE CONTROL CONN.		1	13	14	0	1	
1	11		AUDIO INSERT CONNECTOR		0	25	25	0	0	
1	13		CONN. LINE OUTPUT, TC		0	3	3	0	0	
1	14		CONN. LINE INPUT, TC		0	3	3	0	0	
1	15		CONN. LINE OUTPUT, CH1		0	3	3	0	0	
1	16		CONN. LINE OUTPUT, CH2		0	3	3	0	0	
1	17		CONN. LINE INPUT, CH1		0	3	3	0	0	
1	18		CONN. LINE INPUT, CH2		0	3	3	0	0	
1	19		CONN. MIC INPUT, CH1		0	3	3	0	0	
1	20		CONN. MIC INPUT, CH2		0	3	3	0	0	
1	21		PHANTOM POWERING SWITCH		0	3	3	0	0	
2	1		POWER SWITCH		0	4	4	0	0	
3	1		MAINS FILTER, INPUT		0	2	2	0	0	
3	2		MAINS FILTER, OUTPUT		0	2	2	0	0	
4	1		VOLTAGE SELECTOR		0	8	8	0	0	
5	1		PRIMARY 1	P01	0	4	4	0	0	
5	2		PRIMARY 2	P02	0	4	4	0	0	
5	3		SECONDARY 1	P03	2	10	12	0	0	
5	4		SECONDARY 2	P04	2	10	12	0	0	
6	1		CONN. TRANSFORMER	J01	0	12	12	0	1	
6	2		CONN. TO CHARGE CAPACITORS	J02	1	6	7	0	0	
6	3		CONN. FROM CHARGE CAPACITORS	J03	1	6	7	0	0	
6	4		CONN. TAPE DECK ELECTRONICS	J04	0	17	17	0	1	
6	5		CONN. RECTIFIER DZ2		0	2	2	0	0	
7	1		CHARGE CAPACITOR CHC1		0	2	2	0	0	
7	2		CHARGE CAPACITOR CHC2		0	2	2	0	0	
7	3		CHARGE CAPACITOR CHC3		0	2	2	0	0	
7	4		CHARGE CAPACITOR CHC4		0	2	2	0	0	
8	1		RECTIFIER DZ2		0	4	4	0	0	
10	1		CONNECTOR POWER SUPPLY	J01	0	9	9	0	1	
10	2		CONN. CAPSTAN CTL.	J02	0	13	13	0	2	
10	3		CONN. MOVE SENSOR	J03	0	4	4	0	1	
10	4		CONN. SERIAL CTL.	J04	0	4	4	0	1	

./.

```
*    STUDER REVOX AG    *    E L E M E N T    S U M M A R Y                    * 91/07/18 * 16:53 *   P A G E   4   *
*              1.807.010.00  * STUDER  A 807 TAPE RECORDER 2 CH *                * 91/07/10 - 00                      *
```

GRP	ELM	PART NUMBER	DESCRIPTION		UNUSED PINS	USED PINS	TOT.PINS	MULT.PINS	COD.KEYS	REMARK
10	5		CONN. TAPE TRANSPARENT SENSOR	J05	0	4	4	0	1	
10	6		CONN. SPOOLING MOTOR CTL.	J06	0	19	19	0	1	
10	7		CONN. SOLENOIDS	J07	1	3	4	0	1	
10	8		CONN. EXT. VU-PANEL	J08	0	15	15	0	1	
10	9		CONN. COMMAND PANEL	J09	0	19	19	0	1	
10	10		CONN. AUDIO CTL.	J10	0	15	15	0	1	
10	11		CONN. PARALLEL REMOTE A	J11	0	15	15	0	1	
10	12		CONN. PARALLEL REMOTE B	J12	0	9	9	0	1	
10	13		CONN. SYNCHRONIZER A	J13	0	14	14	0	1	
10	14		CONN. SYNCHRONIZER B	J14	0	8	8	0	1	
10	15		CONN. GROUND (TP 12)		0	1	1	0	0	
10	16		CONN. TESTPOINT (TP05)		0	1	1	0	0	
11	1		CONN. TAPE TENS. ADJUSTMENT	J01	0	8	8	0	1	
11	2		CONN. TAPE TENS. SENSOR	J02	0	4	4	0	1	
11	3		CONN. TAPE DECK CTL.	J03	0	19	19	0	1	
11	4		CONN. SP. MOTOR TACHO, RIGHT	J04	0	3	3	0	1	
11	5		CONN. SP. MOTOR TACHO, LEFT	J05	0	3	3	0	1	
11	6		CONN. SHUTTLE CTL.	J06	0	3	3	0	1	
11	7		CONN. SP. MOTOR FILTER, LEFT	J07	0	9	9	0	0	
11	8		CONN. SP. MOTOR FILTER, RIGHT	J08	0	7	7	0	0	
11	9		CONN. SP. MOTOR SUPPLY,	P1, P2	0	2	2	0	0	
12	1		CONN. SP. MOTOR CTL,	P01	0	9	9	0	0	
12	2		CONN. SP. MOTOR CTL,	P02	0	7	7	0	0	
12	3		CONN. SP. MOTOR LEFT	J01	0	3	3	0	0	
12	4		CONN. SP. MOTOR RIGHT	J02	0	3	3	0	0	
13	1		CONN. SP. MOTOR CTL, J02		0	4	4	0	1	
14	1		CONN. SP. MOTOR CTL, J01		0	8	8	0	0	
15	1		CONN. SP. MOTOR FILTER, J01		0	3	3	0	0	
16	1		CONN. SP. MOTOR FILTER, J01		0	3	3	0	0	
17	1		CONN. SP. MOTOR CTL, J05		0	3	3	0	0	
18	1		CONN. SP. MOTOR CTL, J04		0	3	3	0	0	
20	1		CONN. TAPE DECK CTL.	J01	0	13	13	0	1	
20	2		CONN. VARI SPEED CTL.	J02	0	3	3	0	1	
20	3		CONN. CAPSTAN TACHO	J03	0	11	11	0	1	
20	4		CONN. CAPSTAN MOTOR	J04	0	3	3	0	1	
20	5		CONN. CAPSTAN MOTOR SUPPLY	P1, P2	0	2	2	0	0	
21	1		CONN. CAPSTAN CTL, J04		0	3	3	0	1	
21	2		CONN. CAPSTAN CTL, J03		0	11	11	0	1	
24	1		CONN. TAPE DECK CTL. J03		0	4	4	0	1	

```
*    STUDER REVOX AG    *    E L E M E N T    S U M M A R Y                    * 91/07/18 * 16:53 *   P A G E   5   *
*            1.807.010.00  * STUDER  A 807 TAPE RECORDER 2 CH *                 * 91/07/10 - 00                      *
```

GRP	ELM	PART NUMBER	DESCRIPTION	UNUSED PINS	USED PINS	TOT.PINS	MULT.PINS	COD.KEYS	REMARK
25	1		CONN. TAPE DECK CTL. J07	0	2	2	0	0	
26	1		CONN. TAPE DECK CTL. J07	0	2	2	0	0	
27	1		CONN. TAPE DECK CTL. J07	0	2	2	0	0	
30	1		CONN. SPEED INDICATORS	0	3	3	0	0	
30	2		CONN. DISPLAY EL.	0	5	5	0	0	
30	3		CONN. TAPE DECK CTL. J10	0	19	19	0	1	
30	4		CONN. KEYS MATRIX	1	18	19	0	1	
30	5		CONN. VU-INPUT CH1	0	1	1	0	0	
30	6		CONN. VU-INPUT CH2	0	1	1	0	0	
30	7		SHUTTLE POTMETER	0	3	3	0	0	
31	1		CONN. COMMAND PANEL J01	0	3	3	0	0	
31	2		CONN. COMMAND PANEL J02	0	5	5	0	0	
35	1		MIC LEVEL POTM. CH1	0	3	3	0	0	
35	2		LINE LEVEL POTM. CH1	0	3	3	0	0	
35	3		MIC LEVEL POTM. CH2	0	3	3	0	0	
35	4		LINE LEVEL POTM. CH2	0	3	3	0	0	
35	5		OUTPUT LEVEL POTM. CH1	0	3	3	0	0	
35	6		OUTPUT LEVEL POTM. CH2	0	3	3	0	0	
35	7		VARIO SPEED POTM.	0	3	3	0	0	
36	1		CONN. HEAD PHONES	0	5	5	0	0	
37	1		LOUDSPEAKER	0	2	2	0	0	
37	2		MONITOR VOLUME POTM.	0	12	12	0	0	
39	1		CONN. AUDIO ELECTRONICS	1	24	25	0	0	
40	1		CONN. TAPE DECK ELECTRONICS	2	17	19	0	1	
40	2		CONN. MONITOR	1	18	19	0	1	
40	3		CONN. PHANTOM POWERING SWITCH	0	3	3	0	1	
40	12		CONN. AUDIO CONTROL J12	9	11	20	0	0	
40	13		CONN. AUDIO CONTROL J13	12	8	20	0	0	
40	21		CONN. AUDIO ELECTRONICS CH1	0	7	7	0	0	
40	22		CONN. AUDIO ELECTRONICS CH1	0	20	20	0	0	
40	23		CONN. AUDIO ELECTRONICS CH1	0	13	13	0	0	
40	24		CONN. AUDIO ELECTRONICS CH1	0	20	20	0	0	
40	31		CONN. INSERT, INPUT CIRCUIT	2	7	9	0	0	
40	32		CONN. INSERT, INPUT CIRCUIT	1	8	9	0	0	
40	33		CONN. PREAMPLIFIER, SECOND REPRO	6	3	9	0	0	
40	34		CONN. PREAMLIFIER, SECOND REPRO	6	3	9	0	0	
40	35		CONN. INSERT, OUTPUT CIRCUIT	2	7	9	0	0	
40	36		CONN. INSERT, OUTPUT CIRCUIT	2	7	9	0	0	
40	41		CONN. AUDIO ELECTRONICS CH2	0	7	7	0	0	
40	42		CONN. AUDIO ELECTRONICS CH2	0	20	20	0	0	
40	43		CONN. AUDIO ELECTRONICS CH2	0	13	13	0	0	

```
*    STUDER REVOX AG    *    E L E M E N T    S U M M A R Y                    * 91/07/18 * 16:53 *   P A G E   6   *
*            1.807.010.00  * STUDER  A 807 TAPE RECORDER 2 CH *                 * 91/07/10 - 00                      *
```

GRP	ELM	PART NUMBER	DESCRIPTION	UNUSED PINS	USED PINS	TOT.PINS	MULT.PINS	COD.KEYS	REMARK
40	44		CONN. AUDIO ELECTRONICS CH2	0	20	20	0	0	
41	1		CONN. MIC LEVEL POT, CH1	0	3	3	0	1	
41	2		CONN. MIC AND LINE INPUTS, CH1	0	9	9	0	1	
41	3		CONN. LINE LEVEL POT, CH1	0	3	3	0	1	
41	4		CONN. HEAD BLOCK, RECORD	0	4	4	0	1	
41	5		CONN. HEAD BLOCK, REPRO	0	3	3	0	1	
41	6		CONN. OUTPUT LEVEL POT, CH1	0	3	3	0	1	
41	7		CONN. LINE OUTPUT CONNECTOR, CH1	0	3	3	0	1	
41	11		CONN. AUDIO CTL, J21	0	7	7	0	0	
41	12		CONN. AUDIO CTL, J22	0	20	20	0	0	
41	13		CONN. AUDIO CTL, J23	0	13	13	0	0	
41	14		CONN. AUDIO CTL, J24	0	20	20	0	0	
42	1		CONN. MIC LEVEL POT, CH2	0	3	3	0	1	
42	2		CONN. MIC AND LINE INPUTS, CH2	0	9	9	0	1	
42	3		CONN. LINE LEVEL POT, CH2	0	3	3	0	1	
42	4		CONN. HEAD BLOCK, RECORD	0	4	4	0	1	
42	5		CONN. HEAD BLOCK, REPRO	0	3	3	0	1	
42	6		CONN. OUTPUT LEVEL POT, CH2	0	3	3	0	1	
42	7		CONN. LINE OUTPUT CONNECTOR, CH2	0	3	3	0	1	
42	11		CONN. AUDIO CTL, J41	0	7	7	0	0	
42	12		CONN. AUDIO CTL, J42	0	20	20	0	0	
42	13		CONN. AUDIO CTL, J43	0	13	13	0	0	
42	14		CONN. AUDIO CTL, J44	0	20	20	0	0	
43	1		CONN. HEAD BLOCK,SEC REPRO	0	6	6	0	1	
43	33		CONN. AUDIO CTL, J33	6	3	9	0	0	
43	34		CONN. AUDIO CTL, J34	6	3	9	0	0	
44	1		CONN. M/S ADJUSTMENT	4	13	17	0	1	
44	2		CONN. M/S OUTPUT APML.	2	4	6	0	1	
44	31		CONN. AUDIO CTL, J31	3	6	9	0	0	
44	32		CONN. AUDIO CTL, J32	1	8	9	0	0	
45	1		CONN. M/S INPUT AMPL. J01	0	4	4	0	0	
45	2		CONN. M/S ADJUSTMENT	0	2	2	0	0	
45	35		CONN. AUDIO CTL, J35	2	7	9	0	0	
45	36		CONN. AUDIO CTL, J36	2	7	9	0	0	
46	1		CONN. M/S INPUT AMPL. J01	0	4	4	0	0	
46	2		TEST GEN. LEVEL SWITCH	1	3	4	0	0	
46	3		TEST GEN. FREQUENCY SWITCH	1	13	14	0	0	
47	1		CONN. TO AUDIO CONTROL J12	9	11	20	0	0	
47	2		CONN. TO AUDIO CONTROL J13	12	8	20	0	0	
47	3		CONN. NRS CONTROL J3	8	11	19	0	1	
47	4		CONN. NRS CONTROL J4	11	8	19	0	1	
47	5		CONN. NRS CONTROL J2	1	9	10	0	1	

STUDER REVOX AG * E L E M E N T S U M M A R Y * 91/07/18 * 16:53 * P A G E 7 *
1.807.010.00 * STUDER A 807 TAPE RECORDER 2 CH * * 91/07/10 - 00 *

GRP	ELM	PART NUMBER	DESCRIPTION		UNUSED PINS	USED PINS	TOT.PINS	MULT.PINS	COD.KEYS	REMARK
48	1		CONN. RECORD INSERT		6	9	15	0	0	
48	31		CONN. INSERT, INPUT CIRCUIT		2	7	9	0	0	
48	32		CONN. INSERT, INPUT CIRCUIT		1	8	9	0	0	
49	1		CONN. REPRODUCE INSERT		7	8	15	0	0	
49	35		CONN. INSERT, OUTPUT CIRCUIT		2	7	9	0	0	
49	36		CONN. INSERT, OUTPUT CIRCUIT		2	7	9	0	0	
51	1		AUDIO REMOTE CONTROL IF.		1	13	14	0	1	
51	9		CONN. COMMAND PANEL	J09	0	19	19	0	1	
51	11		CONN. PARALLEL REMOTE A	J11	0	15	15	0	1	
51	12		CONN. PARALLEL REMOTE B	J12	0	9	9	0	1	
70	1		TO HEAD BLOCK CONNECTOR	J01	0	6	6	0	1	
70	2		CONN. AUDIO CONTROL	J02	7	11	18	0	2	
70	3		CONN. AUDIO CONTROL	J03	2	16	18	0	2	
70	4		CONN. TAPE DECK SERIAL CTL.	J04	0	4	4	0	1	
70	5		CONN. RS 232	J05	0	4	4	0	1	
70	6		CONN. REMOTE DISPLAY	J06	0	4	4	0	1	
70	7		CONN. KEYBOARD CTL.	J07	0	3	3	0	2	
70	8		CONN. RES	J08	9	0	9	0	1	
70	9		CONN. TIME CODE INPUT/OUTPUT XLR	J09	0	6	6	0	1	
70	10		CONN. TIME CODE WRITE/READ UNIT	J10	0	20	20	0	0	
70	11		CONN. TIME CODE WRITE/READ UNIT	J11	5	13	18	0	0	
70	21		TIME CODE WRITE/READ UNIT		5	33	38	0	1	
92	1		CONN. VU PANEL, CTL		1	11	12	0	1	
92	2		CONN. VU PANEL, AUDIO		1	18	19	0	1	
92	3		CONN. LEVEL CONTROL, AUDIO		0	6	6	0	1	
92	4		CONN. LEVEL CONTROL, AUDIO		0	12	12	0	1	
92	5		CONN. LEVEL CONTROL, AUDIO		0	12	12	0	1	
			DISTRIBUTED IN 191 ELM	TOTAL :	203	1500	1703	0	86	

STUDER REVOX AG * L O C A T I O N P I N L I S T * 91/07/18 * 16:53 * P A G E 8 *
1.807.010.00 * STUDER A 807 TAPE RECORDER 2 CH * * 91/07/10 - 00 *

GRP 1
CONNECTOR PANEL

ELM 1
CONNECTOR POWER INPUT P01

PNT	SIGNAL NAME	COLOR LV	TYPE	F
1	LINE1	1		
2	LINE2	6		
3	GND	5-4		
4	LINE1	1		
5	F-LINE1	1		

ELM 2
CONN. GROUND

PNT	SIGNAL NAME	COLOR LV	TYPE	F
1	GND			

ELM 3
SERIAL CTL. CONNECTOR

PNT	SIGNAL NAME	COLOR LV	TYPE	F
1				
2	SN-DATA	2	B	
3				
4				
5	+24V-RMT	8	B	
6	KEY			
7				
8	RCVDATA	1	B	
9	+0.0V	0	B	

ELM 4
TC REMOTE DISPLAY CONNECTOR

PNT	SIGNAL NAME	COLOR LV	TYPE	F
1				
2	TX-DSPLY	2	B	
3	DSP-DTCT	3	B	
4	KEY			
5	+24V-RMT	7	B	
6				
7				
8				
9	+0.0V	0	B	

./.

GRP 1
<-- <-- <-- CONTINUATION

ELM 5
NRS CONTROL CONNECTOR

PNT	SIGNAL NAME	COLOR LV	TYPE	F
1	B-DBY-01	1	B	
2	B-DBY-02	2	B	
3	B-DBY-03	3	B	
4	B-DBY-04	4	B	
5	B-TLC-01	5	B	
6	B-TLC-02	6	B	
7	B-TLC-03	7	B	
8	B-TLC-04	8	B	
9			B	
10			B	
11			B	
12	KEY		B	
13			B	
14	+24.0V	7	B	
15	+0.0VD	0	B	

ELM 6
PARALLEL REMOTE CONNECTOR

PNT	SIGNAL NAME	COLOR LV	TYPE	F
1	+0.0V	8	B	
2	BR-REW	3	B	
3	BR-FORW	2	B	
4	BR-VRSPD	6	B	
5	SR-VRSPD	4	B	
6	SR-FADRY	5	B	
7	BR-LOCST	8	B	
8	BR-FADRY	7	B	
9	BR-REC	5	B	
10	SR-RESET	5	B	
11	FAD1	1	B	
12	FAD2	2	B	
13	IR-REFEX	3	B	
14	SR-ZLOC	6	B	
15	BR-PLAY	1	B	
16	BR-STOP	4	B	
17	SR-LIFT	7	B	
18	SR-LOCST	6	B	
19	SR-REC	3	B	
20	SR-REW	1	B	
21	SR-FORW	0	B	
22	SR-PLAY	9	B	
23	SR-STOP	2	B	
24	KEY			
25	+24V-RMT	0	B	

GRP 1
<-- <-- <-- CONTINUATION

ELM 7
SYNCHRONIZER CONNECTOR

PNT	SIGNAL NAME	COLOR LV	TYPE	F
1	+0.0V	8	B	
2	BR-REW	3	B	
3	BR-FORW	2	B	
4	BR-VRSPD	6	B	
5	SR-VRSPD	4	B	
6				
7	OR-MVCLK	5	B	
8	KEY			
9	BR-REC	5	B	
10	OR-MVDIR	6	B	
11	OR-CMCLK	1	B	
12	OR-SYENB	8	B	
13	IR-REFEX	3	B	
14	+0.0V	5	B	
15	BR-PLAY	1	B	
16	BR-STOP	4	B	
17	SR-LIFT	7	B	
18	SR-MUTE	4	B	
19	SR-REC	3	B	
20	SR-REW	1	B	
21	SR-FORW	0	B	
22	SR-PLAY	9	B	
23	SR-STOP	2	B	
24	KEY			
25	+24V-RMT	9	B	

./.

STUDER REVOX AG * L O C A T I O N P I N L I S T * 91/07/18 * 16:53 * P A G E 9
1.807.010.00 * STUDER A 807 TAPE RECORDER 2 CH * 91/07/10 - 00
<-- <-- <-- CONTINUATION

GRP 1 <-- <-- <-- CONTINUATION

ELM 8
CONN. EXT. VU PANEL, CTL

PNT	SIGNAL NAME	COLOR	LV	TYPE	F
1	+0.0VD	0		B	
2	+5.6V	5		B	
3	+15.0V	2		B	
4				B	
5	EX-ENMTX	5		B	
6	EXT-D6	6		B	
7	EXT-D7	7		B	
8				B	
9				B	
10	EXT-CLK	3		B	
11	EX-ENLDA	1		B	
12	EXT-DATA	9		B	
13				B	
14	+0.0VA	0		B	
15				B	
16	-15.0V	6		B	
17				B	
18				B	
19				B	
20				B	
21				B	
22				B	
23				B	
24				B	
25				B	

./.

GRP 1 <-- <-- <-- CONTINUATION

ELM 9
CONN. EXT. VU PANEL, AUDIO

PNT	SIGNAL NAME	COLOR	LV	TYPE	F
1	A-LVOUA1	9		A	
2	A-LVOUC1	S		A	
3	A-LVINB1	6		A	
4	0-AUDIO	0		A	
5	A-MONIT1	1		A	
6	A-PHIN1	8		A	
7	A-LSA	6		A	
8	A-LVOUA2	9		A	
9	A-LVOUC2	S		A	
10	A-LVINB2	6		A	
11				A	
12	A-MONIT2	2		A	
13				A	
14	A-LVOUB1	6		A	
15	A-LVINC1	S		A	
16	A-LVINA1	9		A	
17				A	
18	A-PREOU1	5		A	
19	A-PHIN2	4		A	
20	A-LSB	7		A	
21	A-LVOUB2	6		A	
22	A-LVINC2	S		A	
23	A-LVINA2	9		A	
24	KEY			A	
25	A-PREOU2	3		A	

ELM 10
AUDIO REMOTE CONTROL CONN.

PNT	SIGNAL NAME	COLOR	LV	TYPE	F
1	+0.0VD	0		B	
2	ARC-DATA	2		B	
3	ARC-CLK	3		B	
4	ARC-MXEN	4		B	
5	ARC-LDEN	5		B	
6	ARC-DPEN	6		B	
7	KEY			B	
8	+0.0VD	0		B	
9					
10	ARC-D0	9		B	
11	ARC-D7	1		B	
12	ARC-D6	2		B	
13	ARC-D5	3		B	
14	ARC-D4	4		B	
15	+24V-RMT	7		B	

GRP 1 <-- <-- <-- CONTINUATION

ELM 11
AUDIO INSERT CONNECTOR

PNT	SIGNAL NAME	COLOR	LV	TYPE	F
1	A-PRES-1	0		A	
2	A-PREA-1	6		A	
3	A-PREB-1	0		A	
4	A-RECS-1	0		A	
5	A-RECA-1	6		A	
6	A-RECB-1	0		A	
7	A-PRES-2	0		A	
8	A-PREA-2	6		A	
9	A-PREB-2	0		A	
10	A-RECS-2	0		A	
11	A-RECA-2	6		A	
12	A-RECB-2	0		A	
13	INSRT-ON	3		A	
14	A-TAPS-1	0		A	
15	A-TAPA-1	6		A	
16	A-TAPB-1	0		A	
17	A-DRVS-1	0		A	
18	A-DRVA-1	6		A	
19	A-DRVB-1	0		A	
20	A-TAPS-2	0		A	
21	A-TAPA-2	6		A	
22	A-TAPB-2	0		A	
23	A-DRVS-2	0		A	
24	A-DRVA-2	6		A	
25	A-DRVB-2	0		A	

ELM 13
CONN. LINE OUTPUT, TC

PNT	SIGNAL NAME	COLOR	LV	TYPE	F
1	TC-OUTS	S			
2	TC-OUTA	9			
3	TC-OUTB	6			

ELM 14
CONN. LINE INPUT, TC

PNT	SIGNAL NAME	COLOR	LV	TYPE	F
1	TC-INS	S			
2	TC-INA	9			
3	TC-INB	6			

./.

STUDER REVOX AG * L O C A T I O N P I N L I S T * 91/07/18 * 16:53 * P A G E 10
1.807.010.00 * STUDER A 807 TAPE RECORDER 2 CH * 91/07/10 - 00
<-- <-- <-- CONTINUATION

GRP 1 <-- <-- <-- CONTINUATION

ELM 15
CONN. LINE OUTPUT, CH1

PNT	SIGNAL NAME	COLOR	LV	TYPE	F
1	A-LOUTS1	S			
2	A-LOUTA1	2			
3	A-LOUTB1	3			

ELM 16
CONN. LINE OUTPUT, CH2

PNT	SIGNAL NAME	COLOR	LV	TYPE	F
1	A-LOUTS2	S			
2	A-LOUTA2	2			
3	A-LOUTB2	3			

ELM 17
CONN. LINE INPUT, CH1

PNT	SIGNAL NAME	COLOR	LV	TYPE	F
1	A-LINS1	S			
2	A-LINA1	9			
3	A-LINB1	6			

ELM 18
CONN. LINE INPUT, CH2

PNT	SIGNAL NAME	COLOR	LV	TYPE	F
1	A-LINS2	S			
2	A-LINA2	9			
3	A-LINB2	6			

ELM 19
CONN. MIC INPUT, CH1

PNT	SIGNAL NAME	COLOR	LV	TYPE	F
1	A-MICSS1	S			
2	A-MICSA1	9			
3	A-MICSB1	6			

GRP 1 <-- <-- <-- CONTINUATION

ELM 20
CONN. MIC INPUT, CH2

PNT	SIGNAL NAME	COLOR	LV	TYPE	F
1	A-MICSS2	S			
2	A-MICSA2	9			
3	A-MICSB2	6			

ELM 21
PHANTOM POWERING SWITCH

PNT	SIGNAL NAME	COLOR	LV	TYPE	F
1	A-PHTM1	0		L	
2	A-PHTM2	8		L	
3	A-PHTM3	9		L	

GRP 2 55.12.0001
POWER SWITCH

ELM 1
POWER SWITCH

PNT	SIGNAL NAME	COLOR	LV	TYPE	F
1	F-LINE1	1		J	
2	LINE2	6		J	
3	S-LINE1	1		J	
4	S-LINE2	6		J	

STUDER REVOX AG * L O C A T I O N P I N L I S T * 91/07/18 * 16:53 * P A G E 11 *
1.807.010.00 * STUDER A 807 TAPE RECORDER 2 CH * * 91/07/10 - 00 *
<-- <-- <-- CONTINUATION

GRP 3 89.01.0384
MAINS FILTER

ELM 1
MAINS FILTER, INPUT

PNT	SIGNAL NAME	COLOR LV	TYPE	F
1	S-LINE1	1	J	
2	S-LINE2	6	J	

ELM 2
MAINS FILTER, OUTPUT

PNT	SIGNAL NAME	COLOR LV	TYPE	F
1	SF-LINE1	1	J	
2	SF-LINE2	6	J	

GRP 4 53.03.0128
VOLTAGE SELECTOR

ELM 1
VOLTAGE SELECTOR

PNT	SIGNAL NAME	COLOR LV	TYPE	F
1	SF-LINE2	6-8	L	
2	PRIMW-3	3	L	
3	PRIMW-7	7	L	
4A	PRIMW-4	4-4	L	
4B	PRIMW-6	6-4	L	
5	PRIMW-1	1	L	
6	PRIMW-5	5	L	
7	SF-LINE1	2-1	L	

GRP 5 1.727.305.00
MAINS TRANSFORMER

ELM 1
PRIMARY 1 P01

PNT	SIGNAL NAME	COLOR LV	TYPE	F
1	PRIMW-1	1	Y	
2	SF-LINE1	2	Y	
3	PRIMW-3	3	Y	
4	PRIMW-4	4	Y	

ELM 2
PRIMARY 2 P02

PNT	SIGNAL NAME	COLOR LV	TYPE	F
5	PRIMW-5	5	Y	
6	PRIMW-6	6	Y	
7	PRIMW-7	7	Y	
8	SF-LINE2	8	Y	

ELM 3
SECONDARY 1 P03

PNT	SIGNAL NAME	COLOR LV	TYPE	F
9				
10	ACC-40	4	L	
11	ACC-20	4	L	
12	ACC-17N	4	L	
13	ACC-17P	4	L	
14	ACC-36	4	L	
15	ACB-36	5	L	
16	ACB-17P	6	L	
17	ACB-17N	7	L	
18	ACB-20	8	L	
19	ACB-40	9	L	
20				

STUDER REVOX AG * L O C A T I O N P I N L I S T * 91/07/18 * 16:53 * P A G E 12 *
1.807.010.00 * STUDER A 807 TAPE RECORDER 2 CH * * 91/07/10 - 00 *
<-- <-- <-- CONTINUATION

GRP 5 1.727.305.00
<-- <-- <-- CONTINUATION

ELM 4
SECONDARY 2 P04

PNT	SIGNAL NAME	COLOR LV	TYPE	F
9				
10	ACA-40	0	L	
11	ACA-20	1	L	
12	ACA-17N	2	L	
13	ACA-17P	3	L	
14	ACA-36	4	L	
15	ACC-36	4	L	
16	ACC-17P	4	L	
17	ACC-17N	4	L	
18	ACC-20	4	L	
19	ACC-40	4	L	
20				

GRP 6 1.727.310.00
RECTIFIER BOARD

ELM 1
CONN. TRANSFORMER J01

PNT	SIGNAL NAME	COLOR LV	TYPE	F
1	ACA-20	1	N	
2	ACA-17P	3	N	
3	ACA-17N	2	N	
4	ACB-40	9	N	
5	ACB-40			
6	KEY			
7	ACB-17N	7	N	
8	ACB-17P	6	N	
9	ACB-20	8	N	
10	ACB-36	5	N	
11	ACA-40	0	N	
12	ACA-40			
13	ACA-36	4	N	

ELM 2
CONN. TO CHARGE CAPACITORS J02

PNT	SIGNAL NAME	COLOR LV	TYPE	F
1	CHC2-N	8	N	
2	CHC3-N	3	N	
3	CHC4-P	4	N	
4	CHC2-P	7	N	
5	CHC3-P	2	N	
6			N	
7	CHC4-N	6	N	

ELM 3
CONN. FROM CHARGE CAPACITORS J03

PNT	SIGNAL NAME	COLOR LV	TYPE	F
1	CHC4-P	4	N	
2	CHC3-N	3	N	
3			N	
4	CHC2-N	8	N	
5	CHC4-N	6	N	
6	CHC3-P	2	N	
7	CHC2-P	7	L	

GRP 6 1.727.310.00
<-- <-- <-- CONTINUATION

ELM 4
CONN. TAPE DECK ELECTRONICS J04

PNT	SIGNAL NAME	COLOR LV	TYPE	F
1	+20.0V			
2	+60.0V	5	N	
3	17VAC	3	N	
4	+24V-RMT	8	N	
5	KEY			
6	+24.0V		N	
7	+24.0V		N	
8	+24.0V	7	N	
9	+24.0V	7	N	
10	+24.0V	7	N	
11	+24.0V	7	N	
12	+24.0V	7	N	
13	+24.0V	7	N	
14	+20.0V	2	N	
15	-20.0V	6	N	
16	+0.0V	1	N	
17	+0.0V	4	N	
18	+0.0V	0	N	

ELM 5
CONN. RECTIFIER DZ2

PNT	SIGNAL NAME	COLOR LV	TYPE	F
1	F-ACB40	8	Y	
2	F-ACA40	1	Y	

STUDER REVOX AG * L O C A T I O N P I N L I S T * 91/07/18 * 16:53 * P A G E 13
1.807.010.00 * STUDER A 807 TAPE RECORDER 2 CH * * 91/07/10 - 00

<-- <-- <-- CONTINUATION

GRP 7
CHARGE CAPACITORS

ELM 1
CHARGE CAPACITOR CHC1

PNT	SIGNAL NAME	COLOR LV	TYPE	F
1	+50.0V	2	L	
2	0-MSPLY	0	L	

ELM 2
CHARGE CAPACITOR CHC2

PNT	SIGNAL NAME	COLOR LV	TYPE	F
1	CHC2-P	7	L	
2	CHC2-N	8	L	

ELM 3
CHARGE CAPACITOR CHC3

PNT	SIGNAL NAME	COLOR LV	TYPE	F
1	CHC3-P	2	L	
2	CHC3-N	3	L	

ELM 4
CHARGE CAPACITOR CHC4

PNT	SIGNAL NAME	COLOR LV	TYPE	F
1	CHC4-P	4	L	
2	CHC4-N	6	L	

GRP 8 70.01.0231
RECTIFIER DZ2

ELM 1
RECTIFIER DZ2

PNT	SIGNAL NAME	COLOR LV	TYPE	F
1	F-ACA40	1	J	
2	F-ACB40	8	J	
3	+50.0V	2	J	
4	0-MSPLY	0	J	

GRP 10 1.727.650.20
TAPE DECK ELECTRONICS

ELM 1
CONNECTOR POWER SUPPLY J01

PNT	SIGNAL NAME	COLOR LV	TYPE	F
1	17VAC	3	C	
2	KEY		C	
3	+24V-RMT	8	C	
4	-20.0V	6	C	
5	+0.0V	0	C	
6	+20.0V	2	C	
7	+0.0V	4	C	
8	+60.0V	5	C	
9	+0.0V	1	C	
10	+24.0V	7	C	

ELM 2
CONN. CAPSTAN CTL. J02

PNT	SIGNAL NAME	COLOR LV	TYPE	F
1	M3-C76K	1	N	
2	M3-9600	2	N	
3	M3-EN	3	N	
4	M3-CLK	4	N	
5	M3-DATA	5	N	
6	M3-TACHO	6	N	
7	M3-SYNC	7	N	
8	M3-REFEX	8	N	
9	KEY			
10	KEY			
11	-15.0V	6	N	
12	+15.0V	2	N	
13	+0.0VA	0	N	
14	+0.0VD	0	N	
15	+5.6V	5	N	

ELM 3
CONN. MOVE SENSOR J03

PNT	SIGNAL NAME	COLOR LV	TYPE	F
1	0-MOVES	0	N	
2	+5.0V	5	N	
3	MV-CLK2	2	N	
4	KEY			
5	MV-CLK1	1	N	

STUDER REVOX AG * L O C A T I O N P I N L I S T * 91/07/18 * 16:53 * P A G E 14
1.807.010.00 * STUDER A 807 TAPE RECORDER 2 CH * * 91/07/10 - 00

<-- <-- <-- CONTINUATION

GRP 10 1.727.650.20
<-- <-- <-- CONTINUATION

ELM 4
CONN. SERIAL CTL. J04

PNT	SIGNAL NAME	COLOR LV	TYPE	F
1	RCVDATA	1	N	
2	KEY			
3	+0.0V	0	B	
4	+24V-RMT	8	B	
5	SN-DATA	2	B	

ELM 5
CONN. TAPE TRANSPARENT SENSOR J05

PNT	SIGNAL NAME	COLOR LV	TYPE	F
1	TRS-K	2	N	
2	TRS-A	3	N	
3	KEY		N	
4	TRS-C	4	N	
5	TRS-E	5	N	

ELM 6
CONN. SPOOLING MOTOR CTL. J06

PNT	SIGNAL NAME	COLOR LV	TYPE	F
1	MS-C76K	1	N	
2	MS-PRESS	2	N	
3	MS-SHUTL	3	N	
4	MS-REW	4	N	
5	MS-DIREN	5	N	
6	MS-ON	6	N	
7	MS-REFB	7	N	
8	MS-REFA	8	N	
9	S-TAPOUT	9	N	
10	M2-REFAN	0	N	
11	M1-TACHO	1	N	
12	M2-TACHO	2	N	
13	MS-MVDIR	3	N	
14	MS-MVCLK	4	N	
15	KEY			
16	+5.6V	5	N	
17	+0.0VD	0	N	
18	+0.0VA	0	N	
19	-15.0V	6	N	
20	+15.0V	2	N	

GRP 10 1.727.650.20
<-- <-- <-- CONTINUATION

ELM 7
CONN. SOLENOIDS J07

PNT	SIGNAL NAME	COLOR LV	TYPE	F
1	K-BRAKE	1	N	
2				
3	K-LIFT	8	N	
4	KEY			
5	K-PRESS	9	N	

ELM 8
CONN. EXT. VU-PANEL J08

PNT	SIGNAL NAME	COLOR LV	TYPE	F
1	EXT-FAD		N	
2	KEY			
3	EXT-D7	7	N	
4	EXT-D6	6	N	
5	EXT-D5	5	N	
6	EXT-D4	4	N	
7	EXT-DATA	3	N	
8	EXT-CLK	1	N	
9	EX-ENLDT	9	N	
10	+15.0V	2	N	
11	-15.0V	6	N	
12	+0.0VA	0	N	
13	+5.6V	5	N	
14	+0.0VD	0	N	
15	EX-ENMTX	9	N	
16	EX-ENLDA	5	N	

./.

GRP 10 1.727.650.20
<-- <-- <-- CONTINUATION

ELM 9
CONN. COMMAND PANEL J09

PNT	SIGNAL NAME	COLOR LV	TYPE	F
1	SM-D7	1	N	
2	SM-D6	2	N	
3	SM-D5	3	N	
4	SM-D4	4	N	
5	SM-D3	5	N	
6	SM-D2	6	N	
7	SM-D1	7	N	
8	SM-D0	8	N	
9	DS-DATA	9	N	
10	DS-CLK	9	N	
11	DS-ENDPL	1	N	
12	DS-ENLDT	2	N	
13	KEY			
14	+15.0V	2	N	
15	-15.0V	6	N	
16	+0.0VA	0	N	
17	+5.6V	5	N	
18	+0.0VD	0	N	
19	DS-ENMTX	9	N	
20	DS-ENLDA	2	N	

ELM 10
CONN. AUDIO CTL. J10

PNT	SIGNAL NAME	COLOR LV	TYPE	F
1	AS-FAD	1	N	
2	KEY			
3	AS-WREN	3	N	
4	AS-STRAB	4	N	
5	AS-STR	5	N	
6	AS-CLK	6	N	
7	AS-DATA	7	N	
8	AS-HFCLK	8	N	
9	AS-RESET	9	N	
10	+5.6V	5	N	
11	+0.0VD	0	N	
12	+48.0V	7	N	
13	+0.0VA	0	N	
14	+15.0V	2	N	
15	-15.0V	6	N	
16	AS-STREC	6	N	

```
*    STUDER REVOX AG   *    L O C A T I O N     P I N     L I S T          * 91/07/18 * 16:53 *  P A G E 15  *
*              1.807.010.00  * STUDER  A 807 TAPE RECORDER 2 CH *          * 91/07/10 - 00                    *
                                                                  <--  <--  <--  CONTINUATION
```

GRP 10 1.727.650.20 <-- <-- <-- CONTINUATION

ELM 11 CONN. PARALLEL REMOTE A J11

PNT	SIGNAL NAME	COLOR LV	TYPE	F
1	FAD1	1	N	
2	FAD2	2	N	
3	IR-REFEX	3	N	
4	KEY			
5	SR-FADRY	5	N	
6	SR-LOCST	6	N	
7	SR-LIFT	7	N	
8	+0.0V	8	N	
9	SR-PLAY	9	N	
10	SR-FORW	0	N	
11	SR-REW	1	N	
12	SR-STOP	2	N	
13	SR-REC	3	N	
14	SR-VRSPD	4	N	
15	SR-RESET	5	N	
16	SR-ZLOC	6	N	

ELM 12 CONN. PARALLEL REMOTE B J12

PNT	SIGNAL NAME	COLOR LV	TYPE	F
1	BR-PLAY	1	N	
2	BR-FORW	2	N	
3	BR-REW	3	N	
4	BR-STOP	4	N	
5	BR-REC	5	N	
6	BR-VRSPD	6	N	
7	BR-FADRY	7	N	
8	BR-LOCST	8	N	
9	KEY			
10	+24V-RMT	0	N	

./.

GRP 10 1.727.650.20 <-- <-- <-- CONTINUATION

ELM 13 CONN. SYNCHRONIZER A J13

PNT	SIGNAL NAME	COLOR LV	TYPE	F
1	OR-CMCLK	1	N	
2	KEY			
3	IR-REFEX	3	N	
4	SR-MUTE	4	N	
5	OR-MVCLK	5	N	
6	OR-MVDIR	6	N	
7	SR-LIFT	7	N	
8	+0.0V	8	N	
9	SR-PLAY	9	N	
10	SR-FORW	0	N	
11	SR-REW	1	N	
12	SR-STOP	2	N	
13	SR-REC	3	N	
14	SR-VRSPD	4	N	
15	+0.0V	5	N	

ELM 14 CONN. SYNCHRONIZER B J14

PNT	SIGNAL NAME	COLOR LV	TYPE	F
1	BR-PLAY	1	N	
2	BR-FORW	2	N	
3	BR-REW	3	N	
4	BR-STOP	4	N	
5	BR-REC	5	N	
6	BR-VRSPD	6	N	
7	KEY		N	
8	OR-SYENB	8	N	
9	+24V-RMT	9	N	

ELM 15 CONN. GROUND (TP 12)

PNT	SIGNAL NAME	COLOR LV	TYPE	F
1	GND		Y	

ELM 16 CONN. TESTPOINT (TP05)

PNT	SIGNAL NAME	COLOR LV	TYPE	F
1	MV-CLK1	0	Y	

GRP 11 1.727.340.21 SPOOLING MOTOR CONTROL

ELM 1 CONN. TAPE TENS. ADJUSTMENT J01

PNT	SIGNAL NAME	COLOR LV	TYPE	F
1	0-TTA	1	N	
2	KEY		N	
3	TTA-LIBR	3	N	
4	TTA-PLAY	4	N	
5	TTA-REW	5	N	
6	TTA-FORW	6	N	
7	TTA-SHT1	7	N	
8	TTA-SHT2	8	N	
9	TTA-SHT3	9	N	

ELM 2 CONN. TAPE TENS. SENSOR J02

PNT	SIGNAL NAME	COLOR LV	TYPE	F
1	0-TTS	0	N	
2	KEY			
3	-15.0V	6	N	
4	AN-TTENS	9	N	
5	+15.0V	2	N	

./.

```
*    STUDER REVOX AG   *    L O C A T I O N     P I N     L I S T          * 91/07/18 * 16:53 *  P A G E 16  *
*              1.807.010.00  * STUDER  A 807 TAPE RECORDER 2 CH *          * 91/07/10 - 00                    *
                                                                  <--  <--  <--  CONTINUATION
```

GRP 11 1.727.340.21 <-- <-- <-- CONTINUATION

ELM 3 CONN. TAPE DECK CTL. J03

PNT	SIGNAL NAME	COLOR LV	TYPE	F
1	MS-PRESS	2	N	
2	MS-MVCLK	4	N	
3	S-TAPOUT	9	N	
4	KEY			
5	MS-MVDIR	3	N	
6	MS-C76K	1	N	
7	M2-TACHO	2	N	
8	M1-TACHO	1	N	
9	MS-REFA	8	N	
10	-15.0V	6	N	
11	MS-REFB	7	N	
12	+0.0VA	0	N	
13	MS-DIREN	5	N	
14	M2-REFAN	0	N	
15	MS-ON	6	N	
16	+15.0V	2	N	
17	MS-REW	4	N	
18	+0.0VD	0	N	
19	+5.6V	5	N	
20	MS-SHUTL	3	N	

ELM 4 CONN. SP. MOTOR TACHO, RIGHT J04

PNT	SIGNAL NAME	COLOR LV	TYPE	F
1	0-TACH2	0	N	
2	+5.0V	5	N	
3	KEY			
4	M2-TSENS	4	N	

ELM 5 CONN. SP. MOTOR TACHO, LEFT J05

PNT	SIGNAL NAME	COLOR LV	TYPE	F
1	0-TACH1	0	N	
2	KEY			
3	+5.0V	5	N	
4	M1-TSENS	4	N	

./.

GRP 11 1.727.340.21 <-- <-- <-- CONTINUATION

ELM 6 CONN. SHUTTLE CTL. J06

PNT	SIGNAL NAME	COLOR LV	TYPE	F
1	R-SHUTL1	1	N	
2	R-SHUTL2	2	N	
3	KEY			
4	R-SHUTL3	3	N	

ELM 7 CONN. SP. MOTOR FILTER, LEFT J07

PNT	SIGNAL NAME	COLOR LV	TYPE	F
1	0-MOTFL		N	
2	M1-R		N	
3	M1-R		N	
4	M1-S		N	
5	M1-S		N	
6	+5.0VMF		N	
7	C-MOTFLT		N	
8	M1-T		N	
9	M1-T		N	

ELM 8 CONN. SP. MOTOR FILTER, RIGHT J08

PNT	SIGNAL NAME	COLOR LV	TYPE	F
1	M2-R		N	
2	M2-R		N	
3	M2-S		N	
4	M2-S		N	
5	M2-T		N	
6	M2-T		N	
7	0-MOTFL		N	

ELM 9 CONN. SP. MOTOR SUPPLY, P1, P2

PNT	SIGNAL NAME	COLOR LV	TYPE	F
1	+50.0V	2	Y	
2	0-MSPLY	0	Y	

GRP 12 1.727.342.00 SP. MOTOR FILTER

ELM 1 CONN. SP. MOTOR CTL, P01

PNT	SIGNAL NAME	COLOR LV	TYPE	F
1	0-MOTFL		N	
2	M1-R		N	
3	M1-R		N	
4	M1-S		N	
5	M1-S		N	
6	+5.0VMF		N	
7	C-MOTFLT		N	
8	M1-T		N	
9	M1-T		N	

ELM 2 CONN. SP. MOTOR CTL, P02

PNT	SIGNAL NAME	COLOR LV	TYPE	F
1	M2-R		N	
2	M2-R		N	
3	M2-S		N	
4	M2-S		N	
5	M2-T		N	
6	M2-T		N	
7	0-MOTFL		N	

ELM 3 CONN. SP. MOTOR LEFT J01

PNT	SIGNAL NAME	COLOR LV	TYPE	F
1	M1-R	2		
2	M1-S	9		
3	M1-T	6		

ELM 4 CONN. SP. MOTOR RIGHT J02

PNT	SIGNAL NAME	COLOR LV	TYPE	F
1	M2-R	2		
2	M2-S	9		
3	M2-T	6		

```
*****************************************************************************************************************************
*    STUDER REVOX AG   *    L O C A T I O N     P I N     L I S T            *  91/07/18  *  16:53  *   P A G E  17   *
*****************************************************************************************************************************
*              1.807.010.00  * STUDER  A 807 TAPE RECORDER 2 CH *             *  91/07/10 - 00                          *
*****************************************************************************************************************************
                                                                                                  <--  <--  <--  CONTINUATION
```

GRP 13 1.727.320.00
TAPE TENSION SENSOR

ELM 1
CONN. SP. MOTOR CTL, J02

PNT	SIGNAL NAME	COLOR LV	TYPE	F
1	0-TTS	0	N	
2	KEY			
3	+15.0V	2	N	
4	-15.0V	6	N	
5	AN-TTENS	9	N	

GRP 14 1.727.341.00
TAPE TENS. ADJUSTMENT

ELM 1
CONN. SP. MOTOR CTL, J01

PNT	SIGNAL NAME	COLOR LV	TYPE	F
1	TTA-SHT1	7	N	
2	TTA-SHT2	8	N	
3	TTA-SHT3	9	N	
4	TTA-LIBR	3	N	
6	TTA-REW	5	N	
8	TTA-FORW	6	N	
10	TTA-PLAY	4	N	
11	0-TTA	1	N	

GRP 15 1.021.260.00
SPOOLING MOTOR, LEFT

ELM 1
CONN. SP. MOTOR FILTER, J01

PNT	SIGNAL NAME	COLOR LV	TYPE	F
1	M1-R	2		
2	M1-S	9		
3	M1-T	6		

```
*****************************************************************************************************************************
*    STUDER REVOX AG   *    L O C A T I O N     P I N     L I S T            *  91/07/18  *  16:53  *   P A G E  18   *
*****************************************************************************************************************************
*              1.807.010.00  * STUDER  A 807 TAPE RECORDER 2 CH *             *  91/07/10 - 00                          *
*****************************************************************************************************************************
                                                                                                  <--  <--  <--  CONTINUATION
```

GRP 16 1.021.260.00
SPOOLING MOTOR, RIGHT

ELM 1
CONN. SP. MOTOR FILTER, J01

PNT	SIGNAL NAME	COLOR LV	TYPE	F
1	M2-R	2		
2	M2-S	9		
3	M2-T	6		

GRP 17 1.727.317.00
SP. MOTOR TACHO, LEFT

ELM 1
CONN. SP. MOTOR CTL, J05

PNT	SIGNAL NAME	COLOR LV	TYPE	F
1	0-TACH1	0	N	
2	+5.0V	5	N	
3	M1-TSENS	4	N	

GRP 18 1.727.318.00
SP. MOTOR TACHO, RIGHT

ELM 1
CONN. SP. MOTOR CTL, J04

PNT	SIGNAL NAME	COLOR LV	TYPE	F
1	0-TACH2	0	N	
2	+5.0V	5	N	
3	M2-TSENS	4	N	

```
*****************************************************************************************************************************
*    STUDER REVOX AG   *    L O C A T I O N     P I N     L I S T            *  91/07/18  *  16:53  *   P A G E  19   *
*****************************************************************************************************************************
*              1.807.010.00  * STUDER  A 807 TAPE RECORDER 2 CH *             *  91/07/10 - 00                          *
*****************************************************************************************************************************
                                                                                                  <--  <--  <--  CONTINUATION
```

GRP 20 1.727.330.24
CAPSTAN MOTOR CONTROL

ELM 1
CONN. TAPE DECK CTL. J01

PNT	SIGNAL NAME	COLOR LV	TYPE	F
1	M3-CLK	4	N	
2	M3-DATA	5	N	
3	M3-EN	3	N	
4	M3-C76K	1	N	
5	M3-SYNC	7	N	
6	+5.6V	5	N	
7	+0.0VD	0	N	
8	+15.0V	2	N	
9	+0.0VA	0	N	
10	-15.0V	6	N	
11	KEY			
12	M3-9600	2	N	
13	M3-REFEX	8	N	
14	M3-TACHO	6	N	

ELM 2
CONN. VARI SPEED CTL. J02

PNT	SIGNAL NAME	COLOR LV	TYPE	F
1	+0.0V	0	N	
2	KEY			
3	R-VRSPD	8	N	
4	+15.0V	2	N	

ELM 3
CONN. CAPSTAN TACHO J03

PNT	SIGNAL NAME	COLOR LV	TYPE	F
1	TACHO-3A	1	N	
2	TACHO-3B	9	N	
3	KEY		N	
4	HALL1A	7	N	
5	HALL1B	8	N	
6	HALL2A	5	N	
7	HALL2B	6	N	
8	HALL3A	3	N	
9	HALL3B	4	N	
10	+0.0V	0	N	
11	+1.2V	2	N	
12	CAP-GRD			

GRP 20 1.727.330.24
<-- <-- <-- CONTINUATION

ELM 4
CONN. CAPSTAN MOTOR J04

PNT	SIGNAL NAME	COLOR LV	TYPE	F
1	M3-R	0	N	
2	KEY		N	
3	M3-S	2	N	
4	M3-T	9	N	

ELM 5
CONN. CAPSTAN MOTOR SUPPLY P1, P2

PNT	SIGNAL NAME	COLOR LV	TYPE	F
1	+50.0V	2	Y	
2	0-MSPLY	0	Y	

GRP 21 1.021.605.00
CAPSTAN MOTOR

ELM 1
CONN. CAPSTAN CTL, J04

PNT	SIGNAL NAME	COLOR LV	TYPE	F
1	M3-R	0	N	
2	KEY		N	
3	M3-S	2	N	
4	M3-T	9	N	

ELM 2
CONN. CAPSTAN CTL, J03

PNT	SIGNAL NAME	COLOR LV	TYPE	F
1	TACHO-3A	1	N	
2	TACHO-3B	9	N	
3	KEY		N	
4	HALL1A	7	N	
5	HALL1B	8	N	
6	HALL2A	5	N	
7	HALL2B	6	N	
8	HALL3A	3	N	
9	HALL3B	4	N	
10	+1.2V	0	N	
11	+0.0V	2	N	
12	CAP-GRD			

```
*****************************************************************************************************************************
*   STUDER REVOX AG   *   L O C A T I O N   P I N   L I S T                  * 91/07/18 * 16:53 *  P A G E  20  *
*****************************************************************************************************************************
*            1.807.010.00  * STUDER  A 807 TAPE RECORDER 2 CH *                 * 91/07/10 - 00                          *
*****************************************************************************************************************************
                                                                                                  <--  <--  <--  CONTINUATION
```

GRP 24 1.727.321.00
TAPE MOVE SENSOR

ELM 1
CONN. TAPE DECK CTL. J03

PNT	SIGNAL NAME	COLOR	LV	TYPE	F
1	MV-CLK2	2		N	
2	0-MOVES	0		N	
3	MV-CLK1	1		N	
4	KEY				
5	+5.0V	5		N	

GRP 25 1.177.180.81
BRAKE CHASSIS

ELM 1
CONN. TAPE DECK CTL. J07

PNT	SIGNAL NAME	COLOR	LV	TYPE	F
1	K-BRAKE	1		X	
2	+24.0V	7		X	

GRP 26 1.727.135.81
PRESS SOLENOID

ELM 1
CONN. TAPE DECK CTL. J07

PNT	SIGNAL NAME	COLOR	LV	TYPE	F
1	+24.0V	7		X	
2	K-PRESS	9		X	

```
*****************************************************************************************************************************
*   STUDER REVOX AG   *   L O C A T I O N   P I N   L I S T                  * 91/07/18 * 16:53 *  P A G E  21  *
*****************************************************************************************************************************
*            1.807.010.00  * STUDER  A 807 TAPE RECORDER 2 CH *                 * 91/07/10 - 00                          *
*****************************************************************************************************************************
                                                                                                  <--  <--  <--  CONTINUATION
```

GRP 27 1.014.718.00
TAPE LIFT SOLENOID

ELM 1
CONN. TAPE DECK CTL. J07

PNT	SIGNAL NAME	COLOR	LV	TYPE	F
1	+24.0V	7		X	
2	K-LIFT	8		X	

GRP 30 1.727.662.00
COMMAND PANEL

ELM 1
CONN. SPEED INDICATORS

PNT	SIGNAL NAME	COLOR	LV	TYPE	F
1	B-FAST			N	
2	B-MID			N	
3	B-SLOW			N	

ELM 2
CONN. DISPLAY EL.

PNT	SIGNAL NAME	COLOR	LV	TYPE	F
1	+0.0VD			N	
2	DS-ENDPL			N	
3	DS-CLK			N	
4	DS-DATA			N	
5	+5.6V			N	

ELM 3
CONN. TAPE DECK CTL. J10

PNT	SIGNAL NAME	COLOR	LV	TYPE	F
1	SM-D0	8		D	
2	SM-D1	7		D	
3	SM-D2	6		D	
4	SM-D3	5		D	
5	SM-D4	4		D	
6	SM-D5	3		D	
7	SM-D6	2		D	
8	SM-D7	1		D	
9	DS-DATA	9		D	
10	DS-CLK	9		D	
11	DS-ENDPL	1		D	
12	DS-ENMTX	9		D	
13	DS-ENLDT	2		D	
14	DS-ENLDA	2		D	
15	KEY			D	
16	+0.0VD	0		D	
17	+5.6V	5		D	
18	+15.0V	2		D	
19	+0.0VA	0		D	
20	-15.0V	6		D	

./.

GRP 30 1.727.662.00
<-- <-- <-- CONTINUATION

ELM 4
CONN. KEYS MATRIX

PNT	SIGNAL NAME	COLOR	LV	TYPE	F
1	SM-D0	0		N	
2	SM-D1			N	
3	SM-D2			N	
4	SM-D3			N	
5	SM-D4			N	
6	SM-D5			N	
7	SM-D6			N	
8	SM-D7			N	
9	MRX-A			N	
10	MRX-B			N	
11	MRX-C			N	
12	MRX-D			N	
13	MRX-E	3		N	
14	MRX-F	4		N	
15	MRX-G			N	
16	MRX-H			N	
17				N	
18	KEY			N	
19	+0.0VD			N	
20	+5.6V			N	

ELM 5
CONN. VU-INPUT CH1

PNT	SIGNAL NAME	COLOR	LV	TYPE	F
1	A-VUMTR1	1		Y	

ELM 6
CONN. VU-INPUT CH2

PNT	SIGNAL NAME	COLOR	LV	TYPE	F
1	A-VUMTR2	1		Y	

ELM 7
SHUTTLE POTMETER

PNT	SIGNAL NAME	COLOR	LV	TYPE	F
1	R-SHUTL1	1		L	
2	R-SHUTL2	2		L	
3	R-SHUTL3	3		L	

STUDER REVOX AG * L O C A T I O N P I N L I S T * 91/07/18 * 16:53 * P A G E 22 *
1.807.010.00 * STUDER A 807 TAPE RECORDER 2 CH * * 91/07/10 - 00 *
<-- <-- <-- CONTINUATION

GRP 31 1.727.370.00
DISPLAY BOARD

ELM 1
CONN. COMMAND PANEL J01

PNT	SIGNAL NAME	COLOR	LV	TYPE	F
1	B-FAST			N	
2	B-MID			N	
3	B-SLOW			N	

ELM 2
CONN. COMMAND PANEL J02

PNT	SIGNAL NAME	COLOR	LV	TYPE	F
1	+0.0VD			N	
2	DS-ENDPL			N	
3	DS-CLK			N	
4	DS-DATA			N	
5	+5.6V			N	

GRP 35
LEVEL CONTROL PANEL

ELM 1
MIC LEVEL POTM. CH1

PNT	SIGNAL NAME	COLOR	LV	TYPE	F
1	A-LVMIC1	0		L	
2	A-LVMIB1	6		L	
3	A-LVMIA1	9		L	

ELM 2
LINE LEVEL POTM. CH1

PNT	SIGNAL NAME	COLOR	LV	TYPE	F
1	A-LVINC1	0		L	
2	A-LVINB1	2		L	
3	A-LVINA1	9		L	

ELM 3
MIC LEVEL POTM. CH2

PNT	SIGNAL NAME	COLOR	LV	TYPE	F
1	A-LVMIC2	0		L	
2	A-LVMIB2	6		L	
3	A-LVMIA2	9		L	

ELM 4
LINE LEVEL POTM. CH2

PNT	SIGNAL NAME	COLOR	LV	TYPE	F
1	A-LVINC2	0		L	
2	A-LVINB2	4		L	
3	A-LVINA2	9		L	

ELM 5
OUTPUT LEVEL POTM. CH1

PNT	SIGNAL NAME	COLOR	LV	TYPE	F
1	A-LVOUC1	0		L	
2	A-LVOUB1	5		L	
3	A-LVOUA1	9		L	

GRP 35
<-- <-- <-- CONTINUATION

ELM 6
OUTPUT LEVEL POTM. CH2

PNT	SIGNAL NAME	COLOR	LV	TYPE	F
1	A-LVOUC2	0		L	
2	A-LVOUB2	6		L	
3	A-LVOUA2	9		L	

ELM 7
VARIO SPEED POTM.

PNT	SIGNAL NAME	COLOR	LV	TYPE	F
1	+0.0V	0		L	
2	R-VRSPD	8		L	
3	+15.0V	2		L	

STUDER REVOX AG * L O C A T I O N P I N L I S T * 91/07/18 * 16:53 * P A G E 23 *
1.807.010.00 * STUDER A 807 TAPE RECORDER 2 CH * * 91/07/10 - 00 *
<-- <-- <-- CONTINUATION

GRP 36 54.24.0103
PHONES CONNECTOR

ELM 1
CONN. HEAD PHONES

PNT	SIGNAL NAME	COLOR	LV	TYPE	F
1	+0.0VA	0		L	
2	A-LSAMP2	3		L	
3	A-PHOUT2	2		L	
4	A-PHOUT1	1		L	
5	A-LSAMP1	8		L	

GRP 37 1.727.120.00
MONITOR

ELM 1
LOUDSPEAKER

PNT	SIGNAL NAME	COLOR	LV	TYPE	F
1	A-LSB	7		L	
2	A-LSA	6		L	

ELM 2
MONITOR VOLUME POTM.

PNT	SIGNAL NAME	COLOR	LV	TYPE	F
1	+0.0VA	0		L	
2	A-PHIN2	4		L	
3	A-LVMON2	9		L	
4	+0.0VA	0		L	
5	A-PHIN1	8		L	
6	A-LVMON1	9		L	
7	A-LVMON2	9		L	
8	A-PREOU2	3		L	
9	A-MONIT2	2		L	
10	A-PREOU1	5		L	
11	A-MONIT1	1		L	
12	A-LVMON1	9		L	

GRP 39 1.050.382.00
HEAD BLOCK ASSEMBLY

ELM 1
CONN. AUDIO ELECTRONICS

PNT	SIGNAL NAME	COLOR	LV	TYPE	F
1	REPHL-01	6		B	
2	REPHH-01	9		B	
3	REPSC-01	S		B	
4	RECHL-TC	6		B	
5	RECHH-TC	9		B	
6	RECSC-TC	S		B	
7	RECHL-01	7		B	
8	RECHH-01	8		B	
9	ERAHL-01	9		B	
10	ERAHH-01	1		B	
11					
12	TRS-K	2		B	
13	TRS-A	3		B	
14	REPHL-02	6		B	
15	REPHH-02	9		B	
16	REPSC-02	S		B	
17	ERAHL-TC	6		B	
18	ERAHH-TC	9		B	
19	ERASC-TC	S		B	
20	RECHL-02	0		B	
21	RECHH-02	1		B	
22	ERAHL-02	2		B	
23	ERAHH-02	3		B	
24	TRS-C	4		B	
25	TRS-E	5		B	

```
*****************************************************************************************************************************
*    STUDER REVOX AG    *    L O C A T I O N     P I N     L I S T           *  91/07/18  *  16:53  *   P A G E  24   *
*****************************************************************************************************************************
*              1.807.010.00  * STUDER  A 807 TAPE RECORDER 2 CH *            *  91/07/10 - 00                          *
*****************************************************************************************************************************
                                                                                          <--  <--  <--  CONTINUATION

GRP 40        1.727.670.00
    AUDIO CONTROL BOARD
=========================================

ELM  1
    CONN. TAPE DECK ELECTRONICS
-----------------------------------------
PNT SIGNAL NAME   COLOR LV TYPE          F
-----------------------------------------
 1  AS-STRAB       4        N
 2  AS-DATA        7        N
 3  AS-CLK         6        N
 4  AS-WREN        3        N
 5  AS-STR         5        N
 6  AS-STREC       4        N
 7  +0.0VD         0        N
 8  +5.6V          5        N
 9  +15.0V         2        N
10  +0.0VA         0        N
11  -15.0V         6        N
12  AS-FAD         1        N
13  AS-RESET       9        N
14  +48.0V         7        N
15  +0.0VD                  N
16  AS-HFCLK       8        N
17  +5.0V                   N
18  KEY
19                          N
20                          N
-----------------------------------------

ELM  2
    CONN. MONITOR
-----------------------------------------
PNT SIGNAL NAME   COLOR LV TYPE          F
-----------------------------------------
 1  A-MONIT2       2        N
 2  KEY                     N
 3  A-PREOU2       3        N
 4  A-PHIN2        4        N
 5  A-PHSW2A                N
 6  A-PHSW2B                N
 7  A-PHOUT2       2        N
 8  A-PHIN1        8        N
 9  A-PHSW1A                N
10  A-PHSW1B                N
11  A-PHOUT1       1        N
12  A-LSAMP2       3        N
13  A-LSAMP1       8        N
14  +0.0VA         0        N
15  +0.0VA         0        N
16  A-LSA          6        N
17  A-LSB          7        N
18                          N
19  A-PREOU1       5        N
20  A-MONIT1       1        N
-----------------------------------------

GRP 40        1.727.670.00
                <--  <--  <--  CONTINUATION
=========================================

ELM  3
    CONN. PHANTOM POWERING SWITCH
-----------------------------------------
PNT SIGNAL NAME   COLOR LV TYPE          F
-----------------------------------------
 1  A-PHTM3        9        N
 2  KEY
 3  A-PHTM2        8        N
 4  A-PHTM1        0        N
-----------------------------------------

ELM 12
    CONN. AUDIO CONTROL J12
-----------------------------------------
PNT SIGNAL NAME   COLOR LV TYPE          F
-----------------------------------------
 1  +0.0VD                  N
 2  +5.0VA                  N
 3                          N
 4  C-INITTC                N
 5  C-REC                   N
 6  C-EQM                   N
 7  C-EQS                   N
 8  C-EQF                   N
 9  +5.6V                   N
10                          N
11                          N
12                          N
13                          N
14                          N
15                          N
16                          N
17                          N
18  +15.0V                  N
19  -15.0V                  N
20  +0.0VA                  N
-----------------------------------------
                                                                                          ./.

GRP 40        1.727.670.00
                <--  <--  <--  CONTINUATION
=========================================

ELM 13
    CONN. AUDIO CONTROL J13
-----------------------------------------
PNT SIGNAL NAME   COLOR LV TYPE          F
-----------------------------------------
 1  C-REC1                  N
 2  C-REC2                  N
 3                          N
 4                          N
 5  C-SYNC1                 N
 6  C-REPRO1                N
 7                          N
 8                          N
 9  C-SYNC2                 N
10  C-REPRO2                N
11                          N
12                          N
13                          N
14                          N
15                          N
16                          N
17  C-INPUT1                N
18  C-INPUT2                N
19                          N
20                          N
-----------------------------------------

ELM 21
    CONN. AUDIO ELECTRONICS CH1
-----------------------------------------
PNT SIGNAL NAME   COLOR LV TYPE          F
-----------------------------------------
 1  U-PHTM                  N
 2  C-NAB                   N
 3  C-MICAT1                N
 4  A-PREOU1                N
 5  C-CALIN1                N
 6  C-UNCIN1                N
 7  C-MICON1                N
-----------------------------------------
                                                                                          ./.

*****************************************************************************************************************************
*    STUDER REVOX AG    *    L O C A T I O N     P I N     L I S T           *  91/07/18  *  16:53  *   P A G E  25   *
*****************************************************************************************************************************
*              1.807.010.00  * STUDER  A 807 TAPE RECORDER 2 CH *            *  91/07/10 - 00                          *
*****************************************************************************************************************************
                                                                                          <--  <--  <--  CONTINUATION

GRP 40        1.727.670.00
                <--  <--  <--  CONTINUATION
=========================================

ELM 22
    CONN. AUDIO ELECTRONICS CH1
-----------------------------------------
PNT SIGNAL NAME   COLOR LV TYPE          F
-----------------------------------------
 1  A-RECIN1                N
 2  C-ERASE1                N
 3  C-BIAS1                 N
 4  C-EQA                   N
 5  C-EQB                   N
 6  +5.0VA                  N
 7  WR-BIAS1                N
 8  A-D0                    N
 9  A-D1                    N
10  A-D2                    N
11  A-D3                    N
12  +0.0VD                  N
13  WR-REC1                 N
14  AS-STRAB                N
15  A-D4                    N
16  A-D5                    N
17  A-D6                    N
18  A-D7                    N
19  C-REC1                  N
20  A-HFIN                  N
-----------------------------------------

ELM 23
    CONN. AUDIO ELECTRONICS CH1
-----------------------------------------
PNT SIGNAL NAME   COLOR LV TYPE          F
-----------------------------------------
 1  +15.0V                  N
 2  -15.0V                  N
 3  C-BASS                  N
 4  A-SECRP1                N
 5  C-EQB                   N
 6  C-EQA                   N
 7  C-SYNC1                 N
 8  C-REPRO1                N
 9  C-SECRP1                N
10  A-CTALK1                N
11  +0.0VA                  N
12  +5.0VA                  N
13  +0.0VD                  N
-----------------------------------------
                                                                                          ./.

GRP 40        1.727.670.00
                <--  <--  <--  CONTINUATION
=========================================

ELM 24
    CONN. AUDIO ELECTRONICS CH1
-----------------------------------------
PNT SIGNAL NAME   COLOR LV TYPE          F
-----------------------------------------
 1  A-D0                    N
 2  A-D1                    N
 3  A-D2                    N
 4  A-D3                    N
 5  WR-REPR1                N
 6  AS-STRAB                N
 7  A-D4                    N
 8  A-D5                    N
 9  A-D6                    N
10  A-D7                    N
11  C-NAB                   N
12  A-DRVIN1                N
13  A-PREOU1                N
14  A-TAPOU1                N
15  C-INPUT1                N
16  C-CALOU1                N
17  C-UNCOU1                N
18  C-CUEAT                 N
19  C-OUTSW                 N
20  A-MONIT1                N
-----------------------------------------

ELM 31
    CONN. INSERT, INPUT CIRCUIT
-----------------------------------------
PNT SIGNAL NAME   COLOR LV TYPE          F
-----------------------------------------
 1  A-PREOU1                N
 2                          N
 3                          N
 4  A-RECIN1                N
 5  +5.0VA                  N
 6  +0.0VD                  N
 7  A-PREOU2                N
 8  -15.0V                  N
 9  A-RECIN2                N
-----------------------------------------
                                                                                          ./.

GRP 40        1.727.670.00
                <--  <--  <--  CONTINUATION
=========================================

ELM 32
    CONN. INSERT, INPUT CIRCUIT
-----------------------------------------
PNT SIGNAL NAME   COLOR LV TYPE          F
-----------------------------------------
 1  -15.0V                  N
 2  +0.0VA                  N
 3  +15.0V                  N
 4  C-INSERT                N
 5                          N
 6  C-EQS                   N
 7  C-EQM                   N
 8  C-EQF                   N
 9  C-EQN                   N
-----------------------------------------

ELM 33
    CONN. PREAMPLIFIER, SECOND REPRO
-----------------------------------------
PNT SIGNAL NAME   COLOR LV TYPE          F
-----------------------------------------
 1  -15.0V                  N
 2  +0.0VA                  N
 3  +15.0V                  N
 4                          N
 5                          N
 6                          N
 7                          N
 8                          N
 9                          N
-----------------------------------------

ELM 34
    CONN. PREAMLIFIER, SECOND REPRO
-----------------------------------------
PNT SIGNAL NAME   COLOR LV TYPE          F
-----------------------------------------
 1                          N
 2                          N
 3                          N
 4                          N
 5                          N
 6                          N
 7  A-SECRP1                N
 8  +0.0VA                  N
 9  A-SECRP2                N
-----------------------------------------
```

```
*****************************************************************************************************************************
*   STUDER REVOX AG   *   L O C A T I O N   P I N   L I S T          * 91/07/18 * 16:53 *  P A G E  26  *
*****************************************************************************************************************************
*            1.807.010.00  * STUDER  A 807 TAPE RECORDER 2 CH *       * 91/07/10 - 00                      *
*****************************************************************************************************************************
                                                                                          <--  <--  <--  CONTINUATION
```

GRP 40 1.727.670.00 <-- <-- <-- CONTINUATION

ELM 35
CONN. INSERT, OUTPUT CIRCUIT

PNT	SIGNAL NAME	COLOR	LV	TYPE	F
1	C-EQN			N	
2	C-EQF			N	
3	C-EQM			N	
4	C-EQS			N	
5	C-INSERT			N	
6	+5.0VA			N	
7	+0.0VD			N	
8				N	
9				N	

ELM 36
CONN. INSERT, OUTPUT CIRCUIT

PNT	SIGNAL NAME	COLOR	LV	TYPE	F
1				N	
2				N	
3	A-DRVIN2			N	
4	+0.0VA			N	
5	A-TAPOU2			N	
6	-15.0V			N	
7	A-DRVIN1			N	
8	+15.0V			N	
9	A-TAPOU1			N	

ELM 41
CONN. AUDIO ELECTRONICS CH2

PNT	SIGNAL NAME	COLOR	LV	TYPE	F
1	U-PHTM			N	
2	C-NAB			N	
3	C-MICAT2			N	
4	A-PREOU2			N	
5	C-CALIN2			N	
6	C-UNCIN2			N	
7	C-MICON2			N	

./.

GRP 40 1.727.670.00 <-- <-- <-- CONTINUATION

ELM 42
CONN. AUDIO ELECTRONICS CH2

PNT	SIGNAL NAME	COLOR	LV	TYPE	F
1	A-RECIN2			N	
2	C-ERASE2			N	
3	C-BIAS2			N	
4	C-EQA			N	
5	C-EQB			N	
6	+5.0VA			N	
7	WR-BIAS2			N	
8	A-D0			N	
9	A-D1			N	
10	A-D2			N	
11	A-D3			N	
12	+0.0VD			N	
13	WR-REC2			N	
14	AS-STRAB			N	
15	A-D4			N	
16	A-D5			N	
17	A-D6			N	
18	A-D7			N	
19	C-REC2			N	
20	A-HFIN			N	

ELM 43
CONN. AUDIO ELECTRONICS CH2

PNT	SIGNAL NAME	COLOR	LV	TYPE	F
1	+15.0V			N	
2	-15.0V			N	
3	C-BASS			N	
4	A-SECRP2			N	
5	C-EQB			N	
6	C-EQA			N	
7	C-SYNC2			N	
8	C-REPRO2			N	
9	C-SECRP2			N	
10	A-CTALK2			N	
11	+0.0VA			N	
12	+5.0VA			N	
13	+0.0VD			N	

GRP 40 1.727.670.00 <-- <-- <-- CONTINUATION

ELM 44
CONN. AUDIO ELECTRONICS CH2

PNT	SIGNAL NAME	COLOR	LV	TYPE	F
1	A-D0			N	
2	A-D1			N	
3	A-D2			N	
4	A-D3			N	
5	WR-REPR2			N	
6	AS-STRAB			N	
7	A-D4			N	
8	A-D5			N	
9	A-D6			N	
10	A-D7			N	
11	C-NAB			N	
12	A-DRVIN2			N	
13	A-PREOU2			N	
14	A-TAPOU2			N	
15	C-INPUT2			N	
16	C-CALOU2			N	
17	C-UNCOU2			N	
18	C-CUEAT			N	
19	C-OUTSW			N	
20	A-MONIT2			N	

```
*****************************************************************************************************************************
*   STUDER REVOX AG   *   L O C A T I O N   P I N   L I S T          * 91/07/18 * 16:53 *  P A G E  27  *
*****************************************************************************************************************************
*            1.807.010.00  * STUDER  A 807 TAPE RECORDER 2 CH *       * 91/07/10 - 00                      *
*****************************************************************************************************************************
                                                                                          <--  <--  <--  CONTINUATION
```

GRP 41 1.727.460.00
AUDIO ELECTRONICS CH1

ELM 1
CONN. MIC LEVEL POT, CH1

PNT	SIGNAL NAME	COLOR	LV	TYPE	F
1	A-LVMIA1	9		N	
2	KEY			N	
3	A-LVMIB1	6		N	
4	A-LVMIC1	S		N	

ELM 2
CONN. MIC AND LINE INPUTS, CH1

PNT	SIGNAL NAME	COLOR	LV	TYPE	F
1	A-LINA1	9		N	
2	A-LINB1	6		N	
3	A-LINS1	S		N	
4	KEY			N	
5	A-MICSS1	S		N	
6	A-MICSB1	6		N	
7	A-MICSA1	9		N	
8	+0.0VA			N	
9	A-MICSW1			N	
10	A-MICAS1			N	

ELM 3
CONN. LINE LEVEL POT, CH1

PNT	SIGNAL NAME	COLOR	LV	TYPE	F
1	A-LVINA1	9		N	
2	A-LVINB1	2		N	
3	KEY			N	
4	A-LVINC1	0		N	

ELM 4
CONN. HEAD BLOCK, RECORD

PNT	SIGNAL NAME	COLOR	LV	TYPE	F
1	RECHH-01	8		N	
2	RECHL-01	7		N	
3	ERAHH-01	1		N	
4	KEY			N	
5	ERAHL-01	9		N	

GRP 41 1.727.460.00 <-- <-- <-- CONTINUATION

ELM 5
CONN. HEAD BLOCK, REPRO

PNT	SIGNAL NAME	COLOR	LV	TYPE	F
1	REPHL-01	6		N	
2	REPHH-01	9		N	
3	KEY			N	
4	REPSC-01	S		N	

ELM 6
CONN. OUTPUT LEVEL POT, CH1

PNT	SIGNAL NAME	COLOR	LV	TYPE	F
1	A-LVOUA1	9		N	
2	KEY			N	
3	A-LVOUB1	5		N	
4	A-LVOUC1	0		N	

ELM 7
CONN. LINE OUTPUT CONNECTOR, CH1

PNT	SIGNAL NAME	COLOR	LV	TYPE	F
1	A-LOUTB1	3		N	
2	A-LOUTA1	2		N	
3	KEY			N	
4	A-VUMTR1	1		N	

ELM 11
CONN. AUDIO CTL, J21

PNT	SIGNAL NAME	COLOR	LV	TYPE	F
1	+48.0V			N	
2	C-NAB			N	
3	C-MICAT1			N	
4	A-PREOU1			N	
5	C-CALIN1			N	
6	C-UNCIN1			N	
7	C-MICON1			N	

./.

GRP 41 1.727.460.00 <-- <-- <-- CONTINUATION

ELM 12
CONN. AUDIO CTL, J22

PNT	SIGNAL NAME	COLOR	LV	TYPE	F
1	A-RECIN1			N	
2	C-ERASE1			N	
3	C-BIAS1			N	
4	C-EQA			N	
5	C-EQB			N	
6	+5.0VA			N	
7	WR-BIAS1			N	
8	A-D0			N	
9	A-D1			N	
10	A-D2			N	
11	A-D3			N	
12	+0.0VD			N	
13	WR-REC1			N	
14	AS-STRAB			N	
15	A-D4			N	
16	A-D5			N	
17	A-D6			N	
18	A-D7			N	
19	C-REC1			N	
20	A-HFIN1			N	

ELM 13
CONN. AUDIO CTL, J23

PNT	SIGNAL NAME	COLOR	LV	TYPE	F
1	+15.0V			N	
2	-15.0V			N	
3	C-BASS			N	
4	A-SECRP1			N	
5	C-EQB			N	
6	C-EQA			N	
7	C-SYNC1			N	
8	C-REPRO1			N	
9	C-SECRP1			N	
10	A-CTALK1			N	
11	+0.0VA			N	
12	+5.0VA			N	
13	+0.0VD			N	

./.

```
*    STUDER REVOX AG    *    L O C A T I O N    P I N    L I S T          * 91/07/18 * 16:53 *  P A G E  28  *
*              1.807.010.00  * STUDER  A 807 TAPE RECORDER 2 CH *          * 91/07/10 - 00                    *
                                                                  <--  <--  <--  CONTINUATION
```

GRP 41 1.727.460.00 <-- <-- <-- CONTINUATION

ELM 14
CONN. AUDIO CTL, J24

PNT	SIGNAL NAME	COLOR	LV	TYPE	F
1	A-D0			N	
2	A-D1			N	
3	A-D2			N	
4	A-D3			N	
5	WR-REPR1			N	
6	AS-STRAB			N	
7	A-D4			N	
8	A-D5			N	
9	A-D6			N	
10	A-D7			N	
11	C-NAB			N	
12	A-DRVIN1			N	
13	A-PREOU1			N	
14	A-TAPOU1			N	
15	C-INPUT1			N	
16	C-CALOU1			N	
17	C-UNCOU1			N	
18	C-CUEAT			N	
19	C-OUTSW			N	
20	A-MONIT1			N	

GRP 42 1.727.460.00 AUDIO ELECTRONICS CH2

ELM 1
CONN. MIC LEVEL POT, CH2

PNT	SIGNAL NAME	COLOR	LV	TYPE	F
1	A-LVMIA2	9		N	
2	KEY			N	
3	A-LVMIB2	6		N	
4	A-LVMIC2	S		N	

ELM 2
CONN. MIC AND LINE INPUTS, CH2

PNT	SIGNAL NAME	COLOR	LV	TYPE	F
1	A-LINA2	9		N	
2	A-LINB2	6		N	
3	A-LINS2	S		N	
4	KEY			N	
5	A-MICSS2	S		N	
6	A-MICSB2	6		N	
7	A-MICSA2	9		N	
8	+0.0VA			N	
9	A-MICSW2			N	
10	A-MICAS2			N	

ELM 3
CONN. LINE LEVEL POT, CH2

PNT	SIGNAL NAME	COLOR	LV	TYPE	F
1	A-LVINA2	9		N	
2	A-LVINB2	4		N	
3	KEY			N	
4	A-LVINC2	0		N	

ELM 4
CONN. HEAD BLOCK, RECORD

PNT	SIGNAL NAME	COLOR	LV	TYPE	F
1	RECHH-02	1		N	
2	RECHL-02	0		N	
3	ERAHH-02	3		N	
4	KEY			N	
5	ERAHL-02	2		N	

GRP 42 1.727.460.00 <-- <-- <-- CONTINUATION

ELM 5
CONN. HEAD BLOCK, REPRO

PNT	SIGNAL NAME	COLOR	LV	TYPE	F
1	REPHL-02	6		N	
2	REPHH-02	9		N	
3	KEY			N	
4	REPSC-02	S		N	

ELM 6
CONN. OUTPUT LEVEL POT, CH2

PNT	SIGNAL NAME	COLOR	LV	TYPE	F
1	A-LVOUA2	9		N	
2	KEY			N	
3	A-LVOUB2	6		N	
4	A-LVOUC2	0		N	

ELM 7
CONN. LINE OUTPUT CONNECTOR, CH2

PNT	SIGNAL NAME	COLOR	LV	TYPE	F
1	A-LOUTB2	3		N	
2	A-LOUTA2	2		N	
3	KEY			N	
4	A-VUMTR2	1		N	

ELM 11
CONN. AUDIO CTL, J41

PNT	SIGNAL NAME	COLOR	LV	TYPE	F
1	+48.0V			N	
2	C-NAB			N	
3	C-MICAT2			N	
4	A-PREOU2			N	
5	C-CALIN2			N	
6	C-UNCIN2			N	
7	C-MICON2			N	

./.

```
*    STUDER REVOX AG    *    L O C A T I O N    P I N    L I S T          * 91/07/18 * 16:53 *  P A G E  29  *
*              1.807.010.00  * STUDER  A 807 TAPE RECORDER 2 CH *          * 91/07/10 - 00                    *
                                                                  <--  <--  <--  CONTINUATION
```

GRP 42 1.727.460.00 <-- <-- <-- CONTINUATION

ELM 12
CONN. AUDIO CTL, J42

PNT	SIGNAL NAME	COLOR	LV	TYPE	F
1	A-RECIN2			N	
2	C-ERASE2			N	
3	C-BIAS2			N	
4	C-EQA			N	
5	C-EQB			N	
6	+5.0VA			N	
7	WR-BIAS2			N	
8	A-D0			N	
9	A-D1			N	
10	A-D2			N	
11	A-D3			N	
12	+0.0VD			N	
13	WR-REC2			N	
14	AS-STRAB			N	
15	A-D4			N	
16	A-D5			N	
17	A-D6			N	
18	A-D7			N	
19	C-REC2			N	
20	A-HFIN2			N	

ELM 13
CONN. AUDIO CTL, J43

PNT	SIGNAL NAME	COLOR	LV	TYPE	F
1	+15.0V			N	
2	-15.0V			N	
3	C-BASS			N	
4	A-SECRP2			N	
5	C-EQB			N	
6	C-EQA			N	
7	C-SYNC2			N	
8	C-REPRO2			N	
9	C-SECRP2			N	
10	A-CTALK2			N	
11	+0.0VA			N	
12	+5.0VA			N	
13	+0.0VD			N	

GRP 42 1.727.460.00 <-- <-- <-- CONTINUATION

ELM 14
CONN. AUDIO CTL, J44

PNT	SIGNAL NAME	COLOR	LV	TYPE	F
1	A-D0			N	
2	A-D1			N	
3	A-D2			N	
4	A-D3			N	
5	WR-REPR2			N	
6	AS-STRAB			N	
7	A-D4			N	
8	A-D5			N	
9	A-D6			N	
10	A-D7			N	
11	C-NAB			N	
12	A-DRVIN2			N	
13	A-PREOU2			N	
14	A-TAPOU2			N	
15	C-INPUT2			N	
16	C-CALOU2			N	
17	C-UNCOU2			N	
18	C-CUEAT			N	
19	C-OUTSW			N	
20	A-MONIT2			N	

GRP 43 1.727.430.00 PREAMPLIFIER F. SECOND HEAD

ELM 1
CONN. HEAD BLOCK,SEC REPRO

PNT	SIGNAL NAME	COLOR	LV	TYPE	F
1	SRPHL-02	6		N	
2	KEY			N	
3	SRPHH-02	9		N	
4	SRPSC-02	S		N	
5	SRPHL-01	6		N	
6	SRPHH-01	9		N	
7	SRPSC-01	S		N	

ELM 33
CONN. AUDIO CTL, J33

PNT	SIGNAL NAME	COLOR	LV	TYPE	F
1	-15.0V			N	
2	+0.0VA			N	
3	+15.0V			N	
4				N	
5				N	
6				N	
7				N	
8				N	
9				N	

ELM 34
CONN. AUDIO CTL, J34

PNT	SIGNAL NAME	COLOR	LV	TYPE	F
1				N	
2				N	
3				N	
4				N	
5				N	
6				N	
7	A-SECRP1			N	
8	+0.0VA			N	
9	A-SECRP2			N	

CONTINUATION

GRP 44 1.727.441.00
MONO/STEREO SWITCH, INPUT AMPL.

ELM 1
CONN. M/S ADJUSTMENT

PNT	SIGNAL NAME	COLOR LV	TYPE	F
1			N	
2	KEY		N	
3			N	
4	R-RECLVA	4	N	
5	R-RECLVB	5	N	
6	S-TG60	6	N	
7	S-TG125	7	N	
8	S-TG1K	8	N	
9	S-TG10K	9	N	
10	S-TG16K	0	N	
11	S-TGOFF	1	N	
12	S-TGO	2	N	
13	S-TGINHI	3	N	
14			N	
15			N	
16	S-TGATT	6	N	
17	S-TG10DB	7	N	
18	S-TG20DB	8	N	

ELM 2
CONN. M/S OUTPUT APML.

PNT	SIGNAL NAME	COLOR LV	TYPE	F
1	S-TG20DB	1	N	
2	S-TG10DB	2	N	
3	C-MONOB		N	
4	C-MONOA	4	N	
5			N	
6	KEY		N	
7			N	

./.

GRP 44 1.727.441.00
<-- <-- <-- CONTINUATION

ELM 31
CONN. AUDIO CTL, J31

PNT	SIGNAL NAME	COLOR LV	TYPE	F
1	A-PREOU1		N	
2			N	
3			N	
4	A-RECIN1		N	
5	+5.0VA		N	
6	+0.0VD		N	
7	A-PREOU2		N	
8			N	
9	A-RECIN2		N	

ELM 32
CONN. AUDIO CTL, J32

PNT	SIGNAL NAME	COLOR LV	TYPE	F
1	-15.0V		N	
2	+0.0VA		N	
3	+15.0V		N	
4	C-INSERT		N	
5			N	
6	C-EQS		N	
7	C-EQM		N	
8	C-EQF		N	
9	C-EQN		N	

GRP 45 1.727.442.00
MONO/STEREO SWITCH, OUTPUT AMPL.

ELM 1
CONN. M/S INPUT AMPL. J01

PNT	SIGNAL NAME	COLOR LV	TYPE	F
1	S-TG20DB	1	L	
2	S-TG10DB	2	L	
3	C-MONOB		L	
4	C-MONOA	4	L	

ELM 2
CONN. M/S ADJUSTMENT

PNT	SIGNAL NAME	COLOR LV	TYPE	F
1	R-REPLVB	3	Y	
2	R-REPLVA	1	Y	

ELM 35
CONN. AUDIO CTL, J35

PNT	SIGNAL NAME	COLOR LV	TYPE	F
1	C-EQN		N	
2	C-EQF		N	
3	C-EQM		N	
4	C-EQS		N	
5	C-INSERT		N	
6	+5.0VA		N	
7	+0.0VD		N	
8			N	
9			N	

ELM 36
CONN. AUDIO CTL, J36

PNT	SIGNAL NAME	COLOR LV	TYPE	F
1			N	
2			N	
3	A-DRVIN2		N	
4	+0.0VA		N	
5	A-TAPOU2		N	
6	-15.0V		N	
7	A-DRVIN1		N	
8	+15.0V		N	
9	A-TAPOU1		N	

CONTINUATION

GRP 46 1.727.443.00
MONO/STEREO SWITCH, ADJUSTMENT

ELM 1
CONN. M/S INPUT AMPL. J01

PNT	SIGNAL NAME	COLOR LV	TYPE	F
1	R-RECLVA	4	L	
2	R-RECLVB	5	L	
3	R-REPLVA	1	L	
4	R-REPLVB	3	L	

ELM 2
TEST GEN. LEVEL SWITCH

PNT	SIGNAL NAME	COLOR LV	TYPE	F
1				
2	S-TG10DB	2	L	
3	S-TG20DB	1	L	
4	S-TGATT	6	L	

ELM 3
TEST GEN. FREQUENCY SWITCH

PNT	SIGNAL NAME	COLOR LV	TYPE	F
1			L	
2	S-TG60	6	L	
3	S-TG125	7	L	
4	S-TG1K	8	L	
5	S-TG10K	9	L	
6	S-TG16K	0	L	
7	S-TGO	2	L	
11	S-TGOFF	1	L	
12	S-TGO		L	
13	S-TGO		L	
14	S-TGO		L	
15	S-TGO		L	
16	S-TGO		L	
17	S-TGINHI		L	

GRP 47 1.727.685.00
NRS-CONTROL

ELM 1
CONN. TO AUDIO CONTROL J12

PNT	SIGNAL NAME	COLOR LV	TYPE	F
1	+0.0VD		N	
2	+5.0VA		N	
3			N	
4	C-INITTC		N	
5	C-REC		N	
6	C-EQM		N	
7	C-EQS		N	
8	C-EQF		N	
9	+5.6V		N	
10			N	
11			N	
12			N	
13			N	
14			N	
15			N	
16			N	
17			N	
18	+15.0V		N	
19	-15.0V		N	
20	+0.0VA		N	

ELM 2
CONN. TO AUDIO CONTROL J13

PNT	SIGNAL NAME	COLOR LV	TYPE	F
1	C-REC1		N	
2	C-REC2		N	
3			N	
4			N	
5	C-SYNC1		N	
6	C-REPRO1		N	
7			N	
8			N	
9	C-SYNC2		N	
10	C-REPRO2		N	
11			N	
12			N	
13			N	
14			N	
15			N	
16			N	
17	C-INPUT1		N	
18	C-INPUT2		N	
19			N	
20			N	

GRP 47 1.727.685.00
<-- <-- <-- CONTINUATION

ELM 3
CONN. NRS CONTROL J3

PNT	SIGNAL NAME	COLOR LV	TYPE	F
1	+0.0VA		N	
2	-15.0V		N	
3	+15.0V		N	
4			N	
5			N	
6			N	
7			N	
8			N	
9			N	
10			N	
11			N	
12	+5.6V		N	
13	C-EQF		N	
14	C-EQS		N	
15	C-EQM		N	
16	C-REC		N	
17	C-INITTC		N	
18	KEY		N	
19	+5.0V		N	
20	+0.0VD		N	

ELM 4
CONN. NRS CONTROL J4

PNT	SIGNAL NAME	COLOR LV	TYPE	F
1			N	
2			N	
3	C-INPUT2		N	
4	C-INPUT1		N	
5			N	
6			N	
7			N	
8	KEY		N	
9			N	
10			N	
11	C-REPRO2		N	
12	C-SYNC2		N	
13			N	
14			N	
15	C-REPRO1		N	
16	C-SYNC1		N	
17			N	
18			N	
19	C-REC2		N	
20	C-REC1		N	

```
*****************************************************************************************************************
*    STUDER REVOX AG    *    L O C A T I O N     P I N     L I S T          * 91/07/18 * 16:53 *   P A G E  32   *
*****************************************************************************************************************
*              1.807.010.00  * STUDER  A 807 TAPE RECORDER 2 CH *           * 91/07/10 - 00                       *
*****************************************************************************************************************
                                                                                        <--  <--  <--  CONTINUATION
```

GRP 47 1.727.685.00
<-- <-- <-- CONTINUATION

ELM 5
CONN. NRS CONTROL J2

PNT	SIGNAL NAME	COLOR LV	TYPE	F
1	+0.0VD	0		N
2	KEY			
3	B-DBY-04	4		N
4	B-TLC-04	8		N
5	B-DBY-03	3		N
6	B-TLC-03	7		N
7	B-DBY-02	2		N
8	B-TLC-02	6		N
9				
10	B-DBY-01	1		N
11	B-TLC-01	5		N

GRP 48 1.727.432.00
RECORD INSERT AMPL.

ELM 1
CONN. RECORD INSERT

PNT	SIGNAL NAME	COLOR LV	TYPE	F
1	A-PREA-2	6		N
2				N
3	A-PREB-2	0		N
4				N
5	A-RECA-2	6		N
6	A-RECB-2	0		N
7				N
8	INSRT-ON	3		N
9				N
10				N
11	A-RECB-1	0		N
12	A-RECA-1	6		N
13	A-PREB-1	0		N
14				N
15	A-PREA-1	6		N

ELM 31
CONN. INSERT, INPUT CIRCUIT

PNT	SIGNAL NAME	COLOR LV	TYPE	F
1	A-PREOU1			N
2				N
3				N
4	A-RECIN1			N
5	+5.0VA			N
6	+0.0VD			N
7	A-PREOU2			N
8	-15.0V			N
9	A-RECIN2			N

ELM 32
CONN. INSERT, INPUT CIRCUIT

PNT	SIGNAL NAME	COLOR LV	TYPE	F
1	-15.0V			N
2	+0.0VA			N
3	+15.0V			N
4	C-INSERT			N
5				N
6	C-EQS			N
7	C-EQM			N
8	C-EQF			N
9	C-EQN			N

GRP 49 1.727.433.00
REPRODUCE INSERT AMPL.

ELM 1
CONN. REPRODUCE INSERT

PNT	SIGNAL NAME	COLOR LV	TYPE	F
1	A-TAPA-1	6		N
2				N
3	A-TAPB-1	0		N
4				N
5	A-DRVA-1	6		N
6	A-DRVB-1	0		N
7				N
8				N
9				N
10				N
11	A-DRVB-2	0		N
12	A-DRVA-2	6		N
13	A-TAPB-2	0		N
14				N
15	A-TAPA-2	6		N

ELM 35
CONN. INSERT, OUTPUT CIRCUIT

PNT	SIGNAL NAME	COLOR LV	TYPE	F
1	C-EQN			N
2	C-EQF			N
3	C-EQM			N
4	C-EQS			N
5	C-INSERT			N
6	+5.0VA			N
7	+0.0VD			N
8				N
9				N

ELM 36
CONN. INSERT, OUTPUT CIRCUIT

PNT	SIGNAL NAME	COLOR LV	TYPE	F
1				N
2				N
3	A-DRVIN2			N
4	+0.0VA			N
5	A-TAPOU2			N
6	-15.0V			N
7	A-DRVIN1			N
8	+15.0V			N
9	A-TAPOU1			N

```
*****************************************************************************************************************
*    STUDER REVOX AG    *    L O C A T I O N     P I N     L I S T          * 91/07/18 * 16:53 *   P A G E  33   *
*****************************************************************************************************************
*              1.807.010.00  * STUDER  A 807 TAPE RECORDER 2 CH *           * 91/07/10 - 00                       *
*****************************************************************************************************************
                                                                                        <--  <--  <--  CONTINUATION
```

GRP 51 1.727.652.00
AUDIO REMOTE CTL. IF.

ELM 1
AUDIO REMOTE CONTROL IF.

PNT	SIGNAL NAME	COLOR LV	TYPE	F
1	ARC-DPEN	6		N
2	ARC-DATA	2		N
3	ARC-CLK	3		N
4	ARC-MXEN	4		N
5	ARC-LDEN	5		N
6	+24V-RMT	7		N
7	+0.0VD	0		N
8	+0.0VD	0		N
9	ARC-D7	1		N
10	ARC-D4	4		N
11	KEY			
12	ARC-D0	9		N
13	ARC-D5	3		N
14	ARC-D6	2		N
15				

ELM 9
CONN. COMMAND PANEL J09

PNT	SIGNAL NAME	COLOR LV	TYPE	F
1	SM-D7	1		N
2	SM-D6	2		N
3	SM-D5	3		N
4	SM-D4	4		N
5	SM-D3	5		N
6	SM-D2	6		N
7	SM-D1	7		N
8	SM-D0	8		N
9	DS-DATA	9		N
10	DS-CLK	9		N
11	DS-ENDPL	1		N
12	DS-ENLDT	2		N
13	KEY			
14	+15.0V	2		N
15	-15.0V	6		N
16	+0.0VA	0		N
17	+5.6V	5		N
18	+0.0VD	0		N
19	DS-ENMTX	9		N
20	DS-ENLDA	2		N

GRP 51 1.727.652.00
<-- <-- <-- CONTINUATION

ELM 11
CONN. PARALLEL REMOTE A J11

PNT	SIGNAL NAME	COLOR LV	TYPE	F
1	FAD1	1		N
2	FAD2	2		N
3	IR-REFEX	3		N
4	KEY			
5	SR-FADRY	5		N
6	SR-LOCST	6		N
7	SR-LIFT	7		N
8	+0.0V	8		N
9	SR-PLAY	9		N
10	SR-FORW	0		N
11	SR-REW	1		N
12	SR-STOP	2		N
13	SR-REC	3		N
14	SR-VRSPD	4		N
15	SR-RESET	5		N
16	SR-ZLOC	6		N

ELM 12
CONN. PARALLEL REMOTE B J12

PNT	SIGNAL NAME	COLOR LV	TYPE	F
1	BR-PLAY	1		N
2	BR-FORW	2		N
3	BR-REW	3		N
4	BR-STOP	4		N
5	BR-REC	5		N
6	BR-VRSPD	6		N
7	BR-FADRY	7		N
8	BR-LOCST	8		N
9	KEY			
10	+24V-RMT	0		N

GRP 70 1.727.710.00
TIME CODE PROCESSOR

ELM 1
TO HEAD BLOCK CONNECTOR J01

PNT	SIGNAL NAME	COLOR LV	TYPE	F
1	ERAHL-TC			N
2	KEY			N
3	ERAHH-TC			N
4	ERASC-TC			N
5	RECHL-TC			N
6	RECHH-TC			N
7	RECSC-TC			N

ELM 2
CONN. AUDIO CONTROL J02

PNT	SIGNAL NAME	COLOR LV	TYPE	F
1	+0.0VD	1		N
2				N
3	KEY			N
4	C-INITTC	4		N
5	C-REC	5		N
6	C-EQM	6		N
7	C-EQS	7		N
8	C-EQF	8		N
9	+5.6V	9		N
10	MV-CLK1	0		N
11	KEY			N
12				N
13				N
14				N
15				N
16				N
17				N
18	+15.0V	8		N
19	-15.0V	9		N
20	+0.0VA	0		N

./.

```
*****************************************************************************************************************
*   STUDER REVOX AG   *   L O C A T I O N   P I N   L I S T   * 91/07/18 * 16:53 *  P A G E  34  *
*****************************************************************************************************************
*            1.807.010.00  * STUDER  A 807 TAPE RECORDER 2 CH *  * 91/07/10 - 00                              *
*****************************************************************************************************************
                                                                          <--  <--  <--  CONTINUATION
```

GRP 70 1.727.710.00 <-- <-- <-- CONTINUATION

ELM 3 — CONN. AUDIO CONTROL J03

PNT	SIGNAL NAME	COLOR LV	TYPE	F
1	C-REC1	1	N	
2	C-REC2	2	N	
3	C-REC3	3	N	
4	C-REC4	4	N	
5	C-SYNC1	5	N	
6	C-REPRO1	6	N	
7	C-SYNC3	7	N	
8	C-REPRO3	8	N	
9	C-SYNC2	9	N	
10	C-REPRO2	0	N	
11	C-SYNC4	1	N	
12	C-REPRO4	2	N	
13	KEY		N	
14			N	
15			N	
16	KEY		N	
17	C-INPUT1	7	N	
18	C-INPUT2	8	N	
19	C-INPUT3	9	N	
20	C-INPUT4	0	N	

ELM 4 — CONN. TAPE DECK SERIAL CTL. J04

PNT	SIGNAL NAME	COLOR LV	TYPE	F
1	RCVDATA	1	N	
2	+0.0V	0	N	
3	KEY		N	
4	+24V-RMT	8	N	
5	SN-DATA	2	N	

ELM 5 — CONN. RS 232 J05

PNT	SIGNAL NAME	COLOR LV	TYPE	F
1	RCVDATA	1	N	
2	KEY		N	
3	+0.0V	0	N	
4	+24V-RMT	8	N	
5	SN-DATA	2	N	

GRP 70 1.727.710.00 <-- <-- <-- CONTINUATION

ELM 6 — CONN. REMOTE DISPLAY J06

PNT	SIGNAL NAME	COLOR LV	TYPE	F
1	+0.0V	0	N	
2	DSP-DTCT	3	N	
3	TX-DSPLY	2	N	
4	+24V-RMT	7	N	
5	KEY		N	

ELM 7 — CONN. KEYBOARD CTL. J07

PNT	SIGNAL NAME	COLOR LV	TYPE	F
1	MRX-F	4	N	
2	KEY		N	
3	SM-DO	0	N	
4	KEY		N	
5	MRX-E	3	N	

ELM 8 — CONN. RES J08

PNT	SIGNAL NAME	COLOR LV	TYPE	F
1			N	
2			N	
3			N	
4			N	
5			N	
6			N	
7			N	
8			N	
9	KEY		N	
10			N	

./.

GRP 70 1.727.710.00 <-- <-- <-- CONTINUATION

ELM 9 — CONN. TIME CODE INPUT/OUTPUT XLR J09

PNT	SIGNAL NAME	COLOR LV	TYPE	F
1	TC-INSC	S	N	
2	TC-INA	9	N	
3	TC-INB	6	N	
4	TC-OUTSC	S	N	
5	KEY		N	
6	TC-OUTA	9	N	
7	TC-OUTB	6	N	

ELM 10 — CONN. TIME CODE WRITE/READ UNIT J10

PNT	SIGNAL NAME	COLOR LV	TYPE	F
20	TA-ACTTC			
21	+ 0.0VA			
22	+15.0V			
23	-15.0V			
24	+ 5.6V			
25	TD-C307K			
26	CA-SAFE			
27	CA-ADR-R			
28	CA-ADR-S			
29	CA-ADR-T			
30	CA-ADR-U			
31	CA-DATA0			
32	CA-DATA1			
33	CA-DATA2			
34	CA-DATA3			
35	CA-DATA4			
36	CA-DATA5			
37	CA-DATA6			
38	CA-DATA7			
39	CA-CHSTC			

./.

```
*****************************************************************************************************************
*   STUDER REVOX AG   *   L O C A T I O N   P I N   L I S T   * 91/07/18 * 16:53 *  P A G E  35  *
*****************************************************************************************************************
*            1.807.010.00  * STUDER  A 807 TAPE RECORDER 2 CH *  * 91/07/10 - 00                              *
*****************************************************************************************************************
                                                                          <--  <--  <--  CONTINUATION
```

GRP 70 1.727.710.00 <-- <-- <-- CONTINUATION

ELM 11 — CONN. TIME CODE WRITE/READ UNIT J11

PNT	SIGNAL NAME	COLOR LV	TYPE	F
1	T-TCINDL			
2	T-TCOUDL			
3				
4	ERAHH-TC			
5	ERAHL-TC			
6				
7	RECHH-TC			
8	RECHL-TC			
9				
10	REPHH-TC			
11	REPHL-TC			
12				
13				
14	T-TCPRES			
15	LINFA-TC			
16	LINFB-TC			
17	LOUFA-TC			
18	LOUFB-TC			

./.

GRP 70 1.727.710.00 <-- <-- <-- CONTINUATION

ELM 21 — TIME CODE WRITE/READ UNIT

PNT	SIGNAL NAME	COLOR LV	TYPE	F
1	T-TCINDL			
2	T-TCOUDL			
3				
4	ERAHH-TC			
5	ERAHL-TC			
6				
7	RECHH-TC			
8	RECHL-TC			
9				
10	REPHH-TC			
11	REPHL-TC			
12				
13				
14	T-TCPRES			
15	LINFA-TC			
16	LINFB-TC			
17	LOUFA-TC			
18	LOUFB-TC			
19	KEY			
20	TA-ACTTC			
21	+ 0.0V			
22	+15.0V			
23	-15.0V			
24	+ 5.6V			
25	TD-C307K			
26	CA-SAFE			
27	CA-ADR-R			
28	CA-ADR-S			
29	CA-ADR-T			
30	CA-ADR-U			
31	CA-DATA0			
32	CA-DATA1			
33	CA-DATA2			
34	CA-DATA3			
35	CA-DATA4			
36	CA-DATA5			
37	CA-DATA6			
38	CA-DATA7			
39	CA-CHSTC			

GRP 92 1.727.928.00 EXT. VU PANEL

ELM 1 — CONN. VU PANEL, CTL

PNT	SIGNAL NAME	COLOR LV	TYPE	F
1	EXT-D7	7	N	
2	EX-ENMTX	5	N	
3	EXT-D6	6	N	
4	EXT-DATA	9	N	
5	EXT-CLK	3	N	
6	EX-ENLDA	1	N	
7			N	
8	KEY		N	
9	+15.0V	2	N	
10	-15.0V	6	N	
11	+0.0VA	0	N	
12	+5.6V	5	N	
13	+0.0VD	0	N	

ELM 2 — CONN. VU PANEL, AUDIO

PNT	SIGNAL NAME	COLOR LV	TYPE	F
1	A-AUX1		N	
2	A-AUXSC1		N	
3	A-PREOU1	9	N	
4	A-PROSC1	S	N	
5	A-MONIT1	9	N	
6	A-MONSC1	S	N	
7	A-AUX2		N	
8	A-AUXSC2		N	
9	A-MONIT2	9	N	
10	A-MONSC2	S	N	
11	A-PREOU2	9	N	
12	A-PROSC2	S	N	
13	A-PHIN2	9	N	
14	A-PHISC2	S	N	
15	A-PHIN1	9	N	
16	A-PHISC1	S	N	
17			N	
18	KEY		N	
19	A-LSA	6	N	
20	A-LSB	7	N	

```
*****************************************************************************************************************************
*   STUDER REVOX AG   *   L  O  C  A  T  I  O  N    P  I  N    L  I  S  T          *  91/07/18  *  16:53  *   P A G E  36   *
*****************************************************************************************************************************
*              1.807.010.00  * STUDER  A 807 TAPE RECORDER 2 CH *                  *  91/07/10 - 00                          *
*****************************************************************************************************************************
                                                                                                  <--  <--  <--  CONTINUATION

GRP 92        1.727.928.00
             <--  <--  <--  CONTINUATION
========================================

ELM  3
    CONN. LEVEL CONTROL, AUDIO
----------------------------------------
PNT SIGNAL NAME  COLOR LV TYPE          F
----------------------------------------
 1  A-LVMOC1              N
 2  KEY                   N
 3  A-LVMOB1              N
 4  A-LVMOA1              N
 5  A-LVMOC2              N
 6  A-LVMOB2              N
 7  A-LVMOA2              N
----------------------------------------

ELM  4
    CONN. LEVEL CONTROL, AUDIO
----------------------------------------
PNT SIGNAL NAME  COLOR LV TYPE          F
----------------------------------------
 1  A-LVINA2              N
 2  A-LVIND2              N
 3  A-LVINC2              N
 4  A-LVOUA2              N
 5  A-LVOUD2              N
 6  A-LVOUC2              N
 7  A-LVINA1              N
 8  A-LVIND1              N
 9  A-LVINC1              N
10  A-LVOUA1              N
11  A-LVOUD1              N
12  KEY                   N
13  A-LVOUC1              N
----------------------------------------

ELM  5
    CONN. LEVEL CONTROL, AUDIO
----------------------------------------
PNT SIGNAL NAME  COLOR LV TYPE          F
----------------------------------------
 1  A-LVINA2      9       N
 2  A-LVINB2      6       N
 3  A-LVINC2      S       N
 4  A-LVOUA2      9       N
 5  A-LVOUB2      6       N
 6  A-LVOUC2      S       N
 7  A-LVINA1      9       N
 8  A-LVINB1      6       N
 9  A-LVINC1      S       N
10  A-LVOUA1      9       N
11  KEY                   N
12  A-LVOUB1      6       N
13  A-LVOUC1      S       N
----------------------------------------
```

```
*    STUDER REVOX AG   *    S I G N A L     W I R E     L I S T                 * 91/07/18 * 16:53 *   P A G E  37   *
*              1.807.010.00  * STUDER  A 807 TAPE RECORDER 2 CH *                 * 91/07/10 - 00                      *
```

SIGNAL NAME	COLOR	MI	ASY	GRP	ELM	PNT	S	LV	TYPE	DESCRIPTION OF ELEMENT		REMARK	ELEMENT NR.
0-AUDIO	0			1	9	4			A	CONN. EXT. VU PANEL, AUDIO			
0-MOTFL				11	7	1			N	CONN. SP. MOTOR FILTER, LEFT	J07		
				11	8	7			N	CONN. SP. MOTOR FILTER, RIGHT	J08		
				12	1	1			N	CONN. SP. MOTOR CTL,	P01		
				12	2	7			N	CONN. SP. MOTOR CTL,	P02		
0-MOVES	0			10	3	1			N	CONN. MOVE SENSOR	J03		
	0			24	1	2			N	CONN. TAPE DECK CTL. J03			
0-MSPLY	0			7	1	2			L	CHARGE CAPACITOR CHC1			
	0			8	1	4			J	RECTIFIER DZ2			
	0			11	9	2			Y	CONN. SP. MOTOR SUPPLY,	P1, P2		
	0			20	5	2			Y	CONN. CAPSTAN MOTOR SUPPLY	P1, P2		
0-TACH1	0			11	5	1			N	CONN. SP. MOTOR TACHO, LEFT	J05		
	0			17	1	1			N	CONN. SP. MOTOR CTL, J05			
0-TACH2	0			11	4	1			N	CONN. SP. MOTOR TACHO, RIGHT	J04		
	0			18	1	1			N	CONN. SP. MOTOR CTL, J04			
0-TTA	1			11	1	1			N	CONN. TAPE TENS. ADJUSTMENT	J01		
	1			14	1	11			N	CONN. SP. MOTOR CTL, J01			
0-TTS	0			11	2	1			N	CONN. TAPE TENS. SENSOR	J02		
	0			13	1	1			N	CONN. SP. MOTOR CTL, J02			
17VAC	3			6	4	3			N	CONN. TAPE DECK ELECTRONICS	J04		
	3			10	1	1			C	CONNECTOR POWER SUPPLY	J01		
+ 0.0V				70	21	21				TIME CODE WRITE/READ UNIT			
+ 0.0VA				70	10	21				CONN. TIME CODE WRITE/READ UNIT	J10		
+ 5.6V				70	10	24				CONN. TIME CODE WRITE/READ UNIT	J10		
				70	21	24				TIME CODE WRITE/READ UNIT			
+0.0V	0			1	3	9			B	SERIAL CTL. CONNECTOR			
	0			1	4	9			B	TC REMOTE DISPLAY CONNECTOR			
	8			1	6	1			B	PARALLEL REMOTE CONNECTOR			
	8			1	7	1			B	SYNCHRONIZER CONNECTOR			
	5			1	7	14			B	SYNCHRONIZER CONNECTOR			
	1			6	4	16			N	CONN. TAPE DECK ELECTRONICS	J04		
	4			6	4	17			N	CONN. TAPE DECK ELECTRONICS	J04		
	0			6	4	18			N	CONN. TAPE DECK ELECTRONICS	J04		
	0			10	1	5			C	CONNECTOR POWER SUPPLY	J01		
	4			10	1	7			C	CONNECTOR POWER SUPPLY	J01		
	1			10	1	9			C	CONNECTOR POWER SUPPLY	J01		
	0			10	4	3			B	CONN. SERIAL CTL.	J04		
	8			10	11	8			N	CONN. PARALLEL REMOTE A	J11		
	8			10	13	8			N	CONN. SYNCHRONIZER A	J13		
	5			10	13	15			N	CONN. SYNCHRONIZER A	J13		
	0			20	2	1			N	CONN. VARI SPEED CTL.	J02		
	0			20	3	10			N	CONN. CAPSTAN TACHO	J03		

./.

```
*    STUDER REVOX AG   *    S I G N A L     W I R E     L I S T                 * 91/07/18 * 16:53 *   P A G E  38   *
*              1.807.010.00  * STUDER  A 807 TAPE RECORDER 2 CH *                 * 91/07/10 - 00                      *
```

SIGNAL NAME	COLOR	MI	ASY	GRP	ELM	PNT	S	LV	TYPE	DESCRIPTION OF ELEMENT		REMARK	ELEMENT NR.
<<-- CONT.OF	2			21	2	11			N	CONN. CAPSTAN CTL, J03			
+0.0V	0			35	7	1			L	VARIO SPEED POTM.			
	8			51	11	8			N	CONN. PARALLEL REMOTE A	J11		
	0			70	4	2			N	CONN. TAPE DECK SERIAL CTL.	J04		
	0			70	5	3			N	CONN. RS 232	J05		
	0			70	6	1			N	CONN. REMOTE DISPLAY	J06		
+0.0VA	0			1	8	14			B	CONN. EXT. VU PANEL, CTL			
	0			10	2	13			N	CONN. CAPSTAN CTL.	J02		
	0			10	6	18			N	CONN. SPOOLING MOTOR CTL.	J06		
	0			10	8	12			N	CONN. EXT. VU-PANEL	J08		
	0			10	9	16			N	CONN. COMMAND PANEL	J09		
	0			10	10	13			N	CONN. AUDIO CTL.	J10		
	0			11	3	12			N	CONN. TAPE DECK CTL.	J03		
	0			20	1	9			N	CONN. TAPE DECK CTL.	J01		
	0			30	3	19			D	CONN. TAPE DECK CTL. J10			
	0			36	1	1			L	CONN. HEAD PHONES			
	0			37	2	1			L	MONITOR VOLUME POTM.			
	0			37	2	4			L	MONITOR VOLUME POTM.			
	0			40	1	10			N	CONN. TAPE DECK ELECTRONICS			
	0			40	2	14			N	CONN. MONITOR			
	0			40	2	15			N	CONN. MONITOR			
				40	12	20			N	CONN. AUDIO CONTROL J12			
				40	23	11			N	CONN. AUDIO ELECTRONICS CH1			
				40	32	2			N	CONN. INSERT, INPUT CIRCUIT			
				40	33	2			N	CONN. PREAMPLIFIER, SECOND REPRO			
				40	34	8			N	CONN. PREAMLIFIER, SECOND REPRO			
				40	36	4			N	CONN. INSERT, OUTPUT CIRCUIT			
				40	43	11			N	CONN. AUDIO ELECTRONICS CH2			
				41	2	8			N	CONN. MIC AND LINE INPUTS, CH1			
				41	13	11			N	CONN. AUDIO CTL, J23			
				42	2	8			N	CONN. MIC AND LINE INPUTS, CH2			
				42	13	11			N	CONN. AUDIO CTL, J43			
				43	33	2			N	CONN. AUDIO CTL, J33			
				43	34	8			N	CONN. AUDIO CTL, J34			
				44	32	2			N	CONN. AUDIO CTL, J32			
				45	36	4			N	CONN. AUDIO CTL, J36			
				47	1	20			N	CONN. TO AUDIO CONTROL J12			
				47	3	1			N	CONN. NRS CONTROL J3			
				48	32	2			N	CONN. INSERT, INPUT CIRCUIT			
				49	36	4			N	CONN. INSERT, OUTPUT CIRCUIT			
	0			51	9	16			N	CONN. COMMAND PANEL	J09		
	0			70	2	20			N	CONN. AUDIO CONTROL	J02		
	0			92	1	11			N	CONN. VU PANEL, CTL			
+0.0VD	0			1	5	15			B	NRS CONTROL CONNECTOR			
	0			1	8	1			B	CONN. EXT. VU PANEL, CTL			
	0			1	10	1			B	AUDIO REMOTE CONTROL CONN.			
	0			1	10	8			B	AUDIO REMOTE CONTROL CONN.			
	0			10	2	14			N	CONN. CAPSTAN CTL.	J02		
	0			10	6	17			N	CONN. SPOOLING MOTOR CTL.	J06		
	0			10	8	14			N	CONN. EXT. VU-PANEL	J08		
	0			10	9	18			N	CONN. COMMAND PANEL	J09		
	0			10	10	11			N	CONN. AUDIO CTL.	J10		

```
*    STUDER REVOX AG    *    S I G N A L    W I R E    L I S T                    * 91/07/18 * 16:53 *   P A G E 39   *
*              1.807.010.00  * STUDER  A 807 TAPE RECORDER 2 CH *                  * 91/07/10 - 00                      *
```

SIGNAL NAME	COLOR	MI	ASY	GRP	ELM	PNT	S	LV	TYPE	DESCRIPTION OF ELEMENT		REMARK	ELEMENT NR.
<<-- CONT.OF	0			11	3	18			N	CONN. TAPE DECK CTL.	J03		
+0.0VD	0			20	1	7			N	CONN. TAPE DECK CTL.	J01		
				30	2	1			N	CONN. DISPLAY EL.			
	0			30	3	16			D	CONN. TAPE DECK CTL. J10			
				30	4	19			N	CONN. KEYS MATRIX			
				31	2	1			N	CONN. COMMAND PANEL J02			
	0			40	1	7			N	CONN. TAPE DECK ELECTRONICS			
				40	1	15			N	CONN. TAPE DECK ELECTRONICS			
				40	12	1			N	CONN. AUDIO CONTROL J12			
				40	22	12			N	CONN. AUDIO ELECTRONICS CH1			
				40	23	13			N	CONN. AUDIO ELECTRONICS CH1			
				40	31	6			N	CONN. INSERT, INPUT CIRCUIT			
				40	35	7			N	CONN. INSERT, OUTPUT CIRCUIT			
				40	42	12			N	CONN. AUDIO ELECTRONICS CH2			
				40	43	13			N	CONN. AUDIO ELECTRONICS CH2			
				41	12	12			N	CONN. AUDIO CTL, J22			
				41	13	13			N	CONN. AUDIO CTL, J23			
				42	12	12			N	CONN. AUDIO CTL, J42			
				42	13	13			N	CONN. AUDIO CTL, J43			
				44	31	6			N	CONN. AUDIO CTL, J31			
				45	35	7			N	CONN. AUDIO CTL, J35			
				47	1	1			N	CONN. TO AUDIO CONTROL J12			
				47	3	20			N	CONN. NRS CONTROL J3			
	0			47	5	1			N	CONN. NRS CONTROL J2			
				48	31	6			N	CONN. INSERT, INPUT CIRCUIT			
				49	35	7			N	CONN. INSERT, OUTPUT CIRCUIT			
	0			51	1	7			N	AUDIO REMOTE CONTROL IF.			
	0			51	1	8			N	AUDIO REMOTE CONTROL IF.			
	0			51	9	18			N	CONN. COMMAND PANEL	J09		
	1			70	2	1			N	CONN. AUDIO CONTROL	J02		
	0			92	1	13			N	CONN. VU PANEL, CTL			
+1.2V	2			20	3	11			N	CONN. CAPSTAN TACHO	J03		
	0			21	2	10			N	CONN. CAPSTAN CTL, J03			
+15.0V	2			1	8	3			B	CONN. EXT. VU PANEL, CTL			
	2			10	2	12			N	CONN. CAPSTAN CTL.	J02		
	2			10	6	20			N	CONN. SPOOLING MOTOR CTL.	J06		
	2			10	8	10			N	CONN. EXT. VU-PANEL	J08		
	2			10	9	14			N	CONN. COMMAND PANEL	J09		
	2			10	10	14			N	CONN. AUDIO CTL.	J10		
	2			11	2	5			N	CONN. TAPE TENS. SENSOR	J02		
	2			11	3	16			N	CONN. TAPE DECK CTL.	J03		
	2			13	1	3			N	CONN. SP. MOTOR CTL, J02			
	2			20	1	8			N	CONN. TAPE DECK CTL.	J01		
	2			20	2	4			N	CONN. VARI SPEED CTL.	J02		
	2			30	3	18			D	CONN. TAPE DECK CTL. J10			
	2			35	7	3			L	VARIO SPEED POTM.			
	2			40	1	9			N	CONN. TAPE DECK ELECTRONICS			
				40	12	18			N	CONN. AUDIO CONTROL J12			
				40	23	1			N	CONN. AUDIO ELECTRONICS CH1			
				40	32	3			N	CONN. INSERT, INPUT CIRCUIT			
				40	33	3			N	CONN. PREAMPLIFIER, SECOND REPRO			
				40	36	8			N	CONN. INSERT, OUTPUT CIRCUIT			

```
*    STUDER REVOX AG    *    S I G N A L    W I R E    L I S T                    * 91/07/18 * 16:53 *   P A G E 40   *
*              1.807.010.00  * STUDER  A 807 TAPE RECORDER 2 CH *                  * 91/07/10 - 00                      *
```

SIGNAL NAME	COLOR	MI	ASY	GRP	ELM	PNT	S	LV	TYPE	DESCRIPTION OF ELEMENT		REMARK	ELEMENT NR.
<<-- CONT.OF				40	43	1			N	CONN. AUDIO ELECTRONICS CH2			
+15.0V				41	13	1			N	CONN. AUDIO CTL, J23			
				42	13	1			N	CONN. AUDIO CTL, J43			
				43	33	3			N	CONN. AUDIO CTL, J33			
				44	32	3			N	CONN. AUDIO CTL, J32			
				45	36	8			N	CONN. AUDIO CTL, J36			
				47	1	18			N	CONN. TO AUDIO CONTROL J12			
				47	3	3			N	CONN. NRS CONTROL J3			
				48	32	3			N	CONN. INSERT, INPUT CIRCUIT			
				49	36	8			N	CONN. INSERT, OUTPUT CIRCUIT			
	2			51	9	14			N	CONN. COMMAND PANEL	J09		
	8			70	2	18			N	CONN. AUDIO CONTROL	J02		
				70	10	22				CONN. TIME CODE WRITE/READ UNIT	J10		
				70	21	22				TIME CODE WRITE/READ UNIT			
	2			92	1	9			N	CONN. VU PANEL, CTL			
+20.0V				6	4	1				CONN. TAPE DECK ELECTRONICS	J04		
	2			6	4	14			N	CONN. TAPE DECK ELECTRONICS	J04		
	2			10	1	6			C	CONNECTOR POWER SUPPLY	J01		
+24.0V	7			1	5	14			B	NRS CONTROL CONNECTOR			
				6	4	6			N	CONN. TAPE DECK ELECTRONICS	J04		
				6	4	7			N	CONN. TAPE DECK ELECTRONICS	J04		
	7			6	4	8			N	CONN. TAPE DECK ELECTRONICS	J04		
	7			6	4	9			N	CONN. TAPE DECK ELECTRONICS	J04		
	7			6	4	10			N	CONN. TAPE DECK ELECTRONICS	J04		
	7			6	4	11			N	CONN. TAPE DECK ELECTRONICS	J04		
	7			6	4	12			N	CONN. TAPE DECK ELECTRONICS	J04		
	7			6	4	13			N	CONN. TAPE DECK ELECTRONICS	J04		
	7			10	1	10			C	CONNECTOR POWER SUPPLY	J01		
	7			25	1	2			X	CONN. TAPE DECK CTL. J07			
	7			26	1	1			X	CONN. TAPE DECK CTL. J07			
	7			27	1	1			X	CONN. TAPE DECK CTL. J07			
+24V-RMT	8			1	3	5			B	SERIAL CTL. CONNECTOR			
	7			1	4	5			B	TC REMOTE DISPLAY CONNECTOR			
	0			1	6	25			B	PARALLEL REMOTE CONNECTOR			
	9			1	7	25			B	SYNCHRONIZER CONNECTOR			
	7			1	10	15			B	AUDIO REMOTE CONTROL CONN.			
	8			6	4	4			N	CONN. TAPE DECK ELECTRONICS	J04		
	8			10	1	3			C	CONNECTOR POWER SUPPLY	J01		
	8			10	4	4			B	CONN. SERIAL CTL.	J04		
	0			10	12	10			N	CONN. PARALLEL REMOTE B	J12		
	9			10	14	9			N	CONN. SYNCHRONIZER B	J14		
	7			51	1	6			N	AUDIO REMOTE CONTROL IF.			
	0			51	12	10			N	CONN. PARALLEL REMOTE B	J12		
	8			70	4	4			N	CONN. TAPE DECK SERIAL CTL.	J04		
	8			70	5	4			N	CONN. RS 232	J05		
	7			70	6	4			N	CONN. REMOTE DISPLAY	J06		
+48.0V	7			10	10	12			N	CONN. AUDIO CTL.	J10		
	7			40	1	14			N	CONN. TAPE DECK ELECTRONICS			
				41	11	1			N	CONN. AUDIO CTL, J21			
				42	11	1			N	CONN. AUDIO CTL, J41			

* STUDER REVOX AG * S I G N A L W I R E L I S T * 91/07/18 * 16:53 * P A G E 41 *

* 1.807.010.00 * STUDER A 807 TAPE RECORDER 2 CH * * 91/07/10 - 00 *

SIGNAL NAME	COLOR	MI	ASY	GRP	ELM	PNT	S	LV	TYPE	DESCRIPTION OF ELEMENT		REMARK	ELEMENT NR.
+5.0V	5			10	3	2			N	CONN. MOVE SENSOR	J03		
	5			11	4	2			N	CONN. SP. MOTOR TACHO, RIGHT	J04		
	5			11	5	3			N	CONN. SP. MOTOR TACHO, LEFT	J05		
	5			17	1	2			N	CONN. SP. MOTOR CTL, J05			
	5			18	1	2			N	CONN. SP. MOTOR CTL, J04			
	5			24	1	5			N	CONN. TAPE DECK CTL. J03			
				40	1	17			N	CONN. TAPE DECK ELECTRONICS			
				47	3	19			N	CONN. NRS CONTROL J3			
+5.0VA				40	12	2			N	CONN. AUDIO CONTROL J12			
				40	22	6			N	CONN. AUDIO ELECTRONICS CH1			
				40	23	12			N	CONN. AUDIO ELECTRONICS CH1			
				40	31	5			N	CONN. INSERT, INPUT CIRCUIT			
				40	35	6			N	CONN. INSERT, OUTPUT CIRCUIT			
				40	42	6			N	CONN. AUDIO ELECTRONICS CH2			
				40	43	12			N	CONN. AUDIO ELECTRONICS CH2			
				41	12	6			N	CONN. AUDIO CTL, J22			
				41	13	12			N	CONN. AUDIO CTL, J23			
				42	12	6			N	CONN. AUDIO CTL, J42			
				42	13	12			N	CONN. AUDIO CTL, J43			
				44	31	5			N	CONN. AUDIO CTL, J31			
				45	35	6			N	CONN. AUDIO CTL, J35			
				47	1	2			N	CONN. TO AUDIO CONTROL J12			
				48	31	5			N	CONN. INSERT, INPUT CIRCUIT			
				49	35	6			N	CONN. INSERT, OUTPUT CIRCUIT			
+5.0VMF				11	7	6			N	CONN. SP. MOTOR FILTER, LEFT	J07		
				12	1	6			N	CONN. SP. MOTOR CTL,	P01		
+5.6V	5			1	8	2			B	CONN. EXT. VU PANEL, CTL			
	5			10	2	15			N	CONN. CAPSTAN CTL.	J02		
	5			10	6	16			N	CONN. SPOOLING MOTOR CTL.	J06		
	5			10	8	13			N	CONN. EXT. VU-PANEL	J08		
	5			10	9	17			N	CONN. COMMAND PANEL	J09		
	5			10	10	10			N	CONN. AUDIO CTL.	J10		
	5			11	3	19			N	CONN. TAPE DECK CTL.	J03		
	5			20	1	6			N	CONN. TAPE DECK CTL.	J01		
				30	2	5			N	CONN. DISPLAY EL.			
	5			30	3	17			D	CONN. TAPE DECK CTL. J10			
				30	4	20			N	CONN. KEYS MATRIX			
				31	2	5			N	CONN. COMMAND PANEL J02			
	5			40	1	8			N	CONN. TAPE DECK ELECTRONICS			
				40	12	9			N	CONN. AUDIO CONTROL J12			
				47	1	9			N	CONN. TO AUDIO CONTROL J12			
				47	3	12			N	CONN. NRS CONTROL J3			
	5			51	9	17			N	CONN. COMMAND PANEL	J09		
	9			70	2	9			N	CONN. AUDIO CONTROL	J02		
	5			92	1	12			N	CONN. VU PANEL, CTL			
+50.0V	2			7	1	1			L	CHARGE CAPACITOR CHC1			
	2			8	1	3			J	RECTIFIER DZ2			
	2			11	9	1			Y	CONN. SP. MOTOR SUPPLY,	P1, P2		
	2			20	5	1			Y	CONN. CAPSTAN MOTOR SUPPLY	P1, P2		
+60.0V	5			6	4	2			N	CONN. TAPE DECK ELECTRONICS	J04		
	5			10	1	8			C	CONNECTOR POWER SUPPLY	J01		

* STUDER REVOX AG * S I G N A L W I R E L I S T * 91/07/18 * 16:53 * P A G E 42 *

* 1.807.010.00 * STUDER A 807 TAPE RECORDER 2 CH * * 91/07/10 - 00 *

SIGNAL NAME	COLOR	MI	ASY	GRP	ELM	PNT	S	LV	TYPE	DESCRIPTION OF ELEMENT		REMARK	ELEMENT NR.
-15.0V	6			1	8	16			B	CONN. EXT. VU PANEL, CTL			
	6			10	2	11			N	CONN. CAPSTAN CTL.	J02		
	6			10	6	19			N	CONN. SPOOLING MOTOR CTL.	J06		
	6			10	8	11			N	CONN. EXT. VU-PANEL	J08		
	6			10	9	15			N	CONN. COMMAND PANEL	J09		
	6			10	10	15			N	CONN. AUDIO CTL.	J10		
	6			11	2	3			N	CONN. TAPE TENS. SENSOR	J02		
	6			11	3	10			N	CONN. TAPE DECK CTL.	J03		
	6			13	1	4			N	CONN. SP. MOTOR CTL, J02			
	6			20	1	10			N	CONN. TAPE DECK CTL.	J01		
	6			30	3	20			D	CONN. TAPE DECK CTL. J10			
	6			40	1	11			N	CONN. TAPE DECK ELECTRONICS			
				40	12	19			N	CONN. AUDIO CONTROL J12			
				40	23	2			N	CONN. AUDIO ELECTRONICS CH1			
				40	31	8			N	CONN. INSERT, INPUT CIRCUIT			
				40	32	1			N	CONN. INSERT, INPUT CIRCUIT			
				40	33	1			N	CONN. PREAMPLIFIER, SECOND REPRO			
				40	36	6			N	CONN. INSERT, OUTPUT CIRCUIT			
				40	43	2			N	CONN. AUDIO ELECTRONICS CH2			
				41	13	2			N	CONN. AUDIO CTL, J23			
				42	13	2			N	CONN. AUDIO CTL, J43			
				43	33	1			N	CONN. AUDIO CTL, J33			
				44	32	1			N	CONN. AUDIO CTL, J32			
				45	36	6			N	CONN. AUDIO CTL, J36			
				47	1	19			N	CONN. TO AUDIO CONTROL J12			
				47	3	2			N	CONN. NRS CONTROL J3			
				48	31	8			N	CONN. INSERT, INPUT CIRCUIT			
				48	32	1			N	CONN. INSERT, INPUT CIRCUIT			
				49	36	6			N	CONN. INSERT, OUTPUT CIRCUIT			
	6			51	9	15			N	CONN. COMMAND PANEL	J09		
	9			70	2	19			N	CONN. AUDIO CONTROL	J02		
				70	10	23				CONN. TIME CODE WRITE/READ UNIT	J10		
				70	21	23				TIME CODE WRITE/READ UNIT			
	6			92	1	10			N	CONN. VU PANEL, CTL			
-20.0V	6			6	4	15			N	CONN. TAPE DECK ELECTRONICS	J04		
	6			10	1	4			C	CONNECTOR POWER SUPPLY	J01		
A-AUXSC1				92	2	2			N	CONN. VU PANEL, AUDIO			
A-AUXSC2				92	2	8			N	CONN. VU PANEL, AUDIO			
A-AUX1				92	2	1			N	CONN. VU PANEL, AUDIO			
A-AUX2				92	2	7			N	CONN. VU PANEL, AUDIO			
A-CTALK1				40	23	10			N	CONN. AUDIO ELECTRONICS CH1			
				41	13	10			N	CONN. AUDIO CTL, J23			
A-CTALK2				40	43	10			N	CONN. AUDIO ELECTRONICS CH2			
				42	13	10			N	CONN. AUDIO CTL, J43			
A-DRVA-1	6			1	11	18			A	AUDIO INSERT CONNECTOR			
	6			49	1	5			N	CONN. REPRODUCE INSERT			

* STUDER REVOX AG * S I G N A L W I R E L I S T * 91/07/18 * 16:53 * P A G E 44 *
* 1.807.010.00 * STUDER A 807 TAPE RECORDER 2 CH * * 91/07/10 - 00 *

SIGNAL NAME	COLOR	MI	ASY	GRP	ELM	PNT	S	LV	TYPE	DESCRIPTION OF ELEMENT	REMARK	ELEMENT NR.
<<-- CONT.OF				40	44	4			N	CONN. AUDIO ELECTRONICS CH2		
A-D3				41	12	11			N	CONN. AUDIO CTL, J22		
				41	14	4			N	CONN. AUDIO CTL, J24		
				42	12	11			N	CONN. AUDIO CTL, J42		
				42	14	4			N	CONN. AUDIO CTL, J44		
A-D4				40	22	15			N	CONN. AUDIO ELECTRONICS CH1		
				40	24	7			N	CONN. AUDIO ELECTRONICS CH1		
				40	42	15			N	CONN. AUDIO ELECTRONICS CH2		
				40	44	7			N	CONN. AUDIO ELECTRONICS CH2		
				41	12	15			N	CONN. AUDIO CTL, J22		
				41	14	7			N	CONN. AUDIO CTL, J24		
				42	12	15			N	CONN. AUDIO CTL, J42		
				42	14	7			N	CONN. AUDIO CTL, J44		
A-D5				40	22	16			N	CONN. AUDIO ELECTRONICS CH1		
				40	24	8			N	CONN. AUDIO ELECTRONICS CH1		
				40	42	16			N	CONN. AUDIO ELECTRONICS CH2		
				40	44	8			N	CONN. AUDIO ELECTRONICS CH2		
				41	12	16			N	CONN. AUDIO CTL, J22		
				41	14	8			N	CONN. AUDIO CTL, J24		
				42	12	16			N	CONN. AUDIO CTL, J42		
				42	14	8			N	CONN. AUDIO CTL, J44		
A-D6				40	22	17			N	CONN. AUDIO ELECTRONICS CH1		
				40	24	9			N	CONN. AUDIO ELECTRONICS CH1		
				40	42	17			N	CONN. AUDIO ELECTRONICS CH2		
				40	44	9			N	CONN. AUDIO ELECTRONICS CH2		
				41	12	17			N	CONN. AUDIO CTL, J22		
				41	14	9			N	CONN. AUDIO CTL, J24		
				42	12	17			N	CONN. AUDIO CTL, J42		
				42	14	9			N	CONN. AUDIO CTL, J44		
A-D7				40	22	18			N	CONN. AUDIO ELECTRONICS CH1		
				40	24	10			N	CONN. AUDIO ELECTRONICS CH1		
				40	42	18			N	CONN. AUDIO ELECTRONICS CH2		
				40	44	10			N	CONN. AUDIO ELECTRONICS CH2		
				41	12	18			N	CONN. AUDIO CTL, J22		
				41	14	10			N	CONN. AUDIO CTL, J24		
				42	12	18			N	CONN. AUDIO CTL, J42		
				42	14	10			N	CONN. AUDIO CTL, J44		
A-HFIN				40	22	20			N	CONN. AUDIO ELECTRONICS CH1		
				40	42	20			N	CONN. AUDIO ELECTRONICS CH2		
A-HFIN1				41	12	20			N	CONN. AUDIO CTL, J22		
A-HFIN2				42	12	20			N	CONN. AUDIO CTL, J42		
A-LINA1	9			1	17	2				CONN. LINE INPUT, CH1		
	9			41	2	1			N	CONN. MIC AND LINE INPUTS, CH1		
A-LINA2	9			1	18	2				CONN. LINE INPUT, CH2		
	9			42	2	1			N	CONN. MIC AND LINE INPUTS, CH2		

* STUDER REVOX AG * S I G N A L W I R E L I S T * 91/07/18 * 16:53 * P A G E 43 *
* 1.807.010.00 * STUDER A 807 TAPE RECORDER 2 CH * * 91/07/10 - 00 *

SIGNAL NAME	COLOR	MI	ASY	GRP	ELM	PNT	S	LV	TYPE	DESCRIPTION OF ELEMENT	REMARK	ELEMENT NR.
A-DRVA-2	6			1	11	24			A	AUDIO INSERT CONNECTOR		
	6			49	1	12			N	CONN. REPRODUCE INSERT		
A-DRVB-1	0			1	11	19			A	AUDIO INSERT CONNECTOR		
	0			49	1	6			N	CONN. REPRODUCE INSERT		
A-DRVB-2	0			1	11	25			A	AUDIO INSERT CONNECTOR		
	0			49	1	11			N	CONN. REPRODUCE INSERT		
A-DRVIN1				40	24	12			N	CONN. AUDIO ELECTRONICS CH1		
				40	36	7			N	CONN. INSERT, OUTPUT CIRCUIT		
				41	14	12			N	CONN. AUDIO CTL, J24		
				45	36	7			N	CONN. AUDIO CTL, J36		
				49	36	7			N	CONN. INSERT, OUTPUT CIRCUIT		
A-DRVIN2				40	36	3			N	CONN. INSERT, OUTPUT CIRCUIT		
				40	44	12			N	CONN. AUDIO ELECTRONICS CH2		
				42	14	12			N	CONN. AUDIO CTL, J44		
				45	36	3			N	CONN. AUDIO CTL, J36		
				49	36	3			N	CONN. INSERT, OUTPUT CIRCUIT		
A-DRVS-1	0			1	11	17			A	AUDIO INSERT CONNECTOR		
A-DRVS-2	0			1	11	23			A	AUDIO INSERT CONNECTOR		
A-D0				40	22	8			N	CONN. AUDIO ELECTRONICS CH1		
				40	24	1			N	CONN. AUDIO ELECTRONICS CH1		
				40	42	8			N	CONN. AUDIO ELECTRONICS CH2		
				40	44	1			N	CONN. AUDIO ELECTRONICS CH2		
				41	12	8			N	CONN. AUDIO CTL, J22		
				41	14	1			N	CONN. AUDIO CTL, J24		
				42	12	8			N	CONN. AUDIO CTL, J42		
				42	14	1			N	CONN. AUDIO CTL, J44		
A-D1				40	22	9			N	CONN. AUDIO ELECTRONICS CH1		
				40	24	2			N	CONN. AUDIO ELECTRONICS CH1		
				40	42	9			N	CONN. AUDIO ELECTRONICS CH2		
				40	44	2			N	CONN. AUDIO ELECTRONICS CH2		
				41	12	9			N	CONN. AUDIO CTL, J22		
				41	14	2			N	CONN. AUDIO CTL, J24		
				42	12	9			N	CONN. AUDIO CTL, J42		
				42	14	2			N	CONN. AUDIO CTL, J44		
A-D2				40	22	10			N	CONN. AUDIO ELECTRONICS CH1		
				40	24	3			N	CONN. AUDIO ELECTRONICS CH1		
				40	42	10			N	CONN. AUDIO ELECTRONICS CH2		
				40	44	3			N	CONN. AUDIO ELECTRONICS CH2		
				41	12	10			N	CONN. AUDIO CTL, J22		
				41	14	3			N	CONN. AUDIO CTL, J24		
				42	12	10			N	CONN. AUDIO CTL, J42		
				42	14	3			N	CONN. AUDIO CTL, J44		
A-D3				40	22	11			N	CONN. AUDIO ELECTRONICS CH1		
				40	24	4			N	CONN. AUDIO ELECTRONICS CH1		
				40	42	11			N	CONN. AUDIO ELECTRONICS CH2		

* STUDER REVOX AG * S I G N A L W I R E L I S T * 91/07/18 * 16:53 * P A G E 45 *
* 1.807.010.00 * STUDER A 807 TAPE RECORDER 2 CH * * 91/07/10 - 00 *

SIGNAL NAME	COLOR	MI	ASY	GRP	ELM	PNT	S	LV	TYPE	DESCRIPTION OF ELEMENT	REMARK	ELEMENT NR.
A-LINB1	6			1	17	3				CONN. LINE INPUT, CH1		
	6			41	2	2			N	CONN. MIC AND LINE INPUTS, CH1		
A-LINB2	6			1	18	3				CONN. LINE INPUT, CH2		
	6			42	2	2			N	CONN. MIC AND LINE INPUTS, CH2		
A-LINS1	S			1	17	1				CONN. LINE INPUT, CH1		
	S			41	2	3			N	CONN. MIC AND LINE INPUTS, CH1		
A-LINS2	S			1	18	1				CONN. LINE INPUT, CH2		
	S			42	2	3			N	CONN. MIC AND LINE INPUTS, CH2		
A-LOUTA1	2			1	15	2				CONN. LINE OUTPUT, CH1		
	2			41	7	2			N	CONN. LINE OUTPUT CONNECTOR, CH1		
A-LOUTA2	2			1	16	2				CONN. LINE OUTPUT, CH2		
	2			42	7	2			N	CONN. LINE OUTPUT CONNECTOR, CH2		
A-LOUTB1	3			1	15	3				CONN. LINE OUTPUT, CH1		
	3			41	7	1			N	CONN. LINE OUTPUT CONNECTOR, CH1		
A-LOUTB2	3			1	16	3				CONN. LINE OUTPUT, CH2		
	3			42	7	1			N	CONN. LINE OUTPUT CONNECTOR, CH2		
A-LOUTS1	S			1	15	1				CONN. LINE OUTPUT, CH1		
A-LOUTS2	S			1	16	1				CONN. LINE OUTPUT, CH2		
A-LSA	6			1	9	7			A	CONN. EXT. VU PANEL, AUDIO		
	6			37	1	2			L	LOUDSPEAKER		
	6			40	2	16			N	CONN. MONITOR		
	6			92	2	19			N	CONN. VU PANEL, AUDIO		
A-LSAMP1	8			36	1	5			L	CONN. HEAD PHONES		
	8			40	2	13			N	CONN. MONITOR		
A-LSAMP2	3			36	1	2			L	CONN. HEAD PHONES		
	3			40	2	12			N	CONN. MONITOR		
A-LSB	7			1	9	20			A	CONN. EXT. VU PANEL, AUDIO		
	7			37	1	1			L	LOUDSPEAKER		
	7			40	2	17			N	CONN. MONITOR		
	7			92	2	20			N	CONN. VU PANEL, AUDIO		
A-LVINA1	9			1	9	16			A	CONN. EXT. VU PANEL, AUDIO		
	9			35	2	3			L	LINE LEVEL POTM. CH1		
	9			41	3	1			N	CONN. LINE LEVEL POT, CH1		
				92	4	7			N	CONN. LEVEL CONTROL, AUDIO		
	9			92	5	7			N	CONN. LEVEL CONTROL, AUDIO		
A-LVINA2	9			1	9	23			A	CONN. EXT. VU PANEL, AUDIO		
	9			35	4	3			L	LINE LEVEL POTM. CH2		
	9			42	3	1			N	CONN. LINE LEVEL POT, CH2		
				92	4	1			N	CONN. LEVEL CONTROL, AUDIO		
	9			92	5	1			N	CONN. LEVEL CONTROL, AUDIO		

* STUDER REVOX AG * S I G N A L W I R E L I S T * 91/07/18 * 16:53 * P A G E 46 *
* 1.807.010.00 * STUDER A 807 TAPE RECORDER 2 CH * * 91/07/10 - 00 *

SIGNAL NAME	COLOR	MI	ASY	GRP	ELM	PNT	S	LV	TYPE	DESCRIPTION OF ELEMENT	REMARK	ELEMENT NR.
A-LVINB1	6			1	9	3			A	CONN. EXT. VU PANEL, AUDIO		
	2			35	2	2			L	LINE LEVEL POTM. CH1		
	2			41	3	2			N	CONN. LINE LEVEL POT, CH1		
	6			92	5	8			N	CONN. LEVEL CONTROL, AUDIO		
A-LVINB2	6			1	9	10			A	CONN. EXT. VU PANEL, AUDIO		
	4			35	4	2			L	LINE LEVEL POTM. CH2		
	4			42	3	2			N	CONN. LINE LEVEL POT, CH2		
	6			92	5	2			N	CONN. LEVEL CONTROL, AUDIO		
A-LVINC1	S			1	9	15			A	CONN. EXT. VU PANEL, AUDIO		
	0			35	2	1			L	LINE LEVEL POTM. CH1		
	0			41	3	4			N	CONN. LINE LEVEL POT, CH1		
				92	4	9			N	CONN. LEVEL CONTROL, AUDIO		
	S			92	5	9			N	CONN. LEVEL CONTROL, AUDIO		
A-LVINC2	S			1	9	22			A	CONN. EXT. VU PANEL, AUDIO		
	0			35	4	1			L	LINE LEVEL POTM. CH2		
	0			42	3	4			N	CONN. LINE LEVEL POT, CH2		
				92	4	3			N	CONN. LEVEL CONTROL, AUDIO		
	S			92	5	3			N	CONN. LEVEL CONTROL, AUDIO		
A-LVIND1				92	4	8			N	CONN. LEVEL CONTROL, AUDIO		
A-LVIND2				92	4	2			N	CONN. LEVEL CONTROL, AUDIO		
A-LVMIA1	9			35	1	3			L	MIC LEVEL POTM. CH1		
	9			41	1	1			N	CONN. MIC LEVEL POT, CH1		
A-LVMIA2	9			35	3	3			L	MIC LEVEL POTM. CH2		
	9			42	1	1			N	CONN. MIC LEVEL POT, CH2		
A-LVMIB1	6			35	1	2			L	MIC LEVEL POTM. CH1		
	6			41	1	3			N	CONN. MIC LEVEL POT, CH1		
A-LVMIB2	6			35	3	2			L	MIC LEVEL POTM. CH2		
	6			42	1	3			N	CONN. MIC LEVEL POT, CH2		
A-LVMIC1	0			35	1	1			L	MIC LEVEL POTM. CH1		
	S			41	1	4			N	CONN. MIC LEVEL POT, CH1		
A-LVMIC2	0			35	3	1			L	MIC LEVEL POTM. CH2		
	S			42	1	4			N	CONN. MIC LEVEL POT, CH2		
A-LVMOA1				92	3	4			N	CONN. LEVEL CONTROL, AUDIO		
A-LVMOA2				92	3	7			N	CONN. LEVEL CONTROL, AUDIO		
A-LVMOB1				92	3	3			N	CONN. LEVEL CONTROL, AUDIO		
A-LVMOB2				92	3	6			N	CONN. LEVEL CONTROL, AUDIO		
A-LVMOC1				92	3	1			N	CONN. LEVEL CONTROL, AUDIO		
A-LVMOC2				92	3	5			N	CONN. LEVEL CONTROL, AUDIO		

```
*****************************************************************************************************************
*   STUDER REVOX AG   *   S I G N A L   W I R E   L I S T                  * 91/07/18 * 16:53 *  P A G E  47  *
*****************************************************************************************************************
*            1.807.010.00  * STUDER  A 807 TAPE RECORDER 2 CH *                  * 91/07/10 - 00                 *
*****************************************************************************************************************
```

SIGNAL NAME	COLOR	MI	ASY	GRP	ELM	PNT	S	LV	TYPE	DESCRIPTION OF ELEMENT	REMARK	ELEMENT NR.
A-LVMON1	9			37	2	6			L	MONITOR VOLUME POTM.		
	9			37	2	12			L	MONITOR VOLUME POTM.		
A-LVMON2	9			37	2	3			L	MONITOR VOLUME POTM.		
	9			37	2	7			L	MONITOR VOLUME POTM.		
A-LVOUA1	9			1	9	1			A	CONN. EXT. VU PANEL, AUDIO		
	9			35	5	3			L	OUTPUT LEVEL POTM. CH1		
	9			41	6	1			N	CONN. OUTPUT LEVEL POT, CH1		
				92	4	10			N	CONN. LEVEL CONTROL, AUDIO		
	9			92	5	10			N	CONN. LEVEL CONTROL, AUDIO		
A-LVOUA2	9			1	9	8			A	CONN. EXT. VU PANEL, AUDIO		
	9			35	6	3			L	OUTPUT LEVEL POTM. CH2		
	9			42	6	1			N	CONN. OUTPUT LEVEL POT, CH2		
				92	4	4			N	CONN. LEVEL CONTROL, AUDIO		
	9			92	5	4			N	CONN. LEVEL CONTROL, AUDIO		
A-LVOUB1	6			1	9	14			A	CONN. EXT. VU PANEL, AUDIO		
	5			35	5	2			L	OUTPUT LEVEL POTM. CH1		
	5			41	6	3			N	CONN. OUTPUT LEVEL POT, CH1		
	6			92	5	12			N	CONN. LEVEL CONTROL, AUDIO		
A-LVOUB2	6			1	9	21			A	CONN. EXT. VU PANEL, AUDIO		
	6			35	6	2			L	OUTPUT LEVEL POTM. CH2		
	6			42	6	3			N	CONN. OUTPUT LEVEL POT, CH2		
	6			92	5	5			N	CONN. LEVEL CONTROL, AUDIO		
A-LVOUC1	S			1	9	2			A	CONN. EXT. VU PANEL, AUDIO		
	0			35	5	1			L	OUTPUT LEVEL POTM. CH1		
	0			41	6	4			N	CONN. OUTPUT LEVEL POT, CH1		
				92	4	13			N	CONN. LEVEL CONTROL, AUDIO		
	S			92	5	13			N	CONN. LEVEL CONTROL, AUDIO		
A-LVOUC2	S			1	9	9			A	CONN. EXT. VU PANEL, AUDIO		
	0			35	6	1			L	OUTPUT LEVEL POTM. CH2		
	0			42	6	4			N	CONN. OUTPUT LEVEL POT, CH2		
				92	4	6			N	CONN. LEVEL CONTROL, AUDIO		
	S			92	5	6			N	CONN. LEVEL CONTROL, AUDIO		
A-LVOUD1				92	4	11			N	CONN. LEVEL CONTROL, AUDIO		
A-LVOUD2				92	4	5			N	CONN. LEVEL CONTROL, AUDIO		
A-MICAS1				41	2	10			N	CONN. MIC AND LINE INPUTS, CH1		
A-MICAS2				42	2	10			N	CONN. MIC AND LINE INPUTS, CH2		
A-MICSA1	9			1	19	2				CONN. MIC INPUT, CH1		
	9			41	2	7			N	CONN. MIC AND LINE INPUTS, CH1		
A-MICSA2	9			1	20	2				CONN. MIC INPUT, CH2		
	9			42	2	7			N	CONN. MIC AND LINE INPUTS, CH2		
A-MICSB1	6			1	19	3				CONN. MIC INPUT, CH1		
	6			41	2	6			N	CONN. MIC AND LINE INPUTS, CH1		

* STUDER REVOX AG * S I G N A L W I R E L I S T * 91/07/18 * 16:53 * P A G E 48 *

* 1.807.010.00 * STUDER A 807 TAPE RECORDER 2 CH * * 91/07/10 - 00 *

SIGNAL NAME	COLOR	MI	ASY	GRP	ELM	PNT	S	LV	TYPE	DESCRIPTION OF ELEMENT	REMARK	ELEMENT NR.
A-MICSB2	6			1	20	3				CONN. MIC INPUT, CH2		
	6			42	2	6			N	CONN. MIC AND LINE INPUTS, CH2		
A-MICSS1	S			1	19	1				CONN. MIC INPUT, CH1		
	S			41	2	5			N	CONN. MIC AND LINE INPUTS, CH1		
A-MICSS2	S			1	20	1				CONN. MIC INPUT, CH2		
	S			42	2	5			N	CONN. MIC AND LINE INPUTS, CH2		
A-MICSW1				41	2	9			N	CONN. MIC AND LINE INPUTS, CH1		
A-MICSW2				42	2	9			N	CONN. MIC AND LINE INPUTS, CH2		
A-MONIT1	1			1	9	5			A	CONN. EXT. VU PANEL, AUDIO		
	1			37	2	11			L	MONITOR VOLUME POTM.		
	1			40	2	20			N	CONN. MONITOR		
				40	24	20			N	CONN. AUDIO ELECTRONICS CH1		
				41	14	20			N	CONN. AUDIO CTL, J24		
	9			92	2	5			N	CONN. VU PANEL, AUDIO		
A-MONIT2	2			1	9	12			A	CONN. EXT. VU PANEL, AUDIO		
	2			37	2	9			L	MONITOR VOLUME POTM.		
	2			40	2	1			N	CONN. MONITOR		
				40	44	20			N	CONN. AUDIO ELECTRONICS CH2		
				42	14	20			N	CONN. AUDIO CTL, J44		
	9			92	2	9			N	CONN. VU PANEL, AUDIO		
A-MONSC1	S			92	2	6			N	CONN. VU PANEL, AUDIO		
A-MONSC2	S			92	2	10			N	CONN. VU PANEL, AUDIO		
A-PHIN1	8			1	9	6			A	CONN. EXT. VU PANEL, AUDIO		
	8			37	2	5			L	MONITOR VOLUME POTM.		
	8			40	2	8			N	CONN. MONITOR		
	9			92	2	15			N	CONN. VU PANEL, AUDIO		
A-PHIN2	4			1	9	19			A	CONN. EXT. VU PANEL, AUDIO		
	4			37	2	2			L	MONITOR VOLUME POTM.		
	4			40	2	4			N	CONN. MONITOR		
	9			92	2	13			N	CONN. VU PANEL, AUDIO		
A-PHISC1	S			92	2	16			N	CONN. VU PANEL, AUDIO		
A-PHISC2	S			92	2	14			N	CONN. VU PANEL, AUDIO		
A-PHOUT1	1			36	1	4			L	CONN. HEAD PHONES		
	1			40	2	11			N	CONN. MONITOR		
A-PHOUT2	2			36	1	3			L	CONN. HEAD PHONES		
	2			40	2	7			N	CONN. MONITOR		
A-PHSW1A				40	2	9			N	CONN. MONITOR		
A-PHSW1B				40	2	10			N	CONN. MONITOR		
A-PHSW2A				40	2	5			N	CONN. MONITOR		

* STUDER REVOX AG * S I G N A L W I R E L I S T * 91/07/18 * 16:53 * P A G E 49 *

* 1.807.010.00 * STUDER A 807 TAPE RECORDER 2 CH * * 91/07/10 - 00 *

SIGNAL NAME	COLOR	MI	ASY	GRP	ELM	PNT	S	LV	TYPE	DESCRIPTION OF ELEMENT	REMARK	ELEMENT NR.
A-PHSW2B				40	2	6			N	CONN. MONITOR		
A-PHTM1	0			1	21	1			L	PHANTOM POWERING SWITCH		
	0			40	3	4			N	CONN. PHANTOM POWERING SWITCH		
A-PHTM2	8			1	21	2			L	PHANTOM POWERING SWITCH		
	8			40	3	3			N	CONN. PHANTOM POWERING SWITCH		
A-PHTM3	9			1	21	3			L	PHANTOM POWERING SWITCH		
	9			40	3	1			N	CONN. PHANTOM POWERING SWITCH		
A-PREA-1	6			1	11	2			A	AUDIO INSERT CONNECTOR		
	6			48	1	15			N	CONN. RECORD INSERT		
A-PREA-2	6			1	11	8			A	AUDIO INSERT CONNECTOR		
	6			48	1	1			N	CONN. RECORD INSERT		
A-PREB-1	0			1	11	3			A	AUDIO INSERT CONNECTOR		
	0			48	1	13			N	CONN. RECORD INSERT		
A-PREB-2	0			1	11	9			A	AUDIO INSERT CONNECTOR		
	0			48	1	3			N	CONN. RECORD INSERT		
A-PREOU1	5			1	9	18			A	CONN. EXT. VU PANEL, AUDIO		
	5			37	2	10			L	MONITOR VOLUME POTM.		
	5			40	2	19			N	CONN. MONITOR		
				40	21	4			N	CONN. AUDIO ELECTRONICS CH1		
				40	24	13			N	CONN. AUDIO ELECTRONICS CH1		
				40	31	1			N	CONN. INSERT, INPUT CIRCUIT		
				41	11	4			N	CONN. AUDIO CTL, J21		
				41	14	13			N	CONN. AUDIO CTL, J24		
				44	31	1			N	CONN. AUDIO CTL, J31		
				48	31	1			N	CONN. INSERT, INPUT CIRCUIT		
	9			92	2	3			N	CONN. VU PANEL, AUDIO		
A-PREOU2	3			1	9	25			A	CONN. EXT. VU PANEL, AUDIO		
	3			37	2	8			L	MONITOR VOLUME POTM.		
	3			40	2	3			N	CONN. MONITOR		
				40	31	7			N	CONN. INSERT, INPUT CIRCUIT		
				40	41	4			N	CONN. AUDIO ELECTRONICS CH2		
				40	44	13			N	CONN. AUDIO ELECTRONICS CH2		
				42	11	4			N	CONN. AUDIO CTL, J41		
				42	14	13			N	CONN. AUDIO CTL, J44		
				44	31	7			N	CONN. AUDIO CTL, J31		
				48	31	7			N	CONN. INSERT, INPUT CIRCUIT		
	9			92	2	11			N	CONN. VU PANEL, AUDIO		
A-PRES-1	0			1	11	1			A	AUDIO INSERT CONNECTOR		
A-PRES-2	0			1	11	7			A	AUDIO INSERT CONNECTOR		
A-PROSC1	S			92	2	4			N	CONN. VU PANEL, AUDIO		
A-PROSC2	S			92	2	12			N	CONN. VU PANEL, AUDIO		

```
*****************************************************************************************************************
*   STUDER REVOX AG   *    S I G N A L    W I R E    L I S T                  * 91/07/18 * 16:53 *   P A G E  50   *
*****************************************************************************************************************
*            1.807.010.00  * STUDER  A 807 TAPE RECORDER 2 CH *                      * 91/07/10 - 00                      *
*****************************************************************************************************************
```

SIGNAL NAME	COLOR	MI	ASY	GRP	ELM	PNT	S	LV	TYPE	DESCRIPTION OF ELEMENT	REMARK	ELEMENT NR.
A-RECA-1	6			1	11	5			A	AUDIO INSERT CONNECTOR		
	6			48	1	12			N	CONN. RECORD INSERT		
A-RECA-2	6			1	11	11			A	AUDIO INSERT CONNECTOR		
	6			48	1	5			N	CONN. RECORD INSERT		
A-RECB-1	0			1	11	6			A	AUDIO INSERT CONNECTOR		
	0			48	1	11			N	CONN. RECORD INSERT		
A-RECB-2	0			1	11	12			A	AUDIO INSERT CONNECTOR		
	0			48	1	6			N	CONN. RECORD INSERT		
A-RECIN1				40	22	1			N	CONN. AUDIO ELECTRONICS CH1		
				40	31	4			N	CONN. INSERT, INPUT CIRCUIT		
				41	12	1			N	CONN. AUDIO CTL, J22		
				44	31	4			N	CONN. AUDIO CTL, J31		
				48	31	4			N	CONN. INSERT, INPUT CIRCUIT		
A-RECIN2				40	31	9			N	CONN. INSERT, INPUT CIRCUIT		
				40	42	1			N	CONN. AUDIO ELECTRONICS CH2		
				42	12	1			N	CONN. AUDIO CTL, J42		
				44	31	9			N	CONN. AUDIO CTL, J31		
				48	31	9			N	CONN. INSERT, INPUT CIRCUIT		
A-RECS-1	0			1	11	4			A	AUDIO INSERT CONNECTOR		
A-RECS-2	0			1	11	10			A	AUDIO INSERT CONNECTOR		
A-SECRP1				40	23	4			N	CONN. AUDIO ELECTRONICS CH1		
				40	34	7			N	CONN. PREAMLIFIER, SECOND REPRO		
				41	13	4			N	CONN. AUDIO CTL, J23		
				43	34	7			N	CONN. AUDIO CTL, J34		
A-SECRP2				40	34	9			N	CONN. PREAMLIFIER, SECOND REPRO		
				40	43	4			N	CONN. AUDIO ELECTRONICS CH2		
				42	13	4			N	CONN. AUDIO CTL, J43		
				43	34	9			N	CONN. AUDIO CTL, J34		
A-TAPA-1	6			1	11	15			A	AUDIO INSERT CONNECTOR		
	6			49	1	1			N	CONN. REPRODUCE INSERT		
A-TAPA-2	6			1	11	21			A	AUDIO INSERT CONNECTOR		
	6			49	1	15			N	CONN. REPRODUCE INSERT		
A-TAPB-1	0			1	11	16			A	AUDIO INSERT CONNECTOR		
	0			49	1	3			N	CONN. REPRODUCE INSERT		
A-TAPB-2	0			1	11	22			A	AUDIO INSERT CONNECTOR		
	0			49	1	13			N	CONN. REPRODUCE INSERT		
A-TAPOU1				40	24	14			N	CONN. AUDIO ELECTRONICS CH1		
				40	36	9			N	CONN. INSERT, OUTPUT CIRCUIT		
				41	14	14			N	CONN. AUDIO CTL, J24		
				45	36	9			N	CONN. AUDIO CTL, J36		
				49	36	9			N	CONN. INSERT, OUTPUT CIRCUIT		

STUDER REVOX AG * S I G N A L W I R E L I S T * 91/07/18 * 16:53 * P A G E 51
1.807.010.00 * STUDER A 807 TAPE RECORDER 2 CH * * 91/07/10 - 00

SIGNAL NAME	COLOR	MI	ASY	GRP	ELM	PNT	S	LV	TYPE	DESCRIPTION OF ELEMENT		REMARK	ELEMENT NR.
A-TAPOU2				40	36	5			N	CONN. INSERT, OUTPUT CIRCUIT			
				40	44	14			N	CONN. AUDIO ELECTRONICS CH2			
				42	14	14			N	CONN. AUDIO CTL, J44			
				45	36	5			N	CONN. AUDIO CTL, J36			
				49	36	5			N	CONN. INSERT, OUTPUT CIRCUIT			
A-TAPS-1	0			1	11	14			A	AUDIO INSERT CONNECTOR			
A-TAPS-2	0			1	11	20			A	AUDIO INSERT CONNECTOR			
A-VUMTR1	1			30	5	1			Y	CONN. VU-INPUT CH1			
	1			41	7	4			N	CONN. LINE OUTPUT CONNECTOR, CH1			
A-VUMTR2	1			30	6	1			Y	CONN. VU-INPUT CH2			
	1			42	7	4			N	CONN. LINE OUTPUT CONNECTOR, CH2			
ACA-17N	2			5	4	12			L	SECONDARY 2	P04		
	2			6	1	3			N	CONN. TRANSFORMER	J01		
ACA-17P	3			5	4	13			L	SECONDARY 2	P04		
	3			6	1	2			N	CONN. TRANSFORMER	J01		
ACA-20	1			5	4	11			L	SECONDARY 2	P04		
	1			6	1	1			N	CONN. TRANSFORMER	J01		
ACA-36	4			5	4	14			L	SECONDARY 2	P04		
	4			6	1	13			N	CONN. TRANSFORMER	J01		
ACA-40	0			5	4	10			L	SECONDARY 2	P04		
	0			6	1	11			N	CONN. TRANSFORMER	J01		
				6	1	12				CONN. TRANSFORMER	J01		
ACB-17N	7			5	3	17			L	SECONDARY 1	P03		
	7			6	1	7			N	CONN. TRANSFORMER	J01		
ACB-17P	6			5	3	16			L	SECONDARY 1	P03		
	6			6	1	8			N	CONN. TRANSFORMER	J01		
ACB-20	8			5	3	18			L	SECONDARY 1	P03		
	8			6	1	9			N	CONN. TRANSFORMER	J01		
ACB-36	5			5	3	15			L	SECONDARY 1	P03		
	5			6	1	10			N	CONN. TRANSFORMER	J01		
ACB-40	9			5	3	19			L	SECONDARY 1	P03		
	9			6	1	4			N	CONN. TRANSFORMER	J01		
				6	1	5				CONN. TRANSFORMER	J01		
ACC-17N	4			5	3	12			L	SECONDARY 1	P03		
	4			5	4	17			L	SECONDARY 2	P04		
ACC-17P	4			5	3	13			L	SECONDARY 1	P03		
	4			5	4	16			L	SECONDARY 2	P04		
ACC-20	4			5	3	11			L	SECONDARY 1	P03		
	4			5	4	18			L	SECONDARY 2	P04		

* STUDER REVOX AG * S I G N A L W I R E L I S T * 91/07/18 * 16:53 * P A G E 52 *
* 1.807.010.00 * STUDER A 807 TAPE RECORDER 2 CH * * 91/07/10 - 00 *

SIGNAL NAME	COLOR	MI	ASY	GRP	ELM	PNT	S	LV	TYPE	DESCRIPTION OF ELEMENT		REMARK	ELEMENT NR.
ACC-36	4			5	3	14			L	SECONDARY 1	P03		
	4			5	4	15			L	SECONDARY 2	P04		
ACC-40	4			5	3	10			L	SECONDARY 1	P03		
	4			5	4	19			L	SECONDARY 2	P04		
AN-TTENS	9			11	2	4			N	CONN. TAPE TENS. SENSOR	J02		
	9			13	1	5			N	CONN. SP. MOTOR CTL, J02			
ARC-CLK	3			1	10	3			B	AUDIO REMOTE CONTROL CONN.			
	3			51	1	3			N	AUDIO REMOTE CONTROL IF.			
ARC-DATA	2			1	10	2			B	AUDIO REMOTE CONTROL CONN.			
	2			51	1	2			N	AUDIO REMOTE CONTROL IF.			
ARC-DPEN	6			1	10	6			B	AUDIO REMOTE CONTROL CONN.			
	6			51	1	1			N	AUDIO REMOTE CONTROL IF.			
ARC-D0	9			1	10	10			B	AUDIO REMOTE CONTROL CONN.			
	9			51	1	12			N	AUDIO REMOTE CONTROL IF.			
ARC-D4	4			1	10	14			B	AUDIO REMOTE CONTROL CONN.			
	4			51	1	10			N	AUDIO REMOTE CONTROL IF.			
ARC-D5	3			1	10	13			B	AUDIO REMOTE CONTROL CONN.			
	3			51	1	13			N	AUDIO REMOTE CONTROL IF.			
ARC-D6	2			1	10	12			B	AUDIO REMOTE CONTROL CONN.			
	2			51	1	14			N	AUDIO REMOTE CONTROL IF.			
ARC-D7	1			1	10	11			B	AUDIO REMOTE CONTROL CONN.			
	1			51	1	9			N	AUDIO REMOTE CONTROL IF.			
ARC-LDEN	5			1	10	5			B	AUDIO REMOTE CONTROL CONN.			
	5			51	1	5			N	AUDIO REMOTE CONTROL IF.			
ARC-MXEN	4			1	10	4			B	AUDIO REMOTE CONTROL CONN.			
	4			51	1	4			N	AUDIO REMOTE CONTROL IF.			
AS-CLK	6			10	10	6			N	CONN. AUDIO CTL.	J10		
	6			40	1	3			N	CONN. TAPE DECK ELECTRONICS			
AS-DATA	7			10	10	7			N	CONN. AUDIO CTL.	J10		
	7			40	1	2			N	CONN. TAPE DECK ELECTRONICS			
AS-FAD	1			10	10	1			N	CONN. AUDIO CTL.	J10		
	1			40	1	12			N	CONN. TAPE DECK ELECTRONICS			
AS-HFCLK	8			10	10	8			N	CONN. AUDIO CTL.	J10		
	8			40	1	16			N	CONN. TAPE DECK ELECTRONICS			
AS-RESET	9			10	10	9			N	CONN. AUDIO CTL.	J10		
	9			40	1	13			N	CONN. TAPE DECK ELECTRONICS			
AS-STR	5			10	10	5			N	CONN. AUDIO CTL.	J10		
	5			40	1	5			N	CONN. TAPE DECK ELECTRONICS			

* STUDER REVOX AG * S I G N A L W I R E L I S T * 91/07/18 * 16:53 * P A G E 53 *
* 1.807.010.00 * STUDER A 807 TAPE RECORDER 2 CH * * 91/07/10 - 00 *

SIGNAL NAME	COLOR	MI	ASY	GRP	ELM	PNT	S	LV	TYPE	DESCRIPTION OF ELEMENT		REMARK	ELEMENT NR.
AS-STRAB	4			10	10	4			N	CONN. AUDIO CTL.	J10		
	4			40	1	1			N	CONN. TAPE DECK ELECTRONICS			
				40	22	14			N	CONN. AUDIO ELECTRONICS CH1			
				40	24	6			N	CONN. AUDIO ELECTRONICS CH1			
				40	42	14			N	CONN. AUDIO ELECTRONICS CH2			
				40	44	6			N	CONN. AUDIO ELECTRONICS CH2			
				41	12	14			N	CONN. AUDIO CTL, J22			
				41	14	6			N	CONN. AUDIO CTL, J24			
				42	12	14			N	CONN. AUDIO CTL, J42			
				42	14	6			N	CONN. AUDIO CTL, J44			
AS-STREC	6			10	10	16			N	CONN. AUDIO CTL.	J10		
	4			40	1	6			N	CONN. TAPE DECK ELECTRONICS			
AS-WREN	3			10	10	3			N	CONN. AUDIO CTL.	J10		
	3			40	1	4			N	CONN. TAPE DECK ELECTRONICS			
B-DBY-01	1			1	5	1			B	NRS CONTROL CONNECTOR			
	1			47	5	10			N	CONN. NRS CONTROL J2			
B-DBY-02	2			1	5	2			B	NRS CONTROL CONNECTOR			
	2			47	5	7			N	CONN. NRS CONTROL J2			
B-DBY-03	3			1	5	3			B	NRS CONTROL CONNECTOR			
	3			47	5	5			N	CONN. NRS CONTROL J2			
B-DBY-04	4			1	5	4			B	NRS CONTROL CONNECTOR			
	4			47	5	3			N	CONN. NRS CONTROL J2			
B-FAST				30	1	1			N	CONN. SPEED INDICATORS			
				31	1	1			N	CONN. COMMAND PANEL J01			
B-MID				30	1	2			N	CONN. SPEED INDICATORS			
				31	1	2			N	CONN. COMMAND PANEL J01			
B-SLOW				30	1	3			N	CONN. SPEED INDICATORS			
				31	1	3			N	CONN. COMMAND PANEL J01			
B-TLC-01	5			1	5	5			B	NRS CONTROL CONNECTOR			
	5			47	5	11			N	CONN. NRS CONTROL J2			
B-TLC-02	6			1	5	6			B	NRS CONTROL CONNECTOR			
	6			47	5	8			N	CONN. NRS CONTROL J2			
B-TLC-03	7			1	5	7			B	NRS CONTROL CONNECTOR			
	7			47	5	6			N	CONN. NRS CONTROL J2			
B-TLC-04	8			1	5	8			B	NRS CONTROL CONNECTOR			
	8			47	5	4			N	CONN. NRS CONTROL J2			
BR-FADRY	7			1	6	8			B	PARALLEL REMOTE CONNECTOR			
	7			10	12	7			N	CONN. PARALLEL REMOTE B	J12		
	7			51	12	7			N	CONN. PARALLEL REMOTE B	J12		

* STUDER REVOX AG * S I G N A L W I R E L I S T * 91/07/18 * 16:53 * P A G E 54 *

* 1.807.010.00 * STUDER A 807 TAPE RECORDER 2 CH * * 91/07/10 - 00 *

SIGNAL NAME	COLOR	MI	ASY	GRP	ELM	PNT	S	LV	TYPE	DESCRIPTION OF ELEMENT		REMARK	ELEMENT NR.
BR-FORW	2			1	6	3			B	PARALLEL REMOTE CONNECTOR			
	2			1	7	3			B	SYNCHRONIZER CONNECTOR			
	2			10	12	2			N	CONN. PARALLEL REMOTE B	J12		
	2			10	14	2			N	CONN. SYNCHRONIZER B	J14		
	2			51	12	2			N	CONN. PARALLEL REMOTE B	J12		
BR-LOCST	8			1	6	7			B	PARALLEL REMOTE CONNECTOR			
	8			10	12	8			N	CONN. PARALLEL REMOTE B	J12		
	8			51	12	8			N	CONN. PARALLEL REMOTE B	J12		
BR-PLAY	1			1	6	15			B	PARALLEL REMOTE CONNECTOR			
	1			1	7	15			B	SYNCHRONIZER CONNECTOR			
	1			10	12	1			N	CONN. PARALLEL REMOTE B	J12		
	1			10	14	1			N	CONN. SYNCHRONIZER B	J14		
	1			51	12	1			N	CONN. PARALLEL REMOTE B	J12		
BR-REC	5			1	6	9			B	PARALLEL REMOTE CONNECTOR			
	5			1	7	9			B	SYNCHRONIZER CONNECTOR			
	5			10	12	5			N	CONN. PARALLEL REMOTE B	J12		
	5			10	14	5			N	CONN. SYNCHRONIZER B	J14		
	5			51	12	5			N	CONN. PARALLEL REMOTE B	J12		
BR-REW	3			1	6	2			B	PARALLEL REMOTE CONNECTOR			
	3			1	7	2			B	SYNCHRONIZER CONNECTOR			
	3			10	12	3			N	CONN. PARALLEL REMOTE B	J12		
	3			10	14	3			N	CONN. SYNCHRONIZER B	J14		
	3			51	12	3			N	CONN. PARALLEL REMOTE B	J12		
BR-STOP	4			1	6	16			B	PARALLEL REMOTE CONNECTOR			
	4			1	7	16			B	SYNCHRONIZER CONNECTOR			
	4			10	12	4			N	CONN. PARALLEL REMOTE B	J12		
	4			10	14	4			N	CONN. SYNCHRONIZER B	J14		
	4			51	12	4			N	CONN. PARALLEL REMOTE B	J12		
BR-VRSPD	6			1	6	4			B	PARALLEL REMOTE CONNECTOR			
	6			1	7	4			B	SYNCHRONIZER CONNECTOR			
	6			10	12	6			N	CONN. PARALLEL REMOTE B	J12		
	6			10	14	6			N	CONN. SYNCHRONIZER B	J14		
	6			51	12	6			N	CONN. PARALLEL REMOTE B	J12		
C-BASS				40	23	3			N	CONN. AUDIO ELECTRONICS CH1			
				40	43	3			N	CONN. AUDIO ELECTRONICS CH2			
				41	13	3			N	CONN. AUDIO CTL, J23			
				42	13	3			N	CONN. AUDIO CTL, J43			
C-BIAS1				40	22	3			N	CONN. AUDIO ELECTRONICS CH1			
				41	12	3			N	CONN. AUDIO CTL, J22			
C-BIAS2				40	42	3			N	CONN. AUDIO ELECTRONICS CH2			
				42	12	3			N	CONN. AUDIO CTL, J42			
C-CALIN1				40	21	5			N	CONN. AUDIO ELECTRONICS CH1			
				41	11	5			N	CONN. AUDIO CTL, J21			
C-CALIN2				40	41	5			N	CONN. AUDIO ELECTRONICS CH2			
				42	11	5			N	CONN. AUDIO CTL, J41			

* STUDER REVOX AG * S I G N A L W I R E L I S T * 91/07/18 * 16:53 * P A G E 55 *

* 1.807.010.00 * STUDER A 807 TAPE RECORDER 2 CH * * 91/07/10 - 00 *

SIGNAL NAME	COLOR	MI	ASY	GRP	ELM	PNT	S	LV	TYPE	DESCRIPTION OF ELEMENT		REMARK	ELEMENT NR.
C-CALOU1				40	24	16			N	CONN. AUDIO ELECTRONICS CH1			
				41	14	16			N	CONN. AUDIO CTL, J24			
C-CALOU2				40	44	16			N	CONN. AUDIO ELECTRONICS CH2			
				42	14	16			N	CONN. AUDIO CTL, J44			
C-CUEAT				40	24	18			N	CONN. AUDIO ELECTRONICS CH1			
				40	44	18			N	CONN. AUDIO ELECTRONICS CH2			
				41	14	18			N	CONN. AUDIO CTL, J24			
				42	14	18			N	CONN. AUDIO CTL, J44			
C-EQA				40	22	4			N	CONN. AUDIO ELECTRONICS CH1			
				40	23	6			N	CONN. AUDIO ELECTRONICS CH1			
				40	42	4			N	CONN. AUDIO ELECTRONICS CH2			
				40	43	6			N	CONN. AUDIO ELECTRONICS CH2			
				41	12	4			N	CONN. AUDIO CTL, J22			
				41	13	6			N	CONN. AUDIO CTL, J23			
				42	12	4			N	CONN. AUDIO CTL, J42			
				42	13	6			N	CONN. AUDIO CTL, J43			
C-EQB				40	22	5			N	CONN. AUDIO ELECTRONICS CH1			
				40	23	5			N	CONN. AUDIO ELECTRONICS CH1			
				40	42	5			N	CONN. AUDIO ELECTRONICS CH2			
				40	43	5			N	CONN. AUDIO ELECTRONICS CH2			
				41	12	5			N	CONN. AUDIO CTL, J22			
				41	13	5			N	CONN. AUDIO CTL, J23			
				42	12	5			N	CONN. AUDIO CTL, J42			
				42	13	5			N	CONN. AUDIO CTL, J43			
C-EQF				40	12	8			N	CONN. AUDIO CONTROL J12			
				40	32	8			N	CONN. INSERT, INPUT CIRCUIT			
				40	35	2			N	CONN. INSERT, OUTPUT CIRCUIT			
				44	32	8			N	CONN. AUDIO CTL, J32			
				45	35	2			N	CONN. AUDIO CTL, J35			
				47	1	8			N	CONN. TO AUDIO CONTROL J12			
				47	3	13			N	CONN. NRS CONTROL J3			
				48	32	8			N	CONN. INSERT, INPUT CIRCUIT			
				49	35	2			N	CONN. INSERT, OUTPUT CIRCUIT			
	8			70	2	8			N	CONN. AUDIO CONTROL	J02		
C-EQM				40	12	6			N	CONN. AUDIO CONTROL J12			
				40	32	7			N	CONN. INSERT, INPUT CIRCUIT			
				40	35	3			N	CONN. INSERT, OUTPUT CIRCUIT			
				44	32	7			N	CONN. AUDIO CTL, J32			
				45	35	3			N	CONN. AUDIO CTL, J35			
				47	1	6			N	CONN. TO AUDIO CONTROL J12			
				47	3	15			N	CONN. NRS CONTROL J3			
				48	32	7			N	CONN. INSERT, INPUT CIRCUIT			
				49	35	3			N	CONN. INSERT, OUTPUT CIRCUIT			
	6			70	2	6			N	CONN. AUDIO CONTROL	J02		
C-EQN				40	32	9			N	CONN. INSERT, INPUT CIRCUIT			
				40	35	1			N	CONN. INSERT, OUTPUT CIRCUIT			
				44	32	9			N	CONN. AUDIO CTL, J32			
				45	35	1			N	CONN. AUDIO CTL, J35			

* STUDER REVOX AG * S I G N A L W I R E L I S T * 91/07/18 * 16:53 * P A G E 56 *
* 1.807.010.00 * STUDER A 807 TAPE RECORDER 2 CH * * 91/07/10 - 00 *

SIGNAL NAME	COLOR	MI	ASY	GRP	ELM	PNT	S	LV	TYPE	DESCRIPTION OF ELEMENT		REMARK	ELEMENT NR.
<<-- CONT.OF				48	32	9			N	CONN. INSERT, INPUT CIRCUIT			
C-EQN				49	35	1			N	CONN. INSERT, OUTPUT CIRCUIT			
C-EQS				40	12	7			N	CONN. AUDIO CONTROL J12			
				40	32	6			N	CONN. INSERT, INPUT CIRCUIT			
				40	35	4			N	CONN. INSERT, OUTPUT CIRCUIT			
				44	32	6			N	CONN. AUDIO CTL, J32			
				45	35	4			N	CONN. AUDIO CTL, J35			
				47	1	7			N	CONN. TO AUDIO CONTROL J12			
				47	3	14			N	CONN. NRS CONTROL J3			
				48	32	6			N	CONN. INSERT, INPUT CIRCUIT			
				49	35	4			N	CONN. INSERT, OUTPUT CIRCUIT			
	7			70	2	7			N	CONN. AUDIO CONTROL	J02		
C-ERASE1				40	22	2			N	CONN. AUDIO ELECTRONICS CH1			
				41	12	2			N	CONN. AUDIO CTL, J22			
C-ERASE2				40	42	2			N	CONN. AUDIO ELECTRONICS CH2			
				42	12	2			N	CONN. AUDIO CTL, J42			
C-INITTC				40	12	4			N	CONN. AUDIO CONTROL J12			
				47	1	4			N	CONN. TO AUDIO CONTROL J12			
				47	3	17			N	CONN. NRS CONTROL J3			
	4			70	2	4			N	CONN. AUDIO CONTROL	J02		
C-INPUT1				40	13	17			N	CONN. AUDIO CONTROL J13			
				40	24	15			N	CONN. AUDIO ELECTRONICS CH1			
				41	14	15			N	CONN. AUDIO CTL, J24			
				47	2	17			N	CONN. TO AUDIO CONTROL J13			
				47	4	4			N	CONN. NRS CONTROL J4			
	7			70	3	17			N	CONN. AUDIO CONTROL	J03		
C-INPUT2				40	13	18			N	CONN. AUDIO CONTROL J13			
				40	44	15			N	CONN. AUDIO ELECTRONICS CH2			
				42	14	15			N	CONN. AUDIO CTL, J44			
				47	2	18			N	CONN. TO AUDIO CONTROL J13			
				47	4	3			N	CONN. NRS CONTROL J4			
	8			70	3	18			N	CONN. AUDIO CONTROL	J03		
C-INPUT3	9			70	3	19			N	CONN. AUDIO CONTROL	J03		
C-INPUT4	0			70	3	20			N	CONN. AUDIO CONTROL	J03		
C-INSERT				40	32	4			N	CONN. INSERT, INPUT CIRCUIT			
				40	35	5			N	CONN. INSERT, OUTPUT CIRCUIT			
				44	32	4			N	CONN. AUDIO CTL, J32			
				45	35	5			N	CONN. AUDIO CTL, J35			
				48	32	4			N	CONN. INSERT, INPUT CIRCUIT			
				49	35	5			N	CONN. INSERT, OUTPUT CIRCUIT			
C-MICAT1				40	21	3			N	CONN. AUDIO ELECTRONICS CH1			
				41	11	3			N	CONN. AUDIO CTL, J21			
C-MICAT2				40	41	3			N	CONN. AUDIO ELECTRONICS CH2			
				42	11	3			N	CONN. AUDIO CTL, J41			

* STUDER REVOX AG * S I G N A L W I R E L I S T * 91/07/18 * 16:53 * P A G E 57 *
* 1.807.010.00 * STUDER A 807 TAPE RECORDER 2 CH * * 91/07/10 - 00 *

SIGNAL NAME	COLOR	MI	ASY	GRP	ELM	PNT	S	LV	TYPE	DESCRIPTION OF ELEMENT		REMARK	ELEMENT NR.
C-MICON1				40	21	7			N	CONN. AUDIO ELECTRONICS CH1			
				41	11	7			N	CONN. AUDIO CTL, J21			
C-MICON2				40	41	7			N	CONN. AUDIO ELECTRONICS CH2			
				42	11	7			N	CONN. AUDIO CTL, J41			
C-MONOA	4			44	2	4			N	CONN. M/S OUTPUT APML.			
	4			45	1	4			L	CONN. M/S INPUT AMPL. J01			
C-MONOB				44	2	3			N	CONN. M/S OUTPUT APML.			
				45	1	3			L	CONN. M/S INPUT AMPL. J01			
C-MOTFLT				11	7	7			N	CONN. SP. MOTOR FILTER, LEFT	J07		
				12	1	7			N	CONN. SP. MOTOR CTL,	P01		
C-NAB				40	21	2			N	CONN. AUDIO ELECTRONICS CH1			
				40	24	11			N	CONN. AUDIO ELECTRONICS CH1			
				40	41	2			N	CONN. AUDIO ELECTRONICS CH2			
				40	44	11			N	CONN. AUDIO ELECTRONICS CH2			
				41	11	2			N	CONN. AUDIO CTL, J21			
				41	14	11			N	CONN. AUDIO CTL, J24			
				42	11	2			N	CONN. AUDIO CTL, J41			
				42	14	11			N	CONN. AUDIO CTL, J44			
C-OUTSW				40	24	19			N	CONN. AUDIO ELECTRONICS CH1			
				40	44	19			N	CONN. AUDIO ELECTRONICS CH2			
				41	14	19			N	CONN. AUDIO CTL, J24			
				42	14	19			N	CONN. AUDIO CTL, J44			
C-REC				40	12	5			N	CONN. AUDIO CONTROL J12			
				47	1	5			N	CONN. TO AUDIO CONTROL J12			
				47	3	16			N	CONN. NRS CONTROL J3			
	5			70	2	5			N	CONN. AUDIO CONTROL	J02		
C-REC1				40	13	1			N	CONN. AUDIO CONTROL J13			
				40	22	19			N	CONN. AUDIO ELECTRONICS CH1			
				41	12	19			N	CONN. AUDIO CTL, J22			
				47	2	1			N	CONN. TO AUDIO CONTROL J13			
				47	4	20			N	CONN. NRS CONTROL J4			
	1			70	3	1			N	CONN. AUDIO CONTROL	J03		
C-REC2				40	13	2			N	CONN. AUDIO CONTROL J13			
				40	42	19			N	CONN. AUDIO ELECTRONICS CH2			
				42	12	19			N	CONN. AUDIO CTL, J42			
				47	2	2			N	CONN. TO AUDIO CONTROL J13			
				47	4	19			N	CONN. NRS CONTROL J4			
	2			70	3	2			N	CONN. AUDIO CONTROL	J03		
C-REC3	3			70	3	3			N	CONN. AUDIO CONTROL	J03		
C-REC4	4			70	3	4			N	CONN. AUDIO CONTROL	J03		
C-REPRO1				40	13	6			N	CONN. AUDIO CONTROL J13			
				40	23	8			N	CONN. AUDIO ELECTRONICS CH1			
				41	13	8			N	CONN. AUDIO CTL, J23			

* STUDER REVOX AG * S I G N A L W I R E L I S T * 91/07/18 * 16:53 * PAGE 58 *
* 1.807.010.00 * STUDER A 807 TAPE RECORDER 2 CH * * 91/07/10 - 00 *

SIGNAL NAME	COLOR	MI	ASY	GRP	ELM	PNT	S	LV	TYPE	DESCRIPTION OF ELEMENT	REMARK	ELEMENT NR.
<<-- CONT.OF				47	2	6			N	CONN. TO AUDIO CONTROL J13		
C-REPRO1				47	4	15			N	CONN. NRS CONTROL J4		
	6			70	3	6			N	CONN. AUDIO CONTROL J03		
C-REPRO2				40	13	10			N	CONN. AUDIO CONTROL J13		
				40	43	8			N	CONN. AUDIO ELECTRONICS CH2		
				42	13	8			N	CONN. AUDIO CTL, J43		
				47	2	10			N	CONN. TO AUDIO CONTROL J13		
				47	4	11			N	CONN. NRS CONTROL J4		
	0			70	3	10			N	CONN. AUDIO CONTROL J03		
C-REPRO3	8			70	3	8			N	CONN. AUDIO CONTROL J03		
C-REPRO4	2			70	3	12			N	CONN. AUDIO CONTROL J03		
C-SECRP1				40	23	9			N	CONN. AUDIO ELECTRONICS CH1		
				41	13	9			N	CONN. AUDIO CTL, J23		
C-SECRP2				40	43	9			N	CONN. AUDIO ELECTRONICS CH2		
				42	13	9			N	CONN. AUDIO CTL, J43		
C-SYNC1				40	13	5			N	CONN. AUDIO CONTROL J13		
				40	23	7			N	CONN. AUDIO ELECTRONICS CH1		
				41	13	7			N	CONN. AUDIO CTL, J23		
				47	2	5			N	CONN. TO AUDIO CONTROL J13		
				47	4	16			N	CONN. NRS CONTROL J4		
	5			70	3	5			N	CONN. AUDIO CONTROL J03		
C-SYNC2				40	13	9			N	CONN. AUDIO CONTROL J13		
				40	43	7			N	CONN. AUDIO ELECTRONICS CH2		
				42	13	7			N	CONN. AUDIO CTL, J43		
				47	2	9			N	CONN. TO AUDIO CONTROL J13		
				47	4	12			N	CONN. NRS CONTROL J4		
	9			70	3	9			N	CONN. AUDIO CONTROL J03		
C-SYNC3	7			70	3	7			N	CONN. AUDIO CONTROL J03		
C-SYNC4	1			70	3	11			N	CONN. AUDIO CONTROL J03		
C-UNCIN1				40	21	6			N	CONN. AUDIO ELECTRONICS CH1		
				41	11	6			N	CONN. AUDIO CTL, J21		
C-UNCIN2				40	41	6			N	CONN. AUDIO ELECTRONICS CH2		
				42	11	6			N	CONN. AUDIO CTL, J41		
C-UNCOU1				40	24	17			N	CONN. AUDIO ELECTRONICS CH1		
				41	14	17			N	CONN. AUDIO CTL, J24		
C-UNCOU2				40	44	17			N	CONN. AUDIO ELECTRONICS CH2		
				42	14	17			N	CONN. AUDIO CTL, J44		
CA-ADR-R				70	10	27				CONN. TIME CODE WRITE/READ UNIT J10		
				70	21	27				TIME CODE WRITE/READ UNIT		

* STUDER REVOX AG * S I G N A L W I R E L I S T * 91/07/18 * 16:53 * PAGE 59 *
* 1.807.010.00 * STUDER A 807 TAPE RECORDER 2 CH * * 91/07/10 - 00 *

SIGNAL NAME	COLOR	MI	ASY	GRP	ELM	PNT	S	LV	TYPE	DESCRIPTION OF ELEMENT	REMARK	ELEMENT NR.
CA-ADR-S				70	10	28				CONN. TIME CODE WRITE/READ UNIT J10		
				70	21	28				TIME CODE WRITE/READ UNIT		
CA-ADR-T				70	10	29				CONN. TIME CODE WRITE/READ UNIT J10		
				70	21	29				TIME CODE WRITE/READ UNIT		
CA-ADR-U				70	10	30				CONN. TIME CODE WRITE/READ UNIT J10		
				70	21	30				TIME CODE WRITE/READ UNIT		
CA-CHSTC				70	10	39				CONN. TIME CODE WRITE/READ UNIT J10		
				70	21	39				TIME CODE WRITE/READ UNIT		
CA-DATA0				70	10	31				CONN. TIME CODE WRITE/READ UNIT J10		
				70	21	31				TIME CODE WRITE/READ UNIT		
CA-DATA1				70	10	32				CONN. TIME CODE WRITE/READ UNIT J10		
				70	21	32				TIME CODE WRITE/READ UNIT		
CA-DATA2				70	10	33				CONN. TIME CODE WRITE/READ UNIT J10		
				70	21	33				TIME CODE WRITE/READ UNIT		
CA-DATA3				70	10	34				CONN. TIME CODE WRITE/READ UNIT J10		
				70	21	34				TIME CODE WRITE/READ UNIT		
CA-DATA4				70	10	35				CONN. TIME CODE WRITE/READ UNIT J10		
				70	21	35				TIME CODE WRITE/READ UNIT		
CA-DATA5				70	10	36				CONN. TIME CODE WRITE/READ UNIT J10		
				70	21	36				TIME CODE WRITE/READ UNIT		
CA-DATA6				70	10	37				CONN. TIME CODE WRITE/READ UNIT J10		
				70	21	37				TIME CODE WRITE/READ UNIT		
CA-DATA7				70	10	38				CONN. TIME CODE WRITE/READ UNIT J10		
				70	21	38				TIME CODE WRITE/READ UNIT		
CA-SAFE				70	10	26				CONN. TIME CODE WRITE/READ UNIT J10		
				70	21	26				TIME CODE WRITE/READ UNIT		
CAP-GRD				20	3	12				CONN. CAPSTAN TACHO J03		
				21	2	12				CONN. CAPSTAN CTL, J03		
CHC2-N	8			6	2	1			N	CONN. TO CHARGE CAPACITORS J02		
	8			6	3	4			N	CONN. FROM CHARGE CAPACITORS J03		
	8			7	2	2			L	CHARGE CAPACITOR CHC2		
CHC2-P	7			6	2	4			N	CONN. TO CHARGE CAPACITORS J02		
	7			6	3	7			L	CONN. FROM CHARGE CAPACITORS J03		
	7			7	2	1			L	CHARGE CAPACITOR CHC2		
CHC3-N	3			6	2	2			N	CONN. TO CHARGE CAPACITORS J02		
	3			6	3	2			N	CONN. FROM CHARGE CAPACITORS J03		
	3			7	3	2			L	CHARGE CAPACITOR CHC3		

* STUDER REVOX AG * S I G N A L W I R E L I S T * 91/07/18 * 16:53 * P A G E 60 *
* 1.807.010.00 * STUDER A 807 TAPE RECORDER 2 CH * * 91/07/10 - 00 *

SIGNAL NAME	COLOR	MI	ASY	GRP	ELM	PNT	S	LV	TYPE	DESCRIPTION OF ELEMENT		REMARK	ELEMENT NR.
CHC3-P	2			6	2	5			N	CONN. TO CHARGE CAPACITORS	J02		
	2			6	3	6			N	CONN. FROM CHARGE CAPACITORS	J03		
	2			7	3	1			L	CHARGE CAPACITOR CHC3			
CHC4-N	6			6	2	7			N	CONN. TO CHARGE CAPACITORS	J02		
	6			6	3	5			N	CONN. FROM CHARGE CAPACITORS	J03		
	6			7	4	2			L	CHARGE CAPACITOR CHC4			
CHC4-P	4			6	2	3			N	CONN. TO CHARGE CAPACITORS	J02		
	4			6	3	1			N	CONN. FROM CHARGE CAPACITORS	J03		
	4			7	4	1			L	CHARGE CAPACITOR CHC4			
DS-CLK	9			10	9	10			N	CONN. COMMAND PANEL	J09		
				30	2	3			N	CONN. DISPLAY EL.			
	9			30	3	10			D	CONN. TAPE DECK CTL. J10			
				31	2	3			N	CONN. COMMAND PANEL J02			
	9			51	9	10			N	CONN. COMMAND PANEL	J09		
DS-DATA	9			10	9	9			N	CONN. COMMAND PANEL	J09		
				30	2	4			N	CONN. DISPLAY EL.			
	9			30	3	9			D	CONN. TAPE DECK CTL. J10			
				31	2	4			N	CONN. COMMAND PANEL J02			
	9			51	9	9			N	CONN. COMMAND PANEL	J09		
DS-ENDPL	1			10	9	11			N	CONN. COMMAND PANEL	J09		
				30	2	2			N	CONN. DISPLAY EL.			
	1			30	3	11			D	CONN. TAPE DECK CTL. J10			
				31	2	2			N	CONN. COMMAND PANEL J02			
	1			51	9	11			N	CONN. COMMAND PANEL	J09		
DS-ENLDA	2			10	9	20			N	CONN. COMMAND PANEL	J09		
	2			30	3	14			D	CONN. TAPE DECK CTL. J10			
	2			51	9	20			N	CONN. COMMAND PANEL	J09		
DS-ENLDT	2			10	9	12			N	CONN. COMMAND PANEL	J09		
	2			30	3	13			D	CONN. TAPE DECK CTL. J10			
	2			51	9	12			N	CONN. COMMAND PANEL	J09		
DS-ENMTX	9			10	9	19			N	CONN. COMMAND PANEL	J09		
	9			30	3	12			D	CONN. TAPE DECK CTL. J10			
	9			51	9	19			N	CONN. COMMAND PANEL	J09		
DSP-DTCT	3			1	4	3			B	TC REMOTE DISPLAY CONNECTOR			
	3			70	6	2			N	CONN. REMOTE DISPLAY	J06		
ERAHH-TC	9			39	1	18			B	CONN. AUDIO ELECTRONICS			
				70	1	3			N	TO HEAD BLOCK CONNECTOR	J01		
				70	11	4				CONN. TIME CODE WRITE/READ UNIT	J11		
				70	21	4				TIME CODE WRITE/READ UNIT			
ERAHH-01	1			39	1	10			B	CONN. AUDIO ELECTRONICS			
	1			41	4	3			N	CONN. HEAD BLOCK, RECORD			
ERAHH-02	3			39	1	23			B	CONN. AUDIO ELECTRONICS			
	3			42	4	3			N	CONN. HEAD BLOCK, RECORD			

* STUDER REVOX AG * S I G N A L W I R E L I S T * 91/07/18 * 16:53 * P A G E 61 *
* 1.807.010.00 * STUDER A 807 TAPE RECORDER 2 CH * * 91/07/10 - 00 *

SIGNAL NAME	COLOR	MI	ASY	GRP	ELM	PNT	S	LV	TYPE	DESCRIPTION OF ELEMENT		REMARK	ELEMENT NR.
ERAHL-TC	6			39	1	17			B	CONN. AUDIO ELECTRONICS			
				70	1	1			N	TO HEAD BLOCK CONNECTOR	J01		
				70	11	5				CONN. TIME CODE WRITE/READ UNIT	J11		
				70	21	5				TIME CODE WRITE/READ UNIT			
ERAHL-01	9			39	1	9			B	CONN. AUDIO ELECTRONICS			
	9			41	4	5			N	CONN. HEAD BLOCK, RECORD			
ERAHL-02	2			39	1	22			B	CONN. AUDIO ELECTRONICS			
	2			42	4	5			N	CONN. HEAD BLOCK, RECORD			
ERASC-TC	S			39	1	19			B	CONN. AUDIO ELECTRONICS			
				70	1	4			N	TO HEAD BLOCK CONNECTOR	J01		
EX-ENLDA	1			1	8	11			B	CONN. EXT. VU PANEL, CTL			
	5			10	8	16			N	CONN. EXT. VU-PANEL	J08		
	1			92	1	6			N	CONN. VU PANEL, CTL			
EX-ENLDT	9			10	8	9			N	CONN. EXT. VU-PANEL	J08		
EX-ENMTX	5			1	8	5			B	CONN. EXT. VU PANEL, CTL			
	9			10	8	15			N	CONN. EXT. VU-PANEL	J08		
	5			92	1	2			N	CONN. VU PANEL, CTL			
EXT-CLK	3			1	8	10			B	CONN. EXT. VU PANEL, CTL			
	1			10	8	8			N	CONN. EXT. VU-PANEL	J08		
	3			92	1	5			N	CONN. VU PANEL, CTL			
EXT-DATA	9			1	8	12			B	CONN. EXT. VU PANEL, CTL			
	3			10	8	7			N	CONN. EXT. VU-PANEL	J08		
	9			92	1	4			N	CONN. VU PANEL, CTL			
EXT-D4	4			10	8	6			N	CONN. EXT. VU-PANEL	J08		
EXT-D5	5			10	8	5			N	CONN. EXT. VU-PANEL	J08		
EXT-D6	6			1	8	6			B	CONN. EXT. VU PANEL, CTL			
	6			10	8	4			N	CONN. EXT. VU-PANEL	J08		
	6			92	1	3			N	CONN. VU PANEL, CTL			
EXT-D7	7			1	8	7			B	CONN. EXT. VU PANEL, CTL			
	7			10	8	3			N	CONN. EXT. VU-PANEL	J08		
	7			92	1	1			N	CONN. VU PANEL, CTL			
EXT-FAD				10	8	1			N	CONN. EXT. VU-PANEL	J08		
F-ACA40	1			6	5	2			Y	CONN. RECTIFIER DZ2			
	1			8	1	1			J	RECTIFIER DZ2			
F-ACB40	8			6	5	1			Y	CONN. RECTIFIER DZ2			
	8			8	1	2			J	RECTIFIER DZ2			
F-LINE1	1			1	1	5				CONNECTOR POWER INPUT	P01		
	1			2	1	1			J	POWER SWITCH			

EDITION: OKTOBER 1991

```
*****************************************************************************************************************************
*   STUDER REVOX AG   *    S I G N A L    W I R E    L I S T                  *  91/07/18  *  16:53  *   P A G E  62   *
*****************************************************************************************************************************
*            1.807.010.00  * STUDER  A 807 TAPE RECORDER 2 CH *                  *  91/07/10 - 00                          *
*****************************************************************************************************************************
```

SIGNAL NAME	COLOR	MI	ASY	GRP	ELM	PNT	S	LV	TYPE	DESCRIPTION OF ELEMENT		REMARK	ELEMENT NR.
FAD1	1			1	6	11			B	PARALLEL REMOTE CONNECTOR			
	1			10	11	1			N	CONN. PARALLEL REMOTE A	J11		
	1			51	11	1			N	CONN. PARALLEL REMOTE A	J11		
FAD2	2			1	6	12			B	PARALLEL REMOTE CONNECTOR			
	2			10	11	2			N	CONN. PARALLEL REMOTE A	J11		
	2			51	11	2			N	CONN. PARALLEL REMOTE A	J11		
GND	5-4			1	1	3				CONNECTOR POWER INPUT	P01		
				1	2	1				CONN. GROUND			
				10	15	1			Y	CONN. GROUND (TP 12)			
HALL1A	7			20	3	4			N	CONN. CAPSTAN TACHO	J03		
	7			21	2	4			N	CONN. CAPSTAN CTL, J03			
HALL1B	8			20	3	5			N	CONN. CAPSTAN TACHO	J03		
	8			21	2	5			N	CONN. CAPSTAN CTL, J03			
HALL2A	5			20	3	6			N	CONN. CAPSTAN TACHO	J03		
	5			21	2	6			N	CONN. CAPSTAN CTL, J03			
HALL2B	6			20	3	7			N	CONN. CAPSTAN TACHO	J03		
	6			21	2	7			N	CONN. CAPSTAN CTL, J03			
HALL3A	3			20	3	8			N	CONN. CAPSTAN TACHO	J03		
	3			21	2	8			N	CONN. CAPSTAN CTL, J03			
HALL3B	4			20	3	9			N	CONN. CAPSTAN TACHO	J03		
	4			21	2	9			N	CONN. CAPSTAN CTL, J03			
INSRT-ON	3			1	11	13			A	AUDIO INSERT CONNECTOR			
	3			48	1	8			N	CONN. RECORD INSERT			
IR-REFEX	3			1	6	13			B	PARALLEL REMOTE CONNECTOR			
	3			1	7	13			B	SYNCHRONIZER CONNECTOR			
	3			10	11	3			N	CONN. PARALLEL REMOTE A	J11		
	3			10	13	3			N	CONN. SYNCHRONIZER A	J13		
	3			51	11	3			N	CONN. PARALLEL REMOTE A	J11		
K-BRAKE	1			10	7	1			N	CONN. SOLENOIDS	J07		
	1			25	1	1			X	CONN. TAPE DECK CTL. J07			
K-LIFT	8			10	7	3			N	CONN. SOLENOIDS	J07		
	8			27	1	2			X	CONN. TAPE DECK CTL. J07			
K-PRESS	9			10	7	5			N	CONN. SOLENOIDS	J07		
	9			26	1	2			X	CONN. TAPE DECK CTL. J07			
LINE1	1			1	1	1				CONNECTOR POWER INPUT	P01		
	1			1	1	4				CONNECTOR POWER INPUT	P01		
LINE2	6			1	1	2				CONNECTOR POWER INPUT	P01		
	6			2	1	2			J	POWER SWITCH			
LINFA-TC				70	11	15				CONN. TIME CODE WRITE/READ UNIT	J11		
				70	21	15				TIME CODE WRITE/READ UNIT			

* STUDER REVOX AG * S I G N A L W I R E L I S T * 91/07/18 * 16:53 * P A G E 63 *

* 1.807.010.00 * STUDER A 807 TAPE RECORDER 2 CH * * 91/07/10 - 00 *

SIGNAL NAME	COLOR	MI	ASY	GRP	ELM	PNT	S	LV	TYPE	DESCRIPTION OF ELEMENT		REMARK	ELEMENT NR.
LINFB-TC				70	11	16				CONN. TIME CODE WRITE/READ UNIT	J11		
				70	21	16				TIME CODE WRITE/READ UNIT			
LOUFA-TC				70	11	17				CONN. TIME CODE WRITE/READ UNIT	J11		
				70	21	17				TIME CODE WRITE/READ UNIT			
LOUFB-TC				70	11	18				CONN. TIME CODE WRITE/READ UNIT	J11		
				70	21	18				TIME CODE WRITE/READ UNIT			
MRX-A				30	4	9			N	CONN. KEYS MATRIX			
MRX-B				30	4	10			N	CONN. KEYS MATRIX			
MRX-C				30	4	11			N	CONN. KEYS MATRIX			
MRX-D				30	4	12			N	CONN. KEYS MATRIX			
MRX-E	3			30	4	13			N	CONN. KEYS MATRIX			
	3			70	7	5			N	CONN. KEYBOARD CTL.	J07		
MRX-F	4			30	4	14			N	CONN. KEYS MATRIX			
	4			70	7	1			N	CONN. KEYBOARD CTL.	J07		
MRX-G				30	4	15			N	CONN. KEYS MATRIX			
MRX-H				30	4	16			N	CONN. KEYS MATRIX			
MS-C76K	1			10	6	1			N	CONN. SPOOLING MOTOR CTL.	J06		
	1			11	3	6			N	CONN. TAPE DECK CTL.	J03		
MS-DIREN	5			10	6	5			N	CONN. SPOOLING MOTOR CTL.	J06		
	5			11	3	13			N	CONN. TAPE DECK CTL.	J03		
MS-MVCLK	4			10	6	14			N	CONN. SPOOLING MOTOR CTL.	J06		
	4			11	3	2			N	CONN. TAPE DECK CTL.	J03		
MS-MVDIR	3			10	6	13			N	CONN. SPOOLING MOTOR CTL.	J06		
	3			11	3	5			N	CONN. TAPE DECK CTL.	J03		
MS-ON	6			10	6	6			N	CONN. SPOOLING MOTOR CTL.	J06		
	6			11	3	15			N	CONN. TAPE DECK CTL.	J03		
MS-PRESS	2			10	6	2			N	CONN. SPOOLING MOTOR CTL.	J06		
	2			11	3	1			N	CONN. TAPE DECK CTL.	J03		
MS-REFA	8			10	6	8			N	CONN. SPOOLING MOTOR CTL.	J06		
	8			11	3	9			N	CONN. TAPE DECK CTL.	J03		
MS-REFB	7			10	6	7			N	CONN. SPOOLING MOTOR CTL.	J06		
	7			11	3	11			N	CONN. TAPE DECK CTL.	J03		
MS-REW	4			10	6	4			N	CONN. SPOOLING MOTOR CTL.	J06		
	4			11	3	17			N	CONN. TAPE DECK CTL.	J03		
MS-SHUTL	3			10	6	3			N	CONN. SPOOLING MOTOR CTL.	J06		
	3			11	3	20			N	CONN. TAPE DECK CTL.	J03		

* STUDER REVOX AG * S I G N A L W I R E L I S T * 91/07/18 * 16:53 * P A G E 64 *

* 1.807.010.00 * STUDER A 807 TAPE RECORDER 2 CH * * 91/07/10 - 00 *

SIGNAL NAME	COLOR	MI	ASY	GRP	ELM	PNT	S	LV	TYPE	DESCRIPTION OF ELEMENT		REMARK	ELEMENT NR.
MV-CLK1	1			10	3	5			N	CONN. MOVE SENSOR	J03		
	0			10	16	1			Y	CONN. TESTPOINT (TP05)			
	1			24	1	3			N	CONN. TAPE DECK CTL. J03			
	0			70	2	10			N	CONN. AUDIO CONTROL	J02		
MV-CLK2	2			10	3	3			N	CONN. MOVE SENSOR	J03		
	2			24	1	1			N	CONN. TAPE DECK CTL. J03			
M1-R				11	7	2			N	CONN. SP. MOTOR FILTER, LEFT	J07		
				11	7	3			N	CONN. SP. MOTOR FILTER, LEFT	J07		
				12	1	2			N	CONN. SP. MOTOR CTL,	P01		
				12	1	3			N	CONN. SP. MOTOR CTL,	P01		
	2			12	3	1				CONN. SP. MOTOR LEFT	J01		
	2			15	1	1				CONN. SP. MOTOR FILTER, J01			
M1-S				11	7	4			N	CONN. SP. MOTOR FILTER, LEFT	J07		
				11	7	5			N	CONN. SP. MOTOR FILTER, LEFT	J07		
				12	1	4			N	CONN. SP. MOTOR CTL,	P01		
				12	1	5			N	CONN. SP. MOTOR CTL,	P01		
	9			12	3	2				CONN. SP. MOTOR LEFT	J01		
	9			15	1	2				CONN. SP. MOTOR FILTER, J01			
M1-T				11	7	8			N	CONN. SP. MOTOR FILTER, LEFT	J07		
				11	7	9			N	CONN. SP. MOTOR FILTER, LEFT	J07		
				12	1	8			N	CONN. SP. MOTOR CTL,	P01		
				12	1	9			N	CONN. SP. MOTOR CTL,	P01		
	6			12	3	3				CONN. SP. MOTOR LEFT	J01		
	6			15	1	3				CONN. SP. MOTOR FILTER, J01			
M1-TACHO	1			10	6	11			N	CONN. SPOOLING MOTOR CTL.	J06		
	1			11	3	8			N	CONN. TAPE DECK CTL.	J03		
M1-TSENS	4			11	5	4			N	CONN. SP. MOTOR TACHO, LEFT	J05		
	4			17	1	3			N	CONN. SP. MOTOR CTL, J05			
M2-R				11	8	1			N	CONN. SP. MOTOR FILTER, RIGHT	J08		
				11	8	2			N	CONN. SP. MOTOR FILTER, RIGHT	J08		
				12	2	1			N	CONN. SP. MOTOR CTL,	P02		
				12	2	2			N	CONN. SP. MOTOR CTL,	P02		
	2			12	4	1				CONN. SP. MOTOR RIGHT	J02		
	2			16	1	1				CONN. SP. MOTOR FILTER, J01			
M2-REFAN	0			10	6	10			N	CONN. SPOOLING MOTOR CTL.	J06		
	0			11	3	14			N	CONN. TAPE DECK CTL.	J03		
M2-S				11	8	3			N	CONN. SP. MOTOR FILTER, RIGHT	J08		
				11	8	4			N	CONN. SP. MOTOR FILTER, RIGHT	J08		
				12	2	3			N	CONN. SP. MOTOR CTL,	P02		
				12	2	4			N	CONN. SP. MOTOR CTL,	P02		
	9			12	4	2				CONN. SP. MOTOR RIGHT	J02		
	9			16	1	2				CONN. SP. MOTOR FILTER, J01			
M2-T				11	8	5			N	CONN. SP. MOTOR FILTER, RIGHT	J08		
				11	8	6			N	CONN. SP. MOTOR FILTER, RIGHT	J08		
				12	2	5			N	CONN. SP. MOTOR CTL,	P02		

* STUDER REVOX AG * S I G N A L W I R E L I S T * 91/07/18 * 16:53 * P A G E 65 *
* 1.807.010.00 * STUDER A 807 TAPE RECORDER 2 CH * * 91/07/10 - 00 *

SIGNAL NAME	COLOR	MI	ASY	GRP	ELM	PNT	S	LV	TYPE	DESCRIPTION OF ELEMENT		REMARK	ELEMENT NR.
<<-- CONT.OF				12	2	6			N	CONN. SP. MOTOR CTL,	P02		
M2-T	6			12	4	3				CONN. SP. MOTOR RIGHT	J02		
	6			16	1	3				CONN. SP. MOTOR FILTER, J01			
M2-TACHO	2			10	6	12			N	CONN. SPOOLING MOTOR CTL.	J06		
	2			11	3	7			N	CONN. TAPE DECK CTL.	J03		
M2-TSENS	4			11	4	4			N	CONN. SP. MOTOR TACHO, RIGHT	J04		
	4			18	1	3			N	CONN. SP. MOTOR CTL, J04			
M3-CLK	4			10	2	4			N	CONN. CAPSTAN CTL.	J02		
	4			20	1	1			N	CONN. TAPE DECK CTL.	J01		
M3-C76K	1			10	2	1			N	CONN. CAPSTAN CTL.	J02		
	1			20	1	4			N	CONN. TAPE DECK CTL.	J01		
M3-DATA	5			10	2	5			N	CONN. CAPSTAN CTL.	J02		
	5			20	1	2			N	CONN. TAPE DECK CTL.	J01		
M3-EN	3			10	2	3			N	CONN. CAPSTAN CTL.	J02		
	3			20	1	3			N	CONN. TAPE DECK CTL.	J01		
M3-R	0			20	4	1			N	CONN. CAPSTAN MOTOR	J04		
	0			21	1	1			N	CONN. CAPSTAN CTL, J04			
M3-REFEX	8			10	2	8			N	CONN. CAPSTAN CTL.	J02		
	8			20	1	13			N	CONN. TAPE DECK CTL.	J01		
M3-S	2			20	4	3			N	CONN. CAPSTAN MOTOR	J04		
	2			21	1	3			N	CONN. CAPSTAN CTL, J04			
M3-SYNC	7			10	2	7			N	CONN. CAPSTAN CTL.	J02		
	7			20	1	5			N	CONN. TAPE DECK CTL.	J01		
M3-T	9			20	4	4			N	CONN. CAPSTAN MOTOR	J04		
	9			21	1	4			N	CONN. CAPSTAN CTL, J04			
M3-TACHO	6			10	2	6			N	CONN. CAPSTAN CTL.	J02		
	6			20	1	14			N	CONN. TAPE DECK CTL.	J01		
M3-9600	2			10	2	2			N	CONN. CAPSTAN CTL.	J02		
	2			20	1	12			N	CONN. TAPE DECK CTL.	J01		
OR-CMCLK	1			1	7	11			B	SYNCHRONIZER CONNECTOR			
	1			10	13	1			N	CONN. SYNCHRONIZER A	J13		
OR-MVCLK	5			1	7	7			B	SYNCHRONIZER CONNECTOR			
	5			10	13	5			N	CONN. SYNCHRONIZER A	J13		
OR-MVDIR	6			1	7	10			B	SYNCHRONIZER CONNECTOR			
	6			10	13	6			N	CONN. SYNCHRONIZER A	J13		
OR-SYENB	8			1	7	12			B	SYNCHRONIZER CONNECTOR			
	8			10	14	8			N	CONN. SYNCHRONIZER B	J14		

* STUDER REVOX AG * S I G N A L W I R E L I S T * 91/07/18 * 16:53 * P A G E 66 *
* 1.807.010.00 * STUDER A 807 TAPE RECORDER 2 CH * * 91/07/10 - 00 *

SIGNAL NAME	COLOR	MI	ASY	GRP	ELM	PNT	S	LV	TYPE	DESCRIPTION OF ELEMENT		REMARK	ELEMENT NR.
PRIMW-1	1			4	1	5			L	VOLTAGE SELECTOR			
	1			5	1	1			Y	PRIMARY 1	P01		
PRIMW-3	3			4	1	2			L	VOLTAGE SELECTOR			
	3			5	1	3			Y	PRIMARY 1	P01		
PRIMW-4	4-4			4	1	4A			L	VOLTAGE SELECTOR			
	4			5	1	4			Y	PRIMARY 1	P01		
PRIMW-5	5			4	1	6			L	VOLTAGE SELECTOR			
	5			5	2	5			Y	PRIMARY 2	P02		
PRIMW-6	6-4			4	1	4B			L	VOLTAGE SELECTOR			
	6			5	2	6			Y	PRIMARY 2	P02		
PRIMW-7	7			4	1	3			L	VOLTAGE SELECTOR			
	7			5	2	7			Y	PRIMARY 2	P02		
R-RECLVA	4			44	1	4			N	CONN. M/S ADJUSTMENT			
	4			46	1	1			L	CONN. M/S INPUT AMPL. J01			
R-RECLVB	5			44	1	5			N	CONN. M/S ADJUSTMENT			
	5			46	1	2			L	CONN. M/S INPUT AMPL. J01			
R-REPLVA	1			45	2	2			Y	CONN. M/S ADJUSTMENT			
	1			46	1	3			L	CONN. M/S INPUT AMPL. J01			
R-REPLVB	3			45	2	1			Y	CONN. M/S ADJUSTMENT			
	3			46	1	4			L	CONN. M/S INPUT AMPL. J01			
R-SHUTL1	1			11	6	1			N	CONN. SHUTTLE CTL.	J06		
	1			30	7	1			L	SHUTTLE POTMETER			
R-SHUTL2	2			11	6	2			N	CONN. SHUTTLE CTL.	J06		
	2			30	7	2			L	SHUTTLE POTMETER			
R-SHUTL3	3			11	6	4			N	CONN. SHUTTLE CTL.	J06		
	3			30	7	3			L	SHUTTLE POTMETER			
R-VRSPD	8			20	2	3			N	CONN. VARI SPEED CTL.	J02		
	8			35	7	2			L	VARIO SPEED POTM.			
RCVDATA	1			1	3	8			B	SERIAL CTL. CONNECTOR			
	1			10	4	1			N	CONN. SERIAL CTL.	J04		
	1			70	4	1			N	CONN. TAPE DECK SERIAL CTL.	J04		
	1			70	5	1			N	CONN. RS 232	J05		
RECHH-TC	9			39	1	5			B	CONN. AUDIO ELECTRONICS			
				70	1	6			N	TO HEAD BLOCK CONNECTOR	J01		
				70	11	7				CONN. TIME CODE WRITE/READ UNIT	J11		
				70	21	7				TIME CODE WRITE/READ UNIT			
RECHH-01	8			39	1	8			B	CONN. AUDIO ELECTRONICS			
	8			41	4	1			N	CONN. HEAD BLOCK, RECORD			

* STUDER REVOX AG * S I G N A L W I R E L I S T * 91/07/18 * 16:53 * P A G E 67 *

* 1.807.010.00 * STUDER A 807 TAPE RECORDER 2 CH * * 91/07/10 - 00 *

SIGNAL NAME	COLOR	MI	ASY	GRP	ELM	PNT	S	LV	TYPE	DESCRIPTION OF ELEMENT		REMARK	ELEMENT NR.
RECHH-02	1			39	1	21			B	CONN. AUDIO ELECTRONICS			
	1			42	4	1			N	CONN. HEAD BLOCK, RECORD			
RECHL-TC	6			39	1	4			B	CONN. AUDIO ELECTRONICS			
				70	1	5			N	TO HEAD BLOCK CONNECTOR	J01		
				70	11	8				CONN. TIME CODE WRITE/READ UNIT	J11		
				70	21	8				TIME CODE WRITE/READ UNIT			
RECHL-01	7			39	1	7			B	CONN. AUDIO ELECTRONICS			
	7			41	4	2			N	CONN. HEAD BLOCK, RECORD			
RECHL-02	0			39	1	20			B	CONN. AUDIO ELECTRONICS			
	0			42	4	2			N	CONN. HEAD BLOCK, RECORD			
RECSC-TC	S			39	1	6			B	CONN. AUDIO ELECTRONICS			
				70	1	7			N	TO HEAD BLOCK CONNECTOR	J01		
REPHH-TC				70	11	10				CONN. TIME CODE WRITE/READ UNIT	J11		
				70	21	10				TIME CODE WRITE/READ UNIT			
REPHH-01	9			39	1	2			B	CONN. AUDIO ELECTRONICS			
	9			41	5	2			N	CONN. HEAD BLOCK, REPRO			
REPHH-02	9			39	1	15			B	CONN. AUDIO ELECTRONICS			
	9			42	5	2			N	CONN. HEAD BLOCK, REPRO			
REPHL-TC				70	11	11				CONN. TIME CODE WRITE/READ UNIT	J11		
				70	21	11				TIME CODE WRITE/READ UNIT			
REPHL-01	6			39	1	1			B	CONN. AUDIO ELECTRONICS			
	6			41	5	1			N	CONN. HEAD BLOCK, REPRO			
REPHL-02	6			39	1	14			B	CONN. AUDIO ELECTRONICS			
	6			42	5	1			N	CONN. HEAD BLOCK, REPRO			
REPSC-01	S			39	1	3			B	CONN. AUDIO ELECTRONICS			
	S			41	5	4			N	CONN. HEAD BLOCK, REPRO			
REPSC-02	S			39	1	16			B	CONN. AUDIO ELECTRONICS			
	S			42	5	4			N	CONN. HEAD BLOCK, REPRO			
S-LINE1	1			2	1	3			J	POWER SWITCH			
	1			3	1	1			J	MAINS FILTER, INPUT			
S-LINE2	6			2	1	4			J	POWER SWITCH			
	6			3	1	2			J	MAINS FILTER, INPUT			
S-TAPOUT	9			10	6	9			N	CONN. SPOOLING MOTOR CTL.	J06		
	9			11	3	3			N	CONN. TAPE DECK CTL.	J03		
S-TGATT	6			44	1	16			N	CONN. M/S ADJUSTMENT			
	6			46	2	4			L	TEST GEN. LEVEL SWITCH			
S-TGINHI	3			44	1	13			N	CONN. M/S ADJUSTMENT			
				46	3	17			L	TEST GEN. FREQUENCY SWITCH			

* STUDER REVOX AG * S I G N A L W I R E L I S T * 91/07/18 * 16:53 * P A G E 68 *

* 1.807.010.00 * STUDER A 807 TAPE RECORDER 2 CH * * 91/07/10 - 00 *

SIGNAL NAME	COLOR	MI	ASY	GRP	ELM	PNT	S	LV	TYPE	DESCRIPTION OF ELEMENT		REMARK	ELEMENT NR.
S-TGOFF	1			44	1	11			N	CONN. M/S ADJUSTMENT			
	1			46	3	11			L	TEST GEN. FREQUENCY SWITCH			
S-TG0	2			44	1	12			N	CONN. M/S ADJUSTMENT			
	2			46	3	7			L	TEST GEN. FREQUENCY SWITCH			
				46	3	12			L	TEST GEN. FREQUENCY SWITCH			
				46	3	13			L	TEST GEN. FREQUENCY SWITCH			
				46	3	14			L	TEST GEN. FREQUENCY SWITCH			
				46	3	15			L	TEST GEN. FREQUENCY SWITCH			
				46	3	16			L	TEST GEN. FREQUENCY SWITCH			
S-TG1K	8			44	1	8			N	CONN. M/S ADJUSTMENT			
	8			46	3	4			L	TEST GEN. FREQUENCY SWITCH			
S-TG10DB	7			44	1	17			N	CONN. M/S ADJUSTMENT			
	2			44	2	2			N	CONN. M/S OUTPUT APML.			
	2			45	1	2			L	CONN. M/S INPUT AMPL. J01			
	2			46	2	2			L	TEST GEN. LEVEL SWITCH			
S-TG10K	9			44	1	9			N	CONN. M/S ADJUSTMENT			
	9			46	3	5			L	TEST GEN. FREQUENCY SWITCH			
S-TG125	7			44	1	7			N	CONN. M/S ADJUSTMENT			
	7			46	3	3			L	TEST GEN. FREQUENCY SWITCH			
S-TG16K	0			44	1	10			N	CONN. M/S ADJUSTMENT			
	0			46	3	6			L	TEST GEN. FREQUENCY SWITCH			
S-TG20DB	8			44	1	18			N	CONN. M/S ADJUSTMENT			
	1			44	2	1			N	CONN. M/S OUTPUT APML.			
	1			45	1	1			L	CONN. M/S INPUT AMPL. J01			
	1			46	2	3			L	TEST GEN. LEVEL SWITCH			
S-TG60	6			44	1	6			N	CONN. M/S ADJUSTMENT			
	6			46	3	2			L	TEST GEN. FREQUENCY SWITCH			
SF-LINE1	1			3	2	1			J	MAINS FILTER, OUTPUT			
	2-1			4	1	7			L	VOLTAGE SELECTOR			
	2			5	1	2			Y	PRIMARY 1	P01		
SF-LINE2	6			3	2	2			J	MAINS FILTER, OUTPUT			
	6-8			4	1	1			L	VOLTAGE SELECTOR			
	8			5	2	8			Y	PRIMARY 2	P02		
SM-D0	8			10	9	8			N	CONN. COMMAND PANEL	J09		
	8			30	3	1			D	CONN. TAPE DECK CTL. J10			
	0			30	4	1			N	CONN. KEYS MATRIX			
	8			51	9	8			N	CONN. COMMAND PANEL	J09		
	0			70	7	3			N	CONN. KEYBOARD CTL.	J07		
SM-D1	7			10	9	7			N	CONN. COMMAND PANEL	J09		
	7			30	3	2			D	CONN. TAPE DECK CTL. J10			
				30	4	2			N	CONN. KEYS MATRIX			
	7			51	9	7			N	CONN. COMMAND PANEL	J09		

* STUDER REVOX AG * S I G N A L W I R E L I S T * 91/07/18 * 16:53 * P A G E 69 *

* 1.807.010.00 * STUDER A 807 TAPE RECORDER 2 CH * * 91/07/10 - 00 *

SIGNAL NAME	COLOR	MI	ASY	GRP	ELM	PNT	S	LV	TYPE	DESCRIPTION OF ELEMENT		REMARK	ELEMENT NR.
SM-D2	6			10	9	6			N	CONN. COMMAND PANEL	J09		
	6			30	3	3			D	CONN. TAPE DECK CTL. J10			
				30	4	3			N	CONN. KEYS MATRIX			
	6			51	9	6			N	CONN. COMMAND PANEL	J09		
SM-D3	5			10	9	5			N	CONN. COMMAND PANEL	J09		
	5			30	3	4			D	CONN. TAPE DECK CTL. J10			
				30	4	4			N	CONN. KEYS MATRIX			
	5			51	9	5			N	CONN. COMMAND PANEL	J09		
SM-D4	4			10	9	4			N	CONN. COMMAND PANEL	J09		
	4			30	3	5			D	CONN. TAPE DECK CTL. J10			
				30	4	5			N	CONN. KEYS MATRIX			
	4			51	9	4			N	CONN. COMMAND PANEL	J09		
SM-D5	3			10	9	3			N	CONN. COMMAND PANEL	J09		
	3			30	3	6			D	CONN. TAPE DECK CTL. J10			
				30	4	6			N	CONN. KEYS MATRIX			
	3			51	9	3			N	CONN. COMMAND PANEL	J09		
SM-D6	2			10	9	2			N	CONN. COMMAND PANEL	J09		
	2			30	3	7			D	CONN. TAPE DECK CTL. J10			
				30	4	7			N	CONN. KEYS MATRIX			
	2			51	9	2			N	CONN. COMMAND PANEL	J09		
SM-D7	1			10	9	1			N	CONN. COMMAND PANEL	J09		
	1			30	3	8			D	CONN. TAPE DECK CTL. J10			
				30	4	8			N	CONN. KEYS MATRIX			
	1			51	9	1			N	CONN. COMMAND PANEL	J09		
SN-DATA	2			1	3	2			B	SERIAL CTL. CONNECTOR			
	2			10	4	5			B	CONN. SERIAL CTL.	J04		
	2			70	4	5			N	CONN. TAPE DECK SERIAL CTL.	J04		
	2			70	5	5			N	CONN. RS 232	J05		
SR-FADRY	5			1	6	6			B	PARALLEL REMOTE CONNECTOR			
	5			10	11	5			N	CONN. PARALLEL REMOTE A	J11		
	5			51	11	5			N	CONN. PARALLEL REMOTE A	J11		
SR-FORW	0			1	6	21			B	PARALLEL REMOTE CONNECTOR			
	0			1	7	21			B	SYNCHRONIZER CONNECTOR			
	0			10	11	10			N	CONN. PARALLEL REMOTE A	J11		
	0			10	13	10			N	CONN. SYNCHRONIZER A	J13		
	0			51	11	10			N	CONN. PARALLEL REMOTE A	J11		
SR-LIFT	7			1	6	17			B	PARALLEL REMOTE CONNECTOR			
	7			1	7	17			B	SYNCHRONIZER CONNECTOR			
	7			10	11	7			N	CONN. PARALLEL REMOTE A	J11		
	7			10	13	7			N	CONN. SYNCHRONIZER A	J13		
	7			51	11	7			N	CONN. PARALLEL REMOTE A	J11		
SR-LOCST	6			1	6	18			B	PARALLEL REMOTE CONNECTOR			
	6			10	11	6			N	CONN. PARALLEL REMOTE A	J11		
	6			51	11	6			N	CONN. PARALLEL REMOTE A	J11		

* STUDER REVOX AG * S I G N A L W I R E L I S T * 91/07/18 * 16:53 * P A G E 70 *

* 1.807.010.00 * STUDER A 807 TAPE RECORDER 2 CH * * 91/07/10 - 00 *

SIGNAL NAME	COLOR	MI	ASY	GRP	ELM	PNT	S	LV	TYPE	DESCRIPTION OF ELEMENT		REMARK	ELEMENT NR.
SR-MUTE	4			1	7	18			B	SYNCHRONIZER CONNECTOR			
	4			10	13	4			N	CONN. SYNCHRONIZER A	J13		
SR-PLAY	9			1	6	22			B	PARALLEL REMOTE CONNECTOR			
	9			1	7	22			B	SYNCHRONIZER CONNECTOR			
	9			10	11	9			N	CONN. PARALLEL REMOTE A	J11		
	9			10	13	9			N	CONN. SYNCHRONIZER A	J13		
	9			51	11	9			N	CONN. PARALLEL REMOTE A	J11		
SR-REC	3			1	6	19			B	PARALLEL REMOTE CONNECTOR			
	3			1	7	19			B	SYNCHRONIZER CONNECTOR			
	3			10	11	13			N	CONN. PARALLEL REMOTE A	J11		
	3			10	13	13			N	CONN. SYNCHRONIZER A	J13		
	3			51	11	13			N	CONN. PARALLEL REMOTE A	J11		
SR-RESET	5			1	6	10			B	PARALLEL REMOTE CONNECTOR			
	5			10	11	15			N	CONN. PARALLEL REMOTE A	J11		
	5			51	11	15			N	CONN. PARALLEL REMOTE A	J11		
SR-REW	1			1	6	20			B	PARALLEL REMOTE CONNECTOR			
	1			1	7	20			B	SYNCHRONIZER CONNECTOR			
	1			10	11	11			N	CONN. PARALLEL REMOTE A	J11		
	1			10	13	11			N	CONN. SYNCHRONIZER A	J13		
	1			51	11	11			N	CONN. PARALLEL REMOTE A	J11		
SR-STOP	2			1	6	23			B	PARALLEL REMOTE CONNECTOR			
	2			1	7	23			B	SYNCHRONIZER CONNECTOR			
	2			10	11	12			N	CONN. PARALLEL REMOTE A	J11		
	2			10	13	12			N	CONN. SYNCHRONIZER A	J13		
	2			51	11	12			N	CONN. PARALLEL REMOTE A	J11		
SR-VRSPD	4			1	6	5			B	PARALLEL REMOTE CONNECTOR			
	4			1	7	5			B	SYNCHRONIZER CONNECTOR			
	4			10	11	14			N	CONN. PARALLEL REMOTE A	J11		
	4			10	13	14			N	CONN. SYNCHRONIZER A	J13		
	4			51	11	14			N	CONN. PARALLEL REMOTE A	J11		
SR-ZLOC	6			1	6	14			B	PARALLEL REMOTE CONNECTOR			
	6			10	11	16			N	CONN. PARALLEL REMOTE A	J11		
	6			51	11	16			N	CONN. PARALLEL REMOTE A	J11		
SRPHH-01	9			43	1	6			N	CONN. HEAD BLOCK,SEC REPRO			
SRPHH-02	9			43	1	3			N	CONN. HEAD BLOCK,SEC REPRO			
SRPHL-01	6			43	1	5			N	CONN. HEAD BLOCK,SEC REPRO			
SRPHL-02	6			43	1	1			N	CONN. HEAD BLOCK,SEC REPRO			
SRPSC-01	S			43	1	7			N	CONN. HEAD BLOCK,SEC REPRO			
SRPSC-02	S			43	1	4			N	CONN. HEAD BLOCK,SEC REPRO			
T-TCINDL				70	11	1				CONN. TIME CODE WRITE/READ UNIT	J11		
				70	21	1				TIME CODE WRITE/READ UNIT			

* STUDER REVOX AG * S I G N A L W I R E L I S T * 91/07/18 * 16:53 * P A G E 71 *
* 1.807.010.00 * STUDER A 807 TAPE RECORDER 2 CH * * 91/07/10 - 00 *

SIGNAL NAME	COLOR	MI	ASY	GRP	ELM	PNT	S	LV	TYPE	DESCRIPTION OF ELEMENT	REMARK	ELEMENT NR.
T-TCOUDL			70	11	2					CONN. TIME CODE WRITE/READ UNIT J11		
			70	21	2					TIME CODE WRITE/READ UNIT		
T-TCPRES			70	11	14					CONN. TIME CODE WRITE/READ UNIT J11		
			70	21	14					TIME CODE WRITE/READ UNIT		
TA-ACTTC			70	10	20					CONN. TIME CODE WRITE/READ UNIT J10		
			70	21	20					TIME CODE WRITE/READ UNIT		
TACHO-3A	1		20	3	1				N	CONN. CAPSTAN TACHO J03		
	1		21	2	1				N	CONN. CAPSTAN CTL, J03		
TACHO-3B	9		20	3	2				N	CONN. CAPSTAN TACHO J03		
	9		21	2	2				N	CONN. CAPSTAN CTL, J03		
TC-INA	9		1	14	2					CONN. LINE INPUT, TC		
	9		70	9	2				N	CONN. TIME CODE INPUT/OUTPUT XLR J09		
TC-INB	6		1	14	3					CONN. LINE INPUT, TC		
	6		70	9	3				N	CONN. TIME CODE INPUT/OUTPUT XLR J09		
TC-INS	S		1	14	1					CONN. LINE INPUT, TC		
TC-INSC	S		70	9	1				N	CONN. TIME CODE INPUT/OUTPUT XLR J09		
TC-OUTA	9		1	13	2					CONN. LINE OUTPUT, TC		
	9		70	9	6				N	CONN. TIME CODE INPUT/OUTPUT XLR J09		
TC-OUTB	6		1	13	3					CONN. LINE OUTPUT, TC		
	6		70	9	7				N	CONN. TIME CODE INPUT/OUTPUT XLR J09		
TC-OUTS	S		1	13	1					CONN. LINE OUTPUT, TC		
TC-OUTSC	S		70	9	4				N	CONN. TIME CODE INPUT/OUTPUT XLR J09		
TD-C307K			70	10	25					CONN. TIME CODE WRITE/READ UNIT J10		
			70	21	25					TIME CODE WRITE/READ UNIT		
TRS-A	3		10	5	2				N	CONN. TAPE TRANSPARENT SENSOR J05		
	3		39	1	13				B	CONN. AUDIO ELECTRONICS		
TRS-C	4		10	5	4				N	CONN. TAPE TRANSPARENT SENSOR J05		
	4		39	1	24				B	CONN. AUDIO ELECTRONICS		
TRS-E	5		10	5	5				N	CONN. TAPE TRANSPARENT SENSOR J05		
	5		39	1	25				B	CONN. AUDIO ELECTRONICS		
TRS-K	2		10	5	1				N	CONN. TAPE TRANSPARENT SENSOR J05		
	2		39	1	12				B	CONN. AUDIO ELECTRONICS		
TTA-FORW	6		11	1	6				N	CONN. TAPE TENS. ADJUSTMENT J01		
	6		14	1	8				N	CONN. SP. MOTOR CTL, J01		
TTA-LIBR	3		11	1	3				N	CONN. TAPE TENS. ADJUSTMENT J01		
	3		14	1	4				N	CONN. SP. MOTOR CTL, J01		

* STUDER REVOX AG * S I G N A L W I R E L I S T * 91/07/18 * 16:53 * P A G E 72 *
* 1.807.010.00 * STUDER A 807 TAPE RECORDER 2 CH * * 91/07/10 - 00 *

SIGNAL NAME	COLOR	MI	ASY	GRP	ELM	PNT	S	LV	TYPE	DESCRIPTION OF ELEMENT	REMARK	ELEMENT NR.
TTA-PLAY	4		11	1	4				N	CONN. TAPE TENS. ADJUSTMENT J01		
	4		14	1	10				N	CONN. SP. MOTOR CTL, J01		
TTA-REW	5		11	1	5				N	CONN. TAPE TENS. ADJUSTMENT J01		
	5		14	1	6				N	CONN. SP. MOTOR CTL, J01		
TTA-SHT1	7		11	1	7				N	CONN. TAPE TENS. ADJUSTMENT J01		
	7		14	1	1				N	CONN. SP. MOTOR CTL, J01		
TTA-SHT2	8		11	1	8				N	CONN. TAPE TENS. ADJUSTMENT J01		
	8		14	1	2				N	CONN. SP. MOTOR CTL, J01		
TTA-SHT3	9		11	1	9				N	CONN. TAPE TENS. ADJUSTMENT J01		
	9		14	1	3				N	CONN. SP. MOTOR CTL, J01		
TX-DSPLY	2		1	4	2				B	TC REMOTE DISPLAY CONNECTOR		
	2		70	6	3				N	CONN. REMOTE DISPLAY J06		
U-PHTM			40	21	1				N	CONN. AUDIO ELECTRONICS CH1		
			40	41	1				N	CONN. AUDIO ELECTRONICS CH2		
WR-BIAS1			40	22	7				N	CONN. AUDIO ELECTRONICS CH1		
			41	12	7				N	CONN. AUDIO CTL, J22		
WR-BIAS2			40	42	7				N	CONN. AUDIO ELECTRONICS CH2		
			42	12	7				N	CONN. AUDIO CTL, J42		
WR-REC1			40	22	13				N	CONN. AUDIO ELECTRONICS CH1		
			41	12	13				N	CONN. AUDIO CTL, J22		
WR-REC2			40	42	13				N	CONN. AUDIO ELECTRONICS CH2		
			42	12	13				N	CONN. AUDIO CTL, J42		
WR-REPR1			40	24	5				N	CONN. AUDIO ELECTRONICS CH1		
			41	14	5				N	CONN. AUDIO CTL, J24		
WR-REPR2			40	44	5				N	CONN. AUDIO ELECTRONICS CH2		
			42	14	5				N	CONN. AUDIO CTL, J44		

A807 MKII ½" 4CH

SURVEY OF GROUPS (PART 1, FRONT-VIEW 4CH)

GRP, GRP/ELM DESIGNATION OF ASSEMBLIES

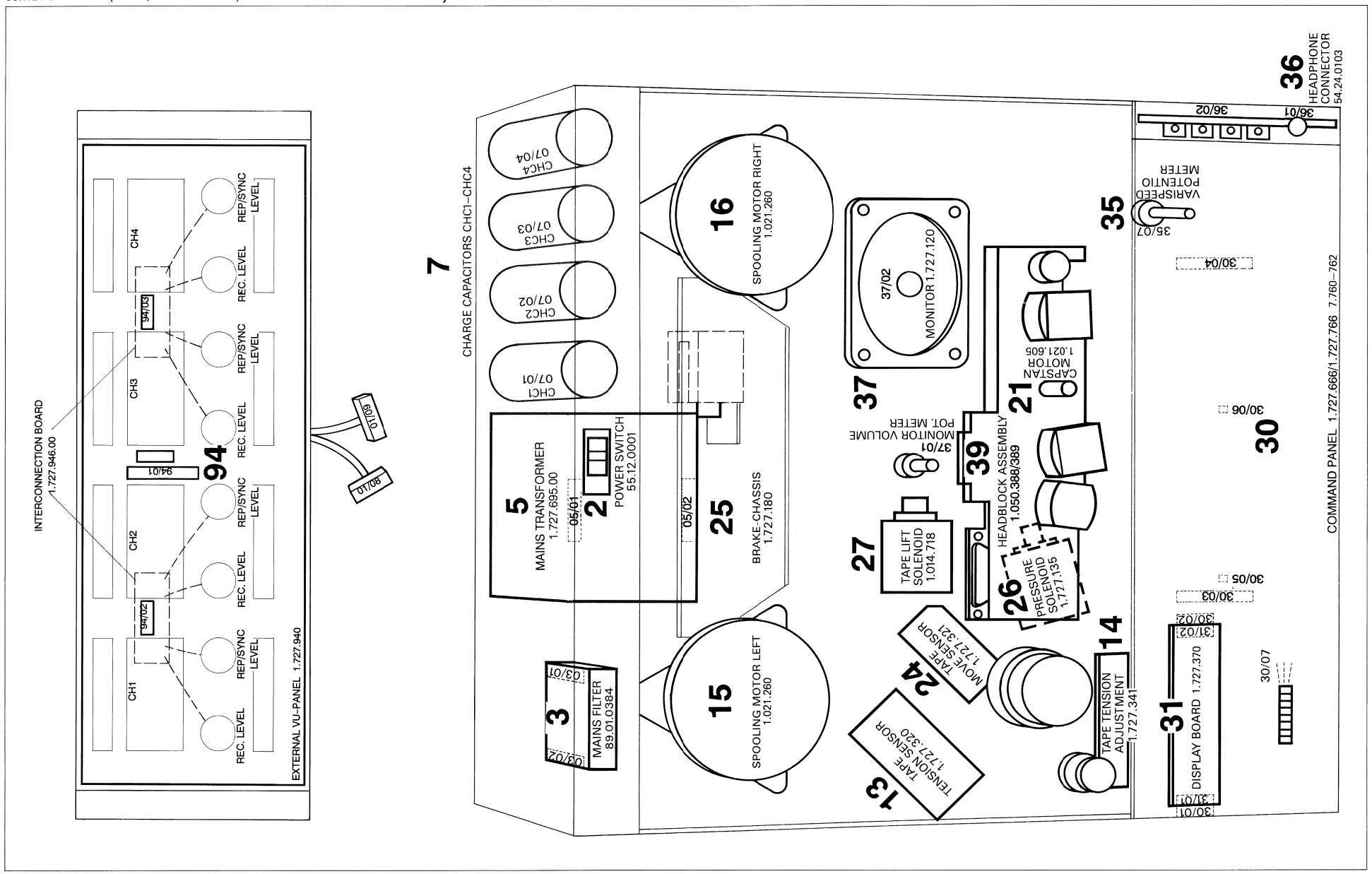

A807 MKII ½" 4CH

SURVEY OF GROUPS (PART 2 REAR VIEW 4CH)

GRP, GRP/ELM DESIGNATION OF ASSEMBLIES

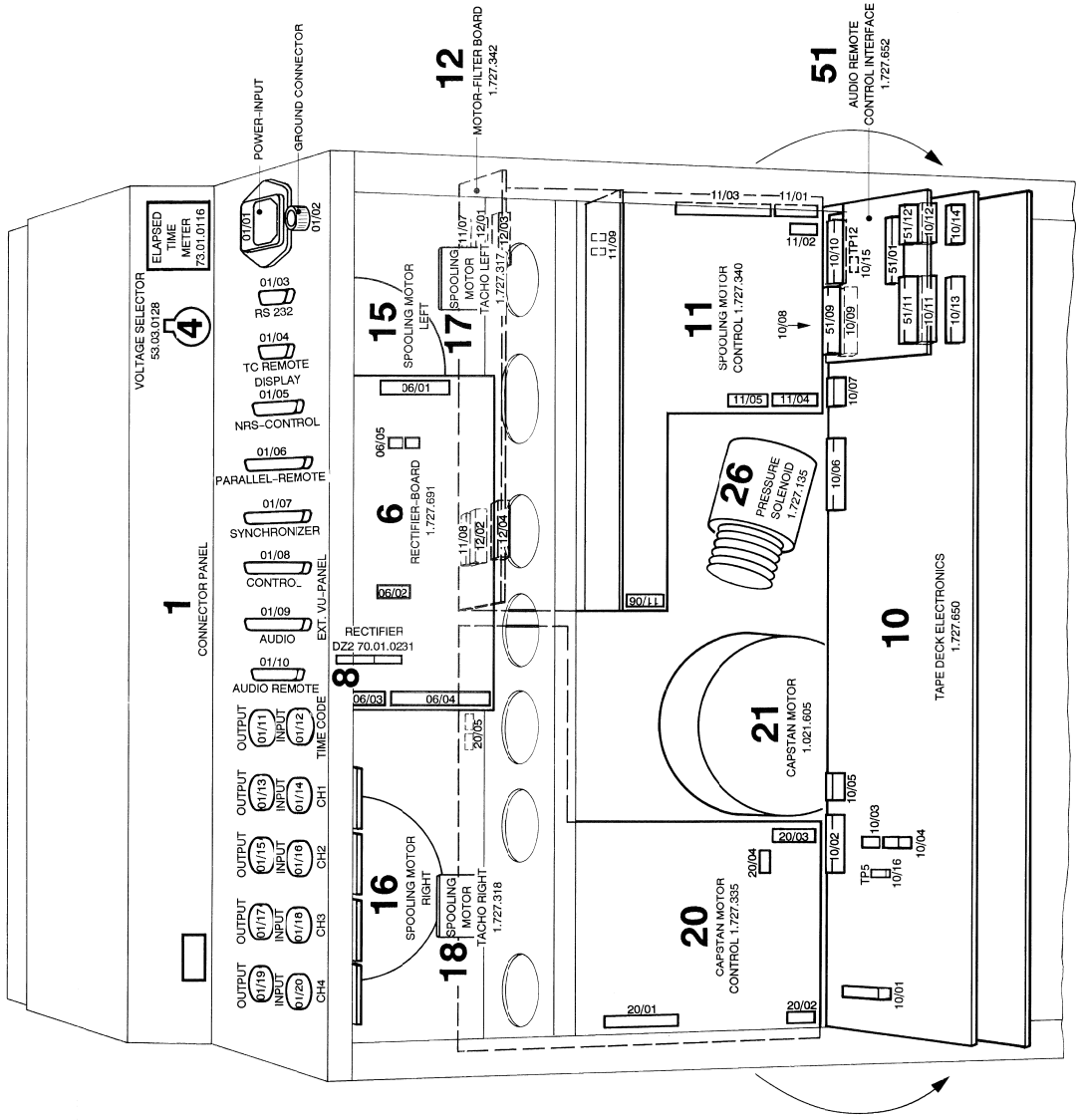

A807 MKII ½" 4CH

SURVEY OF GROUPS (PART 3 REAR VIEW 4CH)

GRP, GRP/ELM DESIGNATION OF ASSEMBLIES

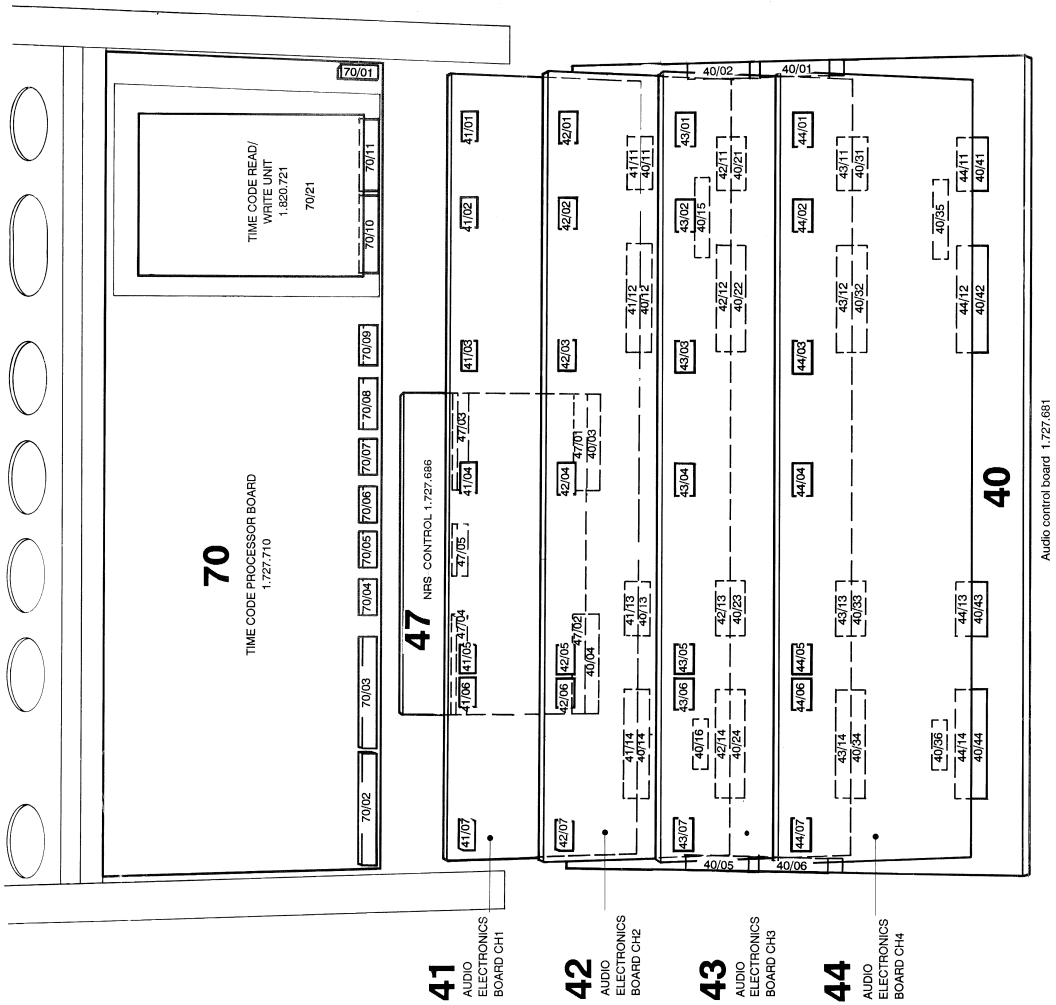

18.02.91. V4.11

PART NUMBER: 1.807.060.00 * STUDER A 807 TAPE RECORDER 4 CH * INDEX: 00

PAGE 1 OF 76

DATE OF ORIGIN: 91/07/10
DATE OF PROC. : 91/07/18

GROUP NODE = *
INTER GROUP NODE = #
DIRECT WIRE TO # = <
WIRING NOT COMPUTED = @

SUMMARY

ASSEMBLYS	0	
GROUPS	38	
ELEMENTS	191	
PINS (TOTAL)	1768	(UNUSED PINS 103)
MULTIPLE PINS	0	
CODING KEYS	101	
SIGNALS	511	(UNUSED SIGNALS 51)
RECORDS READ	2101	

OPTIONS SPECIFIED : ELMSUM, LOCLIS, SIGLIS, ALLCOL, WIRALL

OPTIONS USED : ELMSUM, LOCLIS, SIGLIS, ALLCOL, WIRALL

LISTINGS GENERATED :	PAGE	ERR	WRN
GROUP SUMMARY	2	0	0
ELEMENT SUMMARY	3	0	0
LOCATION PIN LIST	8	0	0
SIGNAL WIRE LIST	37	0	0

STUDER REVOX AG * GROUP SUMMARY * 91/07/18 * 17:00 * PAGE 2 *
1.807.060.00 * STUDER A 807 TAPE RECORDER 4 CH * * 91/07/10 - 00 *

ASY	GRP	PART NUMBER	DESCRIPTION	UNUSED PINS	USED PINS	TOT.PINS	MULT.PINS	COD.KEYS	TOT.ELM	REM
	1		CONNECTOR PANEL	23	154	177	0	7	20	
	2	55.12.0001	POWER SWITCH	0	4	4	0	0	1	
	3	89.01.0384	MAINS FILTER	0	4	4	0	0	2	
	4	53.03.0128	VOLTAGE SELECTOR	0	8	8	0	0	1	
	5	1.727.695.00	MAINS TRANSFORMER	0	19	19	0	0	2	
	6	1.727.691.00	RECTIFIER BOARD	2	43	45	0	2	5	
	7		CHARGE CAPACITORS	0	8	8	0	0	4	
	8	70.01.0231	RECTIFIER DZ2	0	4	4	0	0	1	
	10	1.727.650.20	TAPE DECK ELECTRONICS	1	153	154	0	15	16	
	11	1.727.340.21	SPOOLING MOTOR CONTROL	0	58	58	0	6	9	
	12	1.727.342.00	SP. MOTOR FILTER	0	22	22	0	0	4	
	13	1.727.320.00	TAPE TENSION SENSOR	0	4	4	0	1	1	
	14	1.727.341.00	TAPE TENS. ADJUSTMENT	0	8	8	0	0	1	
	15	1.021.260.00	SPOOLING MOTOR, LEFT	0	3	3	0	0	1	
	16	1.021.260.00	SPOOLING MOTOR, RIGHT	0	3	3	0	0	1	
	17	1.727.317.00	SP. MOTOR TACHO, LEFT	0	3	3	0	0	1	
	18	1.727.318.00	SP. MOTOR TACHO, RIGHT	0	3	3	0	0	1	
	20	1.727.335.20	CAPSTAN MOTOR CONTROL	0	32	32	0	4	5	
	21	1.021.605.00	CAPSTAN MOTOR	0	14	14	0	2	2	
	24	1.727.321.00	TAPE MOVE SENSOR	0	4	4	0	1	1	
	25	1.177.180.81	BRAKE CHASSIS	0	2	2	0	0	1	
	26	1.727.135.81	PRESS SOLENOID	0	2	2	0	0	1	
	27	1.014.718.00	TAPE LIFT SOLENOID	0	2	2	0	0	1	
	30	1.727.662.00	COMMAND PANEL	1	50	51	0	2	7	
	31	1.727.370.00	DISPLAY BOARD	0	8	8	0	0	2	
	35		LEVEL CONTROL PANEL	0	3	3	0	0	1	
	36	54.24.0103	PHONES CONNECTOR	0	11	11	0	1	2	
	37	1.727.120.00	MONITOR	4	10	14	0	0	2	
	39	1.050.382.00	HEAD BLOCK ASSEMBLY	0	38	38	0	0	1	
	40	1.727.681.00	AUDIO CONTROL BOARD	17	336	373	0	12	26	
	41	1.727.460.00	AUDIO ELECTRONICS CH1	0	88	88	0	7	11	
	42	1.727.460.00	AUDIO ELECTRONICS CH2	0	88	88	0	7	11	
	43	1.727.460.00	AUDIO ELECTRONICS CH3	0	88	88	0	7	11	
	44	1.727.460.00	AUDIO ELECTRONICS CH4	0	88	88	0	7	11	
	47	1.727.685.00	NRS-CONTROL	23	63	86	0	5	5	
	51	1.727.652.00	AUDIO REMOTE CTL. IF.	1	56	57	0	4	4	
	70	1.727.710.00	TIME CODE PROCESSOR	31	120	151	0	10	12	
	94	1.727.940.00	EXT. VU PANEL	0	41	41	0	1	3	
			DISTRIBUTED IN 38 GRP TOTAL :	103	1665	1768	0	101	191	

STUDER REVOX AG * ELEMENT SUMMARY * 91/07/18 * 17:00 * PAGE 3 *
1.807.060.00 * STUDER A 807 TAPE RECORDER 4 CH * * 91/07/10 - 00 *

GRP	ELM	PART NUMBER	DESCRIPTION		UNUSED PINS	USED PINS	TOT.PINS	MULT.PINS	COD.KEYS	REMARK
1	1		CONNECTOR POWER INPUT	P01	0	5	5	0	0	
1	2		CONN. GROUND		0	1	1	0	0	
1	3		SERIAL CTL. CONNECTOR		4	4	8	0	1	
1	4		TC REMOTE DISPLAY CONNECTOR		4	4	8	0	1	
1	5		NRS CONTROL CONNECTOR		4	10	14	0	1	
1	6		PARALLEL REMOTE CONNECTOR		0	24	24	0	1	
1	7		SYNCHRONIZER CONNECTOR		1	22	23	0	2	
1	8		CONN. EXT. VU PANEL, CTL		8	17	25	0	0	
1	9		CONN. EXT. VU PANEL, AUDIO		0	24	24	0	1	
1	10		AUDIO REMOTE CONTROL CONN.		2	13	15	0	0	
1	11		CONN. LINE OUTPUT, TC		0	3	3	0	0	
1	12		CONN. LINE INPUT, TC		0	3	3	0	0	
1	13		CONN. LINE OUTPUT, CH1		0	3	3	0	0	
1	14		CONN. LINE INPUT, CH1		0	3	3	0	0	
1	15		CONN. LINE OUTPUT, CH2		0	3	3	0	0	
1	16		CONN. LINE INPUT, CH2		0	3	3	0	0	
1	17		CONN. LINE OUTPUT, CH3		0	3	3	0	0	
1	18		CONN. LINE INPUT, CH3		0	3	3	0	0	
1	19		CONN. LINE OUTPUT, CH4		0	3	3	0	0	
1	20		CONN. LINE INPUT, CH4		0	3	3	0	0	
2	1		POWER SWITCH		0	4	4	0	0	
3	1		MAINS FILTER, INPUT		0	2	2	0	0	
3	2		MAINS FILTER, OUTPUT		0	2	2	0	0	
4	1		VOLTAGE SELECTOR		0	8	8	0	0	
5	1		PRIMARY	P01	0	9	9	0	0	
5	2		SECONDARY	P03	0	10	10	0	0	
6	1		CONN. TRANSFORMER	J01	0	12	12	0	1	
6	2		CONN. TO CHARGE CAPACITORS	J02	1	6	7	0	0	
6	3		CONN. FROM CHARGE CAPACITORS	J03	1	6	7	0	0	
6	4		CONN. TAPE DECK ELECTRONICS	J04	0	17	17	0	1	
6	5		CONN. RECTIFIER DZ2		0	2	2	0	0	
7	1		CHARGE CAPACITOR CHC1		0	2	2	0	0	
7	2		CHARGE CAPACITOR CHC2		0	2	2	0	0	
7	3		CHARGE CAPACITOR CHC3		0	2	2	0	0	
7	4		CHARGE CAPACITOR CHC4		0	2	2	0	0	
8	1		RECTIFIER DZ2		0	4	4	0	0	
10	1		CONNECTOR POWER SUPPLY	J01	0	9	9	0	1	
10	2		CONN. CAPSTAN CTL.	J02	0	13	13	0	2	
10	3		CONN. MOVE SENSOR	J03	0	4	4	0	1	
10	4		CONN. SERIAL CTL.	J04	0	4	4	0	1	
10	5		CONN. TAPE TRANSPARENT SENSOR	J05	0	4	4	0	1	
10	6		CONN. SPOOLING MOTOR CTL.	J06	0	19	19	0	1	

STUDER REVOX AG * ELEMENT SUMMARY * 91/07/18 * 17:00 * PAGE 4 *
1.807.060.00 * STUDER A 807 TAPE RECORDER 4 CH * * 91/07/10 - 00 *

GRP	ELM	PART NUMBER	DESCRIPTION		UNUSED PINS	USED PINS	TOT.PINS	MULT.PINS	COD.KEYS	REMARK
10	7		CONN. SOLENOIDS	J07	1	3	4	0	1	
10	8		CONN. EXT. VU-PANEL	J08	0	15	15	0	1	
10	9		CONN. COMMAND PANEL	J09	0	19	19	0	1	
10	10		CONN. AUDIO CTL.	J10	0	15	15	0	1	
10	11		CONN. PARALLEL REMOTE A	J11	0	15	15	0	1	
10	12		CONN. PARALLEL REMOTE B	J12	0	9	9	0	1	
10	13		CONN. SYNCHRONIZER A	J13	0	14	14	0	1	
10	14		CONN. SYNCHRONIZER B	J14	0	8	8	0	1	
10	15		CONN. GROUND (TP 12)		0	1	1	0	0	
10	16		CONN. TESTPOINT (TP 05)		0	1	1	0	0	
11	1		CONN. TAPE TENS. ADJUSTMENT	J01	0	8	8	0	1	
11	2		CONN. TAPE TENS. SENSOR	J02	0	4	4	0	1	
11	3		CONN. TAPE DECK CTL.	J03	0	19	19	0	1	
11	4		CONN. SP. MOTOR TACHO, RIGHT	J04	0	3	3	0	1	
11	5		CONN. SP. MOTOR TACHO, LEFT	J05	0	3	3	0	1	
11	6		CONN. SHUTTLE CTL.	J06	0	3	3	0	1	
11	7		CONN. SP. MOTOR FILTER, LEFT	J07	0	9	9	0	0	
11	8		CONN. SP. MOTOR FILTER, RIGHT	J08	0	7	7	0	0	
11	9		CONN. SP. MOTOR SUPPLY,	P1, P2	0	2	2	0	0	
12	1		CONN. SP. MOTOR CTL,	P01	0	9	9	0	0	
12	2		CONN. SP. MOTOR CTL,	P02	0	7	7	0	0	
12	3		CONN. SP. MOTOR LEFT	J01	0	3	3	0	0	
12	4		CONN. SP. MOTOR RIGHT	J02	0	3	3	0	0	
13	1		CONN. SP. MOTOR CTL, J02		0	4	4	0	1	
14	1		CONN. SP. MOTOR CTL, J01		0	8	8	0	0	
15	1		CONN. SP. MOTOR FILTER, J01		0	3	3	0	0	
16	1		CONN. SP. MOTOR FILTER, J01		0	3	3	0	0	
17	1		CONN. SP. MOTOR CTL, J05		0	3	3	0	0	
18	1		CONN. SP. MOTOR CTL, J04		0	3	3	0	0	
20	1		CONN. TAPE DECK CTL.	J01	0	13	13	0	1	
20	2		CONN. VARI SPEED CTL.	J02	0	3	3	0	1	
20	3		CONN. CAPSTAN TACHO	J03	0	11	11	0	1	
20	4		CONN. CAPSTAN MOTOR	J04	0	3	3	0	1	
20	5		CONN. CAPSTAN MOTOR SUPPLY	P1, P2	0	2	2	0	0	
21	1		CONN. CAPSTAN CTL, J04		0	3	3	0	1	
21	2		CONN. CAPSTAN CTL, J03		0	11	11	0	1	
24	1		CONN. TAPE DECK CTL. J03		0	4	4	0	1	
25	1		CONN. TAPE DECK CTL. J07		0	2	2	0	0	

```
*    STUDER REVOX AG   *   E L E M E N T    S U M M A R Y                    * 91/07/18 * 17:00 *  P A G E  5  *
*          1.807.060.00  * STUDER  A 807 TAPE RECORDER 4 CH *                 * 91/07/10 - 00                  *
```

GRP	ELM	PART NUMBER	DESCRIPTION		UNUSED PINS	USED PINS	TOT.PINS	MULT.PINS	COD.KEYS	REMARK
26	1		CONN. TAPE DECK CTL. J07		0	2	2	0	0	
27	1		CONN. TAPE DECK CTL. J07		0	2	2	0	0	
30	1		CONN. SPEED INDICATORS		0	3	3	0	0	
30	2		CONN. DISPLAY EL.		0	5	5	0	0	
30	3		CONN. TAPE DECK CTL. J10		0	19	19	0	1	
30	4		CONN. KEYS MATRIX		1	18	19	0	1	
30	5		CONN. VU-INPUT CH1		0	1	1	0	0	
30	6		CONN. VU-INPUT CH2		0	1	1	0	0	
30	7		SHUTTLE POTMETER		0	3	3	0	0	
31	1		CONN. COMMAND PANEL J01		0	3	3	0	0	
31	2		CONN. COMMAND PANEL J02		0	5	5	0	0	
35	7		VARIO SPEED POTM.		0	3	3	0	0	
36	1		CONN. HEAD PHONES		0	5	5	0	0	
36	2		CONN. MONITOR SWITCH		0	6	6	0	1	
37	1		MONITOR VOLUME POTM.		4	8	12	0	0	
37	2		LOUDSPEAKER		0	2	2	0	0	
39	1		CONN. AUDIO ELECTRONICS		0	38	38	0	0	
40	1		CONN. POWER SUPPLY	J01	0	8	8	0	1	
40	2		CONN. TAPE DECK ELECTRONICS	J02	6	13	19	0	1	
40	3		CONN. AUDIO CONTROL	J03	7	11	18	0	2	
40	4		CONN. AUDIO CONTROL	J04	2	16	18	0	2	
40	5		CONN. MONITOR	J05	2	17	19	0	1	
40	6		CONN. VU METER	J06	0	7	7	0	1	
40	11		CONN. AUDIO ELECTRONICS CH1		0	7	7	0	0	
40	12		CONN. AUDIO ELECTRONICS CH1		0	20	20	0	0	
40	13		CONN. AUDIO ELECTRONICS CH1		0	13	13	0	0	
40	14		CONN. AUDIO ELECTRONICS CH1		0	20	20	0	0	
40	15		CONN. INSERT, INPUT CIRCUIT	J15	0	16	16	0	1	
40	16		CONN. INSERT, OUTPUT CIRCUIT	J16	0	6	6	0	1	
40	21		CONN. AUDIO ELECTRONICS CH2		0	7	7	0	0	
40	22		CONN. AUDIO ELECTRONICS CH2		0	20	20	0	0	
40	23		CONN. AUDIO ELECTRONICS CH2		0	13	13	0	0	
40	24		CONN. AUDIO ELECTRONICS CH2		0	20	20	0	0	
40	31		CONN. AUDIO ELECTRONICS CH3		0	7	7	0	0	
40	32		CONN. AUDIO ELECTRONICS CH3		0	20	20	0	0	
40	33		CONN. AUDIO ELECTRONICS CH3		0	13	13	0	0	
40	34		CONN. AUDIO ELECTRONICS CH3		0	20	20	0	0	
40	35		CONN. INSERT, INPUT CIRCUIT	J35	0	16	16	0	1	
40	36		CONN. INSERT, OUTPUT CIRCUIT	J36	0	6	6	0	1	
40	41		CONN. AUDIO ELECTRONICS CH4		0	7	7	0	0	
40	42		CONN. AUDIO ELECTRONICS CH4		0	20	20	0	0	
40	43		CONN. AUDIO ELECTRONICS CH4		0	13	13	0	0	

```
*    STUDER REVOX AG   *   E L E M E N T    S U M M A R Y                    * 91/07/18 * 17:00 *  P A G E  6  *
*          1.807.060.00  * STUDER  A 807 TAPE RECORDER 4 CH *                 * 91/07/10 - 00                  *
```

GRP	ELM	PART NUMBER	DESCRIPTION	UNUSED PINS	USED PINS	TOT.PINS	MULT.PINS	COD.KEYS	REMARK
40	44		CONN. AUDIO ELECTRONICS CH1	0	20	20	0	0	
41	1		CONN. MIC LEVEL POT, CH1	0	3	3	0	1	
41	2		CONN. MIC AND LINE INPUTS, CH1	0	9	9	0	1	
41	3		CONN. LINE LEVEL POT, CH1	0	3	3	0	1	
41	4		CONN. HEAD BLOCK, RECORD	0	4	4	0	1	
41	5		CONN. HEAD BLOCK, REPRO	0	3	3	0	1	
41	6		CONN. OUTPUT LEVEL POT, CH1	0	3	3	0	1	
41	7		CONN. LINE OUTPUT CONNECTOR, CH1	0	3	3	0	1	
41	11		CONN. AUDIO CTL, J21	0	7	7	0	0	
41	12		CONN. AUDIO CTL, J22	0	20	20	0	0	
41	13		CONN. AUDIO CTL, J23	0	13	13	0	0	
41	14		CONN. AUDIO CTL, J24	0	20	20	0	0	
42	1		CONN. MIC LEVEL POT, CH2	0	3	3	0	1	
42	2		CONN. MIC AND LINE INPUTS, CH2	0	9	9	0	1	
42	3		CONN. LINE LEVEL POT, CH2	0	3	3	0	1	
42	4		CONN. HEAD BLOCK, RECORD	0	4	4	0	1	
42	5		CONN. HEAD BLOCK, REPRO	0	3	3	0	1	
42	6		CONN. OUTPUT LEVEL POT, CH2	0	3	3	0	1	
42	7		CONN. LINE OUTPUT CONNECTOR, CH2	0	3	3	0	1	
42	11		CONN. AUDIO CTL, J41	0	7	7	0	0	
42	12		CONN. AUDIO CTL, J42	0	20	20	0	0	
42	13		CONN. AUDIO CTL, J43	0	13	13	0	0	
42	14		CONN. AUDIO CTL, J44	0	20	20	0	0	
43	1		CONN. MIC LEVEL POT, CH3	0	3	3	0	1	
43	2		CONN. MIC AND LINE INPUTS, CH3	0	9	9	0	1	
43	3		CONN. LINE LEVEL POT, CH3	0	3	3	0	1	
43	4		CONN. HEAD BLOCK, RECORD	0	4	4	0	1	
43	5		CONN. HEAD BLOCK, REPRO	0	3	3	0	1	
43	6		CONN. OUTPUT LEVEL POT, CH3	0	3	3	0	1	
43	7		CONN. LINE OUTPUT CONNECTOR, CH3	0	3	3	0	1	
43	11		CONN. AUDIO CTL, J21	0	7	7	0	0	
43	12		CONN. AUDIO CTL, J22	0	20	20	0	0	
43	13		CONN. AUDIO CTL, J23	0	13	13	0	0	
43	14		CONN. AUDIO CTL, J24	0	20	20	0	0	
44	1		CONN. MIC LEVEL POT, CH4	0	3	3	0	1	
44	2		CONN. MIC AND LINE INPUTS, CH4	0	9	9	0	1	
44	3		CONN. LINE LEVEL POT, CH4	0	3	3	0	1	
44	4		CONN. HEAD BLOCK, RECORD	0	4	4	0	1	
44	5		CONN. HEAD BLOCK, REPRO	0	3	3	0	1	
44	6		CONN. OUTPUT LEVEL POT, CH4	0	3	3	0	1	
44	7		CONN. LINE OUTPUT CONNECTOR, CH4	0	3	3	0	1	
44	11		CONN. AUDIO CTL, J21	0	7	7	0	0	
44	12		CONN. AUDIO CTL, J22	0	20	20	0	0	
44	13		CONN. AUDIO CTL, J23	0	13	13	0	0	
44	14		CONN. AUDIO CTL, J24	0	20	20	0	0	

```
*    STUDER REVOX AG   *   E L E M E N T    S U M M A R Y                    * 91/07/18 * 17:00 *  P A G E  7  *
*          1.807.060.00  * STUDER  A 807 TAPE RECORDER 4 CH *                 * 91/07/10 - 00                  *
```

GRP	ELM	PART NUMBER	DESCRIPTION		UNUSED PINS	USED PINS	TOT.PINS	MULT.PINS	COD.KEYS	REMARK
47	1		CONN. TO AUDIO CONTROL J03		9	11	20	0	0	
47	2		CONN. TO AUDIO CONTROL J04		2	16	18	0	2	
47	3		CONN. NRS CONTROL J3		9	11	20	0	0	
47	4		CONN. NRS CONTROL J4		2	16	18	0	2	
47	5		CONN. NRS CONTROL J2		1	9	10	0	1	
51	1		AUDIO REMOTE CONTROL IF.		1	13	14	0	1	
51	9		CONN. COMMAND PANEL	J09	0	19	19	0	1	
51	11		CONN. PARALLEL REMOTE A	J11	0	15	15	0	1	
51	12		CONN. PARALLEL REMOTE B	J12	0	9	9	0	1	
70	1		TO HEAD BLOCK CONNECTOR	J01	0	6	6	0	1	
70	2		CONN. AUDIO CONTROL	J02	9	11	20	0	0	
70	3		CONN. AUDIO CONTROL	J03	2	16	18	0	2	
70	4		CONN. TAPE DECK SERIAL CTL.	J04	0	4	4	0	1	
70	5		CONN. RS 232	J05	0	4	4	0	1	
70	6		CONN. REMOTE DISPLAY	J06	0	4	4	0	1	
70	7		CONN. KEYBOARD CTL.	J07	0	3	3	0	2	
70	8		CONN. RES	J08	10	0	10	0	0	
70	9		CONN. TIME CODE INPUT/OUTPUT XLR	J09	0	6	6	0	1	
70	10		CONN. TIME CODE WRITE/READ UNIT	J10	0	20	20	0	0	
70	11		CONN. TIME CODE WRITE/READ UNIT	J11	5	13	18	0	0	
70	21		TIME CODE WRITE/READ UNIT		5	33	38	0	1	
94	1		CONN. VU PANEL, CTL		0	17	17	0	1	
94	3		CONN. VU PANEL, AUDIO		0	12	12	0	0	
94	4		CONN. VU PANEL, AUDIO		0	12	12	0	0	
			DISTRIBUTED IN 191 ELM	TOTAL :	103	1665	1768	0	101	

* STUDER REVOX AG * L O C A T I O N P I N L I S T * 91/07/18 * 17:00 * P A G E 8 *
* 1.807.060.00 * STUDER A 807 TAPE RECORDER 4 CH * * 91/07/10 - 00 *

GRP 1
CONNECTOR PANEL

ELM 1
CONNECTOR POWER INPUT P01

PNT	SIGNAL NAME	COLOR	LV TYPE	F
1	LINE1	1		
2	LINE2	6		
3	GND	5-4		
4	LINE1	1		
5	F-LINE1	1		

ELM 2
CONN. GROUND

PNT	SIGNAL NAME	COLOR	LV TYPE	F
1	GND			

ELM 3
SERIAL CTL. CONNECTOR

PNT	SIGNAL NAME	COLOR	LV TYPE	F
1				
2	SN-DATA	2		B
3				
4				
5	+24V-RMT	8		B
6	KEY			
7				
8	RCVDATA	1		B
9	+0.0V	0		B

ELM 4
TC REMOTE DISPLAY CONNECTOR

PNT	SIGNAL NAME	COLOR	LV TYPE	F
1				
2	TX-DSPLY	2		B
3	DSP-DTCT	3		B
4	KEY			
5	+24V-RMT	7		B
6				
7				
8				
9	+0.0V	0		B

./.

GRP 1 <-- <-- <-- CONTINUATION

ELM 5
NRS CONTROL CONNECTOR

PNT	SIGNAL NAME	COLOR	LV TYPE	F
1	B-DBY-01	1		B
2	B-DBY-02	2		B
3	B-DBY-03	3		B
4	B-DBY-04	4		B
5	B-TLC-01	5		B
6	B-TLC-02	6		B
7	B-TLC-03	7		B
8	B-TLC-04	8		B
9				B
10				B
11				B
12	KEY			B
13				B
14	+24.0V	7		B
15	+0.0VD	0		B

ELM 6
PARALLEL REMOTE CONNECTOR

PNT	SIGNAL NAME	COLOR	LV TYPE	F
1	+0.0V	8		B
2	BR-REW	3		B
3	BR-FORW	2		B
4	BR-VRSPD	6		B
5	SR-VRSPD	4		B
6	SR-FADRY	5		B
7	BR-LCCST	8		B
8	BR-FADRY	7		B
9	BR-REC	5		B
10	SR-RESET	5		B
11	FAD1	1		B
12	FAD2	2		B
13	IR-REFEX	3		B
14	SR-ZLOC	6		B
15	BR-PLAY	1		B
16	BR-STOP	4		B
17	SR-LIFT	7		B
18	SR-LCCST	6		B
19	SR-REC	3		B
20	SR-REW	1		B
21	SR-FORW	0		B
22	SR-PLAY	9		B
23	SR-STOP	2		B
24	KEY			
25	+24V-RMT	0		B

./.

GRP 1 <-- <-- <-- CONTINUATION

ELM 7
SYNCHRONIZER CONNECTOR

PNT	SIGNAL NAME	COLOR	LV TYPE	F
1	+0.0V	8		B
2	BR-REW	3		B
3	BR-FORW	2		B
4	BR-VRSPD	6		B
5	SR-VRSPD	4		B
6				
7	OR-MVCLK	5		B
8	KEY			
9	BR-REC	5		B
10	OR-MVDIR	6		B
11	OR-CMCLK	1		B
12	OR-SYENB	8		B
13	IR-REFEX	3		B
14	+0.0V	5		B
15	BR-PLAY	1		B
16	BR-STOP	4		B
17	SR-LIFT	7		B
18	SR-MUTE	4		B
19	SR-REC	3		B
20	SR-REW	1		B
21	SR-FORW	0		B
22	SR-PLAY	9		B
23	SR-STOP	2		B
24	KEY			
25	+24V-RMT	9		B

./.

* STUDER REVOX AG * L O C A T I O N P I N L I S T * 91/07/18 * 17:00 * P A G E 9 *
* 1.807.060.00 * STUDER A 807 TAPE RECORDER 4 CH * * 91/07/10 - 00 *
<-- <-- <-- CONTINUATION

GRP 1 <-- <-- <-- CONTINUATION

ELM 8
CONN. EXT. VU PANEL, CTL

PNT	SIGNAL NAME	COLOR	LV TYPE	F
1	+0.0VD	0		B
2	+5.6V	5		B
3	+15.0VB	2		B
4				B
5	EXT-D4	4		B
6	EXT-D5	5		B
7	EXT-D6	6		B
8	EXT-D7	7		B
9				B
10				B
11				B
12	A-MONIT1	1		B
13	A-MONIT2	2		B
14	+0.0VA	0		B
15				B
16	-15.0VB	6		B
17				B
18	EXT-DATA	8		B
19	EXT-CLK	7		B
20	EX-ENMTX	9		B
21	EX-ENLDA	5		B
22				B
23				B
24	A-MONIT3	3		B
25	A-MONIT4	4		B

./.

GRP 1 <-- <-- <-- CONTINUATION

ELM 9
CONN. EXT. VU PANEL, AUDIO

PNT	SIGNAL NAME	COLOR	LV TYPE	F
1	A-LVINA1	9		A
2	A-LVINB1	6		A
3	A-LVINC1	S		A
4	A LVCUA1	9		A
5	A-LVCUB1	6		A
6	A-LVCUC1	S		A
7	KEY			A
8	A-LVINA2	9		A
9	A-LVINB2	6		A
10	A-LVINC2	S		A
11	A LVCUA2	9		A
12	A-LVCUB2	6		A
13	A LVCUC2	S		A
14	A-LVINA3	9		A
15	A-LVINB3	6		A
16	A-LVINC3	S		A
17	A LVCUA3	9		A
18	A-LVCUB3	6		A
19	A-LVCUC3	S		A
20	A-LVINA4	9		A
21	A-LVINB4	6		A
22	A-LVINC4	S		A
23	A-LVCUA4	9		A
24	A LVCUB4	6		A
25	A-LVCUC4	S		A

ELM 10
AUDIO REMOTE CONTROL CONN.

PNT	SIGNAL NAME	COLOR	LV TYPE	F
1	+0.0VD	0		B
2	ARC-DATA	2		B
3	ARC-CLK	3		B
4	ARC-MXEN	4		B
5	ARC-LDEN	5		B
6	ARC-DPEN	6		B
7				
8	+0.0VD	0		B
9				
10	ARC-DO	9		B
11	ARC-D7	1		B
12	ARC-D6	2		B
13	ARC-D5	3		B
14	ARC-D4	4		B
15	+24V-RMT	7		B

GRP 1 <-- <-- <-- CONTINUATION

ELM 11
CONN. LINE OUTPUT, TC

PNT	SIGNAL NAME	COLOR	LV TYPE	F
1	TC-OUTS	S		
2	TC-OUTA	9		
3	TC-OUTB	6		

ELM 12
CONN. LINE INPUT, TC

PNT	SIGNAL NAME	COLOR	LV TYPE	F
1	TC-INS	S		
2	TC-INA	9		
3	TC-INB	6		

ELM 13
CONN. LINE OUTPUT, CH1

PNT	SIGNAL NAME	COLOR	LV TYPE	F
1	A-LOUTS1	S		
2	A-LOUTA1	2		
3	A-LOUTB1	3		

ELM 14
CONN. LINE INPUT, CH1

PNT	SIGNAL NAME	COLOR	LV TYPE	F
1	A-LINS1	S		
2	A-LINA1	9		
3	A-LINB1	6		

ELM 15
CONN. LINE OUTPUT, CH2

PNT	SIGNAL NAME	COLOR	LV TYPE	F
1	A-LOUTS2	S		
2	A-LOUTA2	2		
3	A-LOUTB2	3		

./.

* STUDER REVOX AG * L O C A T I O N P I N L I S T * 91/07/18 * 17:00 * P A G E 10 *
* 1.807.060.00 * STUDER A 807 TAPE RECORDER 4 CH * * 91/07/10 - 00 *
<-- <-- <-- CONTINUATION

GRP 1 <-- <-- <-- CONTINUATION

ELM 16
CONN. LINE INPUT, CH2

PNT	SIGNAL NAME	COLOR	LV TYPE	F
1	A-LINS2	S		
2	A-LINA2	9		
3	A-LINB2	6		

ELM 17
CONN. LINE OUTPUT, CH3

PNT	SIGNAL NAME	COLOR	LV TYPE	F
1	A-LOUTS3	S		
2	A-LOUTA3	2		
3	A-LOUTB3	3		

ELM 18
CONN. LINE INPUT, CH3

PNT	SIGNAL NAME	COLOR	LV TYPE	F
1	A-LINS3	S		
2	A-LINA3	9		
3	A-LINB3	6		

ELM 19
CONN. LINE OUTPUT, CH4

PNT	SIGNAL NAME	COLOR	LV TYPE	F
1	A-LOUTS4	S		
2	A-LOUTA4	2		
3	A-LOUTB4	3		

ELM 20
CONN. LINE INPUT, CH4

PNT	SIGNAL NAME	COLOR	LV TYPE	F
1	A-LINS4	S		
2	A-LINA4	9		
3	A-LINB4	6		

GRP 2 55.12.0001
POWER SWITCH

ELM 1
POWER SWITCH

PNT	SIGNAL NAME	COLOR	LV TYPE	F
1	F-LINE1	1		J
2	LINE2	6		J
3	S-LINE1	1		J
4	S-LINE2	6		J

GRP 3 89.01.0384
MAINS FILTER

ELM 1
MAINS FILTER, INPUT

PNT	SIGNAL NAME	COLOR	LV TYPE	F
1	S-LINE1	1		J
2	S-LINE2	6		J

ELM 2
MAINS FILTER, OUTPUT

PNT	SIGNAL NAME	COLOR	LV TYPE	F
1	SF-LINE1	1		J
2	SF-LINE2	6		J

* STUDER REVOX AG * L O C A T I O N P I N L I S T * 91/07/18 * 17:00 * P A G E 11 *
* 1.807.060.00 * STUDER A 807 TAPE RECORDER 4 CH * * 91/07/10 - 00 *
<-- <-- <-- CONTINUATION

GRP 4 53.03.0128
VOLTAGE SELECTOR

ELM 1
VOLTAGE SELECTOR

PNT	SIGNAL NAME	COLOR	LV TYPE	F
1	SF-LINE2	6-8		L
2	PRIMM-3	3		L
3	PRIMM-7	7		L
4A	PRIMM-4	4-4		L
4B	PRIMM-6	6-4		L
5	PRIMM-1	1		L
6	PRIMM-5	5		L
7	SF-LINE1	2-1		L

GRP 5 1.727.695.00
MAINS TRANSFORMER

ELM 1
PRIMARY P01

PNT	SIGNAL NAME	COLOR	LV TYPE	F
1	PRIMM-1	1		Y
2	SF-LINE1	2		Y
3	PRIMM-3	3		Y
4	PRIMM-4	4		Y
5	PRIMM-5	5		Y
6	PRIMM-6	6		Y
7	PRIMM-7	7		Y
8	SF-LINE2	8		Y
9	GND	0		Y

ELM 2
SECONDARY P03

PNT	SIGNAL NAME	COLOR	LV TYPE	F
1	ACA-30	1		L
2	ACA-18P	2		L
3	ACA-18N	3		L
4	ACA-20	4		L
5	ACA-40	5		L
6	ACB-40	6		L
7	ACB-20	7		L
8	ACB-18N	8		L
9	ACB-18P	9		L
10	ACB-30	0		L

GRP 6 1.727.691.00
RECTIFIER BOARD

ELM 1
CONN. TRANSFORMER J01

PNT	SIGNAL NAME	COLOR	LV TYPE	F
1	ACA-20	4		N
2	ACA-18P	2		N
3	ACA-18N	3		N
4	ACB-40	6		N
5	ACB-40			
6	KEY			
7	ACB-18N	8		N
8	ACB-18P	9		N
9	ACB-20	7		N
10	ACB-30	0		N
11	ACA-40	5		N
12	ACA-40			
13	ACA-30	1		N

ELM 2
CONN. TO CHARGE CAPACITORS J02

PNT	SIGNAL NAME	COLOR	LV TYPE	F
1	CHC2-N	8		N
2	CHC3-N	3		N
3	CHC4-P	4		N
4	CHC2-P	7		N
5	CHC3-P	2		N
6				N
7	CHC4-N	6		N

ELM 3
CONN. FROM CHARGE CAPACITORS J03

PNT	SIGNAL NAME	COLOR	LV TYPE	F
1	CHC4-P	4		N
2	CHC3-N	3		N
3				N
4	CHC2-N	8		N
5	CHC4-N	6		N
6	CHC3-P	2		N
7	CHC2-P	7		L

STUDER REVOX AG * L O C A T I O N P I N L I S T * 91/07/18 * 17:00 * P A G E 12
1.807.060.00 * STUDER A 807 TAPE RECORDER 4 CH * * 91/07/10 - 00

<-- <-- <-- CONTINUATION

GRP 6 1.727.691.00
<-- <-- <-- CONTINUATION

ELM 4
CONN. TAPE DECK ELECTRONICS J04

PNT	SIGNAL NAME	COLOR LV	TYPE	F
1	+20.0V			
2	+60.0V	5	N	
3	17VAC	3	N	
4	+24V-RMT	8	N	
5	KEY			
6	+24.0V		N	
7	+24.0V		N	
8	+24.0V	7	N	
9	+24.0V	7	N	
10	+24.0V	7	N	
11	+24.0V	7	N	
12	+24.0V	7	N	
13	+24.0V	7	N	
14	+20.0V	2	N	
15	-20.0V	6	N	
16	+0.0V	1	N	
17	+0.0V	4	N	
18	+0.0V	0	N	

ELM 5
CONN. RECTIFIER DZ2

PNT	SIGNAL NAME	COLOR LV	TYPE	F
1	F-ACB40	8	Y	
2	F-ACA40	1	Y	

GRP 7
CHARGE CAPACITORS

ELM 1
CHARGE CAPACITOR CHC1

PNT	SIGNAL NAME	COLOR LV	TYPE	F
1	+50.0V	2	L	
2	0-MSPLY	0	L	

ELM 2
CHARGE CAPACITOR CHC2

PNT	SIGNAL NAME	COLOR LV	TYPE	F
1	CHC2-P	7	L	
2	CHC2-N	8	L	

ELM 3
CHARGE CAPACITOR CHC3

PNT	SIGNAL NAME	COLOR LV	TYPE	F
1	CHC3-P	2	L	
2	CHC3-N	3	L	

ELM 4
CHARGE CAPACITOR CHC4

PNT	SIGNAL NAME	COLOR LV	TYPE	F
1	CHC4-P	4	L	
2	CHC4-N	6	L	

GRP 8 70.01.0231
RECTIFIER DZ2

ELM 1
RECTIFIER DZ2

PNT	SIGNAL NAME	COLOR LV	TYPE	F
1	F-ACA40	1	J	
2	F-ACB40	8	J	
3	+50.0V	2	J	
4	0-MSPLY	0	J	

STUDER REVOX AG * L O C A T I O N P I N L I S T * 91/07/18 * 17:00 * P A G E 13
1.807.060.00 * STUDER A 807 TAPE RECORDER 4 CH * * 91/07/10 - 00

<-- <-- <-- CONTINUATION

GRP 10 1.727.650.20
TAPE DECK ELECTRONICS

ELM 1
CONNECTOR POWER SUPPLY J01

PNT	SIGNAL NAME	COLOR LV	TYPE	F
1	17VAC	3	C	
2	KEY		C	
3	+24V-RMT	8	C	
4	-20.0V	6	C	
5	+0.0V	0	C	
6	+20.0V	2	C	
7	+0.0V	4	C	
8	+60.0V	5	C	
9	+0.0V	1	C	
10	+24.0V	7	C	

ELM 2
CONN. CAPSTAN CTL. J02

PNT	SIGNAL NAME	COLOR LV	TYPE	F
1	M3-C76K	1	N	
2	M3-9600	2	N	
3	M3-EN	3	N	
4	M3-CLK	4	N	
5	M3-DATA	5	N	
6	M3-TACHO	6	N	
7	M3-SYNC	7	N	
8	M3-REFEX	8	N	
9	KEY			
10	KEY			
11	-15.0V	6	N	
12	+15.0V	2	N	
13	+0.0VA	0	N	
14	+0.0VD	0	N	
15	+5.6V	5	N	

ELM 3
CONN. MOVE SENSOR J03

PNT	SIGNAL NAME	COLOR LV	TYPE	F
1	0-MOVES	0	N	
2	+5.0V	5	N	
3	MV-CLK2	2	N	
4	KEY			
5	MV-CLK1	1	N	

GRP 10 1.727.650.20
<-- <-- <-- CONTINUATION

ELM 4
CONN. SERIAL CTL. J04

PNT	SIGNAL NAME	COLOR LV	TYPE	F
1	RCVDATA	1	N	
2	KEY			
3	+0.0V	0	B	
4	+24V-RMT	8	B	
5	SN-DATA	2	B	

ELM 5
CONN. TAPE TRANSPARENT SENSOR J05

PNT	SIGNAL NAME	COLOR LV	TYPE	F
1	TRS-K	2	N	
2	TRS-A	3	N	
3	KEY		N	
4	TRS-C	4	N	
5	TRS-E	5	N	

ELM 6
CONN. SPOOLING MOTOR CTL. J06

PNT	SIGNAL NAME	COLOR LV	TYPE	F
1	MS-C76K	1	N	
2	MS-PRESS	2	N	
3	MS-SHUTL	3	N	
4	MS-REW	4	N	
5	MS-DIREN	5	N	
6	MS-ON	6	N	
7	MS-REFB	7	N	
8	MS-REFA	8	N	
9	S-TAPOUT	9	N	
10	M2-REFAN	0	N	
11	M1-TACHO	1	N	
12	M2-TACHO	2	N	
13	MS-MVDIR	3	N	
14	MS-MVCLK	4	N	
15	KEY			
16	+5.6V	5	N	
17	+0.0VD	0	N	
18	+0.0VA	0	N	
19	-15.0V	6	N	
20	+15.0V	2	N	

GRP 10 1.727.650.20
<-- <-- <-- CONTINUATION

ELM 7
CONN. SOLENOIDS J07

PNT	SIGNAL NAME	COLOR LV	TYPE	F
1	K-BRAKE	1	N	
2				
3	K-LIFT	8	N	
4	KEY			
5	K-PRESS	9	N	

ELM 8
CONN. EXT. VU-PANEL J08

PNT	SIGNAL NAME	COLOR LV	TYPE	F
1	EXT-FAD		N	
2	KEY			
3	EXT-D7	7	N	
4	EXT-D6	6	N	
5	EXT-D5	5	N	
6	EXT-D4	4	N	
7	EXT-DATA	8	N	
8	EXT-CLK	7	N	
9	EX-ENLDT		N	
10	+15.0V		N	
11	-15.0V		N	
12	+0.0VA		N	
13	+5.6V	3	N	
14	+0.0VD	0	N	
15	EX-ENMTX	9	N	
16	EX-ENLDA	5	N	

./.

```
*****************************************************************************************************************************
*   STUDER REVOX AG   *   L O C A T I O N   P I N   L I S T   * 91/07/18 * 17:00 *  P A G E  14  *
*****************************************************************************************************************************
*            1.807.060.00  * STUDER  A 807 TAPE RECORDER 4 CH *  91/07/10 - 00                                              *
*****************************************************************************************************************************
                                                                                                  <--  <--  <--  CONTINUATION
```

GRP 10 1.727.650.20 <-- <-- <-- CONTINUATION

ELM 9 — CONN. COMMAND PANEL — J09

PNT	SIGNAL NAME	COLOR LV	TYPE	F
1	SM-D7	1	N	
2	SM-D6	2	N	
3	SM-D5	3	N	
4	SM-D4	4	N	
5	SM-D3	5	N	
6	SM-D2	6	N	
7	SM-D1	7	N	
8	SM-D0	8	N	
9	DS-DATA	9	N	
10	DS-CLK	9	N	
11	DS-ENDPL	1	N	
12	DS-ENLDT	2	N	
13	KEY			
14	+15.0V	2	N	
15	-15.0V	6	N	
16	+0.0VA	0	N	
17	+5.6V	5	N	
18	+0.0VD	0	N	
19	DS-ENMTX	9	N	
20	DS-ENLDA	2	N	

ELM 10 — CONN. AUDIO CTL. — J10

PNT	SIGNAL NAME	COLOR LV	TYPE	F
1	AS-FAD	1	N	
2	KEY			
3	AS-WREN	3	N	
4	AS-STRAB	4	N	
5	AS-STR	5	N	
6	AS-CLK	6	N	
7	AS-DATA	7	N	
8	AS-HFCLK	8	N	
9	AS-RESET	9	N	
10	+5.6V	5	N	
11	+0.0VD	0	N	
12	+48.0V	7	N	
13	+0.0VA	0	N	
14	+15.0V	2	N	
15	-15.0V	6	N	
16	AS-STREC	4	N	

./.

GRP 10 1.727.650.20 <-- <-- <-- CONTINUATION

ELM 11 — CONN. PARALLEL REMOTE A — J11

PNT	SIGNAL NAME	COLOR LV	TYPE	F
1	FAD1	1	N	
2	FAD2	2	N	
3	IR-REFEX	3	N	
4	KEY			
5	SR-FADRY	5	N	
6	SR-LOCST	6	N	
7	SR-LIFT	7	N	
8	+0.0V	8	N	
9	SR-PLAY	9	N	
10	SR-FORW	0	N	
11	SR-REW	1	N	
12	SR-STOP	2	N	
13	SR-REC	3	N	
14	SR-VRSPD	4	N	
15	SR-RESET	5	N	
16	SR-ZLOC	6	N	

ELM 12 — CONN. PARALLEL REMOTE B — J12

PNT	SIGNAL NAME	COLOR LV	TYPE	F
1	BR-PLAY	1	N	
2	BR-FORW	2	N	
3	BR-REW	3	N	
4	BR-STOP	4	N	
5	BR-REC	5	N	
6	BR-VRSPD	6	N	
7	BR-FADRY	7	N	
8	BR-LOCST	8	N	
9	KEY			
10	+24V-RMT	0	N	

./.

GRP 10 1.727.650.20 <-- <-- <-- CONTINUATION

ELM 13 — CONN. SYNCHRONIZER A — J13

PNT	SIGNAL NAME	COLOR LV	TYPE	F
1	OR-CMCLK	1	N	
2	KEY			
3	IR-REFEX	3	N	
4	SR-MUTE	4	N	
5	OR-MVCLK	5	N	
6	OR-MVDIR	6	N	
7	SR-LIFT	7	N	
8	+0.0V	8	N	
9	SR-PLAY	9	N	
10	SR-FORW	0	N	
11	SR-REW	1	N	
12	SR-STOP	2	N	
13	SR-REC	3	N	
14	SR-VRSPD	4	N	
15	+0.0V	5	N	

ELM 14 — CONN. SYNCHRONIZER B — J14

PNT	SIGNAL NAME	COLOR LV	TYPE	F
1	BR-PLAY	1	N	
2	BR-FORW	2	N	
3	BR-REW	3	N	
4	BR-STOP	4	N	
5	BR-REC	5	N	
6	BR-VRSPD	6	N	
7	KEY		N	
8	OR-SYENB	8	N	
9	+24V-RMT	9	N	

ELM 15 — CONN. GROUND (TP 12)

PNT	SIGNAL NAME	COLOR LV	TYPE	F
1	GND		Y	

ELM 16 — CONN. TESTPOINT (TP 05)

PNT	SIGNAL NAME	COLOR LV	TYPE	F
1	MV-CLK1	0	Y	

```
*****************************************************************************************************************************
*   STUDER REVOX AG   *   L O C A T I O N   P I N   L I S T   * 91/07/18 * 17:00 *  P A G E  15  *
*****************************************************************************************************************************
*            1.807.060.00  * STUDER  A 807 TAPE RECORDER 4 CH *  91/07/10 - 00                                              *
*****************************************************************************************************************************
                                                                                                  <--  <--  <--  CONTINUATION
```

GRP 11 1.727.340.21 SPOOLING MOTOR CONTROL

ELM 1 — CONN. TAPE TENS. ADJUSTMENT — J01

PNT	SIGNAL NAME	COLOR LV	TYPE	F
1	0-TTA	1	N	
2	KEY		N	
3	TTA-LIBR	3	N	
4	TTA-PLAY	4	N	
5	TTA-REW	5	N	
6	TTA-FORW	6	N	
7	TTA-SHT1	7	N	
8	TTA-SHT2	8	N	
9	TTA-SHT3	9	N	

ELM 2 — CONN. TAPE TENS. SENSOR — J02

PNT	SIGNAL NAME	COLOR LV	TYPE	F
1	0-TTS	0	N	
2	KEY			
3	-15.0V	6	N	
4	AN-TTENS	9	N	
5	+15.0V	2	N	

./.

GRP 11 1.727.340.21 <-- <-- <-- CONTINUATION

ELM 3 — CONN. TAPE DECK CTL. — J03

PNT	SIGNAL NAME	COLOR LV	TYPE	F
1	MS-PRESS	2	N	
2	MS-MVCLK	4	N	
3	S-TAPOUT	9	N	
4	KEY			
5	MS-MVDIR	3	N	
6	MS-C76K	1	N	
7	M2-TACHO	2	N	
8	M1-TACHO	1	N	
9	MS-REFA	8	N	
10	-15.0V	6	N	
11	MS-REFB	7	N	
12	+0.0VA	0	N	
13	MS-DIREN	5	N	
14	M2-REFAN	0	N	
15	MS-ON	6	N	
16	+15.0V	2	N	
17	MS-REW	4	N	
18	+0.0VD	0	N	
19	+5.6V	5	N	
20	MS-SHUTL	3	N	

ELM 4 — CONN. SP. MOTOR TACHO, RIGHT — J04

PNT	SIGNAL NAME	COLOR LV	TYPE	F
1	0-TACH2	0	N	
2	+5.0V	5	N	
3	KEY			
4	M2-TSENS	4	N	

ELM 5 — CONN. SP. MOTOR TACHO, LEFT — J05

PNT	SIGNAL NAME	COLOR LV	TYPE	F
1	0-TACH1	0	N	
2	KEY			
3	+5.0V	5	N	
4	M1-TSENS	4	N	

./.

GRP 11 1.727.340.21 <-- <-- <-- CONTINUATION

ELM 6 — CONN. SHUTTLE CTL. — J06

PNT	SIGNAL NAME	COLOR LV	TYPE	F
1	R-SHUTL1	1	N	
2	R-SHUTL2	2	N	
3	KEY			
4	R-SHUTL3	3	N	

ELM 7 — CONN. SP. MOTOR FILTER, LEFT — J07

PNT	SIGNAL NAME	COLOR LV	TYPE	F
1	0-MOTFL		N	
2	M1-R		N	
3	M1-R		N	
4	M1-S		N	
5	M1-S		N	
6	+5.0VMF		N	
7	C-MOTFLT		N	
8	M1-T		N	
9	M1-T		N	

ELM 8 — CONN. SP. MOTOR FILTER, RIGHT — J08

PNT	SIGNAL NAME	COLOR LV	TYPE	F
1	M2-R		N	
2	M2-R		N	
3	M2-S		N	
4	M2-S		N	
5	M2-T		N	
6	M2-T		N	
7	0-MOTFL		N	

ELM 9 — CONN. SP. MOTOR SUPPLY, — P1, P2

PNT	SIGNAL NAME	COLOR LV	TYPE	F
1	+50.0V	2	Y	
2	0-MSPLY	0	Y	

```
*****************************************************************************************************************************
*   STUDER REVOX AG   *   L O C A T I O N   P I N   L I S T                  *  91/07/18  *  17:00  *   P A G E  16   *
*****************************************************************************************************************************
*            1.807.060.00  * STUDER  A 807 TAPE RECORDER 4 CH *                 *  91/07/10 - 00                          *
*****************************************************************************************************************************
                                                                                                  <--  <--  <--  CONTINUATION
```

GRP 12 1.727.342.00
SP. MOTOR FILTER

ELM 1
CONN. SP. MOTOR CTL, P01

PNT	SIGNAL NAME	COLOR LV	TYPE	F
1	0-MOTFL		N	
2	M1-R		N	
3	M1-R		N	
4	M1-S		N	
5	M1-S		N	
6	+5.0VMF		N	
7	C-MOTFLT		N	
8	M1-T		N	
9	M1-T		N	

ELM 2
CONN. SP. MOTOR CTL, P02

PNT	SIGNAL NAME	COLOR LV	TYPE	F
1	M2-R		N	
2	M2-R		N	
3	M2-S		N	
4	M2-S		N	
5	M2-T		N	
6	M2-T		N	
7	0-MOTFL		N	

ELM 3
CONN. SP. MOTOR LEFT J01

PNT	SIGNAL NAME	COLOR LV	TYPE	F
1	M1-R	2		
2	M1-S	9		
3	M1-T	6		

ELM 4
CONN. SP. MOTOR RIGHT J02

PNT	SIGNAL NAME	COLOR LV	TYPE	F
1	M2-R	2		
2	M2-S	9		
3	M2-T	6		

GRP 13 1.727.320.00
TAPE TENSION SENSOR

ELM 1
CONN. SP. MOTOR CTL, J02

PNT	SIGNAL NAME	COLOR LV	TYPE	F
1	0-TTS	0	N	
2	KEY			
3	+15.0V	2	N	
4	-15.0V	6	N	
5	AN-TTENS	9	N	

GRP 14 1.727.341.00
TAPE TENS. ADJUSTMENT

ELM 1
CONN. SP. MOTOR CTL, J01

PNT	SIGNAL NAME	COLOR LV	TYPE	F
1	TTA-SHT1	7	N	
2	TTA-SHT2	8	N	
3	TTA-SHT3	9	N	
4	TTA-LIBR	3	N	
6	TTA-REW	5	N	
8	TTA-FORW	6	N	
10	TTA-PLAY	4	N	
11	0-TTA	1	N	

```
*****************************************************************************************************************************
*   STUDER REVOX AG   *   L O C A T I O N   P I N   L I S T                  *  91/07/18  *  17:00  *   P A G E  17   *
*****************************************************************************************************************************
*            1.807.060.00  * STUDER  A 807 TAPE RECORDER 4 CH *                 *  91/07/10 - 00                          *
*****************************************************************************************************************************
                                                                                                  <--  <--  <--  CONTINUATION
```

GRP 15 1.021.260.00
SPOOLING MOTOR, LEFT

ELM 1
CONN. SP. MOTOR FILTER, J01

PNT	SIGNAL NAME	COLOR LV	TYPE	F
1	M1-R	2		
2	M1-S	9		
3	M1-T	6		

GRP 16 1.021.260.00
SPOOLING MOTOR, RIGHT

ELM 1
CONN. SP. MOTOR FILTER, J01

PNT	SIGNAL NAME	COLOR LV	TYPE	F
1	M2-R	2		
2	M2-S	9		
3	M2-T	6		

GRP 17 1.727.317.00
SP. MOTOR TACHO, LEFT

ELM 1
CONN. SP. MOTOR CTL, J05

PNT	SIGNAL NAME	COLOR LV	TYPE	F
1	0-TACH1	0	N	
2	+5.0V	5	N	
3	M1-TSENS	4	N	

STUDER REVOX AG * L O C A T I O N P I N L I S T * 91/07/18 * 17:00 * P A G E 18 *
1.807.060.00 * STUDER A 807 TAPE RECORDER 4 CH * * 91/07/10 - 00 *
<-- <-- <-- CONTINUATION

GRP 18 1.727.318.00
SP. MOTOR TACHO, RIGHT

ELM 1
CONN. SP. MOTOR CTL, J04

PNT	SIGNAL NAME	COLOR	LV	TYPE	F
1	0-TACH2	0		N	
2	+5.0V	5		N	
3	M2-TSENS	4		N	

GRP 20 1.727.335.20
CAPSTAN MOTOR CONTROL

ELM 1
CONN. TAPE DECK CTL. J01

PNT	SIGNAL NAME	COLOR	LV	TYPE	F
1	M3-CLK	4		N	
2	M3-DATA	5		N	
3	M3-EN	3		N	
4	M3-C76K	1		N	
5	M3-SYNC	7		N	
6	+5.6V	5		N	
7	+0.0VD	0		N	
8	+15.0V	2		N	
9	+0.0VA	0		N	
10	-15.0V	6		N	
11	KEY				
12	M3-9600	2		N	
13	M3-REFEX	8		N	
14	M3-TACHO	6		N	

ELM 2
CONN. VARI SPEED CTL. J02

PNT	SIGNAL NAME	COLOR	LV	TYPE	F
1	+0.0V	0		N	
2	KEY				
3	R-VRSPD	8		N	
4	+15.0V	2		N	

ELM 3
CONN. CAPSTAN TACHO J03

PNT	SIGNAL NAME	COLOR	LV	TYPE	F
1	TACHO-3A	1		N	
2	TACHO-3B	9		N	
3	KEY			N	
4	HALL1A	7		N	
5	HALL1B	8		N	
6	HALL2A	5		N	
7	HALL2B	6		N	
8	HALL3A	3		N	
9	HALL3B	4		N	
10	+0.0V	0		N	
11	+1.2V	2		N	
12	CAP-GRD				

GRP 20 1.727.335.20
<-- <-- <-- CONTINUATION

ELM 4
CONN. CAPSTAN MOTOR J04

PNT	SIGNAL NAME	COLOR	LV	TYPE	F
1	M3-R	9		N	
2	KEY			N	
3	M3-S	2		N	
4	M3-T	0		N	

ELM 5
CONN. CAPSTAN MOTOR SUPPLY P1, P2

PNT	SIGNAL NAME	COLOR	LV	TYPE	F
1	+50.0V	2		Y	
2	0-MSPLY	0		Y	

STUDER REVOX AG * L O C A T I O N P I N L I S T * 91/07/18 * 17:00 * P A G E 19 *
1.807.060.00 * STUDER A 807 TAPE RECORDER 4 CH * * 91/07/10 - 00 *
<-- <-- <-- CONTINUATION

GRP 21 1.021.605.00
CAPSTAN MOTOR

ELM 1
CONN. CAPSTAN CTL, J04

PNT	SIGNAL NAME	COLOR	LV	TYPE	F
1	M3-R	9		N	
2	KEY			N	
3	M3-S	2		N	
4	M3-T	0		N	

ELM 2
CONN. CAPSTAN CTL, J03

PNT	SIGNAL NAME	COLOR	LV	TYPE	F
1	TACHO-3A	1		N	
2	TACHO-3B	9		N	
3	KEY			N	
4	HALL1A	7		N	
5	HALL1B	8		N	
6	HALL2A	5		N	
7	HALL2B	6		N	
8	HALL3A	3		N	
9	HALL3B	4		N	
10	+1.2V	0		N	
11	+0.0V	2		N	
12	CAP-GRD				

GRP 24 1.727.321.00
TAPE MOVE SENSOR

ELM 1
CONN. TAPE DECK CTL. J03

PNT	SIGNAL NAME	COLOR	LV	TYPE	F
1	MV-CLK2	2		N	
2	0-MOVES	0		N	
3	MV-CLK1	1		N	
4	KEY				
5	+5.0V	5		N	

GRP 25 1.177.180.81
BRAKE CHASSIS

ELM 1
CONN. TAPE DECK CTL. J07

PNT	SIGNAL NAME	COLOR	LV	TYPE	F
1	K-BRAKE	1		X	
2	+24.0V	7		X	

STUDER REVOX AG * L O C A T I O N P I N L I S T * 91/07/18 * 17:00 * P A G E 20
1.807.060.00 * STUDER A 807 TAPE RECORDER 4 CH * * 91/07/10 - 00
<-- <-- <-- CONTINUATION

GRP 26 1.727.135.81
PRESS SOLENOID

ELM 1
CONN. TAPE DECK CTL. J07

PNT	SIGNAL NAME	COLOR LV	TYPE	F
1	+24.0V	7	X	
2	K-PRESS	9	X	

GRP 27 1.014.718.00
TAPE LIFT SOLENOID

ELM 1
CONN. TAPE DECK CTL. J07

PNT	SIGNAL NAME	COLOR LV	TYPE	F
1	+24.0V	7	X	
2	K-LIFT	8	X	

GRP 30 1.727.662.00
COMMAND PANEL

ELM 1
CONN. SPEED INDICATORS

PNT	SIGNAL NAME	COLOR LV	TYPE	F
1	B-FAST		N	
2	B-MID		N	
3	B-SLOW		N	

ELM 2
CONN. DISPLAY EL.

PNT	SIGNAL NAME	COLOR LV	TYPE	F
1	+0.0VD		N	
2	DS-ENDPL		N	
3	DS-CLK		N	
4	DS-DATA		N	
5	+5.6V		N	

ELM 3
CONN. TAPE DECK CTL. J10

PNT	SIGNAL NAME	COLOR LV	TYPE	F
1	SM-D0	8	D	
2	SM-D1	7	D	
3	SM-D2	6	D	
4	SM-D3	5	D	
5	SM-D4	4	D	
6	SM-D5	3	D	
7	SM-D6	2	D	
8	SM-D7	1	D	
9	DS-DATA	9	D	
10	DS-CLK	9	D	
11	DS-ENDPL	1	D	
12	DS-ENMTX	9	D	
13	DS-ENLDT	2	D	
14	DS-ENLDA	2	D	
15	KEY		D	
16	+0.0VD	0	D	
17	+5.6V	5	D	
18	+15.0V	2	D	
19	+0.0VA	0	D	
20	-15.0V	6	D	

STUDER REVOX AG * L O C A T I O N P I N L I S T * 91/07/18 * 17:00 * P A G E 21
1.807.060.00 * STUDER A 807 TAPE RECORDER 4 CH * * 91/07/10 - 00
<-- <-- <-- CONTINUATION

GRP 30 1.727.662.00
<-- <-- <-- CONTINUATION

ELM 4
CONN. KEYS MATRIX

PNT	SIGNAL NAME	COLOR LV	TYPE	F
1	SM-D0	0	N	
2	SM-D1		N	
3	SM-D2		N	
4	SM-D3		N	
5	SM-D4		N	
6	SM-D5		N	
7	SM-D6		N	
8	SM-D7		N	
9	MRX-A		N	
10	MRX-B		N	
11	MRX-C		N	
12	MRX-D		N	
13	MRX-E	3	N	
14	MRX-F	4	N	
15	MRX-G		N	
16	MRX-H		N	
17			N	
18	KEY		N	
19	+0.0VD		N	
20	+5.6V		N	

ELM 5
CONN. VU-INPUT CH1

PNT	SIGNAL NAME	COLOR LV	TYPE	F
1	A-VUMTR1	1	Y	

ELM 6
CONN. VU-INPUT CH2

PNT	SIGNAL NAME	COLOR LV	TYPE	F
1	A-VUMTR2	1	Y	

ELM 7
SHUTTLE POTMETER

PNT	SIGNAL NAME	COLOR LV	TYPE	F
1	R-SHUTL1	1	L	
2	R-SHUTL2	2	L	
3	R-SHUTL3	3	L	

GRP 31 1.727.370.00
DISPLAY BOARD

ELM 1
CONN. COMMAND PANEL J01

PNT	SIGNAL NAME	COLOR LV	TYPE	F
1	B-FAST		N	
2	B-MID		N	
3	B-SLOW		N	

ELM 2
CONN. COMMAND PANEL J02

PNT	SIGNAL NAME	COLOR LV	TYPE	F
1	+0.0VD		N	
2	DS-ENDPL		N	
3	DS-CLK		N	
4	DS-DATA		N	
5	+5.6V		N	

GRP 35
LEVEL CONTROL PANEL

ELM 7
VARIO SPEED POTM.

PNT	SIGNAL NAME	COLOR LV	TYPE	F
1	+0.0V	0	L	
2	R-VRSPD	8	L	
3	+15.0V	2	L	

```
*****************************************************************************************************************
*    STUDER REVOX AG   *    L O C A T I O N     P I N     L I S T          * 91/07/18 * 17:00 *   P A G E  22   *
*****************************************************************************************************************
*            1.807.060.00  * STUDER  A 807 TAPE RECORDER 4 CH *            * 91/07/10 - 00                       *
*****************************************************************************************************************
                                                                                          <--  <--  <--  CONTINUATION
```

GRP 36 54.24.0103
PHONES CONNECTOR

ELM 1
CONN. HEAD PHONES

PNT	SIGNAL NAME	COLOR LV	TYPE	F
1	+0.0VA	0	L	
2	A-LSAMP2	8	L	
3	A-PHOUT2	6	L	
4	A-PHOUT1	9	L	
5	A-LSAMP1	3	L	

ELM 2
CONN. MONITOR SWITCH

PNT	SIGNAL NAME	COLOR LV	TYPE	F
1	+0.0VA	0	N	
2	C-MONIT1	4	N	
3	KEY		N	
4	C-MONIT2	2	N	
5	C-MONIT3	1	N	
6	C-MONIT4	5	N	
7	+5.0VA	2	N	

GRP 37 1.727.120.00
MONITOR

ELM 1
MONITOR VOLUME POTM.

PNT	SIGNAL NAME	COLOR LV	TYPE	F
1	+0.0VA		L	
2	A-PHIN2	1	L	
3	A-MONIT	7	L	
4	+0.0VA	0	L	
5	A-PHIN1	8	L	
6	A-MONIT		L	
7	+0.0VA		L	
8	C-I/O	3	L	
9			L	
10			L	
11			L	
12			L	

ELM 2
LOUDSPEAKER

PNT	SIGNAL NAME	COLOR LV	TYPE	F
1	A-LSB	6	L	
2	A-LSA	7	L	

GRP 39 1.050.382.00
HEAD BLOCK ASSEMBLY

ELM 1
CONN. AUDIO ELECTRONICS

PNT	SIGNAL NAME	COLOR LV	TYPE	F
1	RECHH-TC	9	R	
2	RECHL-TC	6	R	
4	REPHL-01	6	R	
5	REPHH-01	9	R	
6	REPHH-02	9	R	
7	REPHL-02	6	R	
9	RECHH-01	8	R	
10	RECHH-02	1	R	
11	RECHH-03	8	R	
12	ERAHH-01	1	R	
13	ERAHH-02	3	R	
14	ERAHH-03	1	R	
15	TRS-A	3	R	
16	RECSC-TC	S	R	
17	ERASC-TC	S	R	
19	REPSC-01	S	R	
20	REPSC-03	S	R	
21	REPSC-02	S	R	
22	REPSC-04	S	R	
24	RECHL-01	7	R	
25	RECHL-02	0	R	
26	RECHL-03	7	R	
27	ERAHL-01	9	R	
28	ERAHL-02	2	R	
29	ERAHL-03	9	R	
30	TRS-K	2	R	
31	ERAHH-TC	9	R	
32	ERAHL-TC	6	R	
34	REPHL-03	6	R	
35	REPHH-03	9	R	
36	REPHH-04	9	R	
37	REPHL-04	6	R	
39	RECHL-04	7	R	
40	RECHH-04	8	R	
41	ERAHL-04	9	R	
42	ERAHH-04	1	R	
43	TRS-C	4	R	
44	TRS-E	5	R	

```
*****************************************************************************************************************
*    STUDER REVOX AG   *    L O C A T I O N     P I N     L I S T          * 91/07/18 * 17:00 *   P A G E  23   *
*****************************************************************************************************************
*            1.807.060.00  * STUDER  A 807 TAPE RECORDER 4 CH *            * 91/07/10 - 00                       *
*****************************************************************************************************************
                                                                                          <--  <--  <--  CONTINUATION
```

GRP 40 1.727.681.00
AUDIO CONTROL BOARD

ELM 1
CONN. POWER SUPPLY J01

PNT	SIGNAL NAME	COLOR LV	TYPE	F
1	CHC3-P	2	N	
2	CHC3-P	2	N	
3	CHC3-N	3	N	
4	CHC4-P		N	
5	CHC3-N		N	
6	CHC4-P	4	N	
7	KEY		N	
8	CHC4-N	6	N	
9	CHC4-N	6	N	

ELM 2
CONN. TAPE DECK ELECTRONICS J02

PNT	SIGNAL NAME	COLOR LV	TYPE	F
1	AS-STRAB	4	N	
2	AS-DATA	7	N	
3	AS-CLK	6	N	
4	AS-WREN	3	N	
5	AS-STR	5	N	
6	AS-STREC	4	N	
7			N	
8			N	
9	+0.0VD	0	N	
10	+5.6V	5	N	
11			N	
12			N	
13			N	
14	AS-FAD	1	N	
15	KEY		N	
16	AS-RESET	9	N	
17			N	
18	+0.0VD		N	
19	AS-HFCLK	8	N	
20	+5.0VA		N	

./.

GRP 40 1.727.681.00 <-- <-- <-- CONTINUATION

ELM 3
CONN. AUDIO CONTROL J03

PNT	SIGNAL NAME	COLOR LV	TYPE	F
1	+0.0VD	1	N	
2	+5.0VA		N	
3	KEY		N	
4	C-INIT	4	N	
5	C-REC	5	N	
6	C-EQM	6	N	
7	C-EQS	7	N	
8	C-EQF	8	N	
9	+5.6V	9	N	
10	KEY		N	
11			N	
12			N	
13			N	
14			N	
15			N	
16			N	
17			N	
18	+15.0VA	8	N	
19	-15.0VA	9	N	
20	+0.0VA	0	N	

ELM 4
CONN. AUDIO CONTROL J04

PNT	SIGNAL NAME	COLOR LV	TYPE	F
1	C-REC1	1	N	
2	C-REC2	2	N	
3	C-REC3	3	N	
4	C-REC4	4	N	
5	C-SYNC1	5	N	
6	C-REPR1	6	N	
7	C-SYNC3	7	N	
8	C-REPR3	8	N	
9	C-SYNC2	9	N	
10	C-REPR2	0	N	
11	C-SYNC4	1	N	
12	C-REPR4	2	N	
13	KEY		N	
14			N	
15			N	
16	KEY		N	
17	C-INPUT1	7	N	
18	C-INPUT2	8	N	
19	C-INPUT3	9	N	
20	C-INPUT4	0	N	

GRP 40 1.727.681.00 <-- <-- <-- CONTINUATION

ELM 5
CONN. MONITOR J05

PNT	SIGNAL NAME	COLOR LV	TYPE	F
1	C-MONIT3	1	N	
2	C-MONIT2	2	N	
3	C-I/O	3	N	
4	C-MONIT1	4	N	
5	C-MONIT4	5	N	
6	KEY		N	
7	A-MONIT	7	N	
8	A-PHIN1	8	N	
9	A-PHOUT1	9	N	
10	A-PHOUT2	6	N	
11	A-PHIN2	1	N	
12	+5.0VA	2	N	
13	A-LSAMP1	3	N	
14	+0.0VA	0	N	
15	+0.0VA	0	N	
16	A-LSB	6	N	
17	A-LSA	7	N	
18	A-LSAMP2	8	N	
19			N	
20			N	

ELM 6
CONN. VU METER J06

PNT	SIGNAL NAME	COLOR LV	TYPE	F
1	+15.0VB	2	N	
2	+0.0VA	0	N	
3	-15.0VB	6	N	
4	KEY		N	
5	A-MONIT4	4	N	
6	A-MONIT3	3	N	
7	A-MONIT1	1	N	
8	A-MONIT2	2	N	

./.

```
*****************************************************************************************************************************
*   STUDER REVOX AG   *   L O C A T I O N   P I N   L I S T          * 91/07/18 * 17:00 *  P A G E  24  *
*****************************************************************************************************************************
*            1.807.060.00  * STUDER  A 807 TAPE RECORDER 4 CH *       * 91/07/10 - 00                                      *
*****************************************************************************************************************************
                                                                                                  <--  <--  <--  CONTINUATION
```

GRP 40 1.727.681.00 <-- <-- <-- CONTINUATION

ELM 11
CONN. AUDIO ELECTRONICS CH1

PNT	SIGNAL NAME	COLOR	LV	TYPE	F
1	+48.0V			N	
2	C-NAB			N	
3	C-MICAT1			N	
4	A-PREOU1			N	
5	C-CALIN1			N	
6	C-UNCIN1			N	
7	C-MICON1			N	

ELM 12
CONN. AUDIO ELECTRONICS CH1

PNT	SIGNAL NAME	COLOR	LV	TYPE	F
1	A-RECIN1			N	
2	C-ERASE1			N	
3	C-BIAS1			N	
4	C-EQA			N	
5	C-EQB			N	
6	+5.0VA			N	
7	WR-BIAS1			N	
8	A-D0			N	
9	A-D1			N	
10	A-D2			N	
11	A-D3			N	
12	+0.0VD			N	
13	WR-REC1			N	
14	AS-STRAB			N	
15	A-D4			N	
16	A-D5			N	
17	A-D6			N	
18	A-D7			N	
19	C-REC1			N	
20	A-HFIN1			N	

./.

GRP 40 1.727.681.00 <-- <-- <-- CONTINUATION

ELM 13
CONN. AUDIO ELECTRONICS CH1

PNT	SIGNAL NAME	COLOR	LV	TYPE	F
1	+15.0VA			N	
2	-15.0VA			N	
3	C-BASS			N	
4	A-SECRP1			N	
5	C-EQB			N	
6	C-EQA			N	
7	C-SYNC1			N	
8	C-REPRO1			N	
9	C-SECRP1			N	
10	A-CTALK1			N	
11	+0.0VA			N	
12	+5.0VA			N	
13	+0.0VD			N	

ELM 14
CONN. AUDIO ELECTRONICS CH1

PNT	SIGNAL NAME	COLOR	LV	TYPE	F
1	A-D0			N	
2	A-D1			N	
3	A-D2			N	
4	A-D3			N	
5	WR-REPR1			N	
6	AS-STRAB			N	
7	A-D4			N	
8	A-D5			N	
9	A-D6			N	
10	A-D7			N	
11	C-NAB			N	
12	A-DRVIN1			N	
13	A-PREOU1			N	
14	A-TAPOU1			N	
15	C-INPUT1			N	
16	C-CALOU1			N	
17	C-UNCOU1			N	
18	C-CUEAT			N	
19	C-OUTSW			N	
20	A-MONIT1			N	

./.

GRP 40 1.727.681.00 <-- <-- <-- CONTINUATION

ELM 15
CONN. INSERT, INPUT CIRCUIT J15

PNT	SIGNAL NAME	COLOR	LV	TYPE	F
1	+5.0VA			N	
2	+0.0VD			N	
3	+15.0VA			N	
4	+0.0VA			N	
5	-15.0VA			N	
6	A-PREOU1			N	
7	C-EQF			N	
8	C-EQM			N	
9	C-EQS			N	
10	C-INSERT			N	
11	C-EQN			N	
12	A-SOURC1			N	
13	A-RECIN1			N	
14	KEY			N	
15	A-PREOU2			N	
16	A-SOURC2			N	
17	A-RECIN2			N	

ELM 16
CONN. INSERT, OUTPUT CIRCUIT J16

PNT	SIGNAL NAME	COLOR	LV	TYPE	F
1	A-DRVIN1			N	
2	A-SOURC1			N	
3	A-TAPOU1			N	
4	KEY			N	
5	A-DRVIN2			N	
6	A-SOURC2			N	
7	A-TAPOU2			N	

ELM 21
CONN. AUDIO ELECTRONICS CH2

PNT	SIGNAL NAME	COLOR	LV	TYPE	F
1	+48.0V			N	
2	C-NAB			N	
3	C-MICAT2			N	
4	A-PREOU2			N	
5	C-CALIN2			N	
6	C-UNCIN2			N	
7	C-MICON2			N	

```
*****************************************************************************************************************************
*   STUDER REVOX AG   *   L O C A T I O N   P I N   L I S T          * 91/07/18 * 17:00 *  P A G E  25  *
*****************************************************************************************************************************
*            1.807.060.00  * STUDER  A 807 TAPE RECORDER 4 CH *       * 91/07/10 - 00                                      *
*****************************************************************************************************************************
                                                                                                  <--  <--  <--  CONTINUATION
```

GRP 40 1.727.681.00 <-- <-- <-- CONTINUATION

ELM 22
CONN. AUDIO ELECTRONICS CH2

PNT	SIGNAL NAME	COLOR	LV	TYPE	F
1	A-RECIN2			N	
2	C-ERASE2			N	
3	C-BIAS2			N	
4	C-EQA			N	
5	C-EQB			N	
6	+5.0VA			N	
7	WR-BIAS2			N	
8	A-D0			N	
9	A-D1			N	
10	A-D2			N	
11	A-D3			N	
12	+0.0VD			N	
13	WR-REC2			N	
14	AS-STRAB			N	
15	A-D4			N	
16	A-D5			N	
17	A-D6			N	
18	A-D7			N	
19	C-REC2			N	
20	A-HFIN2			N	

ELM 23
CONN. AUDIO ELECTRONICS CH2

PNT	SIGNAL NAME	COLOR	LV	TYPE	F
1	+15.0VA			N	
2	-15.0VA			N	
3	C-BASS			N	
4	A-SECRP2			N	
5	C-EQB			N	
6	C-EQA			N	
7	C-SYNC2			N	
8	C-REPRO2			N	
9	C-SECRP2			N	
10	A-CTALK2			N	
11	+0.0VA			N	
12	+5.0VA			N	
13	+0.0VD			N	

GRP 40 1.727.681.00 <-- <-- <-- CONTINUATION

ELM 24
CONN. AUDIO ELECTRONICS CH2

PNT	SIGNAL NAME	COLOR	LV	TYPE	F
1	A-D0			N	
2	A-D1			N	
3	A-D2			N	
4	A-D3			N	
5	WR-REPR2			N	
6	AS-STRAB			N	
7	A-D4			N	
8	A-D5			N	
9	A-D6			N	
10	A-D7			N	
11	C-NAB			N	
12	A-DRVIN2			N	
13	A-PREOU2			N	
14	A-TAPOU2			N	
15	C-INPUT2			N	
16	C-CALOU2			N	
17	C-UNCOU2			N	
18	C-CUEAT			N	
19	C-OUTSW			N	
20	A-MONIT2			N	

ELM 31
CONN. AUDIO ELECTRONICS CH3

PNT	SIGNAL NAME	COLOR	LV	TYPE	F
1	+48.0V			N	
2	C-NAB			N	
3	C-MICAT3			N	
4	A-PREOU3			N	
5	C-CALIN3			N	
6	C-UNCIN3			N	
7	C-MICON3			N	

./.

GRP 40 1.727.681.00 <-- <-- <-- CONTINUATION

ELM 32
CONN. AUDIO ELECTRONICS CH3

PNT	SIGNAL NAME	COLOR	LV	TYPE	F
1	A-RECIN3			N	
2	C-ERASE3			N	
3	C-BIAS3			N	
4	C-EQA			N	
5	C-EQB			N	
6	+5.0VA			N	
7	WR-BIAS3			N	
8	A-D0			N	
9	A-D1			N	
10	A-D2			N	
11	A-D3			N	
12	+0.0VD			N	
13	WR-REC3			N	
14	AS-STRAB			N	
15	A-D4			N	
16	A-D5			N	
17	A-D6			N	
18	A-D7			N	
19	C-REC3			N	
20	A-HFIN3			N	

ELM 33
CONN. AUDIO ELECTRONICS CH3

PNT	SIGNAL NAME	COLOR	LV	TYPE	F
1	+15.0VB			N	
2	-15.0VB			N	
3	C-BASS			N	
4	A-SECRP3			N	
5	C-EQB			N	
6	C-EQA			N	
7	C-SYNC3			N	
8	C-REPRO3			N	
9	C-SECRP3			N	
10	A-CTALK3			N	
11	+0.0VA			N	
12	+5.0VA			N	
13	+0.0VD			N	

STUDER REVOX AG * L O C A T I O N P I N L I S T * 91/07/18 * 17:00 * P A G E 26 *
1.807.060.00 * STUDER A 807 TAPE RECORDER 4 CH * * 91/07/10 - 00 *

<-- <-- <-- CONTINUATION

GRP 40 1.727.681.00
<-- <-- <-- CONTINUATION

ELM 34
CONN. AUDIO ELECTRONICS CH3

PNT	SIGNAL NAME	COLOR LV TYPE	F
1	A-D0		N
2	A-D1		N
3	A-D2		N
4	A-D3		N
5	WR-REPR3		N
6	AS-STRAB		N
7	A-D4		N
8	A-D5		N
9	A-D6		N
10	A-D7		N
11	C-NAB		N
12	A-DRVIN3		N
13	A-PREOU3		N
14	A-TAPOU3		N
15	C-INPUT3		N
16	C-CALOU3		N
17	C-UNCOU3		N
18	C-CUEAT		N
19	C-OUTSW		N
20	A-MONIT3		N

ELM 35
CONN. INSERT, INPUT CIRCUIT J35

PNT	SIGNAL NAME	COLOR LV TYPE	F
1	+5.0VA		N
2	+0.0VD		N
3	+15.0VB		N
4	+0.0VA		N
5	-15.0VB		N
6	A-PREOU3		N
7	C-EQF		N
8	C-EQM		N
9	C-EQS		N
10	C-INSERT		N
11	C-EQN		N
12	A-SOURC3		N
13	A-RECIN3		N
14	KEY		N
15	A-PREOU4		N
16	A-SOURC4		N
17	A-RECIN4		N

GRP 40 1.727.681.00
<-- <-- <-- CONTINUATION

ELM 36
CONN. INSERT, OUTPUT CIRCUIT J36

PNT	SIGNAL NAME	COLOR LV TYPE	F
1	A-DRVIN3		N
2	A-SOURC3		N
3	A-TAPOU3		N
4	KEY		N
5	A-DRVIN4		N
6	A-SOURC4		N
7	A-TAPOU4		N

ELM 41
CONN. AUDIO ELECTRONICS CH4

PNT	SIGNAL NAME	COLOR LV TYPE	F
1	+48.0V		N
2	C-NAB		N
3	C-MICAT4		N
4	A-PREOU4		N
5	C-CALIN4		N
6	C-UNCIN4		N
7	C-MICON4		N

./.

GRP 40 1.727.681.00
<-- <-- <-- CONTINUATION

ELM 42
CONN. AUDIO ELECTRONICS CH4

PNT	SIGNAL NAME	COLOR LV TYPE	F
1	A-RECIN4		N
2	C-ERASE4		N
3	C-BIAS4		N
4	C-EQA		N
5	C-EQB		N
6	+5.0VA		N
7	WR-BIAS4		N
8	A-D0		N
9	A-D1		N
10	A-D2		N
11	A-D3		N
12	+0.0VD		N
13	WR-REC4		N
14	AS-STRAB		N
15	A-D4		N
16	A-D5		N
17	A-D6		N
18	A-D7		N
19	C-REC4		N
20	A-HFIN4		N

ELM 43
CONN. AUDIO ELECTRONICS CH4

PNT	SIGNAL NAME	COLOR LV TYPE	F
1	+15.0VB		N
2	-15.0VB		N
3	C-BASS		N
4	A-SECRP4		N
5	C-EQB		N
6	C-EQA		N
7	C-SYNC4		N
8	C-REPRO4		N
9	C-SECRP4		N
10	A-CTALK4		N
11	+0.0VA		N
12	+5.0VA		N
13	+0.0VD		N

STUDER REVOX AG * L O C A T I O N P I N L I S T * 91/07/18 * 17:00 * P A G E 27 *
1.807.060.00 * STUDER A 807 TAPE RECORDER 4 CH * * 91/07/10 - 00 *

<-- <-- <-- CONTINUATION

GRP 40 1.727.681.00
<-- <-- <-- CONTINUATION

ELM 44
CONN. AUDIO ELECTRONICS CH1

PNT	SIGNAL NAME	COLOR LV TYPE	F
1	A-D0		N
2	A-D1		N
3	A-D2		N
4	A-D3		N
5	WR-REPR4		N
6	AS-STRAB		N
7	A-D4		N
8	A-D5		N
9	A-D6		N
10	A-D7		N
11	C-NAB		N
12	A-DRVIN4		N
13	A-PREOU4		N
14	A-TAPOU4		N
15	C-INPUT4		N
16	C-CALOU4		N
17	C-UNCOU4		N
18	C-CUEAT		N
19	C-OUTSW		N
20	A-MONIT4		N

GRP 41 1.727.460.00
AUDIO ELECTRONICS CH1

ELM 1
CONN. MIC LEVEL POT, CH1

PNT	SIGNAL NAME	COLOR LV TYPE	F
1	A-LVMIA1	9	N
2	KEY		N
3	A-LVMIB1	6	N
4	A-LVMIC1	S	N

ELM 2
CONN. MIC AND LINE INPUTS, CH1

PNT	SIGNAL NAME	COLOR LV TYPE	F
1	A-LINA1	9	N
2	A-LINB1	6	N
3	A-LINS1	S	N
4	KEY		N
5	A-MICSS1	S	N
6	A-MICSB1	6	N
7	A-MICSA1	9	N
8	+0.0VA		N
9	A-MICSW1		N
10	A-MICAS1		N

ELM 3
CONN. LINE LEVEL POT, CH1

PNT	SIGNAL NAME	COLOR LV TYPE	F
1	A-LVINA1	9	N
2	A-LVINB1	6	N
3	KEY		N
4	A-LVINC1	0	N

ELM 4
CONN. HEAD BLOCK, RECORD

PNT	SIGNAL NAME	COLOR LV TYPE	F
1	RECHH-01	8	N
2	RECHL-01	7	N
3	ERAHH-01	1	N
4	KEY		N
5	ERAHL-01	9	N

GRP 41 1.727.460.00
<-- <-- <-- CONTINUATION

ELM 5
CONN. HEAD BLOCK, REPRO

PNT	SIGNAL NAME	COLOR LV TYPE	F
1	REPHL-01	6	N
2	REPHH-01	9	N
3	KEY		N
4	REPSC-01	S	N

ELM 6
CONN. OUTPUT LEVEL POT, CH1

PNT	SIGNAL NAME	COLOR LV TYPE	F
1	A-LVOUA1	9	N
2	KEY		N
3	A-LVOUB1	6	N
4	A-LVOUC1	0	N

ELM 7
CONN. LINE OUTPUT CONNECTOR, CH1

PNT	SIGNAL NAME	COLOR LV TYPE	F
1	A-LOUTB1	3	N
2	A-LOUTA1	2	N
3	KEY		N
4	A-VUMTR1	1	N

ELM 11
CONN. AUDIO CTL, J21

PNT	SIGNAL NAME	COLOR LV TYPE	F
1	+48.0V		N
2	C-NAB		N
3	C-MICAT1		N
4	A-PREOU1		N
5	C-CALIN1		N
6	C-UNCIN1		N
7	C-MICON1		N

./.

```
*****************************************************************************************************************************
*    STUDER REVOX AG    *    L O C A T I O N     P I N     L I S T          * 91/07/18 * 17:00 *   P A G E  28   *
*****************************************************************************************************************************
*              1.807.060.00  * STUDER  A 807 TAPE RECORDER 4 CH *            * 91/07/10 - 00                          *
*****************************************************************************************************************************
                                                                                                  <--  <--  <--  CONTINUATION
```

GRP 41 1.727.460.00 <-- <-- <-- CONTINUATION

ELM 12
CONN. AUDIO CTL, J22

PNT	SIGNAL NAME	COLOR	LV	TYPE	F
1	A-RECIN1			N	
2	C-ERASE1			N	
3	C-BIAS1			N	
4	C-EQA			N	
5	C-EQB			N	
6	+5.0VA			N	
7	WR-BIAS1			N	
8	A-D0			N	
9	A-D1			N	
10	A-D2			N	
11	A-D3			N	
12	+0.0VD			N	
13	WR-REC1			N	
14	AS-STRAB			N	
15	A-D4			N	
16	A-D5			N	
17	A-D6			N	
18	A-D7			N	
19	C-REC1			N	
20	A-HFIN1			N	

ELM 13
CONN. AUDIO CTL, J23

PNT	SIGNAL NAME	COLOR	LV	TYPE	F
1	+15.0V			N	
2	-15.0V			N	
3	C-BASS			N	
4	A-SECRP1			N	
5	C-EQB			N	
6	C-EQA			N	
7	C-SYNC1			N	
8	C-REPRO1			N	
9	C-SECRP1			N	
10	A-CTALK1			N	
11	+0.0VA			N	
12	+5.0VA			N	
13	+0.0VD			N	

./.

GRP 41 1.727.460.00 <-- <-- <-- CONTINUATION

ELM 14
CONN. AUDIO CTL, J24

PNT	SIGNAL NAME	COLOR	LV	TYPE	F
1	A-D0			N	
2	A-D1			N	
3	A-D2			N	
4	A-D3			N	
5	WR-REPR1			N	
6	AS-STRAB			N	
7	A-D4			N	
8	A-D5			N	
9	A-D6			N	
10	A-D7			N	
11	C-NAB			N	
12	A-DRVIN1			N	
13	A-PREOU1			N	
14	A-TAPOU1			N	
15	C-INPUT1			N	
16	C-CALOU1			N	
17	C-UNCOU1			N	
18	C-CUEAT			N	
19	C-OUTSW			N	
20	A-MONIT1			N	

GRP 42 1.727.460.00
AUDIO ELECTRONICS CH2

ELM 1
CONN. MIC LEVEL POT, CH2

PNT	SIGNAL NAME	COLOR	LV	TYPE	F
1	A-LVMIA2	9		N	
2	KEY			N	
3	A-LVMIB2	6		N	
4	A-LVMIC2	S		N	

ELM 2
CONN. MIC AND LINE INPUTS, CH2

PNT	SIGNAL NAME	COLOR	LV	TYPE	F
1	A-LINA2	9		N	
2	A-LINB2	6		N	
3	A-LINS2	S		N	
4	KEY			N	
5	A-MICSS2	S		N	
6	A-MICSB2	6		N	
7	A-MICSA2	9		N	
8	+0.0VA			N	
9	A-MICSW2			N	
10	A-MICAS2			N	

ELM 3
CONN. LINE LEVEL POT, CH2

PNT	SIGNAL NAME	COLOR	LV	TYPE	F
1	A-LVINA2	9		N	
2	A-LVINB2	6		N	
3	KEY			N	
4	A-LVINC2	0		N	

ELM 4
CONN. HEAD BLOCK, RECORD

PNT	SIGNAL NAME	COLOR	LV	TYPE	F
1	RECHH-02	1		N	
2	RECHL-02	0		N	
3	ERAHH-02	3		N	
4	KEY			N	
5	ERAHL-02	2		N	


```
*****************************************************************************************************************************
*    STUDER REVOX AG    *    L O C A T I O N     P I N     L I S T          * 91/07/18 * 17:00 *   P A G E  29   *
*****************************************************************************************************************************
*              1.807.060.00  * STUDER  A 807 TAPE RECORDER 4 CH *            * 91/07/10 - 00                          *
*****************************************************************************************************************************
                                                                                                  <--  <--  <--  CONTINUATION
```


GRP 42 1.727.460.00 <-- <-- <-- CONTINUATION

ELM 5
CONN. HEAD BLOCK, REPRO

PNT	SIGNAL NAME	COLOR	LV	TYPE	F
1	REPHL-02	6		N	
2	REPHH-02	9		N	
3	KEY			N	
4	REPSC-02	S		N	

ELM 6
CONN. OUTPUT LEVEL POT, CH2

PNT	SIGNAL NAME	COLOR	LV	TYPE	F
1	A-LVOUA2	9		N	
2	KEY			N	
3	A-LVOUB2	6		N	
4	A-LVOUC2	0		N	

ELM 7
CONN. LINE OUTPUT CONNECTOR, CH2

PNT	SIGNAL NAME	COLOR	LV	TYPE	F
1	A-LOUTB2	3		N	
2	A-LOUTA2	2		N	
3	KEY			N	
4	A-VUMTR2	1		N	

ELM 11
CONN. AUDIO CTL, J41

PNT	SIGNAL NAME	COLOR	LV	TYPE	F
1	+48.0V			N	
2	C-NAB			N	
3	C-MICAT2			N	
4	A-PREOU2			N	
5	C-CALIN2			N	
6	C-UNCIN2			N	
7	C-MICON2			N	

GRP 42 1.727.460.00 <-- <-- <-- CONTINUATION

ELM 12
CONN. AUDIO CTL, J42

PNT	SIGNAL NAME	COLOR	LV	TYPE	F
1	A-RECIN2			N	
2	C-ERASE2			N	
3	C-BIAS2			N	
4	C-EQA			N	
5	C-EQB			N	
6	+5.0VA			N	
7	WR-BIAS2			N	
8	A-D0			N	
9	A-D1			N	
10	A-D2			N	
11	A-D3			N	
12	+0.0VD			N	
13	WR-REC2			N	
14	AS-STRAB			N	
15	A-D4			N	
16	A-D5			N	
17	A-D6			N	
18	A-D7			N	
19	C-REC2			N	
20	A-HFIN2			N	

ELM 13
CONN. AUDIO CTL, J43

PNT	SIGNAL NAME	COLOR	LV	TYPE	F
1	+15.0V			N	
2	-15.0V			N	
3	C-BASS			N	
4	A-SECRP2			N	
5	C-EQB			N	
6	C-EQA			N	
7	C-SYNC2			N	
8	C-REPRO2			N	
9	C-SECRP2			N	
10	A-CTALK2			N	
11	+0.0VA			N	
12	+5.0VA			N	
13	+0.0VD			N	

GRP 42 1.727.460.00 <-- <-- <-- CONTINUATION

ELM 14
CONN. AUDIO CTL, J44

PNT	SIGNAL NAME	COLOR	LV	TYPE	F
1	A-D0			N	
2	A-D1			N	
3	A-D2			N	
4	A-D3			N	
5	WR-REPR2			N	
6	AS-STRAB			N	
7	A-D4			N	
8	A-D5			N	
9	A-D6			N	
10	A-D7			N	
11	C-NAB			N	
12	A-DRVIN2			N	
13	A-PREOU2			N	
14	A-TAPOU2			N	
15	C-INPUT2			N	
16	C-CALOU2			N	
17	C-UNCOU2			N	
18	C-CUEAT			N	
19	C-OUTSW			N	
20	A-MONIT2			N	

```
*    STUDER REVOX AG   *   L O C A T I O N   P I N   L I S T          * 91/07/18 * 17:00 *  P A G E  30  *
*            1.807.060.00  * STUDER  A 807 TAPE RECORDER 4 CH *        * 91/07/10 - 00                     *
                                                                  <--  <--  <--  CONTINUATION
```

GRP 43 1.727.460.00
AUDIO ELECTRONICS CH3

ELM 1
CONN. MIC LEVEL POT, CH3

PNT	SIGNAL NAME	COLOR LV	TYPE	F
1	A-LVMIA3	9	N	
2	KEY		N	
3	A-LVMIB3	6	N	
4	A-LVMIC3	S	N	

ELM 2
CONN. MIC AND LINE INPUTS, CH3

PNT	SIGNAL NAME	COLOR LV	TYPE	F
1	A-LINA3	9	N	
2	A-LINB3	6	N	
3	A-LINS3	S	N	
4	KEY		N	
5	A-MICSS3	S	N	
6	A-MICSB3	6	N	
7	A-MICSA3	9	N	
8	+0.0VA		N	
9	A-MICSW3		N	
10	A-MICAS3		N	

ELM 3
CONN. LINE LEVEL POT, CH3

PNT	SIGNAL NAME	COLOR LV	TYPE	F
1	A-LVINA3	9	N	
2	A-LVINB3	6	N	
3	KEY		N	
4	A-LVINC3	0	N	

ELM 4
CONN. HEAD BLOCK, RECORD

PNT	SIGNAL NAME	COLOR LV	TYPE	F
1	RECHH-03	8	N	
2	RECHL-03	7	N	
3	ERAHH-03	1	N	
4	KEY		N	
5	ERAHL-03	9	N	

GRP 43 1.727.460.00
<-- <-- <-- CONTINUATION

ELM 5
CONN. HEAD BLOCK, REPRO

PNT	SIGNAL NAME	COLOR LV	TYPE	F
1	REPHL-03	6	N	
2	REPHH-03	9	N	
3	KEY		N	
4	REPSC-03	S	N	

ELM 6
CONN. OUTPUT LEVEL POT, CH3

PNT	SIGNAL NAME	COLOR LV	TYPE	F
1	A-LVOUA3	9	N	
2	KEY		N	
3	A-LVOUB3	6	N	
4	A-LVOUC3	0	N	

ELM 7
CONN. LINE OUTPUT CONNECTOR, CH3

PNT	SIGNAL NAME	COLOR LV	TYPE	F
1	A-LOUTB3	3	N	
2	A-LOUTA3	2	N	
3	KEY		N	
4	A-VUMTR3	1	N	

ELM 11
CONN. AUDIO CTL, J21

PNT	SIGNAL NAME	COLOR LV	TYPE	F
1	+48.0V		N	
2	C-NAB		N	
3	C-MICAT3		N	
4	A-PREOU3		N	
5	C-CALIN3		N	
6	C-UNCIN3		N	
7	C-MICON3		N	

./.

GRP 43 1.727.460.00
<-- <-- <-- CONTINUATION

ELM 12
CONN. AUDIO CTL, J22

PNT	SIGNAL NAME	COLOR LV	TYPE	F
1	A-RECIN3		N	
2	C-ERASE3		N	
3	C-BIAS3		N	
4	C-EQA		N	
5	C-EQB		N	
6	+5.0VA		N	
7	WR-BIAS3		N	
8	A-D0		N	
9	A-D1		N	
10	A-D2		N	
11	A-D3		N	
12	+0.0VD		N	
13	WR-REC3		N	
14	AS-STRAB		N	
15	A-D4		N	
16	A-D5		N	
17	A-D6		N	
18	A-D7		N	
19	C-REC3		N	
20	A-HFIN3		N	

ELM 13
CONN. AUDIO CTL, J23

PNT	SIGNAL NAME	COLOR LV	TYPE	F
1	+15.0V		N	
2	-15.0V		N	
3	C-BASS		N	
4	A-SECRP3		N	
5	C-EQB		N	
6	C-EQA		N	
7	C-SYNC3		N	
8	C-REPRO3		N	
9	C-SECRP3		N	
10	A-CTALK3		N	
11	+0.0VA		N	
12	+5.0VA		N	
13	+0.0VD		N	

./.

```
*    STUDER REVOX AG   *   L O C A T I O N   P I N   L I S T          * 91/07/18 * 17:00 *  P A G E  31  *
*            1.807.060.00  * STUDER  A 807 TAPE RECORDER 4 CH *        * 91/07/10 - 00                     *
                                                                  <--  <--  <--  CONTINUATION
```

GRP 43 1.727.460.00
<-- <-- <-- CONTINUATION

ELM 14
CONN. AUDIO CTL, J24

PNT	SIGNAL NAME	COLOR LV	TYPE	F
1	A-D0		N	
2	A-D1		N	
3	A-D2		N	
4	A-D3		N	
5	WR-REPR3		N	
6	AS-STRAB		N	
7	A-D4		N	
8	A-D5		N	
9	A-D6		N	
10	A-D7		N	
11	C-NAB		N	
12	A-DRVIN3		N	
13	A-PREOU3		N	
14	A-TAPOU3		N	
15	C-INPUT3		N	
16	C-CALOU3		N	
17	C-UNCOU3		N	
18	C-CUEAT		N	
19	C-OUTSW		N	
20	A-MONIT3		N	

GRP 44 1.727.460.00
AUDIO ELECTRONICS CH4

ELM 1
CONN. MIC LEVEL POT, CH4

PNT	SIGNAL NAME	COLOR LV	TYPE	F
1	A-LVMIA4	9	N	
2	KEY		N	
3	A-LVMIB4	6	N	
4	A-LVMIC4	S	N	

ELM 2
CONN. MIC AND LINE INPUTS, CH4

PNT	SIGNAL NAME	COLOR LV	TYPE	F
1	A-LINA4	9	N	
2	A-LINB4	6	N	
3	A-LINS4	S	N	
4	KEY		N	
5	A-MICSS4	S	N	
6	A-MICSB4	6	N	
7	A-MICSA4	9	N	
8	+0.0VA		N	
9	A-MICSW4		N	
10	A-MICAS4		N	

ELM 3
CONN. LINE LEVEL POT, CH4

PNT	SIGNAL NAME	COLOR LV	TYPE	F
1	A-LVINA4	9	N	
2	A-LVINB4	6	N	
3	KEY		N	
4	A-LVINC4	0	N	

ELM 4
CONN. HEAD BLOCK, RECORD

PNT	SIGNAL NAME	COLOR LV	TYPE	F
1	RECHH-04	8	N	
2	RECHL-04	7	N	
3	ERAHH-04	1	N	
4	KEY		N	
5	ERAHL-04	9	N	

GRP 44 1.727.460.00
<-- <-- <-- CONTINUATION

ELM 5
CONN. HEAD BLOCK, REPRO

PNT	SIGNAL NAME	COLOR LV	TYPE	F
1	REPHL-04	6	N	
2	REPHH-04	9	N	
3	KEY		N	
4	REPSC-04	S	N	

ELM 6
CONN. OUTPUT LEVEL POT, CH4

PNT	SIGNAL NAME	COLOR LV	TYPE	F
1	A-LVOUA4	9	N	
2	KEY		N	
3	A-LVOUB4	6	N	
4	A-LVOUC4	0	N	

ELM 7
CONN. LINE OUTPUT CONNECTOR, CH4

PNT	SIGNAL NAME	COLOR LV	TYPE	F
1	A-LOUTB4	3	N	
2	A-LOUTA4	2	N	
3	KEY		N	
4	A-VUMTR4	1	N	

ELM 11
CONN. AUDIO CTL, J21

PNT	SIGNAL NAME	COLOR LV	TYPE	F
1	+48.0V		N	
2	C-NAB		N	
3	C-MICAT4		N	
4	A-PREOU4		N	
5	C-CALIN4		N	
6	C-UNCIN4		N	
7	C-MICON4		N	

./.

<-- <-- <-- CONTINUATION

GRP 44 1.727.460.00
<-- <-- <-- CONTINUATION

ELM 12
CONN. AUDIO CTL, J22

PNT	SIGNAL NAME	COLOR	LV	TYPE	F
1	A-RECIN4			N	
2	C-ERASE4			N	
3	C-BIAS4			N	
4	C-EQA			N	
5	C-EQB			N	
6	+5.0VA			N	
7	WR-BIAS4			N	
8	A-D0			N	
9	A-D1			N	
10	A-D2			N	
11	A-D3			N	
12	+0.0VD			N	
13	WR-REC4			N	
14	AS-STRAB			N	
15	A-D4			N	
16	A-D5			N	
17	A-D6			N	
18	A-D7			N	
19	C-REC1			N	
20	A-HFIN4			N	

ELM 13
CONN. AUDIO CTL, J23

PNT	SIGNAL NAME	COLOR	LV	TYPE	F
1	+15.0V			N	
2	-15.0V			N	
3	C-BASS			N	
4	A-SECRP4			N	
5	C-EQB			N	
6	C-EQA			N	
7	C-SYNC4			N	
8	C-REPRO4			N	
9	C-SECRP4			N	
10	A-CTALK4			N	
11	+0.0VA			N	
12	+5.0VA			N	
13	+0.0VD			N	

./.

GRP 44 1.727.460.00
<-- <-- <-- CONTINUATION

ELM 14
CONN. AUDIO CTL, J24

PNT	SIGNAL NAME	COLOR	LV	TYPE	F
1	A-D0			N	
2	A-D1			N	
3	A-D2			N	
4	A-D3			N	
5	WR-REPR4			N	
6	AS-STRAB			N	
7	A-D4			N	
8	A-D5			N	
9	A-D6			N	
10	A-D7			N	
11	C-NAB			N	
12	A-DRVIN4			N	
13	A-PREOU4			N	
14	A-TAPOU4			N	
15	C-INPUT4			N	
16	C-CALOU4			N	
17	C-UNCOU4			N	
18	C-CUEAT			N	
19	C-OUTSW			N	
20	A-MONIT4			N	

GRP 47 1.727.685.00
NRS-CONTROL

ELM 1
CONN. TO AUDIO CONTROL J03

PNT	SIGNAL NAME	COLOR	LV	TYPE	F
1	+0.0VD			N	
2	+5.0V			N	
3				N	
4	C-INIT			N	
5	C-REC			N	
6	C-EQM			N	
7	C-EQS			N	
8	C-EQF			N	
9	+5.6V			N	
10				N	
11				N	
12				N	
13				N	
14				N	
15				N	
16				N	
17				N	
18	+15.0V			N	
19	-15.0V			N	
20	+0.0VA			N	

ELM 2
CONN. TO AUDIO CONTROL J04

PNT	SIGNAL NAME	COLOR	LV	TYPE	F
1	C-REC1			N	
2	C-REC2			N	
3	C-REC3			N	
4	C-REC4			N	
5	C-SYNC1			N	
6	C-REPR1			N	
7	C-SYNC3			N	
8	C-REPR3			N	
9	C-SYNC2			N	
10	C-REPR2			N	
11	C-SYNC4			N	
12	C-REPR4			N	
13	KEY			N	
14				N	
15				N	
16	KEY			N	
17	C-INPUT1			N	
18	C-INPUT2			N	
19	C-INPUT3			N	
20	C-INPUT4			N	

<-- <-- <-- CONTINUATION

GRP 47 1.727.685.00
<-- <-- <-- CONTINUATION

ELM 3
CONN. NRS CONTROL J3

PNT	SIGNAL NAME	COLOR	LV	TYPE	F
1	+0.0VD			N	
2	+5.0V			N	
3				N	
4	C-INIT			N	
5	C-REC			N	
6	C-EQM			N	
7	C-EQS			N	
8	C-EQF			N	
9	+5.6V			N	
10				N	
11				N	
12				N	
13				N	
14				N	
15				N	
16				N	
17				N	
18	+15.0V			N	
19	-15.0V			N	
20	+0.0VA			N	

ELM 4
CONN. NRS CONTROL J4

PNT	SIGNAL NAME	COLOR	LV	TYPE	F
1	C-REC1			N	
2	C-REC2			N	
3	C-REC3			N	
4	C-REC4			N	
5	C-SYNC1			N	
6	C-REPR1			N	
7	C-SYNC3			N	
8	C-REPR3			N	
9	C-SYNC2			N	
10	C-REPR2			N	
11	C-SYNC4			N	
12	C-REPR4			N	
13	KEY			N	
14				N	
15				N	
16	KEY			N	
17	C-INPUT1			N	
18	C-INPUT2			N	
19	C-INPUT3			N	
20	C-INPUT4			N	

GRP 47 1.727.685.00
<-- <-- <-- CONTINUATION

ELM 5
CONN. NRS CONTROL J2

PNT	SIGNAL NAME	COLOR	LV	TYPE	F
1	+0.0VD	0		N	
2	KEY				
3	B-DBY-04	4		N	
4	B-TLC-04	8		N	
5	B-DBY-03	3		N	
6	B-TLC-03	7		N	
7	B-DBY-02	2		N	
8	B-TLC-02	6		N	
9					
10	B-DBY-01	1		N	
11	B-TLC-01	5		N	

GRP 51 1.727.652.00
AUDIO REMOTE CTL. IF.

ELM 1
AUDIO REMOTE CONTROL IF.

PNT	SIGNAL NAME	COLOR	LV	TYPE	F
1	ARC-DPEN	6		N	
2	ARC-DATA	2		N	
3	ARC-CLK	3		N	
4	ARC-MXEN	4		N	
5	ARC-LDEN	5		N	
6	+24V-RMT	7		N	
7	+0.0VD	0		N	
8	+0.0VD	0		N	
9	ARC-D7	1		N	
10	ARC-D4	4		N	
11	KEY				
12	ARC-D0	9		N	
13	ARC-D5	3		N	
14	ARC-D6	2		N	
15					

ELM 9
CONN. COMMAND PANEL J09

PNT	SIGNAL NAME	COLOR	LV	TYPE	F
1	SM-D7	1		N	
2	SM-D6	2		N	
3	SM-D5	3		N	
4	SM-D4	4		N	
5	SM-D3	5		N	
6	SM-D2	6		N	
7	SM-D1	7		N	
8	SM-D0	8		N	
9	DS-DATA	9		N	
10	DS-CLK	9		N	
11	DS-ENDPL	1		N	
12	DS-ENLDT	2		N	
13	KEY				
14	+15.0V	2		N	
15	-15.0V	6		N	
16	+0.0VA	0		N	
17	+5.6V	5		N	
18	+0.0VD	0		N	
19	DS-ENMTX	9		N	
20	DS-ENLDA	2		N	

./.

```
*****************************************************************************************************************************
*   STUDER REVOX AG   *   L O C A T I O N   P I N   L I S T          * 91/07/18 * 17:00 *  P A G E  34  *
*****************************************************************************************************************************
*           1.807.060.00  * STUDER  A 807 TAPE RECORDER 4 CH *         * 91/07/10 - 00                                    *
*****************************************************************************************************************************
                                                                                          <--  <--  <--  CONTINUATION
```

GRP 51 1.727.652.00 <-- <-- <-- CONTINUATION

ELM 11 CONN. PARALLEL REMOTE A J11

PNT	SIGNAL NAME	COLOR LV	TYPE	F
1	FAD1	1	N	
2	FAD2	2	N	
3	IR-REFEX	3	N	
4	KEY			
5	SR-FADRY	5	N	
6	SR-LOCST	6	N	
7	SR-LIFT	7	N	
8	+0.0V	8	N	
9	SR-PLAY	9	N	
10	SR-FORW	0	N	
11	SR-REW	1	N	
12	SR-STOP	2	N	
13	SR-REC	3	N	
14	SR-VRSPD	4	N	
15	SR-RESET	5	N	
16	SR-ZLOC	6	N	

ELM 12 CONN. PARALLEL REMOTE B J12

PNT	SIGNAL NAME	COLOR LV	TYPE	F
1	BR-PLAY	1	N	
2	BR-FORW	2	N	
3	BR-REW	3	N	
4	BR-STOP	4	N	
5	BR-REC	5	N	
6	BR-VRSPD	6	N	
7	BR-FADRY	7	N	
8	BR-LOCST	8	N	
9	KEY			
10	+24V-RMT	0	N	

GRP 70 1.727.710.00 TIME CODE PROCESSOR

ELM 1 TO HEAD BLOCK CONNECTOR J01

PNT	SIGNAL NAME	COLOR LV	TYPE	F
1	ERAHL-TC		N	
2	KEY		N	
3	ERAHH-TC		N	
4	ERASC-TC		N	
5	RECHL-TC		N	
6	RECHH-TC		N	
7	RECSC-TC		N	

ELM 2 CONN. AUDIO CONTROL J02

PNT	SIGNAL NAME	COLOR LV	TYPE	F
1	+0.0VD	1	N	
2			N	
3			N	
4	C-INIT	4	N	
5	C-REC	5	N	
6	C-EQM	6	N	
7	C-EQS	7	N	
8	C-EQF	8	N	
9	+5.6V	9	N	
10	MV-CLK1	0	N	
11			N	
12			N	
13			N	
14			N	
15			N	
16			N	
17			N	
18	+15.0VA	8	N	
19	-15.0VA	9	N	
20	+0.0VA	0	N	

./.

GRP 70 1.727.710.00 <-- <-- <-- CONTINUATION

ELM 3 CONN. AUDIO CONTROL J03

PNT	SIGNAL NAME	COLOR LV	TYPE	F
1	C-REC1	1	N	
2	C-REC2	2	N	
3	C-REC3	3	N	
4	C-REC4	4	N	
5	C-SYNC1	5	N	
6	C-REPR1	6	N	
7	C-SYNC3	7	N	
8	C-REPR3	8	N	
9	C-SYNC2	9	N	
10	C-REPR2	0	N	
11	C-SYNC4	1	N	
12	C-REPR4	2	N	
13	KEY		N	
14			N	
15			N	
16	KEY		N	
17	C-INPUT1	7	N	
18	C-INPUT2	8	N	
19	C-INPUT3	9	N	
20	C-INPUT4	0	N	

ELM 4 CONN. TAPE DECK SERIAL CTL. J04

PNT	SIGNAL NAME	COLOR LV	TYPE	F
1	RCVDATA	1	N	
2	+0.0V	0	N	
3	KEY		N	
4	+24V-RMT	8	N	
5	SN-DATA	2	N	

ELM 5 CONN. RS 232 J05

PNT	SIGNAL NAME	COLOR LV	TYPE	F
1	RCVDATA	1	N	
2	KEY		N	
3	+0.0V	0	N	
4	+24V-RMT	8	N	
5	SN-DATA	2	N	

```
*****************************************************************************************************************************
*   STUDER REVOX AG   *   L O C A T I O N   P I N   L I S T          * 91/07/18 * 17:00 *  P A G E  35  *
*****************************************************************************************************************************
*           1.807.060.00  * STUDER  A 807 TAPE RECORDER 4 CH *         * 91/07/10 - 00                                    *
*****************************************************************************************************************************
                                                                                          <--  <--  <--  CONTINUATION
```

GRP 70 1.727.710.00 <-- <-- <-- CONTINUATION

ELM 6 CONN. REMOTE DISPLAY J06

PNT	SIGNAL NAME	COLOR LV	TYPE	F
1	+0.0V	0	N	
2	DSP-DTCT	3	N	
3	TX-DSPLY	2	N	
4	+24V-RMT	7	N	
5	KEY		N	

ELM 7 CONN. KEYBOARD CTL. J07

PNT	SIGNAL NAME	COLOR LV	TYPE	F
1	MRX-F	4	N	
2	KEY		N	
3	SM-DO	0	N	
4	KEY		N	
5	MRX-E	3	N	

ELM 8 CONN. RES J08

PNT	SIGNAL NAME	COLOR LV	TYPE	F
1			N	
2			N	
3			N	
4			N	
5			N	
6			N	
7			N	
8			N	
9			N	
10			N	

GRP 70 1.727.710.00 <-- <-- <-- CONTINUATION

ELM 9 CONN. TIME CODE INPUT/OUTPUT XLR J09

PNT	SIGNAL NAME	COLOR LV	TYPE	F
1	TC-INS	S	N	
2	TC-INA	9	N	
3	TC-INB	6	N	
4	TC-OUTS	S	N	
5	KEY		N	
6	TC-OUTA	9	N	
7	TC-OUTB	6	N	

ELM 10 CONN. TIME CODE WRITE/READ UNIT J10

PNT	SIGNAL NAME	COLOR LV	TYPE	F
20	TA-ACTTC			
21	+0.0V			
22	+15.0VA			
23	-15.0VA			
24	+5.6V			
25	TD-C307K			
26	CA-SAFE			
27	CA-ADR-R			
28	CA-ADR-S			
29	CA-ADR-T			
30	CA-ADR-U			
31	CA-DATA0			
32	CA-DATA1			
33	CA-DATA2			
34	CA-DATA3			
35	CA-DATA4			
36	CA-DATA5			
37	CA-DATA6			
38	CA-DATA7			
39	CA-CHSTC			

GRP 70 1.727.710.00 <-- <-- <-- CONTINUATION

ELM 11 CONN. TIME CODE WRITE/READ UNIT J11

PNT	SIGNAL NAME	COLOR LV	TYPE	F
1	T-TCINDL			
2	T-TCOUDL			
3				
4	ERAHH-TC			
5	ERAHL-TC			
6				
7	RECHH-TC			
8	RECHL-TC			
9				
10	REPHH-TC			
11	REPHL-TC			
12				
13				
14	T-TCPRES			
15	LINFA-TC			
16	LINFB-TC			
17	LOUFA-TC			
18	LOUFB-TC			

./.

```
*****************************************************************************************************************************
*   STUDER REVOX AG   *    L  O  C  A  T  I  O  N    P  I  N    L  I  S  T          *  91/07/18  *  17:00  *   P A G E  36   *
*****************************************************************************************************************************
*            1.807.060.00  * STUDER  A 807 TAPE RECORDER 4 CH *                      *  91/07/10 - 00                          *
*****************************************************************************************************************************
                                                                                                  <--  <--  <--  CONTINUATION
```

GRP 70 1.727.710.00
<-- <-- <-- CONTINUATION

ELM 21
TIME CODE WRITE/READ UNIT

PNT	SIGNAL NAME	COLOR	LV	TYPE	F
1	T-TCINDL				
2	T-TCOUDL				
3					
4	ERAHH-TC				
5	ERAHL-TC				
6					
7	RECHH-TC				
8	RECHL-TC				
9					
10	REPHH-TC				
11	REPHL-TC				
12					
13					
14	T-TCPRES				
15	LINFA-TC				
16	LINFB-TC				
17	LOUFA-TC				
18	LOUFB-TC				
19	KEY				
20	TA-ACTTC				
21	+0.0V				
22	+15.0VA				
23	-15.0VA				
24	+5.6V				
25	TD-C307K				
26	CA-SAFE				
27	CA-ADR-R				
28	CA-ADR-S				
29	CA-ADR-T				
30	CA-ADR-U				
31	CA-DATA0				
32	CA-DATA1				
33	CA-DATA2				
34	CA-DATA3				
35	CA-DATA4				
36	CA-DATA5				
37	CA-DATA6				
38	CA-DATA7				
39	CA-CHSTC				

GRP 94 1.727.940.00
EXT. VU PANEL

ELM 1
CONN. VU PANEL, CTL

PNT	SIGNAL NAME	COLOR	LV	TYPE	F
1	+5.6V	3		N	
2	+0.0VD	0		N	
3	EXT-D6	6		N	
4	EXT-D5	5		N	
5	+15.0V	2		N	
6	KEY			N	
7	+0.0VA	0		N	
8	-15.0V	6		N	
9	EXT-D7	7		N	
12	EXT-D4	4		N	
13	A-MONIT1	1		N	
14	A-MONIT2	2		N	
15	A-MONIT3	3		N	
16	A-MONIT4	4		N	
17	EX-ENLDA	5		N	
18	EXT-DATA	8		N	
19	EX-ENMTX	9		N	
20	EXT-CLK	7		N	

ELM 3
CONN. VU PANEL, AUDIO

PNT	SIGNAL NAME	COLOR	LV	TYPE	F
1	A-LVINA1	9		N	
2	A-LVINB1	6		N	
3	A-LVINC1	S		N	
4	A-LVOUA1	9		N	
5	A-LVOUB1	6		N	
6	A-LVOUC1	S		N	
8	A-LVINA2	9		N	
9	A-LVINB2	6		N	
10	A-LVINC2	S		N	
12	A-LVOUA2	9		N	
13	A-LVOUB2	6		N	
14	A-LVOUC2	S		N	

./.

GRP 94 1.727.940.00
<-- <-- <-- CONTINUATION

ELM 4
CONN. VU PANEL, AUDIO

PNT	SIGNAL NAME	COLOR	LV	TYPE	F
1	A-LVINA3	9		N	
2	A-LVINB3	6		N	
3	A-LVINC3	S		N	
4	A-LVOUA3	9		N	
5	A-LVOUB3	6		N	
6	A-LVOUC3	S		N	
8	A-LVINA4	9		N	
9	A-LVINB4	6		N	
10	A-LVINC4	S		N	
12	A-LVOUA4	9		N	
13	A-LVOUB4	6		N	
14	A-LVOUC4	S		N	

* STUDER REVOX AG * S I G N A L W I R E L I S T * 91/07/18 * 17:00 * P A G E 37 *
* 1.807.060.00 * STUDER A 807 TAPE RECORDER 4 CH * * 91/07/10 - 00 *

SIGNAL NAME	COLOR	MI	ASY	GRP	ELM	PNT	S	LV	TYPE	DESCRIPTION OF ELEMENT		REMARK	ELEMENT NR.
0-MOTFL				11	7	1			N	CONN. SP. MOTOR FILTER, LEFT	J07		
				11	8	7			N	CONN. SP. MOTOR FILTER, RIGHT	J08		
				12	1	1			N	CONN. SP. MOTOR CTL,	P01		
				12	2	7			N	CONN. SP. MOTOR CTL,	P02		
0-MOVES	0			10	3	1			N	CONN. MOVE SENSOR	J03		
	0			24	1	2			N	CONN. TAPE DECK CTL. J03			
0-MSPLY	0			7	1	2			L	CHARGE CAPACITOR CHC1			
	0			8	1	4			J	RECTIFIER DZ2			
	0			11	9	2			Y	CONN. SP. MOTOR SUPPLY,	P1, P2		
	0			20	5	2			Y	CONN. CAPSTAN MOTOR SUPPLY	P1, P2		
0-TACH1	0			11	5	1			N	CONN. SP. MOTOR TACHO, LEFT	J05		
	0			17	1	1			N	CONN. SP. MOTOR CTL, J05			
0-TACH2	0			11	4	1			N	CONN. SP. MOTOR TACHO, RIGHT	J04		
	0			18	1	1			N	CONN. SP. MOTOR CTL, J04			
0-TTA	1			11	1	1			N	CONN. TAPE TENS. ADJUSTMENT	J01		
	1			14	1	11			N	CONN. SP. MOTOR CTL, J01			
0-TTS	0			11	2	1			N	CONN. TAPE TENS. SENSOR	J02		
	0			13	1	1			N	CONN. SP. MOTOR CTL, J02			
17VAC	3			6	4	3			N	CONN. TAPE DECK ELECTRONICS	J04		
	3			10	1	1			C	CONNECTOR POWER SUPPLY	J01		
+0.0V	0			1	3	9			B	SERIAL CTL. CONNECTOR			
	0			1	4	9			B	TC REMOTE DISPLAY CONNECTOR			
	8			1	6	1			B	PARALLEL REMOTE CONNECTOR			
	8			1	7	1			B	SYNCHRONIZER CONNECTOR			
	5			1	7	14			B	SYNCHRONIZER CONNECTOR			
	1			6	4	16			N	CONN. TAPE DECK ELECTRONICS	J04		
	4			6	4	17			N	CONN. TAPE DECK ELECTRONICS	J04		
	0			6	4	18			N	CONN. TAPE DECK ELECTRONICS	J04		
	0			10	1	5			C	CONNECTOR POWER SUPPLY	J01		
	4			10	1	7			C	CONNECTOR POWER SUPPLY	J01		
	1			10	1	9			C	CONNECTOR POWER SUPPLY	J01		
	0			10	4	3			B	CONN. SERIAL CTL.	J04		
	8			10	11	8			N	CONN. PARALLEL REMOTE A	J11		
	8			10	13	8			N	CONN. SYNCHRONIZER A	J13		
	5			10	13	15			N	CONN. SYNCHRONIZER A	J13		
	0			20	2	1			N	CONN. VARI SPEED CTL.	J02		
	0			20	3	10			N	CONN. CAPSTAN TACHO	J03		
	2			21	2	11			N	CONN. CAPSTAN CTL, J03			
	0			35	7	1			L	VARIO SPEED POTM.			
	8			51	11	8			N	CONN. PARALLEL REMOTE A	J11		
	0			70	4	2			N	CONN. TAPE DECK SERIAL CTL.	J04		
	0			70	5	3			N	CONN. RS 232	J05		
	0			70	6	1			N	CONN. REMOTE DISPLAY	J06		
				70	10	21				CONN. TIME CODE WRITE/READ UNIT	J10		
				70	21	21				TIME CODE WRITE/READ UNIT			

* STUDER REVOX AG * S I G N A L W I R E L I S T * 91/07/18 * 17:00 * P A G E 38 *
* 1.807.060.00 * STUDER A 807 TAPE RECORDER 4 CH * * 91/07/10 - 00 *

SIGNAL NAME	COLOR	MI	ASY	GRP	ELM	PNT	S	LV	TYPE	DESCRIPTION OF ELEMENT		REMARK	ELEMENT NR.
+0.0VA	0			1	8	14			B	CONN. EXT. VU PANEL, CTL			
	0			10	2	13			N	CONN. CAPSTAN CTL.	J02		
	0			10	6	18			N	CONN. SPOOLING MOTOR CTL.	J06		
				10	8	12			N	CONN. EXT. VU-PANEL	J08		
	0			10	9	16			N	CONN. COMMAND PANEL	J09		
	0			10	10	13			N	CONN. AUDIO CTL.	J10		
	0			11	3	12			N	CONN. TAPE DECK CTL.	J03		
	0			20	1	9			N	CONN. TAPE DECK CTL.	J01		
	0			30	3	19			D	CONN. TAPE DECK CTL. J10			
	0			36	1	1			L	CONN. HEAD PHONES			
	0			36	2	1			N	CONN. MONITOR SWITCH			
				37	1	1			L	MONITOR VOLUME POTM.			
	0			37	1	4			L	MONITOR VOLUME POTM.			
				37	1	7			L	MONITOR VOLUME POTM.			
	0			40	3	20			N	CONN. AUDIO CONTROL	J03		
	0			40	5	14			N	CONN. MONITOR	J05		
	0			40	5	15			N	CONN. MONITOR	J05		
	0			40	6	2			N	CONN. VU METER	J06		
				40	13	11			N	CONN. AUDIO ELECTRONICS CH1			
				40	15	4			N	CONN. INSERT, INPUT CIRCUIT	J15		
				40	23	11			N	CONN. AUDIO ELECTRONICS CH2			
				40	33	11			N	CONN. AUDIO ELECTRONICS CH3			
				40	35	4			N	CONN. INSERT, INPUT CIRCUIT	J35		
				40	43	11			N	CONN. AUDIO ELECTRONICS CH4			
				41	2	8			N	CONN. MIC AND LINE INPUTS, CH1			
				41	13	11			N	CONN. AUDIO CTL, J23			
				42	2	8			N	CONN. MIC AND LINE INPUTS, CH2			
				42	13	11			N	CONN. AUDIO CTL, J43			
				43	2	8			N	CONN. MIC AND LINE INPUTS, CH3			
				43	13	11			N	CONN. AUDIO CTL, J23			
				44	2	8			N	CONN. MIC AND LINE INPUTS, CH4			
				44	13	11			N	CONN. AUDIO CTL, J23			
				47	1	20			N	CONN. TO AUDIO CONTROL J03			
				47	3	20			N	CONN. NRS CONTROL J3			
	0			51	9	16			N	CONN. COMMAND PANEL	J09		
	0			70	2	20			N	CONN. AUDIO CONTROL	J02		
	0			94	1	7			N	CONN. VU PANEL, CTL			
+0.0VD	0			1	5	15			B	NRS CONTROL CONNECTOR			
	0			1	8	1			B	CONN. EXT. VU PANEL, CTL			
	0			1	10	1			B	AUDIO REMOTE CONTROL CONN.			
	0			1	10	8			B	AUDIO REMOTE CONTROL CONN.			
	0			10	2	14			N	CONN. CAPSTAN CTL.	J02		
	0			10	6	17			N	CONN. SPOOLING MOTOR CTL.	J06		
	0			10	8	14			N	CONN. EXT. VU-PANEL	J08		
	0			10	9	18			N	CONN. COMMAND PANEL	J09		
	0			10	10	11			N	CONN. AUDIO CTL.	J10		
	0			11	3	18			N	CONN. TAPE DECK CTL.	J03		
	0			20	1	7			N	CONN. TAPE DECK CTL.	J01		
				30	2	1			N	CONN. DISPLAY EL.			
	0			30	3	16			D	CONN. TAPE DECK CTL. J10			
				30	4	19			N	CONN. KEYS MATRIX			
				31	2	1			N	CONN. COMMAND PANEL J02			
	0			40	2	9			N	CONN. TAPE DECK ELECTRONICS	J02		
				40	2	18			N	CONN. TAPE DECK ELECTRONICS	J02		

```
*****************************************************************************************************************************
*    STUDER REVOX AG    *    S I G N A L     W I R E     L I S T              * 91/07/18 * 17:00 *   P A G E  39   *
*****************************************************************************************************************************
*             1.807.060.00  * STUDER  A 807 TAPE RECORDER 4 CH *              * 91/07/10 - 00                              *
*****************************************************************************************************************************
```

SIGNAL NAME	COLOR	MI	ASY	GRP	ELM	PNT	S	LV	TYPE	DESCRIPTION OF ELEMENT		REMARK	ELEMENT NR.
<<-- CONT.OF	1			40	3	1			N	CONN. AUDIO CONTROL	J03		
+0.0VD				40	12	12			N	CONN. AUDIO ELECTRONICS CH1			
				40	13	13			N	CONN. AUDIO ELECTRONICS CH1			
				40	15	2			N	CONN. INSERT, INPUT CIRCUIT	J15		
				40	22	12			N	CONN. AUDIO ELECTRONICS CH2			
				40	23	13			N	CONN. AUDIO ELECTRONICS CH2			
				40	32	12			N	CONN. AUDIO ELECTRONICS CH3			
				40	33	13			N	CONN. AUDIO ELECTRONICS CH3			
				40	35	2			N	CONN. INSERT, INPUT CIRCUIT	J35		
				40	42	12			N	CONN. AUDIO ELECTRONICS CH4			
				40	43	13			N	CONN. AUDIO ELECTRONICS CH4			
				41	12	12			N	CONN. AUDIO CTL, J22			
				41	13	13			N	CONN. AUDIO CTL, J23			
				42	12	12			N	CONN. AUDIO CTL, J42			
				42	13	13			N	CONN. AUDIO CTL, J43			
				43	12	12			N	CONN. AUDIO CTL, J22			
				43	13	13			N	CONN. AUDIO CTL, J23			
				44	12	12			N	CONN. AUDIO CTL, J22			
				44	13	13			N	CONN. AUDIO CTL, J23			
				47	1	1			N	CONN. TO AUDIO CONTROL J03			
				47	3	1			N	CONN. NRS CONTROL J3			
	0			47	5	1			N	CONN. NRS CONTROL J2			
	0			51	1	7			N	AUDIO REMOTE CONTROL IF.			
	0			51	1	8			N	AUDIO REMOTE CONTROL IF.			
	0			51	9	18			N	CONN. COMMAND PANEL	J09		
	1			70	2	1			N	CONN. AUDIO CONTROL	J02		
	0			94	1	2			N	CONN. VU PANEL, CTL			
+1.2V	2			20	3	11			N	CONN. CAPSTAN TACHO	J03		
	0			21	2	10			N	CONN. CAPSTAN CTL, J03			
+15.0V	2			10	2	12			N	CONN. CAPSTAN CTL.	J02		
	2			10	6	20			N	CONN. SPOOLING MOTOR CTL.	J06		
				10	8	10			N	CONN. EXT. VU-PANEL	J08		
	2			10	9	14			N	CONN. COMMAND PANEL	J09		
	2			10	10	14			N	CONN. AUDIO CTL.	J10		
	2			11	2	5			N	CONN. TAPE TENS. SENSOR	J02		
	2			11	3	16			N	CONN. TAPE DECK CTL.	J03		
	2			13	1	3			N	CONN. SP. MOTOR CTL, J02			
	2			20	1	8			N	CONN. TAPE DECK CTL.	J01		
	2			20	2	4			N	CONN. VARI SPEED CTL.	J02		
	2			30	3	18			D	CONN. TAPE DECK CTL. J10			
	2			35	7	3			L	VARIO SPEED POTM.			
				41	13	1			N	CONN. AUDIO CTL, J23			
				42	13	1			N	CONN. AUDIO CTL, J43			
				43	13	1			N	CONN. AUDIO CTL, J23			
				44	13	1			N	CONN. AUDIO CTL, J23			
				47	1	18			N	CONN. TO AUDIO CONTROL J03			
				47	3	18			N	CONN. NRS CONTROL J3			
	2			51	9	14			N	CONN. COMMAND PANEL	J09		
	2			94	1	5			N	CONN. VU PANEL, CTL			

```
*****************************************************************************************************************************
*    STUDER REVOX AG    *    S I G N A L     W I R E     L I S T              * 91/07/18 * 17:00 *   P A G E  40   *
*****************************************************************************************************************************
*             1.807.060.00  * STUDER  A 807 TAPE RECORDER 4 CH *              * 91/07/10 - 00                              *
*****************************************************************************************************************************
```

SIGNAL NAME	COLOR	MI	ASY	GRP	ELM	PNT	S	LV	TYPE	DESCRIPTION OF ELEMENT		REMARK	ELEMENT NR.
+15.0VA	8			40	3	18			N	CONN. AUDIO CONTROL	J03		
				40	13	1			N	CONN. AUDIO ELECTRONICS CH1			
				40	15	3			N	CONN. INSERT, INPUT CIRCUIT	J15		
				40	23	1			N	CONN. AUDIO ELECTRONICS CH2			
	8			70	2	18			N	CONN. AUDIO CONTROL	J02		
				70	10	22				CONN. TIME CODE WRITE/READ UNIT	J10		
				70	21	22				TIME CODE WRITE/READ UNIT			
+15.0VB	2			1	8	3			B	CONN. EXT. VU PANEL, CTL			
	2			40	6	1			N	CONN. VU METER	J06		
				40	33	1			N	CONN. AUDIO ELECTRONICS CH3			
				40	35	3			N	CONN. INSERT, INPUT CIRCUIT	J35		
				40	43	1			N	CONN. AUDIO ELECTRONICS CH4			
+20.0V				6	4	1				CONN. TAPE DECK ELECTRONICS	J04		
	2			6	4	14			N	CONN. TAPE DECK ELECTRONICS	J04		
	2			10	1	6			C	CONNECTOR POWER SUPPLY	J01		
+24.0V	7			1	5	14			B	NRS CONTROL CONNECTOR			
				6	4	6			N	CONN. TAPE DECK ELECTRONICS	J04		
				6	4	7			N	CONN. TAPE DECK ELECTRONICS	J04		
	7			6	4	8			N	CONN. TAPE DECK ELECTRONICS	J04		
	7			6	4	9			N	CONN. TAPE DECK ELECTRONICS	J04		
	7			6	4	10			N	CONN. TAPE DECK ELECTRONICS	J04		
	7			6	4	11			N	CONN. TAPE DECK ELECTRONICS	J04		
	7			6	4	12			N	CONN. TAPE DECK ELECTRONICS	J04		
	7			6	4	13			N	CONN. TAPE DECK ELECTRONICS	J04		
	7			10	1	10			C	CONNECTOR POWER SUPPLY	J01		
	7			25	1	2			X	CONN. TAPE DECK CTL. J07			
	7			26	1	1			X	CONN. TAPE DECK CTL. J07			
	7			27	1	1			X	CONN. TAPE DECK CTL. J07			
+24V-RMT	8			1	3	5			B	SERIAL CTL. CONNECTOR			
	7			1	4	5			B	TC REMOTE DISPLAY CONNECTOR			
	0			1	6	25			B	PARALLEL REMOTE CONNECTOR			
	9			1	7	25			B	SYNCHRONIZER CONNECTOR			
	7			1	10	15			B	AUDIO REMOTE CONTROL CONN.			
	8			6	4	4			N	CONN. TAPE DECK ELECTRONICS	J04		
	8			10	1	3			C	CONNECTOR POWER SUPPLY	J01		
	8			10	4	4			B	CONN. SERIAL CTL.	J04		
	0			10	12	10			N	CONN. PARALLEL REMOTE B	J12		
	9			10	14	9			N	CONN. SYNCHRONIZER B	J14		
	7			51	1	6			N	AUDIO REMOTE CONTROL IF.			
	0			51	12	10			N	CONN. PARALLEL REMOTE B	J12		
	8			70	4	4			N	CONN. TAPE DECK SERIAL CTL.	J04		
	8			70	5	4			N	CONN. RS 232	J05		
	7			70	6	4			N	CONN. REMOTE DISPLAY	J06		
+48.0V	7			10	10	12			N	CONN. AUDIO CTL.	J10		
				40	11	1			N	CONN. AUDIO ELECTRONICS CH1			
				40	21	1			N	CONN. AUDIO ELECTRONICS CH2			
				40	31	1			N	CONN. AUDIO ELECTRONICS CH3			
				40	41	1			N	CONN. AUDIO ELECTRONICS CH4			
				41	11	1			N	CONN. AUDIO CTL, J21			
				42	11	1			N	CONN. AUDIO CTL, J41			

* STUDER REVOX AG * S I G N A L W I R E L I S T * 91/07/18 * 17:00 * P A G E 41 *
* 1.807.060.00 * STUDER A 807 TAPE RECORDER 4 CH * * 91/07/10 - 00 *

SIGNAL NAME	COLOR	MI	ASY GRP	ELM	PNT	S	LV	TYPE	DESCRIPTION OF ELEMENT		REMARK	ELEMENT NR.
<<-- CONT.OF			43	11	1			N	CONN. AUDIO CTL, J21			
+48.0V			44	11	1			N	CONN. AUDIO CTL, J21			
+5.0V	5		10	3	2			N	CONN. MOVE SENSOR	J03		
	5		11	4	2			N	CONN. SP. MOTOR TACHO, RIGHT	J04		
	5		11	5	3			N	CONN. SP. MOTOR TACHO, LEFT	J05		
	5		17	1	2			N	CONN. SP. MOTOR CTL, J05			
	5		18	1	2			N	CONN. SP. MOTOR CTL, J04			
	5		24	1	5			N	CONN. TAPE DECK CTL. J03			
			47	1	2			N	CONN. TO AUDIO CONTROL J03			
			47	3	2			N	CONN. NRS CONTROL J3			
+5.0VA	2		36	2	7			N	CONN. MONITOR SWITCH			
			40	2	20			N	CONN. TAPE DECK ELECTRONICS	J02		
			40	3	2			N	CONN. AUDIO CONTROL	J03		
	2		40	5	12			N	CONN. MONITOR	J05		
			40	12	6			N	CONN. AUDIO ELECTRONICS CH1			
			40	13	12			N	CONN. AUDIO ELECTRONICS CH1			
			40	15	1			N	CONN. INSERT, INPUT CIRCUIT	J15		
			40	22	6			N	CONN. AUDIO ELECTRONICS CH2			
			40	23	12			N	CONN. AUDIO ELECTRONICS CH2			
			40	32	6			N	CONN. AUDIO ELECTRONICS CH3			
			40	33	12			N	CONN. AUDIO ELECTRONICS CH3			
			40	35	1			N	CONN. INSERT, INPUT CIRCUIT	J35		
			40	42	6			N	CONN. AUDIO ELECTRONICS CH4			
			40	43	12			N	CONN. AUDIO ELECTRONICS CH4			
			41	12	6			N	CONN. AUDIO CTL, J22			
			41	13	12			N	CONN. AUDIO CTL, J23			
			42	12	6			N	CONN. AUDIO CTL, J42			
			42	13	12			N	CONN. AUDIO CTL, J43			
			43	12	6			N	CONN. AUDIO CTL, J22			
			43	13	12			N	CONN. AUDIO CTL, J23			
			44	12	6			N	CONN. AUDIO CTL, J22			
			44	13	12			N	CONN. AUDIO CTL, J23			
+5.0VMF			11	7	6			N	CONN. SP. MOTOR FILTER, LEFT	J07		
			12	1	6			N	CONN. SP. MOTOR CTL,	P01		
+5.6V	5		1	8	2			B	CONN. EXT. VU PANEL, CTL			
	5		10	2	15			N	CONN. CAPSTAN CTL.	J02		
	5		10	6	16			N	CONN. SPOOLING MOTOR CTL.	J06		
	3		10	8	13			N	CONN. EXT. VU-PANEL	J08		
	5		10	9	17			N	CONN. COMMAND PANEL	J09		
	5		10	10	10			N	CONN. AUDIO CTL.	J10		
	5		11	3	19			N	CONN. TAPE DECK CTL.	J03		
	5		20	1	6			N	CONN. TAPE DECK CTL.	J01		
			30	2	5			N	CONN. DISPLAY EL.			
	5		30	3	17			D	CONN. TAPE DECK CTL. J10			
			30	4	20			N	CONN. KEYS MATRIX			
			31	2	5			N	CONN. COMMAND PANEL J02			
	5		40	2	10			N	CONN. TAPE DECK ELECTRONICS	J02		
	9		40	3	9			N	CONN. AUDIO CONTROL	J03		
			47	1	9			N	CONN. TO AUDIO CONTROL J03			
			47	3	9			N	CONN. NRS CONTROL J3			

* STUDER REVOX AG * S I G N A L W I R E L I S T * 91/07/18 * 17:00 * P A G E 42 *
* 1.807.060.00 * STUDER A 807 TAPE RECORDER 4 CH * * 91/07/10 - 00 *

SIGNAL NAME	COLOR	MI	ASY GRP	ELM	PNT	S	LV	TYPE	DESCRIPTION OF ELEMENT		REMARK	ELEMENT NR.
<<-- CONT.OF	5		51	9	17			N	CONN. COMMAND PANEL	J09		
+5.6V	9		70	2	9			N	CONN. AUDIO CONTROL	J02		
			70	10	24				CONN. TIME CODE WRITE/READ UNIT	J10		
			70	21	24				TIME CODE WRITE/READ UNIT			
	3		94	1	1			N	CONN. VU PANEL, CTL			
+50.0V	2		7	1	1			L	CHARGE CAPACITOR CHC1			
	2		8	1	3			J	RECTIFIER DZ2			
	2		11	9	1			Y	CONN. SP. MOTOR SUPPLY,	P1, P2		
	2		20	5	1			Y	CONN. CAPSTAN MOTOR SUPPLY	P1, P2		
+60.0V	5		6	4	2			N	CONN. TAPE DECK ELECTRONICS	J04		
	5		10	1	8			C	CONNECTOR POWER SUPPLY	J01		
-15.0V	6		10	2	11			N	CONN. CAPSTAN CTL.	J02		
	6		10	6	19			N	CONN. SPOOLING MOTOR CTL.	J06		
			10	8	11			N	CONN. EXT. VU-PANEL	J08		
	6		10	9	15			N	CONN. COMMAND PANEL	J09		
	6		10	10	15			N	CONN. AUDIO CTL.	J10		
	6		11	2	3			N	CONN. TAPE TENS. SENSOR	J02		
	6		11	3	10			N	CONN. TAPE DECK CTL.	J03		
	6		13	1	4			N	CONN. SP. MOTOR CTL, J02			
	6		20	1	10			N	CONN. TAPE DECK CTL.	J01		
	6		30	3	20			D	CONN. TAPE DECK CTL. J10			
			41	13	2			N	CONN. AUDIO CTL, J23			
			42	13	2			N	CONN. AUDIO CTL, J43			
			43	13	2			N	CONN. AUDIO CTL, J23			
			44	13	2			N	CONN. AUDIO CTL, J23			
			47	1	19			N	CONN. TO AUDIO CONTROL J03			
			47	3	19			N	CONN. NRS CONTROL J3			
	6		51	9	15			N	CONN. COMMAND PANEL	J09		
	6		94	1	8			N	CONN. VU PANEL, CTL			
-15.0VA	9		40	3	19			N	CONN. AUDIO CONTROL	J03		
			40	13	2			N	CONN. AUDIO ELECTRONICS CH1			
			40	15	5			N	CONN. INSERT, INPUT CIRCUIT	J15		
			40	23	2			N	CONN. AUDIO ELECTRONICS CH2			
	9		70	2	19			N	CONN. AUDIO CONTROL	J02		
			70	10	23				CONN. TIME CODE WRITE/READ UNIT	J10		
			70	21	23				TIME CODE WRITE/READ UNIT			
-15.0VB	6		1	8	16			B	CONN. EXT. VU PANEL, CTL			
	6		40	6	3			N	CONN. VU METER	J06		
			40	33	2			N	CONN. AUDIO ELECTRONICS CH3			
			40	35	5			N	CONN. INSERT, INPUT CIRCUIT	J35		
			40	43	2			N	CONN. AUDIO ELECTRONICS CH4			
-20.0V	6		6	4	15			N	CONN. TAPE DECK ELECTRONICS	J04		
	6		10	1	4			C	CONNECTOR POWER SUPPLY	J01		
A LVOUA1	9		1	9	4			A	CONN. EXT. VU PANEL, AUDIO			
A LVOUA2	9		1	9	11			A	CONN. EXT. VU PANEL, AUDIO			
A LVOUA3	9		1	9	17			A	CONN. EXT. VU PANEL, AUDIO			

```
*****************************************************************************************************************************
*    STUDER REVOX AG   *    S I G N A L    W I R E    L I S T              * 91/07/18 * 17:00 *   P A G E  43   *
*****************************************************************************************************************************
*            1.807.060.00  * STUDER  A 807 TAPE RECORDER 4 CH *             * 91/07/10 - 00                              *
*****************************************************************************************************************************
```

SIGNAL NAME	COLOR	MI	ASY	GRP	ELM	PNT	S	LV	TYPE	DESCRIPTION OF ELEMENT	REMARK	ELEMENT NR.
A LVOUB4	6			1	9	24			A	CONN. EXT. VU PANEL, AUDIO		
A LVOUC2	S			1	9	13			A	CONN. EXT. VU PANEL, AUDIO		
A-CTALK1				40	13	10			N	CONN. AUDIO ELECTRONICS CH1		
				41	13	10			N	CONN. AUDIO CTL, J23		
A-CTALK2				40	23	10			N	CONN. AUDIO ELECTRONICS CH2		
				42	13	10			N	CONN. AUDIO CTL, J43		
A-CTALK3				40	33	10			N	CONN. AUDIO ELECTRONICS CH3		
				43	13	10			N	CONN. AUDIO CTL, J23		
A-CTALK4				40	43	10			N	CONN. AUDIO ELECTRONICS CH4		
				44	13	10			N	CONN. AUDIO CTL, J23		
A-DRVIN1				40	14	12			N	CONN. AUDIO ELECTRONICS CH1		
				40	16	1			N	CONN. INSERT, OUTPUT CIRCUIT	J16	
				41	14	12			N	CONN. AUDIO CTL, J24		
A-DRVIN2				40	16	5			N	CONN. INSERT, OUTPUT CIRCUIT	J16	
				40	24	12			N	CONN. AUDIO ELECTRONICS CH2		
				42	14	12			N	CONN. AUDIO CTL, J44		
A-DRVIN3				40	34	12			N	CONN. AUDIO ELECTRONICS CH3		
				40	36	1			N	CONN. INSERT, OUTPUT CIRCUIT	J36	
				43	14	12			N	CONN. AUDIO CTL, J24		
A-DRVIN4				40	36	5			N	CONN. INSERT, OUTPUT CIRCUIT	J36	
				40	44	12			N	CONN. AUDIO ELECTRONICS CH1		
				44	14	12			N	CONN. AUDIO CTL, J24		
A-D0				40	12	8			N	CONN. AUDIO ELECTRONICS CH1		
				40	14	1			N	CONN. AUDIO ELECTRONICS CH1		
				40	22	8			N	CONN. AUDIO ELECTRONICS CH2		
				40	24	1			N	CONN. AUDIO ELECTRONICS CH2		
				40	32	8			N	CONN. AUDIO ELECTRONICS CH3		
				40	34	1			N	CONN. AUDIO ELECTRONICS CH3		
				40	42	8			N	CONN. AUDIO ELECTRONICS CH4		
				40	44	1			N	CONN. AUDIO ELECTRONICS CH1		
				41	12	8			N	CONN. AUDIO CTL, J22		
				41	14	1			N	CONN. AUDIO CTL, J24		
				42	12	8			N	CONN. AUDIO CTL, J42		
				42	14	1			N	CONN. AUDIO CTL, J44		
				43	12	8			N	CONN. AUDIO CTL, J22		
				43	14	1			N	CONN. AUDIO CTL, J24		
				44	12	8			N	CONN. AUDIO CTL, J22		
				44	14	1			N	CONN. AUDIO CTL, J24		
A-D1				40	12	9			N	CONN. AUDIO ELECTRONICS CH1		
				40	14	2			N	CONN. AUDIO ELECTRONICS CH1		
				40	22	9			N	CONN. AUDIO ELECTRONICS CH2		
				40	24	2			N	CONN. AUDIO ELECTRONICS CH2		
				40	32	9			N	CONN. AUDIO ELECTRONICS CH3		
				40	34	2			N	CONN. AUDIO ELECTRONICS CH3		

```
*****************************************************************************************************************************
*    STUDER REVOX AG   *    S I G N A L    W I R E    L I S T              * 91/07/18 * 17:00 *   P A G E  44   *
*****************************************************************************************************************************
*            1.807.060.00  * STUDER  A 807 TAPE RECORDER 4 CH *             * 91/07/10 - 00                              *
*****************************************************************************************************************************
```

SIGNAL NAME	COLOR	MI	ASY	GRP	ELM	PNT	S	LV	TYPE	DESCRIPTION OF ELEMENT	REMARK	ELEMENT NR.
<<-- CONT.OF				40	42	9			N	CONN. AUDIO ELECTRONICS CH4		
A-D1				40	44	2			N	CONN. AUDIO ELECTRONICS CH1		
				41	12	9			N	CONN. AUDIO CTL, J22		
				41	14	2			N	CONN. AUDIO CTL, J24		
				42	12	9			N	CONN. AUDIO CTL, J42		
				42	14	2			N	CONN. AUDIO CTL, J44		
				43	12	9			N	CONN. AUDIO CTL, J22		
				43	14	2			N	CONN. AUDIO CTL, J24		
				44	12	9			N	CONN. AUDIO CTL, J22		
				44	14	2			N	CONN. AUDIO CTL, J24		
A-D2				40	12	10			N	CONN. AUDIO ELECTRONICS CH1		
				40	14	3			N	CONN. AUDIO ELECTRONICS CH1		
				40	22	10			N	CONN. AUDIO ELECTRONICS CH2		
				40	24	3			N	CONN. AUDIO ELECTRONICS CH2		
				40	32	10			N	CONN. AUDIO ELECTRONICS CH3		
				40	34	3			N	CONN. AUDIO ELECTRONICS CH3		
				40	42	10			N	CONN. AUDIO ELECTRONICS CH4		
				40	44	3			N	CONN. AUDIO ELECTRONICS CH1		
				41	12	10			N	CONN. AUDIO CTL, J22		
				41	14	3			N	CONN. AUDIO CTL, J24		
				42	12	10			N	CONN. AUDIO CTL, J42		
				42	14	3			N	CONN. AUDIO CTL, J44		
				43	12	10			N	CONN. AUDIO CTL, J22		
				43	14	3			N	CONN. AUDIO CTL, J24		
				44	12	10			N	CONN. AUDIO CTL, J22		
				44	14	3			N	CONN. AUDIO CTL, J24		
A-D3				40	12	11			N	CONN. AUDIO ELECTRONICS CH1		
				40	14	4			N	CONN. AUDIO ELECTRONICS CH1		
				40	22	11			N	CONN. AUDIO ELECTRONICS CH2		
				40	24	4			N	CONN. AUDIO ELECTRONICS CH2		
				40	32	11			N	CONN. AUDIO ELECTRONICS CH3		
				40	34	4			N	CONN. AUDIO ELECTRONICS CH3		
				40	42	11			N	CONN. AUDIO ELECTRONICS CH4		
				40	44	4			N	CONN. AUDIO ELECTRONICS CH1		
				41	12	11			N	CONN. AUDIO CTL, J22		
				41	14	4			N	CONN. AUDIO CTL, J24		
				42	12	11			N	CONN. AUDIO CTL, J42		
				42	14	4			N	CONN. AUDIO CTL, J44		
				43	12	11			N	CONN. AUDIO CTL, J22		
				43	14	4			N	CONN. AUDIO CTL, J24		
				44	12	11			N	CONN. AUDIO CTL, J22		
				44	14	4			N	CONN. AUDIO CTL, J24		
A-D4				40	12	15			N	CONN. AUDIO ELECTRONICS CH1		
				40	14	7			N	CONN. AUDIO ELECTRONICS CH1		
				40	22	15			N	CONN. AUDIO ELECTRONICS CH2		
				40	24	7			N	CONN. AUDIO ELECTRONICS CH2		
				40	32	15			N	CONN. AUDIO ELECTRONICS CH3		
				40	34	7			N	CONN. AUDIO ELECTRONICS CH3		
				40	42	15			N	CONN. AUDIO ELECTRONICS CH4		
				40	44	7			N	CONN. AUDIO ELECTRONICS CH1		
				41	12	15			N	CONN. AUDIO CTL, J22		

* STUDER REVOX AG * S I G N A L W I R E L I S T * 91/07/18 * 17:00 * P A G E 45 *
* 1.807.060.00 * STUDER A 807 TAPE RECORDER 4 CH * * 91/07/10 - 00 *

SIGNAL NAME	COLOR	MI	ASY	GRP	ELM	PNT	S	LV	TYPE	DESCRIPTION OF ELEMENT	REMARK	ELEMENT NR.
<<-- CONT.OF			41	14	7				N	CONN. AUDIO CTL, J24		
A-D4			42	12	15				N	CONN. AUDIO CTL, J42		
			42	14	7				N	CONN. AUDIO CTL, J44		
			43	12	15				N	CONN. AUDIO CTL, J22		
			43	14	7				N	CONN. AUDIO CTL, J24		
			44	12	15				N	CONN. AUDIO CTL, J22		
			44	14	7				N	CONN. AUDIO CTL, J24		
A-D5			40	12	16				N	CONN. AUDIO ELECTRONICS CH1		
			40	14	8				N	CONN. AUDIO ELECTRONICS CH1		
			40	22	16				N	CONN. AUDIO ELECTRONICS CH2		
			40	24	8				N	CONN. AUDIO ELECTRONICS CH2		
			40	32	16				N	CONN. AUDIO ELECTRONICS CH3		
			40	34	8				N	CONN. AUDIO ELECTRONICS CH3		
			40	42	16				N	CONN. AUDIO ELECTRONICS CH4		
			40	44	8				N	CONN. AUDIO ELECTRONICS CH1		
			41	12	16				N	CONN. AUDIO CTL, J22		
			41	14	8				N	CONN. AUDIO CTL, J24		
			42	12	16				N	CONN. AUDIO CTL, J42		
			42	14	8				N	CONN. AUDIO CTL, J44		
			43	12	16				N	CONN. AUDIO CTL, J22		
			43	14	8				N	CONN. AUDIO CTL, J24		
			44	12	16				N	CONN. AUDIO CTL, J22		
			44	14	8				N	CONN. AUDIO CTL, J24		
A-D6			40	12	17				N	CONN. AUDIO ELECTRONICS CH1		
			40	14	9				N	CONN. AUDIO ELECTRONICS CH1		
			40	22	17				N	CONN. AUDIO ELECTRONICS CH2		
			40	24	9				N	CONN. AUDIO ELECTRONICS CH2		
			40	32	17				N	CONN. AUDIO ELECTRONICS CH3		
			40	34	9				N	CONN. AUDIO ELECTRONICS CH3		
			40	42	17				N	CONN. AUDIO ELECTRONICS CH4		
			40	44	9				N	CONN. AUDIO ELECTRONICS CH1		
			41	12	17				N	CONN. AUDIO CTL, J22		
			41	14	9				N	CONN. AUDIO CTL, J24		
			42	12	17				N	CONN. AUDIO CTL, J42		
			42	14	9				N	CONN. AUDIO CTL, J44		
			43	12	17				N	CONN. AUDIO CTL, J22		
			43	14	9				N	CONN. AUDIO CTL, J24		
			44	12	17				N	CONN. AUDIO CTL, J22		
			44	14	9				N	CONN. AUDIO CTL, J24		
A-D7			40	12	18				N	CONN. AUDIO ELECTRONICS CH1		
			40	14	10				N	CONN. AUDIO ELECTRONICS CH1		
			40	22	18				N	CONN. AUDIO ELECTRONICS CH2		
			40	24	10				N	CONN. AUDIO ELECTRONICS CH2		
			40	32	18				N	CONN. AUDIO ELECTRONICS CH3		
			40	34	10				N	CONN. AUDIO ELECTRONICS CH3		
			40	42	18				N	CONN. AUDIO ELECTRONICS CH4		
			40	44	10				N	CONN. AUDIO ELECTRONICS CH1		
			41	12	18				N	CONN. AUDIO CTL, J22		
			41	14	10				N	CONN. AUDIO CTL, J24		
			42	12	18				N	CONN. AUDIO CTL, J42		
			42	14	10				N	CONN. AUDIO CTL, J44		

* STUDER REVOX AG * S I G N A L W I R E L I S T * 91/07/18 * 17:00 * P A G E 46 *
* 1.807.060.00 * STUDER A 807 TAPE RECORDER 4 CH * * 91/07/10 - 00 *

SIGNAL NAME	COLOR	MI	ASY	GRP	ELM	PNT	S	LV	TYPE	DESCRIPTION OF ELEMENT	REMARK	ELEMENT NR.
<<-- CONT.OF			43	12	18				N	CONN. AUDIO CTL, J22		
A-D7			43	14	10				N	CONN. AUDIO CTL, J24		
			44	12	18				N	CONN. AUDIO CTL, J22		
			44	14	10				N	CONN. AUDIO CTL, J24		
A-HFIN1			40	12	20				N	CONN. AUDIO ELECTRONICS CH1		
			41	12	20				N	CONN. AUDIO CTL, J22		
A-HFIN2			40	22	20				N	CONN. AUDIO ELECTRONICS CH2		
			42	12	20				N	CONN. AUDIO CTL, J42		
A-HFIN3			40	32	20				N	CONN. AUDIO ELECTRONICS CH3		
			43	12	20				N	CONN. AUDIO CTL, J22		
A-HFIN4			40	42	20				N	CONN. AUDIO ELECTRONICS CH4		
			44	12	20				N	CONN. AUDIO CTL, J22		
A-LINA1	9		1	14	2					CONN. LINE INPUT, CH1		
	9		41	2	1				N	CONN. MIC AND LINE INPUTS, CH1		
A-LINA2	9		1	16	2					CONN. LINE INPUT, CH2		
	9		42	2	1				N	CONN. MIC AND LINE INPUTS, CH2		
A-LINA3	9		1	18	2					CONN. LINE INPUT, CH3		
	9		43	2	1				N	CONN. MIC AND LINE INPUTS, CH3		
A-LINA4	9		1	20	2					CONN. LINE INPUT, CH4		
	9		44	2	1				N	CONN. MIC AND LINE INPUTS, CH4		
A-LINB1	6		1	14	3					CONN. LINE INPUT, CH1		
	6		41	2	2				N	CONN. MIC AND LINE INPUTS, CH1		
A-LINB2	6		1	16	3					CONN. LINE INPUT, CH2		
	6		42	2	2				N	CONN. MIC AND LINE INPUTS, CH2		
A-LINB3	6		1	18	3					CONN. LINE INPUT, CH3		
	6		43	2	2				N	CONN. MIC AND LINE INPUTS, CH3		
A-LINB4	6		1	20	3					CONN. LINE INPUT, CH4		
	6		44	2	2				N	CONN. MIC AND LINE INPUTS, CH4		
A-LINS1	S		1	14	1					CONN. LINE INPUT, CH1		
	S		41	2	3				N	CONN. MIC AND LINE INPUTS, CH1		
A-LINS2	S		1	16	1					CONN. LINE INPUT, CH2		
	S		42	2	3				N	CONN. MIC AND LINE INPUTS, CH2		
A-LINS3	S		1	18	1					CONN. LINE INPUT, CH3		
	S		43	2	3				N	CONN. MIC AND LINE INPUTS, CH3		
A-LINS4	S		1	20	1					CONN. LINE INPUT, CH4		
	S		44	2	3				N	CONN. MIC AND LINE INPUTS, CH4		
A-LOUTA1	2		1	13	2					CONN. LINE OUTPUT, CH1		
	2		41	7	2				N	CONN. LINE OUTPUT CONNECTOR, CH1		

* STUDER REVOX AG * S I G N A L W I R E L I S T * 91/07/18 * 17:00 * P A G E 47 *

* 1.807.060.00 * STUDER A 807 TAPE RECORDER 4 CH * * 91/07/10 - 00 *

SIGNAL NAME	COLOR	MI	ASY	GRP	ELM	PNT	S	LV	TYPE	DESCRIPTION OF ELEMENT	REMARK	ELEMENT NR.
A-LOUTA2	2		1	15	2					CONN. LINE OUTPUT, CH2		
	2		42	7	2				N	CONN. LINE OUTPUT CONNECTOR, CH2		
A-LOUTA3	2		1	17	2					CONN. LINE OUTPUT, CH3		
	2		43	7	2				N	CONN. LINE OUTPUT CONNECTOR, CH3		
A-LOUTA4	2		1	19	2					CONN. LINE OUTPUT, CH4		
	2		44	7	2				N	CONN. LINE OUTPUT CONNECTOR, CH4		
A-LOUTB1	3		1	13	3					CONN. LINE OUTPUT, CH1		
	3		41	7	1				N	CONN. LINE OUTPUT CONNECTOR, CH1		
A-LOUTB2	3		1	15	3					CONN. LINE OUTPUT, CH2		
	3		42	7	1				N	CONN. LINE OUTPUT CONNECTOR, CH2		
A-LOUTB3	3		1	17	3					CONN. LINE OUTPUT, CH3		
	3		43	7	1				N	CONN. LINE OUTPUT CONNECTOR, CH3		
A-LOUTB4	3		1	19	3					CONN. LINE OUTPUT, CH4		
	3		44	7	1				N	CONN. LINE OUTPUT CONNECTOR, CH4		
A-LOUTS1	S		1	13	1					CONN. LINE OUTPUT, CH1		
A-LOUTS2	S		1	15	1					CONN. LINE OUTPUT, CH2		
A-LOUTS3	S		1	17	1					CONN. LINE OUTPUT, CH3		
A-LOUTS4	S		1	19	1					CONN. LINE OUTPUT, CH4		
A-LSA	7		37	2	2				L	LOUDSPEAKER		
	7		40	5	17				N	CONN. MONITOR J05		
A-LSAMP1	3		36	1	5				L	CONN. HEAD PHONES		
	3		40	5	13				N	CONN. MONITOR J05		
A-LSAMP2	8		36	1	2				L	CONN. HEAD PHONES		
	8		40	5	18				N	CONN. MONITOR J05		
A-LSB	6		37	2	1				L	LOUDSPEAKER		
	6		40	5	16				N	CONN. MONITOR J05		
A-LVINA1	9		1	9	1				A	CONN. EXT. VU PANEL, AUDIO		
	9		41	3	1				N	CONN. LINE LEVEL POT, CH1		
	9		94	3	1				N	CONN. VU PANEL, AUDIO		
A-LVINA2	9		1	9	8				A	CONN. EXT. VU PANEL, AUDIO		
	9		42	3	1				N	CONN. LINE LEVEL POT, CH2		
	9		94	3	8				N	CONN. VU PANEL, AUDIO		
A-LVINA3	9		1	9	14				A	CONN. EXT. VU PANEL, AUDIO		
	9		43	3	1				N	CONN. LINE LEVEL POT, CH3		
	9		94	4	1				N	CONN. VU PANEL, AUDIO		
A-LVINA4	9		1	9	20				A	CONN. EXT. VU PANEL, AUDIO		
	9		44	3	1				N	CONN. LINE LEVEL POT, CH4		
	9		94	4	8				N	CONN. VU PANEL, AUDIO		

```
*****************************************************************************************************************************
*   STUDER REVOX AG   *    S I G N A L     W I R E     L I S T                 * 91/07/18 * 17:00 *   P A G E  48   *
*****************************************************************************************************************************
*            1.807.060.00  * STUDER  A 807 TAPE RECORDER 4 CH *                * 91/07/10 - 00                            *
*****************************************************************************************************************************
```

SIGNAL NAME	COLOR	MI	ASY	GRP	ELM	PNT	S	LV	TYPE	DESCRIPTION OF ELEMENT	REMARK	ELEMENT NR.
A-LVINB1	6			1	9	2			A	CONN. EXT. VU PANEL, AUDIO		
	6			41	3	2			N	CONN. LINE LEVEL POT, CH1		
	6			94	3	2			N	CONN. VU PANEL, AUDIO		
A-LVINB2	6			1	9	9			A	CONN. EXT. VU PANEL, AUDIO		
	6			42	3	2			N	CONN. LINE LEVEL POT, CH2		
	6			94	3	9			N	CONN. VU PANEL, AUDIO		
A-LVINB3	6			1	9	15			A	CONN. EXT. VU PANEL, AUDIO		
	6			43	3	2			N	CONN. LINE LEVEL POT, CH3		
	6			94	4	2			N	CONN. VU PANEL, AUDIO		
A-LVINB4	6			1	9	21			A	CONN. EXT. VU PANEL, AUDIO		
	6			44	3	2			N	CONN. LINE LEVEL POT, CH4		
	6			94	4	9			N	CONN. VU PANEL, AUDIO		
A-LVINC1	S			1	9	3			A	CONN. EXT. VU PANEL, AUDIO		
	0			41	3	4			N	CONN. LINE LEVEL POT, CH1		
	S			94	3	3			N	CONN. VU PANEL, AUDIO		
A-LVINC2	S			1	9	10			A	CONN. EXT. VU PANEL, AUDIO		
	0			42	3	4			N	CONN. LINE LEVEL POT, CH2		
	S			94	3	10			N	CONN. VU PANEL, AUDIO		
A-LVINC3	S			1	9	16			A	CONN. EXT. VU PANEL, AUDIO		
	0			43	3	4			N	CONN. LINE LEVEL POT, CH3		
	S			94	4	3			N	CONN. VU PANEL, AUDIO		
A-LVINC4	S			1	9	22			A	CONN. EXT. VU PANEL, AUDIO		
	0			44	3	4			N	CONN. LINE LEVEL POT, CH4		
	S			94	4	10			N	CONN. VU PANEL, AUDIO		
A-LVMIA1	9			41	1	1			N	CONN. MIC LEVEL POT, CH1		
A-LVMIA2	9			42	1	1			N	CONN. MIC LEVEL POT, CH2		
A-LVMIA3	9			43	1	1			N	CONN. MIC LEVEL POT, CH3		
A-LVMIA4	9			44	1	1			N	CONN. MIC LEVEL POT, CH4		
A-LVMIB1	6			41	1	3			N	CONN. MIC LEVEL POT, CH1		
A-LVMIB2	6			42	1	3			N	CONN. MIC LEVEL POT, CH2		
A-LVMIB3	6			43	1	3			N	CONN. MIC LEVEL POT, CH3		
A-LVMIB4	6			44	1	3			N	CONN. MIC LEVEL POT, CH4		
A-LVMIC1	S			41	1	4			N	CONN. MIC LEVEL POT, CH1		
A-LVMIC2	S			42	1	4			N	CONN. MIC LEVEL POT, CH2		
A-LVMIC3	S			43	1	4			N	CONN. MIC LEVEL POT, CH3		
A-LVMIC4	S			44	1	4			N	CONN. MIC LEVEL POT, CH4		

```
*****************************************************************************************************************
*   STUDER REVOX AG   *    S I G N A L    W I R E    L I S T                  *  91/07/18  *  17:00  *   P A G E  49   *
*****************************************************************************************************************
*            1.807.060.00  * STUDER  A 807 TAPE RECORDER 4 CH *                  *  91/07/10 - 00                    *
*****************************************************************************************************************
```

SIGNAL NAME	COLOR	MI	ASY	GRP	ELM	PNT	S	LV	TYPE	DESCRIPTION OF ELEMENT	REMARK	ELEMENT NR.
A-LVOUA1	9			41	6	1			N	CONN. OUTPUT LEVEL POT, CH1		
	9			94	3	4			N	CONN. VU PANEL, AUDIO		
A-LVOUA2	9			42	6	1			N	CONN. OUTPUT LEVEL POT, CH2		
	9			94	3	12			N	CONN. VU PANEL, AUDIO		
A-LVOUA3	9			43	6	1			N	CONN. OUTPUT LEVEL POT, CH3		
	9			94	4	4			N	CONN. VU PANEL, AUDIO		
A-LVOUA4	9			1	9	23			A	CONN. EXT. VU PANEL, AUDIO		
	9			44	6	1			N	CONN. OUTPUT LEVEL POT, CH4		
	9			94	4	12			N	CONN. VU PANEL, AUDIO		
A-LVOUB1	6			1	9	5			A	CONN. EXT. VU PANEL, AUDIO		
	6			41	6	3			N	CONN. OUTPUT LEVEL POT, CH1		
	6			94	3	5			N	CONN. VU PANEL, AUDIO		
A-LVOUB2	6			1	9	12			A	CONN. EXT. VU PANEL, AUDIO		
	6			42	6	3			N	CONN. OUTPUT LEVEL POT, CH2		
	6			94	3	13			N	CONN. VU PANEL, AUDIO		
A-LVOUB3	6			1	9	18			A	CONN. EXT. VU PANEL, AUDIO		
	6			43	6	3			N	CONN. OUTPUT LEVEL POT, CH3		
	6			94	4	5			N	CONN. VU PANEL, AUDIO		
A-LVOUB4	6			44	6	3			N	CONN. OUTPUT LEVEL POT, CH4		
	6			94	4	13			N	CONN. VU PANEL, AUDIO		
A-LVOUC1	S			1	9	6			A	CONN. EXT. VU PANEL, AUDIO		
	0			41	6	4			N	CONN. OUTPUT LEVEL POT, CH1		
	S			94	3	6			N	CONN. VU PANEL, AUDIO		
A-LVOUC2	0			42	6	4			N	CONN. OUTPUT LEVEL POT, CH2		
	S			94	3	14			N	CONN. VU PANEL, AUDIO		
A-LVOUC3	S			1	9	19			A	CONN. EXT. VU PANEL, AUDIO		
	0			43	6	4			N	CONN. OUTPUT LEVEL POT, CH3		
	S			94	4	6			N	CONN. VU PANEL, AUDIO		
A-LVOUC4	S			1	9	25			A	CONN. EXT. VU PANEL, AUDIO		
	0			44	6	4			N	CONN. OUTPUT LEVEL POT, CH4		
	S			94	4	14			N	CONN. VU PANEL, AUDIO		
A-MICAS1				41	2	10			N	CONN. MIC AND LINE INPUTS, CH1		
A-MICAS2				42	2	10			N	CONN. MIC AND LINE INPUTS, CH2		
A-MICAS3				43	2	10			N	CONN. MIC AND LINE INPUTS, CH3		
A-MICAS4				44	2	10			N	CONN. MIC AND LINE INPUTS, CH4		
A-MICSA1	9			41	2	7			N	CONN. MIC AND LINE INPUTS, CH1		
A-MICSA2	9			42	2	7			N	CONN. MIC AND LINE INPUTS, CH2		
A-MICSA3	9			43	2	7			N	CONN. MIC AND LINE INPUTS, CH3		

* STUDER REVOX AG * S I G N A L W I R E L I S T * 91/07/18 * 17:00 * P A G E 50 *
* 1.807.060.00 * STUDER A 807 TAPE RECORDER 4 CH * * 91/07/10 - 00 *

SIGNAL NAME	COLOR	MI	ASY	GRP	ELM	PNT	S	LV	TYPE	DESCRIPTION OF ELEMENT	REMARK	ELEMENT NR.
A-MICSA4	9			44	2	7			N	CONN. MIC AND LINE INPUTS, CH4		
A-MICSB1	6			41	2	6			N	CONN. MIC AND LINE INPUTS, CH1		
A-MICSB2	6			42	2	6			N	CONN. MIC AND LINE INPUTS, CH2		
A-MICSB3	6			43	2	6			N	CONN. MIC AND LINE INPUTS, CH3		
A-MICSB4	6			44	2	6			N	CONN. MIC AND LINE INPUTS, CH4		
A-MICSS1	S			41	2	5			N	CONN. MIC AND LINE INPUTS, CH1		
A-MICSS2	S			42	2	5			N	CONN. MIC AND LINE INPUTS, CH2		
A-MICSS3	S			43	2	5			N	CONN. MIC AND LINE INPUTS, CH3		
A-MICSS4	S			44	2	5			N	CONN. MIC AND LINE INPUTS, CH4		
A-MICSW1				41	2	9			N	CONN. MIC AND LINE INPUTS, CH1		
A-MICSW2				42	2	9			N	CONN. MIC AND LINE INPUTS, CH2		
A-MICSW3				43	2	9			N	CONN. MIC AND LINE INPUTS, CH3		
A-MICSW4				44	2	9			N	CONN. MIC AND LINE INPUTS, CH4		
A-MONIT	7			37	1	3			L	MONITOR VOLUME POTM.		
				37	1	6			L	MONITOR VOLUME POTM.		
	7			40	5	7			N	CONN. MONITOR J05		
A-MONIT1	1			1	8	12			B	CONN. EXT. VU PANEL, CTL		
	1			40	6	7			N	CONN. VU METER J06		
				40	14	20			N	CONN. AUDIO ELECTRONICS CH1		
				41	14	20			N	CONN. AUDIO CTL, J24		
	1			94	1	13			N	CONN. VU PANEL, CTL		
A-MONIT2	2			1	8	13			B	CONN. EXT. VU PANEL, CTL		
	2			40	6	8			N	CONN. VU METER J06		
				40	24	20			N	CONN. AUDIO ELECTRONICS CH2		
				42	14	20			N	CONN. AUDIO CTL, J44		
	2			94	1	14			N	CONN. VU PANEL, CTL		
A-MONIT3	3			1	8	24			B	CONN. EXT. VU PANEL, CTL		
	3			40	6	6			N	CONN. VU METER J06		
				40	34	20			N	CONN. AUDIO ELECTRONICS CH3		
				43	14	20			N	CONN. AUDIO CTL, J24		
	3			94	1	15			N	CONN. VU PANEL, CTL		
A-MONIT4	4			1	8	25			B	CONN. EXT. VU PANEL, CTL		
	4			40	6	5			N	CONN. VU METER J06		
				40	44	20			N	CONN. AUDIO ELECTRONICS CH1		
				44	14	20			N	CONN. AUDIO CTL, J24		
	4			94	1	16			N	CONN. VU PANEL, CTL		
A-PHIN1	8			37	1	5			L	MONITOR VOLUME POTM.		
	8			40	5	8			N	CONN. MONITOR J05		

* STUDER REVOX AG * S I G N A L W I R E L I S T * 91/07/18 * 17:00 * P A G E 51 *
* 1.807.060.00 * STUDER A 807 TAPE RECORDER 4 CH * * 91/07/10 - 00 *

SIGNAL NAME	COLOR	MI	ASY	GRP	ELM	PNT	S	LV	TYPE	DESCRIPTION OF ELEMENT	REMARK	ELEMENT NR.
A-PHIN2	1			37	1	2			L	MONITOR VOLUME POTM.		
	1			40	5	11			N	CONN. MONITOR J05		
A-PHOUT1	9			36	1	4			L	CONN. HEAD PHONES		
	9			40	5	9			N	CONN. MONITOR J05		
A-PHOUT2	6			36	1	3			L	CONN. HEAD PHONES		
	6			40	5	10			N	CONN. MONITOR J05		
A-PREOU1				40	11	4			N	CONN. AUDIO ELECTRONICS CH1		
				40	14	13			N	CONN. AUDIO ELECTRONICS CH1		
				40	15	6			N	CONN. INSERT, INPUT CIRCUIT J15		
				41	11	4			N	CONN. AUDIO CTL, J21		
				41	14	13			N	CONN. AUDIO CTL, J24		
A-PREOU2				40	15	15			N	CONN. INSERT, INPUT CIRCUIT J15		
				40	21	4			N	CONN. AUDIO ELECTRONICS CH2		
				40	24	13			N	CONN. AUDIO ELECTRONICS CH2		
				42	11	4			N	CONN. AUDIO CTL, J41		
				42	14	13			N	CONN. AUDIO CTL, J44		
A-PREOU3				40	31	4			N	CONN. AUDIO ELECTRONICS CH3		
				40	34	13			N	CONN. AUDIO ELECTRONICS CH3		
				40	35	6			N	CONN. INSERT, INPUT CIRCUIT J35		
				43	11	4			N	CONN. AUDIO CTL, J21		
				43	14	13			N	CONN. AUDIO CTL, J24		
A-PREOU4				40	35	15			N	CONN. INSERT, INPUT CIRCUIT J35		
				40	41	4			N	CONN. AUDIO ELECTRONICS CH4		
				40	44	13			N	CONN. AUDIO ELECTRONICS CH1		
				44	11	4			N	CONN. AUDIO CTL, J21		
				44	14	13			N	CONN. AUDIO CTL, J24		
A-RECIN1				40	12	1			N	CONN. AUDIO ELECTRONICS CH1		
				40	15	13			N	CONN. INSERT, INPUT CIRCUIT J15		
				41	12	1			N	CONN. AUDIO CTL, J22		
A-RECIN2				40	15	17			N	CONN. INSERT, INPUT CIRCUIT J15		
				40	22	1			N	CONN. AUDIO ELECTRONICS CH2		
				42	12	1			N	CONN. AUDIO CTL, J42		
A-RECIN3				40	32	1			N	CONN. AUDIO ELECTRONICS CH3		
				40	35	13			N	CONN. INSERT, INPUT CIRCUIT J35		
				43	12	1			N	CONN. AUDIO CTL, J22		
A-RECIN4				40	35	17			N	CONN. INSERT, INPUT CIRCUIT J35		
				40	42	1			N	CONN. AUDIO ELECTRONICS CH4		
				44	12	1			N	CONN. AUDIO CTL, J22		
A-SECRP1				40	13	4			N	CONN. AUDIO ELECTRONICS CH1		
				41	13	4			N	CONN. AUDIO CTL, J23		
A-SECRP2				40	23	4			N	CONN. AUDIO ELECTRONICS CH2		
				42	13	4			N	CONN. AUDIO CTL, J43		

SIGNAL NAME	COLOR	MI	ASY	GRP	ELM	PNT	S	LV	TYPE	DESCRIPTION OF ELEMENT		REMARK	ELEMENT NR.
A-SECRP3			40	33	4				N	CONN. AUDIO ELECTRONICS CH3			
			43	13	4				N	CONN. AUDIO CTL, J23			
A-SECRP4			40	43	4				N	CONN. AUDIO ELECTRONICS CH4			
			44	13	4				N	CONN. AUDIO CTL, J23			
A-SOURC1			40	15	12				N	CONN. INSERT, INPUT CIRCUIT	J15		
			40	16	2				N	CONN. INSERT, OUTPUT CIRCUIT	J16		
A-SOURC2			40	15	16				N	CONN. INSERT, INPUT CIRCUIT	J15		
			40	16	6				N	CONN. INSERT, OUTPUT CIRCUIT	J16		
A-SOURC3			40	35	12				N	CONN. INSERT, INPUT CIRCUIT	J35		
			40	36	2				N	CONN. INSERT, OUTPUT CIRCUIT	J36		
A-SOURC4			40	35	16				N	CONN. INSERT, INPUT CIRCUIT	J35		
			40	36	6				N	CONN. INSERT, OUTPUT CIRCUIT	J36		
A-TAPOU1			40	14	14				N	CONN. AUDIO ELECTRONICS CH1			
			40	16	3				N	CONN. INSERT, OUTPUT CIRCUIT	J16		
			41	14	14				N	CONN. AUDIO CTL, J24			
A-TAPOU2			40	16	7				N	CONN. INSERT, OUTPUT CIRCUIT	J16		
			40	24	14				N	CONN. AUDIO ELECTRONICS CH2			
			42	14	14				N	CONN. AUDIO CTL, J44			
A-TAPOU3			40	34	14				N	CONN. AUDIO ELECTRONICS CH3			
			40	36	3				N	CONN. INSERT, OUTPUT CIRCUIT	J36		
			43	14	14				N	CONN. AUDIO CTL, J24			
A-TAPOU4			40	36	7				N	CONN. INSERT, OUTPUT CIRCUIT	J36		
			40	44	14				N	CONN. AUDIO ELECTRONICS CH1			
			44	14	14				N	CONN. AUDIO CTL, J24			
A-VUMTR1	1		30	5	1				Y	CONN. VU-INPUT CH1			
	1		41	7	4				N	CONN. LINE OUTPUT CONNECTOR, CH1			
A-VUMTR2	1		30	6	1				Y	CONN. VU-INPUT CH2			
	1		42	7	4				N	CONN. LINE OUTPUT CONNECTOR, CH2			
A-VUMTR3	1		43	7	4				N	CONN. LINE OUTPUT CONNECTOR, CH3			
A-VUMTR4	1		44	7	4				N	CONN. LINE OUTPUT CONNECTOR, CH4			
ACA-18N	3		5	2	3				L	SECONDARY	P03		
	3		6	1	3				N	CONN. TRANSFORMER	J01		
ACA-18P	2		5	2	2				L	SECONDARY	P03		
	2		6	1	2				N	CONN. TRANSFORMER	J01		
ACA-20	4		5	2	4				L	SECONDARY	P03		
	4		6	1	1				N	CONN. TRANSFORMER	J01		
ACA-30	1		5	2	1				L	SECONDARY	P03		
	1		6	1	13				N	CONN. TRANSFORMER	J01		

SIGNAL NAME	COLOR	MI	ASY	GRP	ELM	PNT	S	LV	TYPE	DESCRIPTION OF ELEMENT		REMARK	ELEMENT NR.
ACA-40	5		5	2	5				L	SECONDARY	P03		
	5		6	1	11				N	CONN. TRANSFORMER	J01		
			6	1	12					CONN. TRANSFORMER	J01		
ACB-18N	8		5	2	8				L	SECONDARY	P03		
	8		6	1	7				N	CONN. TRANSFORMER	J01		
ACB-18P	9		5	2	9				L	SECONDARY	P03		
	9		6	1	8				N	CONN. TRANSFORMER	J01		
ACB-20	7		5	2	7				L	SECONDARY	P03		
	7		6	1	9				N	CONN. TRANSFORMER	J01		
ACB-30	0		5	2	10				L	SECONDARY	P03		
	0		6	1	10				N	CONN. TRANSFORMER	J01		
ACB-40	6		5	2	6				L	SECONDARY	P03		
	6		6	1	4				N	CONN. TRANSFORMER	J01		
			6	1	5					CONN. TRANSFORMER	J01		
AN-TTENS	9		11	2	4				N	CONN. TAPE TENS. SENSOR	J02		
	9		13	1	5				N	CONN. SP. MOTOR CTL, J02			
ARC-CLK	3		1	10	3				B	AUDIO REMOTE CONTROL CONN.			
	3		51	1	3				N	AUDIO REMOTE CONTROL IF.			
ARC-DATA	2		1	10	2				B	AUDIO REMOTE CONTROL CONN.			
	2		51	1	2				N	AUDIO REMOTE CONTROL IF.			
ARC-DPEN	6		1	10	6				B	AUDIO REMOTE CONTROL CONN.			
	6		51	1	1				N	AUDIO REMOTE CONTROL IF.			
ARC-D0	9		1	10	10				B	AUDIO REMOTE CONTROL CONN.			
	9		51	1	12				N	AUDIO REMOTE CONTROL IF.			
ARC-D4	4		1	10	14				B	AUDIO REMOTE CONTROL CONN.			
	4		51	1	10				N	AUDIO REMOTE CONTROL IF.			
ARC-D5	3		1	10	13				B	AUDIO REMOTE CONTROL CONN.			
	3		51	1	13				N	AUDIO REMOTE CONTROL IF.			
ARC-D6	2		1	10	12				B	AUDIO REMOTE CONTROL CONN.			
	2		51	1	14				N	AUDIO REMOTE CONTROL IF.			
ARC-D7	1		1	10	11				B	AUDIO REMOTE CONTROL CONN.			
	1		51	1	9				N	AUDIO REMOTE CONTROL IF.			
ARC-LDEN	5		1	10	5				B	AUDIO REMOTE CONTROL CONN.			
	5		51	1	5				N	AUDIO REMOTE CONTROL IF.			
ARC-MXEN	4		1	10	4				B	AUDIO REMOTE CONTROL CONN.			
	4		51	1	4				N	AUDIO REMOTE CONTROL IF.			
AS-CLK	6		10	10	6				N	CONN. AUDIO CTL.	J10		
	6		40	2	3				N	CONN. TAPE DECK ELECTRONICS	J02		

* STUDER REVOX AG * S I G N A L W I R E L I S T * 91/07/18 * 17:00 * P A G E 54 *
* 1.807.060.00 * STUDER A 807 TAPE RECORDER 4 CH * * 91/07/10 - 00 *

SIGNAL NAME	COLOR	MI	ASY	GRP	ELM	PNT	S	LV	TYPE	DESCRIPTION OF ELEMENT		REMARK	ELEMENT NR.
AS-DATA	7			10	10	7			N	CONN. AUDIO CTL.	J10		
	7			40	2	2			N	CONN. TAPE DECK ELECTRONICS	J02		
AS-FAD	1			10	10	1			N	CONN. AUDIO CTL.	J10		
	1			40	2	14			N	CONN. TAPE DECK ELECTRONICS	J02		
AS-HFCLK	8			10	10	8			N	CONN. AUDIO CTL.	J10		
	8			40	2	19			N	CONN. TAPE DECK ELECTRONICS	J02		
AS-RESET	9			10	10	9			N	CONN. AUDIO CTL.	J10		
	9			40	2	16			N	CONN. TAPE DECK ELECTRONICS	J02		
AS-STR	5			10	10	5			N	CONN. AUDIO CTL.	J10		
	5			40	2	5			N	CONN. TAPE DECK ELECTRONICS	J02		
AS-STRAB	4			10	10	4			N	CONN. AUDIO CTL.	J10		
	4			40	2	1			N	CONN. TAPE DECK ELECTRONICS	J02		
				40	12	14			N	CONN. AUDIO ELECTRONICS CH1			
				40	14	6			N	CONN. AUDIO ELECTRONICS CH1			
				40	22	14			N	CONN. AUDIO ELECTRONICS CH2			
				40	24	6			N	CONN. AUDIO ELECTRONICS CH2			
				40	32	14			N	CONN. AUDIO ELECTRONICS CH3			
				40	34	6			N	CONN. AUDIO ELECTRONICS CH3			
				40	42	14			N	CONN. AUDIO ELECTRONICS CH4			
				40	44	6			N	CONN. AUDIO ELECTRONICS CH1			
				41	12	14			N	CONN. AUDIO CTL, J22			
				41	14	6			N	CONN. AUDIO CTL, J24			
				42	12	14			N	CONN. AUDIO CTL, J42			
				42	14	6			N	CONN. AUDIO CTL, J44			
				43	12	14			N	CONN. AUDIO CTL, J22			
				43	14	6			N	CONN. AUDIO CTL, J24			
				44	12	14			N	CONN. AUDIO CTL, J22			
				44	14	6			N	CONN. AUDIO CTL, J24			
AS-STREC	4			10	10	16			N	CONN. AUDIO CTL.	J10		
	4			40	2	6			N	CONN. TAPE DECK ELECTRONICS	J02		
AS-WREN	3			10	10	3			N	CONN. AUDIO CTL.	J10		
	3			40	2	4			N	CONN. TAPE DECK ELECTRONICS	J02		
B-DBY-01	1			1	5	1			B	NRS CONTROL CONNECTOR			
	1			47	5	10			N	CONN. NRS CONTROL J2			
B-DBY-02	2			1	5	2			B	NRS CONTROL CONNECTOR			
	2			47	5	7			N	CONN. NRS CONTROL J2			
B-DBY-03	3			1	5	3			B	NRS CONTROL CONNECTOR			
	3			47	5	5			N	CONN. NRS CONTROL J2			
B-DBY-04	4			1	5	4			B	NRS CONTROL CONNECTOR			
	4			47	5	3			N	CONN. NRS CONTROL J2			
B-FAST				30	1	1			N	CONN. SPEED INDICATORS			
				31	1	1			N	CONN. COMMAND PANEL J01			

* STUDER REVOX AG * S I G N A L W I R E L I S T * 91/07/18 * 17:00 * P A G E 55 *
* 1.807.060.00 * STUDER A 807 TAPE RECORDER 4 CH * * 91/07/10 - 00 *

SIGNAL NAME	COLOR	MI	ASY	GRP	ELM	PNT	S	LV	TYPE	DESCRIPTION OF ELEMENT		REMARK	ELEMENT NR.
B-MID				30	1	2			N	CONN. SPEED INDICATORS			
				31	1	2			N	CONN. COMMAND PANEL J01			
B-SLOW				30	1	3			N	CONN. SPEED INDICATORS			
				31	1	3			N	CONN. COMMAND PANEL J01			
B-TLC-01	5			1	5	5			B	NRS CONTROL CONNECTOR			
	5			47	5	11			N	CONN. NRS CONTROL J2			
B-TLC-02	6			1	5	6			B	NRS CONTROL CONNECTOR			
	6			47	5	8			N	CONN. NRS CONTROL J2			
B-TLC-03	7			1	5	7			B	NRS CONTROL CONNECTOR			
	7			47	5	6			N	CONN. NRS CONTROL J2			
B-TLC-04	8			1	5	8			B	NRS CONTROL CONNECTOR			
	8			47	5	4			N	CONN. NRS CONTROL J2			
BR-FADRY	7			1	6	8			B	PARALLEL REMOTE CONNECTOR			
	7			10	12	7			N	CONN. PARALLEL REMOTE B	J12		
	7			51	12	7			N	CONN. PARALLEL REMOTE B	J12		
BR-FORW	2			1	6	3			B	PARALLEL REMOTE CONNECTOR			
	2			1	7	3			B	SYNCHRONIZER CONNECTOR			
	2			10	12	2			N	CONN. PARALLEL REMOTE B	J12		
	2			10	14	2			N	CONN. SYNCHRONIZER B	J14		
	2			51	12	2			N	CONN. PARALLEL REMOTE B	J12		
BR-LOCST	8			1	6	7			B	PARALLEL REMOTE CONNECTOR			
	8			10	12	8			N	CONN. PARALLEL REMOTE B	J12		
	8			51	12	8			N	CONN. PARALLEL REMOTE B	J12		
BR-PLAY	1			1	6	15			B	PARALLEL REMOTE CONNECTOR			
	1			1	7	15			B	SYNCHRONIZER CONNECTOR			
	1			10	12	1			N	CONN. PARALLEL REMOTE B	J12		
	1			10	14	1			N	CONN. SYNCHRONIZER B	J14		
	1			51	12	1			N	CONN. PARALLEL REMOTE B	J12		
BR-REC	5			1	6	9			B	PARALLEL REMOTE CONNECTOR			
	5			1	7	9			B	SYNCHRONIZER CONNECTOR			
	5			10	12	5			N	CONN. PARALLEL REMOTE B	J12		
	5			10	14	5			N	CONN. SYNCHRONIZER B	J14		
	5			51	12	5			N	CONN. PARALLEL REMOTE B	J12		
BR-REW	3			1	6	2			B	PARALLEL REMOTE CONNECTOR			
	3			1	7	2			B	SYNCHRONIZER CONNECTOR			
	3			10	12	3			N	CONN. PARALLEL REMOTE B	J12		
	3			10	14	3			N	CONN. SYNCHRONIZER B	J14		
	3			51	12	3			N	CONN. PARALLEL REMOTE B	J12		
BR-STOP	4			1	6	16			B	PARALLEL REMOTE CONNECTOR			
	4			1	7	16			B	SYNCHRONIZER CONNECTOR			
	4			10	12	4			N	CONN. PARALLEL REMOTE B	J12		
	4			10	14	4			N	CONN. SYNCHRONIZER B	J14		
	4			51	12	4			N	CONN. PARALLEL REMOTE B	J12		

* STUDER REVOX AG * S I G N A L W I R E L I S T * 91/07/18 * 17:00 * P A G E 56 *
* 1.807.060.00 * STUDER A 807 TAPE RECORDER 4 CH * * 91/07/10 - 00 *

SIGNAL NAME	COLOR	MI	ASY	GRP	ELM	PNT	S	LV	TYPE	DESCRIPTION OF ELEMENT		REMARK	ELEMENT NR.
BR-VRSPD	6			1	6	4			B	PARALLEL REMOTE CONNECTOR			
	6			1	7	4			B	SYNCHRONIZER CONNECTOR			
	6			10	12	6			N	CONN. PARALLEL REMOTE B	J12		
	6			10	14	6			N	CONN. SYNCHRONIZER B	J14		
	6			51	12	6			N	CONN. PARALLEL REMOTE B	J12		
C-BASS				40	13	3			N	CONN. AUDIO ELECTRONICS CH1			
				40	23	3			N	CONN. AUDIO ELECTRONICS CH2			
				40	33	3			N	CONN. AUDIO ELECTRONICS CH3			
				40	43	3			N	CONN. AUDIO ELECTRONICS CH4			
				41	13	3			N	CONN. AUDIO CTL, J23			
				42	13	3			N	CONN. AUDIO CTL, J43			
				43	13	3			N	CONN. AUDIO CTL, J23			
				44	13	3			N	CONN. AUDIO CTL, J23			
C-BIAS1				40	12	3			N	CONN. AUDIO ELECTRONICS CH1			
				41	12	3			N	CONN. AUDIO CTL, J22			
C-BIAS2				40	22	3			N	CONN. AUDIO ELECTRONICS CH2			
				42	12	3			N	CONN. AUDIO CTL, J42			
C-BIAS3				40	32	3			N	CONN. AUDIO ELECTRONICS CH3			
				43	12	3			N	CONN. AUDIO CTL, J22			
C-BIAS4				40	42	3			N	CONN. AUDIO ELECTRONICS CH4			
				44	12	3			N	CONN. AUDIO CTL, J22			
C-CALIN1				40	11	5			N	CONN. AUDIO ELECTRONICS CH1			
				41	11	5			N	CONN. AUDIO CTL, J21			
C-CALIN2				40	21	5			N	CONN. AUDIO ELECTRONICS CH2			
				42	11	5			N	CONN. AUDIO CTL, J41			
C-CALIN3				40	31	5			N	CONN. AUDIO ELECTRONICS CH3			
				43	11	5			N	CONN. AUDIO CTL, J21			
C-CALIN4				40	41	5			N	CONN. AUDIO ELECTRONICS CH4			
				44	11	5			N	CONN. AUDIO CTL, J21			
C-CALOU1				40	14	16			N	CONN. AUDIO ELECTRONICS CH1			
				41	14	16			N	CONN. AUDIO CTL, J24			
C-CALOU2				40	24	16			N	CONN. AUDIO ELECTRONICS CH2			
				42	14	16			N	CONN. AUDIO CTL, J44			
C-CALOU3				40	34	16			N	CONN. AUDIO ELECTRONICS CH3			
				43	14	16			N	CONN. AUDIO CTL, J24			
C-CALOU4				40	44	16			N	CONN. AUDIO ELECTRONICS CH1			
				44	14	16			N	CONN. AUDIO CTL, J24			
C-CUEAT				40	14	18			N	CONN. AUDIO ELECTRONICS CH1			
				40	24	18			N	CONN. AUDIO ELECTRONICS CH2			
				40	34	18			N	CONN. AUDIO ELECTRONICS CH3			
				40	44	18			N	CONN. AUDIO ELECTRONICS CH1			

* STUDER REVOX AG * S I G N A L W I R E L I S T * 91/07/18 * 17:00 * P A G E 57 *
* 1.807.060.00 * STUDER A 807 TAPE RECORDER 4 CH * * 91/07/10 - 00 *

SIGNAL NAME	COLOR	MI	ASY	GRP	ELM	PNT	S	LV	TYPE	DESCRIPTION OF ELEMENT		REMARK	ELEMENT NR.
<<-- CONT.OF				41	14	18			N	CONN. AUDIO CTL, J24			
C-CUEAT				42	14	18			N	CONN. AUDIO CTL, J44			
				43	14	18			N	CONN. AUDIO CTL, J24			
				44	14	18			N	CONN. AUDIO CTL, J24			
C-EQA				40	12	4			N	CONN. AUDIO ELECTRONICS CH1			
				40	13	6			N	CONN. AUDIO ELECTRONICS CH1			
				40	22	4			N	CONN. AUDIO ELECTRONICS CH2			
				40	23	6			N	CONN. AUDIO ELECTRONICS CH2			
				40	32	4			N	CONN. AUDIO ELECTRONICS CH3			
				40	33	6			N	CONN. AUDIO ELECTRONICS CH3			
				40	42	4			N	CONN. AUDIO ELECTRONICS CH4			
				40	43	6			N	CONN. AUDIO ELECTRONICS CH4			
				41	12	4			N	CONN. AUDIO CTL, J22			
				41	13	6			N	CONN. AUDIO CTL, J23			
				42	12	4			N	CONN. AUDIO CTL, J42			
				42	13	6			N	CONN. AUDIO CTL, J43			
				43	12	4			N	CONN. AUDIO CTL, J22			
				43	13	6			N	CONN. AUDIO CTL, J23			
				44	12	4			N	CONN. AUDIO CTL, J22			
				44	13	6			N	CONN. AUDIO CTL, J23			
C-EQB				40	12	5			N	CONN. AUDIO ELECTRONICS CH1			
				40	13	5			N	CONN. AUDIO ELECTRONICS CH1			
				40	22	5			N	CONN. AUDIO ELECTRONICS CH2			
				40	23	5			N	CONN. AUDIO ELECTRONICS CH2			
				40	32	5			N	CONN. AUDIO ELECTRONICS CH3			
				40	33	5			N	CONN. AUDIO ELECTRONICS CH3			
				40	42	5			N	CONN. AUDIO ELECTRONICS CH4			
				40	43	5			N	CONN. AUDIO ELECTRONICS CH4			
				41	12	5			N	CONN. AUDIO CTL, J22			
				41	13	5			N	CONN. AUDIO CTL, J23			
				42	12	5			N	CONN. AUDIO CTL, J42			
				42	13	5			N	CONN. AUDIO CTL, J43			
				43	12	5			N	CONN. AUDIO CTL, J22			
				43	13	5			N	CONN. AUDIO CTL, J23			
				44	12	5			N	CONN. AUDIO CTL, J22			
				44	13	5			N	CONN. AUDIO CTL, J23			
C-EQF	8			40	3	8			N	CONN. AUDIO CONTROL	J03		
				40	15	7			N	CONN. INSERT, INPUT CIRCUIT	J15		
				40	35	7			N	CONN. INSERT, INPUT CIRCUIT	J35		
				47	1	8			N	CONN. TO AUDIO CONTROL J03			
				47	3	8			N	CONN. NRS CONTROL J3			
	8			70	2	8			N	CONN. AUDIO CONTROL	J02		
C-EQM	6			40	3	6			N	CONN. AUDIO CONTROL	J03		
				40	15	8			N	CONN. INSERT, INPUT CIRCUIT	J15		
				40	35	8			N	CONN. INSERT, INPUT CIRCUIT	J35		
				47	1	6			N	CONN. TO AUDIO CONTROL J03			
				47	3	6			N	CONN. NRS CONTROL J3			
	6			70	2	6			N	CONN. AUDIO CONTROL	J02		
C-EQN				40	15	11			N	CONN. INSERT, INPUT CIRCUIT	J15		
				40	35	11			N	CONN. INSERT, INPUT CIRCUIT	J35		

* STUDER REVOX AG * S I G N A L W I R E L I S T * 91/07/18 * 17:00 * P A G E 58 *
* 1.807.060.00 * STUDER A 807 TAPE RECORDER 4 CH * * 91/07/10 - 00 *

SIGNAL NAME	COLOR	MI	ASY	GRP	ELM	PNT	S	LV	TYPE	DESCRIPTION OF ELEMENT		REMARK	ELEMENT NR.
C-EQS	7			40	3	7			N	CONN. AUDIO CONTROL	J03		
				40	15	9			N	CONN. INSERT, INPUT CIRCUIT	J15		
				40	35	9			N	CONN. INSERT, INPUT CIRCUIT	J35		
				47	1	7			N	CONN. TO AUDIO CONTROL J03			
				47	3	7			N	CONN. NRS CONTROL J3			
	7			70	2	7			N	CONN. AUDIO CONTROL	J02		
C-ERASE1				40	12	2			N	CONN. AUDIO ELECTRONICS CH1			
				41	12	2			N	CONN. AUDIO CTL, J22			
C-ERASE2				40	22	2			N	CONN. AUDIO ELECTRONICS CH2			
				42	12	2			N	CONN. AUDIO CTL, J42			
C-ERASE3				40	32	2			N	CONN. AUDIO ELECTRONICS CH3			
				43	12	2			N	CONN. AUDIO CTL, J22			
C-ERASE4				40	42	2			N	CONN. AUDIO ELECTRONICS CH4			
				44	12	2			N	CONN. AUDIO CTL, J22			
C-I/O	3			37	1	8			L	MONITOR VOLUME POTM.			
	3			40	5	3			N	CONN. MONITOR	J05		
C-INIT	4			40	3	4			N	CONN. AUDIO CONTROL	J03		
				47	1	4			N	CONN. TO AUDIO CONTROL J03			
				47	3	4			N	CONN. NRS CONTROL J3			
	4			70	2	4			N	CONN. AUDIO CONTROL	J02		
C-INPUT1	7			40	4	17			N	CONN. AUDIO CONTROL	J04		
				40	14	15			N	CONN. AUDIO ELECTRONICS CH1			
				41	14	15			N	CONN. AUDIO CTL, J24			
				47	2	17			N	CONN. TO AUDIO CONTROL J04			
				47	4	17			N	CONN. NRS CONTROL J4			
	7			70	3	17			N	CONN. AUDIO CONTROL	J03		
C-INPUT2	8			40	4	18			N	CONN. AUDIO CONTROL	J04		
				40	24	15			N	CONN. AUDIO ELECTRONICS CH2			
				42	14	15			N	CONN. AUDIO CTL, J44			
				47	2	18			N	CONN. TO AUDIO CONTROL J04			
				47	4	18			N	CONN. NRS CONTROL J4			
	8			70	3	18			N	CONN. AUDIO CONTROL	J03		
C-INPUT3	9			40	4	19			N	CONN. AUDIO CONTROL	J04		
				40	34	15			N	CONN. AUDIO ELECTRONICS CH3			
				43	14	15			N	CONN. AUDIO CTL, J24			
				47	2	19			N	CONN. TO AUDIO CONTROL J04			
				47	4	19			N	CONN. NRS CONTROL J4			
	9			70	3	19			N	CONN. AUDIO CONTROL	J03		
C-INPUT4	0			40	4	20			N	CONN. AUDIO CONTROL	J04		
				40	44	15			N	CONN. AUDIO ELECTRONICS CH1			
				44	14	15			N	CONN. AUDIO CTL, J24			
				47	2	20			N	CONN. TO AUDIO CONTROL J04			
				47	4	20			N	CONN. NRS CONTROL J4			
	0			70	3	20			N	CONN. AUDIO CONTROL	J03		

* STUDER REVOX AG * S I G N A L W I R E L I S T * 91/07/18 * 17:00 * P A G E 59 *
* 1.807.060.00 * STUDER A 807 TAPE RECORDER 4 CH * * 91/07/10 - 00 *

SIGNAL NAME	COLOR	MI	ASY	GRP	ELM	PNT	S	LV	TYPE	DESCRIPTION OF ELEMENT		REMARK	ELEMENT NR.
C-INSERT				40	15	10			N	CONN. INSERT, INPUT CIRCUIT	J15		
				40	35	10			N	CONN. INSERT, INPUT CIRCUIT	J35		
C-MICAT1				40	11	3			N	CONN. AUDIO ELECTRONICS CH1			
				41	11	3			N	CONN. AUDIO CTL, J21			
C-MICAT2				40	21	3			N	CONN. AUDIO ELECTRONICS CH2			
				42	11	3			N	CONN. AUDIO CTL, J41			
C-MICAT3				40	31	3			N	CONN. AUDIO ELECTRONICS CH3			
				43	11	3			N	CONN. AUDIO CTL, J21			
C-MICAT4				40	41	3			N	CONN. AUDIO ELECTRONICS CH4			
				44	11	3			N	CONN. AUDIO CTL, J21			
C-MICON1				40	11	7			N	CONN. AUDIO ELECTRONICS CH1			
				41	11	7			N	CONN. AUDIO CTL, J21			
C-MICON2				40	21	7			N	CONN. AUDIO ELECTRONICS CH2			
				42	11	7			N	CONN. AUDIO CTL, J41			
C-MICON3				40	31	7			N	CONN. AUDIO ELECTRONICS CH3			
				43	11	7			N	CONN. AUDIO CTL, J21			
C-MICON4				40	41	7			N	CONN. AUDIO ELECTRONICS CH4			
				44	11	7			N	CONN. AUDIO CTL, J21			
C-MONIT1	4			36	2	2			N	CONN. MONITOR SWITCH			
	4			40	5	4			N	CONN. MONITOR	J05		
C-MONIT2	2			36	2	4			N	CONN. MONITOR SWITCH			
	2			40	5	2			N	CONN. MONITOR	J05		
C-MONIT3	1			36	2	5			N	CONN. MONITOR SWITCH			
	1			40	5	1			N	CONN. MONITOR	J05		
C-MONIT4	5			36	2	6			N	CONN. MONITOR SWITCH			
	5			40	5	5			N	CONN. MONITOR	J05		
C-MOTFLT				11	7	7			N	CONN. SP. MOTOR FILTER, LEFT	J07		
				12	1	7			N	CONN. SP. MOTOR CTL,	P01		
C-NAB				40	11	2			N	CONN. AUDIO ELECTRONICS CH1			
				40	14	11			N	CONN. AUDIO ELECTRONICS CH1			
				40	21	2			N	CONN. AUDIO ELECTRONICS CH2			
				40	24	11			N	CONN. AUDIO ELECTRONICS CH2			
				40	31	2			N	CONN. AUDIO ELECTRONICS CH3			
				40	34	11			N	CONN. AUDIO ELECTRONICS CH3			
				40	41	2			N	CONN. AUDIO ELECTRONICS CH4			
				40	44	11			N	CONN. AUDIO ELECTRONICS CH1			
				41	11	2			N	CONN. AUDIO CTL, J21			
				41	14	11			N	CONN. AUDIO CTL, J24			
				42	11	2			N	CONN. AUDIO CTL, J41			
				42	14	11			N	CONN. AUDIO CTL, J44			
				43	11	2			N	CONN. AUDIO CTL, J21			

* STUDER REVOX AG * S I G N A L W I R E L I S T * 91/07/18 * 17:00 * P A G E 60 *
* 1.807.060.00 * STUDER A 807 TAPE RECORDER 4 CH * * 91/07/10 - 00 *

SIGNAL NAME	COLOR	MI	ASY	GRP	ELM	PNT	S	LV	TYPE	DESCRIPTION OF ELEMENT		REMARK	ELEMENT NR.
<<-- CONT.OF				43	14	11			N	CONN. AUDIO CTL, J24			
C-NAB				44	11	2			N	CONN. AUDIO CTL, J21			
				44	14	11			N	CONN. AUDIO CTL, J24			
C-OUTSW				40	14	19			N	CONN. AUDIO ELECTRONICS CH1			
				40	24	19			N	CONN. AUDIO ELECTRONICS CH2			
				40	34	19			N	CONN. AUDIO ELECTRONICS CH3			
				40	44	19			N	CONN. AUDIO ELECTRONICS CH1			
				41	14	19			N	CONN. AUDIO CTL, J24			
				42	14	19			N	CONN. AUDIO CTL, J44			
				43	14	19			N	CONN. AUDIO CTL, J24			
				44	14	19			N	CONN. AUDIO CTL, J24			
C-REC	5			40	3	5			N	CONN. AUDIO CONTROL	J03		
				47	1	5			N	CONN. TO AUDIO CONTROL J03			
				47	3	5			N	CONN. NRS CONTROL J3			
	5			70	2	5			N	CONN. AUDIO CONTROL	J02		
C-REC1	1			40	4	1			N	CONN. AUDIO CONTROL	J04		
				40	12	19			N	CONN. AUDIO ELECTRONICS CH1			
				41	12	19			N	CONN. AUDIO CTL, J22			
				44	12	19			N	CONN. AUDIO CTL, J22			
				47	2	1			N	CONN. TO AUDIO CONTROL J04			
				47	4	1			N	CONN. NRS CONTROL J4			
	1			70	3	1			N	CONN. AUDIO CONTROL	J03		
C-REC2	2			40	4	2			N	CONN. AUDIO CONTROL	J04		
				40	22	19			N	CONN. AUDIO ELECTRONICS CH2			
				42	12	19			N	CONN. AUDIO CTL, J42			
				47	2	2			N	CONN. TO AUDIO CONTROL J04			
				47	4	2			N	CONN. NRS CONTROL J4			
	2			70	3	2			N	CONN. AUDIO CONTROL	J03		
C-REC3	3			40	4	3			N	CONN. AUDIO CONTROL	J04		
				40	32	19			N	CONN. AUDIO ELECTRONICS CH3			
				43	12	19			N	CONN. AUDIO CTL, J22			
				47	2	3			N	CONN. TO AUDIO CONTROL J04			
				47	4	3			N	CONN. NRS CONTROL J4			
	3			70	3	3			N	CONN. AUDIO CONTROL	J03		
C-REC4	4			40	4	4			N	CONN. AUDIO CONTROL	J04		
				40	42	19			N	CONN. AUDIO ELECTRONICS CH4			
				47	2	4			N	CONN. TO AUDIO CONTROL J04			
				47	4	4			N	CONN. NRS CONTROL J4			
	4			70	3	4			N	CONN. AUDIO CONTROL	J03		
C-REPRO1				40	13	8			N	CONN. AUDIO ELECTRONICS CH1			
				41	13	8			N	CONN. AUDIO CTL, J23			
C-REPRO2				40	23	8			N	CONN. AUDIO ELECTRONICS CH2			
				42	13	8			N	CONN. AUDIO CTL, J43			
C-REPRO3				40	33	8			N	CONN. AUDIO ELECTRONICS CH3			
				43	13	8			N	CONN. AUDIO CTL, J23			

* STUDER REVOX AG * S I G N A L W I R E L I S T * 91/07/18 * 17:00 * P A G E 61 *
* 1.807.060.00 * STUDER A 807 TAPE RECORDER 4 CH * * 91/07/10 - 00 *

SIGNAL NAME	COLOR	MI	ASY	GRP	ELM	PNT	S	LV	TYPE	DESCRIPTION OF ELEMENT		REMARK	ELEMENT NR.
C-REPRO4				40	43	8			N	CONN. AUDIO ELECTRONICS CH4			
				44	13	8			N	CONN. AUDIO CTL, J23			
C-REPR1	6			40	4	6			N	CONN. AUDIO CONTROL	J04		
				47	2	6			N	CONN. TO AUDIO CONTROL J04			
				47	4	6			N	CONN. NRS CONTROL J4			
	6			70	3	6			N	CONN. AUDIO CONTROL	J03		
C-REPR2	0			40	4	10			N	CONN. AUDIO CONTROL	J04		
				47	2	10			N	CONN. TO AUDIO CONTROL J04			
				47	4	10			N	CONN. NRS CONTROL J4			
	0			70	3	10			N	CONN. AUDIO CONTROL	J03		
C-REPR3	8			40	4	8			N	CONN. AUDIO CONTROL	J04		
				47	2	8			N	CONN. TO AUDIO CONTROL J04			
				47	4	8			N	CONN. NRS CONTROL J4			
	8			70	3	8			N	CONN. AUDIO CONTROL	J03		
C-REPR4	2			40	4	12			N	CONN. AUDIO CONTROL	J04		
				47	2	12			N	CONN. TO AUDIO CONTROL J04			
				47	4	12			N	CONN. NRS CONTROL J4			
	2			70	3	12			N	CONN. AUDIO CONTROL	J03		
C-SECRP1				40	13	9			N	CONN. AUDIO ELECTRONICS CH1			
				41	13	9			N	CONN. AUDIO CTL, J23			
C-SECRP2				40	23	9			N	CONN. AUDIO ELECTRONICS CH2			
				42	13	9			N	CONN. AUDIO CTL, J43			
C-SECRP3				40	33	9			N	CONN. AUDIO ELECTRONICS CH3			
				43	13	9			N	CONN. AUDIO CTL, J23			
C-SECRP4				40	43	9			N	CONN. AUDIO ELECTRONICS CH4			
				44	13	9			N	CONN. AUDIO CTL, J23			
C-SYNC1	5			40	4	5			N	CONN. AUDIO CONTROL	J04		
				40	13	7			N	CONN. AUDIO ELECTRONICS CH1			
				41	13	7			N	CONN. AUDIO CTL, J23			
				47	2	5			N	CONN. TO AUDIO CONTROL J04			
				47	4	5			N	CONN. NRS CONTROL J4			
	5			70	3	5			N	CONN. AUDIO CONTROL	J03		
C-SYNC2	9			40	4	9			N	CONN. AUDIO CONTROL	J04		
				40	23	7			N	CONN. AUDIO ELECTRONICS CH2			
				42	13	7			N	CONN. AUDIO CTL, J43			
				47	2	9			N	CONN. TO AUDIO CONTROL J04			
				47	4	9			N	CONN. NRS CONTROL J4			
	9			70	3	9			N	CONN. AUDIO CONTROL	J03		
C-SYNC3	7			40	4	7			N	CONN. AUDIO CONTROL	J04		
				40	33	7			N	CONN. AUDIO ELECTRONICS CH3			
				43	13	7			N	CONN. AUDIO CTL, J23			
				47	2	7			N	CONN. TO AUDIO CONTROL J04			
				47	4	7			N	CONN. NRS CONTROL J4			
	7			70	3	7			N	CONN. AUDIO CONTROL	J03		

```
*    STUDER REVOX AG   *    S I G N A L     W I R E     L I S T              * 91/07/18 * 17:00 *  P A G E  62  *
*            1.807.060.00  * STUDER  A 807 TAPE RECORDER 4 CH *               * 91/07/10 - 00                    *
```

SIGNAL NAME	COLOR	MI	ASY	GRP	ELM	PNT	S	LV	TYPE	DESCRIPTION OF ELEMENT		REMARK	ELEMENT NR.
C-SYNC4	1		40	4	11				N	CONN. AUDIO CONTROL	J04		
			40	43	7				N	CONN. AUDIO ELECTRONICS CH4			
			44	13	7				N	CONN. AUDIO CTL, J23			
			47	2	11				N	CONN. TO AUDIO CONTROL J04			
			47	4	11				N	CONN. NRS CONTROL J4			
	1		70	3	11				N	CONN. AUDIO CONTROL	J03		
C-UNCIN1			40	11	6				N	CONN. AUDIO ELECTRONICS CH1			
			41	11	6				N	CONN. AUDIO CTL, J21			
C-UNCIN2			40	21	6				N	CONN. AUDIO ELECTRONICS CH2			
			42	11	6				N	CONN. AUDIO CTL, J41			
C-UNCIN3			40	31	6				N	CONN. AUDIO ELECTRONICS CH3			
			43	11	6				N	CONN. AUDIO CTL, J21			
C-UNCIN4			40	41	6				N	CONN. AUDIO ELECTRONICS CH4			
			44	11	6				N	CONN. AUDIO CTL, J21			
C-UNCOU1			40	14	17				N	CONN. AUDIO ELECTRONICS CH1			
			41	14	17				N	CONN. AUDIO CTL, J24			
C-UNCOU2			40	24	17				N	CONN. AUDIO ELECTRONICS CH2			
			42	14	17				N	CONN. AUDIO CTL, J44			
C-UNCOU3			40	34	17				N	CONN. AUDIO ELECTRONICS CH3			
			43	14	17				N	CONN. AUDIO CTL, J24			
C-UNCOU4			40	44	17				N	CONN. AUDIO ELECTRONICS CH1			
			44	14	17				N	CONN. AUDIO CTL, J24			
CA-ADR-R			70	10	27					CONN. TIME CODE WRITE/READ UNIT	J10		
			70	21	27					TIME CODE WRITE/READ UNIT			
CA-ADR-S			70	10	28					CONN. TIME CODE WRITE/READ UNIT	J10		
			70	21	28					TIME CODE WRITE/READ UNIT			
CA-ADR-T			70	10	29					CONN. TIME CODE WRITE/READ UNIT	J10		
			70	21	29					TIME CODE WRITE/READ UNIT			
CA-ADR-U			70	10	30					CONN. TIME CODE WRITE/READ UNIT	J10		
			70	21	30					TIME CODE WRITE/READ UNIT			
CA-CHSTC			70	10	39					CONN. TIME CODE WRITE/READ UNIT	J10		
			70	21	39					TIME CODE WRITE/READ UNIT			
CA-DATA0			70	10	31					CONN. TIME CODE WRITE/READ UNIT	J10		
			70	21	31					TIME CODE WRITE/READ UNIT			
CA-DATA1			70	10	32					CONN. TIME CODE WRITE/READ UNIT	J10		
			70	21	32					TIME CODE WRITE/READ UNIT			
CA-DATA2			70	10	33					CONN. TIME CODE WRITE/READ UNIT	J10		
			70	21	33					TIME CODE WRITE/READ UNIT			

```
*    STUDER REVOX AG   *    S I G N A L     W I R E     L I S T              * 91/07/18 * 17:00 *  P A G E  63  *
*            1.807.060.00  * STUDER  A 807 TAPE RECORDER 4 CH *               * 91/07/10 - 00                    *
```

SIGNAL NAME	COLOR	MI	ASY	GRP	ELM	PNT	S	LV	TYPE	DESCRIPTION OF ELEMENT		REMARK	ELEMENT NR.
CA-DATA3			70	10	34					CONN. TIME CODE WRITE/READ UNIT	J10		
			70	21	34					TIME CODE WRITE/READ UNIT			
CA-DATA4			70	10	35					CONN. TIME CODE WRITE/READ UNIT	J10		
			70	21	35					TIME CODE WRITE/READ UNIT			
CA-DATA5			70	10	36					CONN. TIME CODE WRITE/READ UNIT	J10		
			70	21	36					TIME CODE WRITE/READ UNIT			
CA-DATA6			70	10	37					CONN. TIME CODE WRITE/READ UNIT	J10		
			70	21	37					TIME CODE WRITE/READ UNIT			
CA-DATA7			70	10	38					CONN. TIME CODE WRITE/READ UNIT	J10		
			70	21	38					TIME CODE WRITE/READ UNIT			
CA-SAFE			70	10	26					CONN. TIME CODE WRITE/READ UNIT	J10		
			70	21	26					TIME CODE WRITE/READ UNIT			
CAP-GRD			20	3	12					CONN. CAPSTAN TACHO	J03		
			21	2	12					CONN. CAPSTAN CTL, J03			
CHC2-N	8		6	2	1				N	CONN. TO CHARGE CAPACITORS	J02		
	8		6	3	4				N	CONN. FROM CHARGE CAPACITORS	J03		
	8		7	2	2				L	CHARGE CAPACITOR CHC2			
CHC2-P	7		6	2	4				N	CONN. TO CHARGE CAPACITORS	J02		
	7		6	3	7				L	CONN. FROM CHARGE CAPACITORS	J03		
	7		7	2	1				L	CHARGE CAPACITOR CHC2			
CHC3-N	3		6	2	2				N	CONN. TO CHARGE CAPACITORS	J02		
	3		6	3	2				N	CONN. FROM CHARGE CAPACITORS	J03		
	3		7	3	2				L	CHARGE CAPACITOR CHC3			
	3		40	1	3				N	CONN. POWER SUPPLY	J01		
			40	1	5				N	CONN. POWER SUPPLY	J01		
CHC3-P	2		6	2	5				N	CONN. TO CHARGE CAPACITORS	J02		
	2		6	3	6				N	CONN. FROM CHARGE CAPACITORS	J03		
	2		7	3	1				L	CHARGE CAPACITOR CHC3			
	2		40	1	1				N	CONN. POWER SUPPLY	J01		
	2		40	1	2				N	CONN. POWER SUPPLY	J01		
CHC4-N	6		6	2	7				N	CONN. TO CHARGE CAPACITORS	J02		
	6		6	3	5				N	CONN. FROM CHARGE CAPACITORS	J03		
	6		7	4	2				L	CHARGE CAPACITOR CHC4			
	6		40	1	8				N	CONN. POWER SUPPLY	J01		
	6		40	1	9				N	CONN. POWER SUPPLY	J01		
CHC4-P	4		6	2	3				N	CONN. TO CHARGE CAPACITORS	J02		
	4		6	3	1				N	CONN. FROM CHARGE CAPACITORS	J03		
	4		7	4	1				L	CHARGE CAPACITOR CHC4			
			40	1	4				N	CONN. POWER SUPPLY	J01		
	4		40	1	6				N	CONN. POWER SUPPLY	J01		

* STUDER REVOX AG * SIGNAL WIRE LIST * 91/07/18 * 17:00 * PAGE 64 *
* 1.807.060.00 * STUDER A 807 TAPE RECORDER 4 CH * * 91/07/10 - 00 *

SIGNAL NAME	COLOR	MI	ASY	GRP	ELM	PNT	S	LV	TYPE	DESCRIPTION OF ELEMENT		REMARK	ELEMENT NR.
DS-CLK	9		10	9	10				N	CONN. COMMAND PANEL	J09		
			30	2	3				N	CONN. DISPLAY EL.			
	9		30	3	10				D	CONN. TAPE DECK CTL. J10			
			31	2	3				N	CONN. COMMAND PANEL J02			
	9		51	9	10				N	CONN. COMMAND PANEL	J09		
DS-DATA	9		10	9	9				N	CONN. COMMAND PANEL	J09		
			30	2	4				N	CONN. DISPLAY EL.			
	9		30	3	9				D	CONN. TAPE DECK CTL. J10			
			31	2	4				N	CONN. COMMAND PANEL J02			
	9		51	9	9				N	CONN. COMMAND PANEL	J09		
DS-ENDPL	1		10	9	11				N	CONN. COMMAND PANEL	J09		
			30	2	2				N	CONN. DISPLAY EL.			
	1		30	3	11				D	CONN. TAPE DECK CTL. J10			
			31	2	2				N	CONN. COMMAND PANEL J02			
	1		51	9	11				N	CONN. COMMAND PANEL	J09		
DS-ENLDA	2		10	9	20				N	CONN. COMMAND PANEL	J09		
	2		30	3	14				D	CONN. TAPE DECK CTL. J10			
	2		51	9	20				N	CONN. COMMAND PANEL	J09		
DS-ENLDT	2		10	9	12				N	CONN. COMMAND PANEL	J09		
	2		30	3	13				D	CONN. TAPE DECK CTL. J10			
	2		51	9	12				N	CONN. COMMAND PANEL	J09		
DS-ENMTX	9		10	9	19				N	CONN. COMMAND PANEL	J09		
	9		30	3	12				D	CONN. TAPE DECK CTL. J10			
	9		51	9	19				N	CONN. COMMAND PANEL	J09		
DSP-DTCT	3		1	4	3				B	TC REMOTE DISPLAY CONNECTOR			
	3		70	6	2				N	CONN. REMOTE DISPLAY	J06		
ERAHH-TC	9		39	1	31				R	CONN. AUDIO ELECTRONICS			
			70	1	3				N	TO HEAD BLOCK CONNECTOR	J01		
			70	11	4					CONN. TIME CODE WRITE/READ UNIT	J11		
			70	21	4					TIME CODE WRITE/READ UNIT			
ERAHH-01	1		39	1	12				R	CONN. AUDIO ELECTRONICS			
	1		41	4	3				N	CONN. HEAD BLOCK, RECORD			
ERAHH-02	3		39	1	13				R	CONN. AUDIO ELECTRONICS			
	3		42	4	3				N	CONN. HEAD BLOCK, RECORD			
ERAHH-03	1		39	1	14				R	CONN. AUDIO ELECTRONICS			
	1		43	4	3				N	CONN. HEAD BLOCK, RECORD			
ERAHH-04	1		39	1	42				R	CONN. AUDIO ELECTRONICS			
	1		44	4	3				N	CONN. HEAD BLOCK, RECORD			
ERAHL-TC	6		39	1	32				R	CONN. AUDIO ELECTRONICS			
			70	1	1				N	TO HEAD BLOCK CONNECTOR	J01		
			70	11	5					CONN. TIME CODE WRITE/READ UNIT	J11		
			70	21	5					TIME CODE WRITE/READ UNIT			

* STUDER REVOX AG * SIGNAL WIRE LIST * 91/07/18 * 17:00 * PAGE 65 *
* 1.807.060.00 * STUDER A 807 TAPE RECORDER 4 CH * * 91/07/10 - 00 *

SIGNAL NAME	COLOR	MI	ASY	GRP	ELM	PNT	S	LV	TYPE	DESCRIPTION OF ELEMENT		REMARK	ELEMENT NR.
ERAHL-01	9		39	1	27				R	CONN. AUDIO ELECTRONICS			
	9		41	4	5				N	CONN. HEAD BLOCK, RECORD			
ERAHL-02	2		39	1	28				R	CONN. AUDIO ELECTRONICS			
	2		42	4	5				N	CONN. HEAD BLOCK, RECORD			
ERAHL-03	9		39	1	29				R	CONN. AUDIO ELECTRONICS			
	9		43	4	5				N	CONN. HEAD BLOCK, RECORD			
ERAHL-04	9		39	1	41				R	CONN. AUDIO ELECTRONICS			
	9		44	4	5				N	CONN. HEAD BLOCK, RECORD			
ERASC-TC	S		39	1	17				R	CONN. AUDIO ELECTRONICS			
			70	1	4				N	TO HEAD BLOCK CONNECTOR	J01		
EX-ENLDA	5		1	8	21				B	CONN. EXT. VU PANEL, CTL			
	5		10	8	16				N	CONN. EXT. VU-PANEL	J08		
	5		94	1	17				N	CONN. VU PANEL, CTL			
EX-ENLDT			10	8	9				N	CONN. EXT. VU-PANEL	J08		
EX-ENMTX	9		1	8	20				B	CONN. EXT. VU PANEL, CTL			
	9		10	8	15				N	CONN. EXT. VU-PANEL	J08		
	9		94	1	19				N	CONN. VU PANEL, CTL			
EXT-CLK	7		1	8	19				B	CONN. EXT. VU PANEL, CTL			
	7		10	8	8				N	CONN. EXT. VU-PANEL	J08		
	7		94	1	20				N	CONN. VU PANEL, CTL			
EXT-DATA	8		1	8	18				B	CONN. EXT. VU PANEL, CTL			
	8		10	8	7				N	CONN. EXT. VU-PANEL	J08		
	8		94	1	18				N	CONN. VU PANEL, CTL			
EXT-D4	4		1	8	5				B	CONN. EXT. VU PANEL, CTL			
	4		10	8	6				N	CONN. EXT. VU-PANEL	J08		
	4		94	1	12				N	CONN. VU PANEL, CTL			
EXT-D5	5		1	8	6				B	CONN. EXT. VU PANEL, CTL			
	5		10	8	5				N	CONN. EXT. VU-PANEL	J08		
	5		94	1	4				N	CONN. VU PANEL, CTL			
EXT-D6	6		1	8	7				B	CONN. EXT. VU PANEL, CTL			
	6		10	8	4				N	CONN. EXT. VU-PANEL	J08		
	6		94	1	3				N	CONN. VU PANEL, CTL			
EXT-D7	7		1	8	8				B	CONN. EXT. VU PANEL, CTL			
	7		10	8	3				N	CONN. EXT. VU-PANEL	J08		
	7		94	1	9				N	CONN. VU PANEL, CTL			
EXT-FAD			10	8	1				N	CONN. EXT. VU-PANEL	J08		
F-ACA40	1		6	5	2				Y	CONN. RECTIFIER DZ2			
	1		8	1	1				J	RECTIFIER DZ2			
F-ACB40	8		6	5	1				Y	CONN. RECTIFIER DZ2			
	8		8	1	2				J	RECTIFIER DZ2			

* STUDER REVOX AG * S I G N A L W I R E L I S T * 91/07/18 * 17:00 * P A G E 66 *
* 1.807.060.00 * STUDER A 807 TAPE RECORDER 4 CH * * 91/07/10 - 00 *

SIGNAL NAME	COLOR	MI	ASY	GRP	ELM	PNT	S	LV	TYPE	DESCRIPTION OF ELEMENT		REMARK	ELEMENT NR.
F-LINE1	1			1	1	5				CONNECTOR POWER INPUT	P01		
	1			2	1	1			J	POWER SWITCH			
FAD1	1			1	6	11			B	PARALLEL REMOTE CONNECTOR			
	1			10	11	1			N	CONN. PARALLEL REMOTE A	J11		
	1			51	11	1			N	CONN. PARALLEL REMOTE A	J11		
FAD2	2			1	6	12			B	PARALLEL REMOTE CONNECTOR			
	2			10	11	2			N	CONN. PARALLEL REMOTE A	J11		
	2			51	11	2			N	CONN. PARALLEL REMOTE A	J11		
GND	5-4			1	1	3				CONNECTOR POWER INPUT	P01		
				1	2	1				CONN. GROUND			
	0			5	1	9			Y	PRIMARY	P01		
				10	15	1			Y	CONN. GROUND (TP 12)			
HALL1A	7			20	3	4			N	CONN. CAPSTAN TACHO	J03		
	7			21	2	4			N	CONN. CAPSTAN CTL, J03			
HALL1B	8			20	3	5			N	CONN. CAPSTAN TACHO	J03		
	8			21	2	5			N	CONN. CAPSTAN CTL, J03			
HALL2A	5			20	3	6			N	CONN. CAPSTAN TACHO	J03		
	5			21	2	6			N	CONN. CAPSTAN CTL, J03			
HALL2B	6			20	3	7			N	CONN. CAPSTAN TACHO	J03		
	6			21	2	7			N	CONN. CAPSTAN CTL, J03			
HALL3A	3			20	3	8			N	CONN. CAPSTAN TACHO	J03		
	3			21	2	8			N	CONN. CAPSTAN CTL, J03			
HALL3B	4			20	3	9			N	CONN. CAPSTAN TACHO	J03		
	4			21	2	9			N	CONN. CAPSTAN CTL, J03			
IR-REFEX	3			1	6	13			B	PARALLEL REMOTE CONNECTOR			
	3			1	7	13			B	SYNCHRONIZER CONNECTOR			
	3			10	11	3			N	CONN. PARALLEL REMOTE A	J11		
	3			10	13	3			N	CONN. SYNCHRONIZER A	J13		
	3			51	11	3			N	CONN. PARALLEL REMOTE A	J11		
K-BRAKE	1			10	7	1			N	CONN. SOLENOIDS	J07		
	1			25	1	1			X	CONN. TAPE DECK CTL. J07			
K-LIFT	8			10	7	3			N	CONN. SOLENOIDS	J07		
	8			27	1	2			X	CONN. TAPE DECK CTL. J07			
K-PRESS	9			10	7	5			N	CONN. SOLENOIDS	J07		
	9			26	1	2			X	CONN. TAPE DECK CTL. J07			
LINE1	1			1	1	1				CONNECTOR POWER INPUT	P01		
	1			1	1	4				CONNECTOR POWER INPUT	P01		
LINE2	6			1	1	2				CONNECTOR POWER INPUT	P01		
	6			2	1	2			J	POWER SWITCH			

* STUDER REVOX AG * S I G N A L W I R E L I S T * 91/07/18 * 17:00 * P A G E 67 *
* 1.807.060.00 * STUDER A 807 TAPE RECORDER 4 CH * * 91/07/10 - 00 *

SIGNAL NAME	COLOR	MI	ASY	GRP	ELM	PNT	S	LV	TYPE	DESCRIPTION OF ELEMENT		REMARK	ELEMENT NR.
LINFA-TC				70	11	15				CONN. TIME CODE WRITE/READ UNIT	J11		
				70	21	15				TIME CODE WRITE/READ UNIT			
LINFB-TC				70	11	16				CONN. TIME CODE WRITE/READ UNIT	J11		
				70	21	16				TIME CODE WRITE/READ UNIT			
LOUFA-TC				70	11	17				CONN. TIME CODE WRITE/READ UNIT	J11		
				70	21	17				TIME CODE WRITE/READ UNIT			
LOUFB-TC				70	11	18				CONN. TIME CODE WRITE/READ UNIT	J11		
				70	21	18				TIME CODE WRITE/READ UNIT			
MRX-A				30	4	9			N	CONN. KEYS MATRIX			
MRX-B				30	4	10			N	CONN. KEYS MATRIX			
MRX-C				30	4	11			N	CONN. KEYS MATRIX			
MRX-D				30	4	12			N	CONN. KEYS MATRIX			
MRX-E	3			30	4	13			N	CONN. KEYS MATRIX			
	3			70	7	5			N	CONN. KEYBOARD CTL.	J07		
MRX-F	4			30	4	14			N	CONN. KEYS MATRIX			
	4			70	7	1			N	CONN. KEYBOARD CTL.	J07		
MRX-G				30	4	15			N	CONN. KEYS MATRIX			
MRX-H				30	4	16			N	CONN. KEYS MATRIX			
MS-C76K	1			10	6	1			N	CONN. SPOOLING MOTOR CTL.	J06		
	1			11	3	6			N	CONN. TAPE DECK CTL.	J03		
MS-DIREN	5			10	6	5			N	CONN. SPOOLING MOTOR CTL.	J06		
	5			11	3	13			N	CONN. TAPE DECK CTL.	J03		
MS-MVCLK	4			10	6	14			N	CONN. SPOOLING MOTOR CTL.	J06		
	4			11	3	2			N	CONN. TAPE DECK CTL.	J03		
MS-MVDIR	3			10	6	13			N	CONN. SPOOLING MOTOR CTL.	J06		
	3			11	3	5			N	CONN. TAPE DECK CTL.	J03		
MS-ON	6			10	6	6			N	CONN. SPOOLING MOTOR CTL.	J06		
	6			11	3	15			N	CONN. TAPE DECK CTL.	J03		
MS-PRESS	2			10	6	2			N	CONN. SPOOLING MOTOR CTL.	J06		
	2			11	3	1			N	CONN. TAPE DECK CTL.	J03		
MS-REFA	8			10	6	8			N	CONN. SPOOLING MOTOR CTL.	J06		
	8			11	3	9			N	CONN. TAPE DECK CTL.	J03		
MS-REFB	7			10	6	7			N	CONN. SPOOLING MOTOR CTL.	J06		
	7			11	3	11			N	CONN. TAPE DECK CTL.	J03		
MS-REW	4			10	6	4			N	CONN. SPOOLING MOTOR CTL.	J06		
	4			11	3	17			N	CONN. TAPE DECK CTL.	J03		

* STUDER REVOX AG * S I G N A L W I R E L I S T * 91/07/18 * 17:00 * P A G E 68 *

* 1.807.060.00 * STUDER A 807 TAPE RECORDER 4 CH * * 91/07/10 - 00 *

SIGNAL NAME	COLOR	MI	ASY	GRP	ELM	PNT	S	LV	TYPE	DESCRIPTION OF ELEMENT		REMARK	ELEMENT NR.
MS-SHUTL	3			10	6	3			N	CONN. SPOOLING MOTOR CTL.	J06		
	3			11	3	20			N	CONN. TAPE DECK CTL.	J03		
MV-CLK1	1			10	3	5			N	CONN. MOVE SENSOR	J03		
	0			10	16	1			Y	CONN. TESTPOINT (TP 05)			
	1			24	1	3			N	CONN. TAPE DECK CTL. J03			
	0			70	2	10			N	CONN. AUDIO CONTROL	J02		
MV-CLK2	2			10	3	3			N	CONN. MOVE SENSOR	J03		
	2			24	1	1			N	CONN. TAPE DECK CTL. J03			
M1-R				11	7	2			N	CONN. SP. MOTOR FILTER, LEFT	J07		
				11	7	3			N	CONN. SP. MOTOR FILTER, LEFT	J07		
				12	1	2			N	CONN. SP. MOTOR CTL,	P01		
				12	1	3			N	CONN. SP. MOTOR CTL,	P01		
	2			12	3	1				CONN. SP. MOTOR LEFT	J01		
	2			15	1	1				CONN. SP. MOTOR FILTER, J01			
M1-S				11	7	4			N	CONN. SP. MOTOR FILTER, LEFT	J07		
				11	7	5			N	CONN. SP. MOTOR FILTER, LEFT	J07		
				12	1	4			N	CONN. SP. MOTOR CTL,	P01		
				12	1	5			N	CONN. SP. MOTOR CTL,	P01		
	9			12	3	2				CONN. SP. MOTOR LEFT	J01		
	9			15	1	2				CONN. SP. MOTOR FILTER, J01			
M1-T				11	7	8			N	CONN. SP. MOTOR FILTER, LEFT	J07		
				11	7	9			N	CONN. SP. MOTOR FILTER, LEFT	J07		
				12	1	8			N	CONN. SP. MOTOR CTL,	P01		
				12	1	9			N	CONN. SP. MOTOR CTL,	P01		
	6			12	3	3				CONN. SP. MOTOR LEFT	J01		
	6			15	1	3				CONN. SP. MOTOR FILTER, J01			
M1-TACHO	1			10	6	11			N	CONN. SPOOLING MOTOR CTL.	J06		
	1			11	3	8			N	CONN. TAPE DECK CTL.	J03		
M1-TSENS	4			11	5	4			N	CONN. SP. MOTOR TACHO, LEFT	J05		
	4			17	1	3			N	CONN. SP. MOTOR CTL, J05			
M2-R				11	8	1			N	CONN. SP. MOTOR FILTER, RIGHT	J08		
				11	8	2			N	CONN. SP. MOTOR FILTER, RIGHT	J08		
				12	2	1			N	CONN. SP. MOTOR CTL,	P02		
				12	2	2			N	CONN. SP. MOTOR CTL,	P02		
	2			12	4	1				CONN. SP. MOTOR RIGHT	J02		
	2			16	1	1				CONN. SP. MOTOR FILTER, J01			
M2-REFAN	0			10	6	10			N	CONN. SPOOLING MOTOR CTL.	J06		
	0			11	3	14			N	CONN. TAPE DECK CTL.	J03		
M2-S				11	8	3			N	CONN. SP. MOTOR FILTER, RIGHT	J08		
				11	8	4			N	CONN. SP. MOTOR FILTER, RIGHT	J08		
				12	2	3			N	CONN. SP. MOTOR CTL,	P02		
				12	2	4			N	CONN. SP. MOTOR CTL,	P02		
	9			12	4	2				CONN. SP. MOTOR RIGHT	J02		
	9			16	1	2				CONN. SP. MOTOR FILTER, J01			

* STUDER REVOX AG * S I G N A L W I R E L I S T * 91/07/18 * 17:00 * P A G E 69 *

* 1.807.060.00 * STUDER A 807 TAPE RECORDER 4 CH * * 91/07/10 - 00 *

SIGNAL NAME	COLOR	MI	ASY	GRP	ELM	PNT	S	LV	TYPE	DESCRIPTION OF ELEMENT		REMARK	ELEMENT NR.
M2-T				11	8	5			N	CONN. SP. MOTOR FILTER, RIGHT	J08		
				11	8	6			N	CONN. SP. MOTOR FILTER, RIGHT	J08		
				12	2	5			N	CONN. SP. MOTOR CTL,	P02		
				12	2	6			N	CONN. SP. MOTOR CTL,	P02		
	6			12	4	3				CONN. SP. MOTOR RIGHT	J02		
	6			16	1	3				CONN. SP. MOTOR FILTER, J01			
M2-TACHO	2			10	6	12			N	CONN. SPOOLING MOTOR CTL.	J06		
	2			11	3	7			N	CONN. TAPE DECK CTL.	J03		
M2-TSENS	4			11	4	4			N	CONN. SP. MOTOR TACHO, RIGHT	J04		
	4			18	1	3			N	CONN. SP. MOTOR CTL, J04			
M3-CLK	4			10	2	4			N	CONN. CAPSTAN CTL.	J02		
	4			20	1	1			N	CONN. TAPE DECK CTL.	J01		
M3-C76K	1			10	2	1			N	CONN. CAPSTAN CTL.	J02		
	1			20	1	4			N	CONN. TAPE DECK CTL.	J01		
M3-DATA	5			10	2	5			N	CONN. CAPSTAN CTL.	J02		
	5			20	1	2			N	CONN. TAPE DECK CTL.	J01		
M3-EN	3			10	2	3			N	CONN. CAPSTAN CTL.	J02		
	3			20	1	3			N	CONN. TAPE DECK CTL.	J01		
M3-R	9			20	4	1			N	CONN. CAPSTAN MOTOR	J04		
	9			21	1	1			N	CONN. CAPSTAN CTL, J04			
M3-REFEX	8			10	2	8			N	CONN. CAPSTAN CTL.	J02		
	8			20	1	13			N	CONN. TAPE DECK CTL.	J01		
M3-S	2			20	4	3			N	CONN. CAPSTAN MOTOR	J04		
	2			21	1	3			N	CONN. CAPSTAN CTL, J04			
M3-SYNC	7			10	2	7			N	CONN. CAPSTAN CTL.	J02		
	7			20	1	5			N	CONN. TAPE DECK CTL.	J01		
M3-T	0			20	4	4			N	CONN. CAPSTAN MOTOR	J04		
	0			21	1	4			N	CONN. CAPSTAN CTL, J04			
M3-TACHO	6			10	2	6			N	CONN. CAPSTAN CTL.	J02		
	6			20	1	14			N	CONN. TAPE DECK CTL.	J01		
M3-9600	2			10	2	2			N	CONN. CAPSTAN CTL.	J02		
	2			20	1	12			N	CONN. TAPE DECK CTL.	J01		
OR-CMCLK	1			1	7	11			B	SYNCHRONIZER CONNECTOR			
	1			10	13	1			N	CONN. SYNCHRONIZER A	J13		
OR-MVCLK	5			1	7	7			B	SYNCHRONIZER CONNECTOR			
	5			10	13	5			N	CONN. SYNCHRONIZER A	J13		
OR-MVDIR	6			1	7	10			B	SYNCHRONIZER CONNECTOR			
	6			10	13	6			N	CONN. SYNCHRONIZER A	J13		

STUDER REVOX AG * SIGNAL WIRE LIST * 91/07/18 * 17:00 * PAGE 70

1.807.060.00 * STUDER A 807 TAPE RECORDER 4 CH * 91/07/10 - 00

SIGNAL NAME	COLOR	MI	ASY	GRP	ELM	PNT	S	LV	TYPE	DESCRIPTION OF ELEMENT		REMARK	ELEMENT NR.
OR-SYENB	8			1	7	12			B	SYNCHRONIZER CONNECTOR			
	8			10	14	8			N	CONN. SYNCHRONIZER B	J14		
PRIMW-1	1			4	1	5			L	VOLTAGE SELECTOR			
	1			5	1	1			Y	PRIMARY	P01		
PRIMW-3	3			4	1	2			L	VOLTAGE SELECTOR			
	3			5	1	3			Y	PRIMARY	P01		
PRIMW-4	4-4			4	1	4A			L	VOLTAGE SELECTOR			
	4			5	1	4			Y	PRIMARY	P01		
PRIMW-5	5			4	1	6			L	VOLTAGE SELECTOR			
	5			5	1	5			Y	PRIMARY	P01		
PRIMW-6	6-4			4	1	4B			L	VOLTAGE SELECTOR			
	6			5	1	6			Y	PRIMARY	P01		
PRIMW-7	7			4	1	3			L	VOLTAGE SELECTOR			
	7			5	1	7			Y	PRIMARY	P01		
R-SHUTL1	1			11	6	1			N	CONN. SHUTTLE CTL.	J06		
	1			30	7	1			L	SHUTTLE POTMETER			
R-SHUTL2	2			11	6	2			N	CONN. SHUTTLE CTL.	J06		
	2			30	7	2			L	SHUTTLE POTMETER			
R-SHUTL3	3			11	6	4			N	CONN. SHUTTLE CTL.	J06		
	3			30	7	3			L	SHUTTLE POTMETER			
R-VRSPD	8			20	2	3			N	CONN. VARI SPEED CTL.	J02		
	8			35	7	2			L	VARIO SPEED POTM.			
RCVDATA	1			1	3	8			B	SERIAL CTL. CONNECTOR			
	1			10	4	1			N	CONN. SERIAL CTL.	J04		
	1			70	4	1			N	CONN. TAPE DECK SERIAL CTL.	J04		
	1			70	5	1			N	CONN. RS 232	J05		
RECHH-TC	9			39	1	1			R	CONN. AUDIO ELECTRONICS			
				70	1	6			N	TO HEAD BLOCK CONNECTOR	J01		
				70	11	7				CONN. TIME CODE WRITE/READ UNIT	J11		
				70	21	7				TIME CODE WRITE/READ UNIT			
RECHH-01	8			39	1	9			R	CONN. AUDIO ELECTRONICS			
	8			41	4	1			N	CONN. HEAD BLOCK, RECORD			
RECHH-02	1			39	1	10			R	CONN. AUDIO ELECTRONICS			
	1			42	4	1			N	CONN. HEAD BLOCK, RECORD			
RECHH-03	8			39	1	11			R	CONN. AUDIO ELECTRONICS			
	8			43	4	1			N	CONN. HEAD BLOCK, RECORD			
RECHH-04	8			39	1	40			R	CONN. AUDIO ELECTRONICS			
	8			44	4	1			N	CONN. HEAD BLOCK, RECORD			

STUDER REVOX AG * SIGNAL WIRE LIST * 91/07/18 * 17:00 * PAGE 71

1.807.060.00 * STUDER A 807 TAPE RECORDER 4 CH * 91/07/10 - 00

SIGNAL NAME	COLOR	MI	ASY	GRP	ELM	PNT	S	LV	TYPE	DESCRIPTION OF ELEMENT		REMARK	ELEMENT NR.
RECHL-TC	6			39	1	2			R	CONN. AUDIO ELECTRONICS			
				70	1	5			N	TO HEAD BLOCK CONNECTOR	J01		
				70	11	8				CONN. TIME CODE WRITE/READ UNIT	J11		
				70	21	8				TIME CODE WRITE/READ UNIT			
RECHL-01	7			39	1	24			R	CONN. AUDIO ELECTRONICS			
	7			41	4	2			N	CONN. HEAD BLOCK, RECORD			
RECHL-02	0			39	1	25			R	CONN. AUDIO ELECTRONICS			
	0			42	4	2			N	CONN. HEAD BLOCK, RECORD			
RECHL-03	7			39	1	26			R	CONN. AUDIO ELECTRONICS			
	7			43	4	2			N	CONN. HEAD BLOCK, RECORD			
RECHL-04	7			39	1	39			R	CONN. AUDIO ELECTRONICS			
	7			44	4	2			N	CONN. HEAD BLOCK, RECORD			
RECSC-TC	S			39	1	16			R	CONN. AUDIO ELECTRONICS			
				70	1	7			N	TO HEAD BLOCK CONNECTOR	J01		
REPHH-TC				70	11	10				CONN. TIME CODE WRITE/READ UNIT	J11		
				70	21	10				TIME CODE WRITE/READ UNIT			
REPHH-01	9			39	1	5			R	CONN. AUDIO ELECTRONICS			
	9			41	5	2			N	CONN. HEAD BLOCK, REPRO			
REPHH-02	9			39	1	6			R	CONN. AUDIO ELECTRONICS			
	9			42	5	2			N	CONN. HEAD BLOCK, REPRO			
REPHH-03	9			39	1	35			R	CONN. AUDIO ELECTRONICS			
	9			43	5	2			N	CONN. HEAD BLOCK, REPRO			
REPHH-04	9			39	1	36			R	CONN. AUDIO ELECTRONICS			
	9			44	5	2			N	CONN. HEAD BLOCK, REPRO			
REPHL-TC				70	11	11				CONN. TIME CODE WRITE/READ UNIT	J11		
				70	21	11				TIME CODE WRITE/READ UNIT			
REPHL-01	6			39	1	4			R	CONN. AUDIO ELECTRONICS			
	6			41	5	1			N	CONN. HEAD BLOCK, REPRO			
REPHL-02	6			39	1	7			R	CONN. AUDIO ELECTRONICS			
	6			42	5	1			N	CONN. HEAD BLOCK, REPRO			
REPHL-03	6			39	1	34			R	CONN. AUDIO ELECTRONICS			
	6			43	5	1			N	CONN. HEAD BLOCK, REPRO			
REPHL-04	6			39	1	37			R	CONN. AUDIO ELECTRONICS			
	6			44	5	1			N	CONN. HEAD BLOCK, REPRO			
REPSC-01	S			39	1	19			R	CONN. AUDIO ELECTRONICS			
	S			41	5	4			N	CONN. HEAD BLOCK, REPRO			
REPSC-02	S			39	1	21			R	CONN. AUDIO ELECTRONICS			
	S			42	5	4			N	CONN. HEAD BLOCK, REPRO			

* STUDER REVOX AG * S I G N A L W I R E L I S T * 91/07/18 * 17:00 * P A G E 72 *

* 1.807.060.00 * STUDER A 807 TAPE RECORDER 4 CH * * 91/07/10 - 00 *

SIGNAL NAME	COLOR	MI	ASY GRP ELM PNT	S	LV	TYPE	DESCRIPTION OF ELEMENT	REMARK	ELEMENT NR.
REPSC-03	S		39 1 20			R	CONN. AUDIO ELECTRONICS		
	S		43 5 4			N	CONN. HEAD BLOCK, REPRO		
REPSC-04	S		39 1 22			R	CONN. AUDIO ELECTRONICS		
	S		44 5 4			N	CONN. HEAD BLOCK, REPRO		
S-LINE1	1		2 1 3			J	POWER SWITCH		
	1		3 1 1			J	MAINS FILTER, INPUT		
S-LINE2	6		2 1 4			J	POWER SWITCH		
	6		3 1 2			J	MAINS FILTER, INPUT		
S-TAPOUT	9		10 6 9			N	CONN. SPOOLING MOTOR CTL. J06		
	9		11 3 3			N	CONN. TAPE DECK CTL. J03		
SF-LINE1	1		3 2 1			J	MAINS FILTER, OUTPUT		
	2-1		4 1 7			L	VOLTAGE SELECTOR		
	2		5 1 2			Y	PRIMARY P01		
SF-LINE2	6		3 2 2			J	MAINS FILTER, OUTPUT		
	6-8		4 1 1			L	VOLTAGE SELECTOR		
	8		5 1 8			Y	PRIMARY P01		
SM-D0	8		10 9 8			N	CONN. COMMAND PANEL J09		
	8		30 3 1			D	CONN. TAPE DECK CTL. J10		
	0		30 4 1			N	CONN. KEYS MATRIX		
	8		51 9 8			N	CONN. COMMAND PANEL J09		
	0		70 7 3			N	CONN. KEYBOARD CTL. J07		
SM-D1	7		10 9 7			N	CONN. COMMAND PANEL J09		
	7		30 3 2			D	CONN. TAPE DECK CTL. J10		
			30 4 2			N	CONN. KEYS MATRIX		
	7		51 9 7			N	CONN. COMMAND PANEL J09		
SM-D2	6		10 9 6			N	CONN. COMMAND PANEL J09		
	6		30 3 3			D	CONN. TAPE DECK CTL. J10		
			30 4 3			N	CONN. KEYS MATRIX		
	6		51 9 6			N	CONN. COMMAND PANEL J09		
SM-D3	5		10 9 5			N	CONN. COMMAND PANEL J09		
	5		30 3 4			D	CONN. TAPE DECK CTL. J10		
			30 4 4			N	CONN. KEYS MATRIX		
	5		51 9 5			N	CONN. COMMAND PANEL J09		
SM-D4	4		10 9 4			N	CONN. COMMAND PANEL J09		
	4		30 3 5			D	CONN. TAPE DECK CTL. J10		
			30 4 5			N	CONN. KEYS MATRIX		
	4		51 9 4			N	CONN. COMMAND PANEL J09		
SM-D5	3		10 9 3			N	CONN. COMMAND PANEL J09		
	3		30 3 6			D	CONN. TAPE DECK CTL. J10		
			30 4 6			N	CONN. KEYS MATRIX		
	3		51 9 3			N	CONN. COMMAND PANEL J09		

* STUDER REVOX AG * S I G N A L W I R E L I S T * 91/07/18 * 17:00 * P A G E 73 *

* 1.807.060.00 * STUDER A 807 TAPE RECORDER 4 CH * * 91/07/10 - 00 *

SIGNAL NAME	COLOR	MI	ASY GRP ELM PNT	S	LV	TYPE	DESCRIPTION OF ELEMENT	REMARK	ELEMENT NR.
SM-D6	2		10 9 2			N	CONN. COMMAND PANEL J09		
	2		30 3 7			D	CONN. TAPE DECK CTL. J10		
			30 4 7			N	CONN. KEYS MATRIX		
	2		51 9 2			N	CONN. COMMAND PANEL J09		
SM-D7	1		10 9 1			N	CONN. COMMAND PANEL J09		
	1		30 3 8			D	CONN. TAPE DECK CTL. J10		
			30 4 8			N	CONN. KEYS MATRIX		
	1		51 9 1			N	CONN. COMMAND PANEL J09		
SN-DATA	2		1 3 2			B	SERIAL CTL. CONNECTOR		
	2		10 4 5			B	CONN. SERIAL CTL. J04		
	2		70 4 5			N	CONN. TAPE DECK SERIAL CTL. J04		
	2		70 5 5			N	CONN. RS 232 J05		
SR-FADRY	5		1 6 6			B	PARALLEL REMOTE CONNECTOR		
	5		10 11 5			N	CONN. PARALLEL REMOTE A J11		
	5		51 11 5			N	CONN. PARALLEL REMOTE A J11		
SR-FORW	0		1 6 21			B	PARALLEL REMOTE CONNECTOR		
	0		1 7 21			B	SYNCHRONIZER CONNECTOR		
	0		10 11 10			N	CONN. PARALLEL REMOTE A J11		
	0		10 13 10			N	CONN. SYNCHRONIZER A J13		
	0		51 11 10			N	CONN. PARALLEL REMOTE A J11		
SR-LIFT	7		1 6 17			B	PARALLEL REMOTE CONNECTOR		
	7		1 7 17			B	SYNCHRONIZER CONNECTOR		
	7		10 11 7			N	CONN. PARALLEL REMOTE A J11		
	7		10 13 7			N	CONN. SYNCHRONIZER A J13		
	7		51 11 7			N	CONN. PARALLEL REMOTE A J11		
SR-LOCST	6		1 6 18			B	PARALLEL REMOTE CONNECTOR		
	6		10 11 6			N	CONN. PARALLEL REMOTE A J11		
	6		51 11 6			N	CONN. PARALLEL REMOTE A J11		
SR-MUTE	4		1 7 18			B	SYNCHRONIZER CONNECTOR		
	4		10 13 4			N	CONN. SYNCHRONIZER A J13		
SR-PLAY	9		1 6 22			B	PARALLEL REMOTE CONNECTOR		
	9		1 7 22			B	SYNCHRONIZER CONNECTOR		
	9		10 11 9			N	CONN. PARALLEL REMOTE A J11		
	9		10 13 9			N	CONN. SYNCHRONIZER A J13		
	9		51 11 9			N	CONN. PARALLEL REMOTE A J11		
SR-REC	3		1 6 19			B	PARALLEL REMOTE CONNECTOR		
	3		1 7 19			B	SYNCHRONIZER CONNECTOR		
	3		10 11 13			N	CONN. PARALLEL REMOTE A J11		
	3		10 13 13			N	CONN. SYNCHRONIZER A J13		
	3		51 11 13			N	CONN. PARALLEL REMOTE A J11		
SR-RESET	5		1 6 10			B	PARALLEL REMOTE CONNECTOR		
	5		10 11 15			N	CONN. PARALLEL REMOTE A J11		
	5		51 11 15			N	CONN. PARALLEL REMOTE A J11		

```
*****************************************************************************************************************
*   STUDER REVOX AG   *    S I G N A L    W I R E    L I S T                  * 91/07/18 * 17:00 *  P A G E  74  *
*****************************************************************************************************************
*            1.807.060.00  * STUDER  A 807 TAPE RECORDER 4 CH *                  * 91/07/10 - 00                  *
*****************************************************************************************************************
```

SIGNAL NAME	COLOR	MI	ASY	GRP	ELM	PNT	S	LV	TYPE	DESCRIPTION OF ELEMENT		REMARK	ELEMENT NR.
SR-REW	1			1	6	20			B	PARALLEL REMOTE CONNECTOR			
	1			1	7	20			B	SYNCHRONIZER CONNECTOR			
	1			10	11	11			N	CONN. PARALLEL REMOTE A	J11		
	1			10	13	11			N	CONN. SYNCHRONIZER A	J13		
	1			51	11	11			N	CONN. PARALLEL REMOTE A	J11		
SR-STOP	2			1	6	23			B	PARALLEL REMOTE CONNECTOR			
	2			1	7	23			B	SYNCHRONIZER CONNECTOR			
	2			10	11	12			N	CONN. PARALLEL REMOTE A	J11		
	2			10	13	12			N	CONN. SYNCHRONIZER A	J13		
	2			51	11	12			N	CONN. PARALLEL REMOTE A	J11		
SR-VRSPD	4			1	6	5			B	PARALLEL REMOTE CONNECTOR			
	4			1	7	5			B	SYNCHRONIZER CONNECTOR			
	4			10	11	14			N	CONN. PARALLEL REMOTE A	J11		
	4			10	13	14			N	CONN. SYNCHRONIZER A	J13		
	4			51	11	14			N	CONN. PARALLEL REMOTE A	J11		
SR-ZLOC	6			1	6	14			B	PARALLEL REMOTE CONNECTOR			
	6			10	11	16			N	CONN. PARALLEL REMOTE A	J11		
	6			51	11	16			N	CONN. PARALLEL REMOTE A	J11		
T-TCINDL				70	11	1				CONN. TIME CODE WRITE/READ UNIT	J11		
				70	21	1				TIME CODE WRITE/READ UNIT			
T-TCOUDL				70	11	2				CONN. TIME CODE WRITE/READ UNIT	J11		
				70	21	2				TIME CODE WRITE/READ UNIT			
T-TCPRES				70	11	14				CONN. TIME CODE WRITE/READ UNIT	J11		
				70	21	14				TIME CODE WRITE/READ UNIT			
TA-ACTTC				70	10	20				CONN. TIME CODE WRITE/READ UNIT	J10		
				70	21	20				TIME CODE WRITE/READ UNIT			
TACHO-3A	1			20	3	1			N	CONN. CAPSTAN TACHO	J03		
	1			21	2	1			N	CONN. CAPSTAN CTL, J03			
TACHO-3B	9			20	3	2			N	CONN. CAPSTAN TACHO	J03		
	9			21	2	2			N	CONN. CAPSTAN CTL, J03			
TC-INA	9			1	12	2				CONN. LINE INPUT, TC			
	9			70	9	2			N	CONN. TIME CODE INPUT/OUTPUT XLR	J09		
TC-INB	6			1	12	3				CONN. LINE INPUT, TC			
	6			70	9	3			N	CONN. TIME CODE INPUT/OUTPUT XLR	J09		
TC-INS	S			1	12	1				CONN. LINE INPUT, TC			
	S			70	9	1			N	CONN. TIME CODE INPUT/OUTPUT XLR	J09		
TC-OUTA	9			1	11	2				CONN. LINE OUTPUT, TC			
	9			70	9	6			N	CONN. TIME CODE INPUT/OUTPUT XLR	J09		
TC-OUTB	6			1	11	3				CONN. LINE OUTPUT, TC			
	6			70	9	7			N	CONN. TIME CODE INPUT/OUTPUT XLR	J09		

* STUDER REVOX AG * S I G N A L W I R E L I S T * 91/07/18 * 17:00 * P A G E 75 *
* 1.807.060.00 * STUDER A 807 TAPE RECORDER 4 CH * * 91/07/10 - 00 *

SIGNAL NAME	COLOR	MI	ASY	GRP	ELM	PNT	S	LV	TYPE	DESCRIPTION OF ELEMENT		REMARK	ELEMENT NR.
TC-OUTS	S			1	11	1				CONN. LINE OUTPUT, TC			
	S			70	9	4			N	CONN. TIME CODE INPUT/OUTPUT XLR	J09		
TD-C307K				70	10	25				CONN. TIME CODE WRITE/READ UNIT	J10		
				70	21	25				TIME CODE WRITE/READ UNIT			
TRS-A	3			10	5	2			N	CONN. TAPE TRANSPARENT SENSOR	J05		
	3			39	1	15			R	CONN. AUDIO ELECTRONICS			
TRS-C	4			10	5	4			N	CONN. TAPE TRANSPARENT SENSOR	J05		
	4			39	1	43			R	CONN. AUDIO ELECTRONICS			
TRS-E	5			10	5	5			N	CONN. TAPE TRANSPARENT SENSOR	J05		
	5			39	1	44			R	CONN. AUDIO ELECTRONICS			
TRS-K	2			10	5	1			N	CONN. TAPE TRANSPARENT SENSOR	J05		
	2			39	1	30			R	CONN. AUDIO ELECTRONICS			
TTA-FORW	6			11	1	6			N	CONN. TAPE TENS. ADJUSTMENT	J01		
	6			14	1	8			N	CONN. SP. MOTOR CTL, J01			
TTA-LIBR	3			11	1	3			N	CONN. TAPE TENS. ADJUSTMENT	J01		
	3			14	1	4			N	CONN. SP. MOTOR CTL, J01			
TTA-PLAY	4			11	1	4			N	CONN. TAPE TENS. ADJUSTMENT	J01		
	4			14	1	10			N	CONN. SP. MOTOR CTL, J01			
TTA-REW	5			11	1	5			N	CONN. TAPE TENS. ADJUSTMENT	J01		
	5			14	1	6			N	CONN. SP. MOTOR CTL, J01			
TTA-SHT1	7			11	1	7			N	CONN. TAPE TENS. ADJUSTMENT	J01		
	7			14	1	1			N	CONN. SP. MOTOR CTL, J01			
TTA-SHT2	8			11	1	8			N	CONN. TAPE TENS. ADJUSTMENT	J01		
	8			14	1	2			N	CONN. SP. MOTOR CTL, J01			
TTA-SHT3	9			11	1	9			N	CONN. TAPE TENS. ADJUSTMENT	J01		
	9			14	1	3			N	CONN. SP. MOTOR CTL, J01			
TX-DSPLY	2			1	4	2			B	TC REMOTE DISPLAY CONNECTOR			
	2			70	6	3			N	CONN. REMOTE DISPLAY	J06		
WR-BIAS1				40	12	7			N	CONN. AUDIO ELECTRONICS CH1			
				41	12	7			N	CONN. AUDIO CTL, J22			
WR-BIAS2				40	22	7			N	CONN. AUDIO ELECTRONICS CH2			
				42	12	7			N	CONN. AUDIO CTL, J42			
WR-BIAS3				40	32	7			N	CONN. AUDIO ELECTRONICS CH3			
				43	12	7			N	CONN. AUDIO CTL, J22			
WR-BIAS4				40	42	7			N	CONN. AUDIO ELECTRONICS CH4			
				44	12	7			N	CONN. AUDIO CTL, J22			
WR-REC1				40	12	13			N	CONN. AUDIO ELECTRONICS CH1			
				41	12	13			N	CONN. AUDIO CTL, J22			

* STUDER REVOX AG * S I G N A L W I R E L I S T * 91/07/18 * 17:00 * P A G E 76 *
* 1.807.060.00 * STUDER A 807 TAPE RECORDER 4 CH * * 91/07/10 - 00 *

SIGNAL NAME	COLOR	MI	ASY	GRP	ELM	PNT	S	LV	TYPE	DESCRIPTION OF ELEMENT	REMARK	ELEMENT NR.
WR-REC2				40	22	13			N	CONN. AUDIO ELECTRONICS CH2		
				42	12	13			N	CONN. AUDIO CTL, J42		
WR-REC3				40	32	13			N	CONN. AUDIO ELECTRONICS CH3		
				43	12	13			N	CONN. AUDIO CTL, J22		
WR-REC4				40	42	13			N	CONN. AUDIO ELECTRONICS CH4		
				44	12	13			N	CONN. AUDIO CTL, J22		
WR-REPR1				40	14	5			N	CONN. AUDIO ELECTRONICS CH1		
				41	14	5			N	CONN. AUDIO CTL, J24		
WR-REPR2				40	24	5			N	CONN. AUDIO ELECTRONICS CH2		
				42	14	5			N	CONN. AUDIO CTL, J44		
WR-REPR3				40	34	5			N	CONN. AUDIO ELECTRONICS CH3		
				43	14	5			N	CONN. AUDIO CTL, J24		
WR-REPR4				40	44	5			N	CONN. AUDIO ELECTRONICS CH1		
				44	14	5			N	CONN. AUDIO CTL, J24		

6. Diagrams Tape Deck Section

ESE = Electrostatically sensitive assembly

Contents **GRP/ELM**

Block Diagram Tape Transport 6/1
Block Diagram Tape Transport Logic 6/2
Tape Transport Wiring Diagram 6/3

Power Supply (2CH) ..... 1.727.301.81 ..... GRP5 ..... 6/5
-Rectifier Board (2CH) ..... 1.727.310.81 ..... GRP6 ..... 6/7

Power Supply (4CH) ..... 1.727.692.81 ..... GRP5 ..... 6/9
-Rectifier Board (4CH) ..... 1.727.691.81 ..... GRP6 ..... 6/11

Tape Deck Electronics ..... 1.727.650.26 ESE ..... GRP10 ..... 6/13
Audio Remote Interface ..... 1.727.652.81 ESE ..... GRP51 ..... 6/19

Filter Board 15 Pins (NRS Control) ..... 1.727.259.00 ..... GRP1 ..... 6/21
Filter Board 25 Pins (Parallel Remote) ..... 1.727.260.00 ..... GRP1 ..... 6/22
Filter Board 25 Pins (Synchronizer Plug) ..... 1.727.265.00 ..... GRP1 ..... 6/23
Filter Board 9 Pins ..... 1.727.258.00 ..... GRP1 ..... 6/24

Tape Move Sensor ..... 1.727.321.00 ..... GRP24 ..... 6/25
Spooling Motor Tacho left ..... 1.727.317.00 ..... GRP17 ..... 6/27
Spooling Motor Tacho right ..... 1.727.318.00 ..... GRP18 ..... 6/27
Tape Tension Sensor ..... 1.727.320.81 ESE ..... GRP13 ..... 6/29

Block Diagram: Spooling Motor Control 6/31
Spooling Motor Control ..... 1.727.340.24 ESE ..... GRP11 ..... 6/33
Tape Tension Adjust Board ..... 1.727.341.00 ..... GRP14 ..... 6/38
Shuttle Control ..... 1.727.180.00 ..... GRP30 ..... 6/39

Block Diagram: Capstan Servo System 6/41
Capstan Motor Control (for all speeds) ..... 1.727.336.20 ESE ..... GRP20 ..... 6/43

Command Panel Board 2VU (2CH) ..... 1.727.662.83 ESE ..... GRP30 ..... 6/47
Command Panel Board 0VU (2CH) ..... 1.727.660.83 ESE ..... GRP30 ..... 6/52
Command Panel Board 1VU (1CH) ..... 1.727.661.83 ESE ..... GRP30 ..... 6/52
Command Panel Board 2/2 (2CH) ..... 1.727.663.83 ESE ..... GRP30 ..... 6/54
Command Panel Board 2VU PBO (2CH) ..... 1.727.664.83 ESE ..... GRP30 ..... 6/55
Command Panel Board 1VU PBO (1CH) ..... 1.727.665.83 ESE ..... GRP30 ..... 6/57
Command Panel Board 0VU (4CH) ..... 1.727.666.83 ESE ..... GRP30 ..... 6/59
Command Panel Board Uncal PBO (2CH) ..... 1.727.667.83 ESE ..... GRP30 ..... 6/61
Command Panel Board Uncal Mono PBO (1CH) ..... 1.727.668.83 ESE ..... GRP30 ..... 6/62
Command Panel Board 2VU TC (2CH) ..... 1.727.762.83 ESE ..... GRP30 ..... 6/63
Command Panel Board 2/2 TC (2CH) ..... 1.727.763.83 ESE ..... GRP30 ..... 6/67
Command Panel Board 0VU TC (2CH) ..... 1.727.760.83 ESE ..... GRP30 ..... 6/68
Command Panel Board TC (4CH) ..... 1.727.766.83 ESE 6/69

Display Board ..... 1.727.370.00 ESE ..... GRP31 ..... 6/71

BLOCK DIAGRAM TAPE TRANSPORT

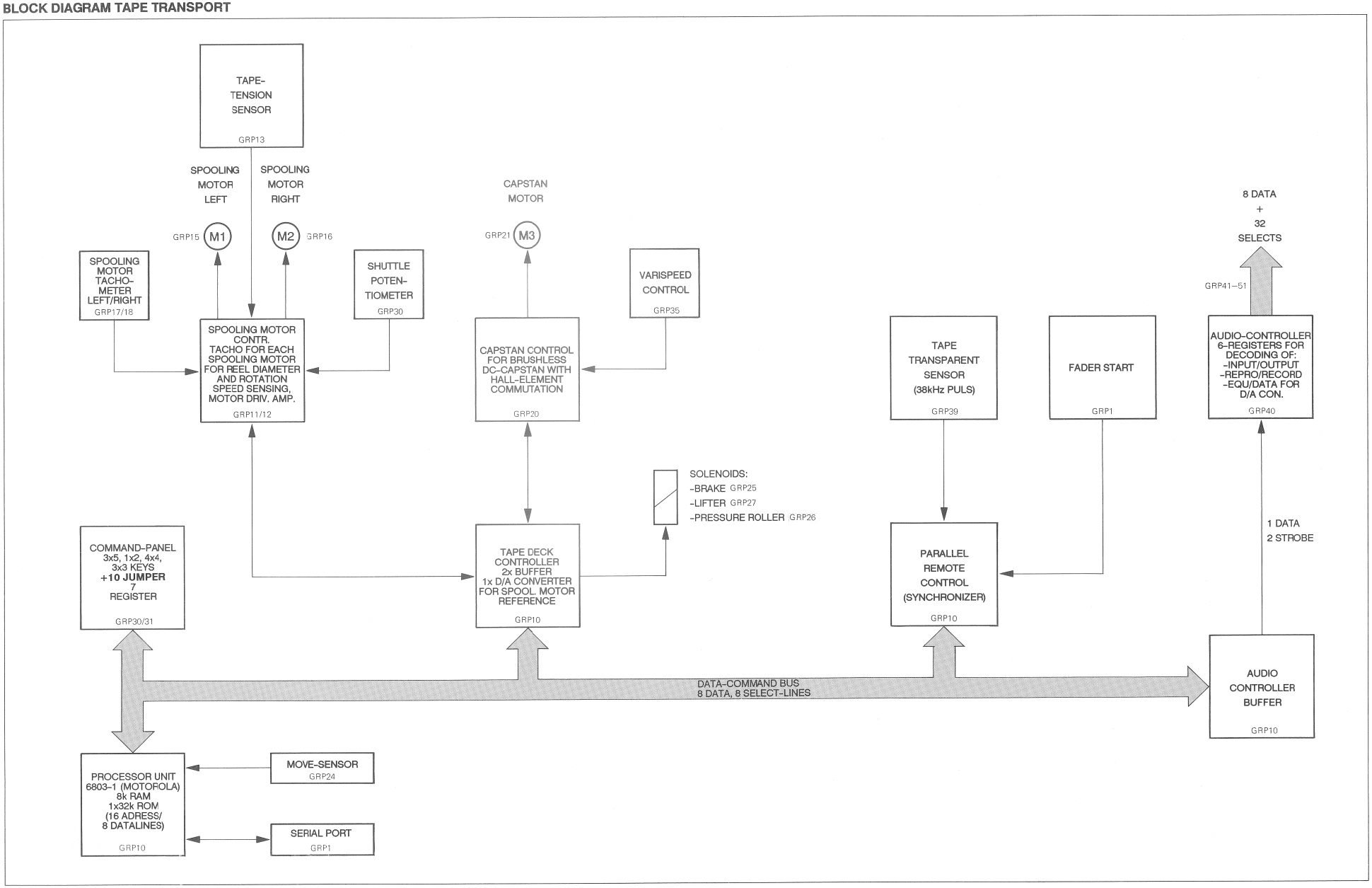

BLOCK DIAGRAM TAPE TRANSPORT LOGIC

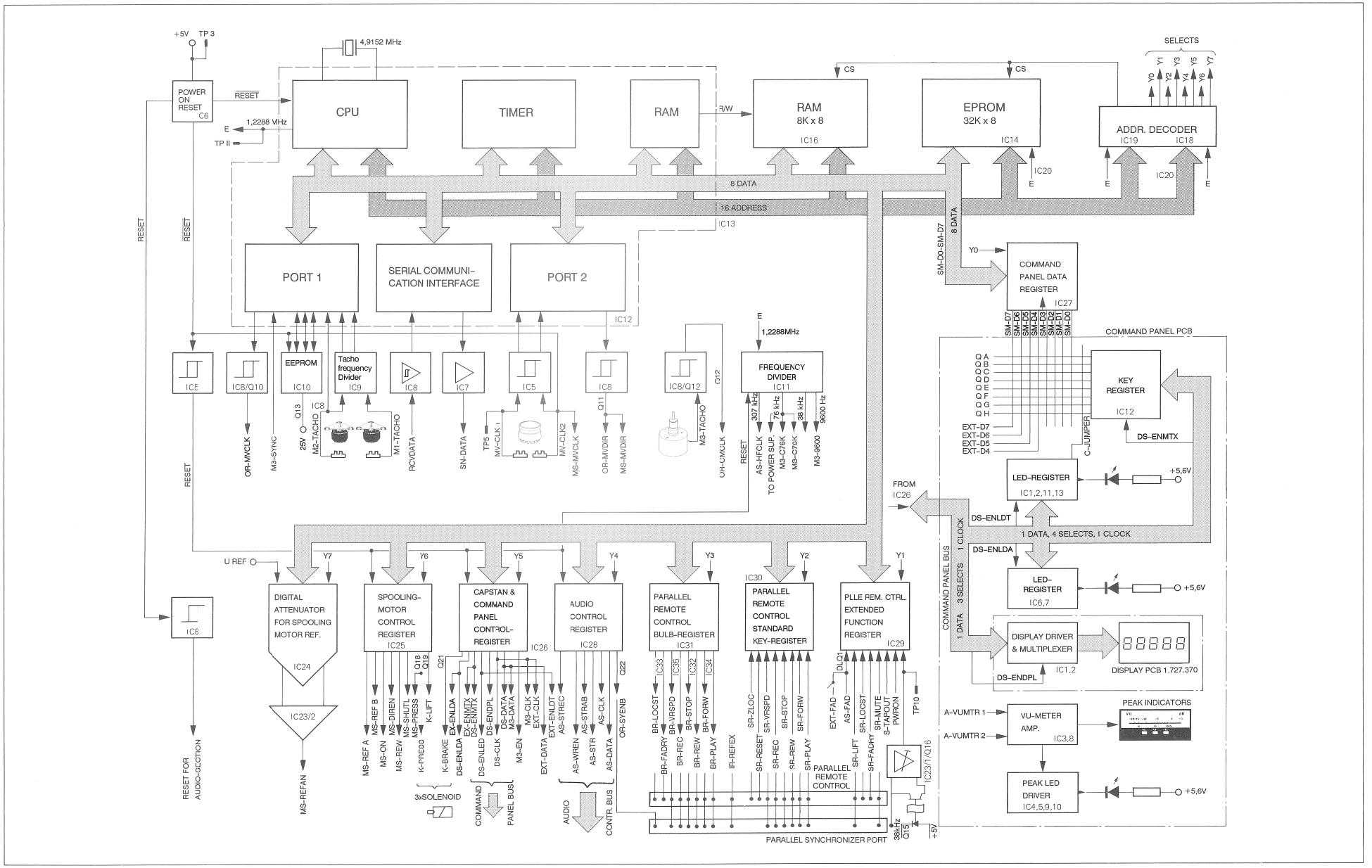

TAPE TRANSPORT WIRING DIAGRAM

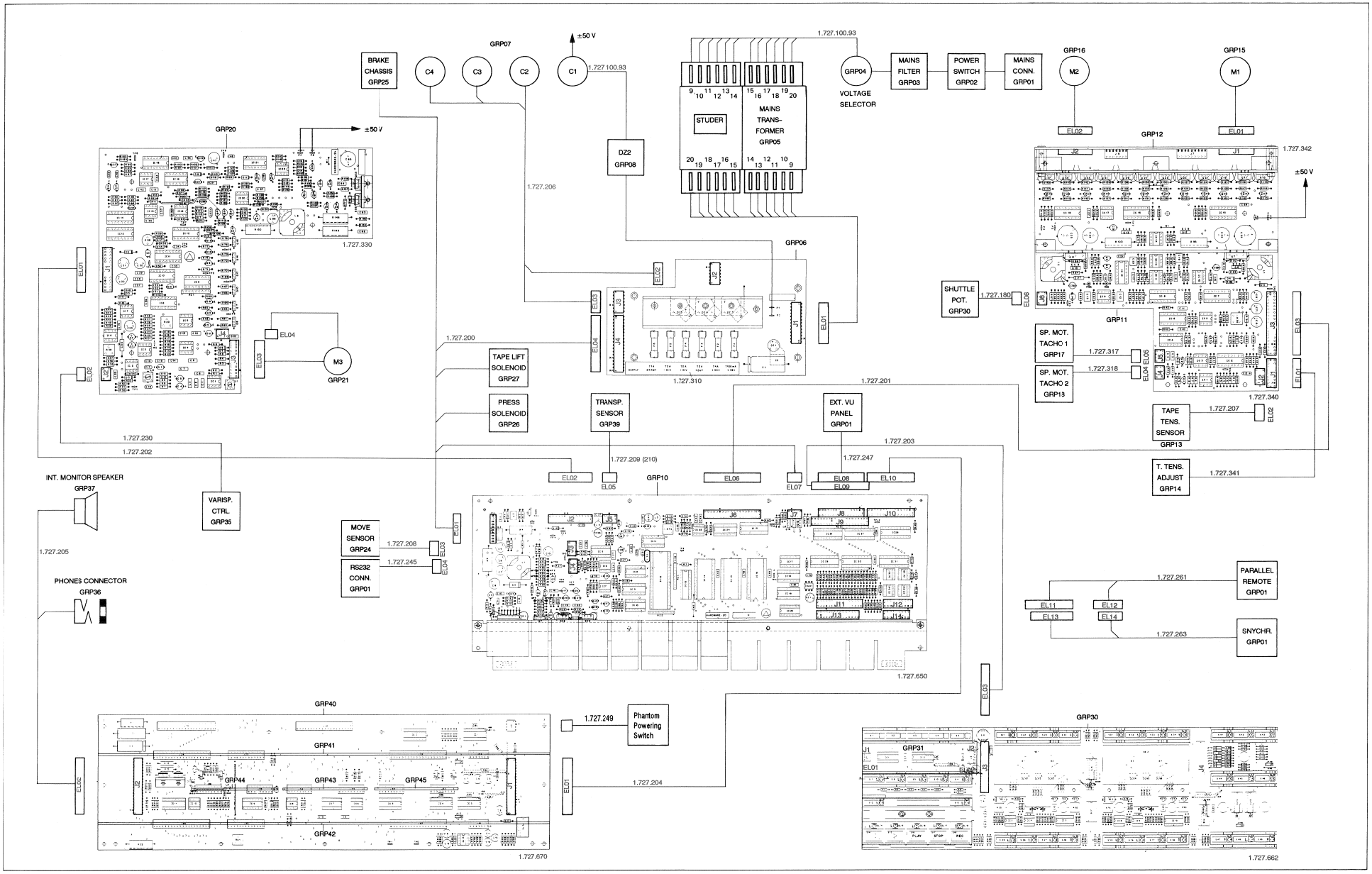

POWER SUPPLY 1.727.301.81 (2CH)
-RECTIFIER BOARD 1.727.310.81 (2CH)

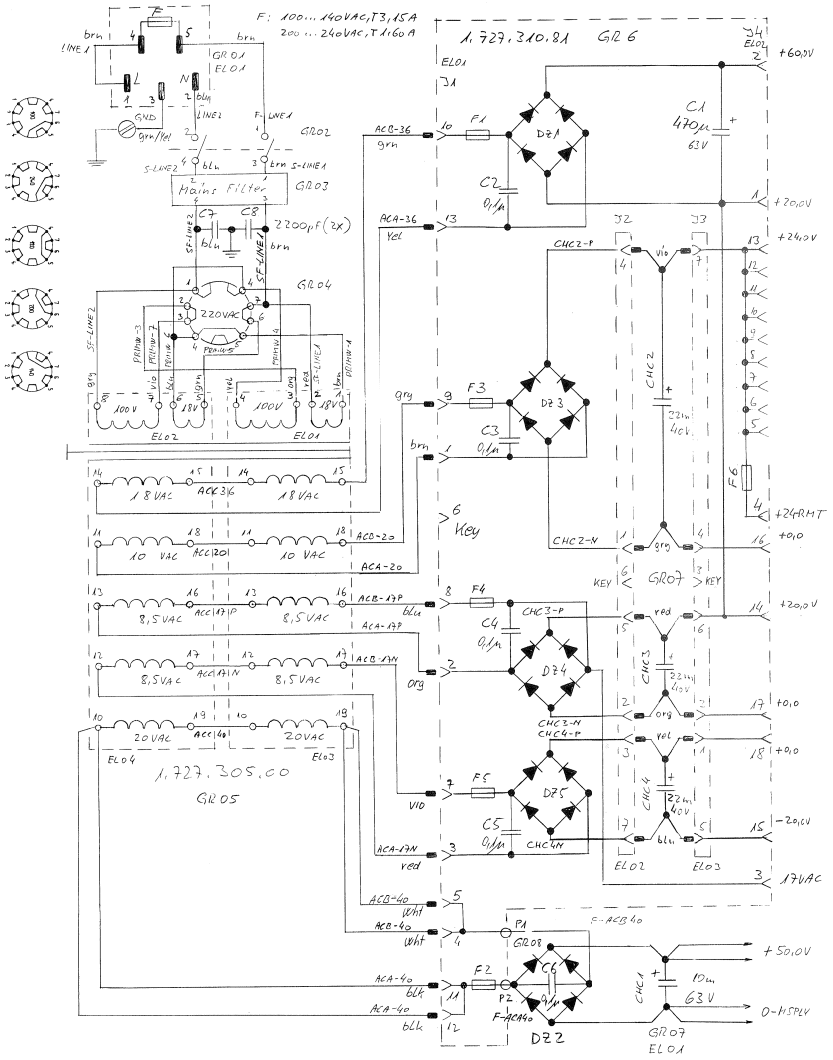

⓪ 29.4.91 WH.	① 6.12.91 WH.	. .	. .	. .
	A 807 GR 2/3/4/5/6			PAGE 1 OF 1
STUDER	POWER SUPPLY			1.727.301.81

POWER SUPPLY 1.727.301.81 (2CH)

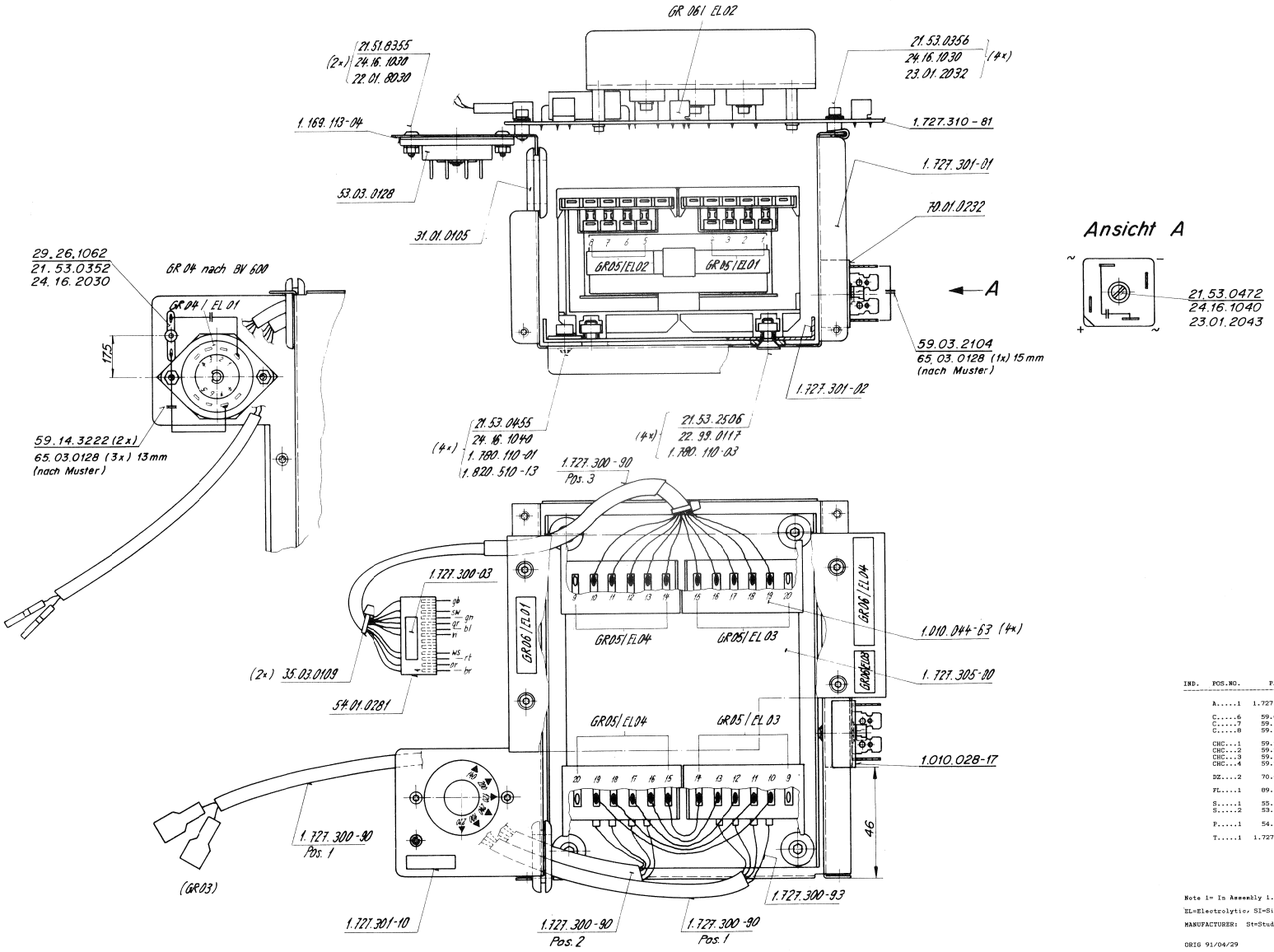

IND.	POS.NO.	PART NO.	VALUE	SPECIFICATIONS / EQUIVALENT	MANUF.
	A.....1	1.727.310.81		Rectifier board	GR06 St
	C.....6	59.03.2104	0.1 uF	250 V PETP	GR06
	C.....7	59.14.3222	2200pF	400 V, Noise suppr. C, Y	GR04
	C.....8	59.14.3222	2200pF	400 V, Noise suppr. C, Y	GR04
	CHC...1	59.26.7103	10 mF	-10% 63 V EL	GR07, Note 1
	CHC...2	59.26.6223	22 mF	-10% 40 V EL	GR07, Note 1
	CHC...3	59.26.6223	22 mF	-10% 40 V EL	GR07, Note 1
	CHC...4	59.26.6223	22 mF	-10% 40 V EL	GR07, Note 1
	DZ....2	70.01.0231		Bridge Rect. 100V, 35A	GR08
	FL....1	89.01.0384		Mains filter, IEC 65 cl.2	GR03, Note 1
	S.....1	55.12.0001		Mains switch	GR02, Note 1
	S.....2	53.03.0128		Voltage selector	GR04
	P.....1	54.42.0003		Mains connector	GR01, Note 1
	T.....1	1.727.305.00		Mains transformer	GR05 St

Note 1= In Assembly 1.727.301 not included

EL=Electrolytic, SI=Silicon

MANUFACTURER: St=Studer

ORIG 91/04/29

S T U D E R (CC) 91/04/29 Wth POWER SUPPLY PL 1.727.301.81 PAGE 1

RECTIFIER BOARD 1.727.310.81 (2CH)

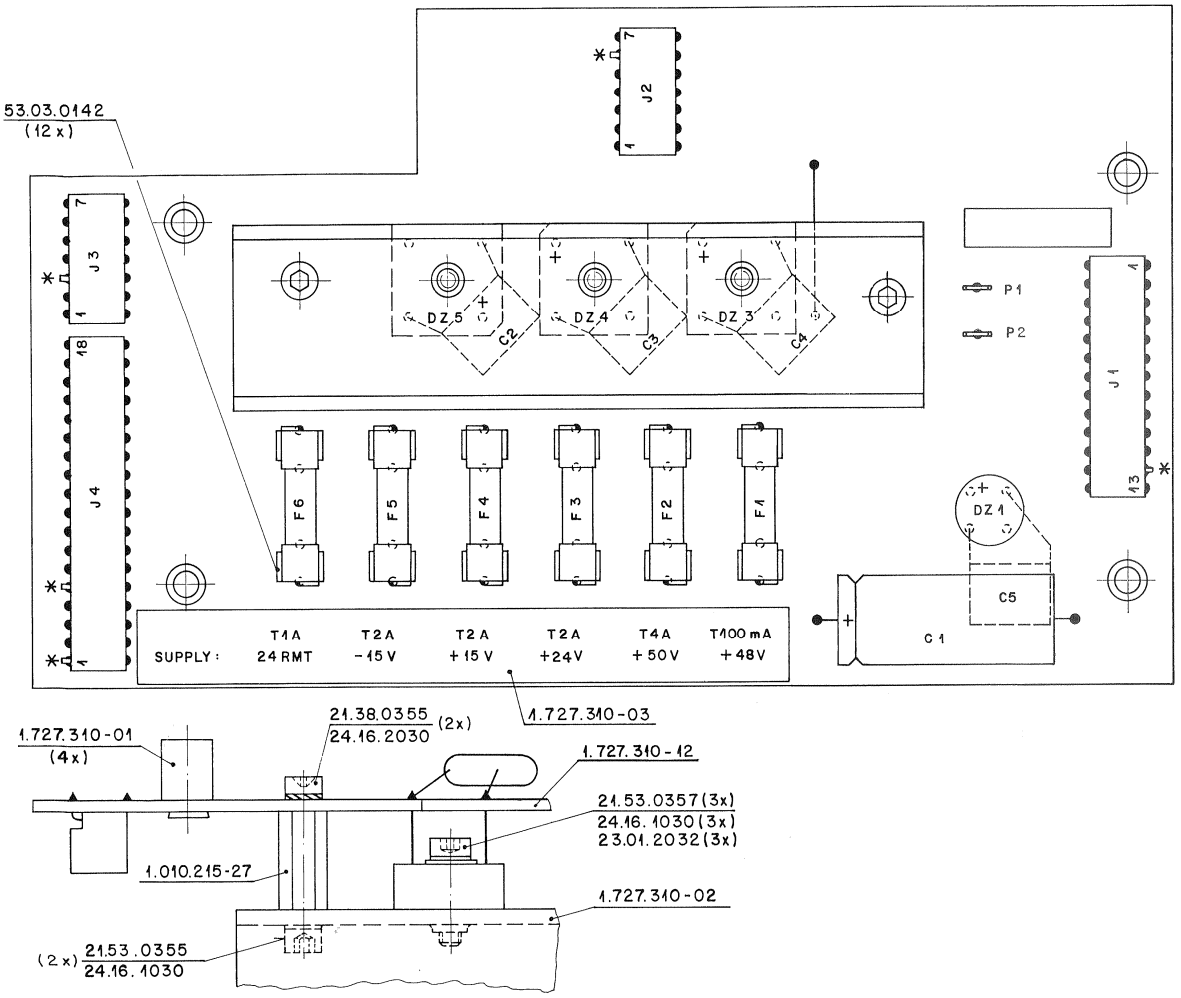

IND.	POS.NO.	PART NO.	VALUE	SPECIFICATIONS / EQUIVALENT	MANUF.
	C.....1	59.25.6471	470 uF	-20% 63 V EL	
	C.....2	59.03.2104	0.1 uF	10% 250 V PETP	
	C.....3	59.03.2104	0.1 uF	10% 250 V PETP	
	C.....4	59.03.2104	0.1 uF	10% 250 V PETP	
	C.....5	59.03.2104	0.1 uF	10% 250 V PETP	
	DZ....1	70.01.0223		Bridge Rect. 250V,0.8A SI	
	DZ....2			not used	
	DZ....3	70.01.0227		Bridge Rect. 280V, 6 A SI	
	DZ....4	70.01.0230		Bridge Rect. 35V, 2 A SI	
	DZ....5	70.01.0230		Bridge Rect. 35V, 2 A SI	
	F.....1	51.01.0107	T100mA	Fuse, 5 * 20	
	F.....2	51.01.0123	T 4 A	Fuse, 5 * 20	
	F.....3	51.01.0120	T 2 A	Fuse, 5 * 20	
	F.....4	51.01.0120	T 2 A	Fuse, 5 * 20	
	F.....5	51.01.0120	T 2 A	Fuse, 5 * 20	
	F.....6	51.01.0117	T 1 A	Fuse, 5 * 20	
	J.....1	54.01.0309	13 Pol	CIS Socket Strip	AMP
	J.....2	54.01.0244	7 Pol	CIS Socket Strip	AMP
	J.....3	54.01.0244	7 Pol	CIS Socket Strip	AMP
	J.....4	54.01.0247	18 Pol	CIS Socket Strip	AMP
	MP....1	1.727.310.12	1 pcs	Rectifier PCB	St
	MP....2	53.03.0142	12 pcs	Fuse holder	
	MP....3	1.727.310.01	4 pcs	Rivet tube	St
	MP....4	1.727.310.02	1 pcs	Heat Sink	St
	MP....5	1.010.215.27	1 pcs	Nut bolt	St
	MP....6	21.38.0355	2 pcs	Screw M3 * 8	
	MP....7	24.16.2030	1 pcs	Flat washer	
	MP....8	21.53.0357	3 pcs	Screw M3 * 12	
	MP....9	23.01.2032	3 pcs	Flat washer	
	MP...10	24.16.1030	4 pcs	Lock washer	
	MP...11	1.727.310.03	1 pcs	Shield	St
	MP...12	1.727.310.10	1 pcs	No. label	St
	MP...13	50.20.1003	1 pcs	Transistor support	

IND.	POS.NO.	PART NO.	VALUE	SPECIFICATIONS / EQUIVALENT	MANUF.
	P.....1	54.02.0320	2.8*0.8	Flat Pin	AMP
	P.....2	54.02.0320	2.8*0.8	Flat Pin	AMP

EL=Electrolytic, SI=Silicon

MANUFACTURER: AMP=AMP, St=Studer

ORIG 91/04/29

POWER SUPPLY 1.727.692.81 (4CH)
-RECTIFIER BOARD 1.727.691.81 (4CH)

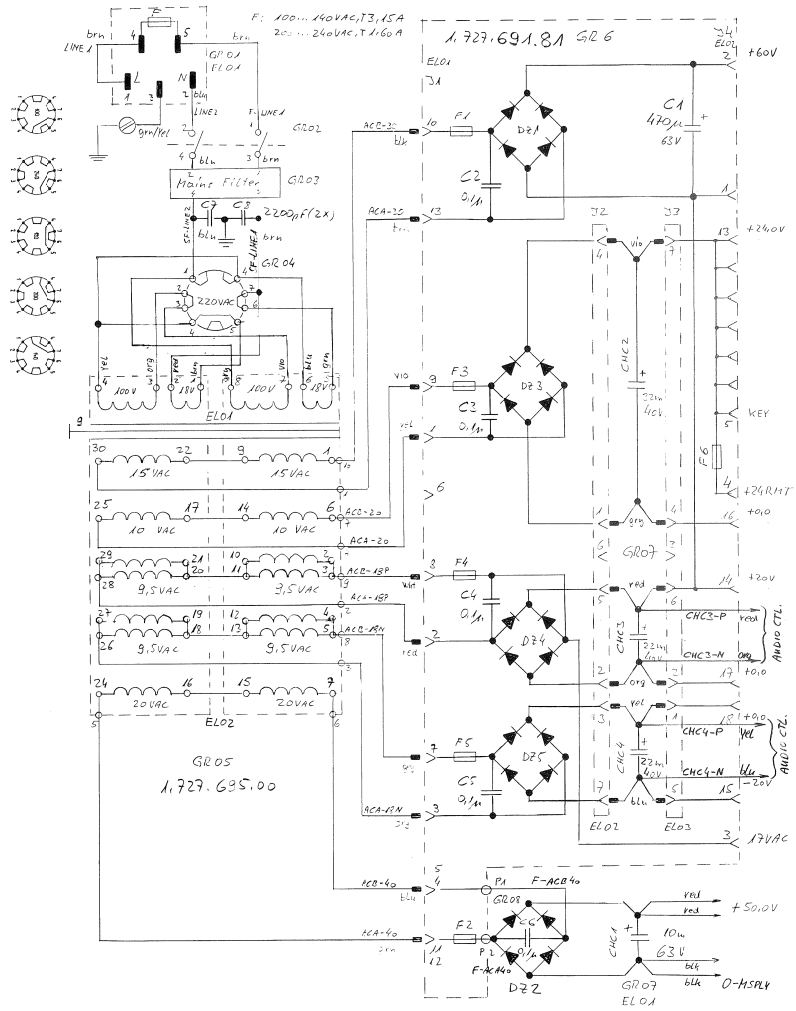

D 29.4.91 Wlh.				
	A 807 GR 2/3/4/5/6/7/8			PAGE 1 OF 1
STUDER	POWER SUPPLY			1.727.692.81

POWER SUPPLY 1.727.692.81 (4CH)

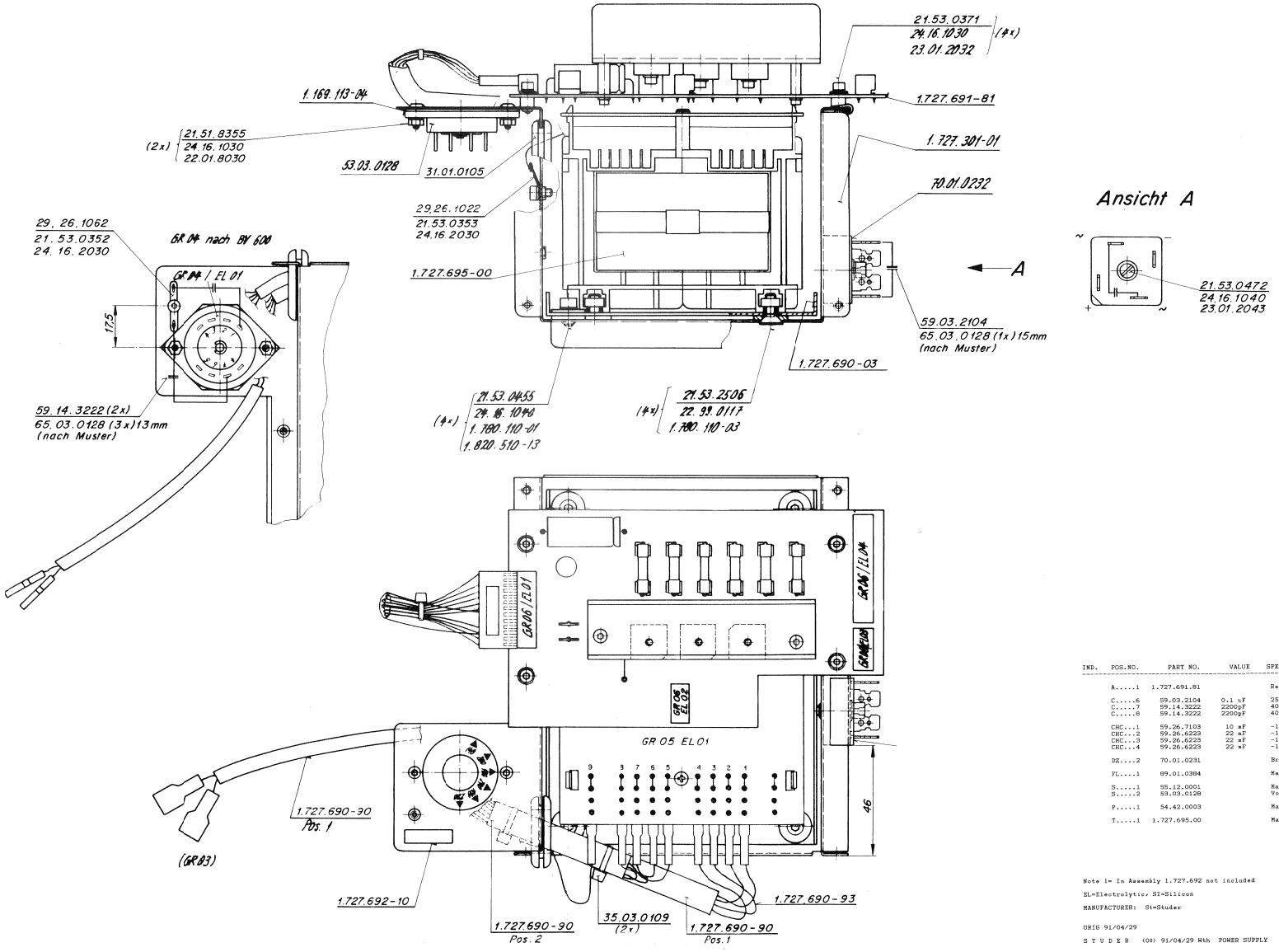

IND.	POS.NO.	PART NO.	VALUE	SPECIFICATIONS / EQUIVALENT		MANUF.
	A.....1	1.727.691.81		Rectifier board	GR06	St
	C.....6	59.03.2104	0.1 uF	250 V PETP	GR06	
	C.....7	59.14.3222	2200pF	400 V, Noise suppr. C, Y	GR04	
	C.....8	59.14.3222	2200pF	400 V, Noise suppr. C, Y	GR04	
	CHC...1	59.26.7103	10 mF	-10% 63 V EL	GR07, Note 1	
	CHC...2	59.26.6223	22 mF	-10% 40 V EL	GR07, Note 1	
	CHC...3	59.26.6223	22 mF	-10% 40 V EL	GR07, Note 1	
	CHC...4	59.26.6223	22 mF	-10% 40 V EL	GR07, Note 1	
	DZ....2	70.01.0231		Bridge Rect. 100V, 35A	GR08	
	FL....1	89.01.0384		Mains filter, IEC 65 cl.2,	GR03, Note 1	
	S.....1	55.12.0001		Mains switch	GR02, Note 1	
	S.....2	53.03.0128		Voltage selector	GR04	
	F.....1	54.42.0003		Mains connector	GR01, Note 1	
	T.....1	1.727.695.00		Mains transformer	GR05	St

Note 1= In Assembly 1.727.692 not included

EL=Electrolytic, SI=Silicon

MANUFACTURER: St=Studer

ORIG 91/04/29

STUDER (00) 91/04/29 Wth POWER SUPPLY PL 1.727.692.81 PAGE 1

RECTIFIER BOARD 1.727.691.81 (4CH)

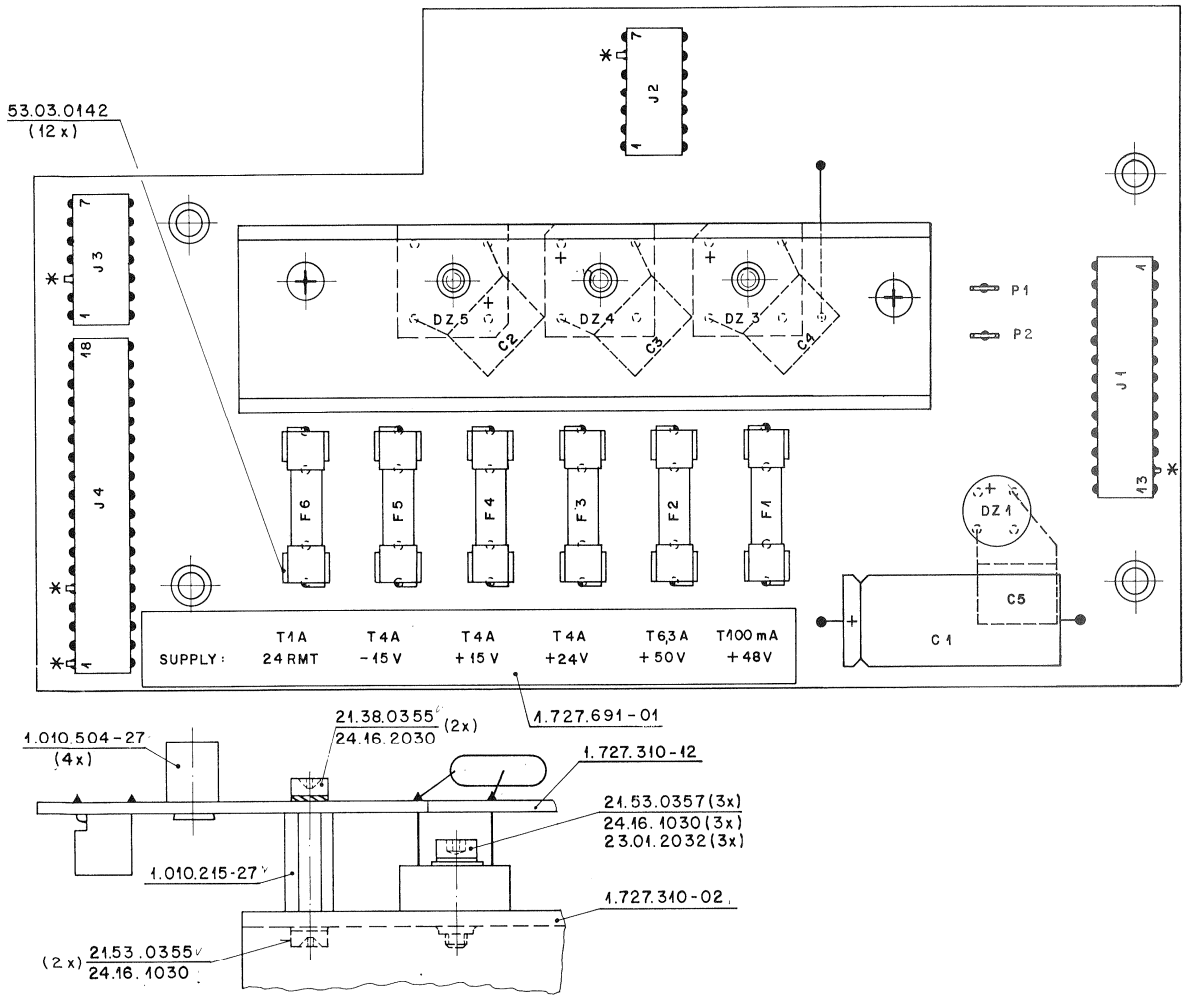

IND.	POS.NO.	PART NO.	VALUE	SPECIFICATIONS / EQUIVALENT	MANUF.
	C.....1	59.25.6471	470 uF	-20% 63 V EL	
	C.....2	59.03.2104	0.1 uF	10% 250 V PETP	
	C.....3	59.03.2104	0.1 uF	10% 250 V PETP	
	C.....4	59.03.2104	0.1 uF	10% 250 V PETP	
	C.....5	59.03.2104	0.1 uF	10% 250 V PETP	
	DZ....1	70.01.0223		Bridge Rect. 250V,0.8A SI	
	DZ....2			not used	
	DZ....3	70.01.0227		Bridge Rect. 280V, 6 A SI	
	DZ....4	70.01.0227		Bridge Rect. 280V, 6 A SI	
	DZ....5	70.01.0227		Bridge Rect. 280V, 6 A SI	
	F.....1	51.01.0107	T 100mA	Fuse, 5 * 20	
	F.....2	51.01.0125	T 6.3 A	Fuse, 5 * 20	
	F.....3	51.01.0123	T 4 A	Fuse, 5 * 20	
	F.....4	51.01.0123	T 4 A	Fuse, 5 * 20	
	F.....5	51.01.0123	T 4 A	Fuse, 5 * 20	
	F.....6	51.01.0117	T 1 A	Fuse, 5 * 20	
	J.....1	54.01.0309	13 Pol	CIS Socket Strip	AMP
	J.....2	54.01.0244	7 Pol	CIS Socket Strip	AMP
	J.....3	54.01.0244	7 Pol	CIS Socket Strip	AMP
	J.....4	54.01.0247	18 Pol	CIS Socket Strip	AMP
	MP....1	1.727.310.12	1 pce	Rectifier PCB	St
	MP....2	53.03.0142	12 pcs	Fuse holder	
	MP....3	1.727.691.02	4 pcs	Rivet tube	St
	MP....4	1.727.310.02	1 pce	Heat Sink	St
	MP....5	1.010.215.27	1 pce	Nut bolt	St
	MP....6	21.38.0355	2 pcs	Screw M3 * 8	
	MP....7	24.16.2030	2 pcs	Flat wacher	
	MP....8	21.53.0357	3 pcs	Screw M3 * 12	
	MP....9	23.01.2032	3 pcs	Flat wacher	
	MP...10	24.16.1030	4 pcs	Lock wacher	
	MP...11	1.727.691.01	1 pce	Shield	St
	MP...12	1.727.691.10	1 pce	No. label	St
	MP...13	50.20.1003	1 pce	Transistor support	

IND.	POS.NO.	PART NO.	VALUE	SPECIFICATIONS / EQUIVALENT	MANUF.
	MP...14	21.53.0355	2 pcs	Screw M3 * 8	
	P.....1	54.02.0320	2.8*0.8	Flat Pin	AMP
	P.....2	54.02.0320	2.8*0.8	Flat Pin	AMP

EL=Electrolytic, SI=Silicon

MANUFACTURER: AMP=AMP, St=Studer

ORIG 91/04/29

TAPE DECK ELECTRONICS 1.727.650.26
-STABILIZER SECTION

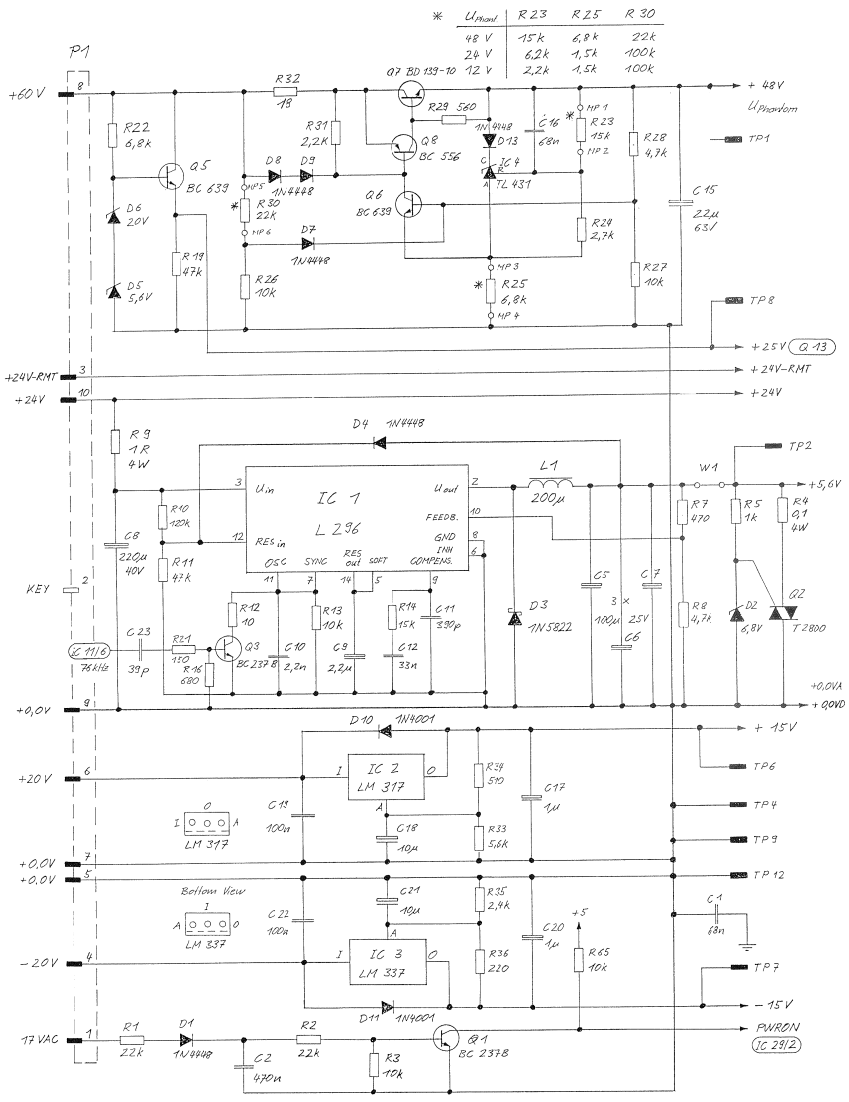

TAPE DECK ELECTRONICS 1.727.650.26

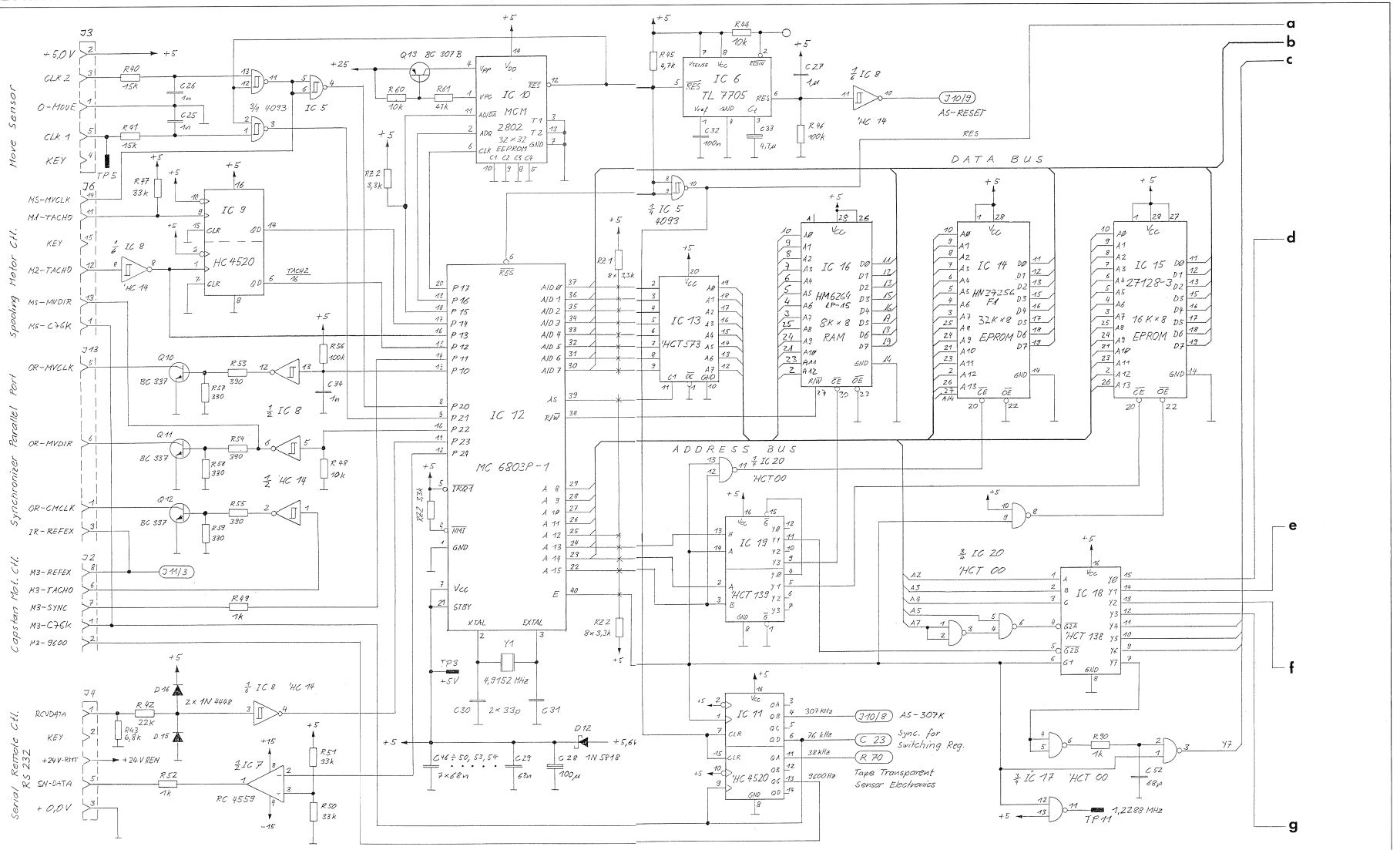

0 20.3.90 WH.	1 . .	2 . .	3 . .	. .	
	A 807 GR 10			PAGE 2 OF 5	
STUDER	Tape Deck Electronics			SC	1.727.650.26

0 20.3.90 WH.	1 . .	2 . .	3 . .	. .	
	A 807 GR 10			PAGE 3 OF 5	
STUDER	Tape Deck Electronics			SC	1.727.650.26

TAPE DECK ELECTRONICS 1.727.650.26

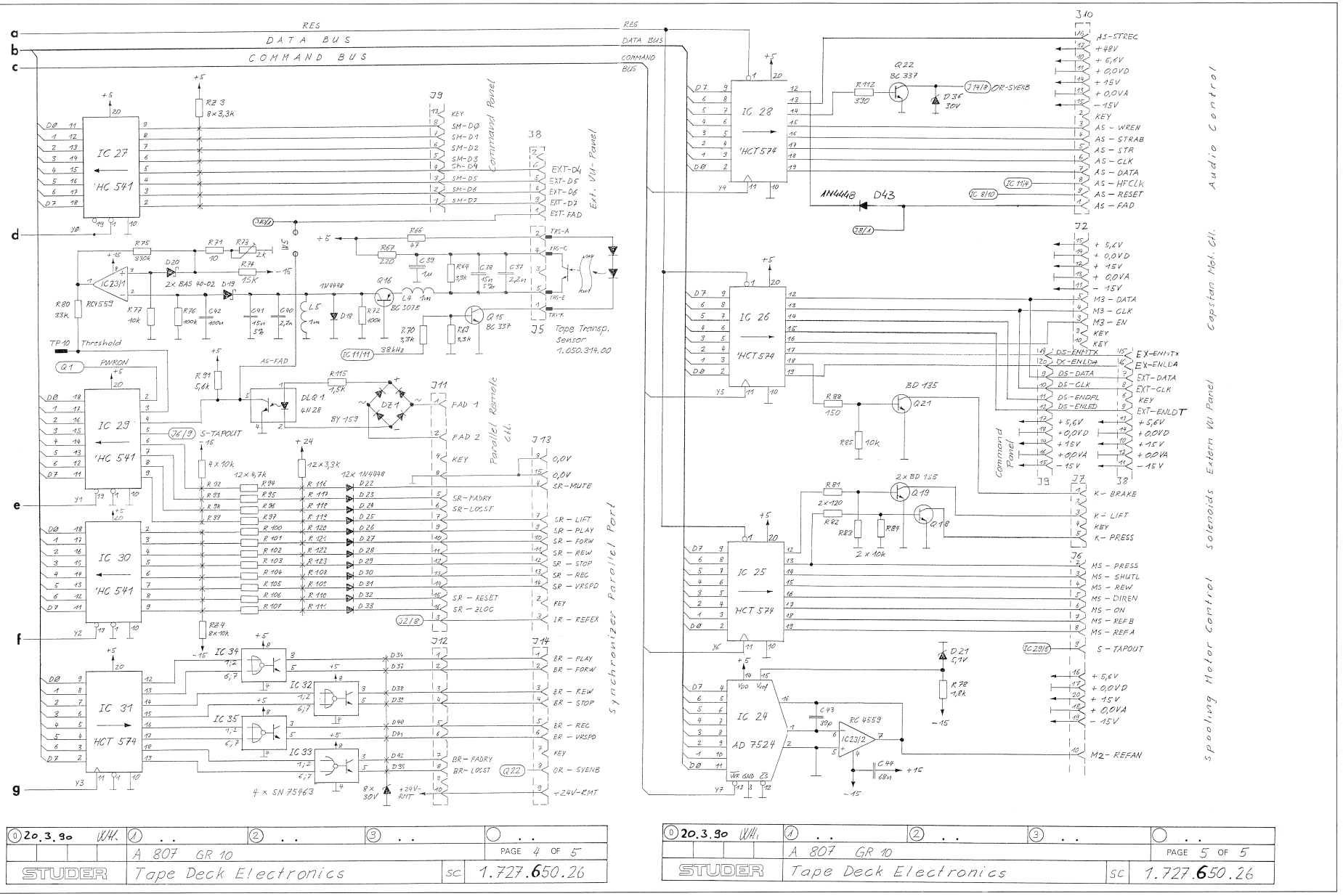

0 20.3.90 WH.	1 . .	2 . .	3 . .	. .	
	A 807 GR 10			PAGE 4 OF 5	
STUDER	Tape Deck Electronics			SC	1.727.650.26

0 20.3.90 WH.	1 . .	2 . .	3 . .	. .	
	A 807 GR 10			PAGE 5 OF 5	
STUDER	Tape Deck Electronics			SC	1.727.650.26

TAPE DECK ELECTRONICS 1.727.650.26

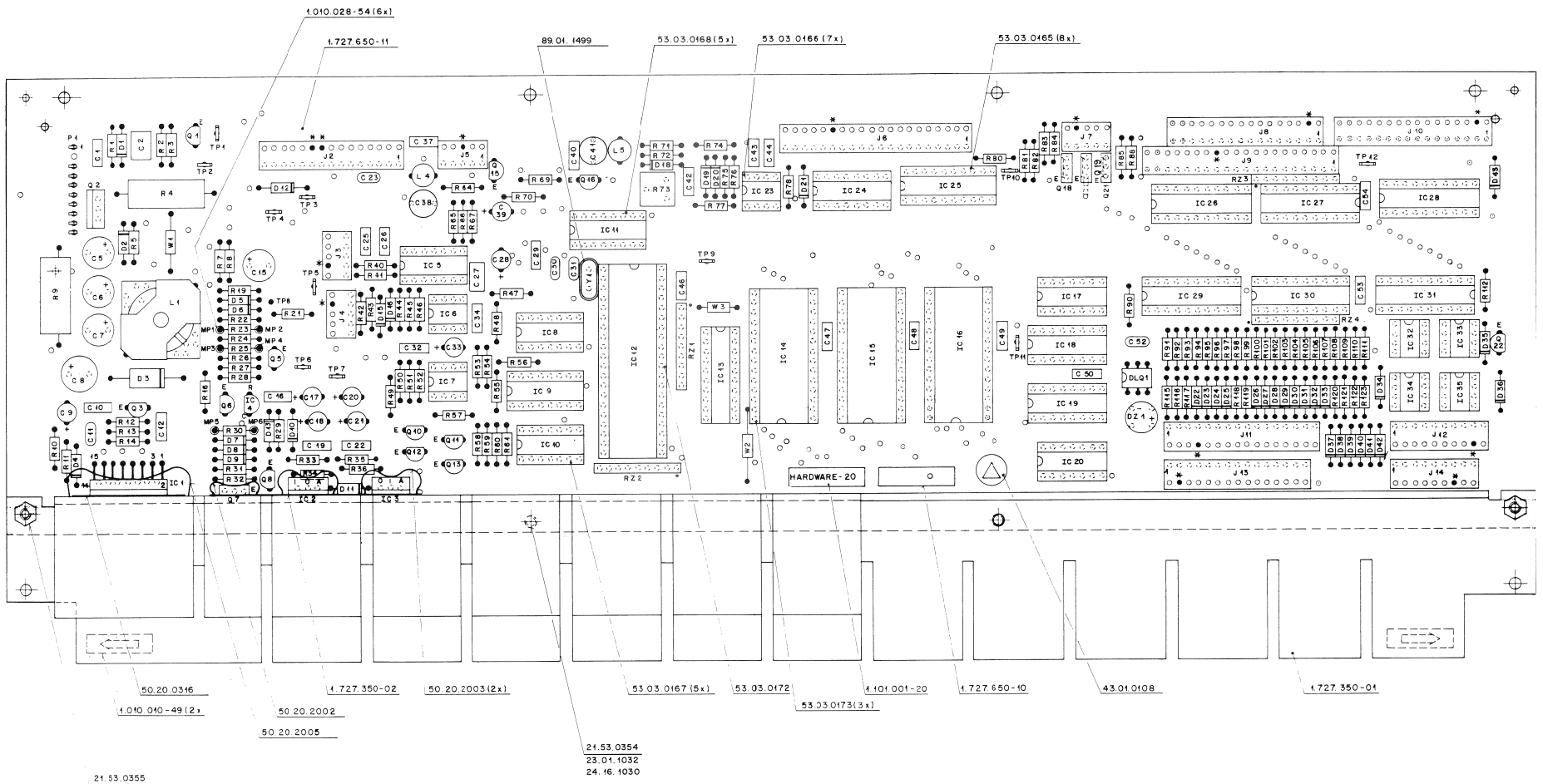

R73 = TAPE TRANSPARENT SENSOR ADJUSTMENT

TP1 +48.0 V PHANTOM POWERING (+12.0 V)
TP2 +5.0 V
TP3 +5.0 V
TP4 0.0 V
TP5 MOVE SENSOR CLOCK
TP6 +15.0 V
TP7 -15.0 V
TP8 +25.0 V
TP9 0.0 V
TP10 TAPE TRANSPARENT SENSOR (H=TRANS. / L=TAPE)
TP11 PROCESSOR CLOCK (f=1.2286 MHz)
TP12 0.0 V

TAPE DECK ELECTRONICS 1.727.650.26

Ad	..POS..	...REF.No...	DESCRIPTION	MANUFACTURER
	C.....1	59.05.0683	68 nF 10% 63 V PETP	
	C.....2	59.05.0474	470 nF 10% 63 V PETP	
	C.....5	59.22.5101	100 uF -20% 25 V EL	
	C.....6	59.22.5101	100 uF -20% 25 V EL	
	C.....7	59.22.5101	100 uF -20% 25 V EL	
	C.....8	59.22.6221	220 uF -20% 40 V EL	
	C.....9	59.22.8229	2.2 uF -20% 50 V EL	
	C....10	59.05.0222	2.2 nF 10% 63 V PETP	
	C....11	59.34.5391	390 pF 5% 63 V CER	
	C....12	59.05.0333	33 nF 10% 63 V PETP	
	C....15	59.22.8220	22 uF -20% 63 V EL	
	C....16	59.05.0683	68 nF 10% 63 V PETP	
	C....17	59.22.8109	1 uF -20% 50 V EL	
	C....18	59.22.6100	10 uF -20% 35 V EL	
	C....19	59.05.0104	100 nF 10% 63 V PETP	
	C....20	59.22.8109	1 uF -20% 50 V EL	
	C....21	59.22.6100	10 uF -20% 35 V EL	
	C....22	59.05.0104	100 nF 10% 63 V PETP	
	C....23	59.34.2390	39 pF 10% 63 V CER	
	C....25	59.05.0102	1 nF 10% 63 V PETP	
	C....26	59.05.0102	1 nF 10% 63 V PETP	
	C....27	59.05.0105	1 uF 10% 63 V PETP	
	C....28	59.22.3101	100 uF -20% 10 V EL	
	C....29	59.05.0683	68 nF 10% 63 V PETP	
	C....30	59.34.2330	33 pF 10% 63 V CER	
	C....31	59.34.2330	33 pF 10% 63 V CER	
	C....32	59.05.0104	100 nF 10% 63 V PETP	
	C....33	59.22.8479	4.7 uF -20% 63 V EL	
	C....34	59.05.0102	1 nF 10% 63 V PETP	
	C....37	59.05.0222	2.2 nF 10% 63 V PETP	
	C....38	59.05.2153	15 nF 2.5% 63 V PP	
	C....39	59.22.8109	1 uF -20% 50 V EL	
	C....40	59.05.0222	2.2 nF 10% 63 V PETP	
	C....41	59.05.2153	15 nF 2.5% 63 V PP	
	C....42	59.05.0104	100 nF 10% 63 V PETP	
	C....43	59.34.2390	39 pF 10% 63 V CER	
	C....44	59.06.0683	68 nF 10% 63 V PETP	
	C....46	59.06.0683	68 nF 10% 63 V PETP	
	C....47	59.06.0683	68 nF 10% 63 V PETP	
	C....48	59.06.0683	68 nF 10% 63 V PETP	
	C....49	59.06.0683	68 nF 10% 63 V PETP	
	C....50	59.06.0683	68 nF 10% 63 V PETP	
	C....52	59.34.4680	68 pF 10% 63 V CER	
	C....53	59.06.0683	68 nF 10% 63 V PETP	
	C....54	59.06.0683	68 nF 10% 63 V PETP	
	D.....1	50.04.0125	1N4448 50 V	
	D.....2	50.04.1102	6.8 V 5% 0.4 W	
	D.....3	50.04.0519	1N5822 MBR 340 P 40 V, 3 A Schottky	Mot,GI
	D.....4	50.04.0125	1N4448 50 V	
	D.....5	50.04.1108	5.6 V 5% 0.4 W	
	D.....6	50.04.1109	20 V 5% 0.4 W	
	D.....7	50.04.0125	1N4448 50 V	
	D.....8	50.04.0125	1N4448 50 V	
	D.....9	50.04.0125	1N4448 50 V	
	D....10	50.04.0122	1N4001 ...1N4004 50 V	
	D....11	50.04.0122	1N4001 ...1N4004 50 V	
	D....12	50.04.0512	1N5818 1N5819 30 V Schottky	
	D....13	50.04.0125	1N4448 50 V	
	D....15	50.04.0125	1N4448 50 V	
	D....16	50.04.0125	1N4448 50 V	
	D....18	50.04.0125	1N4448 50 V	
	D....19	50.04.0127	BAS 40-02 BAT 85 BAT 42 30 V Schottky	Sie,Ph
	D....20	50.04.0127	BAS 40-02 BAT 85 BAT 42 30 V Schottky	Sie,Ph
	D....21	50.04.1112	5.1 V 5% 0.4 W	
	D....22	50.04.0125	1N4448 50 V	
	D....23	50.04.0125	1N4448 50 V	
	D....24	50.04.0125	1N4448 50 V	
	D....25	50.04.0125	1N4448 50 V	
	D....26	50.04.0125	1N4448 50 V	
	D....27	50.04.0125	1N4448 50 V	
	D....28	50.04.0125	1N4448 50 V	
	D....29	50.04.0125	1N4448 50 V	
	D....30	50.04.0125	1N4448 50 V	
	D....31	50.04.0125	1N4448 50 V	
	D....32	50.04.0125	1N4448 50 V	
	D....33	50.04.0125	1N4448 50 V	
	D....34	50.04.1125	30 V 5% 0.4 W	
	D....35	50.04.1125	30 V 5% 0.4 W	
	D....36	50.04.1125	30 V 5% 0.4 W	
	D....37	50.04.1125	30 V 5% 0.4 W	
	D....38	50.04.1125	30 V 5% 0.4 W	
	D....39	50.04.1125	30 V 5% 0.4 W	
	D....40	50.04.1125	30 V 5% 0.4 W	
	D....41	50.04.1125	30 V 5% 0.4 W	
	D....42	50.04.1125	30 V 5% 0.4 W	
	D....43	50.04.0125	1N4448 50 V	
	DLQ...1	50.95.0126	4 N 28 4 N 26	
	DZ....1	70.01.0222	BY159 B 35 C800	
	IC....1	50.10.0110	L 296 Switching Regulator	SGS
	IC....2	50.10.0104	LM 317	
	IC....3	50.10.0105	LM 337	
	IC....4	50.10.0106	TL 431	
	IC....5	50.01.0008	4093	
	IC....6	50.11.0122	TL 7705	TI

Ad	..POS..	...REF.No...	DESCRIPTION	MANUFACTURER
	IC....7	50.09.0107	RC 4559 uPC 4559	
	IC....8	50.17.1014	74 HC 14	
	IC....9	50.17.4520	74 HC 4520	
	IC...10	50.14.0126	MCM2802P NMOS EEPROM 32*32	Mot
	IC...11	50.17.4520	74 HC 4520	
	IC...12	50.16.0107	MC6803P-1 HD6803P-1 1,25MHz NMOS-uProcessor	Mot,Hi
	IC...13	50.17.0573	74 HCT573	
	IC...14	50.14.2004	HN27C256G CMOS EPROM, SW A807 20/92 1.727.651.26	St
	IC...15	- . -	not used	
	IC...16	50.14.0133	HM6264LP-1 5CHMOS RAM 8K*8	
	IC...17	50.17.0000	74 HCT 00	
	IC...18	50.17.0138	74 HCT138	
	IC...19	50.17.0139	74 HCT139	
	IC...20	50.17.0000	74 HCT 00	
	IC...23	50.09.0107	RC 4559 uPC 4559	
	IC...24	50.07.0002	AD 7524JN 8 Bit D/A Converter	ADI
	IC...25	50.17.0574	74 HCT574	
	IC...26	50.17.0574	74 HCT574	
	IC...27	50.17.1541	74 HC 541	
	IC...28	50.17.0574	74 HCT574	
	IC...29	50.17.1541	74 HC 541	
	IC...30	50.17.1541	74 HC 541	
	IC...31	50.17.0574	74 HCT574	
	IC...32	50.05.0203	SN 75463P	TI
	IC...33	50.05.0203	SN 75463P	TI
	IC...34	50.05.0203	SN 75463P	TI
	IC...35	50.05.0203	SN 75463P	TI
	J.....2	54.01.0219	15 Pole CIS Socket Strip	AMP
	J.....3	54.01.0288	5 Pole CIS Socket Strip	AMP
	J.....4	54.01.0288	5 Pole CIS Socket Strip	AMP
	J.....5	54.01.0288	5 Pole CIS Socket Strip	AMP
	J.....6	54.01.0226	20 Pole CIS Socket Strip	AMP
	J.....7	54.01.0288	5 Pole CIS Socket Strip	AMP
	J.....8	54.01.0294	16 Pole CIS Socket Strip	AMP
	J.....9	54.01.0226	20 Pole CIS Socket Strip	AMP
	J....10	54.01.0294	16 Pole CIS Socket Strip	AMP
	J....11	54.01.0294	16 Pole CIS Socket Strip	AMP
	J....12	54.01.0290	10 Pole CIS Socket Strip	AMP
	J....13	54.01.0219	15 Pole CIS Socket Strip	AMP
	J....14	54.01.0217	9 Pole CIS Socket Strip	AMP
	L.....1	1.022.251.00	200uH Filter Coil	St
	L.....4	62.02.3102	1mH RF Choke 10%	
	L.....5	62.02.3102	1mH RF Choke 10%	
	MP....1	1.010.028.54	1 Pole Wrap Pin	
	MP....2	1.010.028.54	1 Pole Wrap Pin	
	MP....3	1.010.028.54	1 Pole Wrap Pin	
	MP....4	1.010.028.54	1 Pole Wrap Pin	
	MP....5	1.010.028.54	1 Pole Wrap Pin	
	MP....6	1.010.028.54	1 Pole Wrap Pin	
	MP....7	1.727.650.11	1 pce PC Board	St
	MP....8	1.727.350.01	1 pce Heatsink	St
	MP....9	- . -	not used	
	MP...10	1.727.350.02	1 pce Thermofilm	St
	MP...11	50.20.0316	1 pce Thermoplastic for SOT 93	
	MP...12	50.20.2002	1 pce Mounting clip TO 126	
	MP...13	50.20.2003	2 pcs Mounting clip TO 220	
	MP...14	50.20.2005	1 pce Mounting clip SOT 93	
	MP...15	- . -	not used	
	MP...16	- . -	not used	
	MP...17	- . -	not used	
	MP...18	21.53.0354	2 pcs M3 * 6 Hexagon socket head cap screw	
	MP...19	21.53.0355	2 pcs M3 * 8 Hexagon socket head cap screw	
	MP...20	23.01.1032	4 pcs Washer D3.2/6.0	
	MP...21	24.16.1030	2 pcs Fin washer D3.2/5.5	
	MP...22	1.727.650.10	1 pce No. label	St
	MP...23	1.101.001.20	1 pce Text label	St
	MP...24	43.01.0108	1 pce ESE warning label	
	MP...25	- . -	not used	
	MP...26	- . -	not used	
	MP...27	22.01.8030	2 pcs Hexagon nut	
	P.....1	54.01.0320	10 Pole CIS Pin Strip	
	Q.....1	50.03.0436	BC 237 B BC547B, BC550B NPN	
	Q.....2	50.99.0106	T 2800 BT 138-500, 400V, 8A, TRIAC	RCA,Ph
	Q.....3	50.03.0436	BC 237 B BC547B, BC550B NPN	
	Q.....5	50.03.0551	BC 639 NPN	Mot,Ph
	Q.....6	50.03.0551	BC 639 NPN	Mot,Ph
	Q.....7	50.03.0451	BC 139-10 NPN	
	Q.....8	50.03.0492	BC 556 B PNP	
	Q....10	50.03.0340	BC 337-25 NPN	
	Q....11	50.03.0340	BC 337-25 NPN	
	Q....12	50.03.0340	BC 337-25 NPN	
	Q....13	50.03.0515	BC 307 B BC557B, BC560B PNP	
	Q....15	50.03.0340	BC 337-25 NPN	
	Q....16	50.03.0515	BC 307 B BC557B, BC560B PNP	
	Q....18	50.03.0478	BC 135-10 NPN	
	Q....19	50.03.0478	BC 135-10 NPN	
	Q....21	50.03.0478	BC 135-10 NPN	
	Q....22	50.03.0340	BC 337-25 NPN	
	R.....1	57.11.3223	22 kOhm 1%, 0.25W, MF	
	R.....2	57.11.3223	22 kOhm 1%, 0.25W, MF	
	R.....3	57.11.3103	10 kOhm 1%, 0.25W, MF	
	R.....4	57.56.5108	0.1 Ohm 10%, 4.0 W, Wire	
	R.....5	57.11.3102	1 kOhm 1%, 0.25W, MF	

Ad	..POS..	...REF.No...	DESCRIPTION	MANUFACTURER
	R.....7	57.11.3471	470 Ohm 1%, 0.25W, MF	
	R.....8	57.11.3472	4.7 kOhm 1%, 0.25W, MF	
	R.....9	57.56.5109	1 Ohm 10%, 4.0 W, Wire	
	R....10	57.11.3124	120 kOhm 1%, 0.25W, MF	
	R....11	57.11.3473	47 kOhm 1%, 0.25W, MF	
	R....12	57.11.3100	10 Ohm 1%, 0.25W, MF	
	R....13	57.11.3103	10 kOhm 1%, 0.25W, MF	
	R....14	57.11.3153	15 kOhm 1%, 0.25W, MF	
	R....16	57.11.3681	680 Ohm 1%, 0.25W, MF	
	R....19	57.11.3473	47 kOhm 1%, 0.25W, MF	
	R....21	57.11.3151	150 Ohm 1%, 0.25W, MF	
	R....22	57.11.3682	6.8 kOhm 1%, 0.25W, MF	
	R....23	57.11.3153	15 kOhm 1%, 0.25W, MF note 1	
	R....24	57.11.3272	2.7 kOhm 1%, 0.25W, MF	
	R....25	57.11.3682	6.8 kOhm 1%, 0.25W, MF note 1	
	R....26	57.11.3103	10 kOhm 1%, 0.25W, MF	
	R....27	57.11.3103	10 kOhm 1%, 0.25W, MF	
	R....28	57.11.3472	4.7 kOhm 1%, 0.25W, MF	
	R....29	57.11.3561	560 Ohm 1%, 0.25W, MF	
	R....30	57.11.3223	22 kOhm 1%, 0.25W, MF note 1	
	R....31	57.11.3222	2.2 kOhm 1%, 0.25W, MF	
	R....32	57.11.3180	18 Ohm 1%, 0.25W, MF	
	R....33	57.11.3562	5.6 kOhm 1%, 0.25W, MF	
	R....34	57.11.3511	510 Ohm 1%, 0.25W, MF	
	R....35	57.11.3242	2.4 kOhm 1%, 0.25W, MF	
	R....36	57.11.3221	220 Ohm 1%, 0.25W, MF	
	R....40	57.11.3153	15 kOhm 1%, 0.25W, MF	
	R....41	57.11.3153	15 kOhm 1%, 0.25W, MF	
	R....42	57.11.3223	22 kOhm 1%, 0.25W, MF	
	R....43	57.11.3682	6.8 kOhm 1%, 0.25W, MF	
	R....44	57.11.3103	10 kOhm 1%, 0.25W, MF	
	R....45	57.11.3472	4.7 kOhm 1%, 0.25W, MF	
	R....46	57.11.3104	100 kOhm 1%, 0.25W, MF	
	R....47	57.11.3333	33 kOhm 1%, 0.25W, MF	
	R....48	57.11.3103	10 kOhm 1%, 0.25W, MF	
	R....49	57.11.3102	1 kOhm 1%, 0.25W, MF	
	R....50	57.11.3333	33 kOhm 1%, 0.25W, MF	
	R....51	57.11.3333	33 kOhm 1%, 0.25W, MF	
	R....52	57.11.3102	1 kOhm 1%, 0.25W, MF	
	R....53	57.11.3391	390 Ohm 1%, 0.25W, MF	
	R....54	57.11.3391	390 Ohm 1%, 0.25W, MF	
	R....55	57.11.3391	390 Ohm 1%, 0.25W, MF	
	R....56	57.11.3104	100 kOhm 1%, 0.25W, MF	
	R....57	57.11.3331	330 Ohm 1%, 0.25W, MF	
	R....58	57.11.3331	330 Ohm 1%, 0.25W, MF	
	R....59	57.11.3331	330 Ohm 1%, 0.25W, MF	
	R....60	57.11.3103	10 kOhm 1%, 0.25W, MF	
	R....61	57.11.3473	47 kOhm 1%, 0.25W, MF	
	R....64	57.11.3392	3.9 kOhm 1%, 0.25W, MF	
	R....65	57.11.3103	10 kOhm 1%, 0.25W, MF	
	R....66	57.11.3470	47 Ohm 1%, 0.25W, MF	
	R....67	57.11.3221	220 Ohm 1%, 0.25W, MF	
	R....69	57.11.3332	3.3 kOhm 1%, 0.25W, MF	
	R....70	57.11.3332	3.3 kOhm 1%, 0.25W, MF	
	R....71	57.11.3100	10 Ohm 1%, 0.25W, MF	
	R....72	57.11.3104	100 kOhm 1%, 0.25W, MF	
	R....73	58.01.8202	2 kOhm 10%, 0.5 W, Cermet, Trimmer	
	R....74	57.11.3153	15 kOhm 1%, 0.25W, MF	
	R....75	57.11.3334	330 kOhm 1%, 0.25W, MF	
	R....76	57.11.3104	100 kOhm 1%, 0.25W, MF	
	R....77	57.11.3103	10 kOhm 1%, 0.25W, MF	
	R....78	57.11.3182	1.8 kOhm 1%, 0.25W, MF	
	R....80	57.11.3333	33 kOhm 1%, 0.25W, MF	
	R....81	57.11.3121	120 Ohm 1%, 0.25W, MF	
	R....82	57.11.3121	120 Ohm 1%, 0.25W, MF	
	R....83	57.11.3103	10 kOhm 1%, 0.25W, MF	
	R....84	57.11.3103	10 kOhm 1%, 0.25W, MF	
	R....85	57.11.3103	10 kOhm 1%, 0.25W, MF	
	R....88	57.11.3151	150 Ohm 1%, 0.25W, MF	
	R....90	57.11.3102	1 kOhm 1%, 0.25W, MF	
	R....91	57.11.3562	5.6 kOhm 1%, 0.25W, MF	
	R....92	57.11.3103	10 kOhm 1%, 0.25W, MF	
	R....93	57.11.3103	10 kOhm 1%, 0.25W, MF	
	R....94	57.11.3472	4.7 kOhm 1%, 0.25W, MF	
	R....95	57.11.3472	4.7 kOhm 1%, 0.25W, MF	
	R....96	57.11.3472	4.7 kOhm 1%, 0.25W, MF	
	R....97	57.11.3472	4.7 kOhm 1%, 0.25W, MF	
	R....98	57.11.3103	10 kOhm 1%, 0.25W, MF	
	R....99	57.11.3103	10 kOhm 1%, 0.25W, MF	
	R...100	57.11.3472	4.7 kOhm 1%, 0.25W, MF	
	R...101	57.11.3472	4.7 kOhm 1%, 0.25W, MF	
	R...102	57.11.3472	4.7 kOhm 1%, 0.25W, MF	
	R...103	57.11.3472	4.7 kOhm 1%, 0.25W, MF	
	R...104	57.11.3472	4.7 kOhm 1%, 0.25W, MF	
	R...105	57.11.3472	4.7 kOhm 1%, 0.25W, MF	
	R...106	57.11.3472	4.7 kOhm 1%, 0.25W, MF	
	R...107	57.11.3472	4.7 kOhm 1%, 0.25W, MF	
	R...108	57.11.3332	3.3 kOhm 1%, 0.25W, MF	
	R...109	57.11.3332	3.3 kOhm 1%, 0.25W, MF	
	R...110	57.11.3332	3.3 kOhm 1%, 0.25W, MF	
	R...111	57.11.3332	3.3 kOhm 1%, 0.25W, MF	
	R...112	57.11.3391	390 Ohm 1%, 0.25W, MF	
	R...115	57.11.3152	1.5 kOhm 1%, 0.25W, MF	
	R...116	57.11.3332	3.3 kOhm 1%, 0.25W, MF	
	R...117	57.11.3332	3.3 kOhm 1%, 0.25W, MF	
	R...118	57.11.3332	3.3 kOhm 1%, 0.25W, MF	

Ad	..POS..	...REF.No...	DESCRIPTION	MANUFACTURER
	R...119	57.11.3332	3.3 kOhm 1%, 0.25W, MF	
	R...120	57.11.3332	3.3 kOhm 1%, 0.25W, MF	
	R...121	57.11.3332	3.3 kOhm 1%, 0.25W, MF	
	R...122	57.11.3332	3.3 kOhm 1%, 0.25W, MF	
	R...123	57.11.3332	3.3 kOhm 1%, 0.25W, MF	
	RZ....1	57.88.4332	8*3.3kOhm 5%, Single Line	
	RZ....2	57.88.4332	8*3.3kOhm 5%, Single Line	
	RZ....3	57.88.4332	8*3.3kOhm 5%, Single Line	
	RZ....4	57.88.4103	8* 10kOhm 5%, Single Line	
	TP....1	54.02.0320	1 Pole Tab	
	TP....2	54.02.0320	1 Pole Tab	
	TP....3	54.02.0320	1 Pole Tab	
	TP....4	54.02.0320	1 Pole Tab	
	TP....5	54.02.0320	1 Pole Tab	
	TP....6	54.02.0320	1 Pole Tab	
	TP....7	54.02.0320	1 Pole Tab	
	TP....8	00.00.0000	not used	
	TP....9	54.02.0320	1 Pole Tab	
	TP...10	54.02.0320	1 Pole Tab	
	TP...11	54.02.0320	1 Pole Tab	
	TP...12	54.02.0320	1 Pole Tab	
	W.....1	57.11.3000	Wire bridge	
	W.....2	57.11.3000	Wire bridge	
	W.....3	57.11.3000	Wire bridge	
	XIC...5	53.03.0167	14 Pole IC Socket	
	XIC...6	53.03.0166	8 Pole IC Socket	
	XIC...7	53.03.0166	8 Pole IC Socket	
	XIC...8	53.03.0167	14 Pole IC Socket	
	XIC...9	53.03.0168	16 Pole IC Socket	
	XIC..10	53.03.0167	14 Pole IC-Socket	
	XIC..11	53.03.0168	16 Pole IC Socket	
	XIC..12	53.03.0172	40 Pole IC-Socket	
	XIC..13	53.03.0165	20 Pole IC Socket	
	XIC..14	53.03.0173	28 Pole IC-Socket	
	XIC..15	53.03.0173	28 Pole IC-Socket	
	XIC..16	53.03.0173	28 Pole IC Socket	
	XIC..17	53.03.0167	14 Pole IC Socket	
	XIC..18	53.03.0168	16 Pole IC Socket	
	XIC..19	53.03.0168	16 Pole IC Socket	
	XIC..20	53.03.0167	14 Pole IC Socket	
	XIC..23	53.03.0166	8 Pole IC Socket	
	XIC..24	53.03.0168	16 Pole IC Socket	
	XIC..25	53.03.0165	20 Pole IC Socket	
	XIC..26	53.03.0165	20 Pole IC Socket	
	XIC..27	53.03.0165	20 Pole IC Socket	
	XIC..28	53.03.0165	20 Pole IC Socket	
	XIC..29	53.03.0165	20 Pole IC Socket	
	XIC..30	53.03.0165	20 Pole IC Socket	
	XIC..31	53.03.0165	20 Pole IC Socket	
	XIC..32	53.03.0166	8 Pole IC Socket	
	XIC..33	53.03.0166	8 Pole IC Socket	
	XIC..34	53.03.0166	8 Pole IC Socket	
	XIC..35	53.03.0166	8 Pole IC Socket	
	Y.....1	89.01.0560	4.9152MHz +-20 ppm, HC 49 U, Quartz	ITT

(24.05.89) SW A807 21/89, Software correction
(28.06.89) SW A807 MP 26/89, SW Extension for 2CH PBO Broadcast
(08.02.90) SW A807 MP 06/90, SW Extension for Audio Remote, TC, Synchronizer
(12.04.90) SW A807 MP 15/90, Several SW Extensions
(13.05.91) SW A807 MP 20/91, Several SW Extensions
(11.05.92) SW A807 MP 20/92, Several SW Extensions

Note 1 Variable Phantom Supply

U (V)	R 23 (Ohm)	R 25 (Ohm)	R 30 (Ohm)
48	15 k	6.8 k	22 k
24	6.2 k	1.5 k	100 k
12	2.2 k	1.5 k	100 k

EL = Electrolytic, PETP = Polyesterfoil, PP = Polypropylene
MF = Metal Film, CER = Ceramic

MANUFACTURER: ADI = Analog Devices Inc. Ra = Raytheon
AMP = AMP Incorporated RCA = Radio Corp. of Am.
GI = General Instruments SGS = SGS/Ates
Hi = Hitachi Sie = Siemens
ITT = Intermetall St = Studer
Mot = Motorola TI = Texas Instruments
Ph = Philips

1.727.650.26 TAPE DECK ELECTRONICS Wth92/05/1100

END

AUDIO REMOTE INTERFACE 1.727.652.81

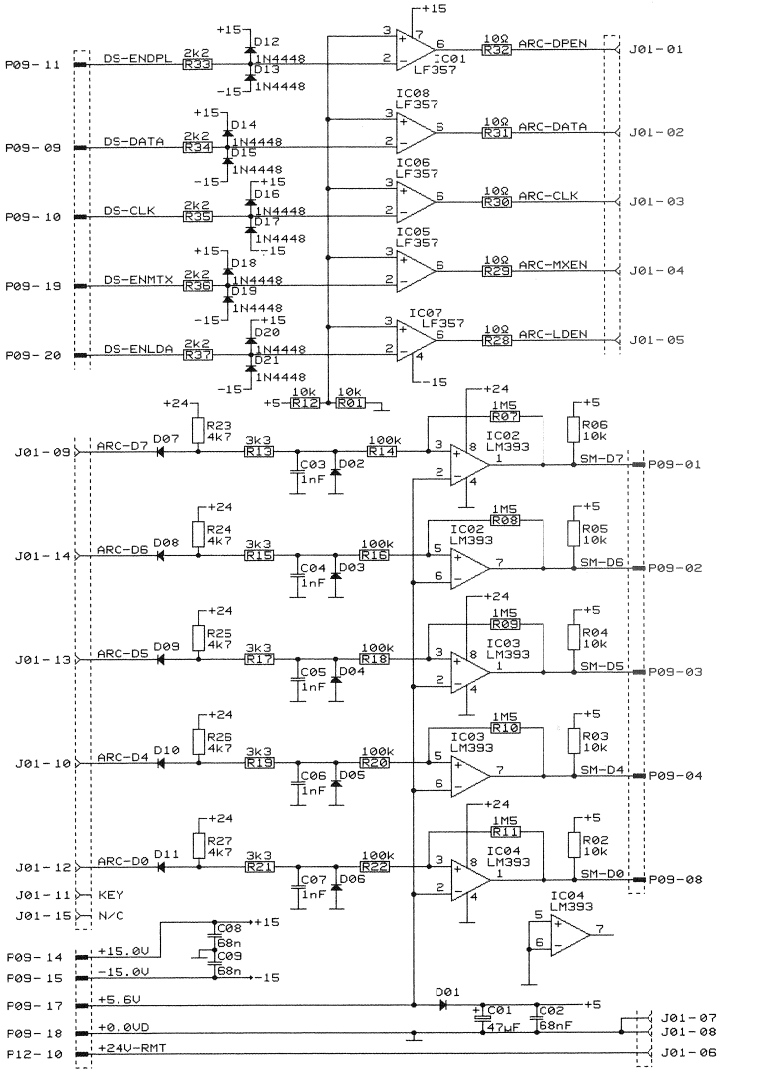

05.11.90 DS			
	A807-2 / A807-4 GRP 51		PAGE 1 OF 1
STUDER	AUDIO REMOTE INTERFACE	SCH	1.727.652-81

AUDIO REMOTE INTERFACE 1.727.652.81

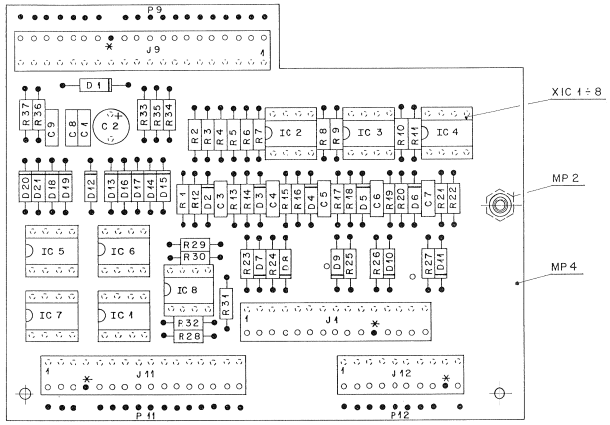

ESE-Warnschild MP1, Nr. Etikette MP3
aufgeklebt nach Fabrikationsmuster.

Codierung: Schaltdraht 64.01.0108 ⌀ 0,8 x 8mm
(muss 1mm vorstehen).

P9, P11, P12 auf Lötseite eingelötet.

Änderung	Ausgabe	Datum	Gez.	Gepr.	Ges.	Index
		18.1.91				0

Kopie für:

STUDER REGENSDORF ZÜRICH	Benennung: AUDIO REMOTE IF BOARD ESE	Nummer: 1.727.652-81

Ad	..POS..	...REF.No...	DESCRIPTION				MANUFACTURER
	C.....1	59.06.0683	68 nF	10%	63V	PETP	
	C.....2	59.22.3470	47 uF	20%	10V	ALU	
	C.....3	59.06.0102	1 nF	10%	63V	PETP	
	C.....4	59.06.0102	1 nF	10%	63V	PETP	
	C.....5	59.06.0102	1 nF	10%	63V	PETP	
	C.....6	59.06.0102	1 nF	10%	63V	PETP	
	C.....7	59.06.0102	1 nF	10%	63V	PETP	
	C.....8	59.06.0683	68 nF	10%	63V	PETP	
	C.....9	59.06.0683	68 nF	10%	63V	PETP	
	D.....1	50.04.0512	1N5818		30V	Schottky	MOT
	D.....2	50.04.0127	BAT 85		30V	Schottky	
	D.....3	50.04.0127	BAT 85		30V	Schottky	
	D.....4	50.04.0127	BAT 85		30V	Schottky	
	D.....5	50.04.0127	BAT 85		30V	Schottky	
	D.....6	50.04.0127	BAT 85		30V	Schottky	
	D.....7	50.04.0125	1N4448		50V	Si	
	D.....8	50.04.0125	1N4448		50V	Si	
	D.....9	50.04.0125	1N4448		50V	Si	
	D....10	50.04.0125	1N4448		50V	Si	
	D....11	50.04.0125	1N4448		50V	Si	
	D....12	50.04.0125	1N4448		50V	Si	
	D....13	50.04.0125	1N4448		50V	Si	
	D....14	50.04.0125	1N4448		50V	Si	
	D....15	50.04.0125	1N4448		50V	Si	
	D....16	50.04.0125	1N4448		50V	Si	
	D....17	50.04.0125	1N4448		50V	Si	
	D....18	50.04.0125	1N4448		50V	Si	
	D....19	50.04.0125	1N4448		50V	Si	
	D....20	50.04.0125	1N4448		50V	Si	
	D....21	50.04.0125	1N4448		50V	Si	
	IC....1	50.09.0102	LF357 B	Single High Speed OpAmp			NS
	IC....2	50.05.0283	LM 393	Dual Voltage Comparator			
	IC....3	50.05.0283	LM 393	Dual Voltage Comparator			
	IC....4	50.05.0283	LM 393	Dual Voltage Comparator			
	IC....5	50.09.0102	LF357 B	Single High Speed OpAmp			NS
	IC....6	50.09.0102	LF357 B	Single High Speed OpAmp			NS
	IC....7	50.09.0102	LF357 B	Single High Speed OpAmp			NS
	IC....8	50.09.0102	LF357 B	Single High Speed OpAmp			NS
	J.....1	54.01.0219	15-pin	CIS-Connector			AMP
	J.....9	54.01.0226	20-pin	CIS-Connector			AMP
	J....10	54.01.0294	16-pin	CIS-Connector			AMP
	J....12	54.01.0290	10-pin	CIS-Connector			AMP
	MP....1	43.01.0108	1 pce	ESE Warning Label			
	MP....2	1.010.055.22	1 pce	Rivet Nut M3*11mm			ST
	MP....3	1.727.652.10	1 pce	Nr. Label			ST
	MP....4	1.727.652.12	1 pce	AUDIO REMOTE INTERFACE PCB			ST
	P.....9	54.01.0330	20-pin	CIS pin strip vertical			AMP
	P....10	54.01.0326	16-pin	CIS pin strip vertical			AMP
	P....12	54.01.0320	10-pin	CIS pin strip vertical			AMP
	R.....1	57.11.3103	10 kOhm	1%	0.25 W	MF	
	R.....2	57.11.3103	10 kOhm	1%	0.25 W	MF	
	R.....3	57.11.3103	10 kOhm	1%	0.25 W	MF	
	R.....4	57.11.3103	10 kOhm	1%	0.25 W	MF	
	R.....5	57.11.3103	10 kOhm	1%	0.25 W	MF	
	R.....6	57.11.3103	10 kOhm	1%	0.25 W	MF	
	R.....7	57.11.5155	1.5 MOhm	1%	0.25 W	MF	
	R.....8	57.11.5155	1.5 MOhm	1%	0.25 W	MF	
	R.....9	57.11.5155	1.5 MOhm	1%	0.25 W	MF	
	R....10	57.11.5155	1.5 MOhm	1%	0.25 W	MF	
	R....11	57.11.5155	1.5 MOhm	1%	0.25 W	MF	
	R....12	57.11.3103	10 kOhm	1%	0.25 W	MF	
	R....13	57.11.3332	3.3 kOhm	1%	0.25 W	MF	
	R....14	57.11.3104	100 kOhm	1%	0.25 W	MF	
	R....15	57.11.3332	3.3 kOhm	1%	0.25 W	MF	
	R....16	57.11.3104	100 kOhm	1%	0.25 W	MF	
	R....17	57.11.3332	3.3 kOhm	1%	0.25 W	MF	
	R....18	57.11.3104	100 kOhm	1%	0.25 W	MF	
	R....19	57.11.3332	3.3 kOhm	1%	0.25 W	MF	
	R....20	57.11.3104	100 kOhm	1%	0.25 W	MF	
	R....21	57.11.3332	3.3 kOhm	1%	0.25 W	MF	
	R....22	57.11.3104	100 kOhm	1%	0.25 W	MF	
	R....23	57.11.3472	4.7 kOhm	1%	0.25 W	MF	
	R....24	57.11.3472	4.7 kOhm	1%	0.25 W	MF	
	R....25	57.11.3472	4.7 kOhm	1%	0.25 W	MF	
	R....26	57.11.3472	4.7 kOhm	1%	0.25 W	MF	
	R....27	57.11.3472	4.7 kOhm	1%	0.25 W	MF	
	R....28	57.11.3220	22 Ohm	1%	0.25 W	MF	
	R....29	57.11.3220	22 Ohm	1%	0.25 W	MF	
	R....30	57.11.3220	22 Ohm	1%	0.25 W	MF	
	R....31	57.11.3220	22 Ohm	1%	0.25 W	MF	
	R....32	57.11.3220	22 Ohm	1%	0.25 W	MF	
	R....33	57.11.3222	2.2 kOhm	1%	0.25 W	MF	
	R....34	57.11.3222	2.2 kOhm	1%	0.25 W	MF	
	R....35	57.11.3222	2.2 kOhm	1%	0.25 W	MF	
	R....36	57.11.3222	2.2 kOhm	1%	0.25 W	MF	
	R....37	57.11.3222	2.2 kOhm	1%	0.25 W	MF	
	XIC...1	53.03.0166	8-pole	IC-Socket			
	XIC...2	53.03.0166	8-pole	IC-Socket			
	XIC...3	53.03.0166	8-pole	IC-Socket			
	XIC...4	53.03.0166	8-pole	IC-Socket			
	XIC...5	53.03.0166	8-pole	IC-Socket			
	XIC...6	53.03.0166	8-pole	IC-Socket			
	XIC...7	53.03.0166	8-pole	IC-Socket			

Ad	..POS..	...REF.No...	DESCRIPTION	MANUFACTURER
	XIC...8	53.03.0166	8-pole IC-Socket	

MF= Metal Film / PETP= Polyester / ALU= Aluminium

MANUFACTURER: MOT= Motorola / NS= National Semiconductor
ST = STUDER

1.727.652.81 AUDIO REMOTE INTERFACE DS 90/11/0500

END
+

FILTER BOARD 15 PINS 1.727.259.00
-FOR NRS CONTROL CABLE 1.727.266.00

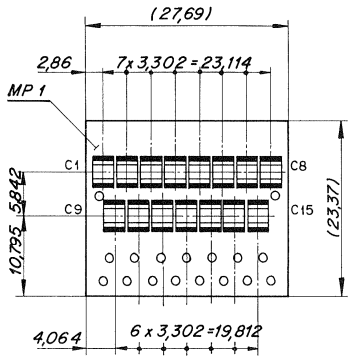

C1..... C15 bestückt

Änderung					
					3
					2
					1
Ausgabe	16.5.91	BH	WK	Rm	0
	Datum	Gez.	Gepr.	Ges.	Index
Kopie für:					

STUDER REGENSDORF ZÜRICH	Benennung: Filter Board 15P	Nummer: 1.727.259-00

Ad	..POS..	...REF.No...	DESCRIPTION	MANUFACTURER
	C.....1	59.60.1104	100n 10 %, 630V X7R	Cer
	C.....2	59.60.1104	100n 10 %, 630V X7R	Cer
	C.....3	59.60.1104	100n 10 %, 630V X7R	Cer
	C.....4	59.60.1104	100n 10 %, 630V X7R	Cer
	C.....5	59.60.1104	100n 10 %, 630V X7R	Cer
	C.....6	59.60.1104	100n 10 %, 630V X7R	Cer
	C.....7	59.60.1104	100n 10 %, 630V X7R	Cer
	C.....8	59.60.1104	100n 10 %, 630V X7R	Cer
	C.....9	59.60.1104	100n 10 %, 630V X7R	Cer
	C....10	59.60.1104	100n 10 %, 630V X7R	Cer
	C....11	59.60.1104	100n 10 %, 630V X7R	Cer
	C....12	59.60.1104	100n 10 %, 630V X7R	Cer
	C....13	59.60.1104	100n 10 %, 630V X7R	Cer
	C....14	59.60.1104	100n 10 %, 630V X7R	Cer
	C....15	59.60.1104	100n 10 %, 630V X7R	Cer
	MP....1	1.727.259.11	1 pce Filter PCB	

Cer= Ceramic

1.727.259.00 FILTER BOARD 15P Wth91/05/1500

FILTER BOARD 25 PINS 1.727.260.00
-FOR PARALLEL REMOTE CONTROL CABLE
1.727.261.00

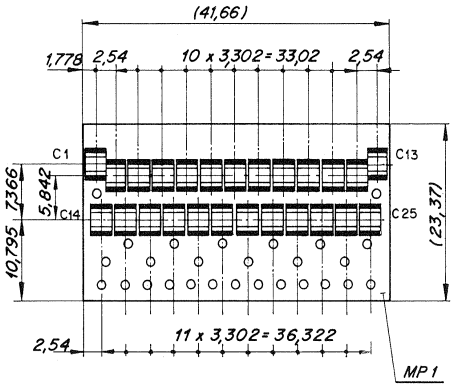

C13 nicht bestückt

Änderung					
					③
					②
					①
Ausgabe	16.5.91	JK	Wil	Rim	⓪
	Datum	Gez.	Gepr.	Gen.	Index

Kopie für:

STUDER REGENSDORF ZÜRICH	Benennung: Filter Board 25P	Nummer: 1.727.260-00

Ad	..POS..	...REF.No...	DESCRIPTION	MANUFACTURER
	C.....1	59.60.1104	100n 10 %, 630V X7R	Cer
	C.....2	59.60.1104	100n 10 %, 630V X7R	Cer
	C.....3	59.60.1104	100n 10 %, 630V X7R	Cer
	C.....4	59.60.1104	100n 10 %, 630V X7R	Cer
	C.....5	59.60.1104	100n 10 %, 630V X7R	Cer
	C.....6	59.60.1104	100n 10 %, 630V X7R	Cer
	C.....7	59.60.1104	100n 10 %, 630V X7R	Cer
	C.....8	59.60.1104	100n 10 %, 630V X7R	Cer
	C.....9	59.60.1104	100n 10 %, 630V X7R	Cer
	C....10	59.60.1104	100n 10 %, 630V X7R	Cer
	C....11	59.60.1104	100n 10 %, 630V X7R	Cer
	C....12	59.60.1104	100n 10 %, 630V X7R	Cer
	C....13	00.00.0000	not used	
	C....14	59.60.1104	100n 10 %, 630V X7R	Cer
	C....15	59.60.1104	100n 10 %, 630V X7R	Cer
	C....16	59.60.1104	100n 10 %, 630V X7R	Cer
	C....17	59.60.1104	100n 10 %, 630V X7R	Cer
	C....18	59.60.1104	100n 10 %, 630V X7R	Cer
	C....19	59.60.1104	100n 10 %, 630V X7R	Cer
	C....20	59.60.1104	100n 10 %, 630V X7R	Cer
	C....21	59.60.1104	100n 10 %, 630V X7R	Cer
	C....22	59.60.1104	100n 10 %, 630V X7R	Cer
	C....23	59.60.1104	100n 10 %, 630V X7R	Cer
	C....24	59.60.1104	100n 10 %, 630V X7R	Cer
	C....25	59.60.1104	100n 10 %, 630V X7R	Cer
	MP....1	1.727.260.11	1 pce Filter PCB	

Cer= Ceramic

1.727.260.00 FILTER BOARD 25P Wth91/05/1500

FILTER BOARD 25 PINS 1.727.265.00
-FOR SYNCHRONIZER REMOTE CONTROL CABLE
1.727.263.00

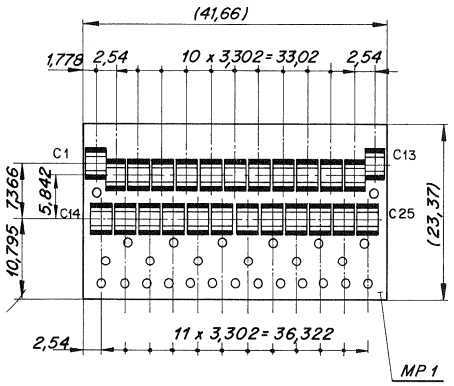

nicht bestückt C7, C11, C13

Änderung					
					③
					②
					①
Ausgabe	16.5.91	FH	WH	Rom.	⓪
	Datum	Gez.	Gepr.	Gen.	Index

Kopie für:

STUDER REGENSDORF ZÜRICH	Benennung: Filter Board 25P	Nummer: 1.727.265-00

Ad	..POS..	...REF.No...		DESCRIPTION				.....MANUFACTURER
	C.....1	59.60.1104		100n	10 %,	630V	X7R	Cer
	C.....2	59.60.1104		100n	10 %,	630V	X7R	Cer
	C.....3	59.60.1104		100n	10 %,	630V	X7R	Cer
	C.....4	59.60.1104		100n	10 %,	630V	X7R	Cer
	C.....5	59.60.1104		100n	10 %,	630V	X7R	Cer
	C.....6	59.60.1104		100n	10 %,	630V	X7R	Cer
	C.....7	00.00.0000			not used			
	C.....8	59.60.1104		100n	10 %,	630V	X7R	Cer
	C.....9	59.60.1104		100n	10 %,	630V	X7R	Cer
	C....10	59.60.1104		100n	10 %,	630V	X7R	Cer
	C....11	00.00.0000			not used			
	C....12	59.60.1104		100n	10 %,	630V	X7R	Cer
	C....13	00.00.0000			not used			
	C....14	59.60.1104		100n	10 %,	630V	X7R	Cer
	C....15	59.60.1104		100n	10 %,	630V	X7R	Cer
	C....16	59.60.1104		100n	10 %,	630V	X7R	Cer
	C....17	59.60.1104		100n	10 %,	630V	X7R	Cer
	C....18	59.60.1104		100n	10 %,	630V	X7R	Cer
	C....19	59.60.1104		100n	10 %,	630V	X7R	Cer
	C....20	59.60.1104		100n	10 %,	630V	X7R	Cer
	C....21	59.60.1104		100n	10 %,	630V	X7R	Cer
	C....22	59.60.1104		100n	10 %,	630V	X7R	Cer
	C....23	59.60.1104		100n	10 %,	630V	X7R	Cer
	C....24	59.60.1104		100n	10 %,	630V	X7R	Cer
	C....25	59.60.1104		100n	10 %,	630V	X7R	Cer
	MP....1	1.727.260.11	1 pce	Filter PCB				

Cer= Ceramic

1.727.265.00 FILTER BOARD 25P Wth91/05/1500

FILTER BOARD 9 PINS 1.727.258.00
-FOR SERIAL REMOTE CONTROL CABLE 1.727.245.81
-FOR TIME CODE REMOTE DISPLAY CABLE 1.727.725.81

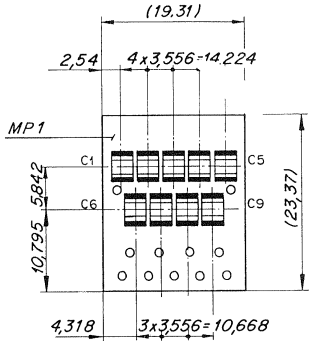

C5 und C9 bestückt

Änderung						③
						②
						①
Ausgabe	16.5.91					⓪
	Datum	Gez.	Gepr.	Ges.	Index	
Kopie für:						
STUDER REGENSDORF ZÜRICH	Benennung: Filter Board 9P			Nummer: 1.727.258-00		

Ad	..POS..	...REF.No...	DESCRIPTION	.....	MANUFACTURER
	C.....1	00.00.0000		not used	
	C.....2	00.00.0000		not used	
	C.....3	00.00.0000		not used	
	C.....4	00.00.0000		not used	
	C.....5	59.60.1104	100n	10 %, 630V X7R	Cer
	C.....6	00.00.0000		not used	
	C.....7	00.00.0000		not used	
	C.....8	00.00.0000		not used	
	C.....9	59.60.1104	100n	10 %, 630V X7R	Cer
	MP....1	1.727.258.11	1 pce	Filter PCB	

Cer= Ceramic

1.727.258.00 FILTER BOARD 9P Wth91/05/1500

END
→

TAPE MOVE SENSOR 1.727.321.00

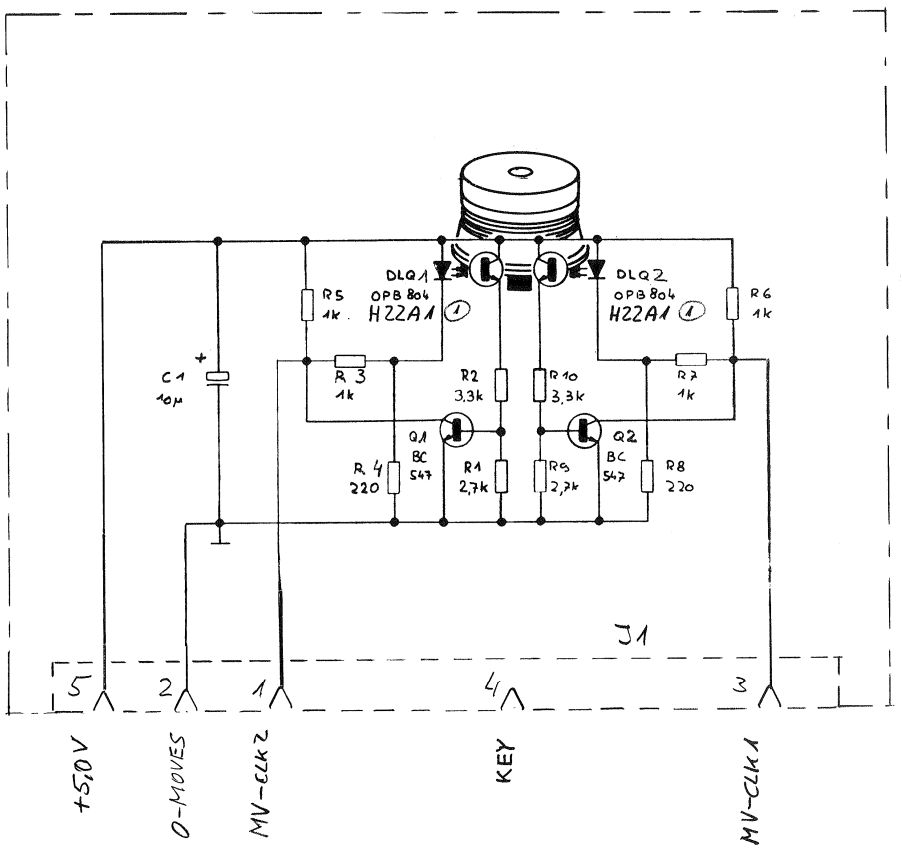

⓪ 18.8.86 WH	① 13.11.87 WH.	. .	. .	. .
	A 807 GR 24			PAGE 1 OF 1
STUDER	Move Sensor Board			1.727.321.00

TAPE MOVE SENSOR 1.727.321.00

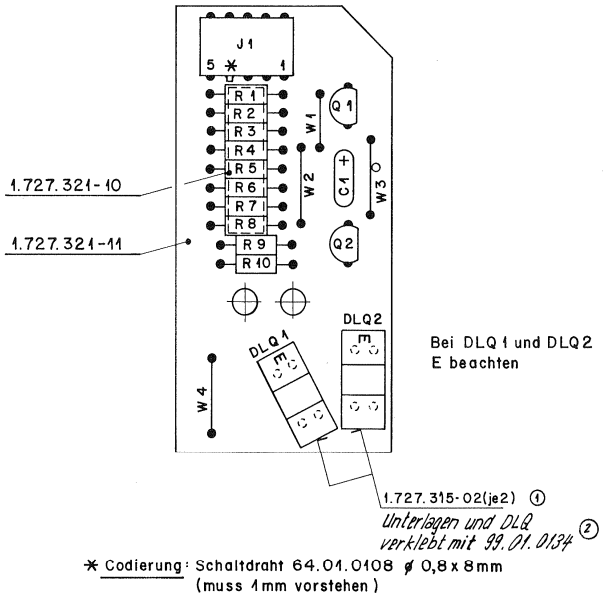

IND.	POS.NO.	PART NO.	VALUE	SPECIFICATIONS / EQUIVALENT	MANUF.
	C.....1	59.26.2100	10 uF	20%, 16V, Sal	Ph
(00)	DLQ...1	50.04.2128	OPB804		Op
(01)	DLQ...1	50.04.2128	H22 A1		GE
(00)	DLQ...2	50.04.2128	OPB804		Op
(01)	DLQ...2	50.04.2128	H22 A1		GE
	J.....1	54.01.0305	5 Pol	CIS Par.	
	MP....1	1.727.321.11	1 pce	Move Sensor PCB	St
	MP....2	1.727.321.10	1 pce	No. Label	St
(01)	MP....3	1.727.315.02	4 pce	Spacer	St
	Q.....1	50.03.0436	BC237B	BC547B, BC550B	ITT,Mot,Ph,Sie,Tf
	Q.....2	50.03.0436	BC237B	BC547B, BC550B	ITT,Mot,Ph,Sie,Tf
	R.....1	57.11.4272	2.7 kOhm	2%, 0.25W, MF	
	R.....2	57.11.4332	3.3 kOhm	2%, 0.25W, MF	
	R.....3	57.11.4102	1 kOhm	2%, 0.25W, MF	
	R.....4	57.11.4221	220 Ohm	2%, 0.25W, MF	
	R.....5	57.11.4102	1 kOhm	2%, 0.25W, MF	
	R.....6	57.11.4102	1 kOhm	2%, 0.25W, MF	
	R.....7	57.11.4102	1 kOhm	2%, 0.25W, MF	
	R.....8	57.11.4221	220 Ohm	2%, 0.25W, MF	
	R.....9	57.11.4272	2.7 kOhm	2%, 0.25W, MF	
	R....10	57.11.4332	3.3 kOhm	2%, 0.25W, MF	
	W.....1	64.01.0106		Wire Bridge	
	W.....2	64.01.0106		Wire Bridge	
	W.....3	64.01.0106		Wire Bridge	
	W.....4	64.01.0106		Wire Bridge	

IND.	POS.NO.	PART NO.	VALUE	SPECIFICATIONS / EQUIVALENT	MANUF.

(01) Type change

Sal=Solid aluminium

MANUFACTURER: ITT=Intermetall, Mot=Motorola, Op=Optron, Ph=Philips,
Sie=Siemens, Tf=Telefunken

ORIG 85/08/08 (01) 87/11/13

SPOOLING MOTOR TACHO LEFT 1.727.317.00 (2+4CH)
-SPOOLING MOTOR TACHO RIGHT 1.727.318.00 (2+4CH)

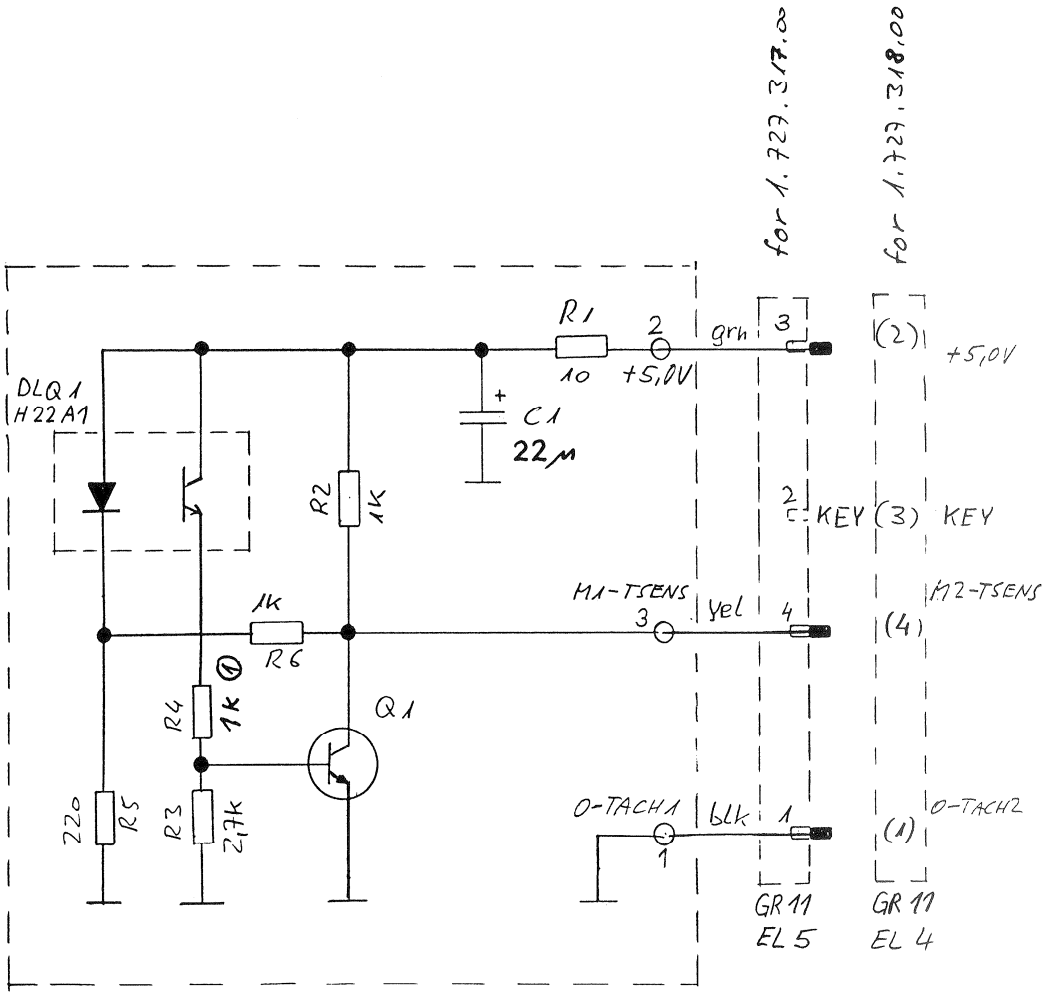

⓪ 24.1.89 GP	① 21.3.89 GP	○ ..	○ ..	○ ..
	A 807			PAGE 1 OF 1
STUDER	SPOOLING MOTOR TACHO LEFT			1.727.317.00
	RIGHT			1.727.318.00

SPOOLING MOTOR TACHO LEFT 1.727.317.00 (2+4CH)
-SPOOLING MOTOR TACHO RIGHT 1.727.318.00 (2+4CH)

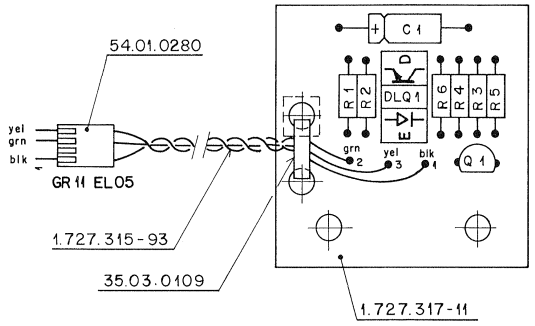

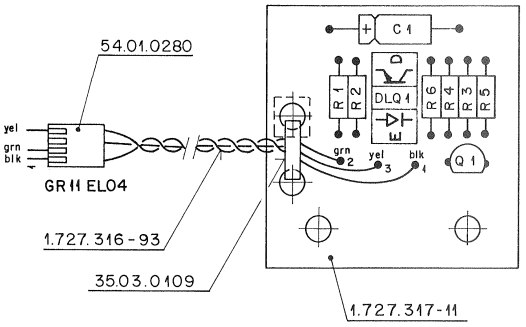

IND.	POS.NO.	PART NO.	VALUE	SPECIFICATIONS / EQUIVALENT	MANUF.
	C.....1	59.25.4220	22 uF	-20%, 25V, El	
	DLQ...1	50.04.2128	H22 A1		GE
	MP....1	1.727.317.11	1 pce	Sp.Motor Tacho PCB	St
	MP....2	1.727.315.93	1 pce	L-LST Sp.Motor Tacho,left	St
	MP....3	54.01.0280	1 pce	CIS Case, 4 Pol	AMP
	MP....4	1.727.317.10	1 pce	No. Label	St
	MP....5	1.727.315.01	1 pce	Label, GR 11 EL 05	St
	Q.....1	50.03.0436	BC237B	BC547B, BC550B	ITT,Mot,Ph,Sie,Tf
	R.....1	57.11.3100	10 Ohm	2%, 0.25W, MF	
	R.....2	57.11.3102	1 kOhm	2%, 0.25W, MF	
	R.....3	57.11.3272	2.7 kOhm	2%, 0.25W, MF	
(00)	R.....4	57.11.3332	3.3 kOhm	2%, 0.25W, MF	
(01)	R.....4	57.11.3102	1 kOhm	2%, 0.25W, MF	
	R.....5	57.11.3221	220 Ohm	2%, 0.25W, MF	
	R.....6	57.11.3102	1 kOhm	2%, 0.25W, MF	

(01) Reduction of Photo-Transistor Switch-Off Time.

MANUFACTURER: GE=General Electric, ITT=Intermetall, Mot=Motorola,
Ph=Philips, Sie=Siemens, Tf=Telefunken, St=Studer

ORIG 89/01/24 (01) 89/03/21

S T U D E R (01) 89/03/21 GP SPOOLING MOTOR TACHO LEFT PL 1.727.317.00 PAGE 1

IND.	POS.NO.	PART NO.	VALUE	SPECIFICATIONS / EQUIVALENT	MANUF.
	C.....1	59.25.4220	22 uF	-20%, 25V, El	
	DLQ...1	50.04.2128	H22 A1		GE
	MP....1	1.727.317.11	1 pce	Sp.Motor Tacho PCB	St
	MP....2	1.727.316.93	1 pce	L-LST Sp.Motor Tacho,right	St
	MP....3	54.01.0280	1 pce	CIS Case, 4 Pol	AMP
	MP....4	1.727.318.10	1 pce	No. Label	St
	MP....5	1.727.316.01	1 pce	Label, GR 11 EL 04	St
	Q.....1	50.03.0436	BC237B	BC547B, BC550B	ITT,Mot,Ph,Sie,Tf
	R.....1	57.11.3100	10 Ohm	2%, 0.25W, MF	
	R.....2	57.11.3102	1 kOhm	2%, 0.25W, MF	
	R.....3	57.11.3272	2.7 kOhm	2%, 0.25W, MF	
(00)	R.....4	57.11.3332	3.3 kOhm	2%, 0.25W, MF	
(01)	R.....4	57.11.3102	1 kOhm	2%, 0.25W, MF	
	R.....5	57.11.3221	220 Ohm	2%, 0.25W, MF	
	R.....6	57.11.3102	1 kOhm	2%, 0.25W, MF	

(01) Reduction of Photo-Transistor Switch-Off Time.

MANUFACTURER: GE=General Electric, ITT=Intermetall, Mot=Motorola,
Ph=Philips, Sie=Siemens, Tf=Telefunken, St=Studer

ORIG 89/01/24 (01) 89/03/21

S T U D E R (01) 89/03/21 GP SPOOLING MOTOR TACHO RIGHT PL 1.727.318.00 PAGE 1

TAPE TENSION SENSOR 1.727.320.81

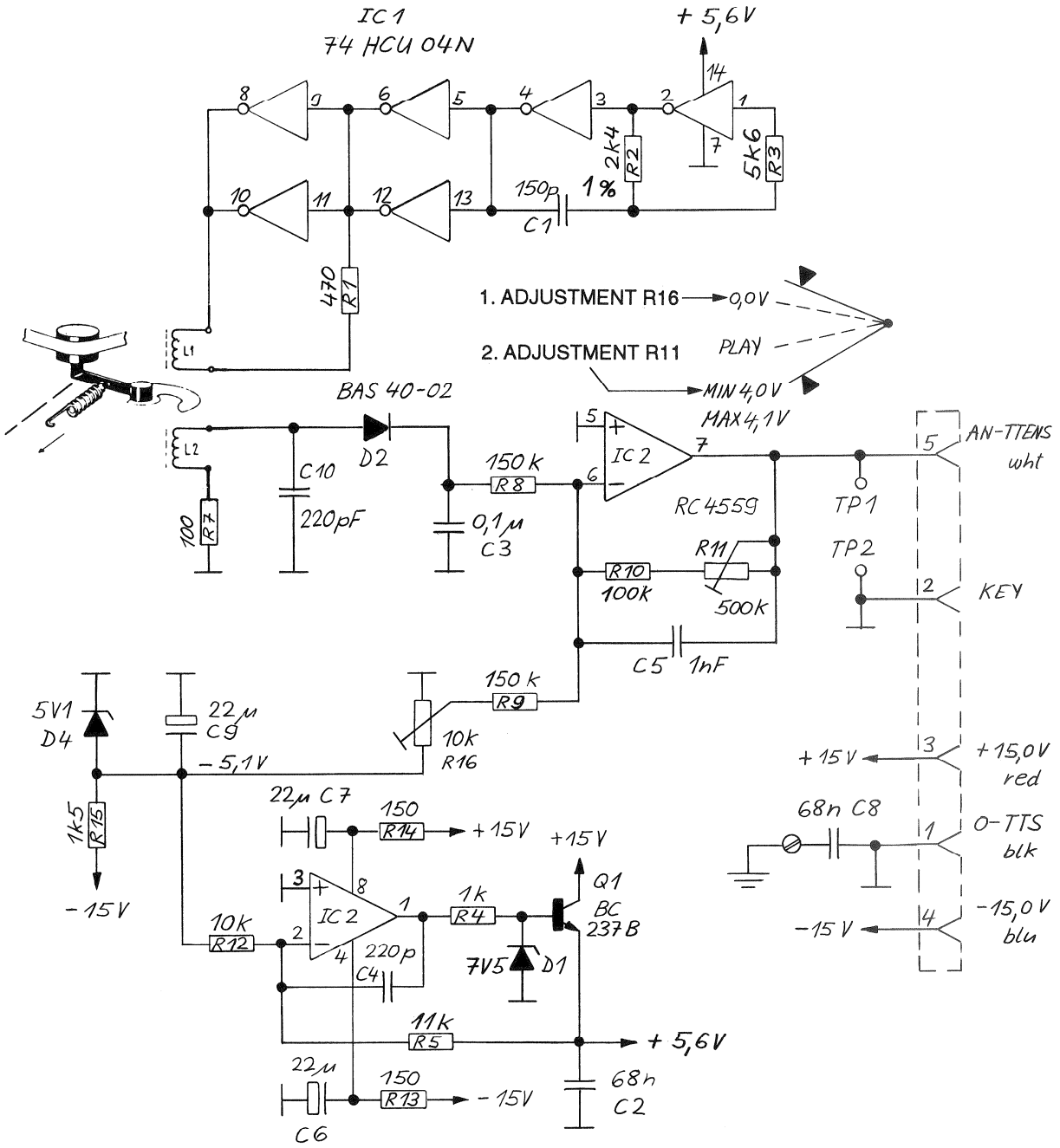

TP1 = TAPE TENSION CONTROL VOLTAGE (+4V-0V)
TP2 = 0V

⓪ 7.3.94 GP	○ . .	○ . .	○ . .	○ . .
	A 807 GR13			PAGE 1 OF 1
STUDER	TAPE TENSION SENSOR BOARD		SC	1.727.320.81

TAPE TENSION SENSOR 1.727.320.81

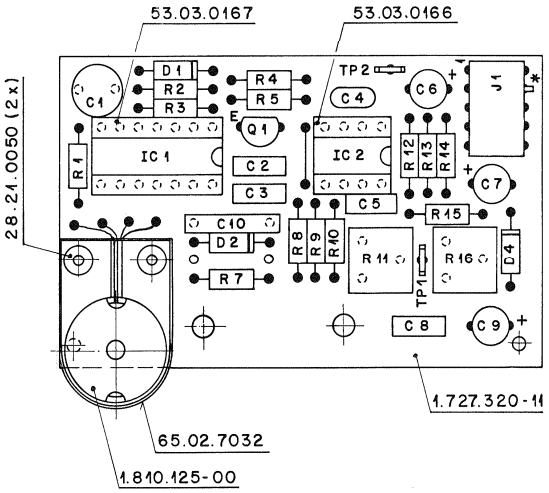

Änderung					
					3
					2
					1
Ausgabe	18.4.94	DH	GP		0
	Datum	Gez.	Gepr.	Ges.	Index

Kopie für:

STUDER REGENSDORF ZÜRICH	Benennung: TAPE TENSION SENSOR BOARD ESE	Nummer: 1.727.320-81

Ad	..POS..	...REF.No...	DESCRIPTION	MANUFACTURER
	C.....1	59.05.1151	150 pF 1%, 50V, PP	
	C.....2	59.06.0683	68 nF 10%, 50V, PETP	
	C.....3	59.06.0104	0.1 uF 10%, 50V, PETP	
	C.....4	59.32.1221	220 pF 10%, 50V, Cer	
	C.....5	59.06.0102	1 nF 10%, 50V, PETP	
	C.....6	59.22.5220	22 uF -20%, 25V, El	
	C.....7	59.22.5220	22 uF -20%, 25V, El	
	C.....8	59.06.0683	68 nF 10%, 50V, PETP	
	C.....9	59.22.5220	22 uF -20% 25V, EL	
	C....10	59.11.6221	220 pF 5%, 50V, PC	
	D.....1	50.04.1103	7.5 V 5%, 0.4W, Zener	
	D.....2	50.04.0127	BAT 85 BAT 42, BAS 40-02	
	D.....4	50.04.1112	5.1 V 5%, 0.4W, Zener	
	IC....1	50.17.1904	74HCU04N Hex Unbuffered Inverter, HC-MOS	
	IC....2	50.09.0107	RC4559 Dual Op-Amp	
	J.....1	54.01.0305	5-Pole CIS Socket Strip	
	L.....1	1.810.125.00	Coil	
	L.....2	1.810.125.00	Coil	
	MP....1	28.21.0050	2 pcs Tubular Rivet 2.5*17	
	MP....2	1.727.320.10	1 pcs No. Label	
	MP....3	1.727.320.11	1 pcs TAPE TENSION SENSOR PCB	
	MP....4	43.01.0108	1 pcs ESE Warning Label	
	Q.....1	50.03.0436	BC237B BC547B, BC550B	
	R.....1	57.11.3471	470 Ohm 1%, 0.25W, MF	
	R.....2	57.11.3242	2.4 kOhm 1%, 0.25W, MF	
	R.....3	57.11.3562	5.6 kOhm 1%, 0.25W, MF	
	R.....4	57.11.3102	1 kOhm 1%, 0.25W, MF	
	R.....5	57.11.3113	11 kOhm 1%, 0.25W, MF	
	R.....7	57.11.3101	100 Ohm 1%, 0.25W, MF	
	R.....8	57.11.3154	150 kOhm 1%, 0.25W, MF	
	R.....9	57.11.3154	150 kOhm 1%, 0.25W, MF	
	R....10	57.11.3104	100 kOhm 1%, 0.25W, MF	
	R....11	58.01.8504	500 kOhm 10%, 0.5 W, PCerm	
	R....12	57.11.3103	10 kOhm 1%, 0.25W, MF	
	R....13	57.11.3151	150 Ohm 1%, 0.25W, MF	
	R....14	57.11.3151	150 Ohm 1%, 0.25W, MF	
	R....15	57.11.3152	1.5 kOhm 1%, 0.25W, MF	
	R....16	58.01.8103	10 kOhm 10%, 0.5 W, PCerm	
	TP....1	54.02.0320	Plug 2.8*0.8	
	TP....2	54.02.0320	Plug 2.8*0.8	
	XIC...1	53.03.0167	14-Pole IC-Socket	
	XIC...2	53.03.0166	8-Pole IC-Socket	

EL=Electrolytic, PETP=Polyester, PP=Polypropylen, SI=Silicon,
MF=Metal Film
MANUFACTURER: ITT=Intermetall, Mot=Motorola, Op=Optron, Ph=Philips,
Sie=Siemens, Tf=Telefunken

1.727.320.81 TAPE TENSION SENSOR BOARD GP 94/03/0700

BLOCK DIAGRAM SPOOLING MOTOR

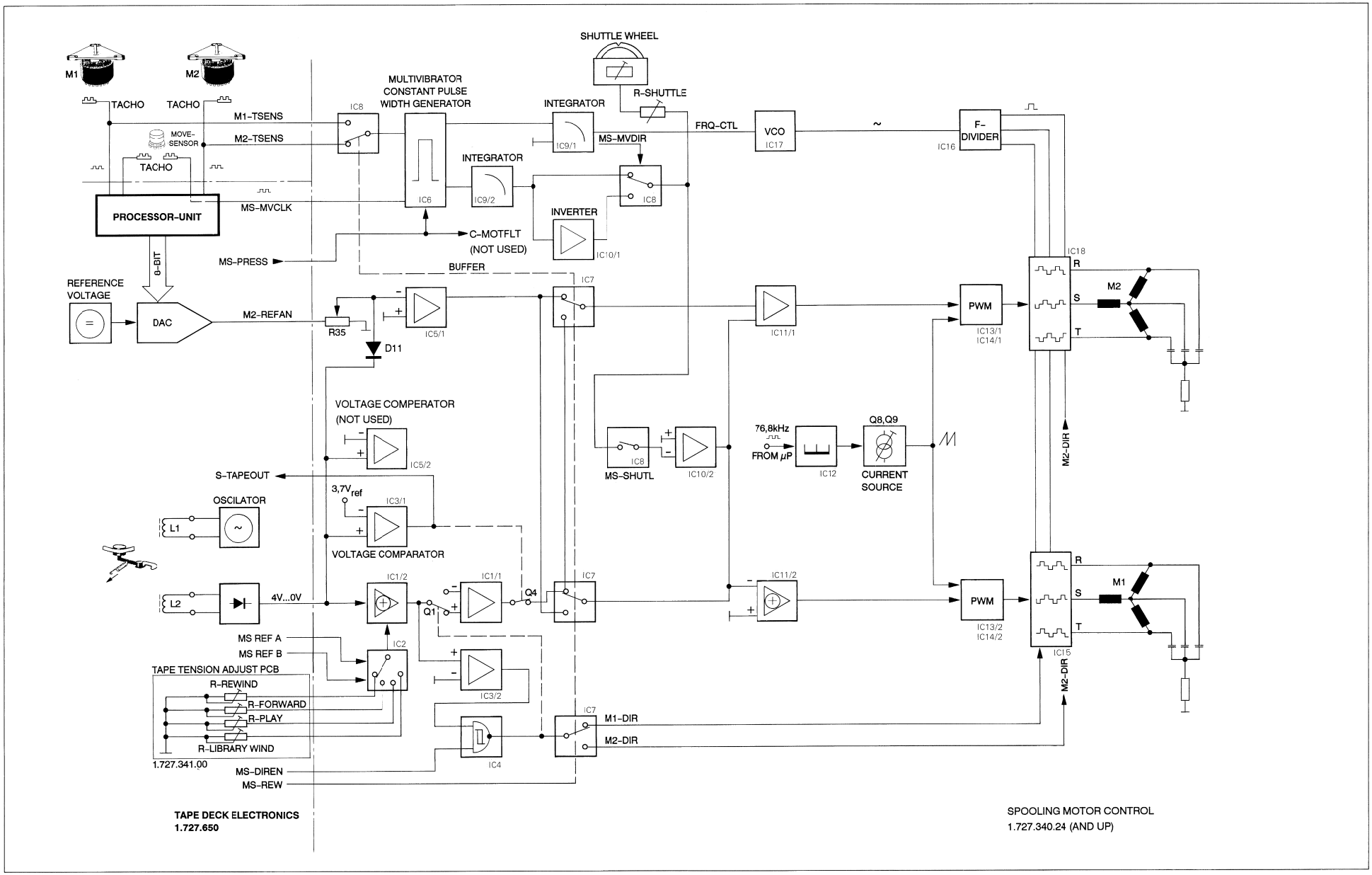

SPOOLING MOTOR CONTROL 1.727.340.24

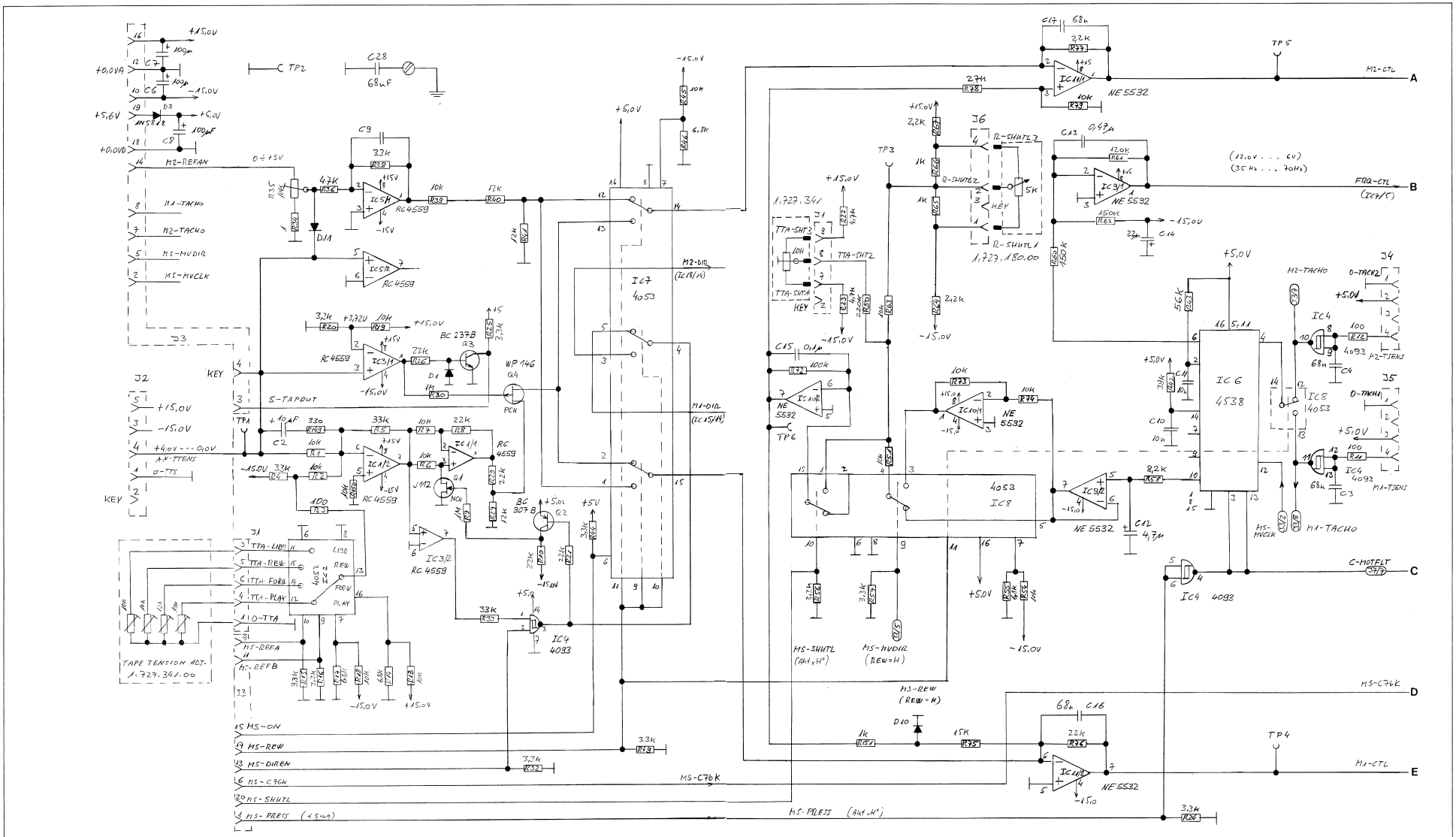

0 25.6.92 WH	. .	. .	. .	. .
	A 807 GR11			PAGE 1 OF 5
STUDER	SPOOLING MOTOR CONTROL			1.727.340.24

0 25.6.92 WH	. .	. .	. .	. .
	A 807 GR11			PAGE 2 OF 5
STUDER	SPOOLING MOTOR CONTROL			1.727.340.24

SPOOLING MOTOR CONTROL 1.727.340.24

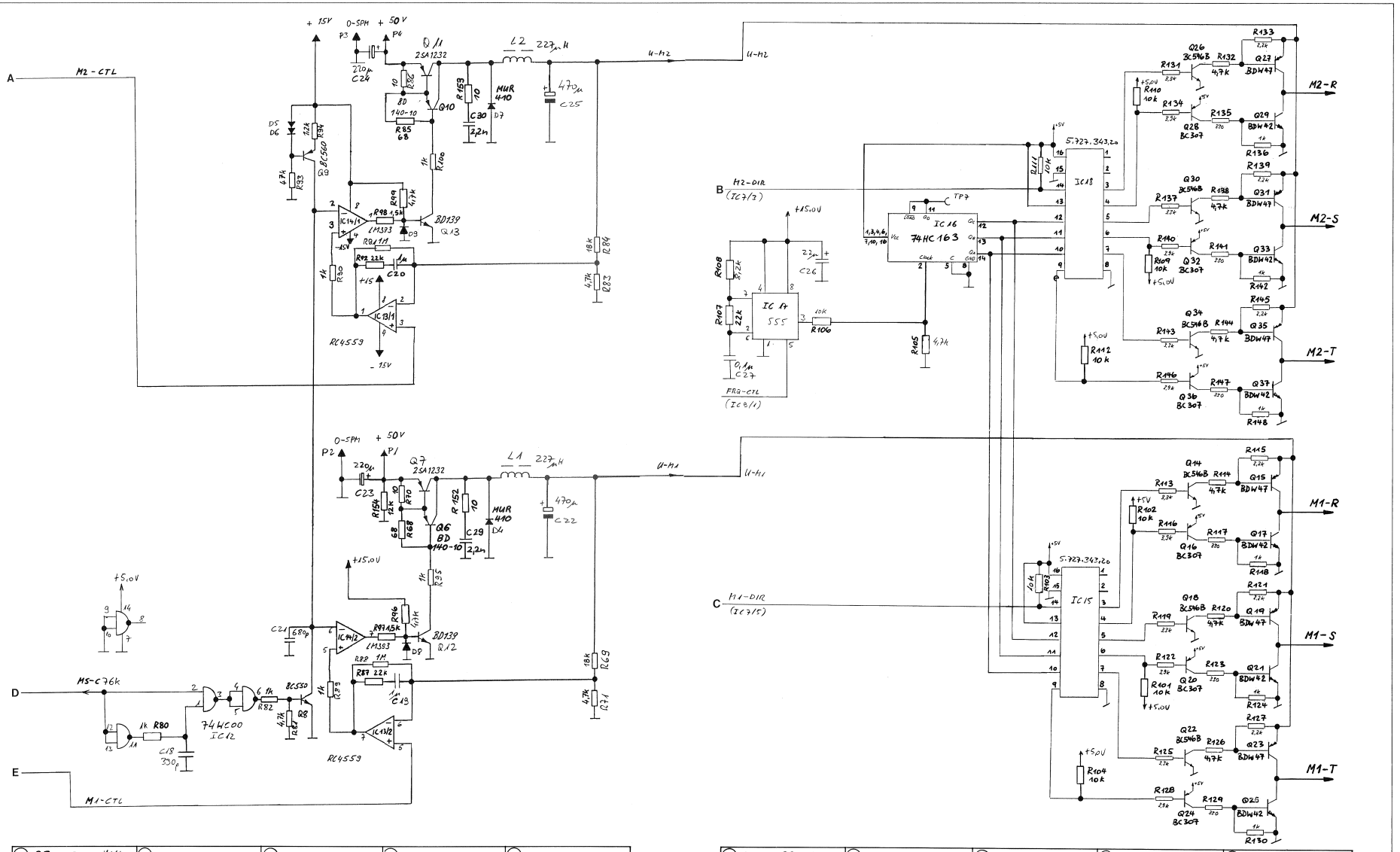

0 25.6.92 WH	. .	. .	. .	. .
	A 807 GR11			PAGE 3 OF 5
STUDER	SPOOLING MOTOR CONTROL			1.727.340.24

0 25.6.92 WH	. .	. .	. .	. .
	A 807 GR11			PAGE 4 OF 5
STUDER	SPOOLING MOTOR CONTROL			1.727.340.24

SPOOLING MOTOR CONTROL 1.727.340.24

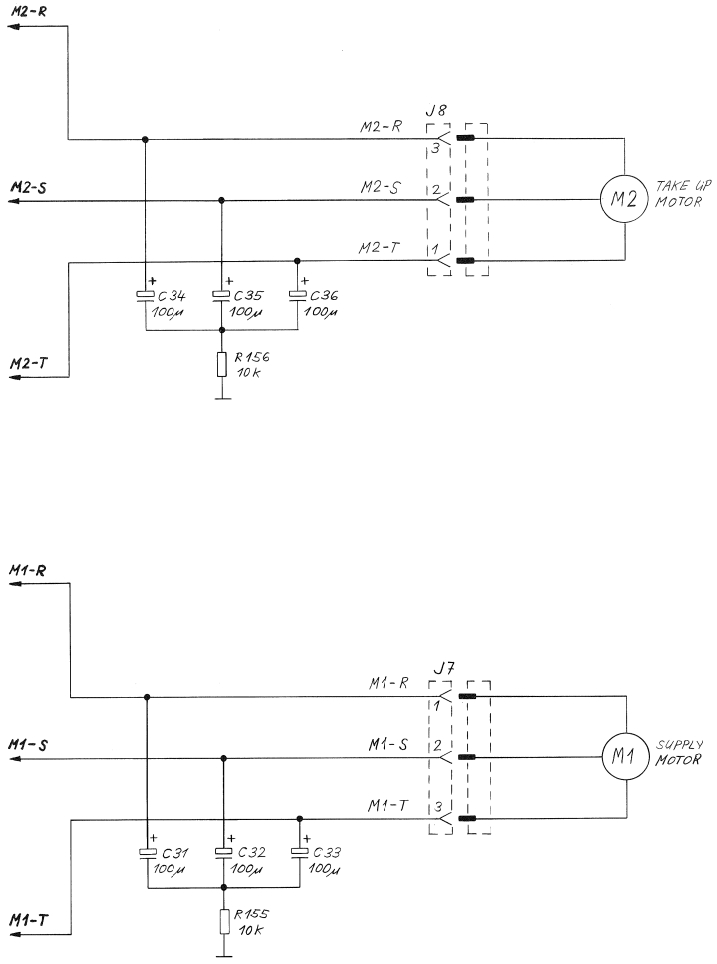

⓪ 25.6.92 GP	○ . .	○ . .	○ . .	○ . .
	A 807 GR 11			PAGE 5 OF 5
STUDER	SPOOLING MOTOR CONTROL			1.727.340.24

SPOOLING MOTOR CONTROL 1.727.340.24

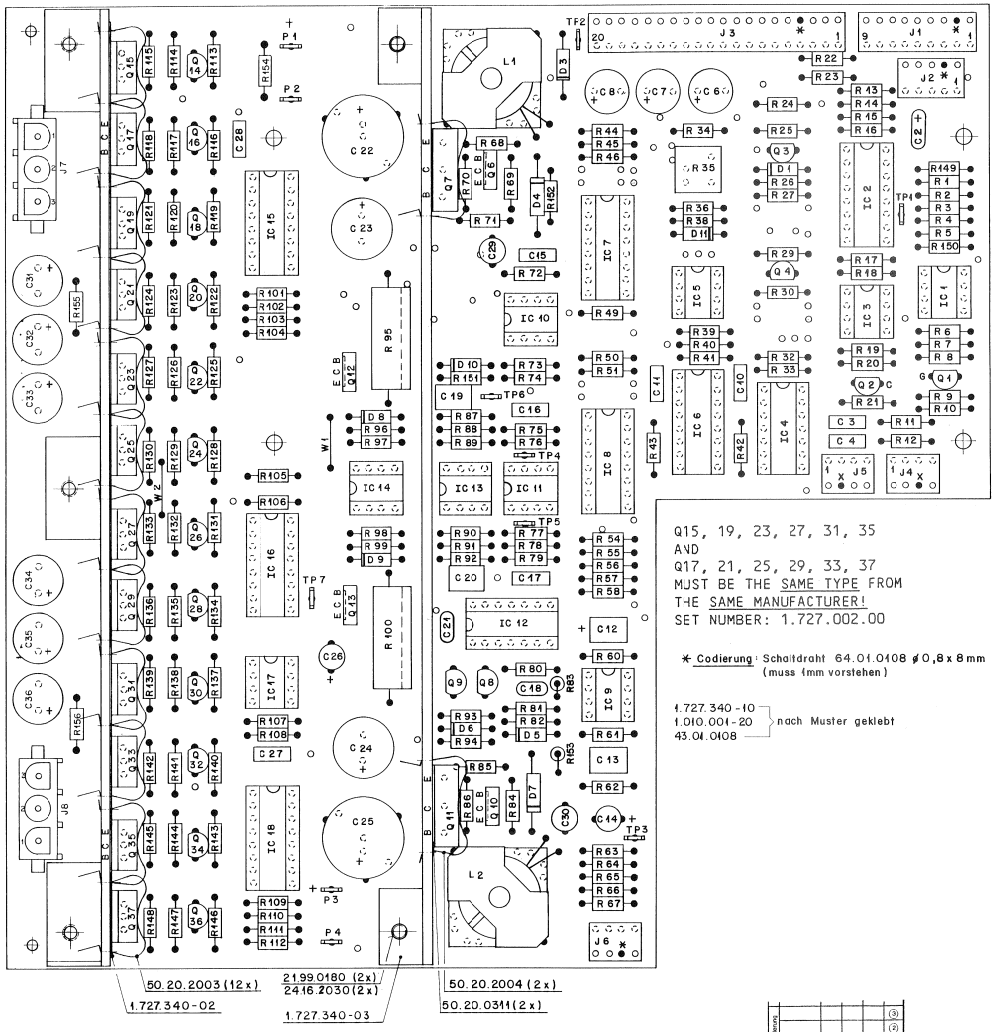

TP1 TAPE TENSION SENSOR
TP2 0.0 V
TP3 SHUTTLE CONTROL
TP4 CONTROL VOLTAGE FOR SUPPLY MOTOR
TP5 CONTROL VOLTAGE FOR TAKE UP MOTOR
TP6 CONTROL VOLTAGE FOR SHUTTLE FUNCTION
TP7 COMMUTATION FREQUENCY FOR SPOOLING MOTORS

R35 = MOTOR CONTROL VOLTAGE ADJUSTMENT
ADJUST FOR 10 V AT TP5 (TP4) WHEN RIGHT (LEFT)
MOTOR IS BLOCKED IN > (<) MODE.

Änderung								③
								②
								①
Ausgabe	296.92	JH	W. Meier					⓪
Datum	Gez.	Gepr.	Genk.	Index				

Kopie für:

STUDER REGENSDORF ZÜRICH | Benennung: SPOOLING MOTOR CONTROL BOARD ESE | Nummer: 1.727.340-24

Ad	..POS..	...REF.No...	DESCRIPTION				MANUFACTURER
C	1	00.00.0000	not used				
C	2	59.26.2100	10 uF	20%	16 V	SAL	Ph
C	3	59.06.0683	68 nF	10%	63 V	PETP	
C	4	59.06.0683	68 nF	10%	63 V	PETP	
C	5	00.00.0000	not used				
C	6	59.22.5101	100 uF	-20%	25 V	EL	
C	7	59.22.5101	100 uF	-20%	25 V	EL	
C	8	59.22.5101	100 uF	-20%	25 V	EL	
C	9	00.00.0000	not used				
C	10	59.06.0103	10 nF	10%	63 V	PETP	
C	11	59.06.0103	10 nF	10%	63 V	PETP	
C	12	59.26.1479	4.7 uF	20%	10 V	SAL	
C	13	59.06.0474	0.47uF	10%	63 V	PETP	
C	14	59.22.5220	22 uF	-20%	25 V	EL	
C	15	59.06.5104	100 nF	5%	63 V	PETP	
C	16	59.06.0683	68 nF	10%	63 V	PETP	
C	17	59.06.0683	68 nF	10%	63 V	PETP	
C	18	59.34.4331	330 pF	5%	63 V	CER	
C	19	59.06.0105	1 uF	10%	63 V	PETP	
C	20	59.06.0105	1 uF	10%	63 V	PETP	
C	21	59.32.1681	680 pF	10%	50 V	CER	
C	22	59.22.8471	470 uF	-20%	63 V	EL	
C	23	59.22.8221	220 uF	-20%	63 V	EL	
C	24	59.22.8221	220 uF	-20%	63 V	EL	
C	25	59.22.8471	470 uF	-20%	63 V	EL	
C	26	59.22.5220	22 uF	-20%	25 V	EL	
C	27	59.06.5104	100 nF	5%	63 V	PETP	
C	28	59.06.0683	68 nF	10%	63 V	PETP	
C	29	59.05.2222	2.2 nF	2.5%	160 V	PP	
C	30	59.05.2222	2.2 nF	2.5%	160 V	PP	
C	31	59.22.8101	100 uF	-20%	63 V	EL	
C	32	59.22.8101	100 uF	-20%	63 V	EL	
C	33	59.22.8101	100 uF	-20%	63 V	EL	
C	34	59.22.8101	100 uF	-20%	63 V	EL	
C	35	59.22.8101	100 uF	-20%	63 V	EL	
C	36	59.22.8101	100 uF	-20%	63 V	EL	
D	1	50.04.0125	1N4448	Diode	50 V	SI	
D	2	00.00.0000	nct used				
D	3	50.04.0512	1N5818	Diode	30 V	Schottky	
D	4	50.04.0521	MUR410	Diode	100 V	SI	
D	5	50.04.0125	1N4448	Diode	50 V	SI	
D	6	50.04.0125	1N4448	Diode	50 V	SI	
D	7	50.04.0521	MUR410	Diode	100 V	SI	
D	8	50.04.0125	1N4448	Diode	50 V	SI	
D	9	50.04.0125	1N4448	Diode	50 V	SI	
D	10	50.04.0125	1N4448	Diode	50 V	SI	
D	11	50.04.0125	1N4448	Diode	50 V	SI	
IC	1	50.09.0107	RC4559	Dual Op. Amp.			
IC	2	50.07.0024	MC 14052	Dual 4-Ch Analog Switch, CMOS			
IC	3	50.09.0107	RC4559	Dual Op. Amp.			
IC	4	50.07.0008	4093	Quad 2-Input NAND Sm.Triger CMOS			
IC	5	50.09.0107	RC4559	Dual Op. Amp.			
IC	6	50.07.0538	4538	Mcnoflop CMOS			
IC	7	50.07.0015	MC 14053	Triple 3-Ch Analog Switch, CMOS			
IC	8	50.07.0015	MC 14053	Triple 3-Ch Analog Switch, CMOS			
IC	9	50.09.0105	NE5532	Dual Op. Amp.			
IC	10	50.09.0105	NE5532	Dual Op. Amp.			
IC	11	50.09.0105	NE5532	Dual Op. Amp.			
IC	12	50.17.1000	74 HC 00	Quad 2-Input NAND Gate			
IC	13	50.09.0107	RC4559	Dual Op. Amp.			
IC	14	50.05.0283	LM 393	Dual Comparator			
IC	15	50.05.0206		Sp. Motor Commutation Ctl. 1.727.343.20			St
IC	16	50.17.1163	74 HC 163	HCMOS			
IC	17	50.05.0158	NE 555 CN	Timer			
IC	18	50.05.0206		Sp. Motor Commutation Ctl. 1.727.343.20			St
J	1	54.01.0217	9-Pole	CIS Socket Strip			AMP
J	2	54.01.0288	5-Pole	CIS Socket Strip			AMP
J	3	54.01.0226	20-Pole	CIS Socket Strip			AMP
J	4	54.01.0241	4-Pole	CIS Socket Strip			AMP
J	5	54.01.0241	4-Pole	CIS Socket Strip			AMP
J	6	54.01.0241	4-Pole	CIS Socket Strip			AMP
J	7	54.25.0003	3-Pole	Power Connector			AMP
J	8	54.25.0003	3-Pole	Power Connector			AMP
L	1	1.022.316.00	227 uH	HF-Coil			
L	2	1.022.316.00	227 uH	HF-Coil			
MP	1	1.727.340.13	1 pce	Spooling Motor Ctl. PCB			St
MP	2	1.727.340.01	1 pce	Heatsink			St
MP	3	1.727.340.02	1 pce	Thermoisolator			St
MP	4	50.20.2003	12 pcs	Mounting Clip			
MP	5	1.727.340.03	1 pce	Heatsink			St
MP	6	50.20.0311	2 pcs	Thermoisolator			
MP	7	50.20.2004	2 pcs	Mounting Clip			
MP	8	21.99.0180	5 pcs	Screw M3 * 5			
MP	9	24.16.2030	5 pcs	Serrat Lock Wacher			
MP	10	43.01.0108	1 pce	ESE Warning Label			St
MP	11	1.727.340.10	1 pce	NO. Label			
P	1	54.02.0320		PLUG 2.8 * 0.8			AMP
P	2	54.02.0320		PLUG 2.8 * 0.8			AMP
P	3	54.02.0320		PLUG 2.8 * 0.8			AMP
P	4	54.02.0320		PLUG 2.8 * 0.8			AMP
Q	1	50.03.0350	MPF 4392	N-CH		FET	
Q	2	50.03.0515	BC307			PNP	
Q	3	50.03.0436	BC237B	BC547B, BC550B		NPN	
Q	4	50.03.0329	WP 146	P-CH		FET	
Q	5	00.00.0000	not used				
Q	6	50.03.0452	BD140-10			PNP	
Q	7	50.03.0518	2SA1232			PNP	
Q	8	50.03.0436	BC237B	BC547B, BC550B		NPN	
Q	9	50.03.0515	BC307			PNP	
Q	10	50.03.0452	BD140-10			PNP	
Q	11	50.03.0518	2SA1232			PNP	
Q	12	50.03.0451	BD139-10			NPN	
Q	13	50.03.0451	BD139-10			NPN	
Q	14	50.03.0491	BC546B			NPN	
Q	15	50.03.0899	BDW47	Note 1		PNP	
Q	16	50.03.0515	BC307			PNP	
Q	17	50.03.0849	BDW42	Note 1		NPN	
Q	18	50.03.0491	BC546B			NPN	
Q	19	50.03.0899	BDW47	Note 1		PNP	
Q	20	50.03.0515	BC307			PNP	
Q	21	50.03.0849	BDW42	Note 1		NPN	
Q	22	50.03.0491	BC546B			NPN	
Q	23	50.03.0899	BDW47	Note 1		PNP	
Q	24	50.03.0515	BC307			PNP	
Q	25	50.03.0849	BDW42	Note 1		NPN	
Q	26	50.03.0491	BC546B			NPN	
Q	27	50.03.0899	BDW47	Note 1		PNP	
Q	28	50.03.0515	BC307			PNP	
Q	29	50.03.0849	BDW42	Note 1		NPN	
Q	30	50.03.0491	BC546B			NPN	
Q	31	50.03.0899	BDW47	Note 1		PNP	
Q	32	50.03.0515	BC307			PNP	
Q	33	50.03.0849	BDW42	Note 1		NPN	
Q	34	50.03.0491	BC546B			NPN	
Q	35	50.03.0899	BDW47	Note 1		PNP	
Q	36	50.03.0515	BC307			PNP	
Q	37	50.03.0849	BDW42	Note 1		NPN	
R	1	57.11.3103	10 kOhm	1%, 0.25W, MF			
R	2	57.11.3103	10 kOhm	1%, 0.25W, MF			
R	3	57.11.3101	100 Ohm	1%, 0.25W, MF			
R	4	57.11.3333	33 kOhm	1%, 0.25W, MF			
R	5	57.11.3333	33 kOhm	1%, 0.25W, MF			
R	6	57.11.3103	10 kOhm	1%, 0.25W, MF			
R	7	57.11.3103	10 kOhm	1%, 0.25W, MF			
R	8	57.11.3223	22 kOhm	1%, 0.25W, MF			
R	9	57.11.3105	1 MOhm	1%, 0.25W, MF			
R	10	57.11.3223	22 kOhm	1%, 0.25W, MF			
R	11	57.11.3101	100 Ohm	1%, 0.25W, MF			
R	12	57.11.3101	100 Ohm	1%, 0.25W, MF			
R	13	57.11.3103	10 kOhm	1%, 0.25W, MF			
R	14	57.11.3682	6.8 kOhm	1%, 0.25W, MF			
R	15	57.11.3332	3.3 kOhm	1%, 0.25W, MF			
R	16	57.11.3332	3.3 kOhm	1%, 0.25W, MF			
R	17	57.11.3682	6.8 kOhm	1%, 0.25W, MF			
R	18	57.11.3103	10 kOhm	1%, 0.25W, MF			
R	19	57.11.3103	10 kOhm	1%, 0.25W, MF			
R	20	57.11.3332	3.3 kOhm	1%, 0.25W, MF			
R	21	57.11.3223	22 kOhm	1%, 0.25W, MF			
R	22	57.11.3472	4.7 kOhm	1%, 0.25W, MF			
R	23	57.11.3472	4.7 kOhm	1%, 0.25W, MF			
R	24	57.11.3332	3.3 kOhm	1%, 0.25W, MF			
R	25	57.11.3332	3.3 kOhm	1%, 0.25W, MF			
R	26	57.11.3223	22 kOhm	1%, 0.25W, MF			
R	27	57.11.3123	12 kOhm	1%, 0.25W, MF			
R	28	00.00.0000		not used			
R	29	57.11.3223	22 kOhm	1%, 0.25W, MF			
R	30	57.11.3105	1 MOhm	1%, 0.25W, MF			
R	31	00.00.0000		not used			
R	32	57.11.3332	3.3 kOhm	1%, 0.25W, MF			
R	33	57.11.3333	33 kOhm	1%, 0.25W, MF			
R	34	57.11.3109	1 Ohm	1%, 0.25W, MF			
R	35	58.01.8103	10 kOhm	Potmeter PMG			
R	36	57.11.3472	4.7 kOhm	1%, 0.25W, MF			
R	37	00.00.0000		not used			
R	38	57.11.3333	33 kOhm	1%, 0.25W, MF			
R	39	57.11.3103	10 kOhm	1%, 0.25W, MF			
R	40	57.11.3123	12 kOhm	1%, 0.25W, MF			
R	41	57.11.3123	12 kOhm	1%, 0.25W, MF			
R	42	57.11.3393	39 kOhm	1%, 0.25W, MF			
R	43	57.11.3563	56 kOhm	1%, 0.25W, MF			
R	44	57.11.3332	3.3 kOhm	1%, 0.25W, MF			
R	45	57.11.3103	10 kOhm	1%, 0.25W, MF			
R	46	57.11.3682	6.8 kOhm	1%, 0.25W, MF			
R	47	00.00.0000		not used			
R	48	00.00.0000		not used			
R	49	57.11.3332	3.3 kOhm	1%, 0.25W, MF			
R	50	57.11.3224	220 kOhm	1%, 0.25W, MF			
R	51	57.11.3103	10 kOhm	1%, 0.25W, MF			
R	52	00.00.0000		not used			
R	53	00.00.0000		not used			
R	54	57.11.3103	10 kOhm	1%, 0.25W, MF			
R	55	57.11.3682	6.8 kOhm	1%, 0.25W, MF			
R	56	57.11.3332	3.3 kOhm	1%, 0.25W, MF			
R	57	57.11.3332	3.3 kOhm	1%, 0.25W, MF			
R	58	57.11.3822	8.2 kOhm	1%, 0.25W, MF			
R	59	00.00.0000		not used			
R	60	57.11.3154	150 kOhm	1%, 0.25W, MF			
R	61	57.11.3124	120 kOhm	1%, 0.25W, MF			
R	62	57.11.3154	150 kOhm	1%, 0.25W, MF			
R	63	57.11.3103	10 kOhm	1%, 0.25W, MF			
R	64	57.11.3222	2.2 kOhm	1%, 0.25W, MF			

SPOOLING MOTOR CONTROL 1.727.340.24

Ad	..POS..	...REF.No...	DESCRIPTION	MANUFACTURER
	R....65	57.11.3102	1 kOhm 1%, 0.25W, MF	
	R....66	57.11.3102	1 kOhm 1%, 0.25W, MF	
	R....67	57.11.3222	2.2 kOhm 1%, 0.25W, MF	
	R....68	57.11.3680	68 Ohm 1%, 0.25W, MF	
	R....69	57.11.3183	18 kOhm 1%, 0.25W, MF	
	R....70	57.11.3100	10 Ohm 1%, 0.25W, MF	
	R....71	57.11.3472	4.7 kOhm 1%, 0.25W, MF	
	R....72	57.11.3104	100 kOhm 1%, 0.25W, MF	
	R....73	57.11.3103	10 kOhm 1%, 0.25W, MF	
	R....74	57.11.3103	10 kOhm 1%, 0.25W, MF	
	R....75	57.11.3103	10 kOhm 1%, 0.25W, MF	
	R....76	57.11.3223	22 kOhm 1%, 0.25W, MF	
	R....77	57.11.3223	22 kOhm 1%, 0.25W, MF	
	R....78	57.11.3273	27 kOhm 1%, 0.25W, MF	
	R....79	57.11.3103	10 kOhm 1%, 0.25W, MF	
	R....80	57.11.3102	1 kOhm 1%, 0.25W, MF	
	R....81	57.11.3472	4.7 kOhm 1%, 0.25W, MF	
	R....82	57.11.3102	1 kOhm 1%, 0.25W, MF	
	R....83	57.11.3472	4.7 kOhm 1%, 0.25W, MF	
	R....84	57.11.3183	18 kOhm 1%, 0.25W, MF	
	R....85	57.11.3680	68 Ohm 1%, 0.25W, MF	
	R....86	57.11.3100	10 Ohm 1%, 0.25W, MF	
	R....87	57.11.3223	22 kOhm 1%, 0.25W, MF	
	R....88	57.11.3105	1 MOhm 1%, 0.25W, MF	
	R....89	57.11.3102	1 kOhm 1%, 0.25W, MF	
	R....90	57.11.3102	1 kOhm 1%, 0.25W, MF	
	R....91	57.11.3105	1 MOhm 1%, 0.25W, MF	
	R....92	57.11.3223	22 kOhm 1%, 0.25W, MF	
	R....93	57.11.3472	4.7 kOhm 1%, 0.25W, MF	
	R....94	57.11.3122	1.2 kOhm 1%, 0.25W, MF	
	R....95	57.56.4102	1 kOhm 5%, 4 W, DR	
	R....96	57.11.3472	4.7 kOhm 1%, 0.25W, MF	
	R....97	57.11.3152	1.5 kOhm 1%, 0.25W, MF	
	R....98	57.11.3152	1.5 kOhm 1%, 0.25W, MF	
	R....99	57.11.3472	4.7 kOhm 1%, 0.25W, MF	
	R...100	57.56.4102	1 kOhm 5%, 4 W, DR	
	R...101	57.11.3103	10 kOhm 1%, 0.25W, MF	
	R...102	57.11.3103	10 kOhm 1%, 0.25W, MF	
	R...103	57.11.3103	10 kOhm 1%, 0.25W, MF	
	R...104	57.11.3103	10 kOhm 1%, 0.25W, MF	
	R...105	57.11.3472	4.7 kOhm 1%, 0.25W, MF	
	R...106	57.11.3103	10 kOhm 1%, 0.25W, MF	
	R...107	57.11.3223	22 kOhm 1%, 0.25W, MF	
	R...108	57.11.3822	8.2 kOhm 1%, 0.25W, MF	
	R...109	57.11.3103	10 kOhm 1%, 0.25W, MF	
	R...110	57.11.3103	10 kOhm 1%, 0.25W, MF	
	R...111	57.11.3103	10 kOhm 1%, 0.25W, MF	
	R...112	57.11.3103	10 kOhm 1%, 0.25W, MF	
	R...113	57.11.3332	3.3 kOhm 1%, 0.25W, MF	
	R...114	57.11.3472	4.7 kOhm 1%, 0.25W, MF	
	R...115	57.11.3222	2.2 kOhm 1%, 0.25W, MF	
	R...116	57.11.3392	3.9 kOhm 1%, 0.25W, MF	
	R...117	57.11.3331	330 Ohm 1%, 0.25W, MF	
	R...118	57.11.3102	1 kOhm 1%, 0.25W, MF	
	R...119	57.11.3332	3.3 kOhm 1%, 0.25W, MF	
	R...120	57.11.3472	4.7 kOhm 1%, 0.25W, MF	
	R...121	57.11.3222	2.2 kOhm 1%, 0.25W, MF	
	R...122	57.11.3392	3.9 kOhm 1%, 0.25W, MF	
	R...123	57.11.3331	330 Ohm 1%, 0.25W, MF	
	R...124	57.11.3102	1 kOhm 1%, 0.25W, MF	
	R...125	57.11.3332	3.3 kOhm 1%, 0.25W, MF	
	R...126	57.11.3472	4.7 kOhm 1%, 0.25W, MF	
	R...127	57.11.3222	2.2 kOhm 1%, 0.25W, MF	
	R...128	57.11.3392	3.9 kOhm 1%, 0.25W, MF	
	R...129	57.11.3331	330 Ohm 1%, 0.25W, MF	
	R...130	57.11.3102	1 kOhm 1%, 0.25W, MF	
	R...131	57.11.3332	3.3 kOhm 1%, 0.25W, MF	
	R...132	57.11.3472	4.7 kOhm 1%, 0.25W, MF	
	R...133	57.11.3222	2.2 kOhm 1%, 0.25W, MF	
	R...134	57.11.3392	3.9 kOhm 1%, 0.25W, MF	
	R...135	57.11.3331	330 Ohm 1%, 0.25W, MF	
	R...136	57.11.3102	1 kOhm 1%, 0.25W, MF	
	R...137	57.11.3332	3.3 kOhm 1%, 0.25W, MF	
	R...138	57.11.3472	4.7 kOhm 1%, 0.25W, MF	
	R...139	57.11.3222	2.2 kOhm 1%, 0.25W, MF	
	R...140	57.11.3392	3.9 kOhm 1%, 0.25W, MF	
	R...141	57.11.3331	330 Ohm 1%, 0.25W, MF	
	R...142	57.11.3102	1 kOhm 1%, 0.25W, MF	
	R...143	57.11.3332	3.3 kOhm 1%, 0.25W, MF	
	R...144	57.11.3472	4.7 kOhm 1%, 0.25W, MF	
	R...145	57.11.3222	2.2 kOhm 1%, 0.25W, MF	
	R...146	57.11.3392	3.9 kOhm 1%, 0.25W, MF	
	R...147	57.11.3331	330 Ohm 1%, 0.25W, MF	
	R...148	57.11.3102	1 kOhm 1%, 0.25W, MF	
	R...149	57.11.3331	330 Ohm 1%, 0.25W, MF	
	R...150	57.11.3103	10 kOhm 1%, 0.25W, MF	
	R...151	57.11.3102	1 kOhm 1%, 0.25W, MF	
	R...152	57.11.3100	10 Ohm 1%, 0.25W, MF	
	R...153	57.11.3100	10 Ohm 1%, 0.25W, MF	
	R...154	57.11.3123	12 kOhm 1%, 0.25W, MF	
	R...155	57.11.3103	10 kOhm 1%, 0.25W, MF	
	R...156	57.11.3103	10 kOhm 1%, 0.25W, MF	
	TP....1	54.02.0320	Test Point	AMP
	TP....2	54.02.0320	Test Point	AMP
	TP....3	54.02.0320	Test Point	AMP
	TP....4	54.02.0320	Test Point	AMP
	TP....5	54.02.0320	Test Point	AMP
	TP....6	54.02.0320	Test Point	AMP
	TP....7	54.02.0320	Test Point	AMP
	W.....1	64.01.0106	Wire Bridge	
	W.....2	64.01.0106	Wire Bridge	
	XIC...1	53.03.0166	8 Pole IC Socket	
	XIC...2	53.03.0168	16 Pole IC Socket	
	XIC...3	53.03.0166	8 Pole IC Socket	
	XIC...4	53.03.0167	14 Pole IC Socket	
	XIC...5	53.03.0166	8 Pole IC Socket	
	XIC...6	53.03.0168	16 Pole IC Socket	
	XIC...7	53.03.0168	16 Pole IC Socket	
	XIC...8	53.03.0168	16 Pole IC Socket	
	XIC...9	53.03.0166	8 Pole IC Socket	
	XIC..10	53.03.0166	8 Pole IC Socket	
	XIC..11	53.03.0166	8 Pole IC Socket	
	XIC..12	53.03.0167	14 Pole IC Socket	
	XIC..13	53.03.0166	8 Pole IC Socket	
	XIC..14	53.03.0166	8 Pole IC Socket	
	XIC..15	53.03.0168	16 Pole IC Socket	
	XIC..16	53.03.0168	16 Pole IC Socket	
	XIC..17	53.03.0166	8 Pole IC Socket	
	XIC..18	53.03.0168	16 Pole IC Socket	

Note 1: Q15, 19, 23, 27, 31, 35,
respective
Q17, 21, 25, 29, 33 and 37
must be the same type from the same manufacturer.

EL=Electrolytic, PETP=Polyester, PP=Polypropylen, SI=Silicon ,
MF=Metal Film, PMG=Cermet, CER=Ceramic, SAL=Solid Aluminium
MANUFACTURER: AMP=AMP, Ph=Philips, St=Studer

1.727.340.24 SPOOLING MOTOR CTL. BOARD GP 92/07/2400

END

TAPE TENSION ADJUST BOARD 1.727.341.00

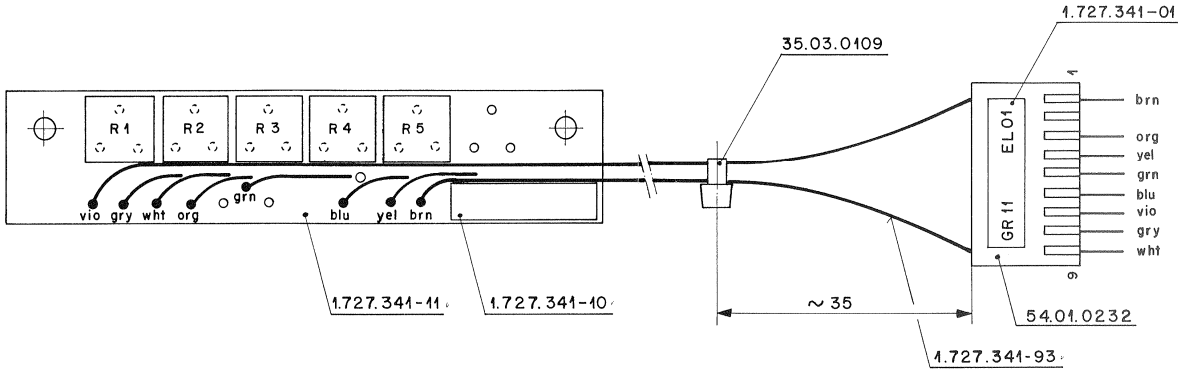

IND.	POS.NO.	PART NO.	VALUE	SPECIFICATIONS / EQUIVALENT	MANUF.
	MP....1	1.727.341.11	1 pce	Tape Tension Adj. PCB	St
	MP....2	1.727.341.93	1 pce	L-LST Tape Tension Adj.	St
	MP....3	54.01.0232	1 pce	CIS Case, 9 Pol	
	MP....4	1.727.341.10	1 pce	No. label	St
	R.....1	58.01.8103	10 kOhm	Potmeter PMG	
	R.....2	58.01.8103	10 kOhm	Potmeter PMG	
	R.....3	58.01.8103	10 kOhm	Potmeter PMG	
	R.....4	58.01.8103	10 kOhm	Potmeter PMG	
	R.....5	58.01.8103	10 kOhm	Potmeter PMG	
	R.....6			not used	

MANUFACTURER: St=Studer

ORIG 86/08/08

S T U D E R (00) 86/08/08 Wth TAPE TENSION ADJ. BOARD PL 1.727.341.00 PAGE 1

SHUTTLE CONTROL 1.727.180.00

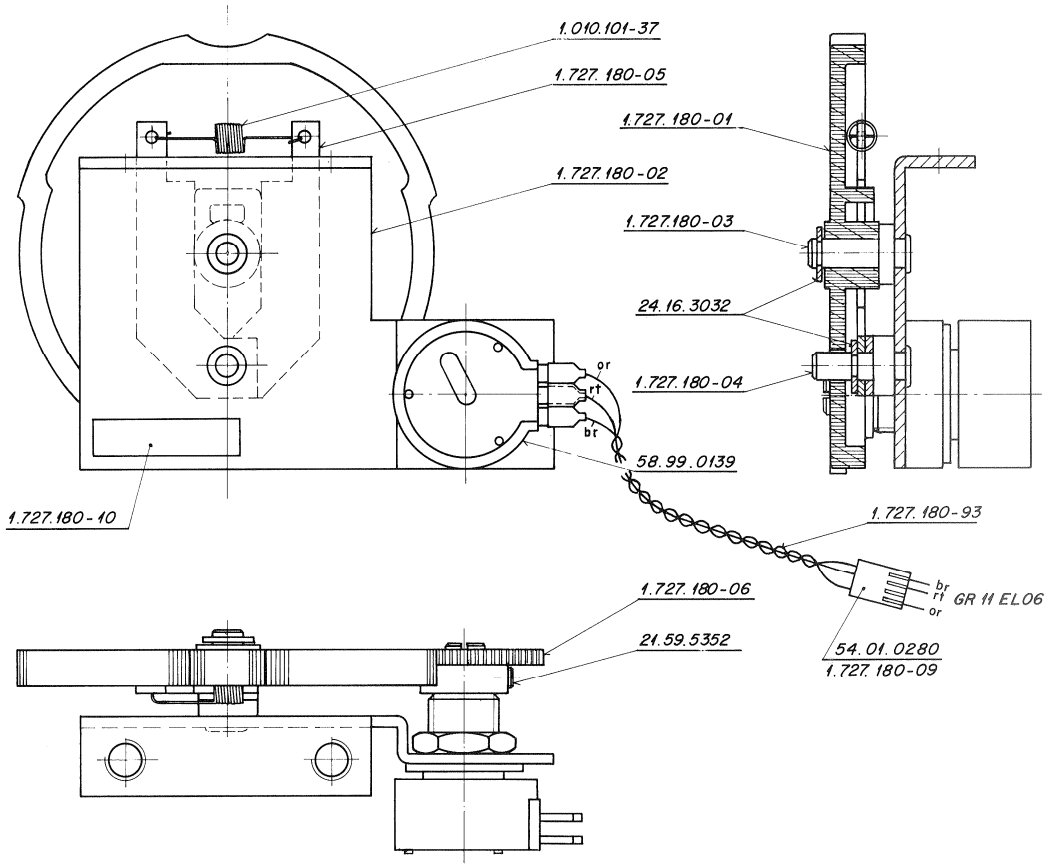

BLOCK DIAGRAM CAPSTAN SERVO SYSTEM

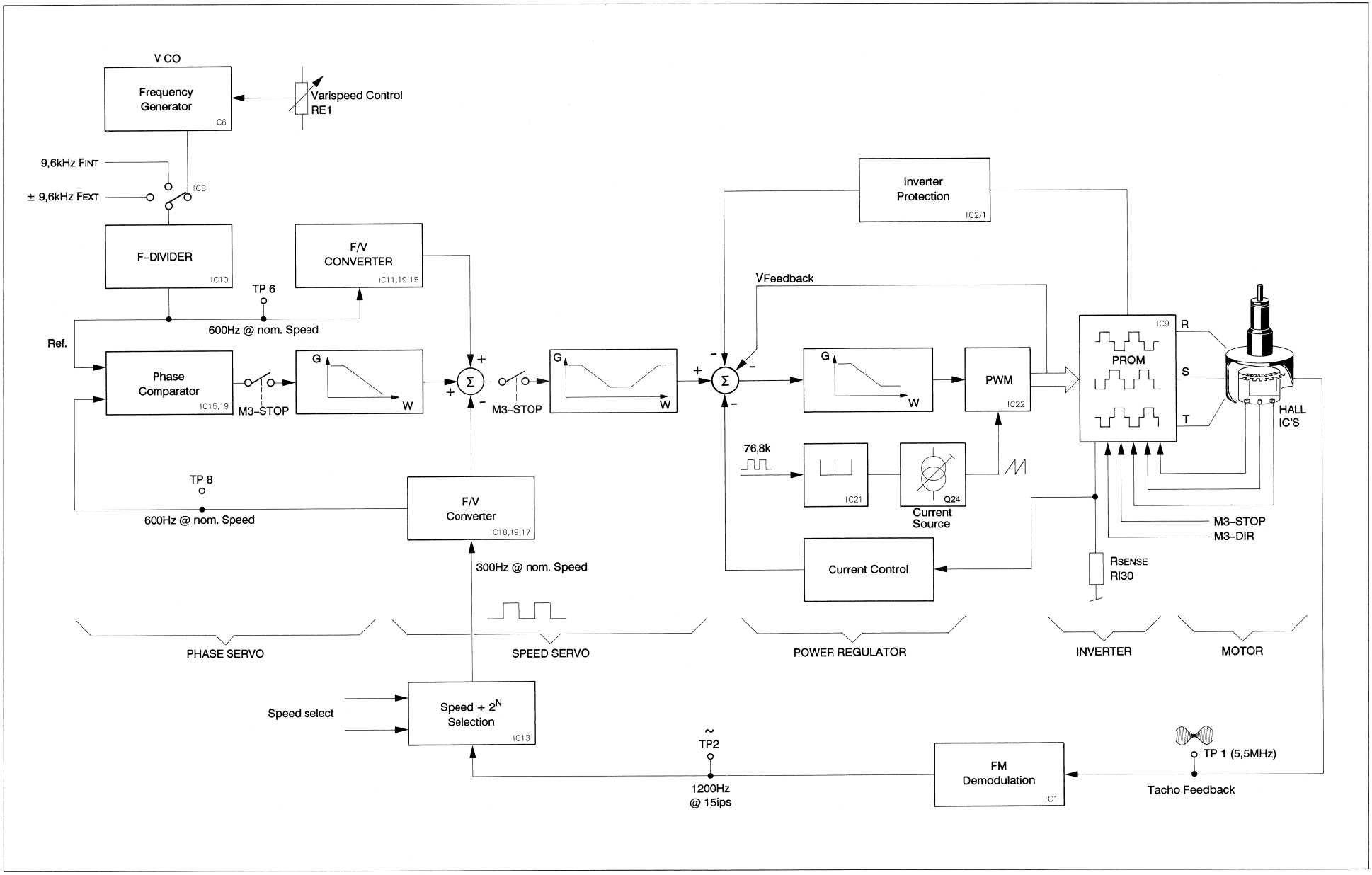

CAPSTAN MOTOR CONTROL FOR ALL SPEEDS 1.727.336.20

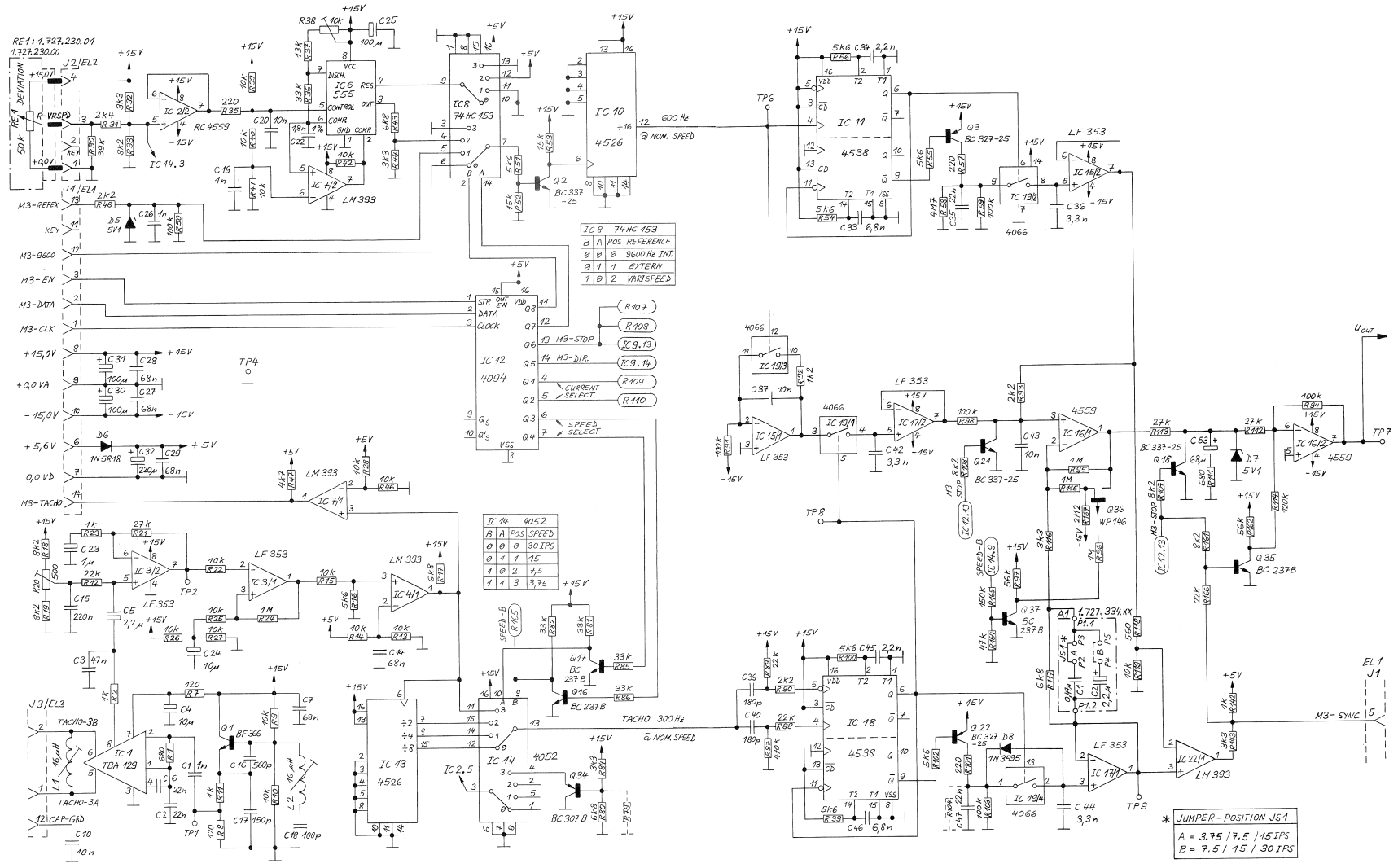

0 15.10.91 GP	1 . .	. .	. .	. .
	A 807 GR 20			PAGE 1 OF 3
STUDER	CAPSTAN MOTOR CONTROL		SC	1.727.336.20

0 15.10.91 GP	1 . .	. .	. .	. .
	A 807 GR 20			PAGE 2 OF 3
STUDER	CAPSTAN MOTOR CONTROL		SC	1.727.336.20

CAPSTAN MOTOR CONTROL FOR ALL SPEEDS 1.727.336.20

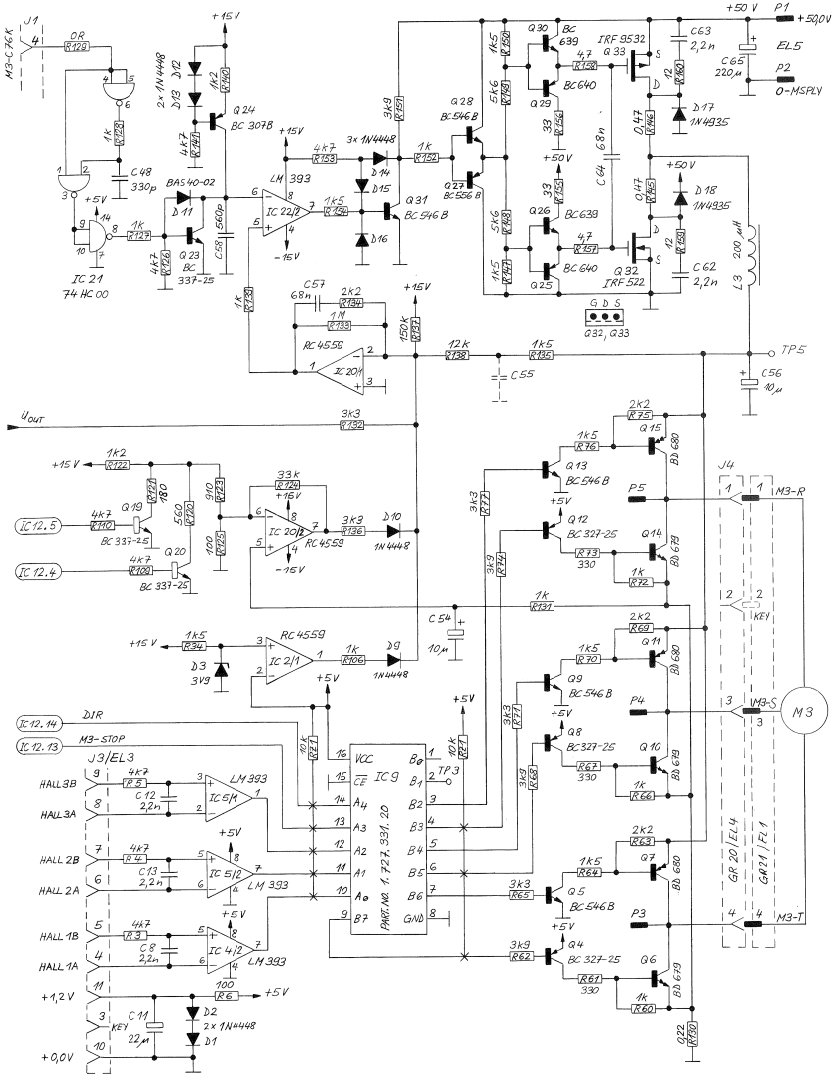

CAPSTAN MOTOR CONTROL FOR ALL SPEEDS 1.727.336.20

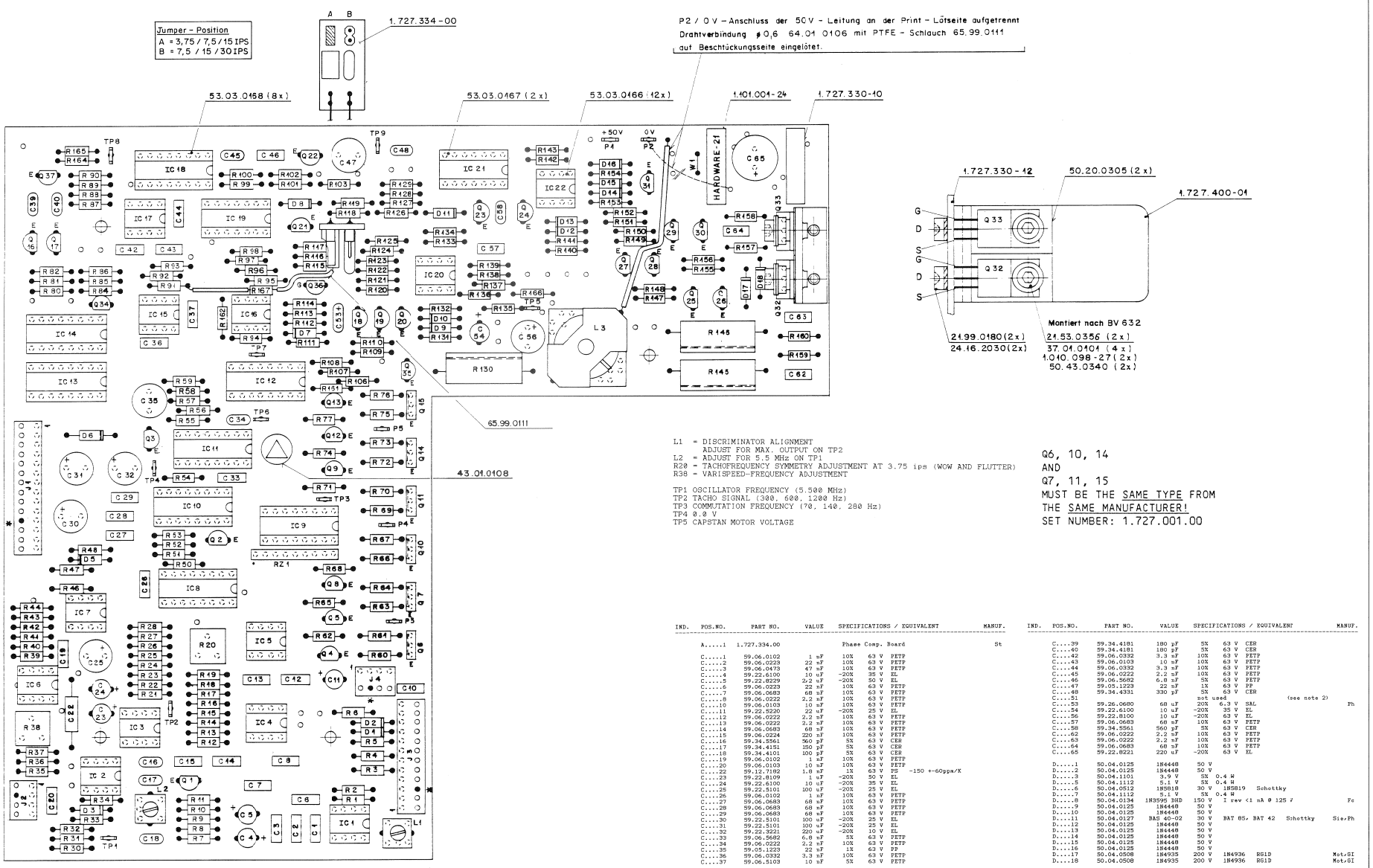

L1 = DISCRIMINATOR ALIGNMENT
ADJUST FOR MAX. OUTPUT ON TP2
L2 = ADJUST FOR 5.5 MHz ON TP1
R20 = TACHOFREQUENCY SYMMETRY ADJUSTMENT AT 3.75 ips (WOW AND FLUTTER)
R38 = VARISPEED-FREQUENCY ADJUSTMENT

TP1 OSCILLATOR FREQUENCY (5.500 MHz)
TP2 TACHO SIGNAL (300, 600, 1200 Hz)
TP3 COMMUTATION FREQUENCY (70, 140, 280 Hz)
TP4 0.0 V
TP5 CAPSTAN MOTOR VOLTAGE

Q6, 10, 14
AND
Q7, 11, 15
MUST BE THE SAME TYPE FROM
THE SAME MANUFACTURER!
SET NUMBER: 1.727.001.00

IND.	POS.NO.	PART NO.	VALUE	SPECIFICATIONS / EQUIVALENT	MANUF.
	A.....1	1.727.334.00		Phase Comp. Board	St
	C.....1	59.06.0102	1 nF	10% 63 V PETP	
	C.....2	59.06.0223	22 nF	10% 63 V PETP	
	C.....3	59.06.0473	47 nF	10% 63 V PETP	
	C.....4	59.22.6100	10 uF	-20% 35 V EL	
	C.....5	59.22.8229	2,2 uF	-20% 50 V EL	
	C.....6	59.06.0223	22 nF	10% 63 V PETP	
	C.....7	59.06.0683	68 nF	10% 63 V PETP	
	C.....8	59.06.0222	2,2 nF	10% 63 V PETP	
	C.....10	59.06.0103	10 nF	10% 63 V PETP	
	C.....11	59.22.5220	22 uF	-20% 25 V EL	
	C.....12	59.06.0222	2,2 nF	10% 63 V PETP	
	C.....13	59.06.0222	2,2 nF	10% 63 V PETP	
	C.....14	59.06.0683	68 nF	10% 63 V PETP	
	C.....15	59.06.0224	220 nF	10% 63 V PETP	
	C.....16	59.34.5561	560 pF	5% 63 V CER	
	C.....17	59.34.4151	150 pF	5% 63 V CER	
	C.....18	59.34.4101	100 pF	5% 63 V CER	
	C.....19	59.06.0102	1 nF	10% 63 V PETP	
	C.....20	59.06.0103	10 nF	10% 63 V PETP	
	C.....22	59.12.7182	1.8 nF	1% 63 V PS -150 +-60ppm/K	
	C.....23	59.22.8109	1 uF	-20% 50 V EL	
	C.....24	59.22.6100	10 uF	-20% 35 V EL	
	C.....25	59.22.5101	100 uF	-20% 25 V EL	
	C.....26	59.06.0102	1 nF	10% 63 V PETP	
	C.....27	59.06.0683	68 nF	10% 63 V PETP	
	C.....28	59.06.0683	68 nF	10% 63 V PETP	
	C.....29	59.06.0683	68 nF	10% 63 V PETP	
	C.....30	59.22.5101	100 uF	-20% 25 V EL	
	C.....31	59.22.5101	100 uF	-20% 25 V EL	
	C.....32	59.22.3221	220 uF	-20% 10 V EL	
	C.....33	59.06.5682	6.8 nF	5% 63 V PETP	
	C.....34	59.06.0222	2,2 nF	10% 63 V PETP	
	C.....35	59.05.1223	22 nF	1% 63 V PP	
	C.....36	59.06.0332	3,3 nF	10% 63 V PETP	
	C.....37	59.06.5103	10 nF	5% 63 V PETP	

IND.	POS.NO.	PART NO.	VALUE	SPECIFICATIONS / EQUIVALENT	MANUF.
	C.....39	59.34.4181	180 pF	5% 63 V CER	
	C.....40	59.34.4181	180 pF	5% 63 V CER	
	C.....42	59.06.0332	3,3 nF	10% 63 V PETP	
	C.....43	59.06.0103	10 nF	10% 63 V PETP	
	C.....44	59.06.0332	3,3 nF	10% 63 V PETP	
	C.....45	59.06.0222	2,2 nF	10% 63 V PETP	
	C.....46	59.06.5682	6,8 nF	5% 63 V PETP	
	C.....47	59.05.1223	22 nF	1% 63 V PP	
	C.....48	59.34.4331	330 pF	5% 63 V CER	
	C.....51			not used (see note 2)	
	C.....53	59.26.0680	68 uF	20% 6.3 V SAL	Ph
	C.....54	59.22.6100	10 uF	-20% 35 V EL	
	C.....56	59.22.8100	10 uF	-20% 63 V EL	
	C.....57	59.06.0683	68 nF	10% 63 V PETP	
	C.....58	59.34.5561	560 pF	5% 63 V CER	
	C.....62	59.06.0222	2,2 nF	10% 63 V PETP	
	C.....63	59.06.0222	2,2 nF	10% 63 V PETP	
	C.....64	59.06.0683	68 nF	10% 63 V PETP	
	C.....65	59.22.8221	220 uF	-20% 63 V EL	
	D.....1	50.04.0125	1N4448	50 V	
	D.....2	50.04.0125	1N4448	50 V	
	D.....3	50.04.1101	3.9 V	5% 0.4 W	
	D.....5	50.04.1112	5.1 V	5% 0.4 W	
	D.....6	50.04.0512	1N5819	30 V 1N5819 Schottky	
	D.....7	50.04.1112	5.1 V	5% 0.4 W	
	D.....8	50.04.0134	1N3595 DHD	150 V I rev <1 nA @ 125 / Fc	
	D.....9	50.04.0125	1N4448	50 V	
	D....10	50.04.0125	1N4448	50 V	
	D....11	50.04.0127	BAS 40-02	30 V BAT 85, BAT 42 Schottky Sie/Ph	
	D....12	50.04.0125	1N4448	50 V	
	D....13	50.04.0125	1N4448	50 V	
	D....14	50.04.0125	1N4448	50 V	
	D....15	50.04.0125	1N4448	50 V	
	D....16	50.04.0125	1N4448	50 V	
	D....17	50.04.0508	1N4935	200 V 1N4936 RG1D Mot/SI	
	D....18	50.04.0508	1N4935	200 V 1N4936 RG1D Mot/SI	

CAPSTAN MOTOR CONTROL FOR ALL SPEEDS 1.727.336.20

IND.	POS.NO.	PART NO.	VALUE	SPECIFICATIONS / EQUIVALENT	MANUF.
	IC....1	50.11.0137	TBA 129	FM-ZF-Amp.-Discriminator	Ph
	IC....2	50.09.0107	RC 4559	uPC 4559 Dual Op.Amp.	Ra,NEC
	IC....3	50.09.0101	LF 353 N	TL 072 CP Dual Op.Amp. Bi-JFET	NS,TI
	IC....4	50.05.0283	LM 393 N	LM 393 P Dual Comp.	NS,TI
	IC....5	50.05.0283	LM 393 N	LM 393 P Dual Comp.	NS,TI
	IC....6	50.05.0158	NE 555 N	LM 555 CN	Sig,NS
	IC....7	50.05.0283	LM 393 N	LM 393 P Dual Comp	NS,TI
	IC....8	50.17.1153	74 HC 153		
	IC....9	50.05.0206		Capstan motor comm. Ctl. 1.727.331.20	St
	IC....10	50.07.0526	..4526..		
	IC....11	50.07.0538	..4538..		Ph,Mot
	IC....12	50.07.0018	..4094..		
	IC....13	50.07.0526	..4526..		
	IC....14	50.07.0024	..4052..		
	IC....15	50.09.0101	LF 353 N	TL 072 CP Dual Op.Amp. Bi-JFET	NS,TI
	IC....16	50.09.0107	RC 4559	uPC 4559 Dual Op.Amp. Bi-JFET	Ra,NEC
	IC....17	50.09.0101	LF 353 N	TL 072 CP Dual Op.Amp. Bi-JFET	NS,TI
	IC....18	50.07.0538	..4538..		Ph,Mot
	IC....19	50.07.0066	..4066..		
	IC....20	50.09.0107	RC 4559	uPC 4559 Dual Op.Amp.	Ra,NEC
	IC....21	50.17.1000	74 HC 00		
	IC....22	50.05.0283	LM 393 N	LM 393 P Dual Comp.	NS,TI
	J....1	54.01.0293	14 Pole	CIS socket strip	AMP
	J....2	54.01.0241	4 Pole	CIS socket strip	AMP
	J....3	54.01.0215	12 Pole	CIS socket strip	AMP
	J....4	54.01.0241	4 Pole	CIS socket strip	AMP
	L....1	1.022.222.00	16 uH	HF-Coil	St
	L....2	1.022.222.00	16 uH	HF-Coil	St
	L....3	1.022.251.00	196 uH	Filter Coil	St
	MP....1	1.727.330.12	1 pce	PC Board	St
	MP....2	1.727.400.01	1 pce	Heatsink	St
	MP....3	21.99.0180	2 pce	M3 * 5 Cross recessed oval head screw	
	MP....4	21.53.0355	2 pce	M3 * 8 hexagon socket head cap screw	
	MP....5	24.16.2030	2 pce	Serrat lock washer B3.2/6.0	

IND.	POS.NO.	PART NO.	VALUE	SPECIFICATIONS / EQUIVALENT	MANUF.
	R....1	57.11.3102	1 kOhm	1%, 0.25W, MF	
	R....2	57.11.3102	1 kOhm	1%, 0.25W, MF	
	R....3	57.11.3472	4.7 kOhm	1%, 0.25W, MF	
	R....4	57.11.3472	4.7 kOhm	1%, 0.25W, MF	
	R....5	57.11.3472	4.7 kOhm	1%, 0.25W, MF	
	R....6	57.11.3101	100 Ohm	1%, 0.25W, MF	
	R....7	57.11.3121	120 Ohm	1%, 0.25W, MF	
	R....8	57.11.3121	120 Ohm	1%, 0.25W, MF	
	R....9	57.11.3103	10 kOhm	1%, 0.25W, MF	
	R....10	57.11.3103	10 kOhm	1%, 0.25W, MF	
	R....11	57.11.3102	1 kOhm	1%, 0.25W, MF	
	R....12	57.11.3223	22 kOhm	1%, 0.25W, MF	
	R....13	57.11.3103	10 kOhm	1%, 0.25W, MF	
	R....14	57.11.3103	10 kOhm	1%, 0.25W, MF	
	R....15	57.11.3103	10 kOhm	1%, 0.25W, MF	
	R....16	57.11.3562	5.6 kOhm	1%, 0.25W, MF	
	R....17	57.11.3682	6.8 kOhm	1%, 0.25W, MF	
	R....18	57.11.3822	8.2 kOhm	1%, 0.25W, MF	
	R....19	57.11.3822	8.2 kOhm	1%, 0.25W, MF	
	R....20	58.01.8501	500 Ohm	10%, 0.5 W, CERMET, lin. Trimmpot.	
	R....21	57.11.3273	27 kOhm	1%, 0.25W, MF	

IND.	POS.NO.	PART NO.	VALUE	SPECIFICATIONS / EQUIVALENT	MANUF.
	MP....6	37.01.0101	4 pce	Disc spring D3.2/8.0 * 0.3	
	MP....7	50.20.0404	2 pce	Insulating pass through D6.0/3.5	
	MP....8	1.010.098.27	2 pce	Distance socket D3.1/7.0 * 2.3	St
	MP....9	50.20.0305	2 pce	Greased insulation for TO 220	
	MP....10	1.727.336.10	1 pce	No. label	St
	MP....11	1.727.331.01	1 pce	No. label 5 * 17	St
	MP....12	43.01.0108	1 pce	ESE label	
	MP....13	1.101.001.20	1 pce	Hardware label -20	St
	P....1	54.02.0320	1 Pole	Tab	
	P....2	54.02.0320	1 Pole	Tab	
	P....3	54.02.0320	1 Pole	Tab	
	P....4	54.02.0320	1 Pole	Tab	
	P....5	54.02.0320	1 Pole	Tab	
	Q....1	50.03.0577	BF 496	NPN	Mot
	Q....2	50.03.0340	BC 337-25	NPN	
	Q....3	50.03.0351	BC 327-25	PNP	
	Q....4	50.03.0351	BC 327-25	PNP	
	Q....5	50.03.0491	BC 546 B	NPN	
	Q....6	50.03.0749	BD 679	Darl. NPN (see note 1)	Ph,SGS
	Q....7	50.03.0799	BD 680	Darl. PNP (see note 1)	Ph,SGS
	Q....8	50.03.0351	BC 327-25	PNP	
	Q....9	50.03.0491	BC 546 B	NPN	
	Q....10	50.03.0749	BD 679	Darl. NPN (see note 1)	Ph,SGS
	Q....11	50.03.0799	BD 680	Darl. PNP (see note 1)	Ph,SGS
	Q....12	50.03.0351	BC 327-25	PNP	
	Q....13	50.03.0491	BC 546 B	NPN	
	Q....14	50.03.0749	BD 679	Darl. NPN (see note 1)	Ph,SGS
	Q....15	50.03.0799	BD 680	Darl. PNP (see note 1)	Ph,SGS
	Q....16	50.03.0436	BC 237 B	BC 547 B BC 550 B NPN	
	Q....17	50.03.0436	BC 237 B	BC 547 B BC 550 B NPN	
	Q....18	50.03.0340	BC 337-25	NPN	
	Q....19	50.03.0340	BC 337-25	NPN	
	Q....20	50.03.0340	BC 337-25	NPN	
	Q....21	50.03.0340	BC 337-25	NPN	
	Q....22	50.03.0351	BC 327-25	PNP	

IND.	POS.NO.	PART NO.	VALUE	SPECIFICATIONS / EQUIVALENT	MANUF.
	Q....23	50.03.0340	BC 337-25	NPN	
	Q....24	50.03.0515	BC 307 B	BC 557 B BC 560 B PNP	
	Q....25	50.03.0626	BC 640	PNP	
	Q....26	50.03.0551	BC 639	NPN	
	Q....27	50.03.0492	BC 556 B	PNP	
	Q....28	50.03.0491	BC 546 B	NPN	
	Q....29	50.03.0626	BC 640	PNP	
	Q....30	50.03.0551	BC 639	NPN	
	Q....31	50.03.0491	BC 546 B	NPN	
	Q....32	50.03.1502	IRF 522	MTP 8N10 Power FET N-Channel	IR,Mot
	Q....33	50.03.1552	IRF 9532	MTP 8P10 Power FET P-Channel	IR,Mot
	Q....34	50.03.0515	BC 307 B	BC 557 B BC 560 B PNP	
	Q....35	50.03.0436	BC 237 B	BC 547 B BC 550 B NPN	
	Q....36	50.03.0329	WF 146	p-ch FET	
	Q....37	50.03.0436	BC 237 B	BC 547 B BC 550 B NPN	
	R....1	57.11.3681	680 Ohm	1%, 0.25W, MF	
	R....2	57.11.3102	1 kOhm	1%, 0.25W, MF	
	R....3	57.11.3472	4.7 kOhm	1%, 0.25W, MF	
	R....4	57.11.3472	4.7 kOhm	1%, 0.25W, MF	
	R....5	57.11.3472	4.7 kOhm	1%, 0.25W, MF	
	R....6	57.11.3101	100 Ohm	1%, 0.25W, MF	
	R....7	57.11.3121	120 Ohm	1%, 0.25W, MF	
	R....8	57.11.3121	120 Ohm	1%, 0.25W, MF	
	R....9	57.11.3103	10 kOhm	1%, 0.25W, MF	
	R....10	57.11.3103	10 kOhm	1%, 0.25W, MF	
	R....11	57.11.3102	1 kOhm	1%, 0.25W, MF	
	R....12	57.11.3223	22 kOhm	1%, 0.25W, MF	
	R....13	57.11.3103	10 kOhm	1%, 0.25W, MF	
	R....14	57.11.3103	10 kOhm	1%, 0.25W, MF	
	R....15	57.11.3103	10 kOhm	1%, 0.25W, MF	
	R....16	57.11.3562	5.6 kOhm	1%, 0.25W, MF	
	R....17	57.11.3682	6.8 kOhm	1%, 0.25W, MF	
	R....18	57.11.3822	8.2 kOhm	1%, 0.25W, MF	
	R....19	57.11.3822	8.2 kOhm	1%, 0.25W, MF	
	R....20	58.01.8501	500 Ohm	10%, 0.5 W, CERMET, lin. Trimmpot.	
	R....21	57.11.3273	27 kOhm	1%, 0.25W, MF	

IND.	POS.NO.	PART NO.	VALUE	SPECIFICATIONS / EQUIVALENT	MANUF.
	R....22	57.11.3103	10 kOhm	1%, 0.25W, MF	
	R....23	57.11.3102	1 kOhm	1%, 0.25W, MF	
	R....24	57.11.3105	1 MOhm	1%, 0.25W, MF	
	R....25	57.11.3103	10 kOhm	1%, 0.25W, MF	
	R....26	57.11.3103	10 kOhm	1%, 0.25W, MF	
	R....27	57.11.3103	10 kOhm	1%, 0.25W, MF	
	R....28	57.11.3103	10 kOhm	1%, 0.25W, MF	
	R....30	57.11.3393	39 kOhm	1%, 0.25W, MF	
	R....31	57.11.3242	2.4 kOhm	1%, 0.25W, MF	
	R....32	57.11.3332	3.3 kOhm	1%, 0.25W, MF	
	R....33	57.11.3822	8.2 kOhm	1%, 0.25W, MF	
	R....34	57.11.3152	1.5 kOhm	1%, 0.25W, MF	
	R....35	57.11.3221	220 Ohm	1%, 0.25W, MF	
	R....36	57.11.3333	33 kOhm	1%, 0.25W, MF	
	R....37	57.11.3133	13 kOhm	1%, 0.25W, MF	
	R....38	58.01.8103	10 kOhm	10%, 0.5 W, CERMET, lin. Trimmpot.	
	R....39	57.11.3103	10 kOhm	1%, 0.25W, MF	
	R....40	57.11.3103	10 kOhm	1%, 0.25W, MF	
	R....41	57.11.3103	10 kOhm	1%, 0.25W, MF	
	R....42	57.11.3103	10 kOhm	1%, 0.25W, MF	
	R....43	57.11.3682	6.8 kOhm	1%, 0.25W, MF	
	R....44	57.11.3332	3.3 kOhm	1%, 0.25W, MF	
	R....46	57.11.3103	10 kOhm	1%, 0.25W, MF	
	R....47	57.11.3472	4.7 kOhm	1%, 0.25W, MF	
	R....48	57.11.3222	2.2 kOhm	1%, 0.25W, MF	
	R....50	57.11.3104	100 kOhm	1%, 0.25W, MF	
	R....51	57.11.3562	5.6 kOhm	1%, 0.25W, MF	
	R....52	57.11.3153	15 kOhm	1%, 0.25W, MF	
	R....53	57.11.3153	15 kOhm	1%, 0.25W, MF	
	R....54	57.11.3562	5.6 kOhm	1%, 0.25W, MF	
	R....55	57.11.3562	5.6 kOhm	1%, 0.25W, MF	
	R....56	57.11.3562	5.6 kOhm	1%, 0.25W, MF	
	R....57	57.11.3221	220 Ohm	1%, 0.25W, MF	
	R....58	57.11.5475	4.7 MOhm	5%, 0.25W, MF	
	R....59	57.11.3104	100 kOhm	1%, 0.25W, MF	
	R....60	57.11.3102	1 kOhm	1%, 0.25W, MF	
	R....61	57.11.3331	330 Ohm	1%, 0.25W, MF	

IND.	POS.NO.	PART NO.	VALUE	SPECIFICATIONS / EQUIVALENT	MANUF.
	R....62	57.11.3392	3.9 kOhm	1%, 0.25W, MF	
	R....63	57.11.3222	2.2 kOhm	1%, 0.25W, MF	
	R....64	57.11.3152	1.5 kOhm	1%, 0.25W, MF	
	R....65	57.11.3332	3.3 kOhm	1%, 0.25W, MF	
	R....66	57.11.3102	1 kOhm	1%, 0.25W, MF	
	R....67	57.11.3331	330 Ohm	1%, 0.25W, MF	
	R....68	57.11.3392	3.9 kOhm	1%, 0.25W, MF	
	R....69	57.11.3222	2.2 kOhm	1%, 0.25W, MF	
	R....70	57.11.3152	1.5 kOhm	1%, 0.25W, MF	
	R....71	57.11.3332	3.3 kOhm	1%, 0.25W, MF	
	R....72	57.11.3102	1 kOhm	1%, 0.25W, MF	
	R....73	57.11.3331	330 Ohm	1%, 0.25W, MF	
	R....74	57.11.3392	3.9 kOhm	1%, 0.25W, MF	
	R....75	57.11.3222	2.2 kOhm	1%, 0.25W, MF	
	R....76	57.11.3152	1.5 kOhm	1%, 0.25W, MF	
	R....77	57.11.3332	3.3 kOhm	1%, 0.25W, MF	
	R....80	57.11.3682	6.8 kOhm	1%, 0.25W, MF	
	R....81	57.11.3333	33 kOhm	1%, 0.25W, MF	
	R....82	57.11.3333	33 kOhm	1%, 0.25W, MF	
	R....84	57.11.3332	3.3 kOhm	1%, 0.25W, MF	
	R....85	57.11.3333	33 kOhm	1%, 0.25W, MF	
	R....86	57.11.3333	33 kOhm	1%, 0.25W, MF	
	R....87	57.11.3474	470 kOhm	1%, 0.25W, MF	
	R....88	57.11.3223	22 kOhm	1%, 0.25W, MF	
	R....89	57.11.3223	22 kOhm	1%, 0.25W, MF	
	R....90	57.11.3222	2.2 kOhm	1%, 0.25W, MF	
	R....91	57.11.3104	100 kOhm	1%, 0.25W, MF	
	R....92	57.11.3122	1.2 kOhm	1%, 0.25W, MF	
	R....93	57.11.3222	2.2 kOhm	1%, 0.25W, MF	
	R....94	57.11.3104	100 kOhm	1%, 0.25W, MF	
	R....95	57.11.3105	1 MOhm	1%, 0.25W, MF	
	R....96	57.11.3105	1 MOhm	1%, 0.25W, MF	
	R....97	57.11.3563	56 kOhm	1%, 0.25W, MF	
	R....98	57.11.3104	100 kOhm	1%, 0.25W, MF	
	R....99	57.11.3562	5.6 kOhm	1%, 0.25W, MF	
	R....100	57.11.3562	5.6 kOhm	1%, 0.25W, MF	
	R....101	57.11.3221	220 Ohm	1%, 0.25W, MF	

IND.	POS.NO.	PART NO.	VALUE	SPECIFICATIONS / EQUIVALENT	MANUF.
	R....102	57.11.3562	5.6 kOhm	1%, 0.25W, MF	
	R....103	57.11.3104	100 kOhm	1%, 0.25W, MF	
	R....106	57.11.3102	1 kOhm	1%, 0.25W, MF	
	R....107	57.11.3822	8.2 kOhm	1%, 0.25W, MF	
	R....108	57.11.3822	8.2 kOhm	1%, 0.25W, MF	
	R....109	57.11.3472	4.7 kOhm	1%, 0.25W, MF	
	R....110	57.11.3472	4.7 kOhm	1%, 0.25W, MF	
	R....111	57.11.3681	680 Ohm	1%, 0.25W, MF	
	R....112	57.11.3273	27 kOhm	1%, 0.25W, MF	
	R....113	57.11.3273	27 kOhm	1%, 0.25W, MF	
	R....114	57.11.3124	120 kOhm	1%, 0.25W, MF	
	R....115	57.11.3105	1 MOhm	1%, 0.25W, MF	
	R....116	57.11.3332	3.3 kOhm	1%, 0.25W, MF	
	R....117	57.11.3682	6.8 kOhm	1%, 0.25W, MF	
	R....118	57.11.3561	560 Ohm	1%, 0.25W, MF	
	R....119	57.11.3103	10 kOhm	1%, 0.25W, MF	
	R....120	57.11.3561	560 Ohm	1%, 0.25W, MF	
	R....121	57.11.3181	180 Ohm	1%, 0.25W, MF	
	R....122	57.11.3122	1.2 kOhm	1%, 0.25W, MF	
	R....123	57.11.3911	910 Ohm	1%, 0.25W, MF	
	R....124	57.11.3393	39 kOhm	1%, 0.25W, MF	
	R....125	57.11.3101	100 Ohm	1%, 0.25W, MF	
	R....126	57.11.3472	4.7 kOhm	1%, 0.25W, MF	
	R....127	57.11.3102	1 kOhm	1%, 0.25W, MF	
	R....128	57.11.3102	1 kOhm	1%, 0.25W, MF	
	R....129	57.11.4000	0 Ohm		
	R....130	57.56.5228	0.22 Ohm	5%, 4.0 W, Wire	
	R....131	57.11.3102	1 kOhm	1%, 0.25W, MF	
	R....132	57.11.3332	3.3 kOhm	1%, 0.25W, MF	
	R....133	57.11.3105	1 MOhm	1%, 0.25W, MF	
	R....134	57.11.3222	2.2 kOhm	1%, 0.25W, MF	
	R....135	57.11.3152	1.5 kOhm	1%, 0.25W, MF	
	R....136	57.11.3332	3.3 kOhm	1%, 0.25W, MF	
	R....137	57.11.3154	150 kOhm	1%, 0.25W, MF	
	R....138	57.11.3123	12 kOhm	1%, 0.25W, MF	
	R....139	57.11.3102	1 kOhm	1%, 0.25W, MF	
	R....140	57.11.3122	1.2 kOhm	1%, 0.25W, MF	

IND.	POS.NO.	PART NO.	VALUE	SPECIFICATIONS / EQUIVALENT	MANUF.
	R....141	57.11.3472	4.7 kOhm	1%, 0.25W, MF	
	R....142	57.11.3102	1 kOhm	1%, 0.25W, MF	
	R....143	57.11.3332	3.3 kOhm	1%, 0.25W, MF	
	R....145	57.56.5478	0.47 Ohm	10%, 4.0 W, Wire	
	R....146	57.56.5478	0.47 Ohm	10%, 4.0 W, Wire	
	R....147	57.11.3152	1.5 kOhm	1%, 0.25W, MF	
	R....148	57.11.3562	5.6 kOhm	1%, 0.25W, MF	
	R....149	57.11.3562	5.6 kOhm	1%, 0.25W, MF	
	R....150	57.11.3152	1.5 kOhm	1%, 0.25W, MF	
	R....151	57.11.3392	3.9 kOhm	1%, 0.25W, MF	
	R....152	57.11.3102	1 kOhm	1%, 0.25W, MF	
	R....153	57.11.3472	4.7 kOhm	1%, 0.25W, MF	
	R....154	57.11.3152	1.5 kOhm	1%, 0.25W, MF	
	R....155	57.19.0330	33 Ohm	5%, 0.33W, /!\ fusible resistor	
	R....156	57.19.0330	33 Ohm	5%, 0.33W, /!\ fusible resistor	
	R....157	57.19.0479	4.7 Ohm	5%, 0.33W, /!\ fusible resistor	
	R....158	57.19.0479	4.7 Ohm	5%, 0.33W, /!\ fusible resistor	
	R....159	57.11.3120	12 Ohm	1%, 0.25W, MF	
	R....160	57.11.3120	12 Ohm	1%, 0.25W, MF	
	R....161	57.11.3822	8.2 kOhm	1%, 0.25W, MF	
	R....162	57.11.3563	56 kOhm	1%, 0.25W, MF	
	R....164	57.11.3473	47 kOhm	1%, 0.25W, MF	
	R....165	57.11.3154	150 kOhm	1%, 0.25W, MF	
	R....166	57.11.3223	22 kOhm	1%, 0.25W, MF	
	R....167	57.11.5225	2.2 MOhm	5%, 0.25W, MF	
	RZ....1	57.88.4103	8*10 kOhm	5%, Single Line	
	TP....1	54.02.0320	1 Pole	Tab	
	TP....2	54.02.0320	1 Pole	Tab	
	TP....3	54.02.0320	1 Pole	Tab	
	TP....4	54.02.0320	1 Pole	Tab	
	TP....5	54.02.0320	1 Pole	Tab	
	TP....6	54.02.0320	1 Pole	Tab	
	TP....7	54.02.0320	1 Pole	Tab	
	TP....8	54.02.0320	1 Pole	Tab	
	TP....9	54.02.0320	1 Pole	Tab	

IND.	POS.NO.	PART NO.	VALUE	SPECIFICATIONS / EQUIVALENT	MANUF.
	W....1	1.010.321.64		Wire Bridge	
	XIC...1	53.03.0166	8 Pole	IC socket	
	XIC...2	53.03.0166	8 Pole	IC socket	
	XIC...3	53.03.0166	8 Pole	IC socket	
	XIC...4	53.03.0166	8 Pole	IC socket	
	XIC...5	53.03.0166	8 Pole	IC socket	
	XIC...6	53.03.0166	8 Pole	IC socket	
	XIC...7	53.03.0166	8 Pole	IC socket	
	XIC...8	53.03.0168	16 Pole	IC socket	
	XIC...9	53.03.0168	16 Pole	IC socket	
	XIC..10	53.03.0168	16 Pole	IC socket	
	XIC..11	53.03.0168	16 Pole	IC socket	
	XIC..12	53.03.0168	16 Pole	IC socket	
	XIC..13	53.03.0168	16 Pole	IC socket	
	XIC..14	53.03.0168	16 Pole	IC socket	
	XIC..15	53.03.0166	8 Pole	IC socket	
	XIC..16	53.03.0166	8 Pole	IC socket	
	XIC..17	53.03.0166	8 Pole	IC socket	
	XIC..18	53.03.0168	16 Pole	IC socket	
	XIC..19	53.03.0167	14 Pole	IC socket	
	XIC..20	53.03.0166	8 Pole	IC socket	
	XIC..21	53.03.0167	14 Pole	IC socket	
	XIC..22	53.03.0166	8 Pole	IC socket	

Note 1 - For excellent wow and flutter values at 3.75 ips the NPN - respective the PNP - Transistors should be from the same manufacturer.
Note 2 - C 51 for 3.75 / 7.5 / 15 IPS = 59.40.5474, 0.47 uF; PETP for 7.5 / 15 / 30 IPS = 59.26.5229, 2.2 uF; SAL, is included in the assembly "A1".

MATERIALS: CER = Ceramic, EL = Electrolyt.c, MF = Metalfilm
PETP = Polyesterfoil, PS = Polystyrol. PP = Polypropylen

MANUFACTURER: AMP = AMP Incorporated Ph = Philips
Fc = Fairchild Ra = Raytheon
GI = General Instruments SGS = SGS/Ates
IR = International Rectifier Sie = Siemens
Mot = Motorola Sig = Signetics
NEC = Nippon Electric Corp. St = Studer
NS = National Semiconductor TI = Texas Instruments

ORIG 91/09/30

COMMAND PANEL BOARD 2VU (2CH) 1.727.662.83

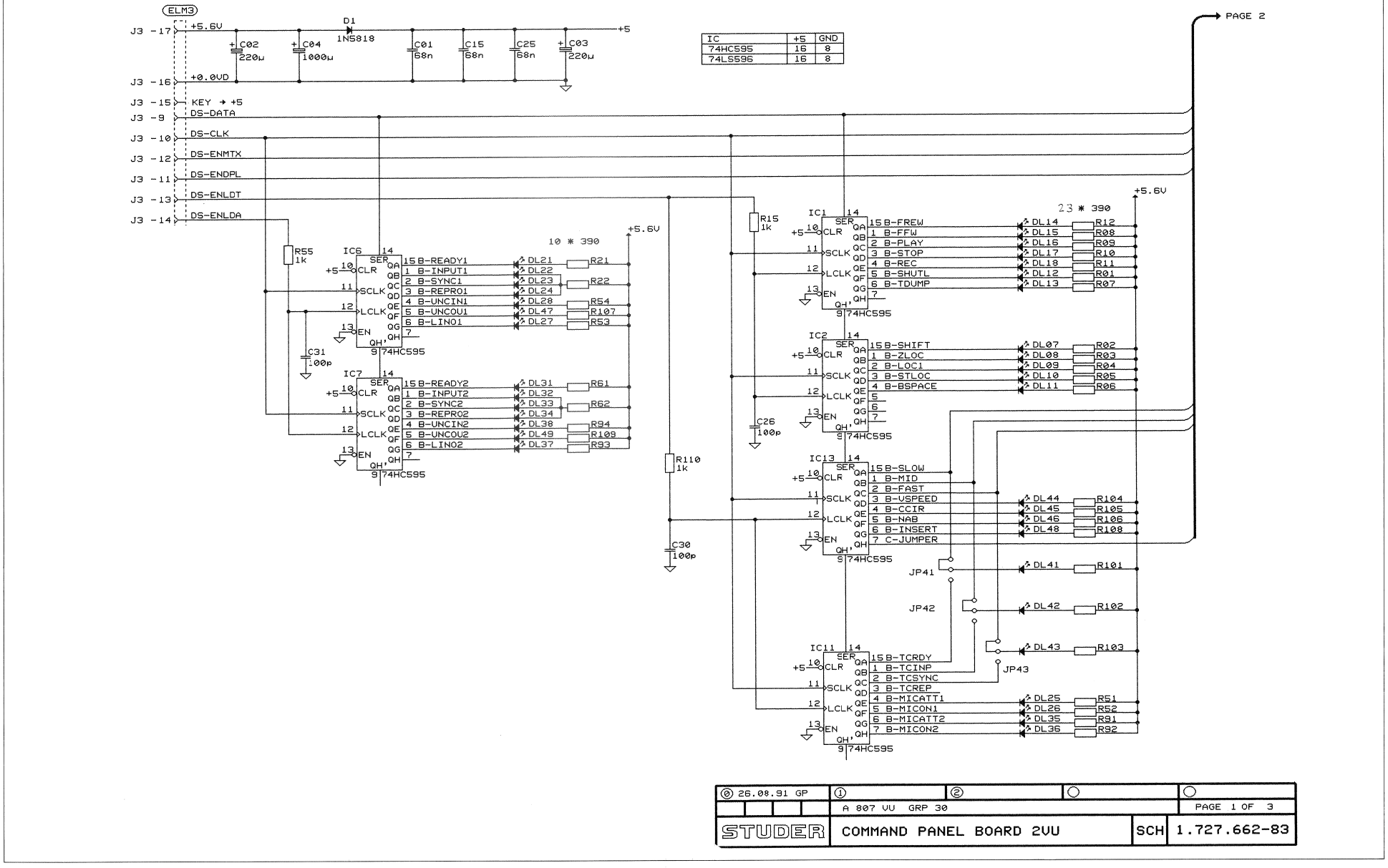

COMMAND PANEL BOARD 2VU (2CH) 1.727.662.83

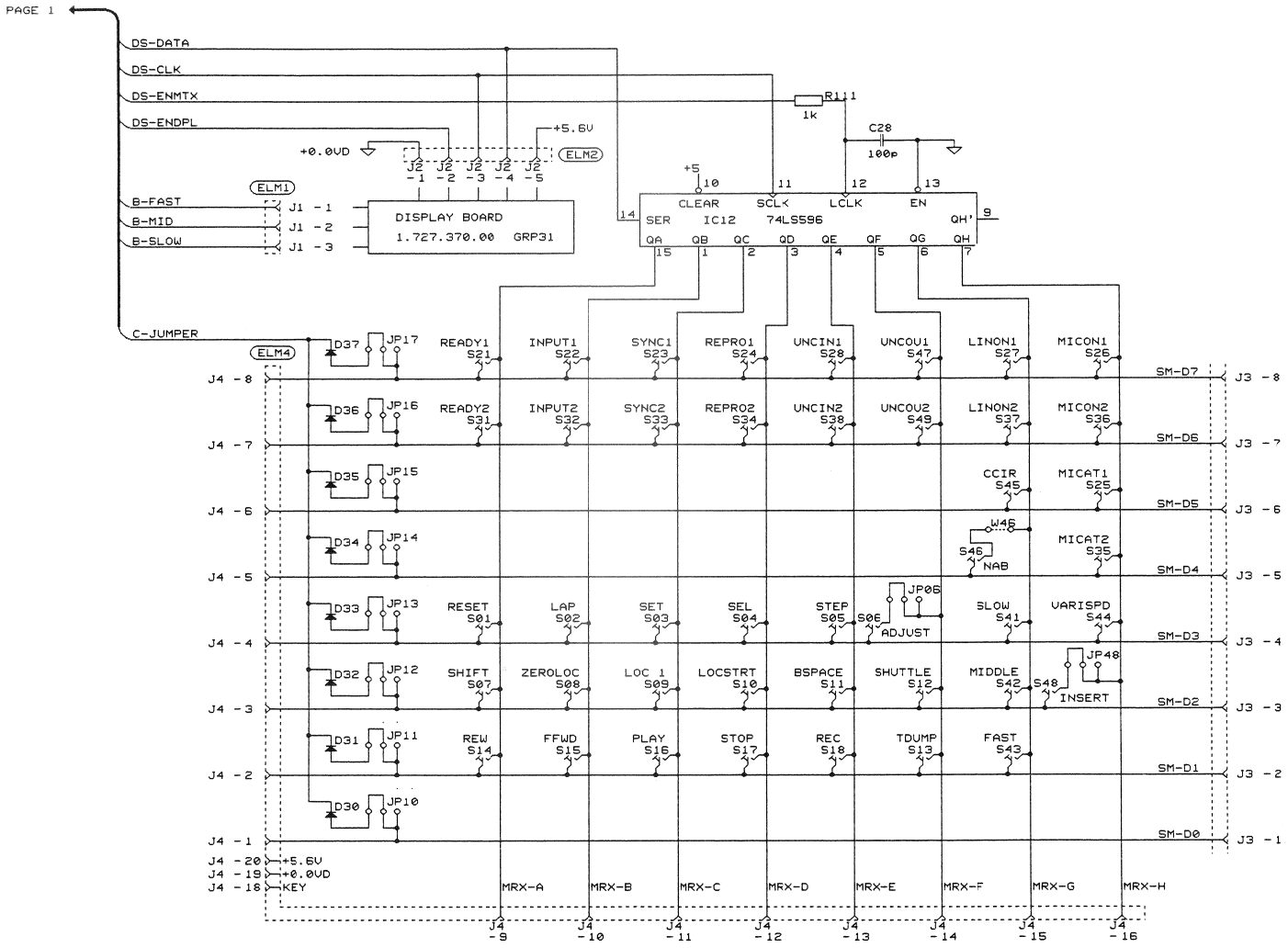

⓪ 26.08.91 GP	①	②		
	A 807 VU GRP 30			PAGE 2 OF 3
STUDER	COMMAND PANEL BOARD 2VU		SCH	1.727.662-83

COMMAND PANEL BOARD 2VU (2CH) 1.727.662.83

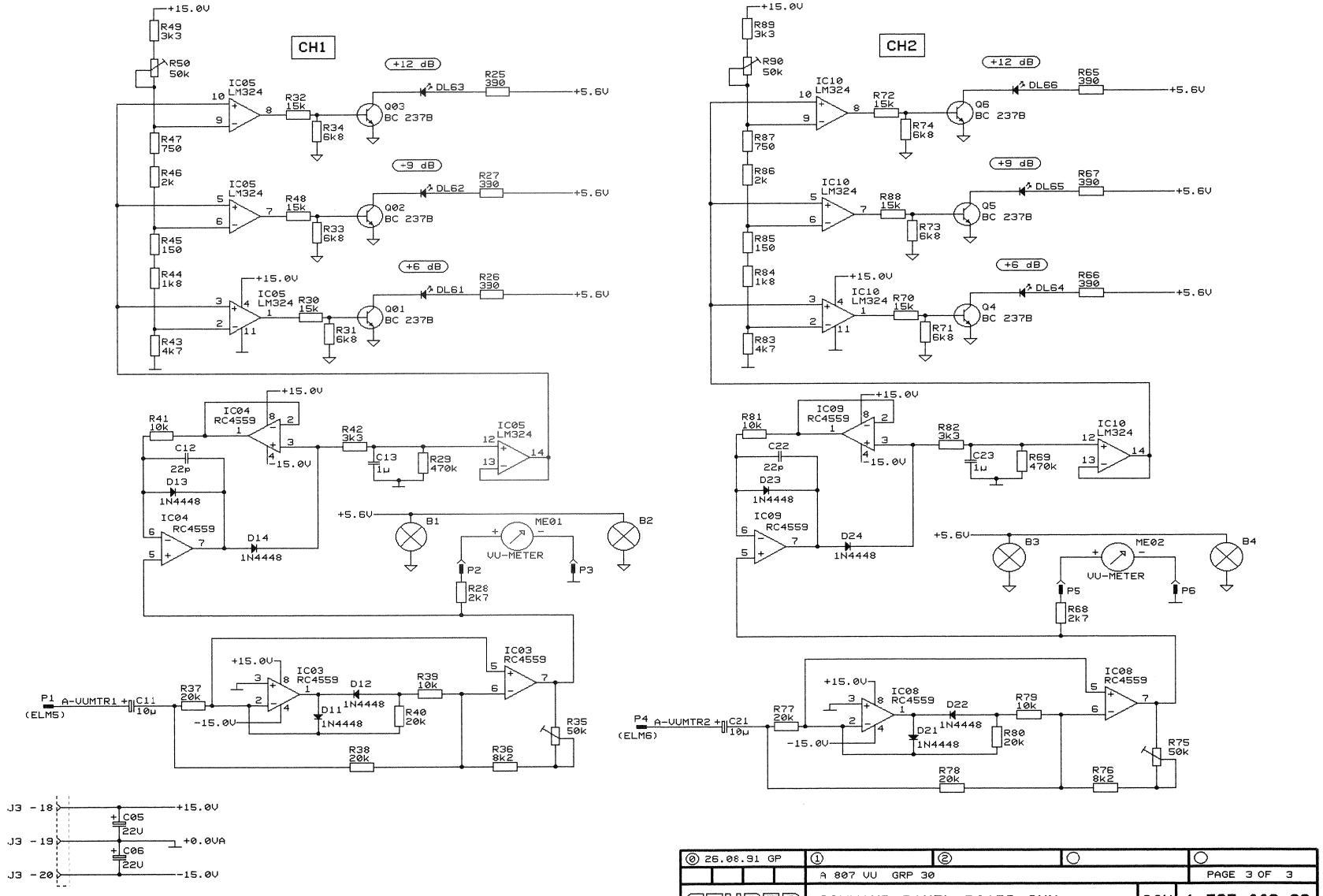

⓪ 26.08.91 GP	①	②	○	○
	A 807 VU GRP 30			PAGE 3 OF 3
STUDER	COMMAND PANEL BOARD 2VU		SCH	1.727.662-83

COMMAND PANEL BOARD 2VU (2CH) 1.727.662.83

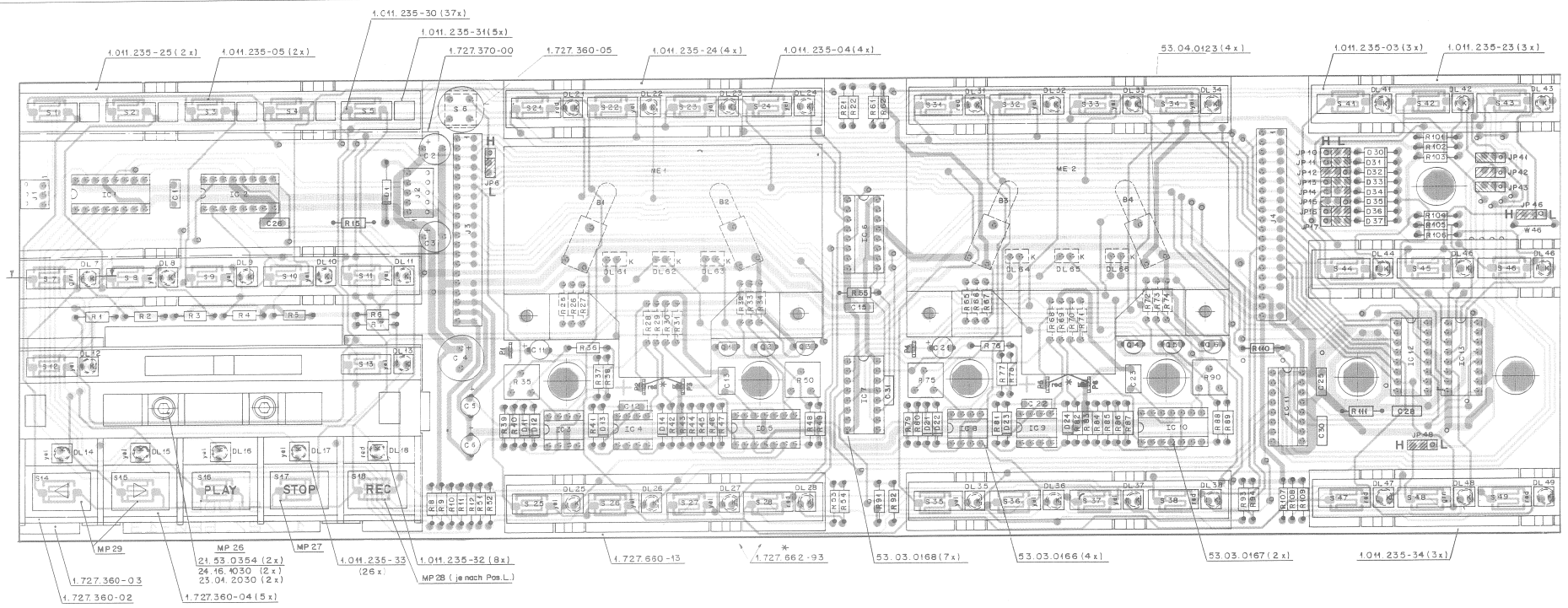

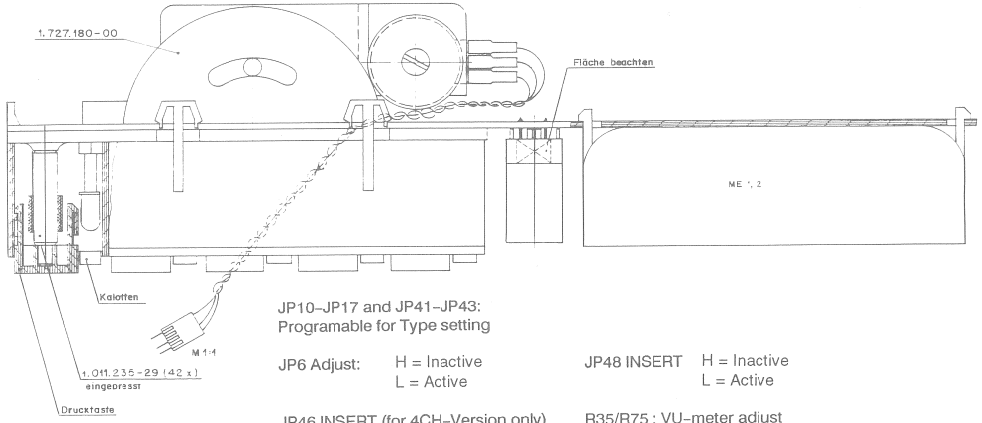

JP10–JP17 and JP41–JP43:
Programable for Type setting

JP6 Adjust: H = Inactive
L = Active

JP46 INSERT (for 4CH–Version only)
H = Inactive
L = Active

JP48 INSERT H = Inactive
L = Active

R35/R75 : VU–meter adjust
R50/R90 : Peak level indicator adjust

VALID FOR	NR. UNIT = NR. POS. LIST
COMMAND PANEL BOARD 0VU	1.727.660-83
COMMAND PANEL BOARD 1VU	1.727.661-83
COMMAND PANEL BOARD 2VU	1.727.662-83
COMMAND PANEL BOARD 2/2	1.727.663-83
COMMAND PANEL BOARD 2VU PBO	1.727.664-83
COMMAND PANEL BOARD 1VU PBO	1.727.665-83
COMMAND PANEL BOARD 0VU (4CH)	1.727.666-83
COMMAND PANEL BOARD UNC PBO	1.727.667-83
COMMAND PANEL BOARD UNC MONO PBO	1.727.668-83
COMMAND PANEL BOARD 0 VU TC	1.727.760-83
COMMAND PANEL BOARD 2 VU TC	1.727.762-83
COMMAND PANEL BOARD 2/2 TC	1.727.763-83
COMMAND PANEL BOARD (4CH) TC	1.727.766-83

Bestückt

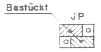

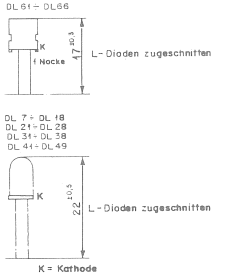

COMMAND PANEL BOARD 2VU (2CH) 1.727.662.83

IND.	POS.NO.	PART NO.	VALUE	SPECIFICATIONS / EQUIVALENT	MANUF.
	A.....1	1.727.370.00		Display Board	
	A.....2	1.727.180.00		Shuttle Control	
	B.....1	51.02.0144	6 V	0.03 A Lamp	
	B.....2	51.02.0144	6 V	0.03 A Lamp	
	B.....3	51.02.0144	6 V	0.03 A Lamp	
	B.....4	51.02.0144	6 V	0.03 A Lamp	
	C.....1	59.06.0683	68 nF	10X 50 V PETE	
	C.....2	59.22.3221	220 uF	-20X 10 V EL	
	C.....3	59.22.3221	220 uF	-20X 10 V EL	
	C.....4	59.22.3102	1000 uF	-20X 10 V EL	
	C.....5	59.22.5220	22 uF	-20X 25 V EL	
	C.....6	59.22.5220	22 uF	-20X 25 V EL	
	C.....11	59.22.6100	10 uF	-20X 25 V EL	
	C.....12	59.34.2220	22 pF	10X 50 V CER	
	C.....13	59.06.0105	1 uF	10X 50 V PETI	
	C.....15	59.06.0683	68 nF	10X 50 V PETI	
	C.....21	59.22.6100	10 uF	-20X 25 V EL	
	C.....22	59.34.2220	22 pF	10X 50 V CER	
	C.....23	59.06.0105	1 uF	10X 50 V PETI	
	C.....25	59.06.0683	68 nF	10X 50 V PETI	
	C.....26	59.45.4101	100 pF	10X 50 V CER	
	C.....27			not used	
	C.....28	59.45.4101	100 pF	10X 50 V CER	
	C.....29			not used	
	C.....30	59.45.4101	100 pF	10X 50 V CER	
	C.....31	59.45.4101	100 pF	10X 50 V CER	
	D.....1	50.04.0512	1N5818	30 V Schottky	
	D.....11	50.04.0125	1N4448	50 V SI	
	D.....12	50.04.0125	1N4448	50 V SI	
	D.....13	50.04.0125	1N4448	50 V SI	
	D.....14	50.04.0125	1N4448	50 V SI	
	D.....21	50.04.0125	1N4448	50 V SI	
	D.....22	50.04.0125	1N4448	50 V SI	
	D.....23	50.04.0125	1N4448	50 V SI	

IND.	POS.NO.	PART NO.	VALUE	SPECIFICATIONS / EQUIVALENT	MANUF.
	D.....24	50.04.0125	1N4448	50 V SI	
	D.....30	50.04.0125	1N4448	50 V SI	
	D.....31	50.04.0125	1N4448	50 V SI	
	D.....32	50.04.0125	1N4448	50 V SI	
	D.....33	50.04.0125	1N4448	50 V SI	
	D.....34	50.04.0125	1N4448	50 V SI	
	D.....35	50.04.0125	1N4448	50 V SI	
	D.....36	50.04.0125	1N4448	50 V SI	
	D.....37	50.04.0125	1N4448	50 V SI	
	DL....7	50.04.2501	MV5452	LED grn D=5 mm	GI
	DL....8	50.04.2500	MV5352	LED yel D=5 mm	GI
	DL....9	50.04.2500	MV5352	LED yel D=5 mm	GI
	DL....10	50.04.2500	MV5352	LED yel D=5 mm	GI
	DL....11	50.04.2500	MV5352	LED yel D=5 mm	GI
	DL....12	50.04.2500	MV5352	LED yel D=5 mm	GI
	DL....13	50.04.2500	MV5352	LED yel D=5 mm	GI
	DL....14	50.04.2500	MV5352	LED yel D=5 mm	GI
	DL....15	50.04.2500	MV5352	LED yel D=5 mm	GI
	DL....16	50.04.2500	MV5352	LED yel D=5 mm	GI
	DL....17	50.04.2500	MV5352	LED yel D=5 mm	GI
	DL....18	50.04.2115	MV5752	LED red D=5 mm	GI
	DL....21	50.04.2115	MV5752	LED red D=5 mm	GI
	DL....22	50.04.2500	MV5352	LED yel D=5 mm	GI
	DL....23	50.04.2500	MV5352	LED yel D=5 mm	GI
	DL....24	50.04.2500	MV5352	LED yel D=5 mm	GI
	DL....25	50.04.2500	MV5352	LED yel D=5 mm	GI
	DL....26	50.04.2500	MV5352	LED yel D=5 mm	GI
	DL....27	50.04.2500	MV5352	LED yel D=5 mm	GI
	DL....28	50.04.2115	MV5752	LED red D=5 mm	GI
	DL....31	50.04.2115	MV5752	LED red D=5 mm	GI
	DL....32	50.04.2500	MV5352	LED yel D=5 mm	GI
	DL....33	50.04.2500	MV5352	LED yel D=5 mm	GI
	DL....34	50.04.2500	MV5352	LED yel D=5 mm	GI
	DL....35	50.04.2500	MV5352	LED yel D=5 mm	GI
	DL....36	50.04.2500	MV5352	LED yel D=5 mm	GI
	DL....37	50.04.2500	MV5352	LED yel D=5 mm	GI

IND.	POS.NO.	PART NO.	VALUE	SPECIFICATIONS / EQUIVALENT	MANUF.
	DL....38	50.04.2115	MV5752	LED red D=5 mm	GI
	DL....41	50.04.2500	MV5352	LED yel D=5 mm	GI
	DL....42	50.04.2501	MV5452	LED grn D=5 mm	GI
	DL....43	50.04.2500	MV5352	LED yel D=5 mm	GI
	DL....44	50.04.2115	MV5752	LED red D=5 mm	GI
	DL....45	50.04.2500	MV5352	LED yel D=5 mm	GI
	DL....46	50.04.2500	MV5352	LED yel D=5 mm	GI
	DL....47	50.04.2115	MV5752	LED red D=5 mm	GI
	DL....48	50.04.2501	MV5452	LED grn D=5 mm	GI
	DL....49	50.04.2115	MV5752	LED red D=5 mm	GI
	DL....61	50.04.2119	MV57124	LED red 6.35*3.81	GI
	DL....62	50.04.2119	MV57124	LED red 6.35*3.81	GI
	DL....63	50.04.2119	MV57124	LED red 6.35*3.81	GI
	DL....64	50.04.2119	MV57124	LED red 6.35*3.81	GI
	DL....65	50.04.2119	MV57124	LED red 6.35*3.81	GI
	DL....66	50.04.2119		LED red 6.35*3.81	GI
	IC.....1	50.17.1595	74HC595	8-Bit Shift Register	TI
	IC.....2	50.17.1595	74HC595	8-Bit Shift Register	TI
	IC.....3	50.09.0107	RC4559	Dual Op. Amp.	Ra
	IC.....4	50.09.0107	RC4559	Dual Op. Amp.	Ra
	IC.....5	50.05.0199	LM324	Quad Op. Amp.	NS-Mot
	IC.....6	50.17.1595	74HC595	8-Bit Shift Register	TI
	IC.....7	50.17.1595	74HC595	8-Bit Shift Register	TI
	IC.....8	50.09.0107	RC4559	Dual Op. Amp.	Ra
	IC.....9	50.09.0107	RC4559	Dual Op. Amp.	Ra
	IC.....10	50.05.0199	LM324	Quad Op. Amp.	NS-Mot
	IC.....11	50.17.1595	74HC595	8-Bit Shift Register	TI
	IC.....12	50.06.0596	74LS596	8-Bit Shift Register O.C.	TI
	IC.....13	50.17.1595	74HC595	8-Bit Shift Register	TI
	J.....1	54.01.0287	3-Pole	CIS Socket Strip	AMP
	J.....2	54.01.0288	5-Pole	CIS Socket Strip	AMP
	J.....3	54.01.0237	20-Pole	CIS Socket Strip	AMP
	J.....4	54.01.0237	20-Pole	CIS Socket Strip	AMP
	JP....6	54.01.0021		Bridge	

IND.	POS.NO.	PART NO.	VALUE	SPECIFICATIONS / EQUIVALENT	MANUF.
	JP....10	54.01.0021		Bridge	
	JP....11	54.01.0021		Bridge	
	JP....12	54.01.0021		Bridge	
	JP....13	54.01.0021		Bridge	
	JP....14	54.01.0021		Bridge	
	JP....15	54.01.0021		Bridge	
	JP....16	54.01.0021		Bridge	
	JP....17	54.01.0021		Bridge	
	JP....41	54.01.0021		Bridge	
	JP....42	54.01.0021		Bridge	
	JP....43	54.01.0021		Bridge	
	JP....46			not used	
	JP....48	54.01.0021		Bridge	
	ME....1	1.727.360.01		VU Meter	
	ME....2	1.727.360.01		VU Meter	
	MP....1	54.01.0020	39 pcs	Contact Pin	
	MP....2	1.011.235.03	3 pcs	Push button case 3*	
	MP....3	1.011.235.04	4 pcs	Push button case 4*	
	MP....4	1.011.235.05	2 pcs	Push button case 5*	
	MP....5	1.011.235.23	3 pcs	Conductive rubber 3*	
	MP....6	1.011.235.24	4 pcs	Conductive rubber 4*	
	MP....7	1.011.235.25	2 pcs	Conductive rubber 5*	
	MP....8	1.011.235.29	42 pcs	Bolt	
	MP....9	1.011.235.30	37 pcs	Push button 14*5	
	MP....12	1.011.235.31	5 pcs	Dummy calotte	
	MP....11	1.011.235.32	8 pcs	Calotte red	
	MP....12	1.011.235.33	26 pcs	Calotte yel	
	MP....13	1.011.235.34	3 pcs	Calotte grn	
	MP....14	1.727.360.02	1 pce	Push button case with Shuttle	
	MP....15	1.727.360.03	1 pce	Conductive rubber with Shuttle	
	MP....16	1.727.360.04	5 pcs	Push button 19*14	
	MP....17	1.727.360.05	1 pcs	Push button Adj.	
	MP....18	1.727.662.10	1 pce	No. Label	
	MP....19	1.727.660.13	1 pce	Command Panel PCB	
	MP....20	53.03.0221	43 pcs	2-pole LED Socket	

IND.	POS.NO.	PART NO.	VALUE	SPECIFICATIONS / EQUIVALENT	MANUF.
	MP....21	1.727.362.93	2 pcs	L-LST Command Panel Board	
	MP....22	21.53.0354	2 pcs	Hexagon socket head cap screw M3*6	
	MP....23	23.01.2032	2 pcs	Washer	
	MP....24	24.16.1030	2 pcs	Pin washer	
	MP....25	43.01.0108	1 pcs	ESE Warning label	
	MP....26	1.727.360.07	1 pcs	Push button label , PLAY	
	MP....27	1.727.360.08	1 pcs	Push button label , STOP	
	MP....28	1.727.360.09	1 pcs	Push button label , RECORD	
	MP....29	1.727.360.19	2 pcs	Push button labels, FORWARD,REWIND	
	P.....1	54.02.0320		Plug 2.8*0.8	AMP
	P.....2	54.02.0320		Plug 2.8*0.8	AMP
	P.....3	54.02.0320		Plug 2.8*0.8	AMP
	P.....4	54.02.0320		Plug 2.8*0.8	AMP
	P.....5	54.02.0320		Plug 2.8*0.8	AMP
	P.....6	54.02.0320		Plug 2.8*0.8	AMP
	Q.....1	50.03.0436	BC237B	BC547B, 3C550B NPN	
	Q.....2	50.03.0436	BC237B	BC547B, 3C550B NPN	
	Q.....3	50.03.0436	BC237B	BC547B, 3C550B NPN	
	Q.....4	50.03.0436	BC237B	BC547B, 3C550B NPN	
	Q.....5	50.03.0436	BC237B	BC547B, 3C550B NPN	
	Q.....6	50.03.0436	BC237B	BC547B, 3C550B NPN	
	R.....1	57.11.3391	390 Ohm	1X, 0.25W, MF	
	R.....2	57.11.3391	390 Ohm	1X, 0.25W, MF	
	R.....3	57.11.3391	390 Ohm	1X, 0.25W, MF	
	R.....4	57.11.3391	390 Ohm	1X, 0.25W, MF	
	R.....5	57.11.3391	390 Ohm	1X, 0.25W, MF	
	R.....6	57.11.3391	390 Ohm	1X, 0.25W, MF	
	R.....7	57.11.3391	390 Ohm	1X, 0.25W, MF	
	R.....8	57.11.3391	390 Ohm	1X, 0.25W, MF	
	R.....9	57.11.3391	390 Ohm	1X, 0.25W, MF	
	R....10	57.11.3391	390 Ohm	1X, 0.25W, MF	
	R....11	57.11.3391	390 Ohm	1X, 0.25W, MF	
	R....12	57.11.3391	390 Ohm	1X, 0.25W, MF	
	R....15	57.11.3102	1 kOhm	1X, 0.25W, MF	

IND.	POS.NO.	PART NO.	VALUE	SPECIFICATIONS / EQUIVALENT	MANUF.
	R....21	57.11.3391	390 Ohm	1X, 0.25W, MF	
	R....22	57.11.3391	390 Ohm	1X, 0.25W, MF	
	R....25	57.11.3391	390 Ohm	1X, 0.25W, MF	
	R....26	57.11.3391	390 Ohm	1X, 0.25W, MF	
	R....27	57.11.3391	390 Ohm	1X, 0.25W, MF	
	R....28	57.11.3272	2.7 kOhm	1X, 0.25W, MF	
	R....29	57.11.3474	470 kOhm	1X, 0.25W, MF	
	R....30	57.11.3153	15 kOhm	1X, 0.25W, MF	
	R....31	57.11.3682	6.8 kOhm	1X, 0.25W, MF	
	R....32	57.11.3153	15 kOhm	1X, 0.25W, MF	
	R....33	57.11.3682	6.8 kOhm	1X, 0.25W, MF	
	R....34	57.11.3682	6.8 kOhm	1X, 0.25W, MF	
	R....35	58.01.8503	50 kOhm	10X, 0.5 W, PCerm	
	R....36	57.11.3822	8.2 kOhm	1X, 0.25W, MF	
	R....37	57.11.3203	20 kOhm	1X, 0.25W, MF	
	R....38	57.11.3203	20 kOhm	1X, 0.25W, MF	
	R....39	57.11.3103	10 kOhm	1X, 0.25W, MF	
	R....40	57.11.3203	20 kOhm	1X, 0.25W, MF	
	R....41	57.11.3103	10 kOhm	1X, 0.25W, MF	
	R....42	57.11.3332	3.3 kOhm	1X, 0.25W, MF	
	R....43	57.11.3472	4.7 kOhm	1X, 0.25W, MF	
	R....44	57.11.3182	1.8 kOhm	1X, 0.25W, MF	
	R....45	57.11.3151*	150 Ohm	1X, 0.25W, MF	
	R....46	57.11.3202	2 kOhm	1X, 0.25W, MF	
	R....47	57.11.3751	750 Ohm	1X, 0.25W, MF	
	R....48	57.11.3153	15 kOhm	1X, 0.25W, MF	
	R....49	57.11.3332	3.3 kOhm	1X, 0.25W, MF	
	R....50	58.01.8503	50 kOhm	10X, 0.5 W, PCerm	
	R....51	57.11.3391	390 Ohm	1X, 0.25W, MF	
	R....52	57.11.3391	390 Ohm	1X, 0.25W, MF	
	R....53	57.11.3391	390 Ohm	1X, 0.25W, MF	
	R....54	57.11.3391	390 Ohm	1X, 0.25W, MF	
	R....55	57.11.3102	1 kOhm	1X, 0.25W, MF	
	R....61	57.11.3391	390 Ohm	1X, 0.25W, MF	
	R....62	57.11.3391	390 Ohm	1X, 0.25W, MF	
	R....65	57.11.3391	390 Ohm	1X, 0.25W, MF	
	R....66	57.11.3391	390 Ohm	1X, 0.25W, MF	

IND.	POS.NO.	PART NO.	VALUE	SPECIFICATIONS / EQUIVALENT	MANUF.
	R....67	57.11.3391	390 Ohm	1X, 0.25W, MF	
	R....68	57.11.3272	2.7 kOhm	1X, 0.25W, MF	
	R....69	57.11.3474	470 kOhm	1X, 0.25W, MF	
	R....70	57.11.3153	15 kOhm	1X, 0.25W, MF	
	R....71	57.11.3682	6.8 kOhm	1X, 0.25W, MF	
	R....72	57.11.3153	15 kOhm	1X, 0.25W, MF	
	R....73	57.11.3682	6.8 kOhm	1X, 0.25W, MF	
	R....74	57.11.3682	6.8 kOhm	1X, 0.25W, MF	
	R....75	58.01.8503	50 kOhm	10X, 0.5 W, PCerm	
	R....76	57.11.3822	8.2 kOhm	1X, 0.25W, MF	
	R....77	57.11.3203	20 kOhm	1X, 0.25W, MF	
	R....78	57.11.3203	20 kOhm	1X, 0.25W, MF	
	R....79	57.11.3103	10 kOhm	1X, 0.25W, MF	
	R....80	57.11.3203	20 kOhm	1X, 0.25W, MF	
	R....81	57.11.3103	10 kOhm	1X, 0.25W, MF	
	R....82	57.11.3332	3.3 kOhm	1X, 0.25W, MF	
	R....83	57.11.3472	4.7 kOhm	1X, 0.25W, MF	
	R....84	57.11.3182	1.8 kOhm	1X, 0.25W, MF	
	R....85	57.11.3151	150 Ohm	1X, 0.25W, MF	
	R....86	57.11.3202	2 kOhm	1X, 0.25W, MF	
	R....87	57.11.3751	750 Ohm	1X, 0.25W, MF	
	R....88	57.11.3153	15 kOhm	1X, 0.25W, MF	
	R....89	57.11.3332	3.3 kOhm	1X, 0.25W, MF	
	R....90	58.01.8503	50 kOhm	10X, 0.5 W, PCerm	
	R....91	57.11.3391	390 Ohm	1X, 0.25W, MF	
	R....92	57.11.3391	390 Ohm	1X, 0.25W, MF	
	R....93	57.11.3391	390 Ohm	1X, 0.25W, MF	
	R....94	57.11.3391	390 Ohm	1X, 0.25W, MF	
	R....101	57.11.3391	390 Ohm	1X, 0.25W, MF	
	R....102	57.11.3391	390 Ohm	1X, 0.25W, MF	
	R....103	57.11.3391	390 Ohm	1X, 0.25W, MF	
	R....104	57.11.3391	390 Ohm	1X, 0.25W, MF	
	R....105	57.11.3391	390 Ohm	1X, 0.25W, MF	
	R....106	57.11.3391	390 Ohm	1X, 0.25W, MF	
	R....107	57.11.3391	390 Ohm	1X, 0.25W, MF	
	R....108	57.11.3391	390 Ohm	1X, 0.25W, MF	
	R....109	57.11.3391	390 Ohm	1X, 0.25W, MF	

IND.	POS.NO.	PART NO.	VALUE	SPECIFICATIONS / EQUIVALENT	MANUF.
	R....110	57.11.3102	1 kOhm	1X, 0.25W, MF	
	R....111	57.11.3102	1 kOhm	1X, 0.25W, MF	
	S.....6	55.15.0130		Push button Switch	ITT
	W....46	64.01.0106		Wire Bridge	
	XB....1	53.04.0123		Lamp holder	
	XB....2	53.04.0123		Lamp holder	
	XB....3	53.04.0123		Lamp holder	
	XB....4	53.04.0123		Lamp holder	
	XIC...1	53.03.0168	16-Pole	IC Socket	
	XIC...2	53.03.0168	16-Pole	IC Socket	
	XIC...3	53.03.0166	8-Pole	IC Socket	
	XIC...4	53.03.0166	8-Pole	IC Socket	
	XIC...5	53.03.0167	14-Pole	IC Socket	
	XIC...6	53.03.0168	16-Pole	IC Socket	
	XIC...7	53.03.0168	16-Pole	IC Socket	
	XIC...8	53.03.0166	8-Pole	IC Socket	
	XIC...9	53.03.0166	8-Pole	IC Socket	
	XIC...10	53.03.0167	14-Pole	IC Socket	
	XIC...11	53.03.0168	16-Pole	IC Socket	
	XIC...12	53.03.0168	16-Pole	IC Socket	
	XIC...13	53.03.0168	16-Pole	IC Socket	

CER=Ceramic, EL=Electrolytic, PETP=Polyester, SI=Silicon,
MF=Metal Film, PCerm=Pot. Cermet,
MANUFACTURER: AMP, GI=General Instrument, ITT, Mot=Motorola,
NS=National Semiconductor / Ph=Philips, Ra=Raytheon,
TI=Texas Instruments

ORIG 91/08/26

(for circuit diagram and components layout see under 1.727.662.83)

COMMAND PANEL BOARD 0VU (2CH) 1.727.660.83

Ad	..POS..	...REF.No...	DESCRIPTION	MANUFACTURER
	A....1	1.727.370.00	Display Board	
	A....2	1.727.180.00	Shuttle Control	
	C....1	59.06.0683	68 nF 10% 50 V PETP	
	C....2	59.22.3221	220 uF -20% 10 V EL	
	C....3	59.22.3221	220 uF -20% 10 V EL	
	C....4	59.22.3102	1000 uF -20% 10 V EL	
	C....25	59.06.0683	68 nF 10% 50 V PETP	
	C....26	59.45.4101	100 pF 10% 50 V CER	
	C....27	00.00.0000	not used	
	C....28	59.45.4101	100 pF 10% 50 V CER	
	C....29	00.00.0000	not used	
	C....30	59.45.4101	100 pF 10% 50 V CER	
	D....1	50.04.0512	1N5818 30 V Schottky	
	D....30	50.04.0125	1N4448 50 V SI	
	D....31	50.04.0125	1N4448 50 V SI	
	D....32	50.04.0125	1N4448 50 V SI	
	D....33	50.04.0125	1N4448 50 V SI	
	D....34	50.04.0125	1N4448 50 V SI	
	D....35	50.04.0125	1N4448 50 V SI	
	D....36	50.04.0125	1N4448 50 V SI	
	D....37	50.04.0125	1N4448 50 V SI	
	DL....7	50.04.2501	MV5452 LED grn D=5 mm	GI
	DL....8	50.04.2500	MV5352 LED yel D=5 mm	GI
	DL....9	50.04.2500	MV5352 LED yel D=5 mm	GI
	DL...10	50.04.2500	MV5352 LED yel D=5 mm	GI
	DL...11	50.04.2500	MV5352 LED yel D=5 mm	GI
	DL...12	50.04.2500	MV5352 LED yel D=5 mm	GI
	DL...13	50.04.2500	MV5352 LED yel D=5 mm	GI
	DL...14	50.04.2500	MV5352 LED yel D=5 mm	GI
	DL...15	50.04.2500	MV5352 LED yel D=5 mm	GI
	DL...16	50.04.2500	MV5352 LED yel D=5 mm	GI
	DL...17	50.04.2500	MV5352 LED yel D=5 mm	GI
	DL...18	50.04.2115	MV5752 LED red D=5 mm	GI
	DL...41	50.04.2500	MV5352 LED yel D=5 mm	GI
	DL...42	50.04.2501	MV5452 LED grn D=5 mm	GI
	DL...43	50.04.2500	MV5352 LED yel D=5 mm	GI
	DL...44	50.04.2115	MV5752 LED red D=5 mm	GI
	DL...45	50.04.2500	MV5352 LED yel D=5 mm	GI
	DL...46	50.04.2500	MV5352 LED yel D=5 mm	GI
	DL...48	50.04.2501	MV5452 LED grn D=5 mm	GI
	IC....1	50.17.1595	74HC595 8-Bit Shift Register	TI
	IC....2	50.17.1595	74HC595 8-Bit Shift Register	TI
	IC...12	50.06.0596	74LS596 8-Bit Shift Register O.C.	TI
	IC...13	50.17.1595	74HC595 8-Bit Shift Register	TI
	J.....1	54.01.0287	3-Pole CIS Socket Strip	AMP
	J.....2	54.01.0288	5-Pole CIS Socket Strip	AMP
	J.....3	54.01.0237	20-Pole CIS Socket Strip	AMP
	J.....4	54.01.0237	20-Pole CIS Socket Strip	AMP
	JP....6	54.01.0021	Bridge	
	JP...10	54.01.0021	Bridge	
	JP...11	54.01.0021	Bridge	
	JP...12	54.01.0021	Bridge	
	JP...13	54.01.0021	Bridge	
	JP...14	54.01.0021	Bridge	
	JP...15	54.01.0021	Bridge	
	JP...16	54.01.0021	Bridge	
	JP...17	54.01.0021	Bridge	
	JP...41	54.01.0021	Bridge	
	JP...42	54.01.0021	Bridge	
	JP...43	54.01.0021	Bridge	
	JP...46	00.00.0000	not used	
	JP...48	54.01.0021	Bridge	
	MP....1	54.01.0020	39 pcs Contact Pin	
	MP....2	1.011.235.03	3 pcs Push button case 3*	
	MP....4	1.011.235.05	2 pcs Push button case 5*	
	MP....5	1.011.235.23	3 pcs Conductive rubber 3*	
	MP....7	1.011.235.25	2 pcs Conductive rubber 5*	
	MP....8	1.011.235.29	24 pcs Bolt	
	MP....9	1.011.235.30	19 pcs Push button 14*5	
	MP...10	1.011.235.31	5 pcs Dummy calotte	
	MP...11	1.011.235.32	2 pcs Calotte red	
	MP...12	1.011.235.33	14 pcs Calotte yel	
	MP...13	1.011.235.34	3 pcs Calotte grn	
	MP...14	1.727.360.02	1 pcs Push button case with Shuttle	
	MP...15	1.727.360.03	1 pcs Conductive rubber with Shuttle	
	MP...16	1.727.360.04	5 pcs Push button 19*14	
	MP...17	1.727.360.05	1 pcs Push button Adj.	
	MP...18	1.727.660.10	1 pcs No. Label	
	MP...19	1.727.660.13	1 pcs Command Panel PCB	
	MP...20	53.03.0221	19 pcs 2-pole LED Socket	
	MP...22	21.53.0354	2 pcs Hexagon socket head cap screw M3*6	
	MP...23	23.01.2032	2 pcs Washer	
	MP...24	24.16.1030	2 pcs Fin washer	
	MP...25	43.01.0108	1 pcs ESE Warning label	
	MP...26	1.727.360.07	1 pce Push button label , PLAY	
	MP...27	1.727.360.08	1 pce Push button label , STOP	
	MP...28	1.727.360.09	1 pce Push button label , RECORD	
	MP...29	1.727.360.19	2 pcs Push button labels, FORWARD,REWIND	
	MP...30	1.011.235.35	2 pcs Dummy push button 19*5	
	R.....1	57.11.3391	390 Ohm 1%, 0.25W, MF	
	R.....2	57.11.3391	390 Ohm 1%, 0.25W, MF	
	R.....3	57.11.3391	390 Ohm 1%, 0.25W, MF	
	R.....4	57.11.3391	390 Ohm 1%, 0.25W, MF	
	R.....5	57.11.3391	390 Ohm 1%, 0.25W, MF	
	R.....6	57.11.3391	390 Ohm 1%, 0.25W, MF	
	R.....7	57.11.3391	390 Ohm 1%, 0.25W, MF	
	R.....8	57.11.3391	390 Ohm 1%, 0.25W, MF	
	R.....9	57.11.3391	390 Ohm 1%, 0.25W, MF	
	R....10	57.11.3391	390 Ohm 1%, 0.25W, MF	
	R....11	57.11.3391	390 Ohm 1%, 0.25W, MF	
	R....12	57.11.3391	390 Ohm 1%, 0.25W, MF	
	R....15	57.11.3102	1 kOhm 1%, 0.25W, MF	
	R...101	57.11.3391	390 Ohm 1%, 0.25W, MF	
	R...102	57.11.3391	390 Ohm 1%, 0.25W, MF	
	R...103	57.11.3391	390 Ohm 1%, 0.25W, MF	
	R...104	57.11.3391	390 Ohm 1%, 0.25W, MF	
	R...105	57.11.3391	390 Ohm 1%, 0.25W, MF	
	R...106	57.11.3391	390 Ohm 1%, 0.25W, MF	
	R...108	57.11.3391	390 Ohm 1%, 0.25W, MF	
	R...110	57.11.3102	1 kOhm 1%, 0.25W, MF	
	R...111	57.11.3102	1 kOhm 1%, 0.25W, MF	
	S.....6	55.15.0130	Push button Switch	ITT
	W....46	64.01.0106	Wire Bridge	
	XIC...1	53.03.0168	16-Pole IC Socket	
	XIC...2	53.03.0168	16-Pole IC Socket	
	XIC..12	53.03.0168	16-Pole IC Socket	
	XIC..13	53.03.0168	16-Pole IC Socket	

CER=Ceramic, EL=Electrolytic, PETP=Polyester, SI=Silicon,
MF=Metal Film, PCerm=Pot. Cermet,
MANUFACTURER: AMP, GI=General Instrument, ITT, Mot=Motorola,
NS=National Semiconductor , Ph=Philips, Ra=Raytheon,
TI=Texas Instruments

1.727.660.83 COMMAND PANEL BOARD 0VU GP 91/08/2600

END

(for circuit diagram and components layout see under 1.727.662.83)

COMMAND PANEL BOARD 1VU (1CH) 1.727.661.83

Ad	..POS..	...REF.No...	DESCRIPTION	MANUFACTURER
	A....1	1.727.370.00	Display Board	
	A....2	1.727.180.00	Shuttle Control	
	B....1	51.02.0144	6 V 0.03 A Lamp	
	B....2	51.02.0144	6 V 0.03 A Lamp	
	C....1	59.06.0683	68 nF 10% 50 V PETP	
	C....2	59.22.3221	220 uF -20% 10 V EL	
	C....3	59.22.3221	220 uF -20% 10 V EL	
	C....4	59.22.3102	1000 uF -20% 10 V EL	
	C....5	59.22.5220	22 uF -20% 25 V EL	
	C....6	59.22.5220	22 uF -20% 25 V EL	
	C....11	59.22.6100	10 uF -20% 25 V EL	
	C....12	59.34.2220	22 pF 10% 50 V CER	
	C....13	59.06.0105	1 uF 10% 50 V PETP	
	C....15	59.06.0683	68 nF 10% 50 V PETP	
	C....25	59.06.0683	68 nF 10% 50 V PETP	
	C....26	59.45.4101	100 pF 10% 50 V CER	
	C....27	00.00.0000	not used	
	C....28	59.45.4101	100 pF 10% 50 V CER	
	C....29	00.00.0000	not used	
	C....30	59.45.4101	100 pF 10% 50 V CER	
	C....31	59.45.4101	100 pF 10% 50 V CER	
	D....1	50.04.0512	1N5818 30 V Schottky	
	D....11	50.04.0125	1N4448 50 V SI	
	D....12	50.04.0125	1N4448 50 V SI	
	D....13	50.04.0125	1N4448 50 V SI	
	D....14	50.04.0125	1N4448 50 V SI	
	D....30	50.04.0125	1N4448 50 V SI	
	D....31	50.04.0125	1N4448 50 V SI	
	D....32	50.04.0125	1N4448 50 V SI	
	D....33	50.04.0125	1N4448 50 V SI	
	D....34	50.04.0125	1N4448 50 V SI	
	D....35	50.04.0125	1N4448 50 V SI	
	D....36	50.04.0125	1N4448 50 V SI	
	D....37	50.04.0125	1N4448 50 V SI	
	DL....7	50.04.2501	MV5452 LED grn D=5 mm	GI
	DL....8	50.04.2500	MV5352 LED yel D=5 mm	GI
	DL....9	50.04.2500	MV5352 LED yel D=5 mm	GI
	DL...10	50.04.2500	MV5352 LED yel D=5 mm	GI
	DL...11	50.04.2500	MV5352 LED yel D=5 mm	GI
	DL...12	50.04.2500	MV5352 LED yel D=5 mm	GI
	DL...13	50.04.2500	MV5352 LED yel D=5 mm	GI
	DL...14	50.04.2500	MV5352 LED yel D=5 mm	GI
	DL...15	50.04.2500	MV5352 LED yel D=5 mm	GI
	DL...16	50.04.2500	MV5352 LED yel D=5 mm	GI
	DL...17	50.04.2500	MV5352 LED yel D=5 mm	GI
	DL...18	50.04.2115	MV5752 LED red D=5 mm	GI
	DL...21	50.04.2115	MV5752 LED red D=5 mm	GI
	DL...22	50.04.2500	MV5352 LED yel D=5 mm	GI
	DL...23	50.04.2500	MV5352 LED yel D=5 mm	GI
	DL...24	50.04.2500	MV5352 LED yel D=5 mm	GI
	DL...25	50.04.2500	MV5352 LED yel D=5 mm	GI
	DL...26	50.04.2500	MV5352 LED yel D=5 mm	GI
	DL...27	50.04.2500	MV5352 LED yel D=5 mm	GI
	DL...28	50.04.2115	MV5752 LED red D=5 mm	GI
	DL...41	50.04.2500	MV5352 LED yel D=5 mm	GI
	DL...42	50.04.2501	MV5452 LED grn D=5 mm	GI
	DL...43	50.04.2500	MV5352 LED yel D=5 mm	GI
	DL...44	50.04.2115	MV5752 LED red D=5 mm	GI
	DL...45	50.04.2500	MV5352 LED yel D=5 mm	GI
	DL...46	50.04.2500	MV5352 LED yel D=5 mm	GI
	DL...47	50.04.2115	MV5752 LED red D=5 mm	GI
	DL...48	50.04.2501	MV5452 LED grn D=5 mm	GI
	DL...61	50.04.2119	MV57124 LED red 6.35*3.81	GI
	DL...62	50.04.2119	MV57124 LED red 6.35*3.81	GI
	DL...63	50.04.2119	MV57124 LED red 6.35*3.81	GI
	IC....1	50.17.1595	74HC595 8-Bit Shift Register	TI
	IC....2	50.17.1595	74HC595 8-Bit Shift Register	TI
	IC....3	50.09.0107	RC4559 Dual Op. Amp.	Ra
	IC....4	50.09.0107	RC4559 Dual Op. Amp.	Ra
	IC....5	50.05.0199	LM324 Quad Op. Amp.	NS,Mot
	IC....6	50.17.1595	74HC595 8-Bit Shift Register	TI
	IC...11	50.17.1595	74HC595 8-Bit Shift Register	TI
	IC...12	50.06.0596	74LS596 8-Bit Shift Register O.C.	TI
	IC...13	50.17.1595	74HC595 8-Bit Shift Register	TI
	J.....1	54.01.0287	3-Pole CIS Socket Strip	AMP
	J.....2	54.01.0288	5-Pole CIS Socket Strip	AMP
	J.....3	54.01.0237	20-Pole CIS Socket Strip	AMP
	J.....4	54.01.0237	20-Pole CIS Socket Strip	AMP
	JP....6	54.01.0021	Bridge	
	JP...10	54.01.0021	Bridge	
	JP...11	54.01.0021	Bridge	
	JP...12	54.01.0021	Bridge	
	JP...13	54.01.0021	Bridge	
	JP...14	54.01.0021	Bridge	
	JP...15	54.01.0021	Bridge	
	JP...16	54.01.0021	Bridge	
	JP...17	54.01.0021	Bridge	
	JP...41	54.01.0021	Bridge	
	JP...42	54.01.0021	Bridge	
	JP...43	54.01.0021	Bridge	
	JP...46	00.00.0000	not used	
	JP...48	54.01.0021	Bridge	
	ME....1	1.727.360.01	VU Meter	
	MP....1	54.01.0020	39 pcs Contact Pin	
	MP....2	1.011.235.03	3 pcs Push button case 3*	
	MP....3	1.011.235.04	2 pcs Push button case 4*	
	MP....4	1.011.235.05	2 pcs Push button case 5*	
	MP....5	1.011.235.23	3 pcs Conductive rubber 3*	
	MP....6	1.011.235.24	2 pcs Conductive rubber 4*	
	MP....7	1.011.235.25	2 pcs Conductive rubber 5*	
	MP....8	1.011.235.29	33 pcs Bolt	
	MP....9	1.011.235.30	28 pcs Push button 14*5	
	MP...10	1.011.235.31	5 pcs Dummy calotte	
	MP...11	1.011.235.32	5 pcs Calotte red	
	MP...12	1.011.235.33	20 pcs Calotte yel	
	MP...13	1.011.235.34	3 pcs Calotte grn	
	MP...14	1.727.360.02	1 pce Push button case with Shuttle	
	MP...15	1.727.360.03	1 pce Conductive rubber with Shuttle	
	MP...16	1.727.360.04	5 pcs Push button 19*14	
	MP...17	1.727.360.05	1 pce Push button Adj.	
	MP...18	1.727.661.10	1 pce No. Label	
	MP...19	1.727.660.13	1 pce Command Panel PCB	
	MP...20	53.03.0221	31 pcs 2-pole LED Socket	
	MP...21	1.727.362.93	1 pce L-LST Command Panel Board	
	MP...22	21.53.0354	2 pcs Hexagon socket head cap screw M3*6	
	MP...23	23.01.2032	2 pcs Washer	
	MP...24	24.16.1030	2 pcs Fin washer	
	MP...25	43.01.0108	1 pce ESE Warning label	
	MP...26	1.727.360.07	1 pce Push button label , PLAY	
	MP...27	1.727.360.08	1 pce Push button label , STOP	
	MP...28	1.727.360.09	1 pce Push button label , RECORD	
	MP...29	1.727.360.19	2 pcs Push button labels, FORWARD,REWIND	
	MP...30	1.011.235.35	1 pce Dummy push button 19*5 (S49)	
	P.....1	54.02.0320	Plug 2.8*0.8	AMP
	P.....2	54.02.0320	Plug 2.8*0.8	AMP
	P.....3	54.02.0320	Plug 2.8*0.8	AMP
	Q.....1	50.03.0436	BC237B BC547B, BC550B NPN	
	Q.....2	50.03.0436	BC237B BC547B, BC550B NPN	
	Q.....3	50.03.0436	BC237B BC547B, BC550B NPN	
	R.....1	57.11.3391	390 Ohm 1%, 0.25W, MF	
	R.....2	57.11.3391	390 Ohm 1%, 0.25W, MF	
	R.....3	57.11.3391	390 Ohm 1%, 0.25W, MF	
	R.....4	57.11.3391	390 Ohm 1%, 0.25W, MF	
	R.....5	57.11.3391	390 Ohm 1%, 0.25W, MF	
	R.....6	57.11.3391	390 Ohm 1%, 0.25W, MF	
	R.....7	57.11.3391	390 Ohm 1%, 0.25W, MF	
	R.....8	57.11.3391	390 Ohm 1%, 0.25W, MF	
	R.....9	57.11.3391	390 Ohm 1%, 0.25W, MF	
	R....10	57.11.3391	390 Ohm 1%, 0.25W, MF	
	R....11	57.11.3391	390 Ohm 1%, 0.25W, MF	
	R....12	57.11.3391	390 Ohm 1%, 0.25W, MF	
	R....15	57.11.3102	1 kOhm 1%, 0.25W, MF	
	R....21	57.11.3391	390 Ohm 1%, 0.25W, MF	
	R....22	57.11.3391	390 Ohm 1%, 0.25W, MF	
	R....25	57.11.3391	390 Ohm 1%, 0.25W, MF	
	R....26	57.11.3391	390 Ohm 1%, 0.25W, MF	
	R....27	57.11.3391	390 Ohm 1%, 0.25W, MF	
	R....28	57.11.3272	2.7 kOhm 1%, 0.25W, MF	
	R....29	57.11.3474	470 kOhm 1%, 0.25W, MF	
	R....30	57.11.3153	15 kOhm 1%, 0.25W, MF	
	R....31	57.11.3682	6.8 kOhm 1%, 0.25W, MF	
	R....32	57.11.3153	15 kOhm 1%, 0.25W, MF	
	R....33	57.11.3682	6.8 kOhm 1%, 0.25W, MF	
	R....34	57.11.3682	6.8 kOhm 1%, 0.25W, MF	
	R....35	58.01.8503	50 kOhm 10%, 0.5 W, PCerm	
	R....36	57.11.3822	8.2 kOhm 1%, 0.25W, MF	
	R....37	57.11.3203	20 kOhm 1%, 0.25W, MF	
	R....38	57.11.3203	20 kOhm 1%, 0.25W, MF	
	R....39	57.11.3103	10 kOhm 1%, 0.25W, MF	
	R....40	57.11.3203	20 kOhm 1%, 0.25W, MF	
	R....41	57.11.3103	10 kOhm 1%, 0.25W, MF	
	R....42	57.11.3332	3.3 kOhm 1%, 0.25W, MF	
	R....43	57.11.3472	4.7 kOhm 1%, 0.25W, MF	
	R....44	57.11.3182	1.8 kOhm 1%, 0.25W, MF	
	R....45	57.11.3151	150 Ohm 1%, 0.25W, MF	
	R....46	57.11.3202	2 kOhm 1%, 0.25W, MF	
	R....47	57.11.3751	750 Ohm 1%, 0.25W, MF	
	R....48	57.11.3153	15 kOhm 1%, 0.25W, MF	
	R....49	57.11.3332	3.3 kOhm 1%, 0.25W, MF	
	R....50	58.01.8503	50 kOhm 10%, 0.5 W, PCerm	
	R....51	57.11.3391	390 Ohm 1%, 0.25W, MF	
	R....52	57.11.3391	390 Ohm 1%, 0.25W, MF	
	R....53	57.11.3391	390 Ohm 1%, 0.25W, MF	
	R....54	57.11.3391	390 Ohm 1%, 0.25W, MF	
	R....55	57.11.3102	1 kOhm 1%, 0.25W, MF	
	R...101	57.11.3391	390 Ohm 1%, 0.25W, MF	
	R...102	57.11.3391	390 Ohm 1%, 0.25W, MF	
	R...103	57.11.3391	390 Ohm 1%, 0.25W, MF	
	R...104	57.11.3391	390 Ohm 1%, 0.25W, MF	
	R...105	57.11.3391	390 Ohm 1%, 0.25W, MF	
	R...106	57.11.3391	390 Ohm 1%, 0.25W, MF	
	R...107	57.11.3391	390 Ohm 1%, 0.25W, MF	

COMMAND PANEL BOARD 1VU (1CH) 1.727.661.83

Ad	..POS..	...REF.No...	DESCRIPTION	MANUFACTURER
	R...108	57.11.3391	390 Ohm 1%, 0.25W, MF	
	R...110	57.11.3102	1 kOhm 1%, 0.25W, MF	
	R...111	57.11.3102	1 kOhm 1%, 0.25W, MF	
	S.....6	55.15.0130	Push button Switch	ITT
	W....46	64.01.0106	Wire Bridge	
	XB....1	53.04.0123	Lamp holder	
	XB....2	53.04.0123	Lamp holder	
	XIC...1	53.03.0168	16-Pole IC Socket	
	XIC...2	53.03.0168	16-Pole IC Socket	
	XIC...3	53.03.0166	8-Pole IC Socket	
	XIC...4	53.03.0166	8-Pole IC Socket	
	XIC...5	53.03.0167	14-Pole IC Socket	
	XIC...6	53.03.0168	16-Pole IC Socket	
	XIC..11	53.03.0168	16-Pole IC Socket	
	XIC..12	53.03.0168	16-Pole IC Socket	
	XIC..13	53.03.0168	16-Pole IC Socket	

CER=Ceramic, EL=Electrolytic, PETP=Polyester, SI=Silicon,
MF=Metal Film, PCerm=Pot. Cermet,
MANUFACTURER: AMP, GI=General Instrument, ITT, Mot=Motorola,
NS=National Semiconductor , Ph=Philips, Ra=Raytheon,
TI=Texas Instruments

1.727.661.83 COMMAND PANEL BOARD 1VU GP 91/08/2600

(for circuit diagram and components layout see under 1.727.662.83)

COMMAND PANEL BOARD 2/2 (2CH) 1.727.663.83

Ad	..POS..	...REF.No...	DESCRIPTION				MANUFACTURER
	A.....1	1.727.370.00	Display Board				
	A.....2	1.727.180.00	Shuttle Control				
	C.....1	59.06.0683	68 nF	10%	50 V	PETP	
	C.....2	59.22.3221	220 uF	-20%	10 V	EL	
	C.....3	59.22.3221	220 uF	-20%	10 V	EL	
	C.....4	59.22.3102	1000 uF	-20%	10 V	EL	
	C....15	59.06.0683	68 nF	10%	50 V	PETP	
	C....25	59.06.0683	68 nF	10%	50 V	PETP	
	C....26	59.45.4101	100 pF	10%	50 V	CER	
	C....27	00.00.0000	not used				
	C....28	59.45.4101	100 pF	10%	50 V	CER	
	C....29	00.00.0000	not used				
	C....30	59.45.4101	100 pF	10%	50 V	CER	
	C....31	59.45.4101	100 pF	10%	50 V	CER	
	D.....1	50.04.0512	1N5818		30 V	Schottky	
	D....30	50.04.0125	1N4448		50 V	SI	
	D....31	50.04.0125	1N4448		50 V	SI	
	D....32	50.04.0125	1N4448		50 V	SI	
	D....33	50.04.0125	1N4448		50 V	SI	
	D....34	50.04.0125	1N4448		50 V	SI	
	D....35	50.04.0125	1N4448		50 V	SI	
	D....36	50.04.0125	1N4448		50 V	SI	
	D....37	50.04.0125	1N4448		50 V	SI	
	DL....7	50.04.2501	MV5452	LED grn D=5 mm			GI
	DL....8	50.04.2500	MV5352	LED yel D=5 mm			GI
	DL....9	50.04.2500	MV5352	LED yel D=5 mm			GI
	DL...10	50.04.2500	MV5352	LED yel D=5 mm			GI
	DL...11	50.04.2500	MV5352	LED yel D=5 mm			GI
	DL...12	50.04.2500	MV5352	LED yel D=5 mm			GI
	DL...13	50.04.2500	MV5352	LED yel D=5 mm			GI
	DL...14	50.04.2500	MV5352	LED yel D=5 mm			GI
	DL...15	50.04.2500	MV5352	LED yel D=5 mm			GI
	DL...16	50.04.2500	MV5352	LED yel D=5 mm			GI
	DL...17	50.04.2500	MV5352	LED yel D=5 mm			GI
	DL...18	50.04.2115	MV5752	LED red D=5 mm			GI
	DL...21	50.04.2115	MV5752	LED red D=5 mm			GI
	DL...22	50.04.2500	MV5352	LED yel D=5 mm			GI
	DL...23	50.04.2500	MV5352	LED yel D=5 mm			GI
	DL...24	50.04.2500	MV5352	LED yel D=5 mm			GI
	DL...31	50.04.2115	MV5752	LED red D=5 mm			GI
	DL...32	50.04.2500	MV5352	LED yel D=5 mm			GI
	DL...33	50.04.2500	MV5352	LED yel D=5 mm			GI
	DL...34	50.04.2500	MV5352	LED yel D=5 mm			GI
	DL...41	50.04.2500	MV5352	LED yel D=5 mm			GI
	DL...42	50.04.2501	MV5452	LED grn D=5 mm			GI
	DL...43	50.04.2500	MV5352	LED yel D=5 mm			GI
	DL...44	50.04.2115	MV5752	LED red D=5 mm			GI
	DL...45	50.04.2500	MV5352	LED yel D=5 mm			GI
	DL...46	50.04.2500	MV5352	LED yel D=5 mm			GI
	DL...48	50.04.2501	MV5452	LED grn D=5 mm			GI
	IC....1	50.17.1595	74HC595	8-Bit Shift Register			TI
	IC....2	50.17.1595	74HC595	8-Bit Shift Register			TI
	IC....6	50.17.1595	74HC595	8-Bit Shift Register			TI
	IC....7	50.17.1595	74HC595	8-Bit Shift Register			TI
	IC...12	50.06.0596	74LS596	8-Bit Shift Register O.C.			TI
	IC...13	50.17.1595	74HC595	8-Bit Shift Register			TI
	J.....1	54.01.0287	3-Pole	CIS Socket Strip			AMP
	J.....2	54.01.0288	5-Pole	CIS Socket Strip			AMP
	J.....3	54.01.0237	20-Pole	CIS Socket Strip			AMP
	J.....4	54.01.0237	20-Pole	CIS Socket Strip			AMP
	JP....6	54.01.0021	Bridge				
	JP...10	54.01.0021	Bridge				
	JP...11	54.01.0021	Bridge				
	JP...12	54.01.0021	Bridge				
	JP...13	54.01.0021	Bridge				
	JP...14	54.01.0021	Bridge				
	JP...15	54.01.0021	Bridge				
	JP...16	54.01.0021	Bridge				
	JP...17	54.01.0021	Bridge				
	JP...41	54.01.0021	Bridge				
	JP...42	54.01.0021	Bridge				
	JP...43	54.01.0021	Bridge				
	JP...46	00.00.0000	not used				
	JP...48	54.01.0021	Bridge				
	MP....1	54.01.0020	39 pcs	Contact Pin			
	MP....2	1.011.235.03	3 pcs	Push button case 3*			
	MP....3	1.011.235.04	2 pcs	Push button case 4*			
	MP....4	1.011.235.05	2 pcs	Push button case 5*			
	MP....5	1.011.235.23	3 pcs	Conductive rubber 3*			
	MP....6	1.011.235.24	2 pcs	Conductive rubber 4*			
	MP....7	1.011.235.25	2 pcs	Conductive rubber 5*			
	MP....8	1.011.235.29	32 pcs	Bolt			
	MP....9	1.011.235.30	27 pcs	Push button 14*5			
	MP...10	1.011.235.31	5 pcs	Dummy calotte			
	MP...11	1.011.235.32	4 pcs	Calotte red			
	MP...12	1.011.235.33	20 pcs	Calotte yel			
	MP...13	1.011.235.34	3 pcs	Calotte grn			

Ad	..POS..	...REF.No...	DESCRIPTION				MANUFACTURER
	MP...14	1.727.360.02	1 pce	Push button case with Shuttle			
	MP...15	1.727.360.03	1 pce	Conductive rubber with Shuttle			
	MP...16	1.727.360.04	5 pcs	Push button 19*14			
	MP...17	1.727.360.05	1 pce	Push button Adj.			
	MP...18	1.727.663.10	1 pce	No. Label			
	MP...19	1.727.660.13	1 pce	Command Panel PCB			
	MP...20	53.03.0221	29 pcs	2-Pole Socket, XDL7-18, 21-24, 31-34, 41-49			
	MP...22	21.53.0354	2 pcs	Hexagon socket head cap screw M3*6			
	MP...23	23.01.2032	2 pcs	Washer			
	MP...24	24.16.1030	2 pcs	Fin washer			
	MP...25	43.01.0108	1 pce	ESE Warning label			
	MP...26	1.727.360.07	1 pce	Push button label , PLAY			
	MP...27	1.727.360.08	1 pce	Push button label , STOP			
	MP...28	1.727.360.09	1 pce	Push button label , RECORD			
	MP...29	1.727.360.19	2 pcs	Push button labels, FORWARD,REWIND			
	MP...30	1.011.235.35	2 pcs	Dummy push button 19*5			
	R.....1	57.11.3391	390 Ohm	1%, 0.25W, MF			
	R.....2	57.11.3391	390 Ohm	1%, 0.25W, MF			
	R.....3	57.11.3391	390 Ohm	1%, 0.25W, MF			
	R.....4	57.11.3391	390 Ohm	1%, 0.25W, MF			
	R.....5	57.11.3391	390 Ohm	1%, 0.25W, MF			
	R.....6	57.11.3391	390 Ohm	1%, 0.25W, MF			
	R.....7	57.11.3391	390 Ohm	1%, 0.25W, MF			
	R.....8	57.11.3391	390 Ohm	1%, 0.25W, MF			
	R.....9	57.11.3391	390 Ohm	1%, 0.25W, MF			
	R....10	57.11.3391	390 Ohm	1%, 0.25W, MF			
	R....11	57.11.3391	390 Ohm	1%, 0.25W, MF			
	R....12	57.11.3391	390 Ohm	1%, 0.25W, MF			
	R....15	57.11.3102	1 kOhm	1%, 0.25W, MF			
	R....21	57.11.3391	390 Ohm	1%, 0.25W, MF			
	R....22	57.11.3391	390 Ohm	1%, 0.25W, MF			
	R....55	57.11.3102	1 kOhm	1%, 0.25W, MF			
	R....61	57.11.3391	390 Ohm	1%, 0.25W, MF			
	R....62	57.11.3391	390 Ohm	1%, 0.25W, MF			
	R...101	57.11.3391	390 Ohm	1%, 0.25W, MF			
	R...102	57.11.3391	390 Ohm	1%, 0.25W, MF			
	R...103	57.11.3391	390 Ohm	1%, 0.25W, MF			
	R...104	57.11.3391	390 Ohm	1%, 0.25W, MF			
	R...105	57.11.3391	390 Ohm	1%, 0.25W, MF			
	R...106	57.11.3391	390 Ohm	1%, 0.25W, MF			
	R...107	57.11.3391	390 Ohm	1%, 0.25W, MF			
	R...108	57.11.3391	390 Ohm	1%, 0.25W, MF			
	R...109	57.11.3391	390 Ohm	1%, 0.25W, MF			
	R...110	57.11.3102	1 kOhm	1%, 0.25W, MF			
	R...111	57.11.3102	1 kOhm	1%, 0.25W, MF			
	S.....6	55.15.0130	Push button Switch				ITT
	W....46	64.01.0106	Wire Bridge				
	XIC...1	53.03.0168	16-Pole	IC Socket			
	XIC...2	53.03.0168	16-Pole	IC Socket			
	XIC...6	53.03.0168	16-Pole	IC Socket			
	XIC...7	53.03.0168	16-Pole	IC Socket			
	XIC..11	53.03.0168	16-Pole	IC Socket			
	XIC..12	53.03.0168	16-Pole	IC Socket			
	XIC..13	53.03.0168	16-Pole	IC Socket			

Note 1: used for XDL 7-18, XDL 21-24, XDL 31-34, XDL 41-49

CER=Ceramic, EL=Electrolytic, PETP=Polyester, SI=Silicon,
MF=Metal Film, PCerm=Pot. Cermet,
MANUFACTURER: AMP, GI=General Instrument, ITT, Mot=Motorola,
NS=National Semiconductor , Ph=Philips, Ra=Raytheon,
TI=Texas Instruments

1.727.663.83 COMMAND PANEL BOARD 2/2 GP 91/08/2600

END

(for circuit diagram and components layout see under 1.727.662.83)

COMMAND PANEL BOARD 2VU PBO (2CH) 1.727.664.83

Ad	..POS..	...REF.No...	DESCRIPTION	MANUFACTURER
	A.....1	1.727.370.00	Display Board	
	A.....2	1.727.180.00	Shuttle Control	
	B.....1	51.02.0144	6 V 0.03 A Lamp	
	B.....2	51.02.0144	6 V 0.03 A Lamp	
	B.....3	51.02.0144	6 V 0.03 A Lamp	
	B.....4	51.02.0144	6 V 0.03 A Lamp	
	C.....1	59.06.0683	68 nF 10% 50 V PETP	
	C.....2	59.22.3221	220 uF -20% 10 V EL	
	C.....3	59.22.3221	220 uF -20% 10 V EL	
	C.....4	59.22.3102	1000 uF -20% 10 V EL	
	C.....5	59.22.5220	22 uF -20% 25 V EL	
	C.....6	59.22.5220	22 uF -20% 25 V EL	
	C....11	59.22.6100	10 uF -20% 25 V EL	
	C....12	59.34.2220	22 pF 10% 50 V CER	
	C....13	59.06.0105	1 uF 10% 50 V PETP	
	C....15	59.06.0683	68 nF 10% 50 V PETP	
	C....21	59.22.6100	10 uF -20% 25 V EL	
	C....22	59.34.2220	22 pF 10% 50 V CER	
	C....23	59.06.0105	1 uF 10% 50 V PETP	
	C....25	59.06.0683	68 nF 10% 50 V PETP	
	C....26	59.45.4101	100 pF 10% 50 V CER	
	C....27	00.00.0000	not used	
	C....28	59.45.4101	100 pF 10% 50 V CER	
	C....29	00.00.0000	not used	
	C....30	59.45.4101	100 pF 10% 50 V CER	
	C....31	59.45.4101	100 pF 10% 50 V CER	
	D.....1	50.04.0512	1N5818 30 V Schottky	
	D....11	50.04.0125	1N4448 50 V SI	
	D....12	50.04.0125	1N4448 50 V SI	
	D....13	50.04.0125	1N4448 50 V SI	
	D....14	50.04.0125	1N4448 50 V SI	
	D....21	50.04.0125	1N4448 50 V SI	
	D....22	50.04.0125	1N4448 50 V SI	
	D....23	50.04.0125	1N4448 50 V SI	
	D....24	50.04.0125	1N4448 50 V SI	
	D....30	50.04.0125	1N4448 50 V SI	
	D....31	50.04.0125	1N4448 50 V SI	
	D....32	50.04.0125	1N4448 50 V SI	
	D....33	50.04.0125	1N4448 50 V SI	
	D....34	50.04.0125	1N4448 50 V SI	
	D....35	50.04.0125	1N4448 50 V SI	
	D....36	50.04.0125	1N4448 50 V SI	
	D....37	50.04.0125	1N4448 50 V SI	
	DL....7	50.04.2501	MV5452 LED grn D=5 mm	GI
	DL....8	50.04.2500	MV5352 LED yel D=5 mm	GI
	DL....9	50.04.2500	MV5352 LED yel D=5 mm	GI
	DL...10	50.04.2500	MV5352 LED yel D=5 mm	GI
	DL...11	50.04.2500	MV5352 LED yel D=5 mm	GI
	DL...12	50.04.2500	MV5352 LED yel D=5 mm	GI
	DL...13	50.04.2500	MV5352 LED yel D=5 mm	GI
	DL...14	50.04.2500	MV5352 LED yel D=5 mm	GI
	DL...15	50.04.2500	MV5352 LED yel D=5 mm	GI
	DL...16	50.04.2500	MV5352 LED yel D=5 mm	GI
	DL...17	50.04.2500	MV5352 LED yel D=5 mm	GI
	DL...41	50.04.2500	MV5352 LED yel D=5 mm	GI
	DL...42	50.04.2501	MV5452 LED grn D=5 mm	GI
	DL...43	50.04.2500	MV5352 LED yel D=5 mm	GI
	DL...44	50.04.2115	MV5752 LED red D=5 mm	GI
	DL...45	50.04.2500	MV5352 LED yel D=5 mm	GI
	DL...46	50.04.2500	MV5352 LED yel D=5 mm	GI
	DL...47	50.04.2115	MV5752 LED red D=5 mm	GI
	DL...48	50.04.2501	MV5452 LED grn D=5 mm	GI
	DL...49	50.04.2115	MV5752 LED red D=5 mm	GI
	DL...61	50.04.2119	MV57124 LED red 6.35*3.81	GI
	DL...62	50.04.2119	MV57124 LED red 6.35*3.81	GI
	DL...63	50.04.2119	MV57124 LED red 6.35*3.81	GI
	DL...64	50.04.2119	MV57124 LED red 6.35*3.81	GI
	DL...65	50.04.2119	MV57124 LED red 6.35*3.81	GI
	DL...66	50.04.2119	MV57124 LED red 6.35*3.81	GI
	IC....1	50.17.1595	74HC595 8-Bit Shift Register	TI
	IC....2	50.17.1595	74HC595 8-Bit Shift Register	TI
	IC....3	50.09.0107	RC4559 Dual Op. Amp.	Ra
	IC....4	50.09.0107	RC4559 Dual Op. Amp.	Ra
	IC....5	50.05.0199	LM324 Quad Op. Amp.	NS,Mot
	IC....6	50.17.1595	74HC595 8-Bit Shift Register	TI
	IC....7	50.17.1595	74HC595 8-Bit Shift Register	TI
	IC....8	50.09.0107	RC4559 Dual Op. Amp.	Ra
	IC....9	50.09.0107	RC4559 Dual Op. Amp.	Ra
	IC...10	50.05.0199	LM324 Quad Op. Amp.	NS,Mot
	IC...12	50.06.0596	74LS596 8-Bit Shift Register O.C.	TI
	IC...13	50.17.1595	74HC595 8-Bit Shift Register	TI
	J.....1	54.01.0287	3-Pole CIS Socket Strip	AMP
	J.....2	54.01.0288	5-Pole CIS Socket Strip	AMP
	J.....3	54.01.0237	20-Pole CIS Socket Strip	AMP
	J.....4	54.01.0237	20-Pole CIS Socket Strip	AMP
	JP....6	54.01.0021	Bridge	
	JP...10	54.01.0021	Bridge	
	JP...11	54.01.0021	Bridge	
	JP...12	54.01.0021	Bridge	
	JP...13	54.01.0021	Bridge	
	JP...14	54.01.0021	Bridge	
	JP...15	54.01.0021	Bridge	
	JP...16	54.01.0021	Bridge	
	JP...17	54.01.0021	Bridge	
	JP...41	54.01.0021	Bridge	
	JP...42	54.01.0021	Bridge	
	JP...43	54.01.0021	Bridge	
	JP...46	00.00.0000	not used	
	JP...48	54.01.0021	Bridge	
	ME....1	1.727.360.01	VU Meter	
	ME....2	1.727.360.01	VU Meter	
	MP....1	54.01.0020	39 pcs Contact Pin	
	MP....2	1.011.235.03	3 pcs Push button case 3*	
	MP....4	1.011.235.05	2 pcs Push button case 5*	
	MP....5	1.011.235.23	3 pcs Conductive rubber 3*	
	MP....7	1.011.235.25	2 pcs Conductive rubber 5*	
	MP....8	1.011.235.29	26 pcs Bolt	
	MP....9	1.011.235.30	21 pcs Push button 14*5	
	MP...10	1.011.235.31	6 pcs Dummy calotte	
	MP...11	1.011.235.32	3 pcs Calotte red	
	MP...12	1.011.235.33	14 pcs Calotte yel	
	MP...13	1.011.235.34	3 pcs Calotte grn	
	MP...14	1.727.360.02	1 pce Push button case with Shuttle	
	MP...15	1.727.360.03	1 pce Conductive rubber with Shuttle	
	MP...16	1.727.360.04	5 pcs Push button 19*14	
	MP...17	1.727.360.05	1 pce Push button Adj.	
	MP...18	1.727.664.10	1 pce No. Label	
	MP...19	1.727.660.13	1 pce Command Panel PCB	
	MP...20	53.03.0221	26 pcs 2-pole LED Socket	
	MP...21	1.727.362.93	2 pcs L-LST Command Panel Board	
	MP...22	21.53.0354	2 pcs Hexagon socket head cap screw M3*6	
	MP...23	23.01.2032	2 pcs Washer	
	MP...24	24.16.1030	2 pcs Fin washer	
	MP...25	43.01.0108	1 pce ESE Warning label	
	MP...26	1.727.360.07	1 pce Push button label , PLAY	
	MP...27	1.727.360.08	1 pce Push button label , STOP	
	MP...28	1.727.364.02	1 pce Push button label , blank (for S18)	
	MP...29	1.727.360.19	2 pcs Push button labels, FORWARD,REWIND	
	P.....1	54.02.0320	Plug 2.8*0.8	AMP
	P.....2	54.02.0320	Plug 2.8*0.8	AMP
	P.....3	54.02.0320	Plug 2.8*0.8	AMP
	P.....4	54.02.0320	Plug 2.8*0.8	AMP
	P.....5	54.02.0320	Plug 2.8*0.8	AMP
	P.....6	54.02.0320	Plug 2.8*0.8	AMP
	Q.....1	50.03.0436	BC237B BC547B, BC550B NPN	
	Q.....2	50.03.0436	BC237B BC547B, BC550B NPN	
	Q.....3	50.03.0436	BC237B BC547B, BC550B NPN	
	Q.....4	50.03.0436	BC237B BC547B, BC550B NPN	
	Q.....5	50.03.0436	BC237B BC547B, BC550B NPN	
	Q.....6	50.03.0436	BC237B BC547B, BC550B NPN	
	R.....1	57.11.3391	390 Ohm 1%, 0.25W, MF	
	R.....2	57.11.3391	390 Ohm 1%, 0.25W, MF	
	R.....3	57.11.3391	390 Ohm 1%, 0.25W, MF	
	R.....4	57.11.3391	390 Ohm 1%, 0.25W, MF	
	R.....5	57.11.3391	390 Ohm 1%, 0.25W, MF	
	R.....6	57.11.3391	390 Ohm 1%, 0.25W, MF	
	R.....7	57.11.3391	390 Ohm 1%, 0.25W, MF	
	R.....8	57.11.3391	390 Ohm 1%, 0.25W, MF	
	R.....9	57.11.3391	390 Ohm 1%, 0.25W, MF	
	R....10	57.11.3391	390 Ohm 1%, 0.25W, MF	
	R....11	57.11.3391	390 Ohm 1%, 0.25W, MF	
	R....12	57.11.3391	390 Ohm 1%, 0.25W, MF	
	R....15	57.11.3102	1 kOhm 1%, 0.25W, MF	
	R....25	57.11.3391	390 Ohm 1%, 0.25W, MF	
	R....26	57.11.3391	390 Ohm 1%, 0.25W, MF	
	R....27	57.11.3391	390 Ohm 1%, 0.25W, MF	
	R....28	57.11.3272	2.7 kOhm 1%, 0.25W, MF	
	R....29	57.11.3474	470 kOhm 1%, 0.25W, MF	
	R....30	57.11.3153	15 kOhm 1%, 0.25W, MF	
	R....31	57.11.3682	6.8 kOhm 1%, 0.25W, MF	
	R....32	57.11.3153	15 kOhm 1%, 0.25W, MF	
	R....33	57.11.3682	6.8 kOhm 1%, 0.25W, MF	
	R....34	57.11.3682	6.8 kOhm 1%, 0.25W, MF	
	R....35	58.01.8503	50 kOhm 10%, 0.5 W, PCerm	
	R....36	57.11.3822	8.2 kOhm 1%, 0.25W, MF	
	R....37	57.11.3203	20 kOhm 1%, 0.25W, MF	
	R....38	57.11.3203	20 kOhm 1%, 0.25W, MF	
	R....39	57.11.3103	10 kOhm 1%, 0.25W, MF	
	R....40	57.11.3203	20 kOhm 1%, 0.25W, MF	
	R....41	57.11.3103	10 kOhm 1%, 0.25W, MF	
	R....42	57.11.3332	3.3 kOhm 1%, 0.25W, MF	
	R....43	57.11.3472	4.7 kOhm 1%, 0.25W, MF	
	R....44	57.11.3182	1.8 kOhm 1%, 0.25W, MF	
	R....45	57.11.3151	150 Ohm 1%, 0.25W, MF	
	R....46	57.11.3202	2 kOhm 1%, 0.25W, MF	
	R....47	57.11.3751	750 Ohm 1%, 0.25W, MF	
	R....48	57.11.3153	15 kOhm 1%, 0.25W, MF	
	R....49	57.11.3332	3.3 kOhm 1%, 0.25W, MF	
	R....50	58.01.8503	50 kOhm 10%, 0.5 W, PCerm	
	R....55	57.11.3102	1 kOhm 1%, 0.25W, MF	
	R....65	57.11.3391	390 Ohm 1%, 0.25W, MF	
	R....66	57.11.3391	390 Ohm 1%, 0.25W, MF	
	R....67	57.11.3391	390 Ohm 1%, 0.25W, MF	
	R....68	57.11.3272	2.7 kOhm 1%, 0.25W, MF	

COMMAND PANEL BOARD 2VU PBO (2CH) 1.727.664.83

Ad	..POS..	...REF.No...	DESCRIPTION	MANUFACTURER
	R....69	57.11.3474	470 kOhm 1%, 0.25W, MF	
	R....70	57.11.3153	15 kOhm 1%, 0.25W, MF	
	R....71	57.11.3682	6.8 kOhm 1%, 0.25W, MF	
	R....72	57.11.3153	15 kOhm 1%, 0.25W, MF	
	R....73	57.11.3682	6.8 kOhm 1%, 0.25W, MF	
	R....74	57.11.3682	6.8 kOhm 1%, 0.25W, MF	
	R....75	58.01.8503	50 kOhm 10%, 0.5 W, PCerm	
	R....76	57.11.3822	8.2 kOhm 1%, 0.25W, MF	
	R....77	57.11.3203	20 kOhm 1%, 0.25W, MF	
	R....78	57.11.3203	20 kOhm 1%, 0.25W, MF	
	R....79	57.11.3103	10 kOhm 1%, 0.25W, MF	
	R....80	57.11.3203	20 kOhm 1%, 0.25W, MF	
	R....81	57.11.3103	10 kOhm 1%, 0.25W, MF	
	R....82	57.11.3332	3.3 kOhm 1%, 0.25W, MF	
	R....83	57.11.3472	4.7 kOhm 1%, 0.25W, MF	
	R....84	57.11.3182	1.8 kOhm 1%, 0.25W, MF	
	R....85	57.11.3151	150 Ohm 1%, 0.25W, MF	
	R....86	57.11.3202	2 kOhm 1%, 0.25W, MF	
	R....87	57.11.3751	750 Ohm 1%, 0.25W, MF	
	R....88	57.11.3153	15 kOhm 1%, 0.25W, MF	
	R....89	57.11.3332	3.3 kOhm 1%, 0.25W, MF	
	R....90	58.01.8503	50 kOhm 10%, 0.5 W, PCerm	
	R...101	57.11.3391	390 Ohm 1%, 0.25W, MF	
	R...102	57.11.3391	390 Ohm 1%, 0.25W, MF	
	R...103	57.11.3391	390 Ohm 1%, 0.25W, MF	
	R...104	57.11.3391	390 Ohm 1%, 0.25W, MF	
	R...105	57.11.3391	390 Ohm 1%, 0.25W, MF	
	R...106	57.11.3391	390 Ohm 1%, 0.25W, MF	
	R...107	57.11.3391	390 Ohm 1%, 0.25W, MF	
	R...108	57.11.3391	390 Ohm 1%, 0.25W, MF	
	R...109	57.11.3391	390 Ohm 1%, 0.25W, MF	
	R...110	57.11.3102	1 kOhm 1%, 0.25W, MF	
	R...111	57.11.3102	1 kOhm 1%, 0.25W, MF	
	S.....6	55.15.0130	Push button Switch	ITT
	W....46	64.01.0106	Wire Bridge	
	XB....1	53.04.0123	Lamp holder	
	XB....2	53.04.0123	Lamp holder	
	XB....3	53.04.0123	Lamp holder	
	XB....4	53.04.0123	Lamp holder	
	XIC...1	53.03.0168	16-Pole IC Socket	
	XIC...2	53.03.0168	16-Pole IC Socket	
	XIC...3	53.03.0166	8-Pole IC Socket	
	XIC...4	53.03.0166	8-Pole IC Socket	
	XIC...5	53.03.0167	14-Pole IC Socket	
	XIC...6	53.03.0168	16-Pole IC Socket	
	XIC...7	53.03.0168	16-Pole IC Socket	
	XIC...8	53.03.0166	8-Pole IC Socket	
	XIC...9	53.03.0166	8-Pole IC Socket	
	XIC..10	53.03.0167	14-Pole IC Socket	
	XIC..12	53.03.0168	16-Pole IC Socket	
	XIC..13	53.03.0168	16-Pole IC Socket	

CER=Ceramic, EL=Electrolytic, PETP=Polyester, SI=Silicon,
MF=Metal Film, PCerm=Pot. Cermet,
MANUFACTURER: AMP, GI=General Instrument, ITT, Mot=Motorola,
NS=National Semiconductor , Ph=Philips, Ra=Raytheon,
TI=Texas Instruments

1.727.664.83 COMMAND PANEL BOARD 2VU PBO GP 91/08/2600

(for circuit diagram and components layout see under 1.727.662.83)

COMMAND PANEL BOARD 1VU PBO (1CH) 1.727.665.83

Ad	..POS..	...REF.No...	DESCRIPTION				MANUFACTURER
	A.....1	1.727.370.00	Display Board				
	A.....2	1.727.180.00	Shuttle Control				
	B.....1	51.02.0144	6 V	0.03 A		Lamp	
	B.....2	51.02.0144	6 V	0.03 A		Lamp	
	C.....1	59.06.0683	68 nF	10%	50 V	PETP	
	C.....2	59.22.3221	220 uF	-20%	10 V	EL	
	C.....3	59.22.3221	220 uF	-20%	10 V	EL	
	C.....4	59.22.3102	1000 uF	-20%	10 V	EL	
	C.....5	59.22.5220	22 uF	-20%	25 V	EL	
	C.....6	59.22.5220	22 uF	-20%	25 V	EL	
	C....11	59.22.6100	10 uF	-20%	25 V	EL	
	C....12	59.34.2220	22 pF	10%	50 V	CER	
	C....13	59.06.0105	1 uF	10%	50 V	PETP	
	C....15	59.06.0683	68 nF	10%	50 V	PETP	
	C....25	59.06.0683	68 nF	10%	50 V	PETP	
	C....26	59.45.4101	100 pF	10%	50 V	CER	
	C....27	00.00.0000		not used			
	C....28	59.45.4101	100 pF	10%	50 V	CER	
	C....29	00.00.0000		not used			
	C....30	59.45.4101	100 pF	10%	50 V	CER	
	C....31	59.45.4101	100 pF	10%	50 V	CER	
	D.....1	50.04.0512	1N5818		30 V	Schottky	
	D....11	50.04.0125	1N4448		50 V	SI	
	D....12	50.04.0125	1N4448		50 V	SI	
	D....13	50.04.0125	1N4448		50 V	SI	
	D....14	50.04.0125	1N4448		50 V	SI	
	D....30	50.04.0125	1N4448		50 V	SI	
	D....31	50.04.0125	1N4448		50 V	SI	
	D....32	50.04.0125	1N4448		50 V	SI	
	D....33	50.04.0125	1N4448		50 V	SI	
	D....34	50.04.0125	1N4448		50 V	SI	
	D....35	50.04.0125	1N4448		50 V	SI	
	D....36	50.04.0125	1N4448		50 V	SI	
	D....37	50.04.0125	1N4448		50 V	SI	
	DL....7	50.04.2501	MV5452	LED grn D=5 mm			GI
	DL....8	50.04.2500	MV5352	LED yel D=5 mm			GI
	DL....9	50.04.2500	MV5352	LED yel D=5 mm			GI
	DL...10	50.04.2500	MV5352	LED yel D=5 mm			GI
	DL...11	50.04.2500	MV5352	LED yel D=5 mm			GI
	DL...12	50.04.2500	MV5352	LED yel D=5 mm			GI
	DL...13	50.04.2500	MV5352	LED yel D=5 mm			GI
	DL...14	50.04.2500	MV5352	LED yel D=5 mm			GI
	DL...15	50.04.2500	MV5352	LED yel D=5 mm			GI
	DL...16	50.04.2500	MV5352	LED yel D=5 mm			GI
	DL...17	50.04.2500	MV5352	LED yel D=5 mm			GI
	DL...41	50.04.2500	MV5352	LED yel D=5 mm			GI
	DL...42	50.04.2501	MV5452	LED grn D=5 mm			GI
	DL...43	50.04.2500	MV5352	LED yel D=5 mm			GI
	DL...44	50.04.2115	MV5752	LED red D=5 mm			GI
	DL...45	50.04.2500	MV5352	LED yel D=5 mm			GI
	DL...46	50.04.2500	MV5352	LED yel D=5 mm			GI
	DL...47	50.04.2115	MV5752	LED red D=5 mm			GI
	DL...48	50.04.2501	MV5452	LED grn D=5 mm			GI
	DL...61	50.04.2119	MV57124	LED red 6.35*3.81			GI
	DL...62	50.04.2119	MV57124	LED red 6.35*3.81			GI
	DL...63	50.04.2119	MV57124	LED red 6.35*3.81			GI
	IC....1	50.17.1595	74HC595	8-Bit Shift Register			TI
	IC....2	50.17.1595	74HC595	8-Bit Shift Register			TI
	IC....3	50.09.0107	RC4559	Dual Op. Amp.			Ra
	IC....4	50.09.0107	RC4559	Dual Op. Amp.			Ra
	IC....5	50.05.0199	LM324	Quad Op. Amp.			NS,Mot
	IC....6	50.17.1595	74HC595	8-Bit Shift Register			TI
	IC...12	50.06.0596	74LS596	8-Bit Shift Register O.C.			TI
	IC...13	50.17.1595	74HC595	8-Bit Shift Register			TI
	J.....1	54.01.0287	3-Pole	CIS Socket Strip			AMP
	J.....2	54.01.0288	5-Pole	CIS Socket Strip			AMP
	J.....3	54.01.0237	20-Pole	CIS Socket Strip			AMP
	J.....4	54.01.0237	20-Pole	CIS Socket Strip			AMP
	JP....6	54.01.0021		Bridge			
	JP...10	54.01.0021		Bridge			
	JP...11	54.01.0021		Bridge			
	JP...12	54.01.0021		Bridge			
	JP...13	54.01.0021		Bridge			
	JP...14	54.01.0021		Bridge			
	JP...15	54.01.0021		Bridge			
	JP...16	54.01.0021		Bridge			
	JP...17	54.01.0021		Bridge			
	JP...41	54.01.0021		Bridge			
	JP...42	54.01.0021		Bridge			
	JP...43	54.01.0021		Bridge			
	JP...46	00.00.0000		not used			
	JP...48	54.01.0021		Bridge			
	ME....1	1.727.360.01		VU Meter			
	MP....1	54.01.0020	39 pcs	Contact Pin			
	MP....2	1.011.235.03	3 pcs	Push button case 3*			
	MP....4	1.011.235.05	2 pcs	Push button case 5*			
	MP....5	1.011.235.23	3 pcs	Conductive rubber 3*			
	MP....7	1.011.235.25	2 pcs	Conductive rubber 5*			
	MP....8	1.011.235.29	25 pcs	Bolt			
	MP....9	1.011.235.30	20 pcs	Push button 14*5			
	MP...10	1.011.235.31	6 pcs	Dummy calotte			
	MP...11	1.011.235.32	2 pcs	Calotte red			
	MP...12	1.011.235.33	14 pcs	Calotte yel			
	MP...13	1.011.235.34	3 pcs	Calotte grn			
	MP...14	1.727.360.02	1 pce	Push button case with Shuttle			
	MP...15	1.727.360.03	1 pce	Conductive rubber with Shuttle			
	MP...16	1.727.360.04	5 pcs	Push button 19*14			
	MP...17	1.727.360.05	1 pce	Push button Adj.			
	MP...18	1.727.665.10	1 pce	No. Label			
	MP...19	1.727.660.13	1 pce	Command Panel PCB			
	MP...20	53.03.0221	22 pcs	2-pole LED Socket			
	MP...21	1.727.362.93	1 pce	L-LST Command Panel Board			
	MP...22	21.53.0354	2 pcs	Hexagon socket head cap screw M3*6			
	MP...23	23.01.2032	2 pcs	Washer			
	MP...24	24.16.1030	2 pcs	Fin washer			
	MP...25	43.01.0108	1 pce	ESE Warning label			
	MP...26	1.727.360.07	1 pce	Push button label , PLAY			
	MP...27	1.727.360.08	1 pce	Push button label , STOP			
	MP...28	1.727.364.02	1 pce	Push button label , blank (for S18)			
	MP...29	1.727.360.19	2 pcs	Push button labels, FORWARD,REWIND			
	MP...30	1.011.235.35	1 pce	Dummy push button 19*5 (S49)			
	P.....1	54.02.0320		Plug 2.8*0.8			AMP
	P.....2	54.02.0320		Plug 2.8*0.8			AMP
	P.....3	54.02.0320		Plug 2.8*0.8			AMP
	Q.....1	50.03.0436	BC237B	BC547B, BC550B		NPN	
	Q.....2	50.03.0436	BC237B	BC547B, BC550B		NPN	
	Q.....3	50.03.0436	BC237B	BC547B, BC550B		NPN	
	R.....1	57.11.3391	390 Ohm	1%, 0.25W, MF			
	R.....2	57.11.3391	390 Ohm	1%, 0.25W, MF			
	R.....3	57.11.3391	390 Ohm	1%, 0.25W, MF			
	R.....4	57.11.3391	390 Ohm	1%, 0.25W, MF			
	R.....5	57.11.3391	390 Ohm	1%, 0.25W, MF			
	R.....6	57.11.3391	390 Ohm	1%, 0.25W, MF			
	R.....7	57.11.3391	390 Ohm	1%, 0.25W, MF			
	R.....8	57.11.3391	390 Ohm	1%, 0.25W, MF			
	R.....9	57.11.3391	390 Ohm	1%, 0.25W, MF			
	R....10	57.11.3391	390 Ohm	1%, 0.25W, MF			
	R....11	57.11.3391	390 Ohm	1%, 0.25W, MF			
	R....12	57.11.3391	390 Ohm	1%, 0.25W, MF			
	R....15	57.11.3102	1 kOhm	1%, 0.25W, MF			
	R....25	57.11.3391	390 Ohm	1%, 0.25W, MF			
	R....26	57.11.3391	390 Ohm	1%, 0.25W, MF			
	R....27	57.11.3391	390 Ohm	1%, 0.25W, MF			
	R....28	57.11.3272	2.7 kOhm	1%, 0.25W, MF			
	R....29	57.11.3474	470 kOhm	1%, 0.25W, MF			
	R....30	57.11.3153	15 kOhm	1%, 0.25W, MF			
	R....31	57.11.3682	6.8 kOhm	1%, 0.25W, MF			
	R....32	57.11.3153	15 kOhm	1%, 0.25W, MF			
	R....33	57.11.3682	6.8 kOhm	1%, 0.25W, MF			
	R....34	57.11.3682	6.8 kOhm	1%, 0.25W, MF			
	R....35	58.01.8503	50 kOhm	10%, 0.5 W, PCerm			
	R....36	57.11.3822	8.2 kOhm	1%, 0.25W, MF			
	R....37	57.11.3203	20 kOhm	1%, 0.25W, MF			
	R....38	57.11.3203	20 kOhm	1%, 0.25W, MF			
	R....39	57.11.3103	10 kOhm	1%, 0.25W, MF			
	R....40	57.11.3203	20 kOhm	1%, 0.25W, MF			
	R....41	57.11.3103	10 kOhm	1%, 0.25W, MF			
	R....42	57.11.3332	3.3 kOhm	1%, 0.25W, MF			
	R....43	57.11.3472	4.7 kOhm	1%, 0.25W, MF			
	R....44	57.11.3182	1.8 kOhm	1%, 0.25W, MF			
	R....45	57.11.3151	150 Ohm	1%, 0.25W, MF			
	R....46	57.11.3202	2 kOhm	1%, 0.25W, MF			
	R....47	57.11.3751	750 Ohm	1%, 0.25W, MF			
	R....48	57.11.3153	15 kOhm	1%, 0.25W, MF			
	R....49	57.11.3332	3.3 kOhm	1%, 0.25W, MF			
	R....50	58.01.8503	50 kOhm	10%, 0.5 W, PCerm			
	R....55	57.11.3102	1 kOhm	1%, 0.25W, MF			
	R...101	57.11.3391	390 Ohm	1%, 0.25W, MF			
	R...102	57.11.3391	390 Ohm	1%, 0.25W, MF			
	R...103	57.11.3391	390 Ohm	1%, 0.25W, MF			
	R...104	57.11.3391	390 Ohm	1%, 0.25W, MF			
	R...105	57.11.3391	390 Ohm	1%, 0.25W, MF			
	R...106	57.11.3391	390 Ohm	1%, 0.25W, MF			
	R...107	57.11.3391	390 Ohm	1%, 0.25W, MF			
	R...108	57.11.3391	390 Ohm	1%, 0.25W, MF			
	R...110	57.11.3102	1 kOhm	1%, 0.25W, MF			
	R...111	57.11.3102	1 kOhm	1%, 0.25W, MF			
	S.....6	55.15.0130		Push button Switch			ITT
	W....46	64.01.0106		Wire Bridge			
	XB....1	53.04.0123		Lamp holder			
	XB....2	53.04.0123		Lamp holder			
	XIC...1	53.03.0168	16-Pole	IC Socket			
	XIC...2	53.03.0168	16-Pole	IC Socket			
	XIC...3	53.03.0166	8-Pole	IC Socket			
	XIC...4	53.03.0166	8-Pole	IC Socket			
	XIC...5	53.03.0167	14-Pole	IC Socket			
	XIC...6	53.03.0168	16-Pole	IC Socket			
	XIC..12	53.03.0168	16-Pole	IC Socket			
	XIC..13	53.03.0168	16-Pole	IC Socket			

COMMAND PANEL BOARD 1VU PBO (2CH) 1.727.665.83

```
Ad  ..POS..  ...REF.No...     DESCRIPTION.............................MANUFACTURER


CER=Ceramic, EL=Electrolytic, PETP=Polyester, SI=Silicon,
MF=Metal Film, PCerm=Pot. Cermet,
MANUFACTURER: AMD, GI=General Instrument, ITT, Mot=Motorola,
              NS=National Semiconductor , Ph=Philips, Ra=Raytheon,
              TI=Texas Instruments

             1.727.665.83  COMMAND PANEL BOARD 1VU PBO   GP 91/08/2600

 END
→
```

COMMAND PANEL BOARD 0VU (4CH) 1.727.666.83

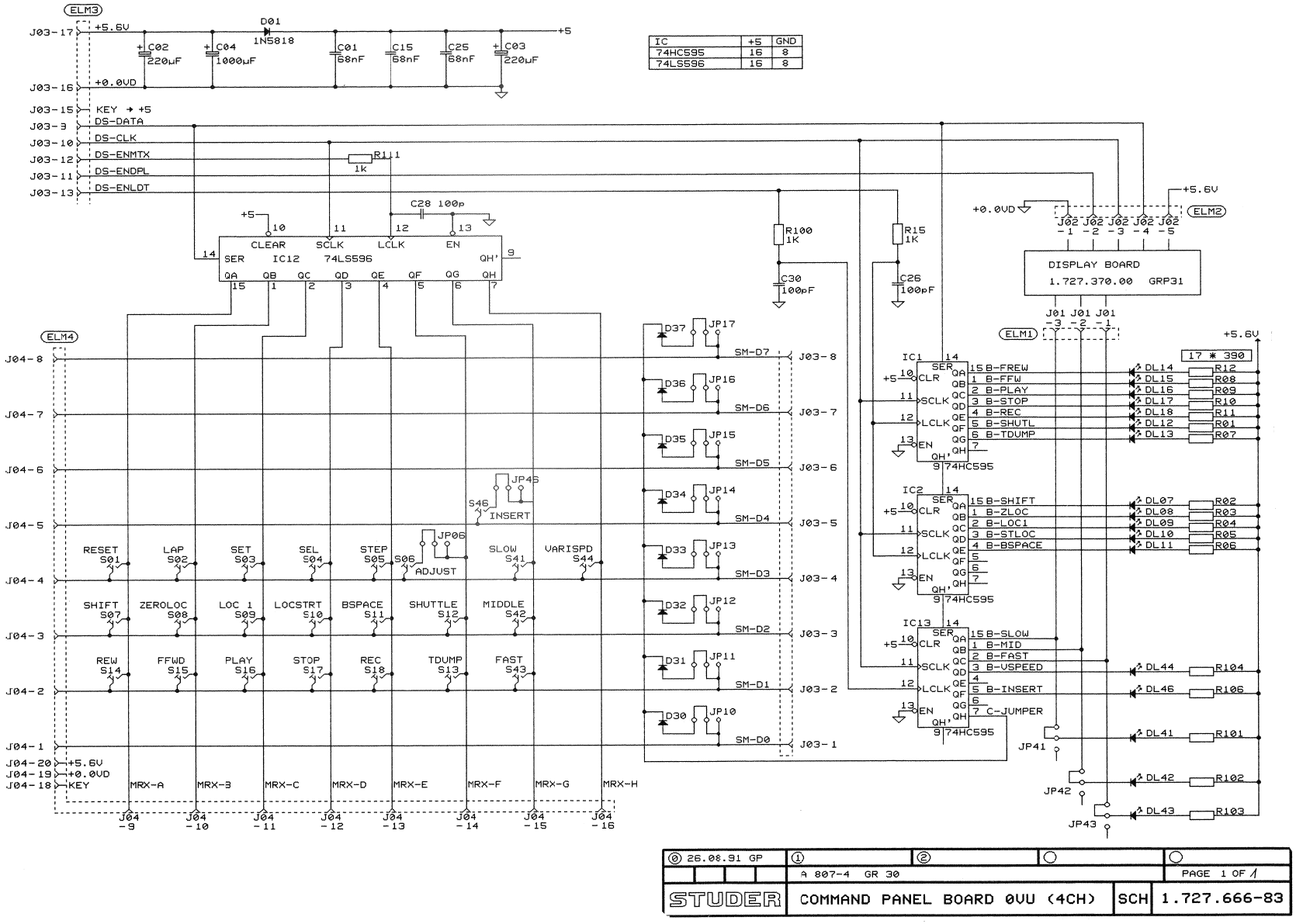

(for components layout see under 1.727.662.83)

COMMAND PANEL BOARD 0VU (4CH) 1.727.666.83

IND.	POS.NO.	PART NO.	VALUE	SPECIFICATIONS / EQUIVALENT	MANUF.
	A....1	1.727.370.00		Display Board	
	A....2	1.727.180.00		Shuttle Control	
	C....1	59.06.0683	68 nF	10% 50 V PETP	
	C....2	59.22.3221	220 uF	-20% 10 V EL	
	C....3	59.22.3221	220 uF	-20% 10 V EL	
	C....4	59.22.3102	1000 uF	-20% 10 V EL	
	C....25	59.06.0683	68 nF	10% 50 V PETP	
	C....26	59.45.4101	100 pF	10% 50 V CER	
	C....27			not used	
	C....28	59.45.4101	100 pF	10% 50 V CER	
	C....29			not used	
	C....30	59.45.4101	100 pF	10% 50 V CER	
	D....1	50.04.0512	1N5818	30 V Schottky	
	D....30	50.04.0125	1N4448	50 V SI	
	D....31	50.04.0125	1N4448	50 V SI	
	D....32	50.04.0125	1N4448	50 V SI	
	D....33	50.04.0125	1N4448	50 V SI	
	D....34	50.04.0125	1N4448	50 V SI	
	D....35	50.04.0125	1N4448	50 V SI	
	D....36	50.04.0125	1N4448	50 V SI	
	D....37	50.04.0125	1N4448	50 V SI	
	DL....7	50.04.2501	MV5452	LED grn D=5 mm	GI
	DL....8	50.04.2500	MV5352	LED yel D=5 mm	GI
	DL....9	50.04.2500	MV5352	LED yel D=5 mm	GI
	DL...10	50.04.2500	MV5352	LED yel D=5 mm	GI
	DL...11	50.04.2500	MV5352	LED yel D=5 mm	GI
	DL...12	50.04.2500	MV5352	LED yel D=5 mm	GI
	DL...13	50.04.2500	MV5352	LED yel D=5 mm	GI
	DL...14	50.04.2500	MV5352	LED yel D=5 mm	GI
	DL...15	50.04.2500	MV5352	LED yel D=5 mm	GI
	DL...16	50.04.2500	MV5352	LED yel D=5 mm	GI
	DL...17	50.04.2500	MV5352	LED yel D=5 mm	GI
	DL...18	50.04.2115	MV5752	LED red D=5 mm	GI
	DL...41	50.04.2501	MV5452	LED grn D=5 mm	GI

IND.	POS.NO.	PART NO.	VALUE	SPECIFICATIONS / EQUIVALENT	MANUF.
	DL...42	50.04.2500	MV5352	LED yel D=5 mm	GI
	DL...43	50.04.2500	MV5352	LED yel D=5 mm	GI
	DL...44	50.04.2115	MV5752	LED red D=5 mm	GI
	DL...46	50.04.2501	MV5452	LED grn D=5 mm	GI
	IC....1	50.17.1595	74HC595	8-Bit Shift Register	TI
	IC....2	50.17.1595	74HC595	8-Bit Shift Register	TI
	IC...12	50.06.0596	74LS596	8-Bit Shift Register O.C.	TI
	IC...13	50.17.1595	74HC595	8-Bit Shift Register	TI
	J....1	54.01.0287	3-Pole	CIS Socket Strip	AMP
	J....2	54.01.0288	5-Pole	CIS Socket Strip	AMP
	J....3	54.01.0237	20-Pole	CIS Socket Strip	AMP
	J....4	54.01.0237	20-Pole	CIS Socket Strip	AMP
	JP....6	54.01.0021		Bridge	
	JP...10	54.01.0021		Bridge	
	JP...11	54.01.0021		Bridge	
	JP...12	54.01.0021		Bridge	
	JP...13	54.01.0021		Bridge	
	JP...14	54.01.0021		Bridge	
	JP...15	54.01.0021		Bridge	
	JP...16	54.01.0021		Bridge	
	JP...17	54.01.0021		Bridge	
	JP...41	54.01.0021		Bridge	
	JP...42	54.01.0021		Bridge	
	JP...43	54.01.0021		Bridge	
	JP...46	54.01.0021		Bridge	
	JP...48			not used	
	MP....1	54.01.0020	42 pcs	Contact Pin	
	MP....2	1.011.235.03	2 pcs	Push button case 3*	
	MP....4	1.011.235.05	2 pcs	Push button case 5*	
	MP....5	1.011.235.23	2 pcs	Conductive rubber 3*	
	MP....7	1.011.235.25	2 pcs	Conductive rubber 5*	
	MP....8	1.011.235.29	22 pcs	Bolt	
	MP....9	1.011.235.30	17 pcs	Push button J4*5	

IND.	POS.NO.	PART NO.	VALUE	SPECIFICATIONS / EQUIVALENT	MANUF.
	MP...10	1.011.235.31	5 pcs	Dummy calotte	
	MP...11	1.011.235.32	5 pcs	Calotte red	
	MP...12	1.011.235.33	12 pcs	Calotte yel	
	MP...13	1.011.235.34	5 pcs	Calotte grn	
	MP...14	1.727.360.02	1 pcs	Push button case with Shuttle	
	MP...15	1.727.360.03	1 pcs	Conductive rubber with Shuttle	
	MP...16	1.727.360.04	5 pcs	Push button 19*14	
	MP...17	1.727.360.05	1 pcs	Push button Adj.	
	MP...18	1.727.666.10	1 pcs	No. Label	
	MP...19	1.727.660.13	1 pcs	Command Panel PCB	
	MP...20	53.03.0221	17 pcs	2-pole LED Socket	
	MP...22	21.53.0354	2 pcs	Hexagon socket head cap screw M3*6	
	MP...23	23.01.2032	2 pcs	Washer	
	MP...24	24.16.1030	2 pcs	Fix washer	
	MP...25	43.01.0108	1 pcs	ESE Warning label	
	MP...26	1.727.360.07	1 pcs	Push button label , PLAY	
	MP...27	1.727.360.08	1 pcs	Push button label , STOP	
	MP...28	1.727.360.09	1 pcs	Push button label , RECORD	
	MP...29	1.727.360.19	2 pcs	Push button labels, FORWARD,REWIND	
	MP...30	1.011.235.35	1 pcs	Dummy push button 19*5	
	R....1	57.11.3391	390 Ohm	1%, 0.25W, MF	
	R....2	57.11.3391	390 Ohm	1%, 0.25W, MF	
	R....3	57.11.3391	390 Ohm	1%, 0.25W, MF	
	R....4	57.11.3391	390 Ohm	1%, 0.25W, MF	
	R....5	57.11.3391	390 Ohm	1%, 0.25W, MF	
	R....6	57.11.3391	390 Ohm	1%, 0.25W, MF	
	R....7	57.11.3391	390 Ohm	1%, 0.25W, MF	
	R....8	57.11.3391	390 Ohm	1%, 0.25W, MF	
	R....9	57.11.3391	390 Ohm	1%, 0.25W, MF	
	R...10	57.11.3391	390 Ohm	1%, 0.25W, MF	
	R...11	57.11.3391	390 Ohm	1%, 0.25W, MF	
	R...12	57.11.3391	390 Ohm	1%, 0.25W, MF	
	R...15	57.11.3102	1 kOhm	1%, 0.25W, MF	
	R...101	57.11.3391	390 Ohm	1%, 0.25W, MF	
	R...102	57.11.3391	390 Ohm	1%, 0.25W, MF	
	R...103	57.11.3391	390 Ohm	1%, 0.25W, MF	

IND.	POS.NO.	PART NO.	VALUE	SPECIFICATIONS / EQUIVALENT	MANUF.
	R...104	57.11.3391	390 Ohm	1%, 0.25W, MF	
	R...106	57.11.3391	390 Ohm	1%, 0.25W, MF	
	R...110	57.11.3102	1 kOhm	1%, 0.25W, MF	
	R...111	57.11.3102	1 kOhm	1%, 0.25W, MF	
	S.....6	55.15.0130		Push button Switch	ITT
	W....46			not used	
	XIC...1	53.03.0168	16-Pole	IC Socket	
	XIC...2	53.03.0168	16-Pole	IC Socket	
	XIC..12	53.03.0168	16-Pole	IC Socket	
	XIC..13	53.03.0168	16-Pole	IC Socket	

CER=Ceramic, EL=Electrolytic, PETP=Polyester, SI=Silicon,
MF=Metal Film, PCer=Pot. Cermet,
MANUFACTURER: AMP, GI=General Instrument, ITT, Mot=Motorola,
NS=National Semiconductor , Ph=Philips, Ra=Raytheon,
TI=Texas Instruments

ORIG 91/08/26

(for circuit diagram and components layout see under 1.727.662.83)

COMMAND PANEL BOARD UNCAL PBO (2CH) 1.727.667.83

Ad	..POS..	...REF.No...	DESCRIPTION	MANUFACTURER
	A.....1	1.727.370.00	Display Board	
	A.....2	1.727.180.00	Shuttle Control	
	C.....1	59.06.0683	68 nF 10% 50 V PETP	
	C.....2	59.22.3221	220 uF 20% 10 V EL	
	C.....3	59.22.3221	220 uF -20% 10 V EL	
	C.....4	59.22.3102	1000 uF -20% 10 V EL	
	C....15	59.06.0683	68 nF 10% 50 V PETP	
	C....25	59.06.0683	68 nF 10% 50 V PETP	
	C....26	59.45.4101	100 pF 10% 50 V CER	
	C....27	00.00.0000	not used	
	C....28	59.45.4101	100 pF 10% 50 V CER	
	C....29	00.00.0000	not used	
	C....30	59.45.4101	100 pF 10% 50 V CER	
	C....31	59.45.4101	100 pF 10% 50 V CER	
	D.....1	50.04.0512	1N5818 30 V Schottky	
	D....30	50.04.0125	1N4448 50 V SI	
	D....31	50.04.0125	1N4448 50 V SI	
	D....32	50.04.0125	1N4448 50 V SI	
	D....33	50.04.0125	1N4448 50 V SI	
	D....34	50.04.0125	1N4448 50 V SI	
	D....35	50.04.0125	1N4448 50 V SI	
	D....36	50.04.0125	1N4448 50 V SI	
	D....37	50.04.0125	1N4448 50 V SI	
	DL....7	50.04.2501	MV5452 LED grn D=5 mm	GI
	DL....8	50.04.2500	MV5352 LED yel D=5 mm	GI
	DL....9	50.04.2500	MV5352 LED yel D=5 mm	GI
	DL...10	50.04.2500	MV5352 LED yel D=5 mm	GI
	DL...11	50.04.2500	MV5352 LED yel D=5 mm	GI
	DL...12	50.04.2500	MV5352 LED yel D=5 mm	GI
	DL...13	50.04.2500	MV5352 LED yel D=5 mm	GI
	DL...14	50.04.2500	MV5352 LED yel D=5 mm	GI
	DL...15	50.04.2500	MV5352 LED yel D=5 mm	GI
	DL...16	50.04.2500	MV5352 LED yel D=5 mm	GI
	DL...17	50.04.2500	MV5352 LED yel D=5 mm	GI
	DL...41	50.04.2500	MV5352 LED yel D=5 mm	GI
	DL...42	50.04.2501	MV5452 LED grn D=5 mm	GI
	DL...43	50.04.2500	MV5352 LED yel D=5 mm	GI
	DL...44	50.04.2115	MV5752 LED red D=5 mm	GI
	DL...45	50.04.2500	MV5352 LED yel D=5 mm	GI
	DL...46	50.04.2500	MV5352 LED yel D=5 mm	GI
	DL...47	50.04.2115	MV5752 LED red D=5 mm	GI
	DL...48	50.04.2501	MV5452 LED grn D=5 mm	GI
	DL...49	50.04.2115	MV5752 LED red D=5 mm	GI
	IC....1	50.17.1595	74HC595 8-Bit Shift Register	TI
	IC....2	50.17.1595	74HC595 8-Bit Shift Register	TI
	IC....6	50.17.1595	74HC595 8-Bit Shift Register	TI
	IC....7	50.17.1595	74HC595 8-Bit Shift Register	TI
	IC...12	50.06.0596	74LS596 8-Bit Shift Register O.C.	TI
	IC...13	50.17.1595	74HC595 8-Bit Shift Register	TI
	J.....1	54.01.0287	3-Pole CIS Socket Strip	AMP
	J.....2	54.01.0288	5-Pole CIS Socket Strip	AMP
	J.....3	54.01.0237	20-Pole CIS Socket Strip	AMP
	J.....4	54.01.0237	20-Pole CIS Socket Strip	AMP
	JP....6	54.01.0021	Bridge	
	JP...10	54.01.0021	Bridge	
	JP...11	54.01.0021	Bridge	
	JP...12	54.01.0021	Bridge	
	JP...13	54.01.0021	Bridge	
	JP...14	54.01.0021	Bridge	
	JP...15	54.01.0021	Bridge	
	JP...16	54.01.0021	Bridge	
	JP...17	54.01.0021	Bridge	
	JP...41	54.01.0021	Bridge	
	JP...42	54.01.0021	Bridge	
	JP...43	54.01.0021	Bridge	
	JP...46	00.00.0000	not used	
	JP...48	54.01.0021	Bridge	
	MP....1	54.01.0020	39 pcs Contact Pin	
	MP....2	1.011.235.03	3 pcs Push button case 3*	
	MP....4	1.011.235.05	2 pcs Push button case 5*	
	MP....5	1.011.235.23	3 pcs Conductive rubber 3*	
	MP....7	1.011.235.25	2 pcs Conductive rubber 5*	
	MP....8	1.011.235.29	26 pcs Bolt	
	MP....9	1.011.235.30	21 pcs Push button 14*5	
	MP...10	1.011.235.31	6 pcs Dummy calotte	
	MP...11	1.011.235.32	3 pcs Calotte red	
	MP...12	1.011.235.33	14 pcs Calotte yel	
	MP...13	1.011.235.34	3 pcs Calotte grn	
	MP...14	1.727.360.02	1 pce Push button case with Shuttle	
	MP...15	1.727.360.03	1 pce Conductive rubber with Shuttle	
	MP...16	1.727.360.04	5 pcs Push button 19*14	
	MP...17	1.727.360.05	1 pce Push button Adj.	
	MP...18	1.727.667.10	1 pce No. Label	
	MP...19	1.727.660.13	1 pce Command Panel PCB	
	MP...20	53.03.0221	20 pcs 2-pole LED Socket	
	MP...22	21.53.0354	2 pcs Hexagon socket head cap screw M3*6	
	MP...23	23.01.2032	2 pcs Washer	
	MP...24	24.16.1030	2 pcs Fin washer	

Ad	..POS..	...REF.No...	DESCRIPTION	MANUFACTURER
	MP...25	43.01.0108	1 pcs ESE Warning label	
	MP...26	1.727.360.07	1 pce Push button label , PLAY	
	MP...27	1.727.360.08	1 pce Push button label , STOP	
	MP...28	1.727.364.02	1 pce Push button label , blank (for S18)	
	MP...29	1.727.360.19	2 pcs Push button labels, FORWARD,REWIND	
	R.....1	57.11.3391	390 Ohm 1%, 0.25W, MF	
	R.....2	57.11.3391	390 Ohm 1%, 0.25W, MF	
	R.....3	57.11.3391	390 Ohm 1%, 0.25W, MF	
	R.....4	57.11.3391	390 Ohm 1%, 0.25W, MF	
	R.....5	57.11.3391	390 Ohm 1%, 0.25W, MF	
	R.....6	57.11.3391	390 Ohm 1%, 0.25W, MF	
	R.....7	57.11.3391	390 Ohm 1%, 0.25W, MF	
	R.....8	57.11.3391	390 Ohm 1%, 0.25W, MF	
	R.....9	57.11.3391	390 Ohm 1%, 0.25W, MF	
	R....10	57.11.3391	390 Ohm 1%, 0.25W, MF	
	R....11	57.11.3391	390 Ohm 1%, 0.25W, MF	
	R....12	57.11.3391	390 Ohm 1%, 0.25W, MF	
	R....15	57.11.3102	1 kOhm 1%, 0.25W, MF	
	R....55	57.11.3102	1 kOhm 1%, 0.25W, MF	
	R...101	57.11.3391	390 Ohm 1%, 0.25W, MF	
	R...102	57.11.3391	390 Ohm 1%, 0.25W, MF	
	R...103	57.11.3391	390 Ohm 1%, 0.25W, MF	
	R...104	57.11.3391	390 Ohm 1%, 0.25W, MF	
	R...105	57.11.3391	390 Ohm 1%, 0.25W, MF	
	R...106	57.11.3391	390 Ohm 1%, 0.25W, MF	
	R...107	57.11.3391	390 Ohm 1%, 0.25W, MF	
	R...108	57.11.3391	390 Ohm 1%, 0.25W, MF	
	R...109	57.11.3391	390 Ohm 1%, 0.25W, MF	
	R...110	57.11.3102	1 kOhm 1%, 0.25W, MF	
	R...111	57.11.3102	1 kOhm 1%, 0.25W, MF	
	S.....6	55.15.0130	Push button Switch	ITT
	W....46	64.01.0106	Wire Bridge	
	XIC...1	53.03.0168	16-Pole IC Socket	
	XIC...2	53.03.0168	16-Pole IC Socket	
	XIC...6	53.03.0168	16-Pole IC Socket	
	XIC...7	53.03.0168	16-Pole IC Socket	
	XIC..12	53.03.0168	16-Pole IC Socket	
	XIC..13	53.03.0168	16-Pole IC Socket	

CER=Ceramic, EL=Electrolytic, PETP=Polyester, SI=Silicon,
MF=Metal Film, PCerm=Pot. Cermet,
MANUFACTURER: AMP, GI=General Instrument, ITT, Mot=Motorola,
NS=National Semiconductor , Ph=Philips, Ra=Raytheon,
TI=Texas Instruments

1.727.667.83 COMMAND PANEL BOARD UNCAL PBO GP 91/08/2600

END

(for circuit diagram and components layout see under 1.727.662.83)

COMMAND PANEL BOARD UNCAL BOARD MONO PBO (1CH) 1.727.668.83

Ad	..POS..	...REF.No...	DESCRIPTION	MANUFACTURER
	A.....1	1.727.370.00	Display Board	
	A.....2	1.727.180.00	Shuttle Control	
	C.....1	59.06.0683	68 nF 10% 50 V PETP	
	C.....2	59.22.3221	220 uF -20% 10 V EL	
	C.....3	59.22.3221	220 uF -20% 10 V EL	
	C.....4	59.22.3102	1000 uF -20% 10 V EL	
	C....15	59.06.0683	68 nF 10% 50 V PETP	
	C....25	59.06.0683	68 nF 10% 50 V PETP	
	C....26	59.45.4101	100 pF 10% 50 V CER	
	C....27	00.00.0000	not used	
	C....28	59.45.4101	100 pF 10% 50 V CER	
	C....29	00.00.0000	not used	
	C....30	59.45.4101	100 pF 10% 50 V CER	
	C....31	59.45.4101	100 pF 10% 50 V CER	
	D.....1	50.04.0512	1N5818 30 V Schottky	
	D....30	50.04.0125	1N4448 50 V SI	
	D....31	50.04.0125	1N4448 50 V SI	
	D....32	50.04.0125	1N4448 50 V SI	
	D....33	50.04.0125	1N4448 50 V SI	
	D....34	50.04.0125	1N4448 50 V SI	
	D....35	50.04.0125	1N4448 50 V SI	
	D....36	50.04.0125	1N4448 50 V SI	
	D....37	50.04.0125	1N4448 50 V SI	
	DL....7	50.04.2501	MV5452 LED grn D=5 mm	GI
	DL....8	50.04.2500	MV5352 LED yel D=5 mm	GI
	DL....9	50.04.2500	MV5352 LED yel D=5 mm	GI
	DL...10	50.04.2500	MV5352 LED yel D=5 mm	GI
	DL...11	50.04.2500	MV5352 LED yel D=5 mm	GI
	DL...12	50.04.2500	MV5352 LED yel D=5 mm	GI
	DL...13	50.04.2500	MV5352 LED yel D=5 mm	GI
	DL...14	50.04.2500	MV5352 LED yel D=5 mm	GI
	DL...15	50.04.2500	MV5352 LED yel D=5 mm	GI
	DL...16	50.04.2500	MV5352 LED yel D=5 mm	GI
	DL...17	50.04.2500	MV5352 LED yel D=5 mm	GI
	DL...41	50.04.2500	MV5352 LED yel D=5 mm	GI
	DL...42	50.04.2501	MV5452 LED grn D=5 mm	GI
	DL...43	50.04.2500	MV5352 LED yel D=5 mm	GI
	DL...44	50.04.2115	MV5752 LED red D=5 mm	GI
	DL...45	50.04.2500	MV5352 LED yel D=5 mm	GI
	DL...46	50.04.2500	MV5352 LED yel D=5 mm	GI
	DL...47	50.04.2115	MV5752 LED red D=5 mm	GI
	DL...48	50.04.2501	MV5452 LED grn D=5 mm	GI
	IC....1	50.17.1595	74HC595 8-Bit Shift Register	TI
	IC....2	50.17.1595	74HC595 8-Bit Shift Register	TI
	IC....6	50.17.1595	74HC595 8-Bit Shift Register	TI
	IC...12	50.06.0596	74LS596 8-Bit Shift Register O.C.	TI
	IC...13	50.17.1595	74HC595 8-Bit Shift Register	TI
	J.....1	54.01.0287	3-Pole CIS Socket Strip	AMP
	J.....2	54.01.0288	5-Pole CIS Socket Strip	AMP
	J.....3	54.01.0237	20-Pole CIS Socket Strip	AMP
	J.....4	54.01.0237	20-Pole CIS Socket Strip	AMP
	JP....6	54.01.0021	Bridge	
	JP...10	54.01.0021	Bridge	
	JP...11	54.01.0021	Bridge	
	JP...12	54.01.0021	Bridge	
	JP...13	54.01.0021	Bridge	
	JP...14	54.01.0021	Bridge	
	JP...15	54.01.0021	Bridge	
	JP...16	54.01.0021	Bridge	
	JP...17	54.01.0021	Bridge	
	JP...41	54.01.0021	Bridge	
	JP...42	54.01.0021	Bridge	
	JP...43	54.01.0021	Bridge	
	JP...46	00.00.0000	not used	
	JP...48	54.01.0021	Bridge	
	MP....1	54.01.0020	39 pcs Contact Pin	
	MP....2	1.011.235.03	3 pcs Push button case 3*	
	MP....4	1.011.235.05	2 pcs Push button case 5*	
	MP....5	1.011.235.23	3 pcs Conductive rubber 3*	
	MP....7	1.011.235.25	2 pcs Conductive rubber 5*	
	MP....8	1.011.235.29	25 pcs Bolt	
	MP....9	1.011.235.30	20 pcs Push button 14*5	
	MP...10	1.011.235.31	6 pcs Dummy calotte	
	MP...11	1.011.235.32	2 pcs Calotte red	
	MP...12	1.011.235.33	14 pcs Calotte yel	
	MP...13	1.011.235.34	3 pcs Calotte grn	
	MP...14	1.727.360.02	1 pce Push button case with Shuttle	
	MP...15	1.727.360.03	1 pce Conductive rubber with Shuttle	
	MP...16	1.727.360.04	5 pcs Push button 19*14	
	MP...17	1.727.360.05	1 pce Push button Adj.	
	MP...18	1.727.668.10	1 pce No. Label	
	MP...19	1.727.660.13	1 pce Command Panel PCB	
	MP...20	53.03.0221	19 pcs 2-pole LED Socket	
	MP...22	21.53.0354	2 pcs Hexagon socket head cap screw M3*6	
	MP...23	23.01.2032	2 pcs Washer	
	MP...24	24.16.1030	2 pcs Fin washer	
	MP...25	43.01.0108	1 pcs ESE Warning label	
	MP...26	1.727.360.07	1 pce Push button label , PLAY	
	MP...27	1.727.360.08	1 pce Push button label , STOP	
	MP...28	1.727.364.02	1 pce Push button label , blank (for S18)	
	MP...29	1.727.360.19	2 pcs Push button labels, FORWARD,REWIND	
	MP...30	1.011.235.35	1 pce Dummy push button 19*5	
	R.....1	57.11.3391	390 Ohm 1%, 0.25W, MF	
	R.....2	57.11.3391	390 Ohm 1%, 0.25W, MF	
	R.....3	57.11.3391	390 Ohm 1%, 0.25W, MF	
	R.....4	57.11.3391	390 Ohm 1%, 0.25W, MF	
	R.....5	57.11.3391	390 Ohm 1%, 0.25W, MF	
	R.....6	57.11.3391	390 Ohm 1%, 0.25W, MF	
	R.....7	57.11.3391	390 Ohm 1%, 0.25W, MF	
	R.....8	57.11.3391	390 Ohm 1%, 0.25W, MF	
	R.....9	57.11.3391	390 Ohm 1%, 0.25W, MF	
	R....10	57.11.3391	390 Ohm 1%, 0.25W, MF	
	R....11	57.11.3391	390 Ohm 1%, 0.25W, MF	
	R....12	57.11.3391	390 Ohm 1%, 0.25W, MF	
	R....15	57.11.3102	1 kOhm 1%, 0.25W, MF	
	R....55	57.11.3102	1 kOhm 1%, 0.25W, MF	
	R...101	57.11.3391	390 Ohm 1%, 0.25W, MF	
	R...102	57.11.3391	390 Ohm 1%, 0.25W, MF	
	R...103	57.11.3391	390 Ohm 1%, 0.25W, MF	
	R...104	57.11.3391	390 Ohm 1%, 0.25W, MF	
	R...105	57.11.3391	390 Ohm 1%, 0.25W, MF	
	R...106	57.11.3391	390 Ohm 1%, 0.25W, MF	
	R...107	57.11.3391	390 Ohm 1%, 0.25W, MF	
	R...108	57.11.3391	390 Ohm 1%, 0.25W, MF	
	R...109	57.11.3391	390 Ohm 1%, 0.25W, MF	
	R...110	57.11.3102	1 kOhm 1%, 0.25W, MF	
	R...111	57.11.3102	1 kOhm 1%, 0.25W, MF	
	S.....6	55.15.0130	Push button Switch	ITT
	W....46	64.01.0106	Wire Bridge	
	XIC...1	53.03.0168	16-Pole IC Socket	
	XIC...2	53.03.0168	16-Pole IC Socket	
	XIC...6	53.03.0168	16-Pole IC Socket	
	XIC..12	53.03.0168	16-Pole IC Socket	
	XIC..13	53.03.0168	16-Pole IC Socket	

CER=Ceramic, EL=Electrolytic, PETP=Polyester, SI=Silicon,
MF=Metal Film, PCerm=Pot. Cermet,
MANUFACTURER: AMP, GI=General Instrument, ITT, Mot=Motorola,
NS=National Semiconductor , Ph=Philips, Ra=Raytheon,
TI=Texas Instruments

1.727.668.83 COMMAND PAN.BOARD UNC MONO PB OGP 91/08/2600

END

COMMAND PANEL BOARD 2VU TC (2CH) 1.727.762.83

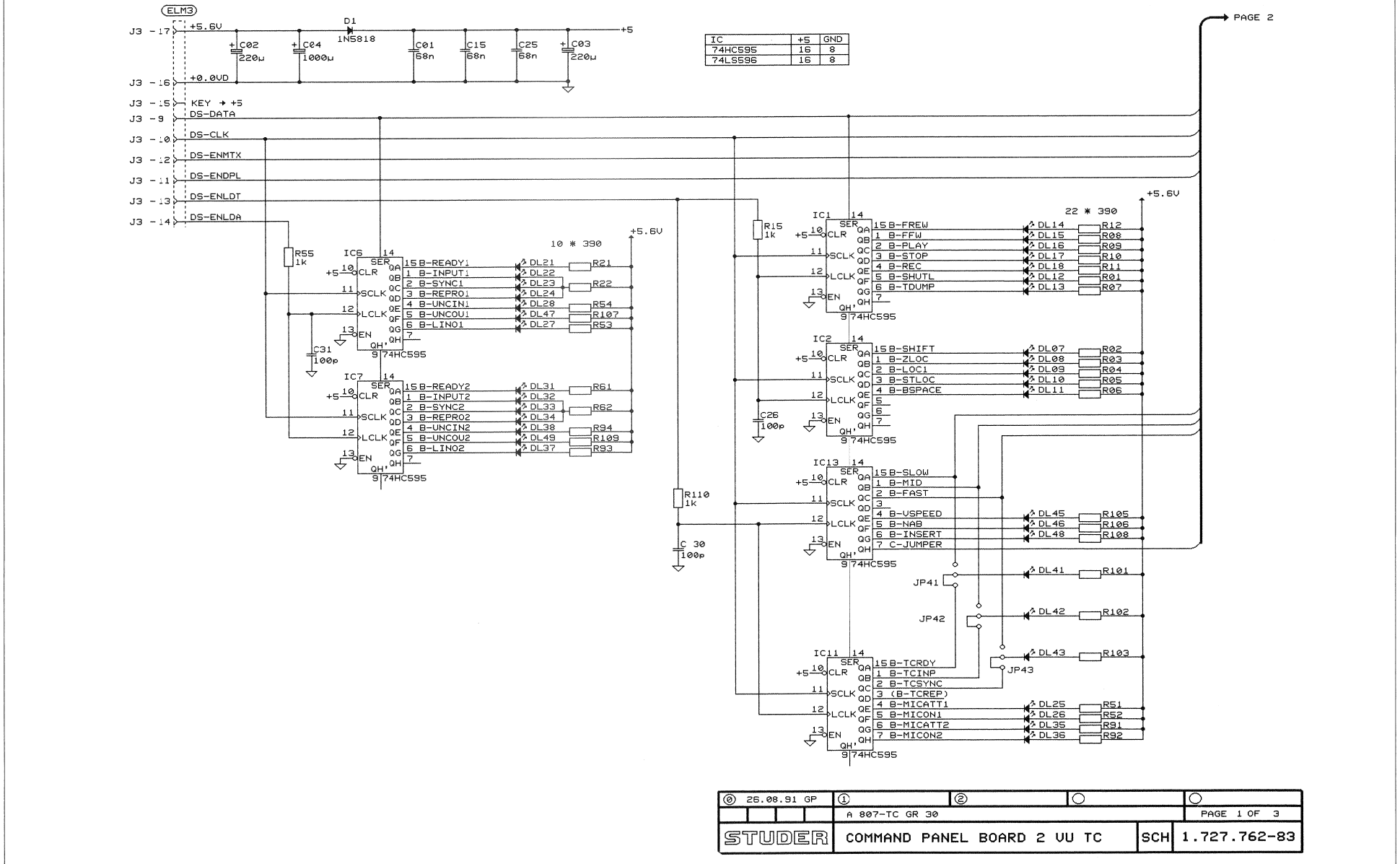

COMMAND PANEL BOARD 2VU TC (2CH) 1.727.762.83

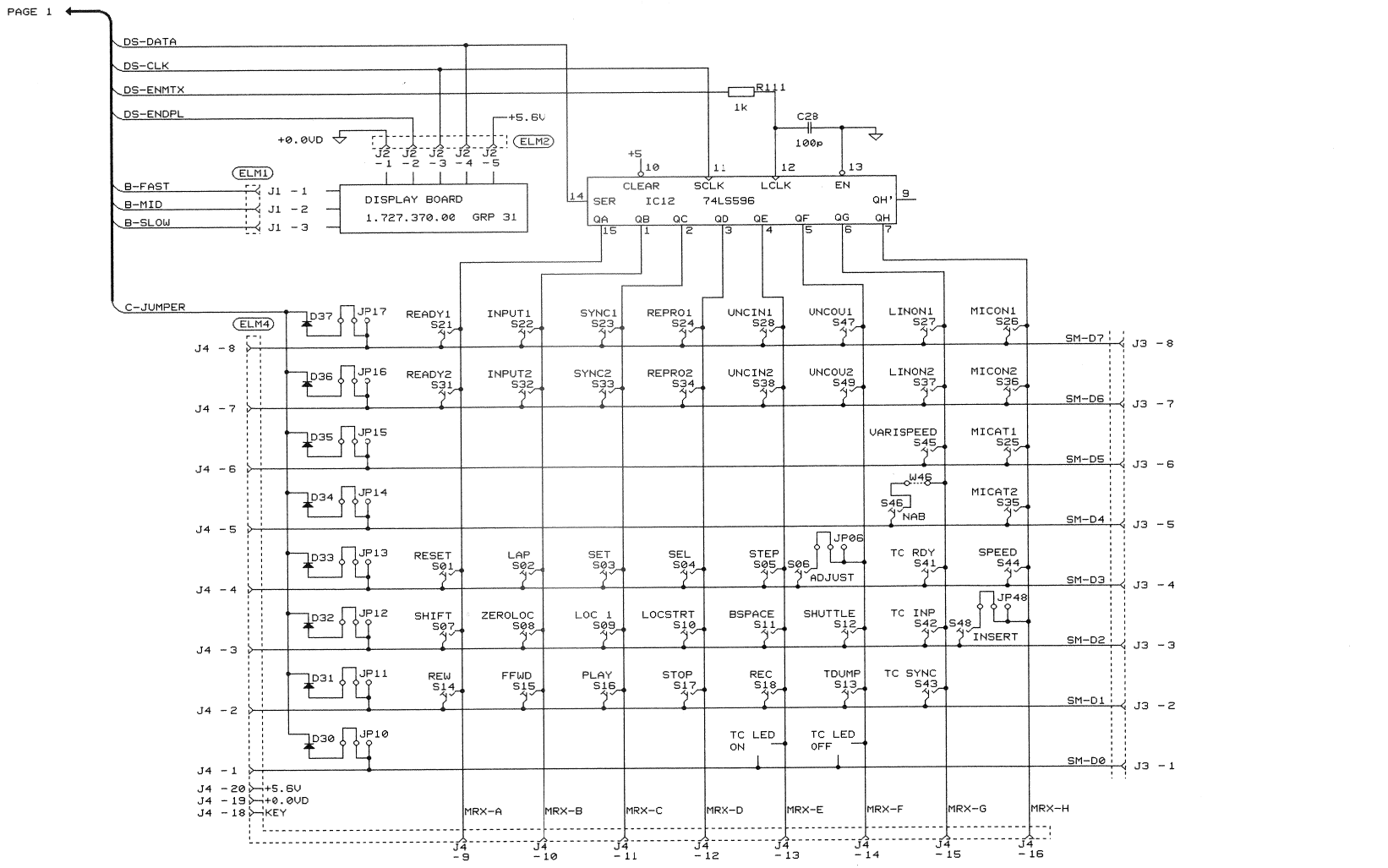

26.08.91 GP	1	2		
	A 807-TC GR 30			PAGE 2 OF 3
STUDER	COMMAND PANEL BOARD 2 VU TC		SCH	1.727.762-83

COMMAND PANEL BOARD 2VU TC (2CH) 1.727.762.83

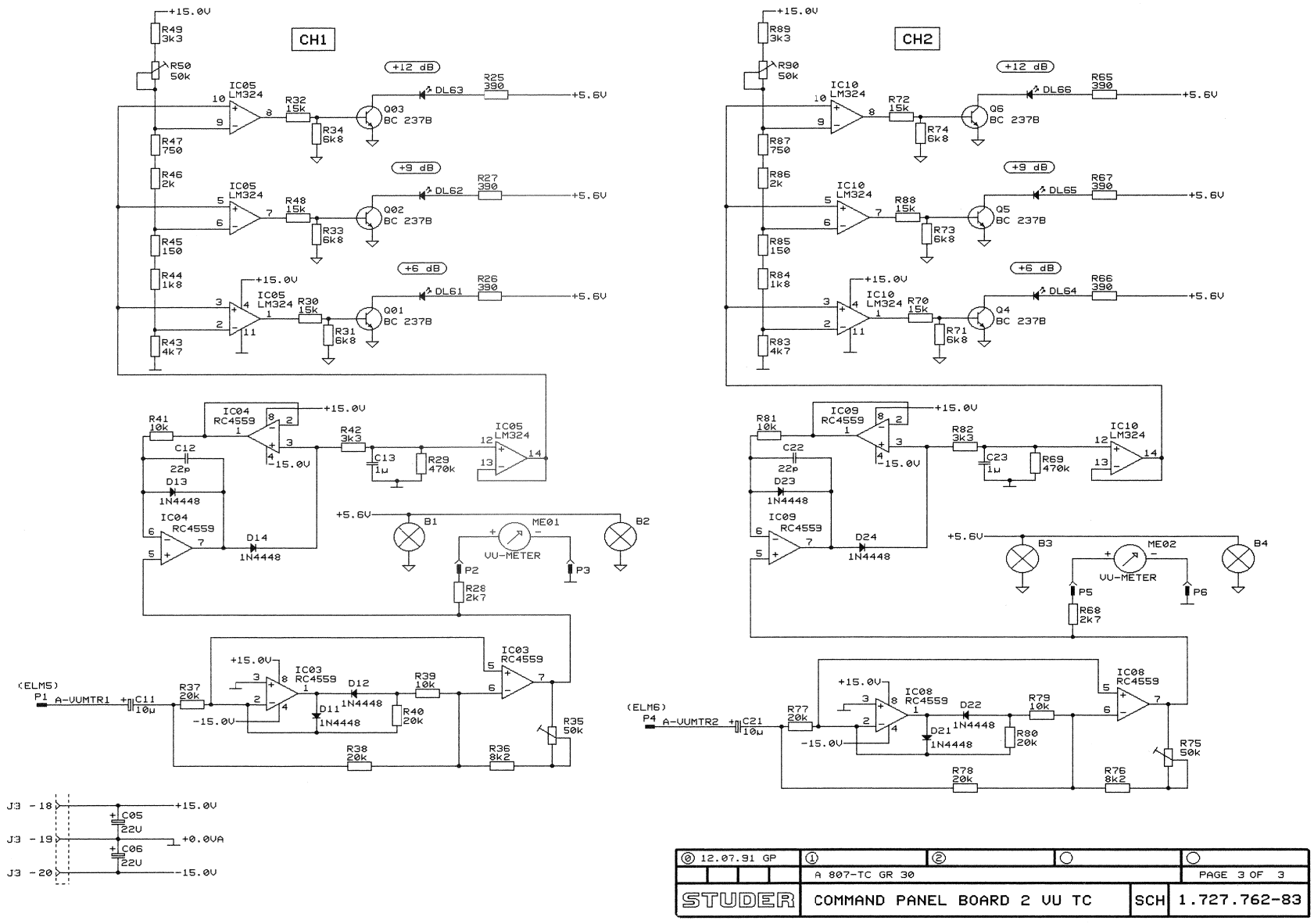

0 12.07.91 GP	1	2		
	A 807-TC GR 30			PAGE 3 OF 3
STUDER	COMMAND PANEL BOARD 2 VU TC		SCH	1.727.762-83

(for compcnents layout see under 1.727.662.83)

COMMAND PANEL BOARD 2VU TC (2CH) 1.727.762.83

IND.	POS.NO.	PART NO.	VALUE	SPECIFICATIONS / EQUIVALENT	MANUF.
	A....1	1.727.370.00		Display Board	
	A....2	1.727.180.00		Shuttle Control	
	B....1	51.02.0144	6 V	0.03 A Lamp	
	B....2	51.02.0144	6 V	0.03 A Lamp	
	B....3	51.02.0144	6 V	0.03 A Lamp	
	B....4	51.02.0144	6 V	0.03 A Lamp	
	C....1	59.06.0683	68 nF	10% 50 V PETP	
	C....2	59.22.3221	220 uF	-20% 10 V EL	
	C....3	59.22.3221	220 uF	-20% 10 V EL	
	C....4	59.22.3102	1000 uF	-20% 10 V EL	
	C....5	59.22.5220	22 uF	-20% 25 V EL	
	C....6	59.22.5220	22 uF	-20% 25 V EL	
	C....11	59.22.6100	10 uF	-20% 25 V EL	
	C....12	59.34.2220	22 pF	10% 50 V CER	
	C....13	59.06.0105	1 uF	10% 50 V PETP	
	C....15	59.06.0683	68 nF	10% 50 V PETP	
	C....21	59.22.6100	10 uF	-20% 25 V EL	
	C....22	59.34.2220	22 pF	10% 50 V CER	
	C....23	59.06.0105	1 uF	10% 50 V PETP	
	C....25	59.06.0683	68 nF	10% 50 V PETP	
	C....26	59.45.4101	100 pF	10% 50 V CER	
	C....27			not used	
	C....28	59.45.4101	100 pF	10% 50 V CER	
	C....29			not used	
	C....30	59.45.4101	100 pF	10% 50 V CER	
	C....31	59.45.4101	100 pF	10% 50 V CER	
	D....1	50.04.0512	:BS18	30 V Schottky	
	D....11	50.04.0125	:N4448	50 V SI	
	D....12	50.04.0125	:N4448	50 V SI	
	D....13	50.04.0125	:N4448	50 V SI	
	D....14	50.04.0125	:N4448	50 V SI	
	D....21	50.04.0125	:N4448	50 V SI	
	D....22	50.04.0125	:N4448	50 V SI	
	D....23	50.04.0125	:N4448	50 V SI	

IND.	POS.NO.	PART NO.	VALUE	SPECIFICATIONS / EQUIVALENT	MANUF.
	D....24	50.04.0125	:N4448	50 V SI	
	D....30	50.04.0125	:N4448	50 V SI	
	D....31	50.04.0125	:N4448	50 V SI	
	D....32	50.04.0125	:N4448	50 V SI	
	D....33	50.04.0125	:N4448	50 V SI	
	D....34	50.04.0125	:N4448	50 V SI	
	D....35	50.04.0125	:N4448	50 V SI	
	D....36	50.04.0125	:N4448	50 V SI	
	D....37	50.04.0125	:N4448	50 V SI	
	DL....7	50.04.2501	WY5452	LED grn D=5 mm	GI
	DL....8	50.04.2500	WY5352	LED yel D=5 mm	GI
	DL....9	50.04.2500	WY5352	LED yel D=5 mm	GI
	DL....10	50.04.2500	WY5352	LED yel D=5 mm	GI
	DL....11	50.04.2500	WY5352	LED yel D=5 mm	GI
	DL....12	50.04.2500	WY5352	LED yel D=5 mm	GI
	DL....13	50.04.2500	WY5352	LED yel D=5 mm	GI
	DL....14	50.04.2500	WY5352	LED yel D=5 mm	GI
	DL....15	50.04.2500	WY5352	LED yel D=5 mm	GI
	DL....17	50.04.2500	WY5352	LED yel D=5 mm	GI
	DL....18	50.04.2115	WY5752	LED red D=5 mm	GI
	DL....21	50.04.2115	WY5752	LED red D=5 mm	GI
	DL....22	50.04.2500	WY5352	LED yel D=5 mm	GI
	DL....23	50.04.2500	WY5352	LED yel D=5 mm	GI
	DL....24	50.04.2500	WY5352	LED yel D=5 mm	GI
	DL....25	50.04.2500	WY5352	LED yel D=5 mm	GI
	DL....26	50.04.2500	WY5352	LED yel D=5 mm	GI
	DL....27	50.04.2500	WY5352	LED yel D=5 mm	GI
	DL....28	50.04.2115	WY5752	LED red D=5 mm	GI
	DL....31	50.04.2115	WY5752	LED red D=5 mm	GI
	DL....32	50.04.2500	WY5352	LED yel D=5 mm	GI
	DL....33	50.04.2500	WY5352	LED yel D=5 mm	GI
	DL....34	50.04.2500	WY5352	LED yel D=5 mm	GI
	DL....35	50.04.2500	WY5352	LED yel D=5 mm	GI
	DL....36	50.04.2500	WY5352	LED yel D=5 mm	GI
	DL....37	50.04.2500	WY5352	LED yel D=5 mm	GI

IND.	POS.NO.	PART NO.	VALUE	SPECIFICATIONS / EQUIVALENT	MANUF.
	DL....38	50.04.2115	WY5752	LED red D=5 mm	GI
	DL....4	50.04.2115	WY5752	LED red D=5 mm	GI
	DL....42	50.04.2500	WY5352	LED yel D=5 mm	GI
	DL....43	50.04.2500	WY5352	LED yel D=5 mm	GI
	DL....45	50.04.2115	WY5752	LED red D=5 mm	GI
	DL....46	50.04.2500	WY5352	LED yel D=5 mm	GI
	DL....47	50.04.2115	WY5752	LED red D=5 mm	GI
	DL....48	50.04.2501	WY5452	LED grn D=5 mm	GI
	DL....49	50.04.2115	WY5752	LED red D=5 mm	GI
	DL....6	50.04.2119	WY57124	LED red 6.35x3.81	GI
	DL....62	50.04.2119	WY57124	LED red 6.35x3.81	GI
	DL....63	50.04.2119	WY57124	LED red 6.35x3.81	GI
	DL....64	50.04.2119	WY57124	LED red 6.35x3.81	GI
	DL....65	50.04.2119	WY57124	LED red 6.35x3.81	GI
	DL....66	50.04.2119	WY57124	LED red 6.35x3.81	GI
	IC....	50.17.1595	74HC595	8-Bit Shift Register	TI
	IC....2	50.17.1595	74HC595	8-Bit Shift Register	TI
	IC....3	50.09.0107	RC4559	Dual Op. Amp.	Ra
	IC....4	50.09.0107	RC4559	Dual Op. Amp.	Ra
	IC....5	50.05.0199	LM324	Quad Op. Amp.	NS,Mot
	IC....6	50.17.1595	74HC595	8-Bit Shift Register	TI
	IC....7	50.17.1595	74HC595	8-Bit Shift Register	TI
	IC....8	50.09.0107	RC4559	Dual Op. Amp.	Ra
	IC....9	50.09.0107	RC4559	Dual Op. Amp.	Ra
	IC....10	50.05.0199	LM324	Quad Op. Amp.	NS,Mot
	IC....11	50.17.1595	74HC595	8-Bit Shift Register	TI
	IC....12	50.06.0596	74LS596	8-Bit Shift Register O.C.	TI
	IC....13	50.17.1595	74HC595	8-Bit Shift Register	TI
	J.....	54.01.0287	3-Pole	CIS Socket Strip	AMP
	J....2	54.01.0288	5-Pole	CIS Socket Strip	AMP
	J....3	54.01.0237	20-Pole	CIS Socket Strip	AMP
	J....4	54.01.0237	20-Pole	CIS Socket Strip	AMP
	JP....	54.01.0021		Bridge	
	JP....10	54.01.0021		Bridge	

IND.	POS.NO.	PART NO.	VALUE	SPECIFICATIONS / EQUIVALENT	MANUF.
	JP....11	54.01.0021		Bridge	
	JP....12	54.01.0021		Bridge	
	JP....13	54.01.0021		Bridge	
	JP....14	54.01.0021		Bridge	
	JP....15	54.01.0021		Bridge	
	JP....16	54.01.0021		Bridge	
	JP....17	54.01.0021		Bridge	
	JP....41	54.01.0021		Bridge	
	JP....42	54.01.0021		Bridge	
	JP....43	54.01.0021		Bridge	
	JP....46			not used	
	JP....48	54.01.0021		Bridge	
	ME....1	1.727.360.01		VU Meter	
	ME....2	1.727.360.01		VU Meter	
	MP....1	54.01.0320	39 pcs	Contact Pin	
	MP....2	1.011.235.03	3 pcs	Push button case 3x	
	MP....3	1.011.235.04	4 pcs	Push button case 4x	
	MP....4	1.011.235.05	2 pcs	Push button case 5x	
	MP....5	1.011.235.23	3 pcs	Conductive rubber 3x	
	MP....6	1.011.235.24	4 pcs	Conductive rubber 4x	
	MP....7	1.011.235.25	2 pcs	Conductive rubber 5x	
	MP....8	1.011.235.29	42 pcs	Bolt	
	MP....9	1.011.235.30	37 pcs	Push button 14x5	
	MP....10	1.011.235.31	6 pcs	Dummy calotte	
	MP....11	1.011.235.32	9 pcs	Calotte red	
	MP....12	1.011.235.33	25 pcs	Calotte yel	
	MP....13	1.011.235.34	2 pcs	Calotte grn	
	MP....14	1.727.360.02	1 pcs	Push button case with Shuttle	
	MP....15	1.727.360.03	1 pcs	Conductive rubber with Shuttle	
	MP....16	1.727.360.04	5 pcs	Push button 19x14	
	MP....17	1.727.360.05	1 pcs	Push button Adj.	
	MP....18	1.727.762.10	1 pcs	No. Label	
	MP....19	1.727.660.13	1 pcs	Command Panel PCB	
	MP....20	54.01.0021	42 pcs	2-pole LED Socket	
	MP....21	1.727.362.93	2 pcs	L-ST Command Panel Board	

IND.	POS.NO.	PART NO.	VALUE	SPECIFICATIONS / EQUIVALENT	MANUF.
	D....21	50.04.0125	:N4448	50 V SI	
	D....30	50.04.0125	:N4448	50 V SI	
	D....31	50.04.0125	:N4448	50 V SI	
	D....32	50.04.0125	:N4448	50 V SI	
	D....33	50.04.0125	:N4448	50 V SI	
	D....34	50.04.0125	:N4448	50 V SI	
	D....35	50.04.0125	:N4448	50 V SI	
	D....36	50.04.0125	:N4448	50 V SI	
	D....37	50.04.0125	:N4448	50 V SI	
	DL....7	50.04.2501	WY5452	LED grn D=5 mm	GI
	DL....8	50.04.2500	WY5352	LED yel D=5 mm	GI
	DL....9	50.04.2500	WY5352	LED yel D=5 mm	GI
	DL....10	50.04.2500	WY5352	LED yel D=5 mm	GI
	DL....11	50.04.2500	WY5352	LED yel D=5 mm	GI
	DL....12	50.04.2500	WY5352	LED yel D=5 mm	GI
	DL....13	50.04.2500	WY5352	LED yel D=5 mm	GI
	DL....14	50.04.2500	WY5352	LED yel D=5 mm	GI
	DL....15	50.04.2500	WY5352	LED yel D=5 mm	GI
	DL....17	50.04.2500	WY5352	LED yel D=5 mm	GI
	DL....18	50.04.2115	WY5752	LED red D=5 mm	GI
	DL....21	50.04.2115	WY5752	LED red D=5 mm	GI
	DL....22	50.04.2500	WY5352	LED yel D=5 mm	GI
	DL....23	50.04.2500	WY5352	LED yel D=5 mm	GI
	DL....24	50.04.2500	WY5352	LED yel D=5 mm	GI
	DL....25	50.04.2500	WY5352	LED yel D=5 mm	GI
	DL....26	50.04.2500	WY5352	LED yel D=5 mm	GI
	DL....27	50.04.2500	WY5352	LED yel D=5 mm	GI
	DL....28	50.04.2115	WY5752	LED red D=5 mm	GI
	DL....31	50.04.2115	WY5752	LED red D=5 mm	GI
	DL....32	50.04.2500	WY5352	LED yel D=5 mm	GI
	DL....33	50.04.2500	WY5352	LED yel D=5 mm	GI
	DL....34	50.04.2500	WY5352	LED yel D=5 mm	GI
	DL....35	50.04.2500	WY5352	LED yel D=5 mm	GI
	DL....36	50.04.2500	WY5352	LED yel D=5 mm	GI
	DL....37	50.04.2500	WY5352	LED yel D=5 mm	GI

IND.	POS.NO.	PART NO.	VALUE	SPECIFICATIONS / EQUIVALENT	MANUF.
	R....22	57.11.3391	390 Ohm	1%, 0.25W, MF	
	R....25	57.11.3391	390 Ohm	1%, 0.25W, MF	
	R....26	57.11.3391	390 Ohm	1%, 0.25W, MF	
	R....27	57.11.3391	390 Ohm	1%, 0.25W, MF	
	R....28	57.11.3272	2.7 kOhm	1%, 0.25W, MF	
	R....29	57.11.3474	470 kOhm	1%, 0.25W, MF	
	R....30	57.11.3153	15 kOhm	1%, 0.25W, MF	
	R....31	57.11.3682	6.8 kOhm	1%, 0.25W, MF	
	R....32	57.11.3153	15 kOhm	1%, 0.25W, MF	
	R....33	57.11.3682	6.8 kOhm	1%, 0.25W, MF	
	R....34	57.11.3682	6.8 kOhm	1%, 0.25W, MF	
	R....35	58.01.8503	50 kOhm	10%, 0.5 W, PCerm	
	R....36	57.11.3822	8.2 kOhm	1%, 0.25W, MF	
	R....37	57.11.3203	20 kOhm	1%, 0.25W, MF	
	R....38	57.11.3203	20 kOhm	1%, 0.25W, MF	
	R....39	57.11.3103	10 kOhm	1%, 0.25W, MF	
	R....40	57.11.3203	20 kOhm	1%, 0.25W, MF	
	R....41	57.11.3103	10 kOhm	1%, 0.25W, MF	
	R....42	57.11.3332	3.3 kOhm	1%, 0.25W, MF	
	R....43	57.11.3472	4.7 kOhm	1%, 0.25W, MF	
	R....44	57.11.3182	1.8 kOhm	1%, 0.25W, MF	
	R....45	57.11.3151	150 Ohm	1%, 0.25W, MF	
	R....46	57.11.3202	2 kOhm	1%, 0.25W, MF	
	R....47	57.11.3751	750 Ohm	1%, 0.25W, MF	
	R....48	57.11.3153	15 kOhm	1%, 0.25W, MF	
	R....49	57.11.3332	3.3 kOhm	1%, 0.25W, MF	
	R....50	58.01.8503	50 kOhm	10%, 0.5 W, PCerm	
	R....51	57.11.3391	390 Ohm	1%, 0.25W, MF	
	R....52	57.11.3391	390 Ohm	1%, 0.25W, MF	
	R....53	57.11.3391	390 Ohm	1%, 0.25W, MF	
	R....54	57.11.3391	390 Ohm	1%, 0.25W, MF	
	R....55	57.11.3102	1 kOhm	1%, 0.25W, MF	
	R....61	57.11.3391	390 Ohm	1%, 0.25W, MF	
	R....62	57.11.3391	390 Ohm	1%, 0.25W, MF	
	R....65	57.11.3391	390 Ohm	1%, 0.25W, MF	
	R....66	57.11.3391	390 Ohm	1%, 0.25W, MF	
	R....67	57.11.3391	390 Ohm	1%, 0.25W, MF	

IND.	POS.NO.	PART NO.	VALUE	SPECIFICATIONS / EQUIVALENT	MANUF.
	R....68	57.11.3272	2.7 kOhm	1%, 0.25W, MF	
	R....69	57.11.3474	470 kOhm	1%, 0.25W, MF	
	R....70	57.11.3153	15 kOhm	1%, 0.25W, MF	
	R....71	57.11.3682	6.8 kOhm	1%, 0.25W, MF	
	R....72	57.11.3153	15 kOhm	1%, 0.25W, MF	
	R....73	57.11.3682	6.8 kOhm	1%, 0.25W, MF	
	R....74	57.11.3682	6.8 kOhm	1%, 0.25W, MF	
	R....75	58.01.8503	50 kOhm	10%, 0.5 W, PCerm	
	R....76	57.11.3822	8.2 kOhm	1%, 0.25W, MF	
	R....77	57.11.3203	20 kOhm	1%, 0.25W, MF	
	R....78	57.11.3203	20 kOhm	1%, 0.25W, MF	
	R....79	57.11.3103	10 kOhm	1%, 0.25W, MF	
	R....80	57.11.3203	20 kOhm	1%, 0.25W, MF	
	R....81	57.11.3103	10 kOhm	1%, 0.25W, MF	
	R....82	57.11.3332	3.3 kOhm	1%, 0.25W, MF	
	R....83	57.11.3472	4.7 kOhm	1%, 0.25W, MF	
	R....84	57.11.3182	1.8 kOhm	1%, 0.25W, MF	
	R....85	57.11.3151	150 Ohm	1%, 0.25W, MF	
	R....86	57.11.3202	2 kOhm	1%, 0.25W, MF	
	R....87	57.11.3751	750 Ohm	1%, 0.25W, MF	
	R....88	57.11.3153	15 kOhm	1%, 0.25W, MF	
	R....89	57.11.3332	3.3 kOhm	1%, 0.25W, MF	
	R....90	58.01.8503	50 kOhm	10%, 0.5 W, PCerm	
	R....91	57.11.3391	390 Ohm	1%, 0.25W, MF	
	R....92	57.11.3391	390 Ohm	1%, 0.25W, MF	
	R....93	57.11.3391	390 Ohm	1%, 0.25W, MF	
	R....94	57.11.3391	390 Ohm	1%, 0.25W, MF	
	R....101	57.11.3391	390 Ohm	1%, 0.25W, MF	
	R....102	57.11.3391	390 Ohm	1%, 0.25W, MF	
	R....103	57.11.3391	390 Ohm	1%, 0.25W, MF	
	R....105	57.11.3391	390 Ohm	1%, 0.25W, MF	
	R....106	57.11.3391	390 Ohm	1%, 0.25W, MF	
	R....107	57.11.3391	390 Ohm	1%, 0.25W, MF	
	R....108	57.11.3391	390 Ohm	1%, 0.25W, MF	
	R....109	57.11.3391	390 Ohm	1%, 0.25W, MF	
	R....110	57.11.3102	1 kOhm	1%, 0.25W, MF	
	R....111	57.11.3102	1 kOhm	1%, 0.25W, MF	

IND.	POS.NO.	PART NO.	VALUE	SPECIFICATIONS / EQUIVALENT	MANUF.
	MP....22	21.53.0354	2 pcs	Hexagon socket head cap screw M3x6	
	MP....23	23.01.2032	2 pcs	Washer	
	MP....24	24.16.1030	2 pcs	Tin washer	
	MP....25	43.01.0108	1 pcs	ESE Warning label	
	MP....26	1.727.360.07	1 pcs	Push button label / PLAY	
	MP....27	1.727.360.08	1 pcs	Push button label / STOP	
	MP....28	1.727.360.09	1 pcs	Push button label / RECORD	
	MP....29	1.727.360.19	2 pcs	Push button labels, FORWARD,REWIND	
	P.....1	54.02.0320		Plug 2.8x0.8	AMP
	P.....2	54.02.0320		Plug 2.8x0.8	AMP
	P.....3	54.02.0320		Plug 2.8x0.8	AMP
	P.....4	54.02.0320		Plug 2.8x0.8	AMP
	P.....5	54.02.0320		Plug 2.8x0.8	AMP
	P.....6	54.02.0320		Plug 2.8x0.8	AMP
	Q.....1	50.03.0436	BC237B	BC547B, BC550B NPN	
	Q.....2	50.03.0436	BC237B	BC547B, BC550B NPN	
	Q.....3	50.03.0436	BC237B	BC547B, BC550B NPN	
	Q.....4	50.03.0436	BC237B	BC547B, BC550B NPN	
	Q.....5	50.03.0436	BC237B	BC547B, BC550B NPN	
	Q.....6	50.03.0436	BC237B	BC547B, BC550B NPN	
	R.....1	57.11.3391	390 Ohm	1%, 0.25W, MF	
	R.....2	57.11.3391	390 Ohm	1%, 0.25W, MF	
	R.....3	57.11.3391	390 Ohm	1%, 0.25W, MF	
	R.....4	57.11.3391	390 Ohm	1%, 0.25W, MF	
	R.....5	57.11.3391	390 Ohm	1%, 0.25W, MF	
	R.....6	57.11.3391	390 Ohm	1%, 0.25W, MF	
	R.....7	57.11.3391	390 Ohm	1%, 0.25W, MF	
	R.....8	57.11.3391	390 Ohm	1%, 0.25W, MF	
	R.....9	57.11.3391	390 Ohm	1%, 0.25W, MF	
	R....10	57.11.3391	390 Ohm	1%, 0.25W, MF	
	R....11	57.11.3391	390 Ohm	1%, 0.25W, MF	
	R....12	57.11.3391	390 Ohm	1%, 0.25W, MF	
	R....15	57.11.3102	1 kOhm	1%, 0.25W, MF	
	R....21	57.11.3391	390 Ohm	1%, 0.25W, MF	

IND.	POS.NO.	PART NO.	VALUE	SPECIFICATIONS / EQUIVALENT	MANUF.
	S.....6	55.15.0130		Push button Switch	ITT
	W....46	64.01.0106		Wire Bridge	
	XB....1	53.04.0123		Lamp holder	
	XB....2	53.04.0123		Lamp holder	
	XB....3	53.04.0123		Lamp holder	
	XB....4	53.04.0123		Lamp holder	
	XIC...1	53.03.0168	16-Pole	IC Socket	
	XIC...2	53.03.0168	16-Pole	IC Socket	
	XIC...3	53.03.0166	8-Pole	IC Socket	
	XIC...4	53.03.0166	8-Pole	IC Socket	
	XIC...5	53.03.0167	14-Pole	IC Socket	
	XIC...6	53.03.0168	16-Pole	IC Socket	
	XIC...7	53.03.0168	16-Pole	IC Socket	
	XIC...8	53.03.0166	8-Pole	IC Socket	
	XIC...9	53.03.0166	8-Pole	IC Socket	
	XIC...10	53.03.0167	14-Pole	IC Socket	
	XIC...11	53.03.0168	16-Pole	IC Socket	
	XIC...12	53.03.0168	16-Pole	IC Socket	
	XIC...13	53.03.0168	16-Pole	IC Socket	

CER=Ceramic, EL=Electrolytic, PETP=Polyester, SI=Silicon,
MF=Metal Film, PCerm=Pot. Cermet,
MANUFACTURER: AMP, GI=General Instrument, ITT, Mot=Motorola,
NS=National Semiconductor , Ph=Philips, Ra=Raytheon,
TI=Texas Instruments

ORIG 91/08/26

(for circuit diagram see under 1.727.762.83, for components layout see under 1.727.662.83)

COMMAND PANEL BOARD 2/2 TC (2CH) 1.727.763.83

Ad	..POS..	...REF.No...	DESCRIPTION	MANUFACTURER
	A.....1	1.727.370.00	Display Board	
	A.....2	1.727.180.00	Shuttle Control	
	C.....1	59.06.0683	68 nF 10% 50 V PETP	
	C.....2	59.22.3221	220 uF -20% 10 V EL	
	C.....3	59.22.3221	220 uF -20% 10 V EL	
	C.....4	59.22.3102	1000 uF -20% 10 V EL	
	C....15	59.06.0683	68 nF 10% 50 V PETP	
	C....25	59.06.0683	68 nF 10% 50 V PETP	
	C....26	59.45.4101	100 pF 10% 50 V CER	
	C....27	00.00.0000	not used	
	C....28	59.45.4101	100 pF 10% 50 V CER	
	C....29	00.00.0000	not used	
	C....30	59.45.4101	100 pF 10% 50 V CER	
	C....31	59.45.4101	100 pF 10% 50 V CER	
	D.....1	50.04.0512	1N5818 30 V Schottky	
	D....30	50.04.0125	1N4448 50 V SI	
	D....31	50.04.0125	1N4448 50 V SI	
	D....32	50.04.0125	1N4448 50 V SI	
	D....33	50.04.0125	1N4448 50 V SI	
	D....34	50.04.0125	1N4448 50 V SI	
	D....35	50.04.0125	1N4448 50 V SI	
	D....36	50.04.0125	1N4448 50 V SI	
	D....37	50.04.0125	1N4448 50 V SI	
	DL....7	50.04.2501	MV5452 LED grn D=5 mm	GI
	DL....8	50.04.2500	MV5352 LED yel D=5 mm	GI
	DL....9	50.04.2500	MV5352 LED yel D=5 mm	GI
	DL...10	50.04.2500	MV5352 LED yel D=5 mm	GI
	DL...11	50.04.2500	MV5352 LED yel D=5 mm	GI
	DL...12	50.04.2500	MV5352 LED yel D=5 mm	GI
	DL...13	50.04.2500	MV5352 LED yel D=5 mm	GI
	DL...14	50.04.2500	MV5352 LED yel D=5 mm	GI
	DL...15	50.04.2500	MV5352 LED yel D=5 mm	GI
	DL...16	50.04.2500	MV5352 LED yel D=5 mm	GI
	DL...17	50.04.2500	MV5352 LED yel D=5 mm	GI
	DL...18	50.04.2115	MV5752 LED red D=5 mm	GI
	DL...21	50.04.2115	MV5752 LED red D=5 mm	GI
	DL...22	50.04.2500	MV5352 LED yel D=5 mm	GI
	DL...23	50.04.2500	MV5352 LED yel D=5 mm	GI
	DL...24	50.04.2500	MV5352 LED yel D=5 mm	GI
	DL...31	50.04.2115	MV5752 LED red D=5 mm	GI
	DL...32	50.04.2500	MV5352 LED yel D=5 mm	GI
	DL...33	50.04.2500	MV5352 LED yel D=5 mm	GI
	DL...34	50.04.2500	MV5352 LED yel D=5 mm	GI
	DL...41	50.04.2115	MV5752 LED red D=5 mm	GI
	DL...42	50.04.2500	MV5352 LED yel D=5 mm	GI
	DL...43	50.04.2500	MV5352 LED yel D=5 mm	GI
	DL...45	50.04.2115	MV5752 LED red D=5 mm	GI
	DL...46	50.04.2500	MV5352 LED yel D=5 mm	GI
	DL...48	50.04.2501	MV5452 LED grn D=5 mm	GI
	IC....1	50.17.1595	74HC595 8-Bit Shift Register	TI
	IC....2	50.17.1595	74HC595 8-Bit Shift Register	TI
	IC....6	50.17.1595	74HC595 8-Bit Shift Register	TI
	IC....7	50.17.1595	74HC595 8-Bit Shift Register	TI
	IC...11	50.17.1595	74HC595 8-Bit Shift Register	TI
	IC...12	50.06.0596	74LS596 8-Bit Shift Register O.C.	TI
	IC...13	50.17.1595	74HC595 8-Bit Shift Register	TI
	J.....1	54.01.0287	3-Pole CIS Socket Strip	AMP
	J.....2	54.01.0288	5-Pole CIS Socket Strip	AMP
	J.....3	54.01.0237	20-Pole CIS Socket Strip	AMP
	J.....4	54.01.0237	20-Pole CIS Socket Strip	AMP
	JP....6	54.01.0021	Bridge	
	JP...10	54.01.0021	Bridge	
	JP...11	54.01.0021	Bridge	
	JP...12	54.01.0021	Bridge	
	JP...13	54.01.0021	Bridge	
	JP...14	54.01.0021	Bridge	
	JP...15	54.01.0021	Bridge	
	JP...16	54.01.0021	Bridge	
	JP...17	54.01.0021	Bridge	
	JP...41	54.01.0021	Bridge	
	JP...42	54.01.0021	Bridge	
	JP...43	54.01.0021	Bridge	
	JP...46	00.00.0000	not used	
	JP...48	54.01.0021	Bridge	
	MP....1	54.01.0020	39 pcs Contact Pin	
	MP....2	1.011.235.03	3 pcs Push button case 3*	
	MP....3	1.011.235.04	2 pcs Push button case 4*	
	MP....4	1.011.235.05	2 pcs Push button case 5*	
	MP....5	1.011.235.23	3 pcs Conductive rubber 3*	
	MP....6	1.011.235.24	2 pcs Conductive rubber 4*	
	MP....7	1.011.235.25	2 pcs Conductive rubber 5*	
	MP....8	1.011.235.29	32 pcs Bolt	
	MP....9	1.011.235.30	27 pcs Push button 14*5	
	MP...10	1.011.235.31	6 pcs Dummy calotte	
	MP...11	1.011.235.32	5 pcs Calotte red	
	MP...12	1.011.235.33	19 pcs Calotte yel	
	MP...13	1.011.235.34	2 pcs Calotte grn	
	MP...14	1.727.360.02	1 pce Push button case with Shuttle	
	MP...15	1.727.360.03	1 pce Conductive rubber with Shuttle	
	MP...16	1.727.360.04	5 pcs Push button 19*14	
	MP...17	1.727.360.05	1 pce Push button Adj.	
	MP...18	1.727.763.10	1 pce No. Label	
	MP...19	1.727.660.13	1 pce Command Panel PCB	
	MP...20	53.03.0221	26 pcs 2-pole LED Socket	
	MP...22	21.53.0354	2 pcs Hexagon socket head cap screw M3*6	
	MP...23	23.01.2032	2 pcs Washer	
	MP...24	24.16.1030	2 pcs Fin washer	
	MP...25	43.01.0108	1 pce ESE Warning label	
	MP...26	1.727.360.07	1 pce Push button label , PLAY	
	MP...27	1.727.360.08	1 pce Push button label , STOP	
	MP...28	1.727.360.09	1 pce Push button label , RECORD	
	MP...29	1.727.360.19	2 pcs Push button labels, FORWARD,REWIND	
	MP...30	1.011.235.35	2 pcs Dummy push button 19*5	
	R.....1	57.11.3391	390 Ohm 1%, 0.25W, MF	
	R.....2	57.11.3391	390 Ohm 1%, 0.25W, MF	
	R.....3	57.11.3391	390 Ohm 1%, 0.25W, MF	
	R.....4	57.11.3391	390 Ohm 1%, 0.25W, MF	
	R.....5	57.11.3391	390 Ohm 1%, 0.25W, MF	
	R.....6	57.11.3391	390 Ohm 1%, 0.25W, MF	
	R.....7	57.11.3391	390 Ohm 1%, 0.25W, MF	
	R.....8	57.11.3391	390 Ohm 1%, 0.25W, MF	
	R.....9	57.11.3391	390 Ohm 1%, 0.25W, MF	
	R....10	57.11.3391	390 Ohm 1%, 0.25W, MF	
	R....11	57.11.3391	390 Ohm 1%, 0.25W, MF	
	R....12	57.11.3391	390 Ohm 1%, 0.25W, MF	
	R....15	57.11.3102	1 kOhm 1%, 0.25W, MF	
	R....21	57.11.3391	390 Ohm 1%, 0.25W, MF	
	R....22	57.11.3391	390 Ohm 1%, 0.25W, MF	
	R....55	57.11.3102	1 kOhm 1%, 0.25W, MF	
	R....61	57.11.3391	390 Ohm 1%, 0.25W, MF	
	R....62	57.11.3391	390 Ohm 1%, 0.25W, MF	
	R...101	57.11.3391	390 Ohm 1%, 0.25W, MF	
	R...102	57.11.3391	390 Ohm 1%, 0.25W, MF	
	R...103	57.11.3391	390 Ohm 1%, 0.25W, MF	
	R...105	57.11.3391	390 Ohm 1%, 0.25W, MF	
	R...106	57.11.3391	390 Ohm 1%, 0.25W, MF	
	R...108	57.11.3391	390 Ohm 1%, 0.25W, MF	
	R...110	57.11.3102	1 kOhm 1%, 0.25W, MF	
	R...111	57.11.3102	1 kOhm 1%, 0.25W, MF	
	S.....6	55.15.0130	Push button Switch	ITT
	W....46	64.01.0106	Wire Bridge	
	XIC...1	53.03.0168	16-Pole IC Socket	
	XIC...2	53.03.0168	16-Pole IC Socket	
	XIC...6	53.03.0168	16-Pole IC Socket	
	XIC...7	53.03.0168	16-Pole IC Socket	
	XIC..11	53.03.0168	16-Pole IC Socket	
	XIC..12	53.03.0168	16-Pole IC Socket	
	XIC..13	53.03.0168	16-Pole IC Socket	

CER=Ceramic, EL=Electrolytic, PETP=Polyester, SI=Silicon,
MF=Metal Film, PCerm=Pot. Cermet,
MANUFACTURER: AMP, GI=General Instrument, ITT, Mot=Motorola,
NS=National Semiconductor , Ph=Philips, Ra=Raytheon,
TI=Texas Instruments

1.727.763.83 COMMAND PANEL BOARD 2/2 TC GP 91/08/2600

END

(for circuit diagram see under 1.727.762.83, for components layout see under 1.727.662.83)

COMMAND PANEL BOARD 0VU TC (2CH) 1.727.760.83

Ad	..POS..	...REF.No...	DESCRIPTION	MANUFACTURER
	A.....1	1.727.370.00	Display Board	
	A.....2	1.727.180.00	Shuttle Control	
	C.....1	59.06.0683	68 nF 10% 50 V PETP	
	C.....2	59.22.3221	220 uF -20% 10 V EL	
	C.....3	59.22.3221	220 uF -20% 10 V EL	
	C.....4	59.22.3102	1000 uF -20% 10 V EL	
	C....25	59.06.0683	68 nF 10% 50 V PETP	
	C....26	59.45.4101	100 pF 10% 50 V CER	
	C....27	00.00.0000	not used	
	C....28	59.45.4101	100 pF 10% 50 V CER	
	C....29	00.00.0000	not used	
	C....30	59.45.4101	100 pF 10% 50 V CER	
	D.....1	50.04.0512	1N5818 30 V Schottky	
	D....30	50.04.0125	1N4448 50 V SI	
	D....31	50.04.0125	1N4448 50 V SI	
	D....32	50.04.0125	1N4448 50 V SI	
	D....33	50.04.0125	1N4448 50 V SI	
	D....34	50.04.0125	1N4448 50 V SI	
	D....35	50.04.0125	1N4448 50 V SI	
	D....36	50.04.0125	1N4448 50 V SI	
	D....37	50.04.0125	1N4448 50 V SI	
	DL....7	50.04.2501	MV5452 LED grn D=5 mm	GI
	DL....8	50.04.2500	MV5352 LED yel D=5 mm	GI
	DL....9	50.04.2500	MV5352 LED yel D=5 mm	GI
	DL...10	50.04.2500	MV5352 LED yel D=5 mm	GI
	DL...11	50.04.2500	MV5352 LED yel D=5 mm	GI
	DL...12	50.04.2500	MV5352 LED yel D=5 mm	GI
	DL...13	50.04.2500	MV5352 LED yel D=5 mm	GI
	DL...14	50.04.2500	MV5352 LED yel D=5 mm	GI
	DL...15	50.04.2500	MV5352 LED yel D=5 mm	GI
	DL...16	50.04.2500	MV5352 LED yel D=5 mm	GI
	DL...17	50.04.2500	MV5352 LED yel D=5 mm	GI
	DL...18	50.04.2115	MV5752 LED red D=5 mm	GI
	DL...41	50.04.2115	MV5752 LED red D=5 mm	GI
	DL...42	50.04.2500	MV5352 LED yel D=5 mm	GI
	DL...43	50.04.2500	MV5352 LED yel D=5 mm	GI
	DL...45	50.04.2115	MV5752 LED red D=5 mm	GI
	DL...46	50.04.2500	MV5352 LED yel D=5 mm	GI
	DL...48	50.04.2501	MV5452 LED grn D=5 mm	GI
	IC.....1	50.17.1595	74HC595 8-Bit Shift Register	TI
	IC.....2	50.17.1595	74HC595 8-Bit Shift Register	TI
	IC...11	50.17.1595	74HC595 8-Bit Shift Register	TI
	IC...12	50.06.0596	74LS596 8-Bit Shift Register O.C.	TI
	IC...13	50.17.1595	74HC595 8-Bit Shift Register	TI
	J.....1	54.01.0287	3-Pole CIS Socket Strip	AMP
	J.....2	54.01.0288	5-Pole CIS Socket Strip	AMP
	J.....3	54.01.0237	20-Pole CIS Socket Strip	AMP
	J.....4	54.01.0237	20-Pole CIS Socket Strip	AMP
	JP....6	54.01.0021	Bridge	
	JP...10	54.01.0021	Bridge	
	JP...11	54.01.0021	Bridge	
	JP...12	54.01.0021	Bridge	
	JP...13	54.01.0021	Bridge	
	JP...14	54.01.0021	Bridge	
	JP...15	54.01.0021	Bridge	
	JP...16	54.01.0021	Bridge	
	JP...17	54.01.0021	Bridge	
	JP...41	54.01.0021	Bridge	
	JP...42	54.01.0021	Bridge	
	JP...43	54.01.0021	Bridge	
	JP...46	00.00.0000	not used	
	JP...48	54.01.0021	Bridge	
	MP....1	54.01.0020	39 pcs Contact Pin	
	MP....2	1.011.235.03	3 pcs Push button case 3*	
	MP....4	1.011.235.05	2 pcs Push button case 5*	
	MP....5	1.011.235.23	3 pcs Conductive rubber 3*	
	MP....7	1.011.235.25	2 pcs Conductive rubber 5*	
	MP....8	1.011.235.29	24 pcs Bolt	
	MP....9	1.011.235.30	19 pcs Push button 14*5	
	MP...10	1.011.235.31	6 pcs Dummy calotte	
	MP...11	1.011.235.32	3 pcs Calotte red	
	MP...12	1.011.235.33	13 pcs Calotte yel	
	MP...13	1.011.235.34	2 pcs Calotte grn	
	MP...14	1.727.360.02	1 pcs Push button case with Shuttle	
	MP...15	1.727.360.03	1 pcs Conductive rubber with Shuttle	
	MP...16	1.727.360.04	5 pcs Push button 19*14	
	MP...17	1.727.360.05	1 pcs Push button Adj.	
	MP...18	1.727.760.10	1 pcs No. Label	
	MP...19	1.727.660.13	1 pcs Command Panel PCB	
	MP...20	53.03.0221	18 pcs 2-pole LED Socket	
	MP...22	21.53.0354	2 pcs Hexagon socket head cap screw M3*6	
	MP...23	23.01.2032	2 pcs Washer	
	MP...24	24.16.1030	2 pcs Fin washer	
	MP...25	43.01.0108	1 pcs ESE Warning label	
	MP...26	1.727.360.07	1 pce Push button label , PLAY	
	MP...27	1.727.360.08	1 pce Push button label , STOP	
	MP...28	1.727.360.09	1 pce Push button label , RECORD	
	MP...29	1.727.360.19	2 pcs Push button labels, FORWARD,REWIND	
	MP...30	1.011.235.35	2 pcs Dummy push button 19*5	
	R.....1	57.11.3391	390 Ohm 1%, 0.25W, MF	
	R.....2	57.11.3391	390 Ohm 1%, 0.25W, MF	
	R.....3	57.11.3391	390 Ohm 1%, 0.25W, MF	
	R.....4	57.11.3391	390 Ohm 1%, 0.25W, MF	
	R.....5	57.11.3391	390 Ohm 1%, 0.25W, MF	
	R.....6	57.11.3391	390 Ohm 1%, 0.25W, MF	
	R.....7	57.11.3391	390 Ohm 1%, 0.25W, MF	
	R.....8	57.11.3391	390 Ohm 1%, 0.25W, MF	
	R.....9	57.11.3391	390 Ohm 1%, 0.25W, MF	
	R....10	57.11.3391	390 Ohm 1%, 0.25W, MF	
	R....11	57.11.3391	390 Ohm 1%, 0.25W, MF	
	R....12	57.11.3391	390 Ohm 1%, 0.25W, MF	
	R....15	57.11.3102	1 kOhm 1%, 0.25W, MF	
	R...101	57.11.3391	390 Ohm 1%, 0.25W, MF	
	R...102	57.11.3391	390 Ohm 1%, 0.25W, MF	
	R...103	57.11.3391	390 Ohm 1%, 0.25W, MF	
	R...105	57.11.3391	390 Ohm 1%, 0.25W, MF	
	R...106	57.11.3391	390 Ohm 1%, 0.25W, MF	
	R...108	57.11.3391	390 Ohm 1%, 0.25W, MF	
	R...110	57.11.3102	1 kOhm 1%, 0.25W, MF	
	R...111	57.11.3102	1 kOhm 1%, 0.25W, MF	
	S.....6	55.15.0130	Push button Switch	ITT
	W....46	64.01.0106	Wire Bridge	
	XIC...1	53.03.0168	16-Pole IC Socket	
	XIC...2	53.03.0168	16-Pole IC Socket	
	XIC..11	53.03.0168	16-Pole IC Socket	
	XIC..12	53.03.0168	16-Pole IC Socket	
	XIC..13	53.03.0168	16-Pole IC Socket	

CER=Ceramic, EL=Electrolytic, PETP=Polyester, SI=Silicon,
MF=Metal Film, PCerm=Pot. Cermet,
MANUFACTURER: AMP, GI=General Instrument, ITT, Mot=Motorola,
NS=National Semiconductor , Ph=Philips, Ra=Raytheon,
TI=Texas Instruments

1.727.760.83 COMMAND PANEL BOARD OVU TC GP 91/08/2600

END

COMMAND PANEL BOARD TC (4CH) 1.727.766.83

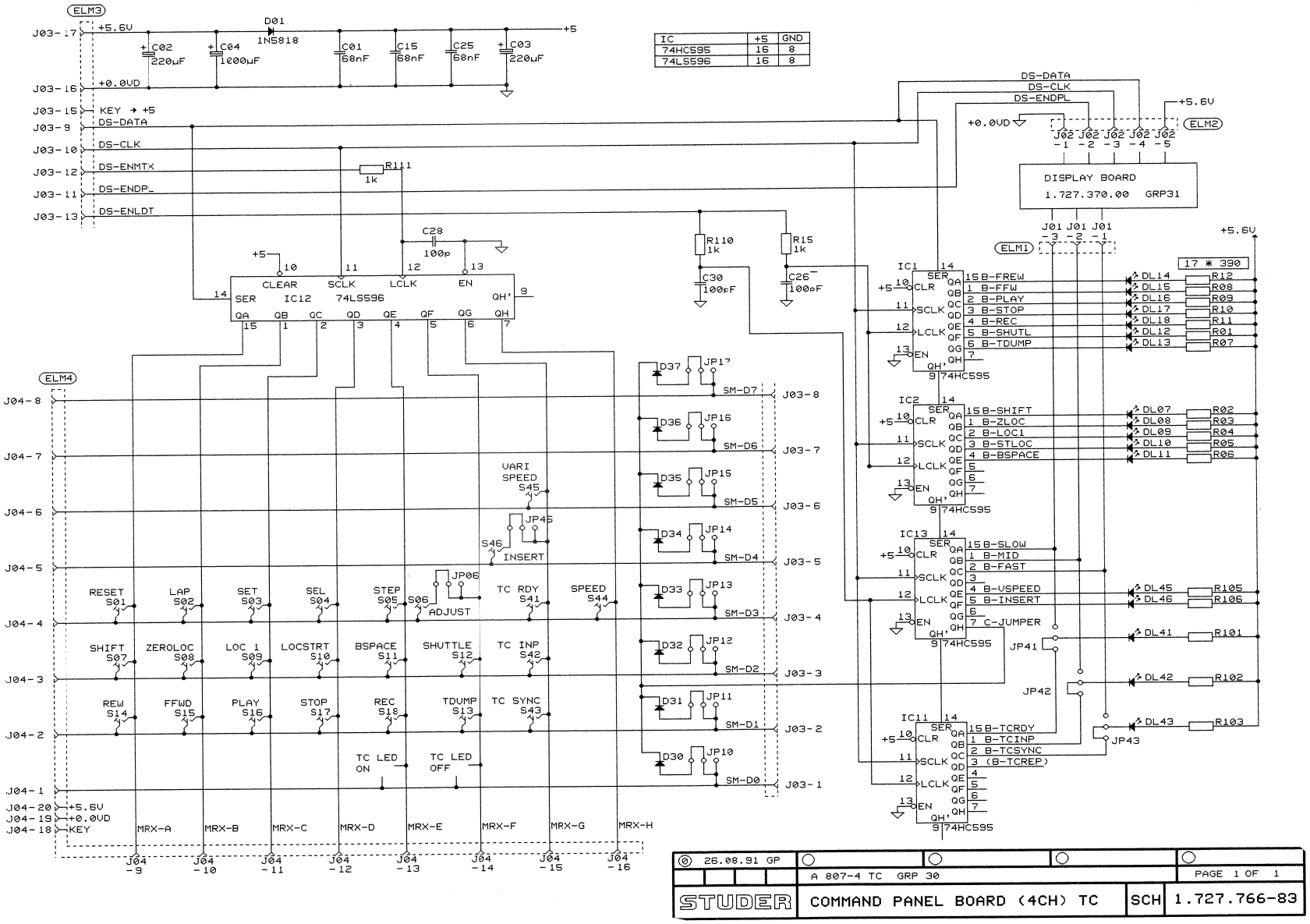

(for components layout see under 1.727.662.83)

COMMAND PANEL BOARD TC (4CH) 1.727.766.83

IND.	POS.NO.	PART NO.	VALUE	SPECIFICATIONS / EQUIVALENT	MANUF.
	A....1	1.727.370.00		Display Board	
	A....2	1.727.180.00		Shuttle Control	
	C....1	59.06.0683	68 nF	10% 50 V PETP	
	C....2	59.22.3221	220 uF	-20% 10 V EL	
	C....3	59.22.3221	220 uF	-20% 10 V EL	
	C....4	59.22.3102	1000 uF	-20% 10 V EL	
	C....25	59.06.0683	68 nF	10% 50 V PETP	
	C....26	59.45.4101	100 pF	10% 50 V CER	
	C....27			not used	
	C....28	59.45.4101	100 pF	10% 50 V CER	
	C....29			not used	
	C....30	59.45.4101	100 pF	10% 50 V CER	
	D....1	50.04.0512	1N5818	30 V Schottky	
	D....30	50.04.0125	1N4448	50 V SI	
	D....31	50.04.0125	1N4448	50 V SI	
	D....32	50.04.0125	1N4448	50 V SI	
	D....33	50.04.0125	1N4448	50 V SI	
	D....34	50.04.0125	1N4448	50 V SI	
	D....35	50.04.0125	1N4448	50 V SI	
	D....36	50.04.0125	1N4448	50 V SI	
	D....37	50.04.0125	1N4448	50 V SI	
	DL....7	50.04.2501	MV5452	LED grn D=5 mm	GI
	DL....8	50.04.2500	MV5352	LED yel D=5 mm	GI
	DL....9	50.04.2500	MV5352	LED yel D=5 mm	GI
	DL...10	50.04.2500	MV5352	LED yel D=5 mm	GI
	DL...11	50.04.2500	MV5352	LED yel D=5 mm	GI
	DL...12	50.04.2500	MV5352	LED yel D=5 mm	GI
	DL...13	50.04.2500	MV5352	LED yel D=5 mm	GI
	DL...14	50.04.2500	MV5352	LED yel D=5 mm	GI
	DL...15	50.04.2500	MV5352	LED yel D=5 mm	GI
	DL...16	50.04.2500	MV5352	LED yel D=5 mm	GI
	DL...17	50.04.2500	MV5352	LED yel D=5 mm	GI
	DL...18	50.04.2115	MV5752	LED red D=5 mm	GI
	DL...41	50.04.2115	MV5752	LED red D=5 mm	GI

IND.	POS.NO.	PART NO.	VALUE	SPECIFICATIONS / EQUIVALENT	MANUF.
	DL...42	50.04.2500	MV5352	LED yel D=5 mm	GI
	DL...43	50.04.2500	MV5352	LED yel D=5 mm	GI
	DL...45	50.04.2115	MV5752	LED red D=5 mm	GI
	DL...46	50.04.2501	MV5452	LED grn D=5 mm	GI
	IC....1	50.17.1595	74HC595	8-Bit Shift Register	TI
	IC....2	50.17.1595	74HC595	8-Bit Shift Register	TI
	IC....11	50.17.1595	74HC595	8-Bit Shift Register	TI
	IC....12	50.06.0596	74LS596	8-Bit Shift Register O.C.	TI
	IC....13	50.17.1595	74HC595	8-Bit Shift Register	TI
	J....1	54.01.0267	3-Pole	CIS Socket Strip	AMP
	J....2	54.01.0289	5-Pole	CIS Socket Strip	AMP
	J....3	54.01.0237	20-Pole	CIS Socket Strip	AMP
	J....4	54.01.0237	20-Pole	CIS Socket Strip	AMP
	JP....6	54.01.0021		Bridge	
	JP...10	54.01.0021		Bridge	
	JP...11	54.01.0021		Bridge	
	JP...12	54.01.0021		Bridge	
	JP...13	54.01.0021		Bridge	
	JP...14	54.01.0021		Bridge	
	JP...15	54.01.0021		Bridge	
	JP...16	54.01.0021		Bridge	
	JP...17	54.01.0021		Bridge	
	JP...41	54.01.0021		Bridge	
	JP...42	54.01.0021		Bridge	
	JP...43	54.01.0021		Bridge	
	JP...46	54.01.0021		Bridge	
	JP...46			not used	
	MP....1	54.01.0020	42 pcs	Contact Pin	
	MP....2	1.011.235.03	2 pcs	Push button case 3*	
	MP....4	1.011.235.05	2 pcs	Push button case 5*	
	MP....5	1.011.235.23	2 pcs	Conductive rubber 3*	
	MP....7	1.011.235.25	2 pcs	Conductive rubber 5*	
	MP....8	1.011.235.29	23 pcs	Bolt	

IND.	POS.NO.	PART NO.	VALUE	SPECIFICATIONS / EQUIVALENT	MANUF.
	MP....9	1.011.235.30	18 pcs	Push button 14*5	
	MP...10	1.011.235.31	6 pcs	Dummy calotte	
	MP...11	1.011.235.32	3 pcs	Calotte red	
	MP...12	1.011.235.33	12 pcs	Calotte yel	
	MP...13	1.011.235.34	2 pcs	Calotte grn	
	MP...14	1.727.360.02	1 pcs	Push button case with Shuttle	
	MP...15	1.727.360.03	1 pcs	Conductive rubber with Shuttle	
	MP...16	1.727.360.04	5 pcs	Push button 19*14	
	MP...17	1.727.360.05	1 pcs	Push button Adj.	
	MP...18	1.727.766.10	1 pcs	Fo. Label	
	MP...19	1.727.660.13	1 pcs	Command Panel PCB	
	MP...20	59.03.0221	17 pcs	2-pole LED Socket	
	MP...22	21.53.0354	2 pcs	Hexagon socket head cap screw M3*6	
	MP...23	23.01.2032	2 pcs	Washer	
	MP...24	24.16.1030	2 pcs	Fix washer	
	MP...25	43.01.0108	1 pcs	ESE Warning label	
	MP...26	1.727.360.07	1 pcs	Push button label , PLAY	
	MP...27	1.727.360.08	1 pcs	Push button label , STOP	
	MP...28	1.727.360.09	1 pcs	Push button label , RECORD	
	MP...29	1.727.360.19	2 pcs	Push button labels, FORWARD,REWIND	
	R....1	57.11.3391	390 Ohm	1%, 0.25W, MF	
	R....2	57.11.3391	390 Ohm	1%, 0.25W, MF	
	R....3	57.11.3391	390 Ohm	1%, 0.25W, MF	
	R....4	57.11.3391	390 Ohm	1%, 0.25W, MF	
	R....5	57.11.3391	390 Ohm	1%, 0.25W, MF	
	R....6	57.11.3391	390 Ohm	1%, 0.25W, MF	
	R....7	57.11.3391	390 Ohm	1%, 0.25W, MF	
	R....8	57.11.3391	390 Ohm	1%, 0.25W, MF	
	R....9	57.11.3391	390 Ohm	1%, 0.25W, MF	
	R...10	57.11.3391	390 Ohm	1%, 0.25W, MF	
	R...11	57.11.3391	390 Ohm	1%, 0.25W, MF	
	R...12	57.11.3391	390 Ohm	1%, 0.25W, MF	
	R...15	57.11.3102	1 kOhm	1%, 0.25W, MF	
	R...101	57.11.3391	390 Ohm	1%, 0.25W, MF	
	R...102	57.11.3391	390 Ohm	1%, 0.25W, MF	
	R...103	57.11.3391	390 Ohm	1%, 0.25W, MF	

IND.	POS.NO.	PART NO.	VALUE	SPECIFICATIONS / EQUIVALENT	MANUF.
	R...105	57.11.3391	390 Ohm	1%, 0.25W, MF	
	R...106	57.11.3391	390 Ohm	1%, 0.25W, MF	
	R...110	57.11.3102	1 kOhm	1%, 0.25W, MF	
	R...111	57.11.3102	1 kOhm	1%, 0.25W, MF	
	S.....6	55.15.0130		Push button Switch	ITT
	W....46			not used	
	XIC...1	53.03.0168	16-Pole	IC Socket	
	XIC...2	53.03.0168	16-Pole	IC Socket	
	XIC...11	53.03.0168	16-Pole	IC Socket	
	XIC...12	53.03.0168	16-Pole	IC Socket	
	XIC...13	53.03.0168	16-Pole	IC Socket	

CER=Ceramic, EL=Electrolytic, PETP=Polyester, SI=Silicon,
MF=Metal Film, PCer=Pot. Ceram.
MANUFACTURER: AMP, GI=General Instrument, ITT, Mot=Motorola,
NS=National Semiconductor , Ph=Philips, Ra=Raytheon,
TI=Texas Instruments

ORIG 91/08/26

DISPLAY BOARD 1.727.370.00

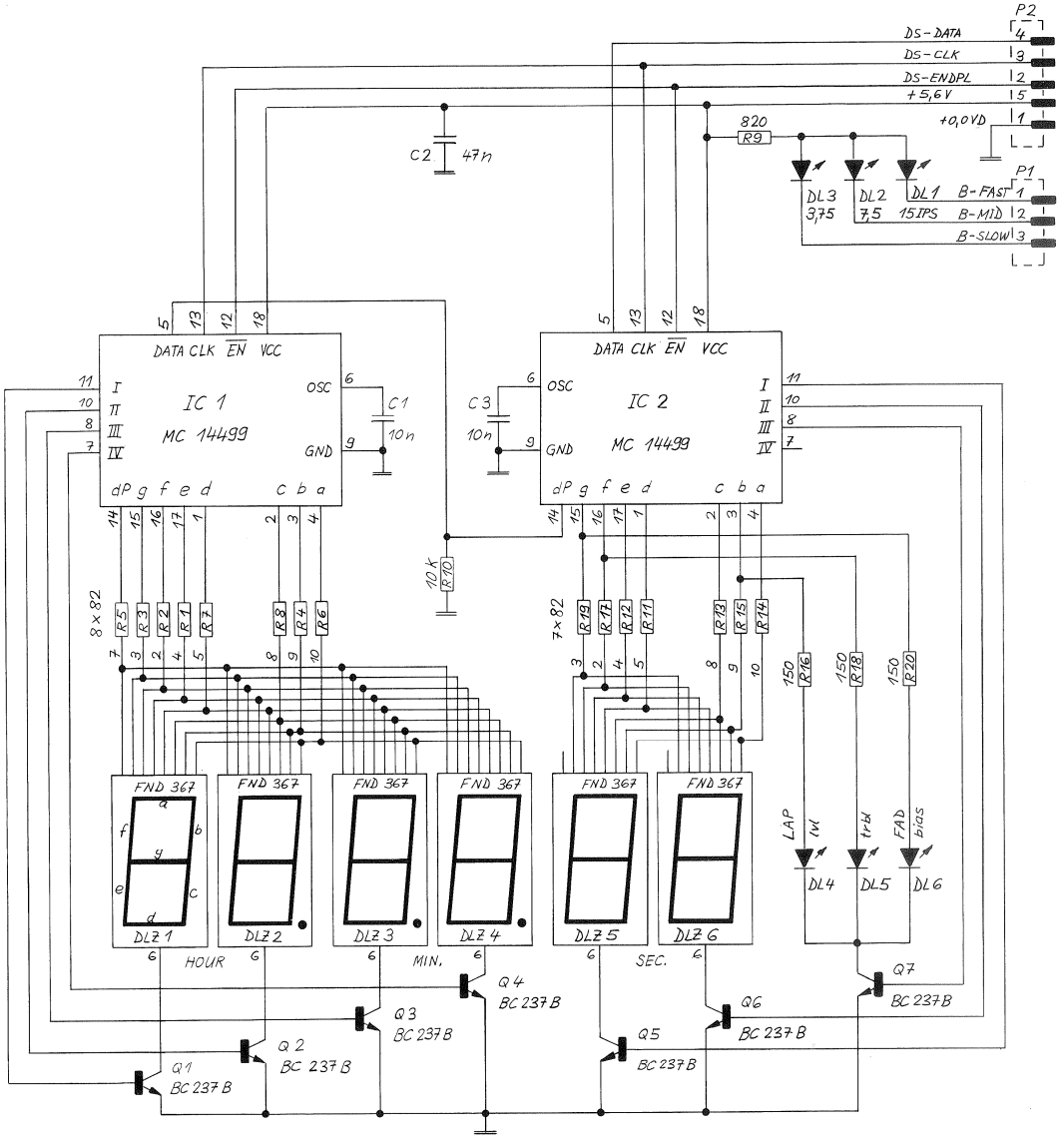

0 25.11.86 GP				
	A 807 GR 31			PAGE 1 OF 1
STUDER	DISPLAY BOARD	SC	1.727.370.00	

DISPLAY BOARD 1.727.370.00

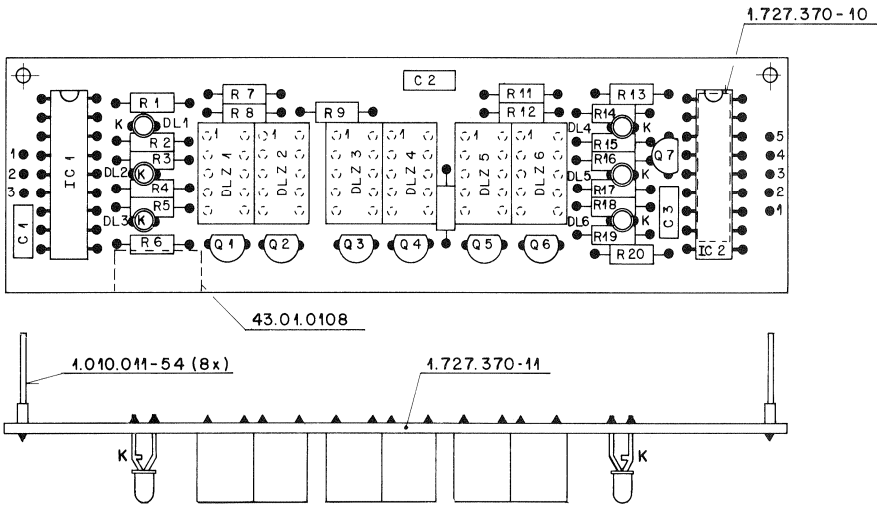

IND.	POS.NO.	PART NO.	VALUE	SPECIFICATIONS / EQUIVALENT	MANUF.
	C.....1	59.06.0103	10 nF	10%, 63 V, PETP	
	C.....2	59.06.0473	47 nF	10%, 63 V, PETP	
	C.....3	59.06.0103	10 nF	10%, 63 V, PETP	
	DL....1	50.04.2129	CQV11-7	LED red D=3 mm	Sie
	DL....2	50.04.2129	CQV11-7	LED red D=3 mm	Sie
	DL....3	50.04.2129	CQV11-7	LED red D=3 mm	Sie
	DL....4	50.04.2129	CQV11-7	LED red D=3 mm	Sie
	DL....5	50.04.2129	CQV11-7	LED red D=3 mm	Sie
	DL....6	50.04.2129	CQV11-7	LED red D=3 mm	Sie
	DLZ...1	73.01.0121	FND 367	Seven Segment Display	GI
	DLZ...2	73.01.0121	FND 367	Seven Segment Display	GI
	DLZ...3	73.01.0121	FND 367	Seven Segment Display	GI
	DLZ...4	73.01.0121	FND 367	Seven Segment Display	GI
	DLZ...5	73.01.0121	FND 367	Seven Segment Display	GI
	DLZ...6	73.01.0121	FND 367	Seven Segment Display	GI
	IC....1	50.07.0010	MC 14499	Display Decoder/Driver	Mot
	IC....2	50.07.0010	MC 14499	Display Decoder/Driver	Mot
	MP....1	1.727.370.11	1 pcs	DISPLAY PCB	
	MP....2	1.010.011.54	8 pcs	Contact pin	
	MP....3	1.727.370.10	1 pcs	No. Label	
	MP....4	43.01.0108	1 pcs	ESE Warning label	
	Q.....1	50.03.0436	BC237B	BC547B, BC550B NPN	
	Q.....2	50.03.0436	BC237B	BC547B, BC550B NPN	
	Q.....3	50.03.0436	BC237B	BC547B, BC550B NPN	
	Q.....4	50.03.0436	BC237B	BC547B, BC550B NPN	
	Q.....5	50.03.0436	BC237B	BC547B, BC550B NPN	
	Q.....6	50.03.0436	BC237B	BC547B, BC550B NPN	
	Q.....7	50.03.0436	BC237B	BC547B, BC550B NPN	
	R.....1	57.11.4820	82 Ohm	2%, 0.25W, MF	
	R.....2	57.11.4820	82 Ohm	2%, 0.25W, MF	
	R.....3	57.11.4820	82 Ohm	2%, 0.25W, MF	

IND.	POS.NO.	PART NO.	VALUE	SPECIFICATIONS / EQUIVALENT	MANUF.
	R.....4	57.11.4820	82 Ohm	2%, 0.25W, MF	
	R.....5	57.11.4820	82 Ohm	2%, 0.25W, MF	
	R.....6	57.11.4820	82 Ohm	2%, 0.25W, MF	
	R.....7	57.11.4820	82 Ohm	2%, 0.25W, MF	
	R.....8	57.11.4820	82 Ohm	2%, 0.25W, MF	
	R.....9	57.11.4821	820 Ohm	2%, 0.25W, MF	
	R....10	57.11.4103	10 kOhm	2%, 0.25W, MF	
	R....11	57.11.4820	82 Ohm	2%, 0.25W, MF	
	R....12	57.11.4820	82 Ohm	2%, 0.25W, MF	
	R....13	57.11.4820	82 Ohm	2%, 0.25W, MF	
	R....14	57.11.4820	82 Ohm	2%, 0.25W, MF	
	R....15	57.11.4820	82 Ohm	2%, 0.25W, MF	
	R....16	57.11.4151	150 Ohm	2%, 0.25W, MF	
	R....17	57.11.4820	82 Ohm	2%, 0.25W, MF	
	R....18	57.11.4151	150 Ohm	2%, 0.25W, MF	
	R....19	57.11.4820	82 Ohm	2%, 0.25W, MF	
	R....20	57.11.4151	150 Ohm	2%, 0.25W, MF	

PETP=Polyester, MF=Metal Film
MANUFACTURER: GI=General Instruments, Mot=Motorola, Sie=Siemens

ORIG 86/08/08

7. Diagrams Audio Section

ESE = Electrostatically sensitive assembly

Contents **GRP/ELM**

Audio Block Diagram (2CH)				7/1
Audio Wiring Diagram (2CH)				7/2
Audio Block Diagram (4CH)				7/3
Head Block Assembly (2CH+TC)	1.050.382.00			7/5
Head Block Assembly (4CH+TC)	1.050.389.00			7/6
Audio Control Board (2CH)	1.727.672.00	ESE	GRP40	7/7
Audio Control Board (4CH)	1.727.681.81	ESE	GRP40	7/13
Monitor Internal (2CH)	1.727.120.00	ESE	GRP36/37	7/19
Monitor Internal (4CH)	1.727.641.00	ESE	GRP36/37	7/21
Audio Electronics Board	1.727.470.00	ESE	GRP41/42	7/23
Audio Electronics Board HS	1.727.479.00	ESE	GRP41/42	7/23
Audio Electronics Board TD	1.727.471.00	ESE	GRP41/42	7/31
Audio Electronics Board 2/2 VUK	1.727.472.00	ESE	GRP41/42	7/39
Audio Electronics Board 2/2 VUK HS	1.727.477.00	ESE	GRP41/42	7/39
Audio Electronics Board PBO	1.727.465.83	ESE	GRP41/42	7/51
Output Connector (2CH)	1.727.731.00		GRP1	7/54
Input Connector (2CH)	1.727.732.00		GRP1	7/55
Mic. Connector (2CH)	1.727.733.00		GRP1	7/56
TC-Input/Output Connector	1.727.730.00		GRP1	7/57
Audio Line Connector (4CH)	1.727.616.00		GRP1	7/58
Line Input Connector Mono	1.727.241.00		GRP1/11,12	7/59
Line Output Connector Mono	1.727.240.00		GRP1/9,10	7/60
Mic. Input Connector Mono	1.727.242.00		GRP1/13,14	7/61
Mono/Stereo Switch Block Diagram (2CH)	1.727.440.00			7/63
Mono/Stereo Input Amplifier with Test Generator (2CH)	1.727.441.00	ESE	GRP44	7/65
Mono/Stereo Output Amplifier Board (2CH)	1.727.442.00	ESE	GRP45	7/67
Mono/Stereo Adjustment Unit with Generator (2CH)	1.727.443.00		GRP46	7/69
Mono/Stereo Switch Block Diagram (2CH)	1.727.450.00			7/70
Mono/Stereo Input Amplifier Board (2CH)	1.727.451.00	ESE	GRP44	7/71
Mono/Stereo Output Amplifier Board (2CH)	1.727.452.00	ESE	GRP45	7/73
Mono/Stereo Adjustment Unit (2CH)	1.727.453.00		GRP44	7/75
Mono/Stereo Adjustment PBO Unit (2CH)	1.727.454.00		GRP46	7/76
Preamplifier Board (2CH)	1.727.430.00	ESE	GRP43	7/77
Audio Insert Interface Set	1.727.431.00			7/79
Record Insert Amplifier (2CH)	1.727.432.00	ESE	GRP48	7/81
Reproduce Insert Amplifier (2CH)	1.727.433.00	ESE	GRP49	7/83
NRS Control Board	1.727.686.00	ESE	GRP47	7/85
Wiring Diagram External VU-Panel (2CH)	1.727.926.00			7/87
VU-Panel Board (2CH)	1.727.928.83	ESE	GRP92	7/89
VU-Panel Board Mono	1.727.938.83	ESE	GRP92	7/93
VU-Panel Board (4CH)	1.727.945.82	ESE	GRP94	7/97

Inter Connection Board (4CH) ..... 1.727.946.00 ..... 7/102
Wiring Diagram Stereo Monitor Panel ..... 1.727.096.00 ..... 7/103

Monitor Board ..... 1.727.910.81 ESE 7/105
Monitor VU Board ..... 1.727.965.00 ESE 7/109
Monitor VU Panel ..... 1.727.960.00 ..... 7/112
Monitor VU Board Mono ..... 1.727.968.00 ESE 7/113

Wiring Diagram Stereo Monitor VU-Panel ..... 1.727.092.00 ..... 7/117
Loud Speaker Amplifier Board ..... 1.727.966.00 ..... 7/119
Wiring Diagram Time Code Processor Board ..... 1.727.700.00 ..... 7/121
TC Processor Board ..... 1.727.710.21 ESE ..... GRP70 ..... 7/123
Time Code Read Write Unit ..... 1.820.721.87 ESE ..... GRP70/21 ..... 7/125

AUDIO BLOCK DIAGRAM (2CH)

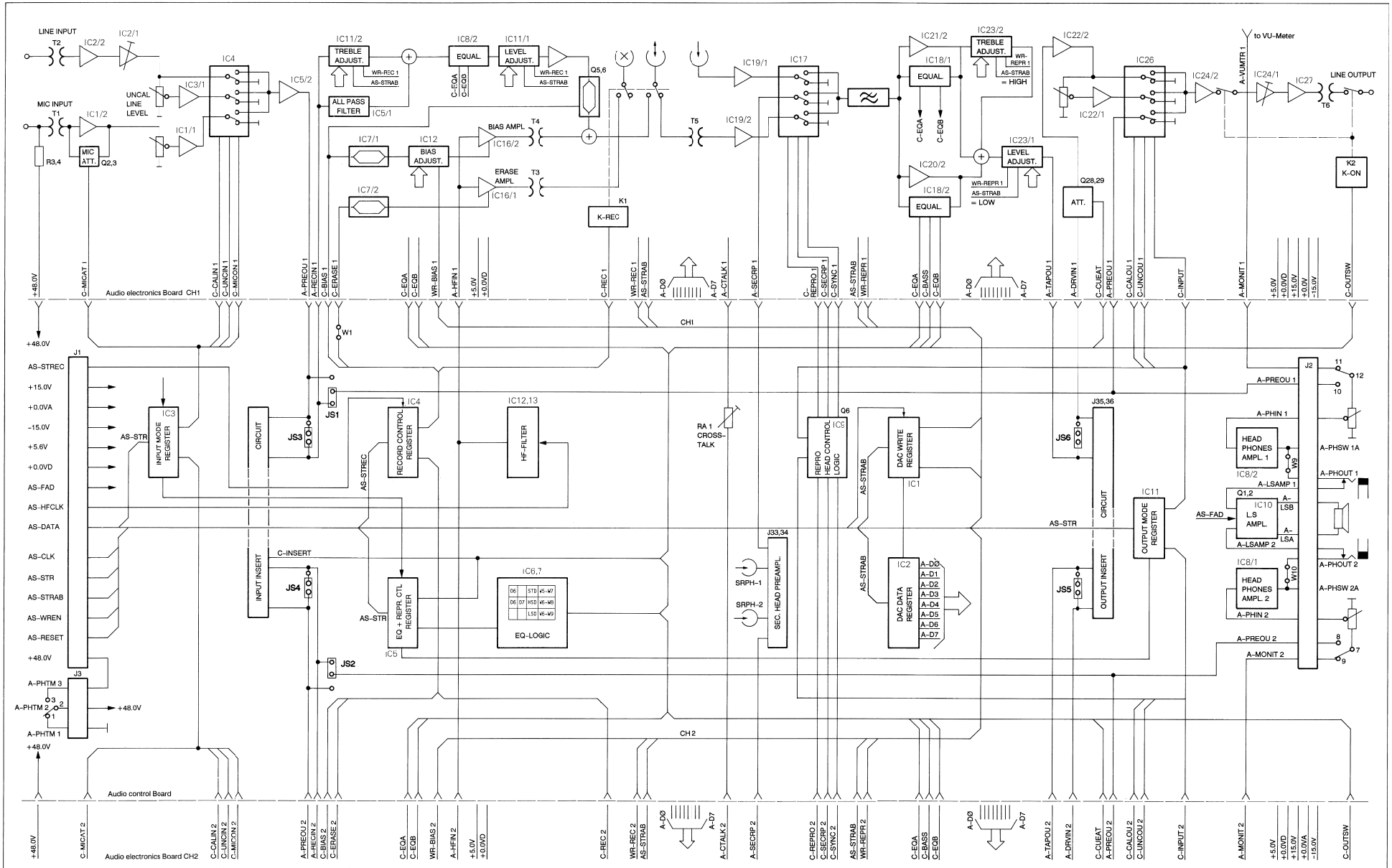

AUDIO WIRING DIAGRAM (2CH)

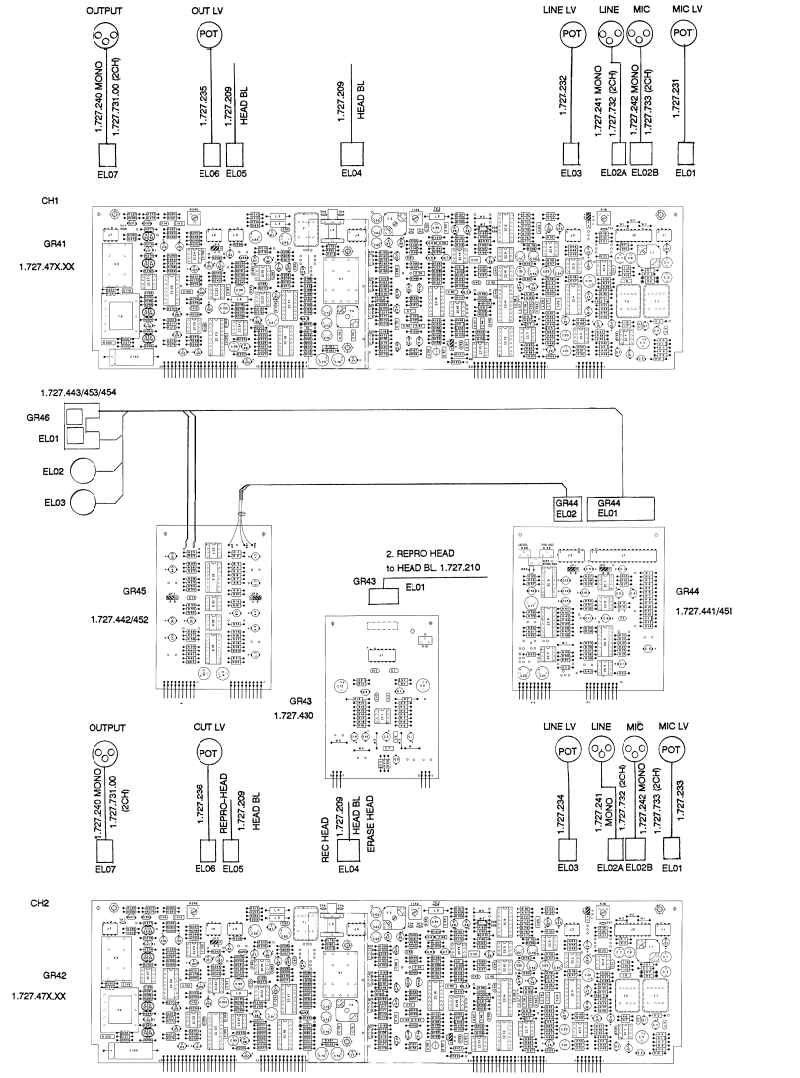

⓪ 10.12.86 WK	17.9.87 WK	. .	. .	. .
	A 807			PAGE OF
STUDER	Verdrahtung, Audio			

AUDIO LEVEL DIAGRAM

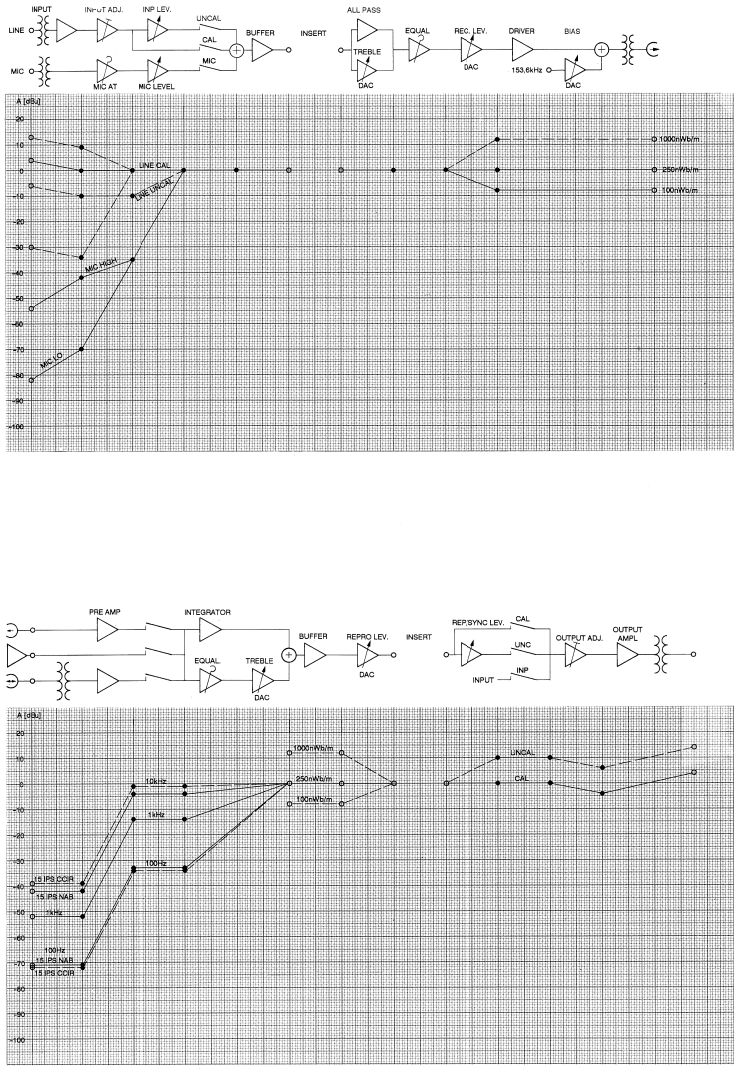

AUDIO BLOCK DIAGRAM (4CH)

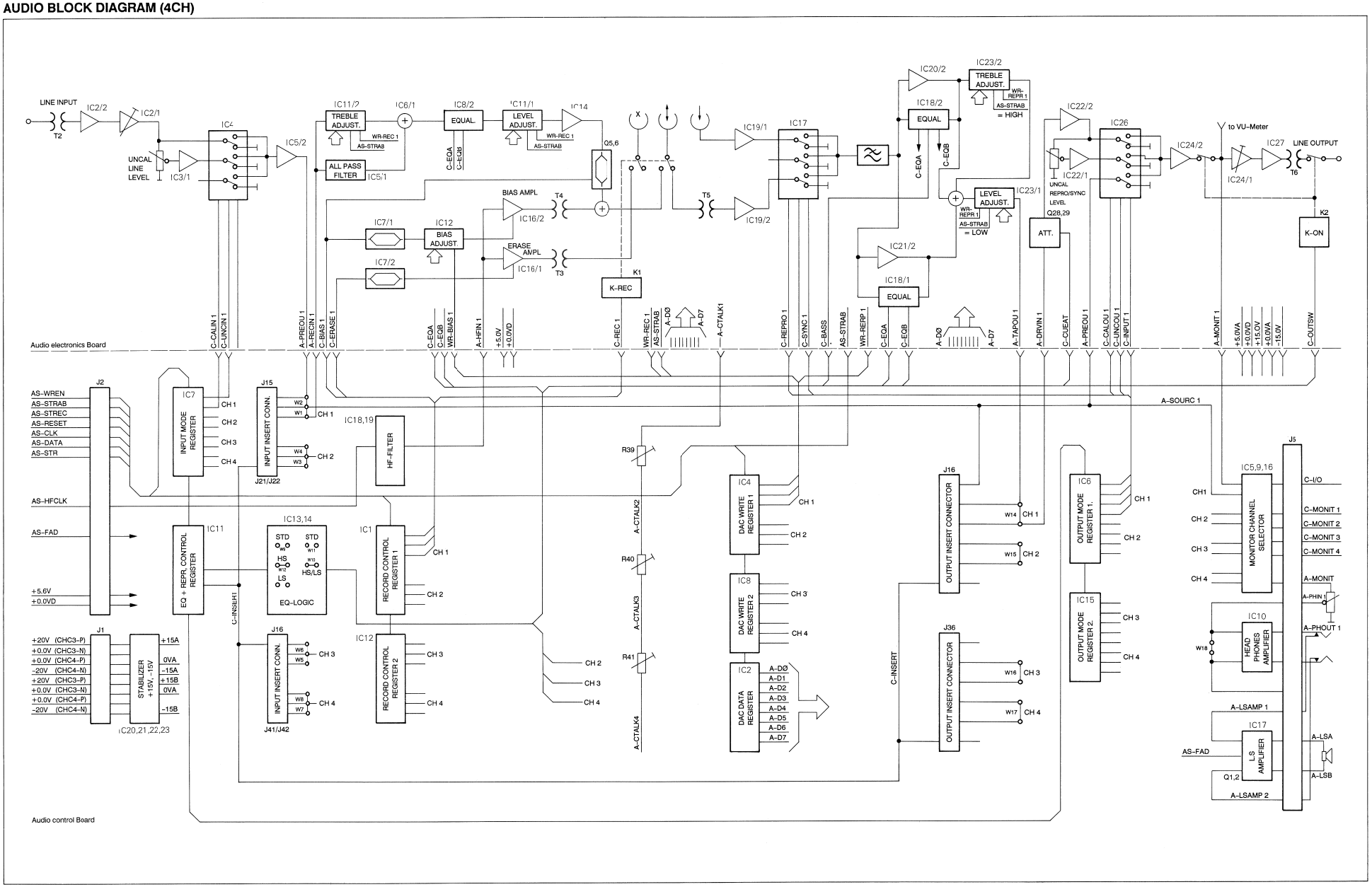

HEAD BLOCK ASSEMBLY (2CH+TC) 1.050.382.00

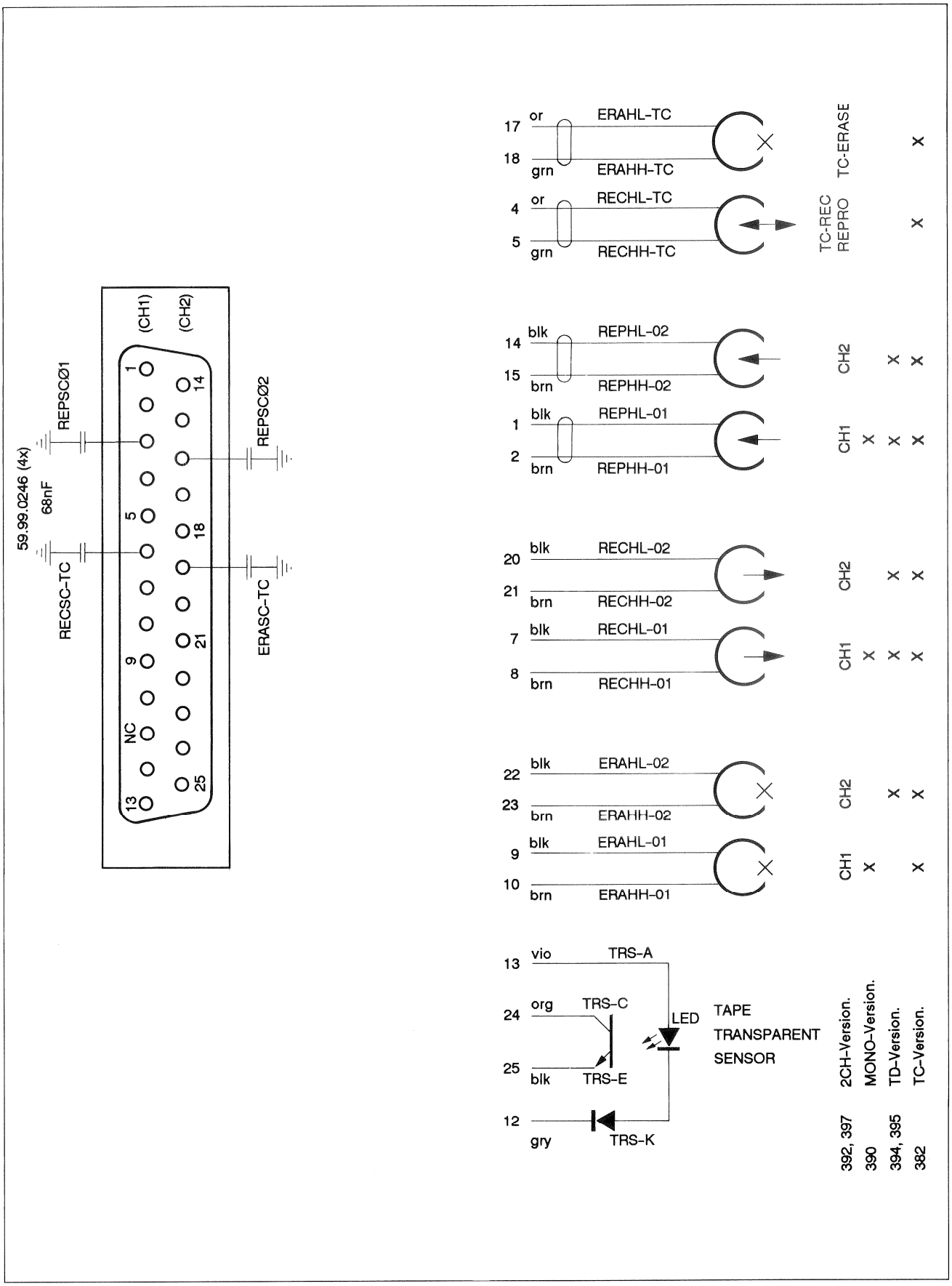

HEAD BLOCK ASSEMBLY (4CH+TC) 1.050.388.00/1.050.389.00

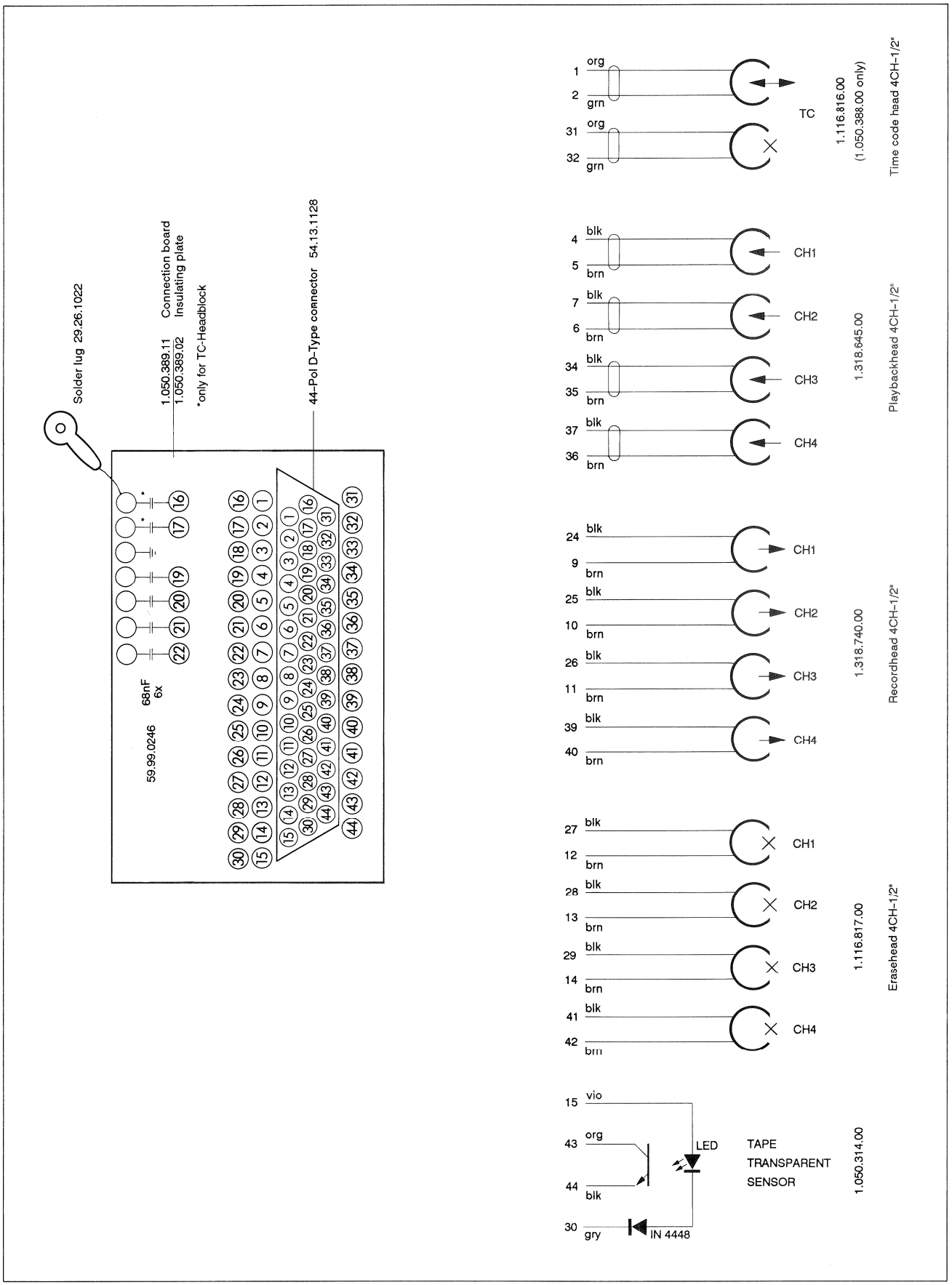

AUDIO CONTROL BOARD (2CH) 1.727.672.00

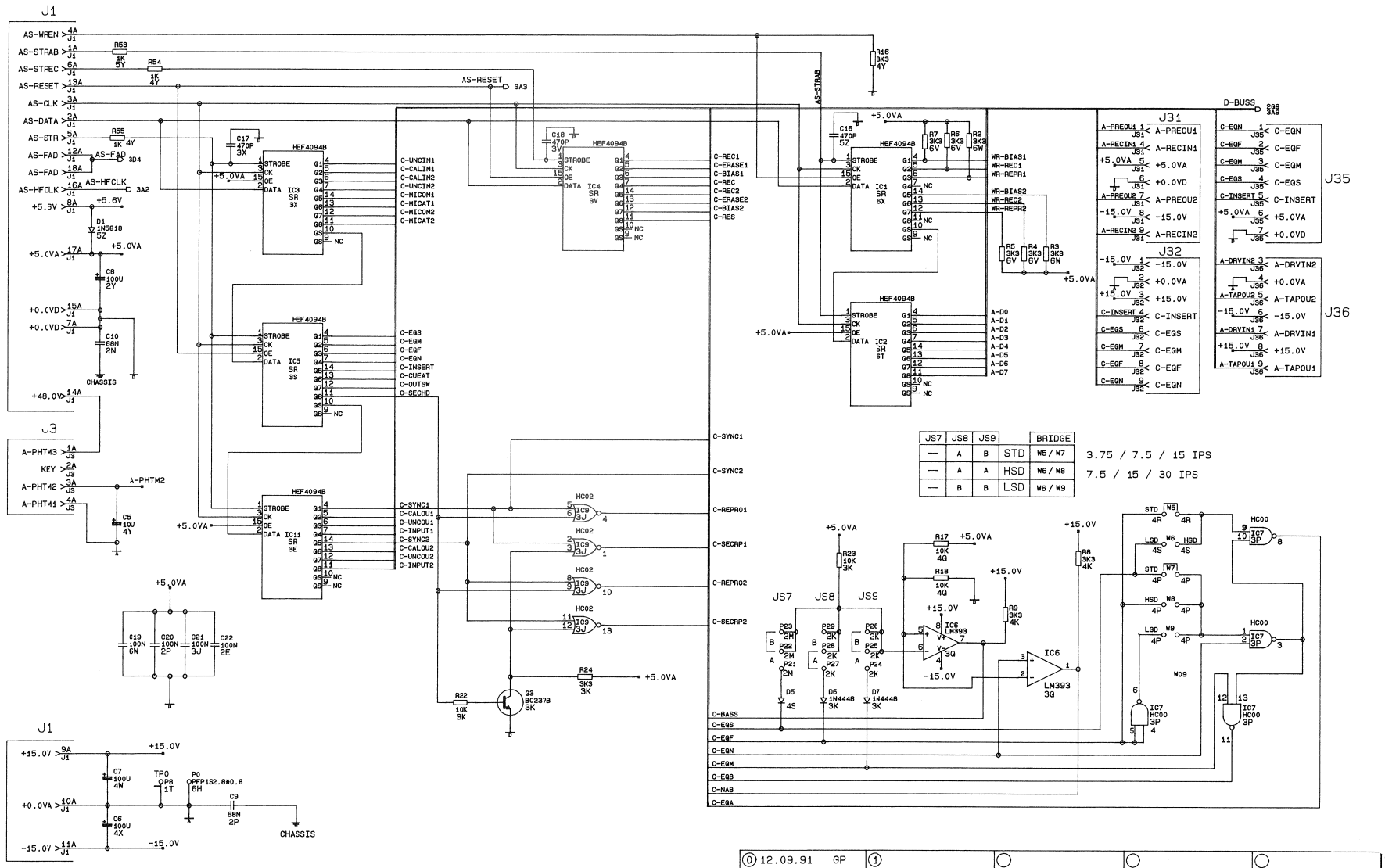

JS7	JS8	JS9		BRIDGE	
—	A	B	STD	W5 / W7	3.75 / 7.5 / 15 IPS
—	A	A	HSD	W6 / W8	7.5 / 15 / 30 IPS
—	B	B	LSD	W9	

⓪ 12.09.91 GP	①			
		A 807 GR40		PAGE 1 OF 3
STUDER	AUDIO CONTROL BOARD 2CH		SC	1.727.672-00

AUDIO CONTROL BOARD (2CH) 1.727.672.00

JUMPER-POSITION JS1, JS2

SOURCE-SIGNAL:

C= FROM PREAMPLIFIER
D= FROM RECORD INPUT

JUMPER-POSITION JS3, JS4, JS5, JS6

A= WITHOUT OPTION
B= WITH OPTION

JUMPER-POSITION W1

2CH-VERSION WITH
A= 2CH-ERASE-HEAD
B= MONO-ERASE-HEAD

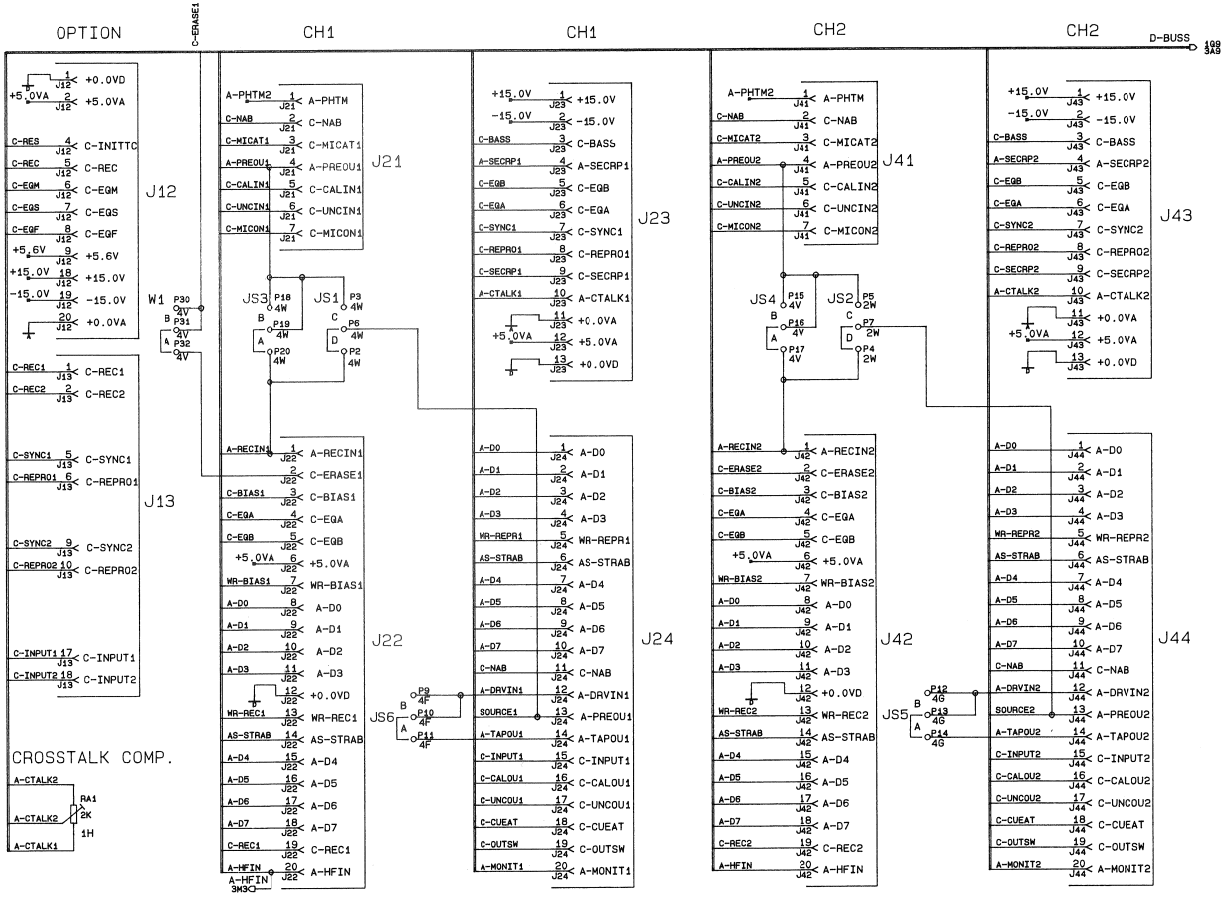

0 12.09.91 GP	1			
	A 807 GR40			PAGE 2 OF 3
STUDER	AUDIO CONTROL BOARD 2CH		SC	1.727.672-00

AUDIO CONTROL BOARD (2CH) 1.727.672.00

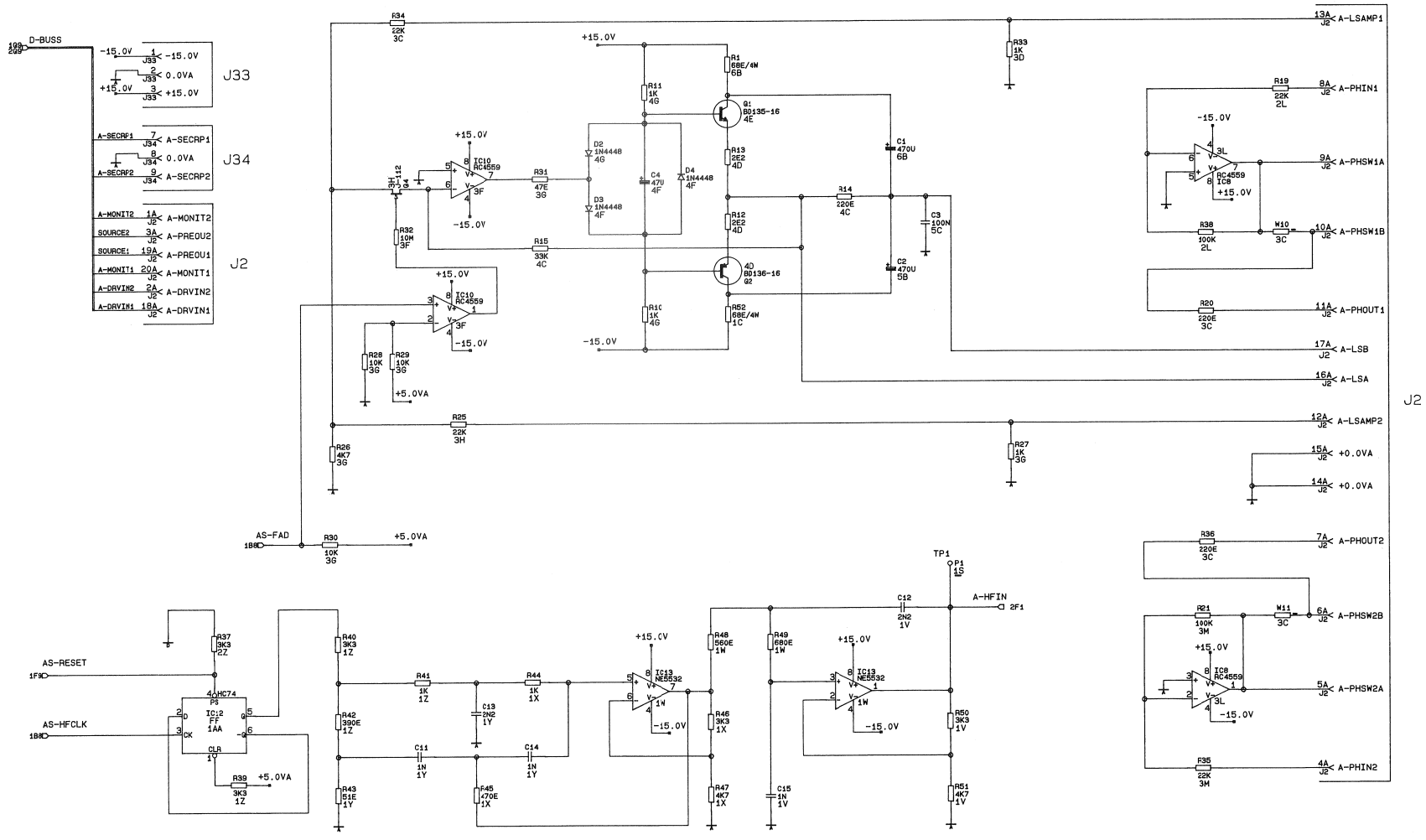

0 12.9.91 GP	1			
	A 807 GR40			PAGE 3 OF 3
STUDER	AUDIO CONTROL BOARD 2CH		SC	1.727.672-00

AUDIO CONTROL BOARD (2CH) 1.727.672.00

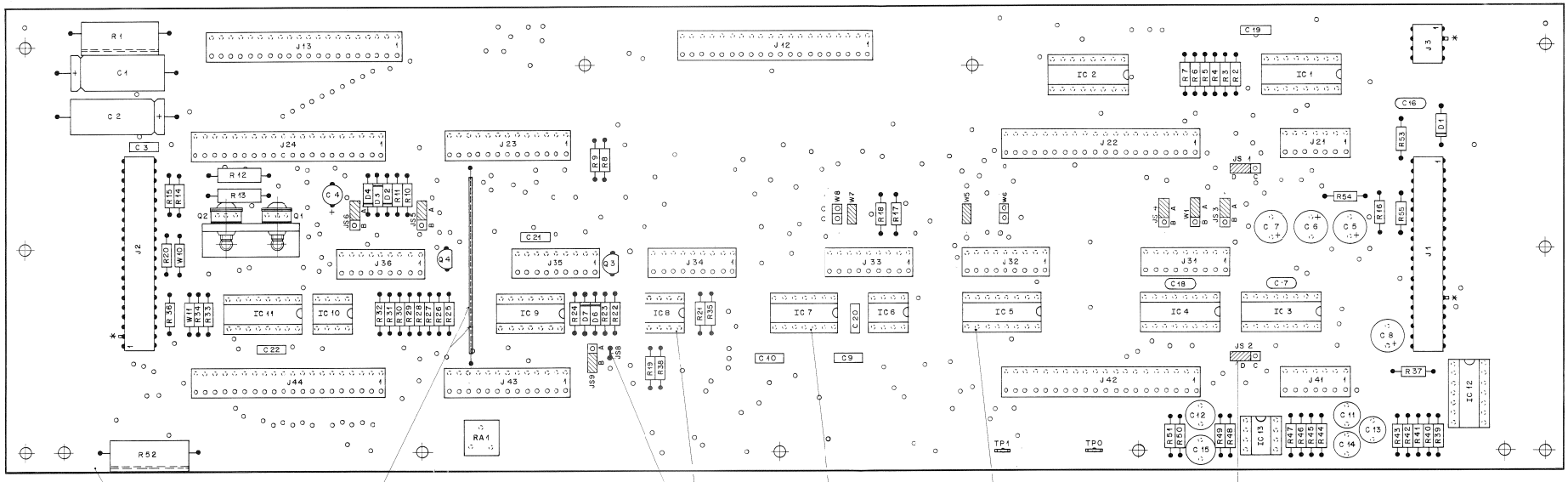

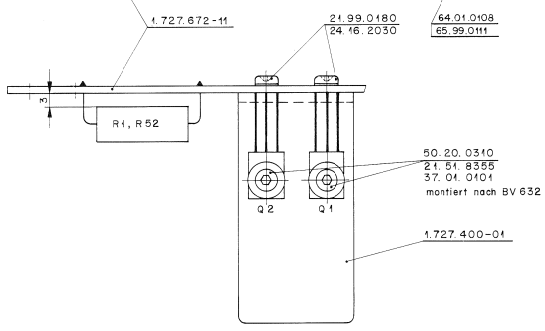

53.03.0166 (4x)

1.010.329-64

53.03.0167 (3x)

53.03.0168 (6x)

Bestückt
54.01.0021 (10x)

Jumper - Position JS3, JS4, JS5, JS6
A = without Option
B = with Option

Jumper - Position W1
2 CH - Version with
A = 2CH - Erase - Head
B = Mono - Erase - Head

Jumper - Position JS1, JS2
Source - Signal
C = from Pre - Amplifier
D = from Record - Input

R49 = CROSSTALK ADJUSTMENT
W1 = C-ERASE1 (TO BE INTERRUPTED FOR 2CH VERSIONS WITH MONO-ERASEHEAD)
JS3 = LINK OF INPUT INSERT CH1 (INTERRUPT FOR ANY INPUT INSERTS)
JS4 = LINK OF INPUT INSERT CH2 (INTERRUPT FOR ANY INPUT INSERTS)
JS5 = LINK OF OUTPUT INSERT CH1 (INTERRUPT FOR ANY OUTPUT INSERTS)
JS6 = LINK OF OUTPUT INSERT CH2 (INTERRUPT FOR ANY OUTPUT INSERTS)
JS7 = SPEED SELECTOR LINK
JS8 = SPEED SELECTOR LINK
JS9 = SPEED SELECTOR LINK

TP0 0.0V
TP1 HF SIGNAL 2.0V/153.6kHz

JS1 A = MONITORING BEFORE INPUT INSERT POINT CH1
B = MONITORING AFTER INPUT INSERT POINT CH1
JS2 A = MONITORING BEFORE INPUT INSERT POINT CH2
B = MONITORING AFTER INPUT INSERT POINT CH2

Jumper - Position JS9, W5 ÷ W8

JS 9	Bridge	Tape Speed
B	W5 / W7	3,75 / 7,5 / 15 IPS
A	W6 / W8	7,5 / 15 / 30 IPS

AUDIO CONTROL BOARD (2CH) 1.727.672.00

IND.	POS.NO.	PART NO.	VALUE	SPECIFICATIONS / EQUIVALENT	MANUF.
	C.....1	59.25.3471	470 uF	-20% 16 V EL	
	C.....2	59.25.3471	470 uF	-20% 16 V EL	
	C.....3	59.06.0104	100 nF	10% 63 V PETP	
	C.....4	59.22.3470	47 uF	-20% 10 V EL	
	C.....5	59.22.0100	10 uF	-20% 63 V EL	
	C.....6	59.22.5101	100 uF	-20% 25 V EL	
	C.....7	59.22.5101	100 uF	-20% 25 V EL	
	C.....8	59.22.5101	100 uF	-20% 25 V EL	
	C.....9	59.06.0683	68 nF	10% 63 V PETP	
	C....10	59.06.0683	68 nF	10% 63 V PETP	
	C....11	59.05.1102	1 nF	1% 160 V PP	
	C....12	59.05.1222	2.2 nF	1% 160 V PP	
	C....13	59.05.1222	2.2 nF	1% 160 V PP	
	C....14	59.05.1102	1 nF	1% 160 V PP	
	C....15	59.05.1102	1 nF	1% 160 V PP	
	C....16	59.32.4471	470 pF	20% 50 V CER	
	C....17	59.32.4471	470 pF	20% 50 V CER	
	C....18	59.32.4471	470 pF	20% 50 V CER	
	C....19	59.06.0104	100 nF	10% 63 V PETP	
	C....20	59.06.0104	100 nF	10% 63 V PETP	
	C....21	59.06.0104	100 nF	10% 63 V PETP	
	C....22	59.06.0104	100 nF	10% 63 V PETP	
	D.....1	50.04.0512	1N5819	30V	Mot
	D.....2	50.04.0125	1N4448	50V	
	D.....3	50.04.0125	1N4448	50V	
	D.....4	50.04.0125	1N4448	50V	
	D.....5		not used		
	D.....6	50.04.0125	1N4448	50V	
	D.....7	50.04.0125	1N4448	50V	
	IC....1	50.07.0018	MC14094	CMOS	Mot
	IC....2	50.07.0018	MC14094	CMOS	Mot
	IC....3	50.07.0018	MC14094	CMOS	Mot
	IC....4	50.07.0018	MC14094	CMOS	Mot
	IC....5	50.07.0018	MC14094	CMOS	Mot
	IC....6	50.05.0283	LM393	Dual Comparator	

IND.	POS.NO.	PART NO.	VALUE	SPECIFICATIONS / EQUIVALENT	MANUF.
	IC....7	50.17.1000	74HC00	HCMOS	
	IC....8	50.09.0107	RC4559	Dual Op. Amp.	
	IC....9	50.17.1002	74HC02	HCMOS	
	IC...10	50.09.0107	RC4559	Dual Op. Amp.	
	IC...11	50.07.0018	MC14094	CMOS	Mot
	IC...12	50.17.1074	74HC74	HCMOS	
	IC...13	50.09.0105	NE5532	Dual Op. Amp.	
	J.....1	54.01.0248	20-POLE	CIS Socket Strip	AMP
	J.....2	54.01.0248	20-POLE	CIS Socket Strip	AMP
	J.....3	54.01.0304	4-POLE	CIS Socket Strip	AMP
	J....12	54.01.0226	20-POLE	CIS Socket Strip	AMP
	J....13	54.01.0226	20-POLE	CIS Socket Strip	AMP
	J....21	54.01.0218	7-POLE	CIS Socket Strip	AMP
	J....22	54.01.0226	20-POLE	CIS Socket Strip	AMP
	J....23	54.01.0292	13-POLE	CIS Socket Strip	AMP
	J....24	54.01.0226	20-POLE	CIS Socket Strip	AMP
	J....31	54.01.0217	9-POLE	CIS Socket Strip	AMP
	J....32	54.01.0217	9-POLE	CIS Socket Strip	AMP
	J....33	54.01.0217	9-POLE	CIS Socket Strip	AMP
	J....34	54.01.0217	9-POLE	CIS Socket Strip	AMP
	J....35	54.01.0217	9-POLE	CIS Socket Strip	AMP
	J....36	54.01.0217	9-POLE	CIS Socket Strip	AMP
	J....41	54.01.0218	7-POLE	CIS Socket Strip	AMP
	J....42	54.01.0226	20-POLE	CIS Socket Strip	AMP
	J....43	54.01.0292	13-POLE	CIS Socket Strip	AMP
	J....44	54.01.0226	20-POLE	CIS Socket Strip	AMP
	JS....1	54.01.0021		Bridge	
	JS....2	54.01.0021		Bridge	
	JS....3	54.01.0021		Bridge	
	JS....4	54.01.0021		Bridge	
	JS....5	54.01.0021		Bridge	
	JS....6	54.01.0021		Bridge	
	JS....7			not used	
	JS....8	1.010.329.64		Wire Bridge, Position "A"	
	JS....9	54.01.0021		Bridge	

IND.	POS.NO.	PART NO.	VALUE	SPECIFICATIONS / EQUIVALENT	MANUF.
	MP....1	1.727.672.11	1 pce	Audio Control PCB	St
	MP....2	1.727.400.01	1 pce	Heatsink	St
	MP....3	1.727.672.10	1 pce	No. label	St
	MP....4	21.99.0180	2 pcs	Screw M3 * 5	
	MP....5	21.51.8355	2 pcs	Screw M3 * 8	
	MP....6	24.16.2030	2 pcs	Lock washer	
	MP....7	37.01.0101	4 pcs	Lock washer	St
	MP....8	43.01.0108	1 pce	ESE warning label	St
	MP....9	54.01.0020	32 pcs	Contact pin	
	MP...10	50.20.0310	2 pcs	TO 126 mica-washer	
	MP...11	64.01.0108	56 mm	Wire D= 0.8mm	
	MP...12	65.99.0111	48 mm	PTFE Insulating tube	
	Q.....1	50.03.0495	BD135-16	NPN	
	Q.....2	50.03.0510	BD136-16	PNP	
	Q.....3	50.03.0436	BC237B	BC547B, BC550B NPN	
	Q.....4	50.03.0350	MPF4392	J112 FET	Mot,Six
	R.....1	57.56.5680	68 Ohm	2%, 4 W, DR	
	R.....2	57.11.3332	3.3 kOhm	2%, 0.25W, MF	
	R.....3	57.11.3332	3.3 kOhm	2%, 0.25W, MF	
	R.....4	57.11.3332	3.3 kOhm	2%, 0.25W, MF	
	R.....5	57.11.3332	3.3 kOhm	2%, 0.25W, MF	
	R.....6	57.11.3332	3.3 kOhm	2%, 0.25W, MF	
	R.....7	57.11.3332	3.3 kOhm	2%, 0.25W, MF	
	R.....8	57.11.3332	3.3 kOhm	2%, 0.25W, MF	
	R.....9	57.11.3332	3.3 kOhm	2%, 0.25W, MF	
	R....10	57.11.3102	1 kOhm	2%, 0.25W, MF	
	R....11	57.11.3102	1 kOhm	2%, 0.25W, MF	
	R....12	57.13.4229	2.2 Ohm	2%, 0.5 W, MF	
	R....13	57.13.4229	2.2 Ohm	2%, 0.5 W, MF	
	R....14	57.11.3221	220 Ohm	2%, 0.25W, MF	
	R....15	57.11.3333	33 kOhm	2%, 0.25W, MF	
	R....16	57.11.3332	3.3 kOhm	2%, 0.25W, MF	
	R....17	57.11.3103	10 kOhm	2%, 0.25W, MF	
	R....18	57.11.3103	10 kOhm	2%, 0.25W, MF	
	R....19	57.11.3223	22 kOhm	2%, 0.25W, MF	

IND.	POS.NO.	PART NO.	VALUE	SPECIFICATIONS / EQUIVALENT	MANUF.
	R....20	57.11.3221	220 Ohm	2%, 0.25W, MF	
	R....21	57.11.3104	100 kOhm	2%, 0.25W, MF	
	R....22	57.11.3103	10 kOhm	2%, 0.25W, MF	
	R....23	57.11.3103	10 kOhm	2%, 0.25W, MF	
	R....24	57.11.3332	3.3 kOhm	2%, 0.25W, MF	
	R....25	57.11.3223	22 kOhm	2%, 0.25W, MF	
	R....26	57.11.3472	4.7 kOhm	2%, 0.25W, MF	
	R....27	57.11.3102	1 kOhm	2%, 0.25W, MF	
	R....28	57.11.3103	10 kOhm	2%, 0.25W, MF	
	R....29	57.11.3103	10 kOhm	2%, 0.25W, MF	
	R....30	57.11.3103	10 kOhm	2%, 0.25W, MF	
	R....31	57.11.3470	47 Ohm	2%, 0.25W, MF	
	R....32	57.11.5106	10 MOhm	5%, 0.25W, MF	
	R....33	57.11.3102	1 kOhm	2%, 0.25W, MF	
	R....34	57.11.3223	22 kOhm	2%, 0.25W, MF	
	R....35	57.11.3223	22 kOhm	2%, 0.25W, MF	
	R....36	57.11.3221	220 Ohm	2%, 0.25W, MF	
	R....37	57.11.3332	3.3 kOhm	2%, 0.25W, MF	
	R....38	57.11.3104	100 kOhm	2%, 0.25W, MF	
	R....39	57.11.3332	3.3 kOhm	2%, 0.25W, MF	
	R....40	57.11.3332	3.3 kOhm	2%, 0.25W, MF	
	R....41	57.11.3102	1 kOhm	2%, 0.25W, MF	
	R....42	57.11.3391	390 Ohm	2%, 0.25W, MF	
	R....43	57.11.3510	51 Ohm	1%, 0.25W, MF	
	R....44	57.11.3102	1 kOhm	2%, 0.25W, MF	
	R....45	57.11.3471	470 Ohm	2%, 0.25W, MF	
	R....46	57.11.3332	3.3 kOhm	2%, 0.25W, MF	
	R....47	57.11.3472	4.7 kOhm	2%, 0.25W, MF	
	R....48	57.11.3561	560 Ohm	2%, 0.25W, MF	
	R....49	57.11.3681	680 Ohm	2%, 0.25W, MF	
	R....50	57.11.3332	3.3 kOhm	2%, 0.25W, MF	
	R....51	57.11.3472	4.7 kOhm	2%, 0.25W, MF	
	R....52	57.56.5680	68 Ohm	2%, 4 W, DR	
	R....53	57.11.3102	1 kOhm	2%, 0.25W, MF	
	R....54	57.11.3102	1 kOhm	2%, 0.25W, MF	
	R....55	57.11.3102	1 kOhm	2%, 0.25W, MF	

IND.	POS.NO.	PART NO.	VALUE	SPECIFICATIONS / EQUIVALENT	MANUF.
	RA....1	58.01.8202	2 kOhm	Potmeter PMG	
	TP....0	54.02.0320		PLUG 2.8*0.8	
	TP....1	54.02.0320		PLUG 2.8*0.8	
	W.....1	54.01.0021		Bridge	
	W.....5	54.01.0021		Bridge, used for 3.75 / 7.5 / 15 IPS	
	W.....6			Bridge, used for 7.5 / 15 / 30 IPS	
	W.....7	54.01.0021		Bridge, used for 3.75 / 7.5 / 15 IPS	
	W.....8			Bridge, used for 7.5 / 15 / 30 IPS	
	W.....9			not used	
	W....10	57.11.3000		Wire Bridge	
	W....11	57.11.3000		Wire Bridge	
	XIC...1	53.03.0168	16 pol	IC Socket	
	XIC...2	53.03.0168	16 pol	IC Socket	
	XIC...3	53.03.0168	16 pol	IC Socket	
	XIC...4	53.03.0168	16 pol	IC Socket	
	XIC...5	53.03.0168	16 pol	IC Socket	
	XIC...6	53.03.0166	8 pol	IC Socket	
	XIC...7	53.03.0167	14 pol	IC Socket	
	XIC...8	53.03.0166	8 pol	IC Socket	
	XIC...9	53.03.0167	14 pol	IC Socket	
	XIC..10	53.03.0166	8 pol	IC Socket	
	XIC..11	53.03.0168	16 pol	IC Socket	
	XIC..12	53.03.0167	14 pol	IC Socket	
	XIC..13	53.03.0166	8 pol	IC Socket	

EL=Electrolytic, PP=Polypropylen, SI=Silicon , MF=Metal Film
PETP=Polyester, SAL=Solid Aluminium

MANUFACTURER:Mot=Motorola, St=Studer, Six=Siliconix

ORIG 91/09/12

AUDIO CONTROL BOARD (4CH) 1.727.681.81

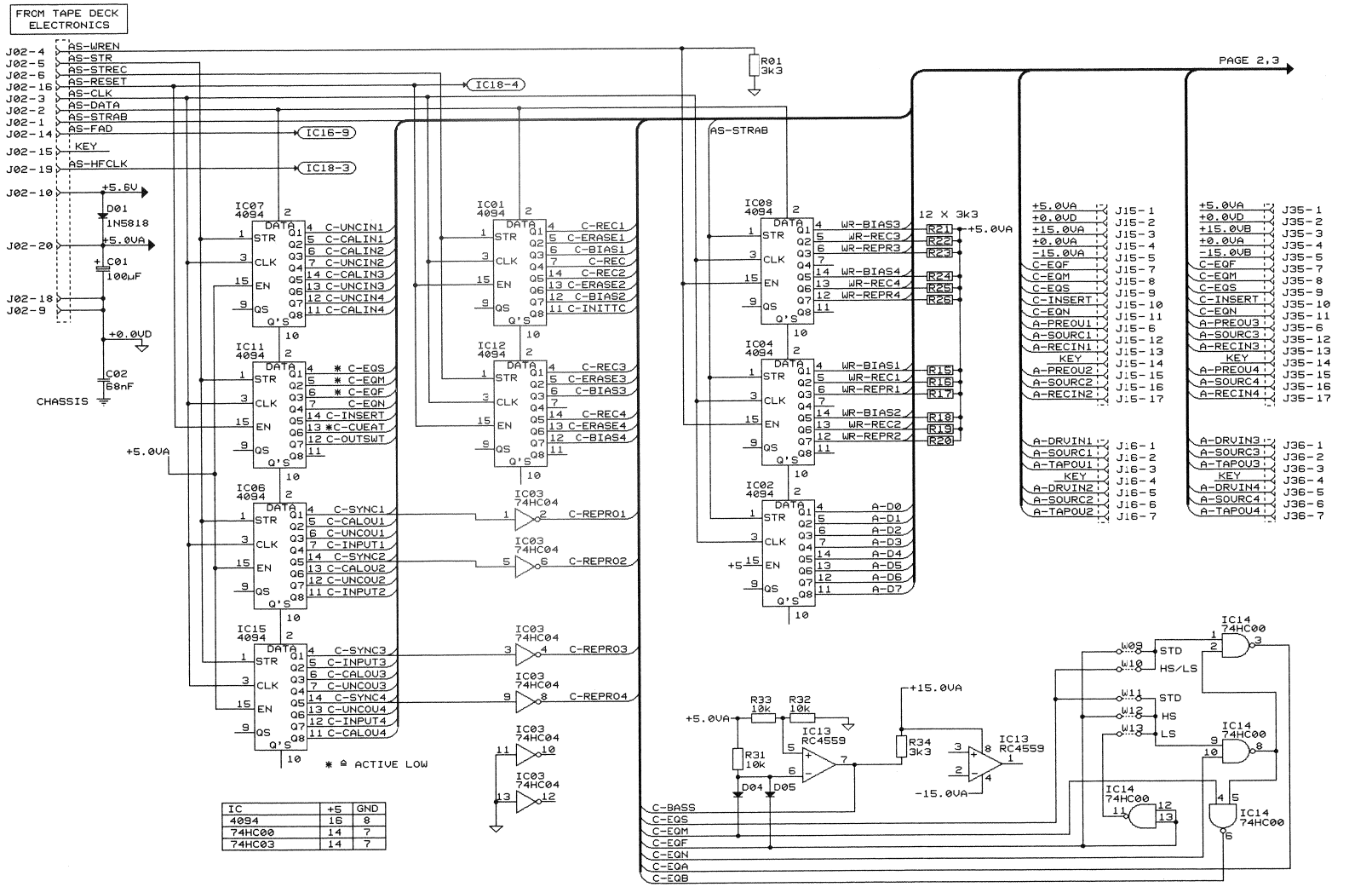

AUDIO CONTROL BOARD (4CH) 1.727.681.81

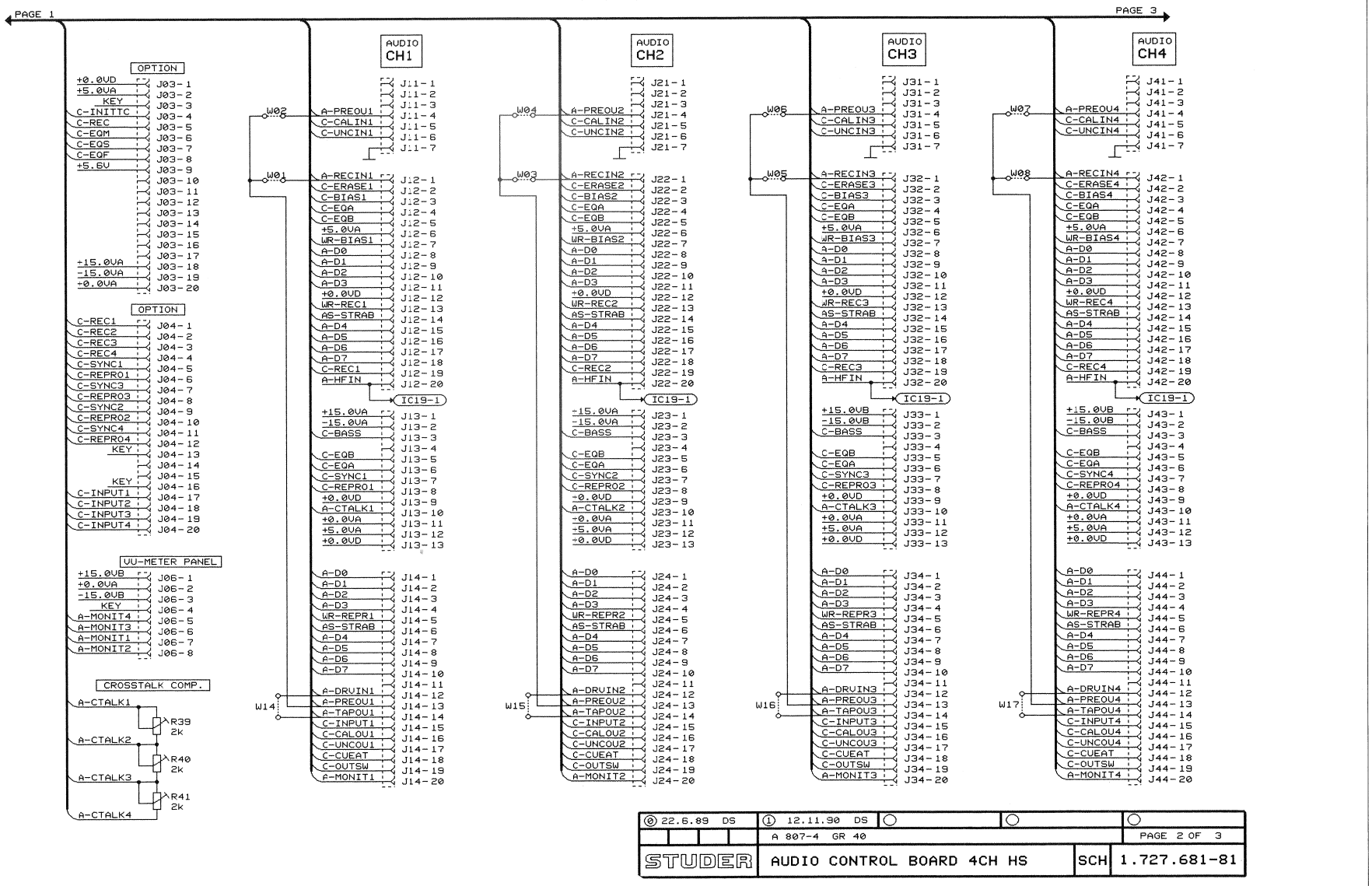

AUDIO CONTROL BOARD (4CH) 1.727.681.81

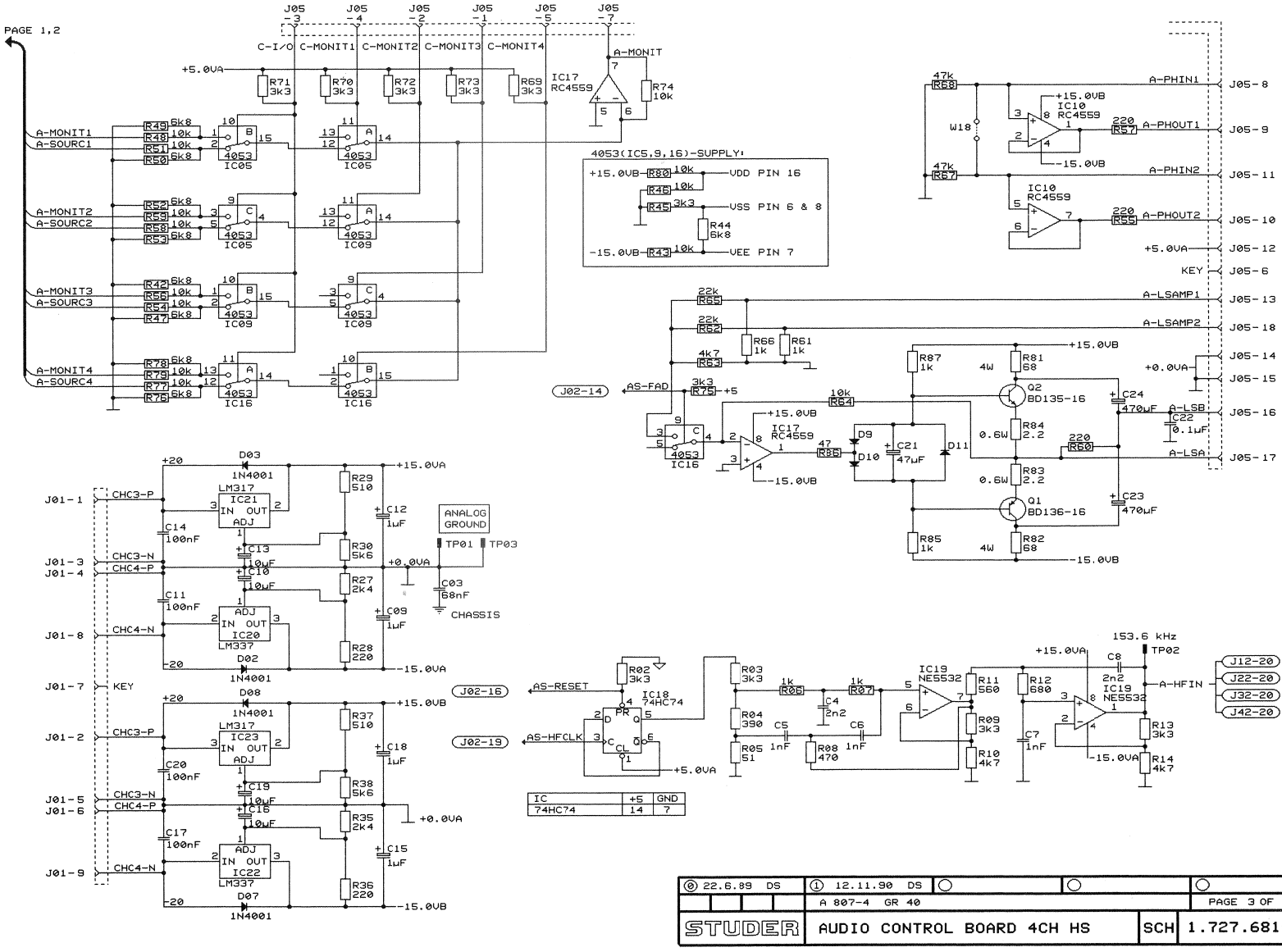

⓪ 22.6.89 DS	① 12.11.90 DS			
	A 807-4 GR 40			PAGE 3 OF 3
STUDER	AUDIO CONTROL BOARD 4CH HS		SCH	1.727.681-81

AUDIO CONTROL BOARD (4CH) 1.727.681.81

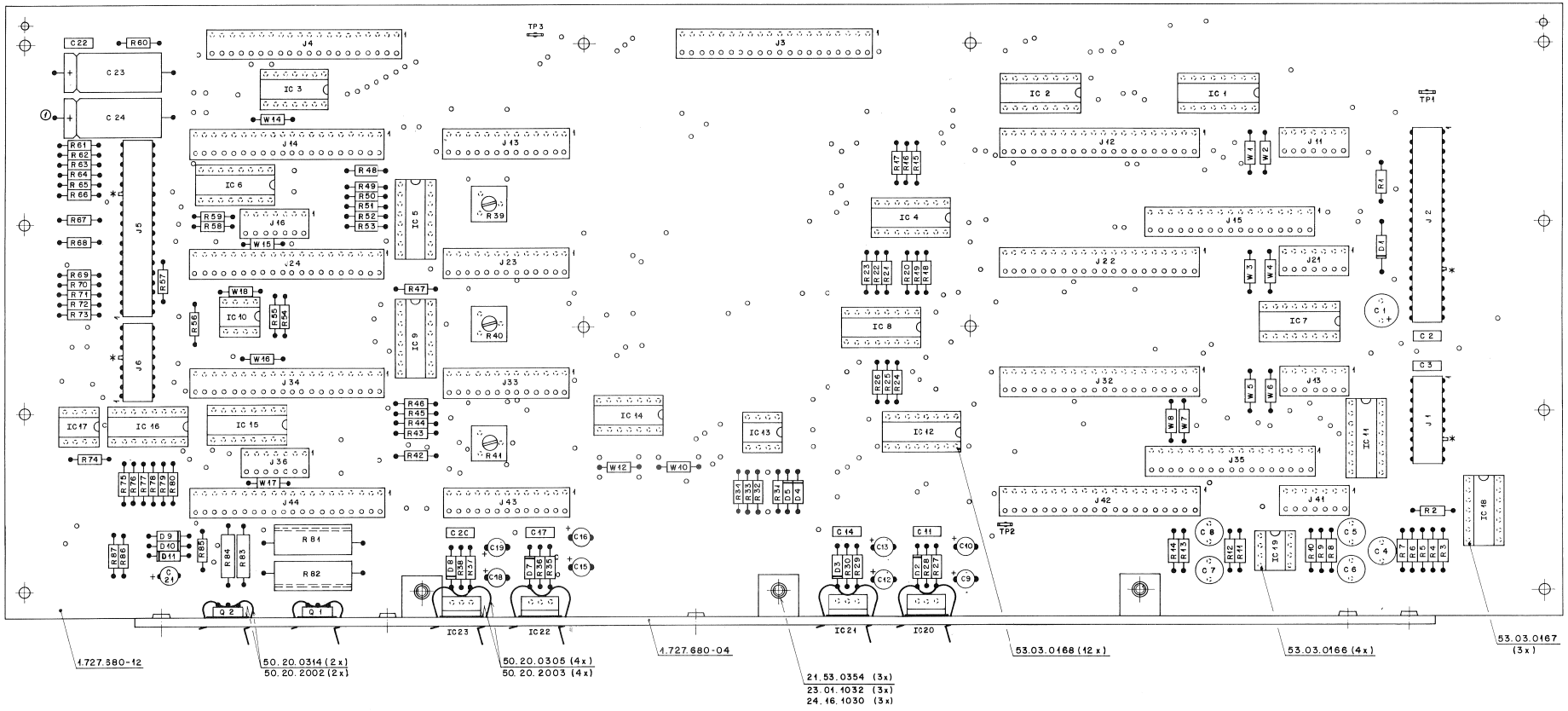

IND.	POS.NO.	PART NO.	VALUE	SPECIFICATIONS / EQUIVALENT	MANUF.
	C....1	59.22.5101	100 uF	-20% 25 V EL	
	C....2	59.06.0683	68 nF	10% 63 V PETP	
	C....3	59.06.0683	68 nF	10% 63 V PETP	
	C....4	59.05.1222	2.2 nF	1% 160 V PP	
	C....5	59.05.1102	1 nF	1% 160 V PP	
	C....6	59.05.1102	1 nF	1% 160 V PP	
	C....7	59.05.1102	1 nF	1% 160 V PP	
	C....8	59.05.1222	2.2 nF	1% 160 V PP	
	C....9	59.22.8109	1 uF	-20% 50 V EL	
	C....10	59.22.6100	10 uF	-20% 35 V EL	
	C....11	59.06.0104	100 nF	10% 63 V PETP	
	C....12	59.22.8109	1 uF	-20% 50 V EL	
	C....13	59.22.6100	10 uF	-20% 35 V EL	
	C....14	59.06.0104	100 nF	10% 63 V PETP	
	C....15	59.22.8109	1 uF	-20% 50 V EL	
	C....16	59.22.6100	10 uF	-20% 35 V EL	
	C....17	59.06.0104	100 nF	10% 63 V PETP	
	C....18	59.22.8109	1 uF	-20% 50 V EL	
	C....19	59.22.6100	10 uF	-20% 35 V EL	
	C....20	59.06.0104	100 nF	10% 63 V PETP	
	C....21	59.22.3470	47 uF	-20% .0 V EL	
	C....22	59.06.0104	100 nF	10% 63 V PETP	
	C....23	59.25.3471	470 uF	-20% .6 V EL	
	C....24	59.25.3471	470 uF	-20% .6 V EL	
	D....1	50.04.0512	1N5818	30V	MOT
	D....2	50.04.0122	1N4001	50V	
	D....3	50.04.0122	1N4001	50V	
	D....4	50.04.0125	1N4448	50V	
	D....5	50.04.0125	1N4448	50V	
	D....6		not used		
	D....7	50.04.0122	1N4001	50V	
	D....8	50.04.0122	1N4001	50V	
	D....9	50.04.0125	1N4448	50V	
	D....10	50.04.0125	1N4448	50V	
	D....11	50.04.0125	1N4448	50V	

IND.	POS.NO.	PART NO.	VALUE	SPECIFICATIONS / EQUIVALENT	MANUF.
	IC....1	50.07.0018	MC14094	8-Bit Shift/Store Register CMOS	MOT
	IC....2	50.07.0018	MC14094	8-Bit Shift/Store Register CMOS	MOT
	IC....3	50.17.1004	74HC04	Hex Inverter HCMOS	
	IC....4	50.07.0018	MC14094	8-Bit Shift/Store Register CMOS	MOT
	IC....5	50.07.0015	MC14053	Triple 2-Ch Analog Multiplexer	MOT
	IC....6	50.07.0018	MC14094	8-Bit Shift/Store Register CMOS	MOT
	IC....7	50.07.0018	MC14094	8-Bit Shift/Store Register CMOS	MOT
	IC....8	50.07.0018	MC14094	8-Bit Shift/Store Register CMOS	MOT
	IC....9	50.07.0015	MC14053	Triple 2-Ch Analog Multiplexer	MOT
	IC....10	50.09.0107	RC4559	Dual OpAmp	RCA
	IC....11	50.07.0018	MC14094	8-Bit Shift/Store Register CMOS	MOT
	IC....12	50.07.0018	MC14094	8-Bit Shift/Store Register CMOS	MOT
	IC....13	50.09.0107	RC4559	Dual OpAmp	RCA
	IC....14	50.17.1000	74HC00	Quad NAND-Gate HCMOS	
	IC....15	50.07.0018	MC14094	8-Bit Shift/Store Register CMOS	MOT
	IC....16	50.07.0015	MC14053	Triple 2-Ch Analog Multiplexer	MOT
	IC....17	50.09.0107	RC4559	Dual OpAmp	RCA
	IC....18	50.17.1074	74HC74	Dual D-Flip-Flop	
	IC....19	50.09.0105	NE 5532	Dual OpAmp Low Noise	NS
	IC....20	50.10.0105	LM 337	Negative Voltage Regulator	
	IC....21	50.10.0104	LM 317	Positive Voltage Regulator	
	IC....22	50.10.0105	LM 337	Negative Voltage Regulator	
	IC....23	50.10.0104	LM 317	Positive Voltage Regulator	
	J....1	54.01.0212	9-Pole	CIS Socket Strip	AMP
	J....2	54.01.0248	20-Pole	CIS Socket Strip	AMP
	J....3	54.01.0226	20-Pole	CIS Socket Strip	AMP
	J....4	54.01.0226	20-Pole	CIS Socket Strip	AMP
	J....5	54.01.0247	18-Pole	CIS Socket Strip	AMP
	J....6	54.01.0306	8-Pole	CIS Socket Strip	AMP
	J....11	54.01.0218	7-Pole	CIS Socket Strip	AMP
	J....12	54.01.0226	20-Pole	CIS Socket Strip	AMP
	J....13	54.01.0292	13-Pole	CIS Socket Strip	AMP
	J....14	54.01.0226	20-Pole	CIS Socket Strip	AMP
	J....15	54.01.0295	17-Pole	CIS Socket Strip	AMP
	J....16	54.01.0218	7-Pole	CIS Socket Strip	AMP
	J....21	54.01.0218	7-Pole	CIS Socket Strip	AMP

IND.	POS.NO.	PART NO.	VALUE	SPECIFICATIONS / EQUIVALENT	MANUF.
	J....22	54.01.0226	20-Pole	CIS Socket Strip	AMP
	J....23	54.01.0292	13-Pole	CIS Socket Strip	AMP
	J....24	54.01.0226	20-Pole	CIS Socket Strip	AMP
	J....31	54.01.0218	7-Pole	CIS Socket Strip	AMP
	J....32	54.01.0226	20-Pole	CIS Socket Strip	AMP
	J....33	54.01.0292	13-Pole	CIS Socket Strip	AMP
	J....34	54.01.0226	20-Pole	CIS Socket Strip	AMP
	J....35	54.01.0295	17-Pole	CIS Socket Strip	AMP
	J....36	54.01.0218	7-Pole	CIS Socket Strip	AMP
	J....41	54.01.0218	7-Pole	CIS Socket Strip	AMP
	J....42	54.01.0226	20-Pole	CIS Socket Strip	AMP
	J....43	54.01.0292	13-Pole	CIS Socket Strip	AMP
	J....44	54.01.0226	20-Pole	CIS Socket Strip	AMP
	MP....1	21.53.0354	3 pcs	Screw IS M3x6	
	MP....2	23.01.1032	3 pcs	Washer D 3.2/6x0.5	
	MP....3	24.46.1030	3 pcs	Washer D 3.2/5.5	
	MP....4	43.01.0.008	1 pce	ESD-Warning Label	
	MP....1	50.20.0305	4 pcs	Thermoplastic TO220	
	MP....2	50.20.0314	2 pcs	Thermoplastic TO126	
	MP....3	50.20.2002	2 pcs	Mounting clip TO126	
	MP....4	50.20.2003	4 pcs	Mounting clip TO220	
	MP....5	1.727.680.11	1 pce	AUDIO CONTROL PCB 4CH	ST
	MP....6	1.727.680.10	1 pce	Nr. Label	ST
	Q....1	50.03.0510	BD136-16	PNP	
	Q....2	50.03.0495	BD135-16	NPN	
	R....1	57.11.3332	3.3 kOhm	1% 0.25W, MF	
	R....2	57.11.3332	3.3 kOhm	1% 0.25W, MF	
	R....3	57.11.3332	3.3 kOhm	1% 0.25W, MF	
	R....4	57.11.3391	390 Ohm	1% 0.25W, MF	
	R....5	57.11.3510	51 Ohm	1% 0.25W, MF	
	R....6	57.11.3102	1 kOhm	1% 0.25W, MF	
	R....7	57.11.3102	1 kOhm	1% 0.25W, MF	
	R....8	57.11.3471	470 Ohm	1% 0.25W, MF	
	R....9	57.11.3332	3.3 kOhm	1% 0.25W, MF	

IND.	POS.NO.	PART NO.	VALUE	SPECIFICATIONS / EQUIVALENT	MANUF.
	R....10	57.11.3472	4.7 kOhm	1% 0.25W, MF	
	R....11	57.11.3561	560 Ohm	1% 0.25W, MF	
	R....12	57.11.3681	680 Ohm	1% 0.25W, MF	
	R....13	57.11.3332	3.3 kOhm	1% 0.25W, MF	
	R....14	57.11.3472	4.7 kOhm	1% 0.25W, MF	
	R....15	57.11.3332	3.3 kOhm	1% 0.25W, MF	
	R....16	57.11.3332	3.3 kOhm	1% 0.25W, MF	
	R....17	57.11.3332	3.3 kOhm	1% 0.25W, MF	
	R....18	57.11.3332	3.3 kOhm	1% 0.25W, MF	
	R....19	57.11.3332	3.3 kOhm	1% 0.25W, MF	
	R....20	57.11.3332	3.3 kOhm	1% 0.25W, MF	
	R....21	57.11.3332	3.3 kOhm	1% 0.25W, MF	
	R....22	57.11.3332	3.3 kOhm	1% 0.25W, MF	
	R....23	57.11.3332	3.3 kOhm	1% 0.25W, MF	
	R....24	57.11.3332	3.3 kOhm	1% 0.25W, MF	
	R....25	57.11.3332	3.3 kOhm	1% 0.25W, MF	
	R....26	57.11.3332	3.3 kOhm	1% 0.25W, MF	
	R....27	57.11.3242	2.4 kOhm	1% 0.25W, MF	
	R....28	57.11.3221	220 Ohm	1% 0.25W, MF	
	R....29	57.11.3511	510 Ohm	1% 0.25W, MF	
	R....30	57.11.3562	5.6 kOhm	1% 0.25W, MF	
	R....31	57.11.3103	10 kOhm	1% 0.25W, MF	
	R....32	57.11.3103	10 kOhm	1% 0.25W, MF	
	R....33	57.11.3103	10 kOhm	1% 0.25W, MF	
	R....34	57.11.3332	3.3 kOhm	1% 0.25W, MF	
	R....35	57.11.3242	2.4 kOhm	1% 0.25W, MF	
	R....36	57.11.3221	220 Ohm	1% 0.25W, MF	
	R....37	57.11.3511	510 Ohm	1% 0.25W, MF	
	R....38	57.11.3562	5.6 kOhm	1% 0.25W, MF	
	R....39	58.01.8202	2 kOhm	Potmeter PMG	
	R....40	58.01.8202	2 kOhm	Potmeter PMG	
	R....41	58.01.8202	2 kOhm	Potmeter PMG	
	R....42	57.11.3682	6.8 kOhm	1% 0.25W, MF	
	R....43	57.11.3103	10 kOhm	1% 0.25W, MF	
	R....44	57.11.3682	6.8 kOhm	1% 0.25W, MF	
	R....45	57.11.3332	3.3 kOhm	1% 0.25W, MF	
	R....46	57.11.3103	10 kOhm	1% 0.25W, MF	

AUDIO CONTROL BOARD (4CH) 1.727.681.81

IND.	POS.NO.	PART NO.	VALUE	SPECIFICATIONS / EQUIVALENT	MANUF.
	R....47	57.11.3682	6.8 kOhm	1%, 0.25W, MF	
	R....48	57.11.3103	10 kOhm	1%, 0.25W, MF	
	R....49	57.11.3682	6.8 kOhm	1%, 0.25W, MF	
	R....50	57.11.3682	6.8 kOhm	1%, 0.25W, MF	
	R....51	57.11.3103	10 kOhm	1%, 0.25W, MF	
	R....52	57.11.3682	6.8 kOhm	1%, 0.25W, MF	
	R....53	57.11.3682	6.8 kOhm	1%, 0.25W, MF	
	R....54	57.11.3103	10 kOhm	1%, 0.25W, MF	
	R....55	57.11.3221	220 Ohm	1%, 0.25W, MF	
	R....56	57.11.3103	10 kOhm	1%, 0.25W, MF	
	R....57	57.11.3221	220 Ohm	1%, 0.25W, MF	
	R....58	57.11.3103	10 kOhm	1%, 0.25W, MF	
	R....59	57.11.3103	10 kOhm	1%, 0.25W, MF	
	R....60	57.11.3221	220 Ohm	1%, 0.25W, MF	
	R....61	57.11.3102	1 kOhm	1%, 0.25W, MF	
	R....62	57.11.3223	22 kOhm	1%, 0.25W, MF	
	R....63	57.11.3472	4.7 kOhm	1%, 0.25W, MF	
	R....64	57.11.3103	10 kOhm	1%, 0.25W, MF	
	R....65	57.11.3223	22 kOhm	1%, 0.25W, MF	
	R....66	57.11.3102	1 kOhm	1%, 0.25W, MF	
	R....67	57.11.3473	47 kOhm	1%, 0.25W, MF	
	R....68	57.11.3473	47 kOhm	1%, 0.25W, MF	
	R....69	57.11.3332	3.3 kOhm	1%, 0.25W, MF	
	R....70	57.11.3332	3.3 kOhm	1%, 0.25W, MF	
	R....71	57.11.3332	3.3 kOhm	1%, 0.25W, MF	
	R....72	57.11.3332	3.3 kOhm	1%, 0.25W, MF	
	R....73	57.11.3332	3.3 kOhm	1%, 0.25W, MF	
	R....74	57.11.3103	10 kOhm	1%, 0.25W, MF	
	R....75	57.11.3332	3.3 kOhm	1%, 0.25W, MF	
	R....76	57.11.3682	6.8 kOhm	1%, 0.25W, MF	
	R....77	57.11.3103	10 kOhm	1%, 0.25W, MF	
	R....78	57.11.3682	6.8 kOhm	1%, 0.25W, MF	
	R....79	57.11.3103	10 kOhm	1%, 0.25W, MF	
	R....80	57.11.3103	10 kOhm	1%, 0.25W, MF	
	R....81	57.56.5680	68 Ohm	1%, 4 W DR	
	R....82	57.56.5680	68 Ohm	1%, 4 W DR	
	R....83	57.13.4229	2.2 Ohm	1%, 0.5 W, MF	

IND.	POS.NO.	PART NO.	VALUE	SPECIFICATIONS / EQUIVALENT	MANUF.
	R....84	57.13.4229	2.2 Ohm	1%, 0.5 W, MF	
	R....85	57.11.3102	1 kOhm	1%, 0.25W, MF	
	R....86	57.11.3470	47 Ohm	1%, 0.25W, MF	
	R....87	57.11.3102	1 kOhm	1%, 0.25W, MF	
	TP....1	54.02.0320		Plug 2.8*0.8	
	TP....2	54.02.0320		Plug 2.8*0.8	
	TP....3	54.02.0320		Plug 2.8*0.8	
	W.....1	57.11.3000		Wire Bridge	
	W.....2	57.11.3000		Wire Bridge	
	W.....3	57.11.3000		Wire Bridge	
	W.....4	57.11.3000		Wire Bridge	
	W.....5	57.11.3000		Wire Bridge	
	W.....6	57.11.3000		Wire Bridge	
	W.....7	57.11.3000		Wire Bridge	
	W.....8	57.11.3000		Wire Bridge	
	W.....9			not used	
	W....10	57.11.3000		Wire Bridge	
	W....11			not used	
	W....12	57.11.3000		Wire Bridge	
	W....13			not used	
	W....14	57.11.3000		Wire Bridge	
	W....15	57.11.3000		Wire Bridge	
	W....16	57.11.3000		Wire Bridge	
	W....17	57.11.3000		Wire Bridge	
	W....18	57.11.3000		Wire Bridge	
	XIC...1	53.03.0168		16-Pole IC Socket	
	XIC...2	53.03.0168		16-Pole IC Socket	
	XIC...3	53.03.0167		14-Pole IC Socket	
	XIC...4	53.03.0168		16-Pole IC Socket	
	XIC...5	53.03.0168		16-Pole IC Socket	
	XIC...6	53.03.0168		16-Pole IC Socket	
	XIC...7	53.03.0168		16-Pole IC Socket	
	XIC...8	53.03.0168		16-Pole IC Socket	
	XIC...9	53.03.0168		16-Pole IC Socket	

IND.	POS.NO.	PART NO.	VALUE	SPECIFICATIONS / EQUIVALENT	MANUF.
	XIC..10	53.03.0166		8-Pole IC Socket	
	XIC..11	53.03.0168		16-Pole IC Socket	
	XIC..12	53.03.0168		16-Pole IC Socket	
	XIC..13	53.03.0166		8-Pole IC Socket	
	XIC..14	53.03.0167		14-Pole IC Socket	
	XIC..15	53.03.0168		16-Pole IC Socket	
	XIC..16	53.03.0168		16-Pole IC Socket	
	XIC..17	53.03.0166		8-Pole IC Socket	
	XIC..18	53.03.0167		14-Pole IC Socket	
	XIC..19	53.03.0166		8-Pole IC Socket	

PP= Polypropylen, SI= Silicon , MF= Metal Film
PETP= Polyester, EL= Electrolytic

MANUFACTURER: MOT= MOTOROLA, RA= RAYTHEON, ST= STUDER
NS= NATIONAL SEMICONDUCTOR

ORIG 89/09/05

MONITOR INTERNAL (2CH) 1.727.120.00

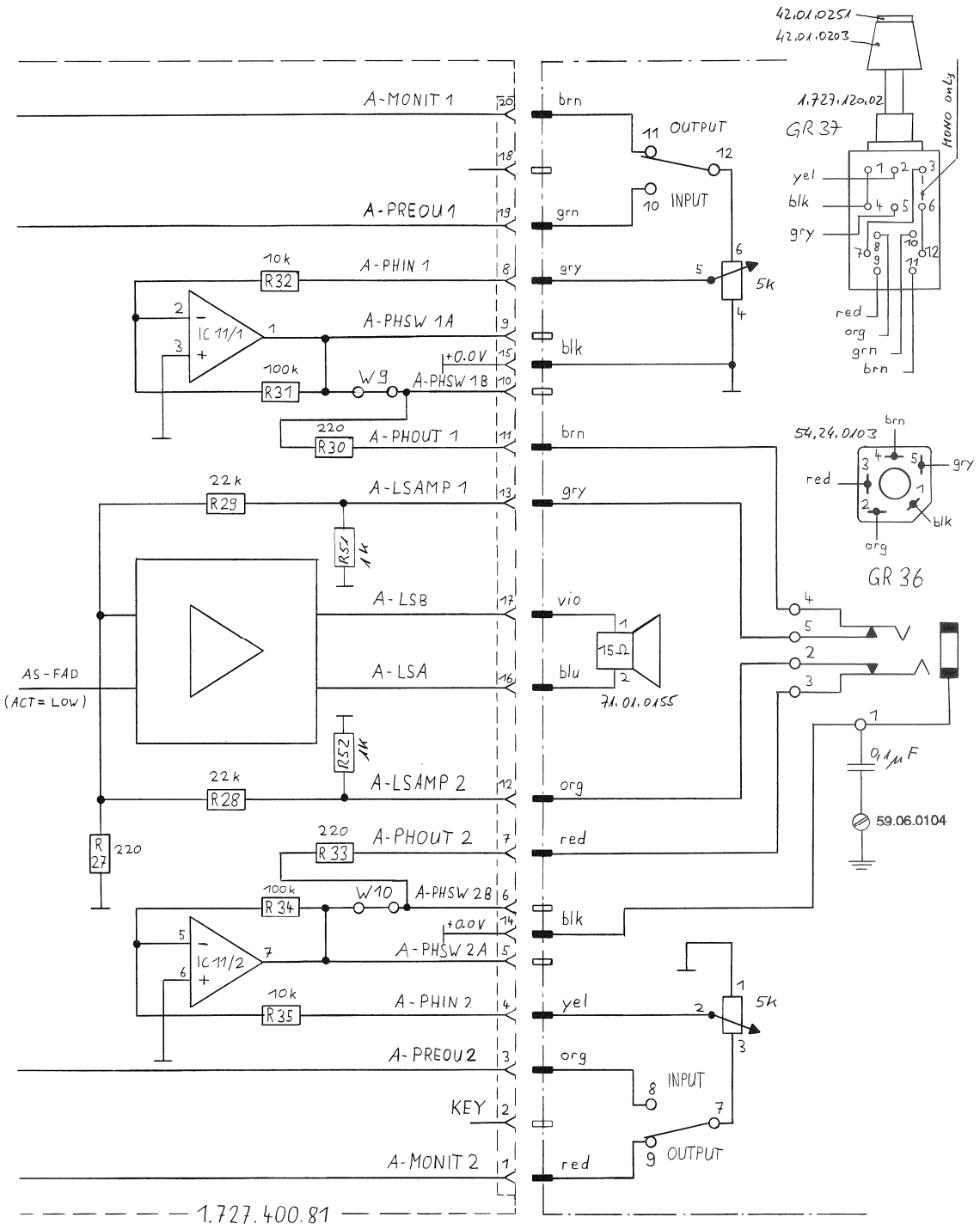

0 20.03.87 SD	07.11.90 Wth.	. .	. .	. .
	A 807 GR36, GR37			PAGE 1 OF 1
STUDER	MONITOR			1.727.120.00

MONITOR INTERNAL (2CH) 1.727.120.00

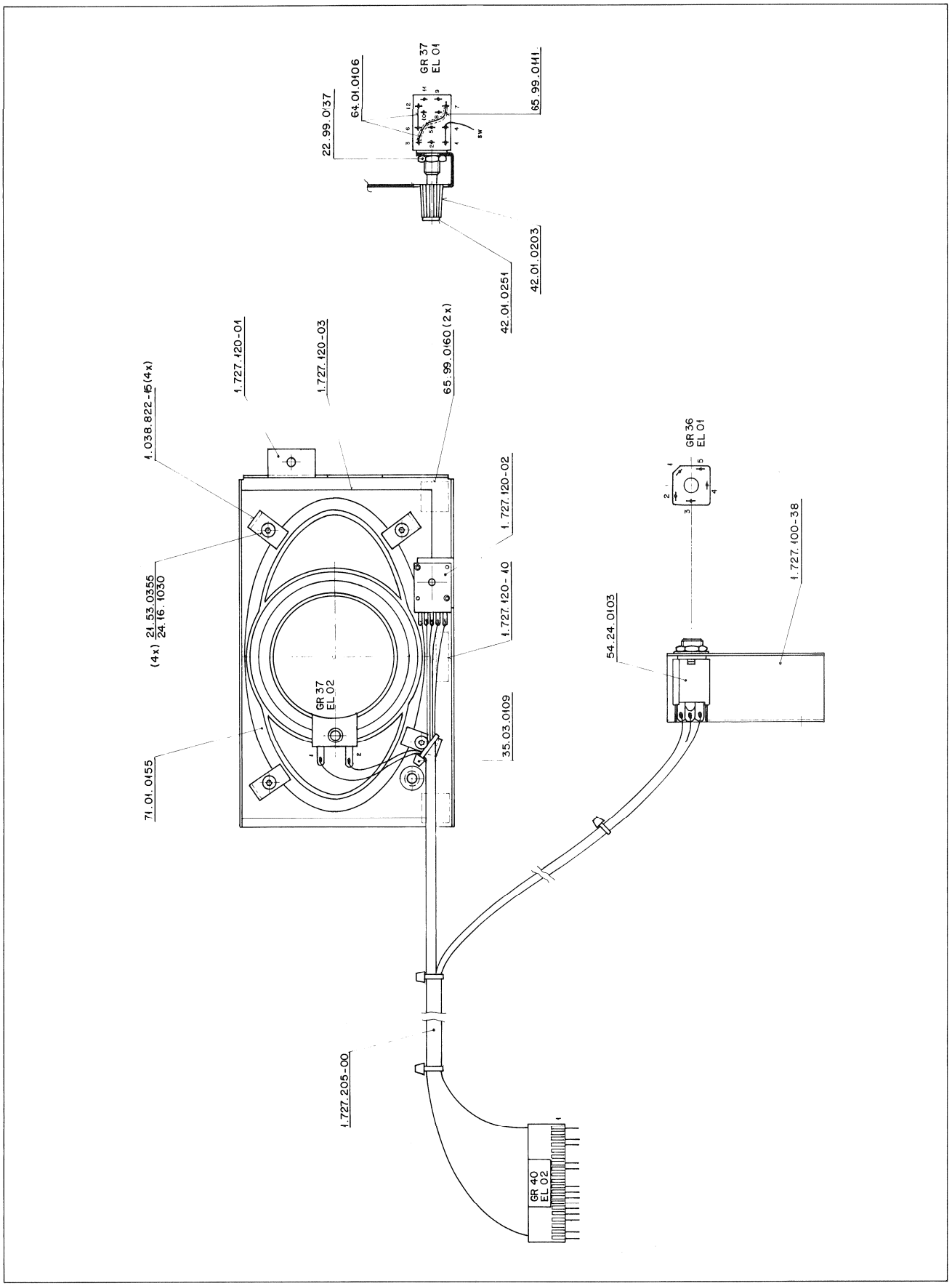

MONITOR INTERNAL (4CH) 1.727.641.00

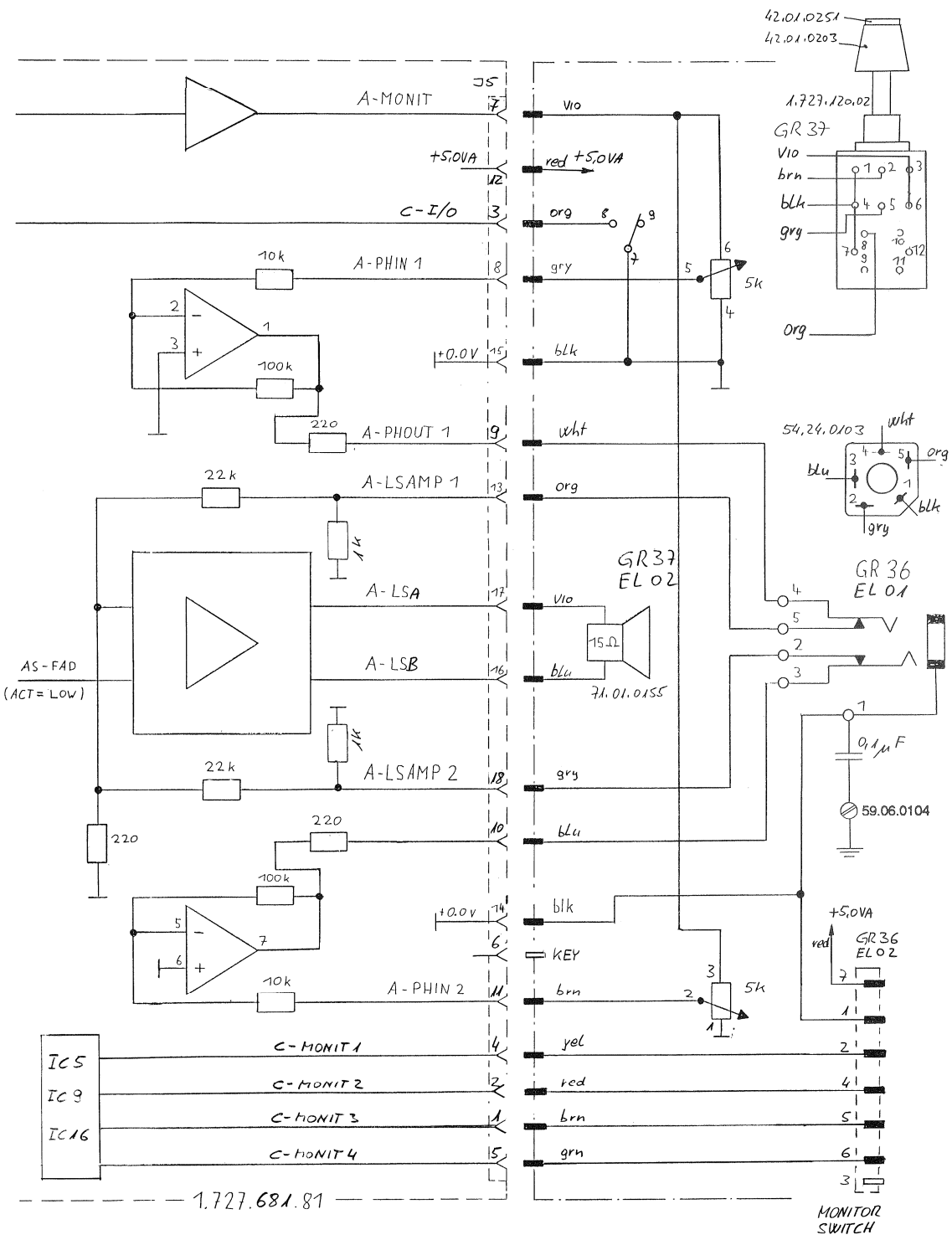

0 29.1.88 WAL				
	A 807 4CH GR36, GR37			PAGE 1 OF 1
STUDER	MONITOR			1.727.641.00

MONITOR INTERNAL (4CH) 1.727.641.00

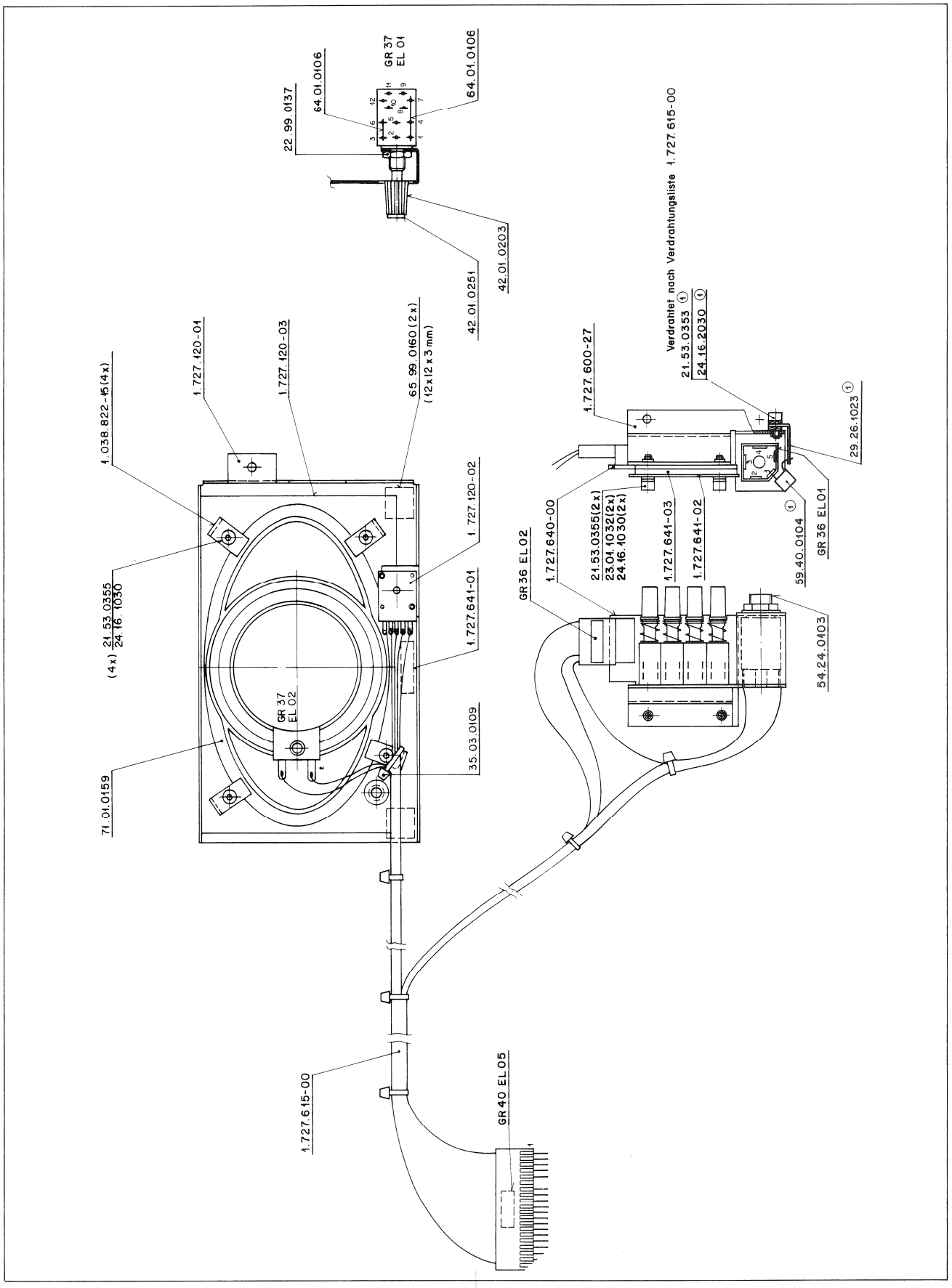

AUDIO ELECTRONICS BOARD 1.727.470.00
AUDIO ELECTRONICS BOARD HS 1.727.479.00

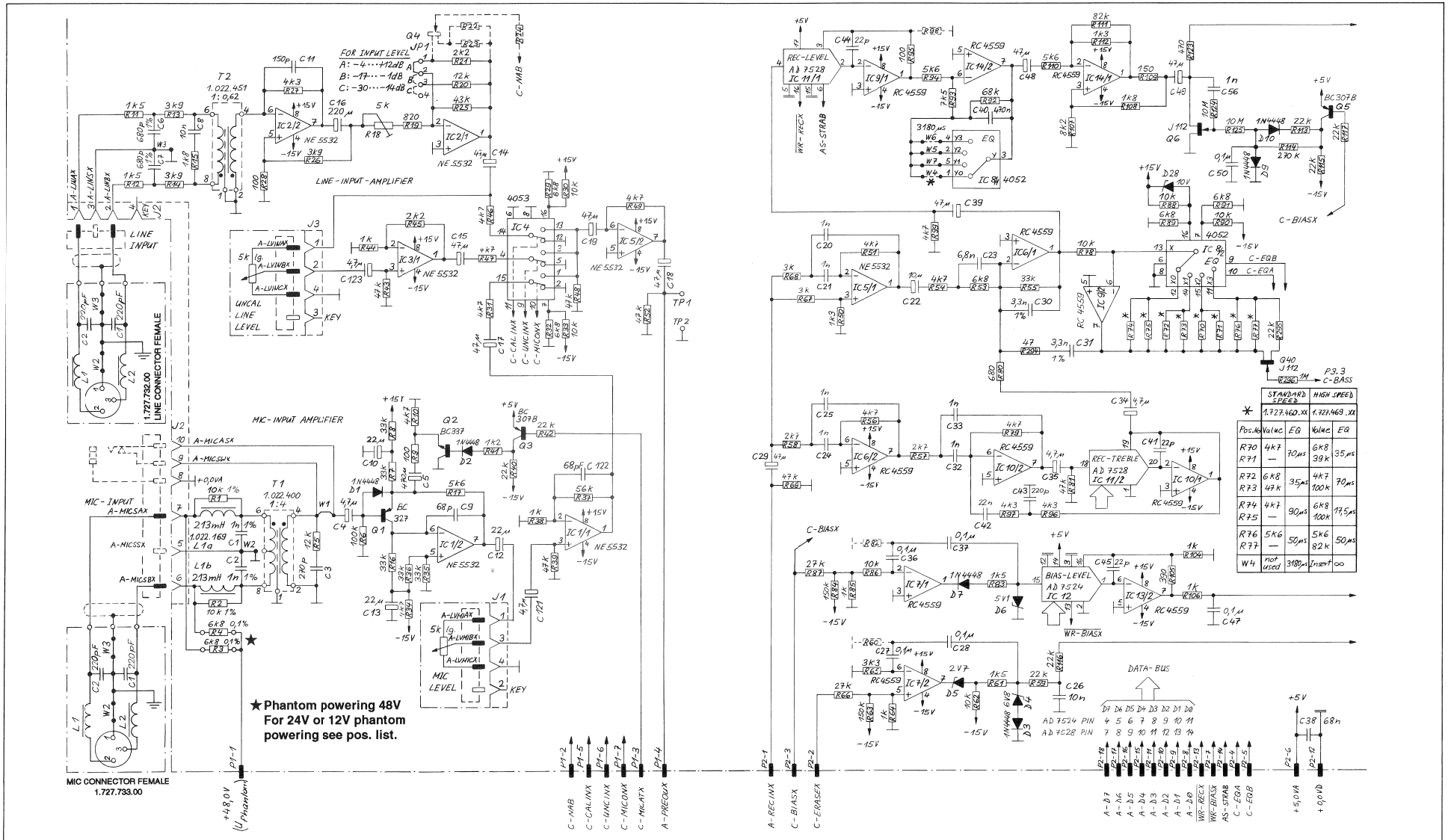

0 28.11.91 GP	1 29.3.94 GP	. .	. .
	A 807 GR 41/42		PAGE 1 OF 6
STUDER	AUDIO ELECTRONICS BOARD	SC	1.727.470.00
	AUDIO ELECTRONICS BOARD HS		1.727.479.00

0 28.11.91 GP	1 29.3.94 GP	. .	. .
	A 807 GR 41/42		PAGE 2 OF 6
STUDER	AUDIO ELECTRONICS BOARD	SC	1.727.470.00
	AUDIO ELECTRONICS BOARD HS		1.727.479.00

AUDIO ELECTRONICS BOARD 1.727.470.00
AUDIO ELECTRONICS BOARD HS 1.727.479.00

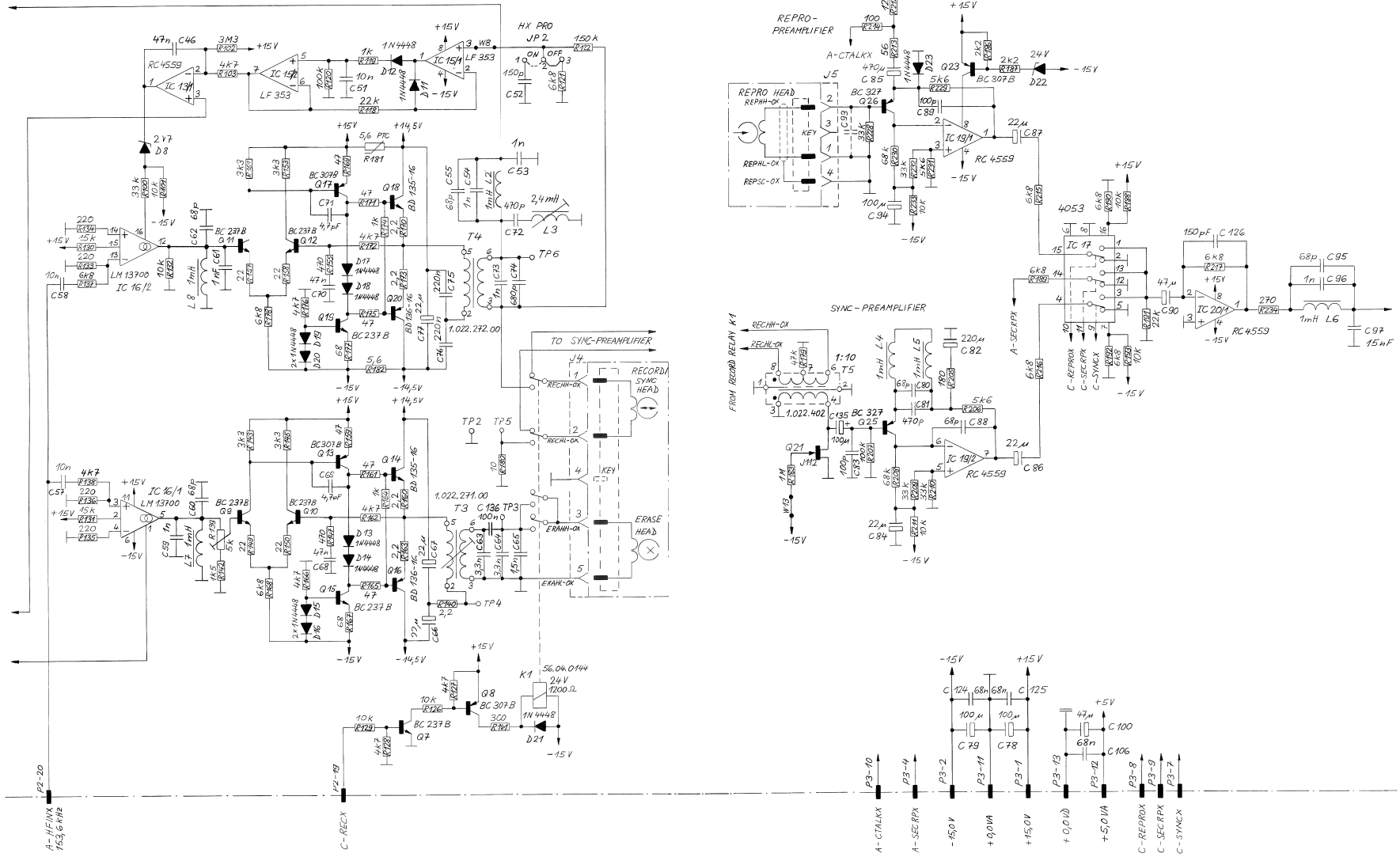

0 28.11.91 GP	1 29.3.94 GP	. .	. .
	A 807 GR 41/42		PAGE 3 OF 6
STUDER	AUDIO ELECTRONICS BOARD	SC	1.727.470.00
	AUDIO ELECTRONICS BOARD HS		1.727.479.00

0 28.11.91 GP	1 29.3.94 GP	. .	. .
	A 807 GR 41/42		PAGE 4 OF 6
STUDER	AUDIO ELECTRONICS BOARD	SC	1.727.470.00
	AUDIO ELECTRONICS BOARD HS		1.727.479.00

AUDIO ELECTRONICS BOARD 1.727.470.00
AUDIO ELECTRONICS BOARD HS 1.727.479.00

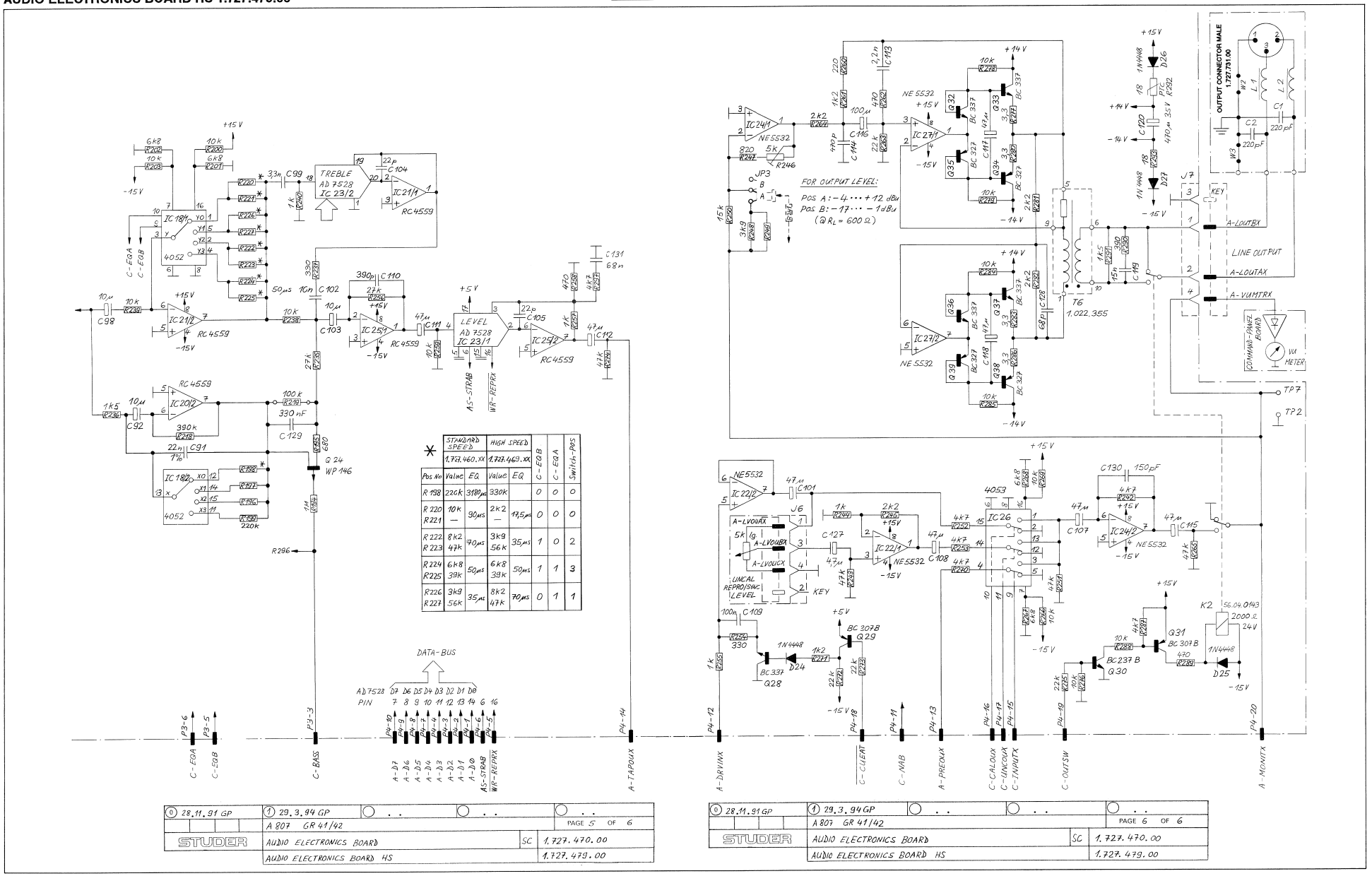

*	STANDARD SPEED 1.727.460.XX		HIGH SPEED 1.727.469.XX		C-EQB	C-EQA	Switch-POS
Pos No	Value	EQ	Value	EQ			
R 198	22k	318µs	330k		0	0	0
R 220 R 221	10k —	90µs	2k2 —	11,5µs	0	0	0
R 222 R 223	8k2 47k	70µs	3k9 56k	35µs	1	0	2
R 224 R 225	6k8 39k	50µs	6k8 39k	50µs	1	1	3
R 226 R 227	3k9 56k	35µs	8k2 47k	70µs	0	1	1

0 28.11.91 GP	1 29.3.94 GP	. .	. .	. .
	A 807 GR 41/42			PAGE 5 OF 6
STUDER	AUDIO ELECTRONICS BOARD	SC	1.727.470.00	
	AUDIO ELECTRONICS BOARD HS		1.727.479.00	

0 28.11.91 GP	1 29.3.94 GP	. .	. .	. .
	A 807 GR 41/42			PAGE 6 OF 6
STUDER	AUDIO ELECTRONICS BOARD	SC	1.727.470.00	
	AUDIO ELECTRONICS BOARD HS		1.727.479.00	

AUDIO ELECTRONICS BOARD 1.727.470.00
AUDIO ELECTRONICS BOARD HS 1.727.479.00

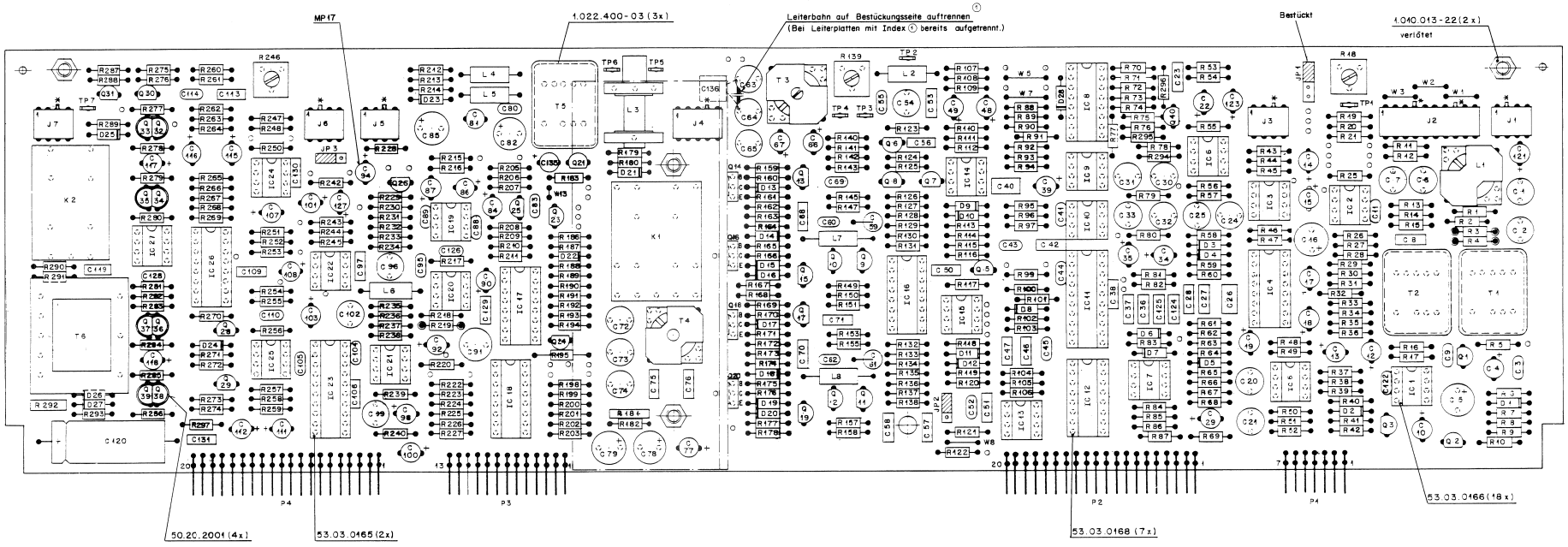

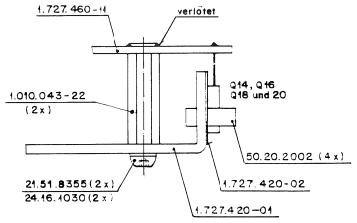

R3, R4, R219 auf Sockel 53.03.0228 (6x)

① C 136 neu dazu

* Codierung: Scheltdraht 64.01.0108 ⌀0,8x8mm
(muss 1mm vorstehen)

Nr. Etikette 1.727.460-10
Warnschild 45.01.0108

R18 INPUT LEVEL ADJUSTMENT
R139 ERASE VOLTAGE ADJUSTMENT
R246 OUTPUT LEVEL ADJUSTMENT
L3 BIAS TRAP
T3 ERASE HEAD CIRCUIT

JP1 INPUT LEVEL SENSITIVITY
JP2 HX PRO: A = ON, B = OFF
JP3 OUTPUT LEVEL SENSITIVITY

TP1 RECORD AMPLIFIER SIGNAL (0.775V = 0VU)
TP2 0.0V
TP3 VOLTAGE ON ERASE HEAD
TP4 PRIMARY CURRENT ON ERASE TRANSFORMER
TP5 BIAS CURRENT ON 10 Ω
TP6 REJECTOR FILTER ADJUSTMENT
TP7 VU METER SIGNAL (0.775V = 0VU)

Änderung					
	29.3.94				
Ausgabe	13.12.94				
	Datum	Gez.	Gepr.	Ges.	Index

Kopie für:

STUDER REGENSDORF ZÜRICH | Benennung: AUDIO-ELECTRONICS BOARD ESE | Nummer: 1.727.470-00

AUDIO ELECTRONICS BOARD 1.727.470.00

Ad	..POS..	...REF.No...	DESCRIPTION	MANUFACTURER
	C.....1	59.05.1102	1 nF 1% 50V PP	
	C.....2	59.05.1102	1 nF 1% 50V PP	
	C.....3	59.34.4271	270 pF 10% 50V Cer	
	C.....4	59.22.8479	4.7 uF -20% 35V EL	
	C.....5	59.22.2471	470 uF -20% 6.3V EL	
	C.....6	59.05.1681	680 pF 1% 50V PP	
	C.....7	59.05.1681	680 pF 1% 50V PP	
	C.....8	59.05.0103	10 nF 10% 50V PETP	
	C.....9	59.34.4680	68 pF 10% 50V Cer	
	C....10	59.22.5220	22 uF -20% 25V EL	
	C....11	59.34.4151	150 pF 10% 50V Cer	
	C....12	59.22.5220	22 uF -20% 25V EL	
	C....13	59.22.5220	22 uF -20% 25V EL	
	C....14	59.22.3470	47 uF -20% 10V EL	
	C....15	59.22.3470	47 uF -20% 10V EL	
	C....16	59.22.2221	220 uF -20% 6.3V EL	
	C....17	59.22.3470	47 uF -20% 10V EL	
	C....18	59.22.3470	47 uF -20% 10V EL	
	C....19	59.22.3470	47 uF -20% 10V EL	
	C....20	59.05.2102	1 nF 2.5% 50V PP	
	C....21	59.05.2102	1 nF 2.5% 50V PP	
	C....22	59.22.6100	10 uF -20% 35V EL	
	C....23	59.06.5682	6.8 nF 5% 50V PETP	
	C....24	59.05.2102	1 nF 2.5% 50V PP	
	C....25	59.05.2102	1 nF 2.5% 50V PP	
	C....26	59.06.0103	10 nF 10% 50V PETP	
	C....27	59.06.5104	100 nF 5% 50V PETP	
	C....28	59.06.5104	100 nF 5% 50V PETP	
	C....29	59.22.3470	47 uF -20% 10V EL	
	C....30	59.05.1332	3.3 nF 1% 50V PP	
	C....31	59.05.1332	3.3 nF 1% 50V PP	
	C....32	59.05.2102	1 nF 2.5% 50V PP	
	C....33	59.05.2102	1 nF 2.5% 50V PP	
	C....34	59.22.8479	4.7 uF -20% 35V EL	
	C....35	59.22.8479	4.7 uF -20% 35V EL	
	C....36	59.05.5104	100 nF 5% 50V PETP	
	C....37	59.05.5104	100 nF 5% 50V PETP	
	C....38	59.05.0683	68 nF 10% 50V PETP	
	C....39	59.22.3470	47 uF -20% 10V EL	
	C....40	59.05.5474	470 nF 5% 50V PETP	
	C....41	59.34.2220	22 pF 10% 50V Cer	
	C....42	59.05.0223	22 nF 10% 50V PETP	
	C....43	59.34.4221	220 pF 5% 50V Cer	
	C....44	59.34.2220	22 pF 10% 50V Cer	
	C....45	59.34.2220	22 pF 10% 50V Cer	
	C....46	59.05.0473	47 nF 10% 50V PETP	
	C....47	59.05.0104	100 nF 10% 50V PETP	
	C....48	59.22.3470	47 uF -20% 10V EL	
	C....49	59.22.3470	47 uF -20% 10V EL	
	C....50	59.05.0104	100 nF 10% 50V PETP	
	C....51	59.05.0103	10 nF 10% 50V PETP	
	C....52	59.34.4151	150 pF 5% 50V Cer	
	C....53	59.05.0102	1 nF 10% 50V PETP	
	C....54	59.05.2102	1 nF 2.5% 50V PP	
	C....55	59.34.4680	68 pF 10% 50V Cer	
	C....56	59.05.0102	1 nF 10% 50V PETP	
	C....57	59.05.0103	10 nF 10% 50V PETP	
	C....58	59.05.0103	10 nF 10% 50V PETP	
	C....59	59.12.9102	1nF 1% 50V PP	
	C....60	59.34.4680	68 pF 10% 50V Cer	
	C....61	59.12.9102	1nF 1% 50V PP	
	C....62	59.34.4680	68 pF 10% 50V Cer	
	C....63	59.05.2332	3.3 nF 2.5% 160V PP	
	C....64	59.05.2332	3.3 nF 2.5% 160V PP	
	C....65	59.05.2152	1.5 nF 2.5% 160V PP	
	C....66	59.22.6220	22 uF -20% 35V EL	
	C....67	59.22.6220	22 uF -20% 35V EL	
	C....68	59.05.0473	47 nF 10% 50V PETP	
	C....69	59.34.0479	4.7 pF 10% 50V Cer	
	C....70	59.05.0473	47 nF 10% 50V PETP	
	C....71	59.34.0479	4.7 pF 10% 50V Cer	
	C....72	59.05.2471	470 pF 2.5% 630V PP	
	C....73	59.05.1102	1 nF 1% 630V PP	
	C....74	59.05.1681	680 pF 1% 630V PP	
	C....75	59.05.0224	220 nF 10% 50V PETP	
	C....76	59.05.0224	220 nF 10% 50V PETP	
	C....77	59.22.6220	22 uF -20% 35V EL	
	C....78	59.22.5101	100 uF -20% 25V EL	
	C....79	59.22.5101	100 uF -20% 25V EL	
	C....80	59.34.4680	68 pF 10% 50V Cer	
	C....81	59.05.2471	470 pF 2.5% 50V PP	
	C....82	59.22.2221	220 uF -20% 6.3V EL	
	C....83	59.34.4101	100 pF 10% 50V Cer	
	C....84	59.22.5220	22 uF -20% 25V EL	
	C....85	59.22.2471	470 uF -20% 6.3V EL	
	C....86	59.22.5220	22 uF -20% 25V EL	
	C....87	59.22.5220	22 uF -20% 25V EL	
	C....88	59.34.4680	68 pF 10% 50V Cer	
	C....89	59.34.4101	100 pF 5% 50V Cer	
	C....90	59.22.3470	47 uF -20% 10V EL	
	C....91	59.05.1223	22 nF 1% 50V PP	
	C....92	59.25.2100	10 uF 20% 10V SAL	
	C....93	00.00.0000	not used	
	C....94	59.41.5101	100 uF -20% 25V EL, with Isolation 50.20.1003	
	C....95	59.34.4680	68 pF 10% 50V Cer	
	C....96	59.05.2102	1 nF 2.5% 50V PP	
	C....97	59.05.0153	15 nF 10% 50V PETP	
	C....98	59.22.6100	10 uF -20% 35V EL	
	C....99	59.05.2332	3.3 nF 2.5% 50V PP	
	C...100	59.22.3470	47 uF -20% 10V EL	
	C...101	59.22.3470	47 uF -20% 10V EL	
	C...102	59.05.2103	10 nF 2.5% 50V PP	
	C...103	59.22.6100	10 uF -20% 35V EL	
	C...104	59.34.2220	22 pF 10% 50V Cer	
	C...105	59.34.2220	22 pF 10% 50V Cer	
	C...106	59.06.0683	68 nF 10% 50V PETP	
	C...107	59.22.3470	47 uF -20% 10V EL	
	C...108	59.22.3470	47 uF -20% 10V EL	
	C...109	59.06.0104	100 nF 10% 50V PETP	
	C...110	59.34.5391	390 pF 10% 50V Cer	
	C...111	59.22.3470	47 uF -20% 10V EL	
	C...112	59.22.3470	47 uF -20% 10V EL	
	C...113	59.06.0222	2.2 nF 10% 50V PETP	
	C...114	59.34.5471	470 pF 10% 50V Cer	
	C...115	59.22.3470	47 uF -20% 10V EL	
	C...116	59.22.3101	100 uF -20% 10V EL	
	C...117	59.22.3470	47 uF -20% 10V EL	
	C...118	59.22.3470	47 uF -20% 10V EL	
	C...119	59.06.0153	15 nF 10% 50V PETP	
	C...120	59.25.5471	470 uF -20% 35V EL	
	C...121	59.22.8479	4.7 uF -20% 35V EL	
	C...122	59.34.4680	68 pF 10% 50V Cer	
	C...123	59.22.8479	4.7 uF -20% 35V EL	
	C...124	59.06.0683	68 nF 10% 50V PETP	
	C...125	59.06.0683	68 nF 10% 50V PETP	
	C...126	59.34.4151	150 pF 10% 50V Cer	
	C...127	59.22.8479	4.7 uF -20% 35V EL	
	C...128	59.34.4680	68 pF 10% 50V Cer	
	C...129	59.06.5334	330 nF 5% 50V PETP	
	C...130	59.34.4151	150 pF 10% 50V Cer	
	C...131	59.06.0683	68 nF 10% 50V PETP	
	C...135	59.22.3101	100 uF -20% 10V EL	
01	C...136	59.06.0104	100 nF 10% 50V PETP	
	D.....1	50.04.0125	1N4448 50V SI	
	D.....2	50.04.0125	1N4448 50V SI	
	D.....3	50.04.0125	1N4448 50V SI	
	D.....4	50.04.1102	6.8 V 5% 0.4W Zener	
	D.....5	50.04.1106	2.7 V 5% 0.4W Zener	
	D.....6	50.04.1112	5.1 V 5% 0.4W Zener	
	D.....7	50.04.0125	1N4448 50V SI	
	D.....8	50.04.1106	2.7 V 5% 0.4W Zener	
	D.....9	50.04.0125	1N4448 50V SI	
	D....10	50.04.0125	1N4448 50V SI	
	D....11	50.04.0125	1N4448 50V SI	
	D....12	50.04.0125	1N4448 50V SI	
	D....13	50.04.0125	1N4448 50V SI	
	D....14	50.04.0125	1N4448 50V SI	
	D....15	50.04.0125	1N4448 50V SI	
	D....16	50.04.0125	1N4448 50V SI	
	D....17	50.04.0125	1N4448 50V SI	
	D....18	50.04.0125	1N4448 50V SI	
	D....19	50.04.0125	1N4448 50V SI	
	D....20	50.04.0125	1N4448 50V SI	
	D....21	50.04.0125	1N4448 50V SI	
	D....22	50.04.1121	24 V 5% 0.4W Zener	
	D....23	50.04.0125	1N4448 50V SI	
	D....24	50.04.0125	1N4448 50V SI	
	D....25	50.04.0125	1N4448 50V SI	
	D....26	50.04.0125	1N4448 50V SI	
	D....27	50.04.0125	1N4448 50V SI	
	D....28	50.04.1114	10 V 5% 0.4W Zener	
	IC....1	50.09.0105	NE 5532 N Dual Op. Amp.	Sig
	IC....2	50.09.0105	NE 5532 N Dual Op. Amp.	Sig
	IC....3	50.09.0105	NE 5532 N Dual Op. Amp.	Sig
	IC....4	50.07.0015	MC 14053 CMOS Analog Switch	Mot
	IC....5	50.09.0105	NE 5532 N Dual Op. Amp.	Sig
	IC....6	50.09.0107	RC 4559 Dual Op. Amp.	Ra
	IC....7	50.09.0107	RC 4559 Dual Op. Amp.	Ra
	IC....8	50.07.0024	MC 14052 CMOS Analog Switch	Mot
	IC....9	50.09.0107	RC 4559 Dual Op. Amp.	Ra
	IC...10	50.09.0107	RC 4559 Dual Op. Amp.	Ra
	IC...11	50.07.0026	AD 7528JN Dual 8-bit D/A Converter	ADI
	IC...12	50.07.0002	AD 7524JN 8-bit D/A Converter	ADI
	IC...13	50.09.0107	RC 4559 Dual Op. Amp.	Ra
	IC...14	50.09.0107	RC 4559 Dual Op. Amp.	Ra
	IC...15	50.09.0101	LF 353 Dual Op. Amp.	NS
	IC...16	50.09.0112	LM 13700 Dual OTA	NS
	IC...17	50.07.0015	MC 14053 CMOS Analog Switch	Mot
	IC...18	50.07.0024	MC 14052 CMOS Analog Switch	Mot
	IC...19	50.09.0107	RC 4559 Dual Op. Amp.	Ra
	IC...20	50.09.0107	RC 4559 Dual Op. Amp.	Ra
	IC...21	50.09.0107	RC 4559 Dual Op. Amp.	Ra
	IC...22	50.09.0105	NE 5532 N Dual Op. Amp.	Sig
	IC...23	50.07.0026	AD 7528JN Dual 8-bit D/A Converter	ADI
	IC...24	50.09.0105	NE 5532 N Dual Op. Amp.	Sig
	IC...25	50.09.0107	RC 4559 Dual Op. Amp.	Ra
	IC...26	50.07.0015	MC 14053 CMOS Analog Switch	Mot
	IC...27	50.09.0105	NE 5532 N Dual Op. Amp.	Sig
	J.....1	54.01.0304	4-Pole CIS Socket Strip	AMP
	J.....2	54.01.0307	10-Pole CIS Socket Strip	AMP
	J.....3	54.01.0304	4-Pole CIS Socket Strip	AMP
	J.....4	54.01.0305	5-Pole CIS Socket Strip	AMP
	J.....5	54.01.0304	4-Pole CIS Socket Strip	AMP
	J.....6	54.01.0304	4-Pole CIS Socket Strip	AMP
	J.....7	54.01.0304	4-Pole CIS Socket Strip	AMP
	JP....1	54.01.0021	Bridge	
	JP....2	54.01.0021	Bridge	
	JP....3	54.01.0021	Bridge	
	K.....1	56.04.0144	4*U Relay, 24V, 1200 Ohm	
	K.....2	56.04.0143	2*U Relay, 24V, 2000 Ohm	
	L.....1	1.022.169.00	213mH	St
	L.....2	62.01.0128	1mH	
	L.....3	1.177.231.00	2.4mH	St
	L.....4	62.01.0128	1mH	
	L.....5	62.01.0128	1mH	
	L.....6	62.01.0128	1mH	
	L.....7	62.01.0128	1mH	
	L.....8	62.01.0128	1mH	
	MP....1	54.01.0020	4 pcs Contact Pin JP1	
	MP....2	54.01.0020	3 pcs Contact Pin JP2	
	MP....3	54.01.0020	3 pcs Contact Pin JP3	
	MP....4	1.010.043.22	2 pcs Rivet Nut M3*20	
	MP....5	21.51.8355	2 pcs Screw M3*8	
	MP....6	24.16.1030	2 pcs Washer	
	MP....7	50.20.2001	4 pcs Clip, 2*TO92	
	MP....8	1.727.420.01	1 pce Heatsink	St
	MP....9	1.727.420.02	1 pce Thermoplastic	St
	MP...10	1.727.470.10	1 pce No. Label	St
	MP...11	1.727.460.11	1 pce Audio Electronics PCB	St
	MP...12	1.022.400.03	3 pcs Isolation T1, T2, T5	St
	MP...13	1.010.013.22	2 pcs Rivet Nut M3*3	
	MP...14	50.20.2002	4 pcs Clip, TO126	
	MP...15	43.01.0108	1 pce ESE Warning Label	
	MP...16	53.03.0228	6 pcs 1-Pole Socket (R3,R4,R219)	
	MP...17	50.20.1003	1 pce Isolation for C94	
	P.....1	54.01.0223	7-Pole CIS Pin Strip	
	P.....2	54.01.0261	20-Pole CIS Pin Strip	
	P.....3	54.01.0273	13-Pole CIS Pin Strip	
	P.....4	54.01.0261	20-Pole CIS Pin Strip	
	Q.....1	50.03.0625	BC327 PNP	
	Q.....2	50.03.0340	BC337-25 NPN	
	Q.....3	50.03.0515	BC307 BC557B, BC560B PNP	
	Q.....4	00.00.0000	not used	
	Q.....5	50.03.0515	BC307 BC557B, BC560B PNP	
	Q.....6	50.03.0350	J112 FET	Mot
	Q.....7	50.03.0436	BC237 BC547B, BC550B NPN	
	Q.....8	50.03.0515	BC307 BC557B, BC560B PNP	
	Q.....9	50.03.0436	BC237 BC547B, BC550B NPN	
	Q....10	50.03.0436	BC237 BC547B, BC550B NPN	
	Q....11	50.03.0436	BC237 BC547B, BC550B NPN	
	Q....12	50.03.0436	BC237 BC547B, BC550B NPN	
	Q....13	50.03.0515	BC307 BC557B, BC560B PNP	
	Q....14	50.03.0495	BD135-16 NPN	
	Q....15	50.03.0436	BC237 BC547B, BC550B NPN	
	Q....16	50.03.0510	BD136-16 PNP	
	Q....17	50.03.0515	BC307 BC557B, BC560B PNP	
	Q....18	50.03.0495	BD135-16 NPN	
	Q....19	50.03.0436	BC237 BC547B, BC550B NPN	
	Q....20	50.03.0510	BD136-16 PNP	
	Q....21	50.03.0350	J112 FET	Mot
	Q....22	00.00.0000	not used	
	Q....23	50.03.0515	BC307 BC557B, BC560B PNP	
	Q....24	50.03.0329	WP146 FET	Mot
	Q....25	50.03.0625	BC327 PNP	
	Q....26	50.03.0625	BC327 PNP	
	Q....28	50.03.0340	BC337-25 NPN	
	Q....29	50.03.0515	BC307 BC557B, BC560B PNP	
	Q....30	50.03.0436	BC237 BC547B, BC550B NPN	
	Q....31	50.03.0515	BC307 BC557B, BC560B NPN	
	Q....32	50.03.0516	BC337 matched with Q33, NPN	
	Q....33	50.03.0516	BC337 matched with Q32, NPN	
	Q....34	50.03.0625	BC327 matched with Q35, PNP	
	Q....35	50.03.0625	BC327 matched with Q34, PNP	
	Q....36	50.03.0516	BC337 matched with Q37, NPN	
	Q....37	50.03.0516	BC337 matched with Q36, NPN	
	Q....38	50.03.0625	BC327 matched with Q39, PNP	
	Q....39	50.03.0625	BC327 matched with Q38, PNP	
	Q....40	50.03.0350	J112 FET	Mot
	R.....1	57.11.3103	10 kOhm 1%, 0.25W, MF	
	R.....2	57.11.3103	10 kOhm 1%, 0.25W, MF	
	R.....3	57.99.0250	6.8 kOhm 0.1%, 0.25W, MF, with socket, Note 1	
	R.....4	57.99.0250	6.8 kOhm 0.1%, 0.25W, MF, with socket, Note 1	
	R.....5	57.11.3123	12 kOhm 2%, 0.25W, MF	
	R.....6	57.11.3104	100 kOhm 2%, 0.25W, MF	
	R.....7	57.11.3333	33 kOhm 2%, 0.25W, MF	
	R.....8	57.11.3333	33 kOhm 2%, 0.25W, MF	
	R.....9	57.11.3101	100 Ohm 2%, 0.25W, MF	
	R....10	57.11.3472	4.7 kOhm 2%, 0.25W, MF	
	R....11	57.11.3152	1.5 kOhm 2%, 0.25W, MF	
	R....12	57.11.3152	1.5 kOhm 2%, 0.25W, MF	
	R....13	57.11.3392	3.9 kOhm 2%, 0.25W, MF	
	R....14	57.11.3392	3.9 kOhm 2%, 0.25W, MF	
	R....15	57.11.3182	1.8 kOhm 2%, 0.25W, MF	
	R....16	57.11.3333	33 kOhm 2%, 0.25W, MF	
	R....17	57.11.3562	5.6 kOhm 2%, 0.25W, MF	
	R....18	58.01.8502	5 kOhm 10%, 0.5 W, PMG	
	R....19	57.11.3821	820 Ohm 2%, 0.25W, MF	
	R....20	57.11.3123	12 kOhm 2%, 0.25W, MF	
	R....21	57.11.3222	2.2 kOhm 2%, 0.25W, MF	
	R....22	00.00.0000	not used	
	R....23	00.00.0000	not used	
	R....24	00.00.0000	not used	
	R....25	57.11.3433	43 kOhm 2%, 0.25W, MF	
	R....26	57.11.3392	3.9 kOhm 2%, 0.25W, MF	
	R....27	57.11.3432	4.3 kOhm 2%, 0.25W, MF	
	R....28	57.11.3101	100 Ohm 2%, 0.25W, MF	
	R....29	57.11.3682	6.8 kOhm 2%, 0.25W, MF	
	R....30	57.11.3103	10 kOhm 2%, 0.25W, MF	
	R....31	57.11.3472	4.7 kOhm 2%, 0.25W, MF	
	R....32	57.11.3682	6.8 kOhm 2%, 0.25W, MF	
	R....33	57.11.3103	10 kOhm 2%, 0.25W, MF	
	R....34	57.11.3472	4.7 kOhm 2%, 0.25W, MF	
	R....35	57.11.3333	33 kOhm 2%, 0.25W, MF	
	R....36	57.11.3333	33 kOhm 2%, 0.25W, MF	
	R....37	57.11.3563	56 kOhm 2%, 0.25W, MF	
	R....38	57.11.3102	1 kOhm 2%, 0.25W, MF	
	R....39	57.11.3473	47 kOhm 2%, 0.25W, MF	
	R....40	57.11.3223	22 kOhm 2%, 0.25W, MF	
	R....41	57.11.3122	1.2 kOhm 2%, 0.25W, MF	
	R....42	57.11.3223	22 kOhm 2%, 0.25W, MF	
	R....43	57.11.3473	47 kOhm 2%, 0.25W, MF	
	R....44	57.11.3102	1 kOhm 2%, 0.25W, MF	
	R....45	57.11.3222	2.2 kOhm 2%, 0.25W, MF	
	R....46	57.11.3472	4.7 kOhm 2%, 0.25W, MF	
	R....47	57.11.3472	4.7 kOhm 2%, 0.25W, MF	
	R....48	57.11.3473	47 kOhm 2%, 0.25W, MF	
	R....49	57.11.3472	4.7 kOhm 2%, 0.25W, MF	
	R....50	57.11.3132	1.3 kOhm 2%, 0.25W, MF	
	R....51	57.11.3472	4.7 kOhm 2%, 0.25W, MF	
	R....52	57.11.3473	47 kOhm 2%, 0.25W, MF	
	R....53	57.11.3682	6.8 kOhm 2%, 0.25W, MF	
	R....54	57.11.3472	4.7 kOhm 2%, 0.25W, MF	
	R....55	57.11.3333	33 kOhm 2%, 0.25W, MF	
	R....56	57.11.3472	4.7 kOhm 2%, 0.25W, MF	
	R....57	57.11.3272	2.7 kOhm 2%, 0.25W, MF	
	R....58	57.11.3272	2.7 kOhm 2%, 0.25W, MF	
	R....59	57.11.3223	22 kOhm 2%, 0.25W, MF	
	R....60	00.00.0000	not used	
	R....61	57.11.3152	1.5 kOhm 2%, 0.25W, MF	
	R....62	57.11.3103	10 kOhm 2%, 0.25W, MF	
	R....63	57.11.3154	150 kOhm 2%, 0.25W, MF	
	R....64	57.11.3102	1 kOhm 2%, 0.25W, MF	
	R....65	57.11.3332	3.3 kOhm 2%, 0.25W, MF	
	R....66	57.11.3273	27 kOhm 2%, 0.25W, MF	
	R....67	57.11.3302	3 kOhm 2%, 0.25W, MF	
	R....68	57.11.3302	3 kOhm 2%, 0.25W, MF	
	R....69	57.11.3473	47 kOhm 2%, 0.25W, MF	
	R....70	57.11.3472	4.7 kOhm 2%, 0.25W, MF	
	R....71	00.00.0000	not used	
	R....72	57.11.3682	6.8 kOhm 2%, 0.25W, MF	
	R....73	57.11.3473	47 kOhm 2%, 0.25W, MF	
	R....74	57.11.3472	4.7 kOhm 2%, 0.25W, MF	
	R....75	00.00.0000	not used	
	R....76	57.11.3562	5.6 kOhm 2%, 0.25W, MF	
	R....77	00.00.0000	not used	
	R....78	57.11.3103	10 kOhm 2%, 0.25W, MF	
	R....79	57.11.3472	4.7 kOhm 2%, 0.25W, MF	
	R....80	57.11.3681	680 Ohm 2%, 0.25W, MF	
	R....81	57.11.3473	47 kOhm 2%, 0.25W, MF	
	R....82	00.00.0000	not used	
	R....83	57.11.3152	1.5 kOhm 2%, 0.25W, MF	
	R....84	57.11.3154	150 kOhm 2%, 0.25W, MF	
	R....85	57.11.3102	1 kOhm 2%, 0.25W, MF	
	R....86	57.11.3103	10 kOhm 2%, 0.25W, MF	
	R....87	57.11.3273	27 kOhm 2%, 0.25W, MF	
	R....88	57.11.3103	10 kOhm 2%, 0.25W, MF	
	R....89	57.11.3682	6.8 kOhm 2%, 0.25W, MF	
	R....90	57.11.3103	10 kOhm 2%, 0.25W, MF	
	R....91	57.11.3682	6.8 kOhm 2%, 0.25W, MF	
	R....92	57.11.3683	68 kOhm 2%, 0.25W, MF	
	R....93	57.11.3752	7.5 kOhm 2%, 0.25W, MF	
	R....94	57.11.3562	5.6 kOhm 2%, 0.25W, MF	
	R....95	57.11.3101	100 Ohm 2%, 0.25W, MF	
	R....96	57.11.3432	4.3 kOhm 2%, 0.25W, MF	
	R....97	57.11.3432	4.3 kOhm 2%, 0.25W, MF	
	R....98	00.00.0000	not used	
	R....99	57.11.3472	4.7 kOhm 2%, 0.25W, MF	
	R...100	57.11.3333	33 kOhm 2%, 0.25W, MF	
	R...101	57.11.3103	10 kOhm 2%, 0.25W, MF	
	R...102	57.11.5335	3.3 MOhm 5%, 0.25W, MF	
	R...103	57.11.3472	4.7 kOhm 2%, 0.25W, MF	
	R...104	57.11.3102	1 kOhm 2%, 0.25W, MF	
	R...105	57.11.3391	390 Ohm 2%, 0.25W, MF	
	R...106	57.11.3102	1 kOhm 2%, 0.25W, MF	
	R...107	57.11.3822	8.2 kOhm 2%, 0.25W, MF	
	R...108	57.11.3182	1.8 kOhm 2%, 0.25W, MF	
	R...109	57.11.3151	150 Ohm 2%, 0.25W, MF	
	R...110	57.11.3562	5.6 kOhm 2%, 0.25W, MF	
	R...111	57.11.3823	82 kOhm 2%, 0.25W, MF	
	R...112	57.11.3132	1.3 kOhm 2%, 0.25W, MF	
	R...113	57.11.3223	22 kOhm 2%, 0.25W, MF	
	R...114	57.11.3274	270 kOhm 2%, 0.25W, MF	

AUDIO ELECTRONICS BOARD 1.727.470.00

Ad	..POS..	...REF.No...	DESCRIPTION	MANUFACTURER
	R...115	57.11.3223	22 kOhm 2%, 0.25W, MF	
	R...116	57.11.3223	22 kOhm 2%, 0.25W, MF	
	R...117	57.11.3223	22 kOhm 2%, 0.25W, MF	
	R...118	57.11.3223	22 kOhm 2%, 0.25W, MF	
	R...119	57.11.3102	1 kOhm 2%, 0.25W, MF	
	R...120	57.11.3104	100 kOhm 2%, 0.25W, MF	
	R...121	57.11.3682	6.8 kOhm 2%, 0.25W, MF	
	R...122	57.11.3154	150 kOhm 2%, 0.25W, MF	
	R...123	57.11.3471	470 Ohm 2%, 0.25W, MF	
	R...124	57.11.5106	10 MOhm 5%, 0.25W, MF	
	R...125	57.11.5106	10 MOhm 5%, 0.25W, MF	
	R...126	57.11.3103	10 kOhm 2%, 0.25W, MF	
	R...127	57.11.3472	4.7 kOhm 2%, 0.25W, MF	
	R...128	57.11.3472	4.7 kOhm 2%, 0.25W, MF	
	R...129	57.11.3103	10 kOhm 2%, 0.25W, MF	
	R...130	57.11.3153	15 kOhm 2%, 0.25W, MF	
	R...131	57.11.3153	15 kOhm 2%, 0.25W, MF	
	R...132	57.11.3103	10 kOhm 2%, 0.25W, MF	
	R...133	57.11.3221	220 Ohm 2%, 0.25W, MF	
	R...134	57.11.3221	220 Ohm 2%, 0.25W, MF	
	R...135	57.11.3221	220 Ohm 2%, 0.25W, MF	
	R...136	57.11.3221	220 Ohm 2%, 0.25W, MF	
	R...137	57.11.3682	6.8 kOhm 2%, 0.25W, MF	
	R...138	57.11.3472	4.7 kOhm 2%, 0.25W, MF	
	R...139	58.01.8502	5 kOhm 10%, 0.5 W, PMG	
	R...140	57.11.3229	2.2 Ohm 2%, 0.25W, MF	
	R...141	57.11.3301	300 Ohm 2%, 0.25W, MF	
	R...142	57.11.3152	1.5 kOhm 2%, 0.25W, MF	
	R...143	57.11.3332	3.3 kOhm 2%, 0.25W, MF	
	R...144	57.11.3332	3.3 kOhm 2%, 0.25W, MF	
	R...147	57.11.3471	470 Ohm 2%, 0.25W, MF	
	R...149	57.11.3220	22 Ohm 2%, 0.25W, MF	
	R...150	57.11.3220	22 Ohm 2%, 0.25W, MF	
	R...151	57.11.3332	3.3 kOhm 2%, 0.25W, MF	
	R...153	57.11.3332	3.3 kOhm 2%, 0.25W, MF	
	R...155	57.11.3471	470 Ohm 2%, 0.25W, MF	
	R...157	57.11.3220	22 Ohm 2%, 0.25W, MF	
	R...158	57.11.3220	22 Ohm 2%, 0.25W, MF	
	R...159	57.11.3470	47 Ohm 2%, 0.25W, MF	
	R...160	57.11.3229	2.2 Ohm 2%, 0.25W, MF	
	R...161	57.11.3470	47 Ohm 2%, 0.25W, MF	
	R...162	57.11.3472	4.7 kOhm 2%, 0.25W, MF	
	R...163	57.11.3229	2.2 Ohm 2%, 0.25W, MF	
	R...164	57.11.3102	1 kOhm 2%, 0.25W, MF	
	R...165	57.11.3470	47 Ohm 2%, 0.25W, MF	
	R...166	57.11.3472	4.7 kOhm 2%, 0.25W, MF	
	R...167	57.11.3680	68 Ohm 2%, 0.25W, MF	
	R...168	57.11.3682	6.8 kOhm 2%, 0.25W, MF	
	R...169	57.11.3470	47 Ohm 2%, 0.25W, MF	
	R...170	57.11.3229	2.2 Ohm 2%, 0.25W, MF	
	R...171	57.11.3470	47 Ohm 2%, 0.25W, MF	
	R...172	57.11.3472	4.7 kOhm 2%, 0.25W, MF	
	R...173	57.11.3229	2.2 Ohm 2%, 0.25W, MF	
	R...174	57.11.3102	1 kOhm 2%, 0.25W, MF	
	R...175	57.11.3470	47 Ohm 2%, 0.25W, MF	
	R...176	57.11.3472	4.7 kOhm 2%, 0.25W, MF	
	R...177	57.11.3680	68 Ohm 2%, 0.25W, MF	
	R...178	57.11.3682	6.8 kOhm 2%, 0.25W, MF	
	R...179	57.11.3473	47 kOhm 2%, 0.25W, MF	
	R...180	57.11.3100	10 Ohm 2%, 0.25W, MF	
	R...181	57.99.0209	5.6 Ohm PTC	
	R...182	57.11.3569	5.6 Ohm 2%, 0.25W, MF	
	R...183	57.11.3105	1 MOhm 2%, 0.25W, MF	
	R...184	00.00.0000	not used	
	R...185	00.00.0000	not used	
	R...186	57.11.3222	2.2 kOhm 2%, 0.25W, MF	
	R...187	57.11.3222	2.2 kOhm 2%, 0.25W, MF	
	R...188	57.11.3103	10 kOhm 2%, 0.25W, MF	
	R...189	57.11.3682	6.8 kOhm 2%, 0.25W, MF	
	R...190	57.11.3682	6.8 kOhm 2%, 0.25W, MF	
	R...191	57.11.3223	22 kOhm 2%, 0.25W, MF	
	R...192	57.11.3682	6.8 kOhm 2%, 0.25W, MF	
	R...193	57.11.3103	10 kOhm 2%, 0.25W, MF	
	R...194	57.11.3105	1 MOhm 2%, 0.25W, MF	
	R...195	57.11.3681	680 Ohm 2%, 0.25W, MF	
	R...196	00.00.0000	not used	
	R...197	00.00.0000	not used	
	R...198	57.11.3224	220 kOhm 2%, 0.25W, MF	
	R...199	57.11.3224	220 kOhm 2%, 0.25W, MF	
	R...200	57.11.3103	10 kOhm 2%, 0.25W, MF	
	R...201	57.11.3682	6.8 kOhm 2%, 0.25W, MF	
	R...202	57.11.3682	6.8 kOhm 2%, 0.25W, MF	
	R...203	57.11.3103	10 kOhm 2%, 0.25W, MF	
	R...204	00.00.0000	not used	
	R...205	57.11.3181	180 Ohm 2%, 0.25W, MF	
	R...206	57.11.3562	5.6 kOhm 2%, 0.25W, MF	
	R...207	57.11.3104	100 kOhm 2%, 0.25W, MF	
	R...208	57.11.3683	68 kOhm 2%, 0.25W, MF	
	R...209	57.11.3333	33 kOhm 2%, 0.25W, MF	
	R...210	57.11.3333	33 kOhm 2%, 0.25W, MF	
	R...211	57.11.3103	10 kOhm 2%, 0.25W, MF	
	R...212	57.11.3120	12 Ohm 2%, 0.25W, MF	
	R...213	57.11.3560	56 Ohm 2%, 0.25W, MF	
	R...214	57.11.3101	100 Ohm 2%, 0.25W, MF	
	R...215	57.11.3682	6.8 kOhm 2%, 0.25W, MF	
	R...216	57.11.3682	6.8 kOhm 2%, 0.25W, MF	
	R...217	57.11.3682	6.8 kOhm 2%, 0.25W, MF	
	R...218	57.11.3394	390 kOhm 5%, 0.25W, MF	
	R...219	57.11.3104	100 kOhm 2%, 0.25W, MF, with socket	
	R...220	57.11.3103	10 kOhm 2%, 0.25W, MF	
	R...221	00.00.0000	not used	
	R...222	57.11.3822	8.2 kOhm 2%, 0.25W, MF	
	R...223	57.11.3473	47 kOhm 2%, 0.25W, MF	
	R...224	57.11.3682	6.8 kOhm 2%, 0.25W, MF	
	R...225	57.11.3393	39 kOhm 2%, 0.25W, MF	
	R...226	57.11.3392	3.9 kOhm 2%, 0.25W, MF	
	R...227	57.11.3563	56 kOhm 2%, 0.25W, MF	
	R...228	57.11.3333	33 kOhm 2%, 0.25W, MF	
	R...229	57.11.3562	5.6 kOhm 2%, 0.25W, MF	
	R...230	57.11.3683	68 kOhm 2%, 0.25W, MF	
	R...231	57.11.3562	5.6 kOhm 2%, 0.25W, MF	
	R...232	57.11.3333	33 kOhm 2%, 0.25W, MF	
	R...233	57.11.3103	10 kOhm 2%, 0.25W, MF	
	R...234	57.11.3271	270 Ohm 2 % 0.25W, MF	
	R...235	57.11.3273	27 kOhm 2%, 0.25W, MF	
	R...236	57.11.3152	1.5 kOhm 2%, 0.25W, MF	
	R...237	57.11.3331	330 Ohm 2%, 0.25W, MF	
	R...238	57.11.3103	10 kOhm 2%, 0.25W, MF	
	R...239	57.11.3103	10 kOhm 2%, 0.25W, MF	
	R...240	57.11.3102	1 kOhm 2%, 0.25W, MF	
	R...241	00.00.0000	not used	
	R...242	57.11.3472	4.7 kOhm 2%, 0.25W, MF	
	R...243	57.11.3473	47 kOhm 2%, 0.25W, MF	
	R...244	57.11.3102	1 kOhm 2%, 0.25W, MF	
	R...245	57.11.3222	2.2 kOhm 2%, 0.25W, MF	
	R...246	58.01.8502	5 kOhm 10%, 0.5 W, PMG	
	R...247	57.11.3821	820 Ohm 2%, 0.25W, MF	
	R...248	57.11.3392	3.9 kOhm 2%, 0.25W, MF	
	R...249	00.00.0000	not used	
	R...250	57.11.3153	15 kOhm 2%, 0.25W, MF	
	R...251	57.11.3473	47 kOhm 2%, 0.25W, MF	
	R...252	57.11.3472	4.7 kOhm 2%, 0.25W, MF	
	R...253	57.11.3472	4.7 kOhm 2%, 0.25W, MF	
	R...254	57.11.3331	330 Ohm 2%, 0.25W, MF	
	R...255	57.11.3102	1 kOhm 2%, 0.25W, MF	
	R...256	57.11.3273	27 kOhm 2%, 0.25W, MF	
	R...257	57.11.3102	1 kOhm 2%, 0.25W, MF	
	R...258	57.11.3471	470 Ohm 2%, 0.25W, MF	
	R...259	57.11.3103	10 kOhm 2%, 0.25W, MF	
	R...260	57.11.3221	220 Ohm 2%, 0.25W, MF	
	R...261	57.11.3122	1.2 kOhm 2%, 0.25W, MF	
	R...262	57.11.3471	470 Ohm 2%, 0.25W, MF	
	R...263	57.11.3223	22 kOhm 2%, 0.25W, MF	
	R...264	57.11.3222	2.2 kOhm 2%, 0.25W, MF	
	R...265	57.11.3473	47 kOhm 2%, 0.25W, MF	
	R...266	57.11.3103	10 kOhm 2%, 0.25W, MF	
	R...267	57.11.3682	6.8 kOhm 2%, 0.25W, MF	
	R...268	57.11.3682	6.8 kOhm 2%, 0.25W, MF	
	R...269	57.11.3103	10 kOhm 2%, 0.25W, MF	
	R...270	57.11.3472	4.7 kOhm 2%, 0.25W, MF	
	R...271	57.11.3122	1.2 kOhm 2%, 0.25W, MF	
	R...272	57.11.3223	22 kOhm 2%, 0.25W, MF	
	R...273	57.11.3223	22 kOhm 2%, 0.25W, MF	
	R...274	57.11.3473	47 kOhm 2%, 0.25W, MF	
	R...275	57.11.3223	22 kOhm 2%, 0.25W, MF	
	R...276	57.11.3103	10 kOhm 2%, 0.25W, MF	
	R...277	57.11.3339	3.3 Ohm 2%, 0.25W, MF	
	R...278	57.11.3103	10 kOhm 2%, 0.25W, MF	
	R...279	57.11.3103	10 kOhm 2%, 0.25W, MF	
	R...280	57.11.3339	3.3 Ohm 2%, 0.25W, MF	
	R...281	57.11.3222	2.2 kOhm 2%, 0.25W, MF	
	R...282	57.11.3222	2.2 kOhm 2%, 0.25W, MF	
	R...283	57.11.3339	3.3 Ohm 2%, 0.25W, MF	
	R...284	57.11.3103	10 kOhm 2%, 0.25W, MF	
	R...285	57.11.3103	10 kOhm 2%, 0.25W, MF	
	R...286	57.11.3339	3.3 Ohm 2%, 0.25W, MF	
	R...287	57.11.3472	4.7 kOhm 2%, 0.25W, MF	
	R...288	57.11.3103	10 kOhm 2%, 0.25W, MF	
	R...289	57.11.3471	470 Ohm 2%, 0.25W, MF	
	R...290	57.11.3391	390 Ohm 2%, 0.25W, MF	
	R...291	57.11.3152	1.5 kOhm 2%, 0.25W, MF	
	R...292	57.92.1151	18 Ohm 150mA, PTC	
	R...293	57.11.3180	18 Ohm 2%, 0.25W, MF	
	R...294	57.11.3470	47 Ohm 2%, 0.25W, MF	
	R...295	57.11.3223	22 kOhm 2%, 0.25W, MF	
	R...296	57.11.3105	1 MOhm 2%, 0.25W, MF	
	R...297	57.11.3472	4.7 kOhm 2%, 0.25W, MF	
	T.....1	1.022.400.00	1:4 Mic Input Trafo	St
	T.....2	1.022.451.00	1:0.62 Line Input Trafo	St
	T.....3	1.022.271.00	Erase Trafo	St
	T.....4	1.022.272.00	Bias Trafo	St
	T.....5	1.022.402.00	1:10 Sync Trafo	St
	T.....6	1.022.355.00	Line Output Trafo	St
	TP....1	54.02.0320	Plug 2.8*0.8	ANP
	TP....2	54.02.0320	Plug 2.8*0.8	ANP
	TP....3	54.02.0320	Plug 2.8*0.8	ANP
	TP....4	54.02.0320	Plug 2.8*0.8	ANP
	TP....5	54.02.0320	Plug 2.8*0.8	ANP
	TP....6	54.02.0320	Plug 2.8*0.8	ANP
	TP....7	54.02.0320	Plug 2.8*0.8	ANP
	W.....1	64.01.0106	Wire Bridge	
	V.....2	64.01.0106	Wire Bridge	
	V.....3	64.01.0106	Wire Bridge	
	V.....4	00.00.0000	not used	
	V.....5	64.01.0106	Wire Bridge	
	V.....6	00.00.0000	not used	
	V.....7	64.01.0106	Wire Bridge	
	V.....8	64.01.0106	Wire Bridge	
	V....13	1.010.329.64	Wire Bridge	
	IC...1	53.03.0166	8-Pole IC Socket	
	IC...2	53.03.0166	8-Pole IC Socket	
	IC...3	53.03.0166	8-Pole IC Socket	
	IC...4	53.03.0168	16-Pole IC Socket	
	IC...5	53.03.0166	8-Pole IC Socket	
	IC...6	53.03.0166	8-Pole IC Socket	
	IC...7	53.03.0166	8-Pole IC Socket	
	IC...8	53.03.0168	16-Pole IC Socket	
	IC...9	53.03.0166	8-Pole IC Socket	
	IC..10	53.03.0166	8-Pole IC Socket	
	IC..11	53.03.0165	20-Pole IC Socket	
	IC..12	53.03.0168	16-Pole IC Socket	
	IC..13	53.03.0166	8-Pole IC Socket	
	IC..14	53.03.0166	8-Pole IC Socket	
	IC..15	53.03.0166	8-Pole IC Socket	
	IC..16	53.03.0168	16-Pole IC Socket	
	IC..17	53.03.0168	16-Pole IC Socket	
	IC..18	53.03.0168	16-Pole IC Socket	
	IC..19	53.03.0166	8-Pole IC Socket	
	IC..20	53.03.0166	8-Pole IC Socket	
	IC..21	53.03.0166	8-Pole IC Socket	
	IC..22	53.03.0166	8-Pole IC Socket	
	IC..23	53.03.0165	20-Pole IC Socket	
	IC..24	53.03.0166	8-Pole IC Socket	
	IC..25	53.03.0166	8-Pole IC Socket	
	IC..26	53.03.0168	16-Pole IC Socket	
	IC..27	53.03.0166	8-Pole IC Socket	

Note 1 Variable Phantom Supply

U (V)	POS.NO.	PART NO.	VALUE
48	R 3 / R 4	57990250	6.8 kOhm 0.1 % 0.25 W MF
24	R 3 / R 4		4.3 kOhm 0.1 % 0.25 W MF
12	R 3 / R 4	57990199	680 Ohm 0.1 % 0.25 W MF

Cer = Ceramic EL = Electrolytic PETP = Polyester
PP = Polypropylen MF = Metal film SI = Silicon
SAL = Solid Aluminium
MANUFACTURER: ADI = Analog Devices Inc. Mot = Motorola
NS = National Semiconductors Ra = Raytheon
Sig = Signetics St = Studer

1.727.470.00 AUDIO ELECTRONICS BOARD GP 91/11/2800

1.727.470.00 AUDIO ELECTRONICS BOARD GP 94/03/2901

AUDIO ELECTRONICS BOARD HS 1.727.479.00

Ad	..POS..	...REF.No...	DESCRIPTION	MANUFACTURER
	C....1	59.05.1102	1 nF 1% 50V PP	
	C....2	59.05.1102	1 nF 1% 50V PP	
	C....3	59.34.4271	270 pF 10% 50V Cer	
	C....4	59.22.8479	4.7 uF -20% 35V EL	
	C....5	59.22.2471	470 uF -20% 6.3V EL	
	C....6	59.05.1681	680 pF 1% 50V PP	
	C....7	59.05.1681	680 pF 1% 50V PP	
	C....8	59.06.0103	10 nF 10% 50V PETP	
	C....9	59.34.4680	68 pF 10% 50V Cer	
	C....10	59.22.5220	22 uF -20% 25V EL	
	C....11	59.34.4151	150 pF 10% 50V Cer	
	C....12	59.22.5220	22 uF -20% 25V EL	
	C....13	59.22.5220	22 uF -20% 25V EL	
	C....14	59.22.3470	47 uF -20% 10V EL	
	C....15	59.22.3470	47 uF -20% 10V EL	
	C....16	59.22.2221	220 uF -20% 6.3V EL	
	C....17	59.22.3470	47 uF -20% 10V EL	
	C....18	59.22.3470	47 uF -20% 10V EL	
	C....19	59.22.3470	47 uF -20% 10V EL	
	C....20	59.05.2102	1 nF 2.5% 50V PP	
	C....21	59.05.2102	1 nF 2.5% 50V PP	
	C....22	59.22.6100	10 uF -20% 35V EL	
	C....23	59.06.5682	6.8 nF 5% 50V PETP	
	C....24	59.05.2102	1 nF 2.5% 50V PP	
	C....25	59.05.2102	1 nF 2.5% 50V PP	
	C....26	59.06.0103	10 nF 10% 50V PETP	
	C....27	59.06.5104	100 nF 5% 50V PETP	
	C....28	59.06.5104	100 nF 5% 50V PETP	
	C....29	59.22.3470	47 uF -20% 10V EL	
	C....30	59.05.1332	3.3 nF 1% 50V PP	
	C....31	59.05.1332	3.3 nF 1% 50V PP	
	C....32	59.05.2102	1 nF 2.5% 50V PP	
	C....33	59.05.2102	1 nF 2.5% 50V PP	
	C....34	59.22.8479	4.7 uF -20% 35V EL	
	C....35	59.22.8479	4.7 uF -20% 35V EL	
	C....36	59.06.5104	100 nF 5% 50V PETP	
	C....37	59.06.5104	100 nF 5% 50V PETP	
	C....38	59.06.0683	68 nF 10% 50V PETP	
	C....39	59.22.3470	47 uF -20% 10V EL	
	C....40	59.06.5474	470 nF 5% 50V PETP	
	C....41	59.34.2220	22 pF 10% 50V Cer	
	C....42	59.06.0223	22 nF 10% 50V PETP	
	C....43	59.34.4221	220 pF 5% 50V Cer	
	C....44	59.34.2220	22 pF 10% 50V Cer	
	C....45	59.34.2220	22 pF 10% 50V Cer	
	C....46	59.06.0473	47 nF 10% 50V PETP	
	C....47	59.06.0104	100 nF 10% 50V PETP	
	C....48	59.22.3470	47 uF -20% 10V EL	
	C....49	59.22.3470	47 uF -20% 10V EL	
	C....50	59.06.0104	100 nF 10% 50V PETP	
	C....51	59.06.0103	10 nF 10% 50V PETP	
	C....52	59.34.4151	150 pF 5% 50V Cer	
	C....53	59.06.0102	1 nF 10% 50V PETP	
	C....54	59.05.2102	1 nF 2.5% 50V PP	
	C....55	59.34.4680	68 pF 10% 50V Cer	
	C....56	59.06.0102	1 nF 10% 50V PETP	
	C....57	59.06.0103	10 nF 10% 50V PETP	
	C....58	59.06.0103	10 nF 10% 50V PETP	
	C....59	59.12.9102	1nF 1% 50V PP	
	C....60	59.34.4680	68 pF 5% 50V Cer	
	C....61	59.12.9102	1nF 1% 50V PP	
	C....62	59.34.4680	68 pF 5% 50V Cer	
	C....63	59.05.2332	3.3 nF 2.5% 160V PP	
	C....64	59.05.2332	3.3 nF 2.5% 160V PP	
	C....65	59.05.2152	1.5 nF 2.5% 160V PP	
	C....66	59.22.6220	22 uF -20% 35V EL	
	C....67	59.22.6220	22 uF -20% 35V EL	
	C....68	59.06.0473	47 nF 10% 50V PETP	
	C....69	59.34.0479	4.7 pF 10% 50V Cer	
	C....70	59.06.0473	47 nF 10% 50V PETP	
	C....71	59.34.0479	4.7 pF 10% 50V Cer	
	C....72	59.05.2471	470 pF 2.5% 630V PP	
	C....73	59.05.1102	1 nF 1% 630V PP	
	C....74	59.05.1681	680 pF 1% 630V PP	
	C....75	59.06.0224	220 nF 10% 50V PETP	
	C....76	59.06.0224	220 nF 10% 50V PETP	
	C....77	59.22.6220	22 uF -20% 35V EL	
	C....78	59.22.5101	100 uF -20% 25V EL	
	C....79	59.22.5101	100 uF -20% 25V EL	
	C....80	59.34.4680	68 pF 10% 50V Cer	
	C....81	59.05.2471	470 pF 2.5% 50V PP	
	C....82	59.22.2221	220 uF -20% 6.3V EL	
	C....83	59.34.4101	100 pF 10% 50V Cer	
	C....84	59.22.5220	22 uF -20% 25V EL	
	C....85	59.22.2471	470 uF -20% 6.3V EL	
	C....86	59.22.5220	22 uF -20% 25V EL	
	C....87	59.22.5220	22 uF -20% 25V EL	
	C....88	59.34.4680	68 pF 10% 50V Cer	
	C....89	59.34.4101	100 pF 5% 50V Cer	
	C....90	59.22.3470	47 uF -20% 10V EL	
	C....91	59.05.1223	22 nF 1% 50V PP	
	C....92	59.26.2100	10 uF 20% 10V SAL	
	C....93	00.00.0000	not used	
	C....94	59.41.5101	100 uF -20% 25V EL, with Isolation 50.20.1003	
	C....95	59.34.4680	68 pF 10% 50V Cer	
	C....96	59.05.2102	1 nF 2.5% 50V PP	
	C....97	59.06.0153	15 nF 10% 50V PETP	
	C....98	59.22.6100	10 uF -20% 35V EL	
	C....99	59.05.2332	3.3 nF 2.5% 50V PP	
	C...100	59.22.3470	47 uF -20% 10V EL	
	C...101	59.22.3470	47 uF -20% 10V EL	
	C...102	59.05.2103	10 nF 2.5% 50V PP	
	C...103	59.22.6100	10 uF -20% 35V EL	
	C...104	59.34.2220	22 pF 10% 50V Cer	
	C...105	59.34.2220	22 pF 10% 50V Cer	
	C...106	59.06.0683	68 nF 10% 50V PETP	
	C...107	59.22.3470	47 uF -20% 10V EL	
	C...108	59.22.3470	47 uF -20% 10V EL	
	C...109	59.06.0104	100 nF 10% 50V PETP	
	C...110	59.34.5391	390 pF 10% 50V Cer	
	C...111	59.22.3470	47 uF -20% 10V EL	
	C...112	59.22.3470	47 uF -20% 10V EL	
	C...113	59.06.0222	2.2 nF 10% 50V PETP	
	C...114	59.34.5471	470 pF 10% 50V Cer	
	C...115	59.22.3470	47 uF -20% 10V EL	
	C...116	59.22.3101	100 uF -20% 10V EL	
	C...117	59.22.3470	47 uF -20% 10V EL	
	C...118	59.22.3470	47 uF -20% 10V EL	
	C...119	59.06.0153	15 nF 10% 50V PETP	
	C...120	59.25.5471	470 uF -20% 35V EL	
	C...121	59.22.8479	4.7 uF -20% 35V EL	
	C...122	59.34.4680	68 pF 10% 50V Cer	
	C...123	59.22.8479	4.7 uF -20% 35V EL	
	C...124	59.06.0683	68 nF 10% 50V PETP	
	C...125	59.06.0683	68 nF 10% 50V PETP	
	C...126	59.34.4151	150 pF 10% 50V Cer	
	C...127	59.22.8479	4.7 uF -20% 35V EL	
	C...128	59.34.4680	68 pF 10% 50V Cer	
	C...129	59.06.5334	330 nF 5% 50V PETP	
	C...130	59.34.4151	150 pF 10% 50V Cer	
	C...131	59.06.0683	68 nF 10% 50V PETP	
	C...135	59.22.3101	100 uF -20% 10V EL	
01	C...136	59.06.0104	100 nF 10% 50V PETP	
	D.....1	50.04.0125	1N4448 50V SI	
	D.....2	50.04.0125	1N4448 50V SI	
	D.....3	50.04.0125	1N4448 50V SI	
	D.....4	50.04.1102	6.8 V 5% 0.4W Zener	
	D.....5	50.04.1106	2.7 V 5%, 0.4W Zener	
	D.....6	50.04.1112	5.1 V 5%, 0.4W Zener	
	D.....7	50.04.0125	1N4448 50V SI	
	D.....8	50.04.1106	2.7 V 5%, 0.4W Zener	
	D.....9	50.04.0125	1N4448 50V SI	
	D....10	50.04.0125	1N4448 50V SI	
	D....11	50.04.0125	1N4448 50V SI	
	D....12	50.04.0125	1N4448 50V SI	
	D....13	50.04.0125	1N4448 50V SI	
	D....14	50.04.0125	1N4448 50V SI	
	D....15	50.04.0125	1N4448 50V SI	
	D....16	50.04.0125	1N4448 50V SI	
	D....17	50.04.0125	1N4448 50V SI	
	D....18	50.04.0125	1N4448 50V SI	
	D....19	50.04.0125	1N4448 50V SI	
	D....20	50.04.0125	1N4448 50V SI	
	D....21	50.04.0125	1N4448 50V SI	
	D....22	50.04.1121	24 V 5% 0.4W Zener	
	D....23	50.04.0125	1N4448 50V SI	
	D....24	50.04.0125	1N4448 50V SI	
	D....25	50.04.0125	1N4448 50V SI	
	D....26	50.04.0125	1N4448 50V SI	
	D....27	50.04.0125	1N4448 50V SI	
	D....28	50.04.1114	10 V 5% 0.4W Zener	
	IC....1	50.09.0105	NE 5532 N Dual Op. Amp.	Sig
	IC....2	50.09.0105	NE 5532 N Dual Op. Amp.	Sig
	IC....3	50.09.0105	NE 5532 N Dual Op. Amp.	Sig
	IC....4	50.07.0015	MC 14053 CMOS Analog Switch	Mot
	IC....5	50.09.0105	NE 5532 N Dual Op. Amp.	Sig
	IC....6	50.09.0107	RC 4559 Dual Op. Amp.	Ra
	IC....7	50.09.0107	RC 4559 Dual Op. Amp.	Ra
	IC....8	50.07.0024	MC 14052 CMOS Analog Switch	Mot
	IC....9	50.09.0107	RC 4559 Dual Op. Amp.	Ra
	IC...10	50.09.0107	RC 4559 Dual Op. Amp.	Ra
	IC...11	50.07.0026	AD 7528JN Dual 8-bit D/A Converter	ADI
	IC...12	50.07.0002	AD 7524JN 8-bit D/A Converter	ADI
	IC...13	50.09.0107	RC 4559 Dual Op. Amp.	Ra
	IC...14	50.09.0107	RC 4559 Dual Op. Amp.	Ra
	IC...15	50.09.0101	LF 353 Dual Op. Amp.	NS
	IC...16	50.09.0112	LM 13700 Dual OTA	NS
	IC...17	50.07.0015	MC 14053 CMOS Analog Switch	Mot
	IC...18	50.07.0024	MC 14052 CMOS Analog Switch	Mot
	IC...19	50.09.0107	RC 4559 Dual Op. Amp.	Ra
	IC...20	50.09.0107	RC 4559 Dual Op. Amp.	Ra
	IC...21	50.09.0107	RC 4559 Dual Op. Amp.	Ra
	IC...22	50.09.0105	NE 5532 N Dual Op. Amp.	Sig
	IC...23	50.07.0026	AD 7528JN Dual 8-bit D/A Converter	ADI
	IC...24	50.09.0105	NE 5532 N Dual Op. Amp.	Sig
	IC...25	50.09.0107	RC 4559 Dual Op. Amp.	Ra
	IC...26	50.07.0015	MC 14053 CMOS Analog Switch	Mot
	IC...27	50.09.0105	NE 5532 N Dual Op. Amp.	Sig
	J.....1	54.01.0304	4-Pole CIS Socket Strip	AMP
	J.....2	54.01.0307	10-Pole CIS Socket Strip	AMP
	J.....3	54.01.0304	4-Pole CIS Socket Strip	AMP
	J.....4	54.01.0305	5-Pole CIS Socket Strip	AMP
	J.....5	54.01.0304	4-Pole CIS Socket Strip	AMP
	J.....6	54.01.0304	4-Pole CIS Socket Strip	AMP
	J.....7	54.01.0304	4-Pole CIS Socket Strip	AMP
	JP....1	54.01.0021	Bridge	
	JP....2	54.01.0021	Bridge	
	JP....3	54.01.0021	Bridge	
	K.....1	56.04.0144	4*U Relay, 24V, 1200 Ohm	
	K.....2	56.04.0143	2*U Relay, 24V, 2000 Ohm	
	L.....1	1.022.169.00	213mH	St
	L.....2	62.01.0128	1mH	
	L.....3	1.177.231.00	2.4mH	St
	L.....4	62.01.0128	1mH	
	L.....5	62.01.0128	1mH	
	L.....6	62.01.0128	1mH	
	L.....7	62.01.0128	1mH	
	L.....8	62.01.0128	1mH	
	MP....1	54.01.0020	4 pcs Contact Pin JP1	
	MP....2	54.01.0020	3 pcs Contact Pin JP2	
	MP....3	54.01.0020	3 pcs Contact Pin JP3	
	MP....4	1.010.043.22	2 pcs Rivet Nut M3*20	
	MP....5	21.51.8355	2 pcs Screw M3*8	
	MP....6	24.16.1030	2 pcs Washer	
	MP....7	50.20.2001	4 pcs Clip, 2*TO92	
	MP....8	1.727.420.01	1 pce Heatsink	St
	MP....9	1.727.420.02	1 pce Thermoplastic	St
	MP...10	1.727.479.10	1 pce No. Label	St
	MP...11	1.727.460.11	1 pce Audio Electronics PCB	St
	MP...12	1.022.400.03	3 pcs Isolation T1, T2, T5	St
	MP...13	1.010.013.22	2 pcs Rivet Nut M3*3	
	MP...14	50.20.2002	4 pcs Clip, TO126	
	MP...15	43.01.0108	1 pce ESE Warning Label	
	MP...16	53.03.0228	6 pcs 1-Pole Socket (R3,R4,R219)	
	MP...17	50.20.1003	1 pce Isolation for C94	
	P.....1	54.01.0223	7-Pole CIS Pin Strip	
	P.....2	54.01.0261	20-Pole CIS Pin Strip	
	P.....3	54.01.0273	13-Pole CIS Pin Strip	
	P.....4	54.01.0261	20-Pole CIS Pin Strip	
	Q.....1	50.03.0625	BC327 PNP	
	Q.....2	50.03.0340	BC337-25 NPN	
	Q.....3	50.03.0515	BC307 BC557B, BC560B PNP	
	Q.....4	00.00.0000	not used	
	Q.....5	50.03.0515	BC307B BC557B, BC560B PNP	
	Q.....6	50.03.0350	J112 FET	Mot
	Q.....7	50.03.0436	BC237B BC547B, BC550B NPN	
	Q.....8	50.03.0515	BC307B BC557B, BC560B PNP	
	Q.....9	50.03.0436	BC237B BC547B, BC550B NPN	
	Q....10	50.03.0436	BC237B BC547B, BC550B NPN	
	Q....11	50.03.0436	BC237B BC547B, BC550B NPN	
	Q....12	50.03.0436	BC237B BC547B, BC550B NPN	
	Q....13	50.03.0515	BC307B BC557B, BC560B PNP	
	Q....14	50.03.0495	BD135-16 NPN	
	Q....15	50.03.0436	BC237B BC547B, BC550B NPN	
	Q....16	50.03.0510	BD136-16 PNP	
	Q....17	50.03.0515	BC307B BC557B, BC560B PNP	
	Q....18	50.03.0495	BD135-16 NPN	
	Q....19	50.03.0436	BC237B BC547B, BC550B NPN	
	Q....20	50.03.0510	BD136-16 PNP	
	Q....21	50.03.0350	J112 FET	Mot
	Q....22	00.00.0000	not used	
	Q....23	50.03.0515	BC307B BC557B, BC560B PNP	
	Q....24	50.03.0329	WP146 FET	Mot
	Q....25	50.03.0625	BC327 PNP	
	Q....26	50.03.0625	BC327 PNP	
	Q....28	50.03.0340	BC337-25 NPN	
	Q....29	50.03.0515	BC307B BC557B, BC560B PNP	
	Q....30	50.03.0436	BC237B BC547B, BC550B NPN	
	Q....31	50.03.0515	BC307B BC557B, BC560B PNP	
	Q....32	50.03.0516	BC337 matched with Q33, NPN	
	Q....33	50.03.0516	BC337 matched with Q32, NPN	
	Q....34	50.03.0625	BC327 matched with Q35, PNP	
	Q....35	50.03.0625	BC327 matched with Q34, PNP	
	Q....36	50.03.0516	BC337 matched with Q37, NPN	
	Q....37	50.03.0516	BC337 matched with Q36, NPN	
	Q....38	50.03.0625	BC327 matched with Q39, PNP	
	Q....39	50.03.0625	BC327 matched with Q38, PNP	
	Q....40	50.03.0350	J112 FET	Mot
	R.....1	57.11.3103	10 kOhm 1%, 0.25W, MF	
	R.....2	57.11.3103	10 kOhm 1%, 0.25W, MF	
	R.....3	57.99.0250	6.8 kOhm 0.1%, 0.25W, MF, with socket, Note 1	
	R.....4	57.99.0250	6.8 kOhm 0.1%, 0.25W, MF, with socket, Note 1	
	R.....5	57.11.3123	12 kOhm 2%, 0.25W, MF	
	R.....6	57.11.3104	100 kOhm 2%, 0.25W, MF	
	R.....7	57.11.3333	33 kOhm 2%, 0.25W, MF	
	R.....8	57.11.3333	33 kOhm 2%, 0.25W, MF	
	R.....9	57.11.3101	100 Ohm 2%, 0.25W, MF	
	R....10	57.11.3472	4.7 kOhm 2%, 0.25W, MF	
	R....11	57.11.3152	1.5 kOhm 2%, 0.25W, MF	
	R....12	57.11.3152	1.5 kOhm 2%, 0.25W, MF	
	R....13	57.11.3392	3.9 kOhm 2%, 0.25W, MF	
	R....14	57.11.3392	3.9 kOhm 2%, 0.25W, MF	
	R....15	57.11.3182	1.8 kOhm 2%, 0.25W, MF	
	R....16	57.11.3333	33 kOhm 2%, 0.25W, MF	
	R....17	57.11.3562	5.6 kOhm 2%, 0.25W, MF	
	R....18	58.01.8502	5 kOhm 10%, 0.5 W, PMG	
	R....19	57.11.3821	820 Ohm 2%, 0.25W, MF	
	R....20	57.11.3123	12 kOhm 2%, 0.25W, MF	
	R....21	57.11.3222	2.2 kOhm 2%, 0.25W, MF	
	R....22	00.00.0000	not used	
	R....23	00.00.0000	not used	
	R....24	00.00.0000	not used	
	R....25	57.11.3433	43 kOhm 2%, 0.25W, MF	
	R....26	57.11.3392	3.9 kOhm 2%, 0.25W, MF	
	R....27	57.11.3432	4.3 kOhm 2%, 0.25W, MF	
	R....28	57.11.3101	100 Ohm 2%, 0.25W, MF	
	R....29	57.11.3682	6.8 kOhm 2%, 0.25W, MF	
	R....30	57.11.3103	10 kOhm 2%, 0.25W, MF	
	R....31	57.11.3472	4.7 kOhm 2%, 0.25W, MF	
	R....32	57.11.3682	6.8 kOhm 2%, 0.25W, MF	
	R....33	57.11.3103	10 kOhm 2%, 0.25W, MF	
	R....34	57.11.3472	4.7 kOhm 2%, 0.25W, MF	
	R....35	57.11.3333	33 kOhm 2%, 0.25W, MF	
	R....36	57.11.3333	33 kOhm 2%, 0.25W, MF	
	R....37	57.11.3563	56 kOhm 2%, 0.25W, MF	
	R....38	57.11.3102	1 kOhm 2%, 0.25W, MF	
	R....39	57.11.3473	47 kOhm 2%, 0.25W, MF	
	R....40	57.11.3223	22 kOhm 2%, 0.25W, MF	
	R....41	57.11.3122	1.2 kOhm 2%, 0.25W, MF	
	R....42	57.11.3223	22 kOhm 2%, 0.25W, MF	
	R....43	57.11.3473	47 kOhm 2%, 0.25W, MF	
	R....44	57.11.3102	1 kOhm 2%, 0.25W, MF	
	R....45	57.11.3222	2.2 kOhm 2%, 0.25W, MF	
	R....46	57.11.3472	4.7 kOhm 2%, 0.25W, MF	
	R....47	57.11.3472	4.7 kOhm 2%, 0.25W, MF	
	R....48	57.11.3473	47 kOhm 2%, 0.25W, MF	
	R....49	57.11.3472	4.7 kOhm 2%, 0.25W, MF	
	R....50	57.11.3132	1.3 kOhm 2%, 0.25W, MF	
	R....51	57.11.3472	4.7 kOhm 2%, 0.25W, MF	
	R....52	57.11.3473	47 kOhm 2%, 0.25W, MF	
	R....53	57.11.3682	6.8 kOhm 2%, 0.25W, MF	
	R....54	57.11.3472	4.7 kOhm 2%, 0.25W, MF	
	R....55	57.11.3333	33 kOhm 2%, 0.25W, MF	
	R....56	57.11.3472	4.7 kOhm 2%, 0.25W, MF	
	R....57	57.11.3272	2.7 kOhm 2%, 0.25W, MF	
	R....58	57.11.3272	2.7 kOhm 2%, 0.25W, MF	
	R....59	57.11.3223	22 kOhm 2%, 0.25W, MF	
	R....60	00.00.0000	not used	
	R....61	57.11.3152	1.5 kOhm 2%, 0.25W, MF	
	R....62	57.11.3103	10 kOhm 2%, 0.25W, MF	
	R....63	57.11.3154	150 kOhm 2%, 0.25W, MF	
	R....64	57.11.3102	1 kOhm 2%, 0.25W, MF	
	R....65	57.11.3332	3.3 kOhm 2%, 0.25W, MF	
	R....66	57.11.3273	27 kOhm 2%, 0.25W, MF	
	R....67	57.11.3302	3 kOhm 2%, 0.25W, MF	
	R....68	57.11.3302	3 kOhm 2%, 0.25W, MF	
	R....69	57.11.3473	47 kOhm 2%, 0.25W, MF	
	R....70	57.11.3682	6.8 kOhm 2%, 0.25W, MF	
	R....71	57.11.3393	39 kOhm 2%, 0.25W, MF	
	R....72	57.11.3472	4.7 kOhm 2%, 0.25W, MF	
	R....73	57.11.3104	100 kOhm 2%, 0.25W, MF	
	R....74	57.11.3682	6.8 kOhm 2%, 0.25W, MF	
	R....75	57.11.3104	100 kOhm 2%, 0.25W, MF	
	R....76	57.11.3562	5.6 kOhm 2%, 0.25W, MF	
	R....77	57.11.3823	82 kOhm 2%, 0.25W, MF	
	R....78	57.11.3103	10 kOhm 2%, 0.25W, MF	
	R....79	57.11.3472	4.7 kOhm 2%, 0.25W, MF	
	R....80	57.11.3681	680 Ohm 2%, 0.25W, MF	
	R....81	57.11.3473	47 kOhm 2%, 0.25W, MF	
	R....82	00.00.0000	not used	
	R....83	57.11.3152	1.5 kOhm 2%, 0.25W, MF	
	R....84	57.11.3154	150 kOhm 2%, 0.25W, MF	
	R....85	57.11.3102	1 kOhm 2%, 0.25W, MF	
	R....86	57.11.3103	10 kOhm 2%, 0.25W, MF	
	R....87	57.11.3273	27 kOhm 2%, 0.25W, MF	
	R....88	57.11.3103	10 kOhm 2%, 0.25W, MF	
	R....89	57.11.3682	6.8 kOhm 2%, 0.25W, MF	
	R....90	57.11.3103	10 kOhm 2%, 0.25W, MF	
	R....91	57.11.3682	6.8 kOhm 2%, 0.25W, MF	
	R....92	57.11.3683	68 kOhm 2%, 0.25W, MF	
	R....93	57.11.3752	7.5 kOhm 2%, 0.25W, MF	
	R....94	57.11.3562	5.6 kOhm 2%, 0.25W, MF	
	R....95	57.11.3101	100 Ohm 2%, 0.25W, MF	
	R....96	57.11.3432	4.3 kOhm 2%, 0.25W, MF	
	R....97	57.11.3432	4.3 kOhm 2%, 0.25W, MF	
	R....98	00.00.0000	not used	
	R....99	57.11.3472	4.7 kOhm 2%, 0.25W, MF	
	R...100	57.11.3333	33 kOhm 2%, 0.25W, MF	
	R...101	57.11.3103	10 kOhm 2%, 0.25W, MF	
	R...102	57.11.5335	3.3 MOhm 5%, 0.25W, MF	
	R...103	57.11.3472	4.7 kOhm 2%, 0.25W, MF	
	R...104	57.11.3102	1 kOhm 2%, 0.25W, MF	
	R...105	57.11.3391	390 Ohm 2%, 0.25W, MF	
	R...106	57.11.3102	1 kOhm 2%, 0.25W, MF	
	R...107	57.11.3822	8.2 kOhm 2%, 0.25W, MF	
	R...108	57.11.3182	1.8 kOhm 2%, 0.25W, MF	
	R...109	57.11.3151	150 Ohm 2%, 0.25W, MF	
	R...110	57.11.3562	5.6 kOhm 2%, 0.25W, MF	
	R...111	57.11.3823	82 kOhm 2%, 0.25W, MF	
	R...112	57.11.3132	1.3 kOhm 2%, 0.25W, MF	
	R...113	57.11.3223	22 kOhm 2%, 0.25W, MF	
	R...114	57.11.3274	270 kOhm 2%, 0.25W, MF	

AUDIO ELECTRONICS BOARD HS 1.727.479.00

Ad	..POS..	...REF.No...	DESCRIPTION	MANUFACTURER
	R...115	57.11.3223	22 kOhm 2%, 0.25W, MF	
	R...116	57.11.3223	22 kOhm 2%, 0.25W, MF	
	R...117	57.11.3223	22 kOhm 2%, 0.25W, MF	
	R...118	57.11.3223	22 kOhm 2%, 0.25W, MF	
	R...119	57.11.3102	1 kOhm 2%, 0.25W, MF	
	R...120	57.11.3104	100 kOhm 2%, 0.25W, MF	
	R...121	57.11.3682	6.8 kOhm 2%, 0.25W, MF	
	R...122	57.11.3154	150 kOhm 2%, 0.25W, MF	
	R...123	57.11.3471	470 Ohm 2%, 0.25W, MF	
	R...124	57.11.5106	10 MOhm 5%, 0.25W, MF	
	R...125	57.11.5106	10 MOhm 5%, 0.25W, MF	
	R...126	57.11.3103	10 kOhm 2%, 0.25W, MF	
	R...127	57.11.3472	4.7 kOhm 2%, 0.25W, MF	
	R...128	57.11.3472	4.7 kOhm 2%, 0.25W, MF	
	R...129	57.11.3103	10 kOhm 2%, 0.25W, MF	
	R...130	57.11.3153	15 kOhm 2%, 0.25W, MF	
	R...131	57.11.3153	15 kOhm 2%, 0.25W, MF	
	R...132	57.11.3103	10 kOhm 2%, 0.25W, MF	
	R...133	57.11.3221	220 Ohm 2%, 0.25W, MF	
	R...134	57.11.3221	220 Ohm 2%, 0.25W, MF	
	R...135	57.11.3221	220 Ohm 2%, 0.25W, MF	
	R...136	57.11.3221	220 Ohm 2%, 0.25W, MF	
	R...137	57.11.3682	6.8 kOhm 2%, 0.25W, MF	
	R...138	57.11.3472	4.7 kOhm 2%, 0.25W, MF	
	R...139	58.01.8502	5 kOhm 10%, 0.5 W, PMG	
	R...140	57.11.3229	2.2 Ohm 2%, 0.25W, MF	
	R...141	57.11.3301	300 Ohm 2%, 0.25W, MF	
	R...142	57.11.3152	1.5 kOhm 2%, 0.25W, MF	
	R...143	57.11.3332	3.3 kOhm 2%, 0.25W, MF	
	R...145	57.11.3332	3.3 kOhm 2%, 0.25W, MF	
	R...147	57.11.3471	470 Ohm 2%, 0.25W, MF	
	R...149	57.11.3220	22 Ohm 2%, 0.25W, MF	
	R...150	57.11.3220	22 Ohm 2%, 0.25W, MF	
	R...151	57.11.3332	3.3 kOhm 2%, 0.25W, MF	
	R...153	57.11.3332	3.3 kOhm 2%, 0.25W, MF	
	R...155	57.11.3471	470 Ohm 2%, 0.25W, MF	
	R...157	57.11.3220	22 Ohm 2%, 0.25W, MF	
	R...158	57.11.3220	22 Ohm 2%, 0.25W, MF	
	R...159	57.11.3470	47 Ohm 2%, 0.25W, MF	
	R...160	57.11.3229	2.2 Ohm 2%, 0.25W, MF	
	R...161	57.11.3470	47 Ohm 2%, 0.25W, MF	
	R...162	57.11.3472	4.7 kOhm 2%, 0.25W, MF	
	R...163	57.11.3229	2.2 Ohm 2%, 0.25W, MF	
	R...164	57.11.3102	1 kOhm 2%, 0.25W, MF	
	R...165	57.11.3470	47 Ohm 2%, 0.25W, MF	
	R...166	57.11.3472	4.7 kOhm 2%, 0.25W, MF	
	R...167	57.11.3680	68 Ohm 2%, 0.25W, MF	
	R...168	57.11.3682	6.8 kOhm 2%, 0.25W, MF	
	R...169	57.11.3470	47 Ohm 2%, 0.25W, MF	
	R...170	57.11.3229	2.2 Ohm 2%, 0.25W, MF	
	R...171	57.11.3470	47 Ohm 2%, 0.25W, MF	
	R...172	57.11.3472	4.7 kOhm 2%, 0.25W, MF	
	R...173	57.11.3229	2.2 Ohm 2%, 0.25W, MF	
	R...174	57.11.3102	1 kOhm 2%, 0.25W, MF	
	R...175	57.11.3470	47 Ohm 2%, 0.25W, MF	
	R...176	57.11.3472	4.7 kOhm 2%, 0.25W, MF	
	R...177	57.11.3680	68 Ohm 2%, 0.25W, MF	
	R...178	57.11.3682	6.8 kOhm 2%, 0.25W, MF	
	R...179	57.11.3473	47 kOhm 2%, 0.25W, MF	
	R...180	57.11.3100	10 Ohm 2%, 0.25W, MF	
	R...181	57.99.0209	5.5 Ohm PTC	
	R...182	57.11.3569	5.5 Ohm 2%, 0.25W, MF	
	R...183	57.11.3105	1 MOhm 2%, 0.25W, MF	
	R...184	00.00.0000	not used	
	R...185	00.00.0000	not used	
	R...186	57.11.3222	2.2 kOhm 2%, 0.25W, MF	
	R...187	57.11.3222	2.2 kOhm 2%, 0.25W, MF	
	R...188	57.11.3103	10 kOhm 2%, 0.25W, MF	
	R...189	57.11.3682	6.8 kOhm 2%, 0.25W, MF	
	R...190	57.11.3682	6.8 kOhm 2%, 0.25W, MF	
	R...191	57.11.3223	22 kOhm 2%, 0.25W, MF	
	R...192	57.11.3682	6.8 kOhm 2%, 0.25W, MF	
	R...193	57.11.3103	10 kOhm 2%, 0.25W, MF	
	R...194	57.11.3105	1 MOhm 2%, 0.25W, MF	
	R...195	57.11.3681	680 Ohm 2%, 0.25W, MF	
	R...196	00.00.0000	not used	
	R...197	00.00.0000	not used	
	R...198	57.11.3334	330 kOhm 2%, 0.25W, MF	
	R...199	57.11.3224	220 kOhm 2%, 0.25W, MF	
	R...200	57.11.3103	10 kOhm 2%, 0.25W, MF	
	R...201	57.11.3682	6.8 kOhm 2%, 0.25W, MF	
	R...202	57.11.3682	6.8 kOhm 2%, 0.25W, MF	
	R...203	57.11.3103	10 kOhm 2%, 0.25W, MF	
	R...204	00.00.0000	not used	
	R...205	57.11.3181	180 Ohm 2%, 0.25W, MF	
	R...206	57.11.3562	5.6 kOhm 2%, 0.25W, MF	
	R...207	57.11.3104	100 kOhm 2%, 0.25W, MF	
	R...208	57.11.3683	68 kOhm 2%, 0.25W, MF	
	R...209	57.11.3333	33 kOhm 2%, 0.25W, MF	
	R...210	57.11.3333	33 kOhm 2%, 0.25W, MF	
	R...211	57.11.3103	10 kOhm 2%, 0.25W, MF	
	R...212	57.11.3120	12 Ohm 2%, 0.25W, MF	
	R...213	57.11.3560	56 Ohm 2%, 0.25W, MF	
	R...214	57.11.3101	100 Ohm 2%, 0.25W, MF	
	R...215	57.11.3682	6.8 kOhm 2%, 0.25W, MF	
	R...216	57.11.3682	6.8 kOhm 2%, 0.25W, MF	
	R...217	57.11.3682	6.8 kOhm 2%, 0.25W, MF	
	R...218	57.11.3394	390 kOhm 5%, 0.25W, MF	
	R...219	57.11.3104	100 kOhm 2%, 0.25W, MF, with socket	
	R...220	57.11.3222	2.2 kOhm 2%, 0.25W, MF	
	R...221	00.00.0000	not used	
	R...222	57.11.3392	3.9 kOhm 2%, 0.25W, MF	
	R...223	57.11.3563	56 kOhm 2%, 0.25W, MF	
	R...224	57.11.3682	6.8 kOhm 2%, 0.25W, MF	
	R...225	57.11.3393	39 kOhm 2%, 0.25W, MF	
	R...226	57.11.3822	8.2 kOhm 2%, 0.25W, MF	
	R...227	57.11.3473	47 kOhm 2%, 0.25W, MF	
	R...228	57.11.3333	33 kOhm 2%, 0.25W, MF	
	R...229	57.11.3562	5.6 kOhm 2%, 0.25W, MF	
	R...230	57.11.3683	68 kOhm 2%, 0.25W, MF	
	R...231	57.11.3562	5.6 kOhm 2%, 0.25W, MF	
	R...232	57.11.3333	33 kOhm 2%, 0.25W, MF	
	R...233	57.11.3103	10 kOhm 2%, 0.25W, MF	
	R...234	57.11.3271	270 Ohm 2 % 0.25W, MF	
	R...235	57.11.3273	27 kOhm 2%, 0.25W, MF	
	R...236	57.11.3152	1.5 kOhm 2%, 0.25W, MF	
	R...237	57.11.3331	330 Ohm 2%, 0.25W, MF	
	R...238	57.11.3103	10 kOhm 2%, 0.25W, MF	
	R...239	57.11.3103	10 kOhm 2%, 0.25W, MF	
	R...240	57.11.3102	1 kOhm 2%, 0.25W, MF	
	R...241	00.00.0000	not used	
	R...242	57.11.3472	4.7 kOhm 2%, 0.25W, MF	
	R...243	57.11.3473	47 kOhm 2%, 0.25W, MF	
	R...244	57.11.3102	1 kOhm 2%, 0.25W, MF	
	R...245	57.11.3222	2.2 kOhm 2%, 0.25W, MF	
	R...246	58.01.8502	5 kOhm 10%, 0.5 W, PMG	
	R...247	57.11.3821	820 Ohm 2%, 0.25W, MF	
	R...248	57.11.3392	3.9 kOhm 2%, 0.25W, MF	
	R...249	00.00.0000	not used	
	R...250	57.11.3153	15 kOhm 2%, 0.25W, MF	
	R...251	57.11.3473	47 kOhm 2%, 0.25W, MF	
	R...252	57.11.3472	4.7 kOhm 2%, 0.25W, MF	
	R...253	57.11.3472	4.7 kOhm 2%, 0.25W, MF	
	R...254	57.11.3331	330 Ohm 2%, 0.25W, MF	
	R...255	57.11.3102	1 kOhm 2%, 0.25W, MF	
	R...256	57.11.3273	27 kOhm 2%, 0.25W, MF	
	R...257	57.11.3102	1 kOhm 2%, 0.25W, MF	
	R...258	57.11.3471	470 Ohm 2%, 0.25W, MF	
	R...259	57.11.3103	10 kOhm 2%, 0.25W, MF	
	R...260	57.11.3221	220 Ohm 2%, 0.25W, MF	
	R...261	57.11.3122	1.2 kOhm 2%, 0.25W, MF	
	R...262	57.11.3471	470 Ohm 2%, 0.25W, MF	
	R...263	57.11.3223	22 kOhm 2%, 0.25W, MF	
	R...264	57.11.3222	2.2 kOhm 2%, 0.25W, MF	
	R...265	57.11.3473	47 kOhm 2%, 0.25W, MF	
	R...266	57.11.3103	10 kOhm 2%, 0.25W, MF	
	R...267	57.11.3682	6.8 kOhm 2%, 0.25W, MF	
	R...268	57.11.3682	6.8 kOhm 2%, 0.25W, MF	
	R...269	57.11.3103	10 kOhm 2%, 0.25W, MF	
	R...270	57.11.3472	4.7 kOhm 2%, 0.25W, MF	
	R...271	57.11.3122	1.2 kOhm 2%, 0.25W, MF	
	R...272	57.11.3223	22 kOhm 2%, 0.25W, MF	
	R...273	57.11.3223	22 kOhm 2%, 0.25W, MF	
	R...274	57.11.3473	47 kOhm 2%, 0.25W, MF	
	R...275	57.11.3223	22 kOhm 2%, 0.25W, MF	
	R...276	57.11.3103	10 kOhm 2%, 0.25W, MF	
	R...277	57.11.3339	3.3 Ohm 2%, 0.25W, MF	
	R...278	57.11.3103	10 kOhm 2%, 0.25W, MF	
	R...279	57.11.3103	10 kOhm 2%, 0.25W, MF	
	R...280	57.11.3339	3.3 Ohm 2%, 0.25W, MF	
	R...281	57.11.3222	2.2 kOhm 2%, 0.25W, MF	
	R...282	57.11.3222	2.2 kOhm 2%, 0.25W, MF	
	R...283	57.11.3339	3.3 Ohm 2%, 0.25W, MF	
	R...284	57.11.3103	10 kOhm 2%, 0.25W, MF	
	R...285	57.11.3103	10 kOhm 2%, 0.25W, MF	
	R...286	57.11.3339	3.3 Ohm 2%, 0.25W, MF	
	R...287	57.11.3472	4.7 kOhm 2%, 0.25W, MF	
	R...288	57.11.3103	10 kOhm 2%, 0.25W, MF	
	R...289	57.11.3471	470 Ohm 2%, 0.25W, MF	
	R...290	57.11.3391	390 Ohm 2%, 0.25W, MF	
	R...291	57.11.3152	1.5 kOhm 2%, 0.25W, MF	
	R...292	57.92.1151	18 Ohm 150mA, PTC	
	R...293	57.11.3180	18 Ohm 2%, 0.25W, MF	
	R...294	57.11.3470	47 Ohm 2%, 0.25W, MF	
	R...295	57.11.3223	22 kOhm 2%, 0.25W, MF	
	R...296	57.11.3105	1 MOhm 2%, 0.25W, MF	
	R...297	57.11.3472	4.7 kOhm 2%, 0.25W, MF	
	T.....1	1.022.400.00	1:4 Mic Input Trafo	St
	T.....2	1.022.451.00	1:0.62 Line Input Trafo	St
	T.....3	1.022.271.00	Erase Trafo	St
	T.....4	1.022.272.00	Bias Trafo	St
	T.....5	1.022.402.00	1:10 Sync Trafo	St
	T.....6	1.022.355.00	Line Output Trafo	St
	TP....1	54.02.0320	Plug 2.8*0.8	AMP
	TP....2	54.02.0320	Plug 2.8*0.8	AMP
	TP....3	54.02.0320	Plug 2.8*0.8	AMP
	TP....4	54.02.0320	Plug 2.8*0.8	AMP
	TP....5	54.02.0320	Plug 2.8*0.8	AMP
	TP....6	54.02.0320	Plug 2.8*0.8	AMP
	TP....7	54.02.0320	Plug 2.8*0.8	AMP
	W.....1	64.01.0106	Wire Bridge	
	W.....2	64.01.0106	Wire Bridge	
	W.....3	64.01.0106	Wire Bridge	
	W.....4	64.01.0106	Wire Bridge	
	W.....5	64.01.0106	Wire Bridge	
	W.....6	00.00.0000	not used	
	W.....7	64.01.0106	Wire Bridge	
	W.....8	64.01.0106	Wire Bridge	
	W....13	1.010.329.64	Wire Bridge	
	XIC...1	53.03.0166	8-Pole IC Socket	
	XIC...2	53.03.0166	8-Pole IC Socket	
	XIC...3	53.03.0166	8-Pole IC Socket	
	XIC...4	53.03.0168	16-Pole IC Socket	
	XIC...5	53.03.0166	8-Pole IC Socket	
	XIC...6	53.03.0166	8-Pole IC Socket	
	XIC...7	53.03.0166	8-Pole IC Socket	
	XIC...8	53.03.0168	16-Pole IC Socket	
	XIC...9	53.03.0166	8-Pole IC Socket	
	XIC..10	53.03.0166	8-Pole IC Socket	
	XIC..11	53.03.0165	20-Pole IC Socket	
	XIC..12	53.03.0168	16-Pole IC Socket	
	XIC..13	53.03.0166	8-Pole IC Socket	
	XIC..14	53.03.0166	8-Pole IC Socket	
	XIC..15	53.03.0166	8-Pole IC Socket	
	XIC..16	53.03.0168	16-Pole IC Socket	
	XIC..17	53.03.0168	16-Pole IC Socket	
	XIC..18	53.03.0168	16-Pole IC Socket	
	XIC..19	53.03.0166	8-Pole IC Socket	
	XIC..20	53.03.0166	8-Pole IC Socket	
	XIC..21	53.03.0166	8-Pole IC Socket	
	XIC..22	53.03.0166	8-Pole IC Socket	
	XIC..23	53.03.0165	20-Pole IC Socket	
	XIC..24	53.03.0166	8-Pole IC Socket	
	XIC..25	53.03.0166	8-Pole IC Socket	
	XIC..26	53.03.0168	16-Pole IC Socket	
	XIC..27	53.03.0166	8-Pole IC Socket	

Note 1 Variable Phantom Supply

U (V)	POS.NO.	PART NO.	VALUE
48	R 3 / R 4	57990250	6.8 kOhm 0.1 % 0.25 W MF
24	R 3 / R 4		4.3 kOhm 0.1 % 0.25 W MF
12	R 3 / R 4	57990199	680 Ohm 0.1 % 0.25 W MF

Cer = Ceramic EL = Electrolytic PETP = Polyester
PP = Polypropylen MF = Metal Film SI = Silicon
SAL = Solid Aluminium
MANUFACTURER: ADI = Analog Devices Inc. Mot = Motorola
NS = National Semiconductors Ra = Raytheon
Sig = Signetics St = Studer

1.727.479.0C AUDIO ELECTRONICS BOARD HS GP 91/11/2800

1.727.479.0C AUDIO ELECTRONICS BOARD HS GP 94/03/2901

AUDIO ELECTRONICS BOARD TD 1.727.471.00

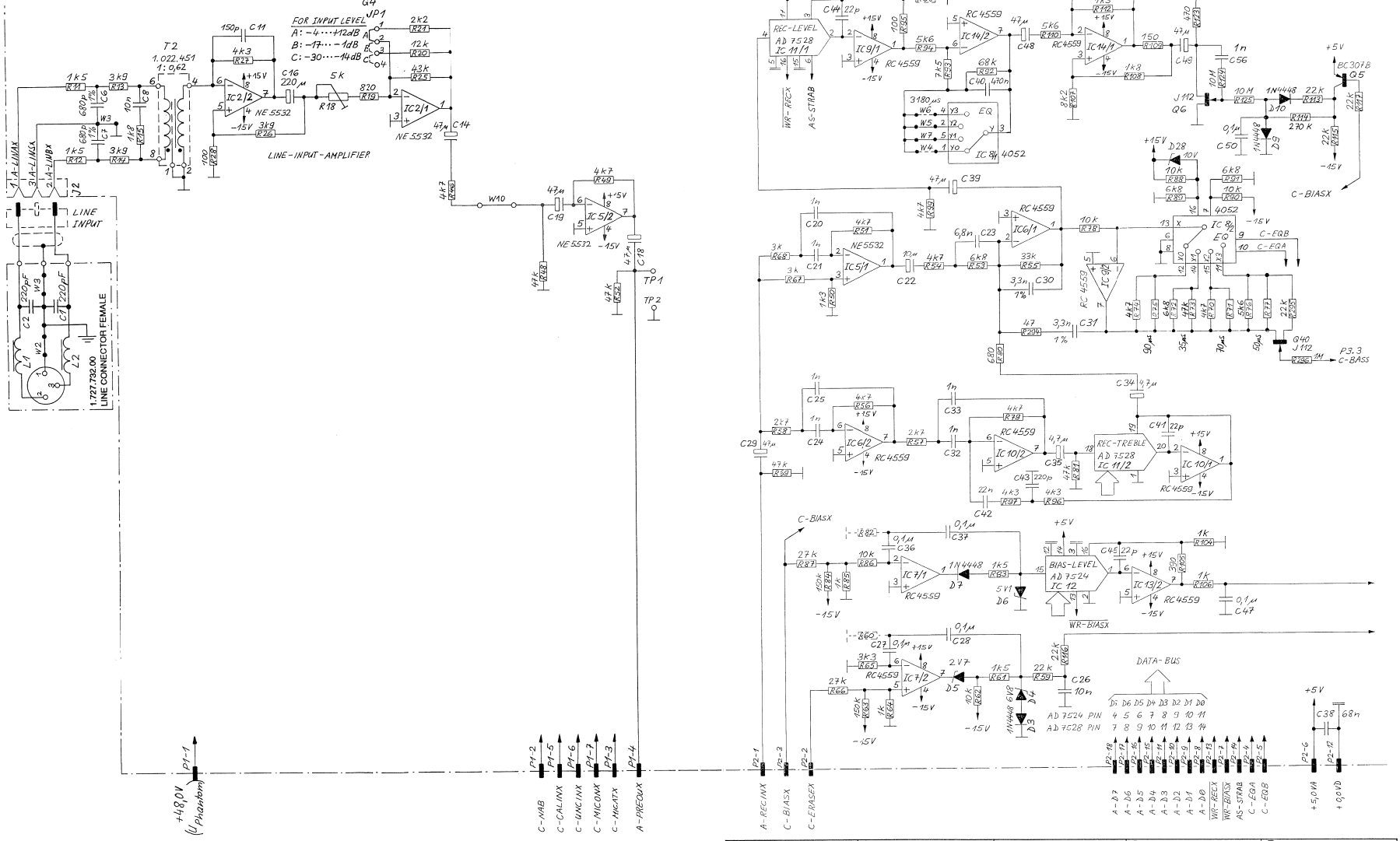

0 28.11.91 GP	1 29.3.94 GP	. .	. .	. .
	A 807 GR 41/42			PAGE 1 OF 6
STUDER	AUDIO ELECTRONICS BOARD TD		SC	1.727.471.00

0 28.11.91 GP	1 29.3.94 GP	. .	. .	. .
	A 807 GR 41/42			PAGE 2 OF 6
STUDER	AUDIO ELECTRONICS BOARD TD		SC	1.727.471.00

AUDIO ELECTRONICS BOARD TD 1.727.471.00

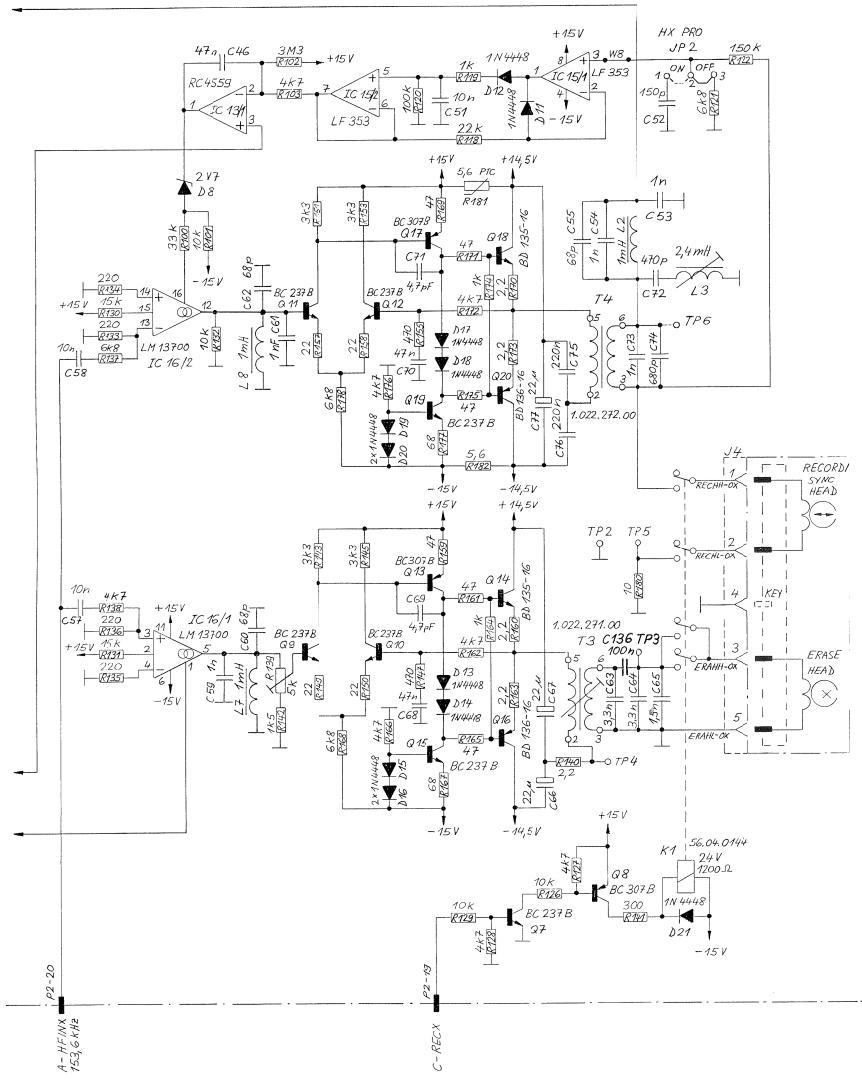

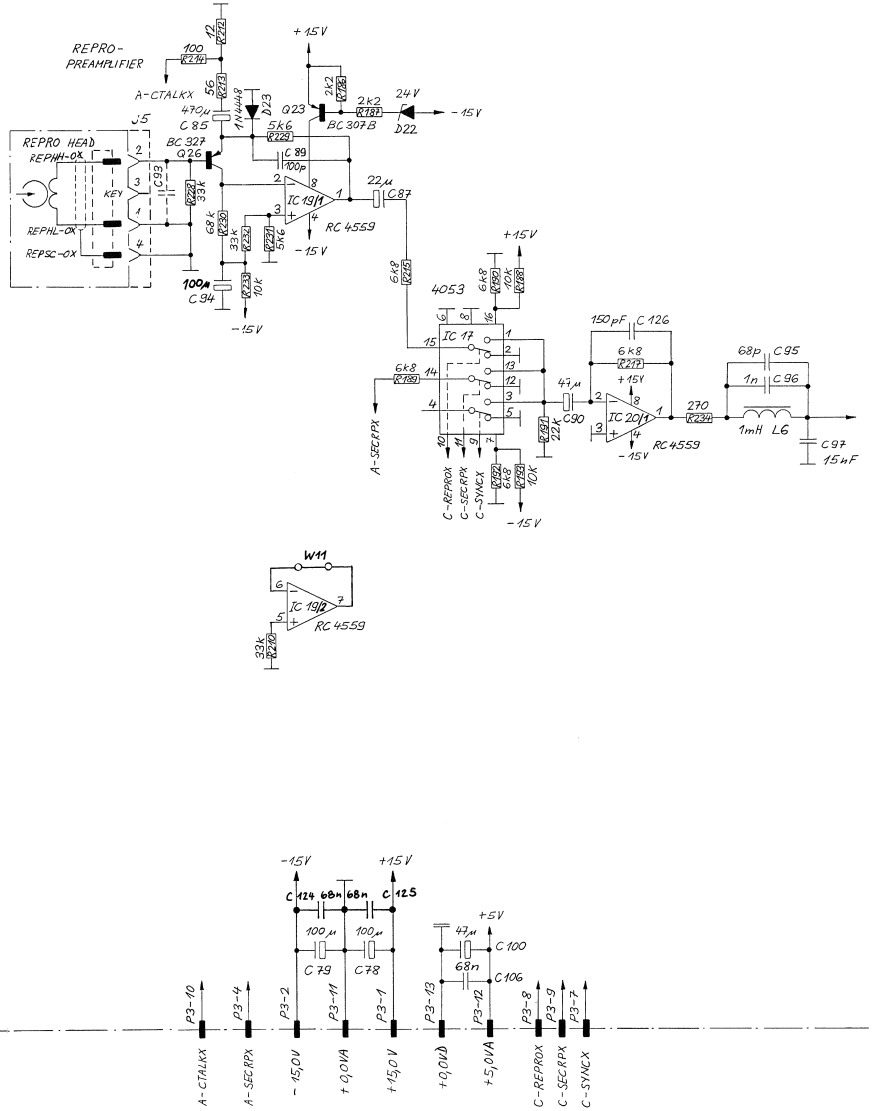

0 28.11.91 GP	1 29.3.94 GP	. .	. .	. .
	A 807 GR 41/42			PAGE 3 OF 6
STUDER	AUDIO ELECTRONICS BOARD TD		SC	1.727.471.00

0 28.11.91 GP	1 29.3.94 GP	. .	. .	. .
	A 807 GR 41/42			PAGE 4 OF 6
STUDER	AUDIO ELECTRONICS BOARD TD		SC	1.727.471.00

AUDIO ELECTRONICS BOARD TD 1.727.471.00

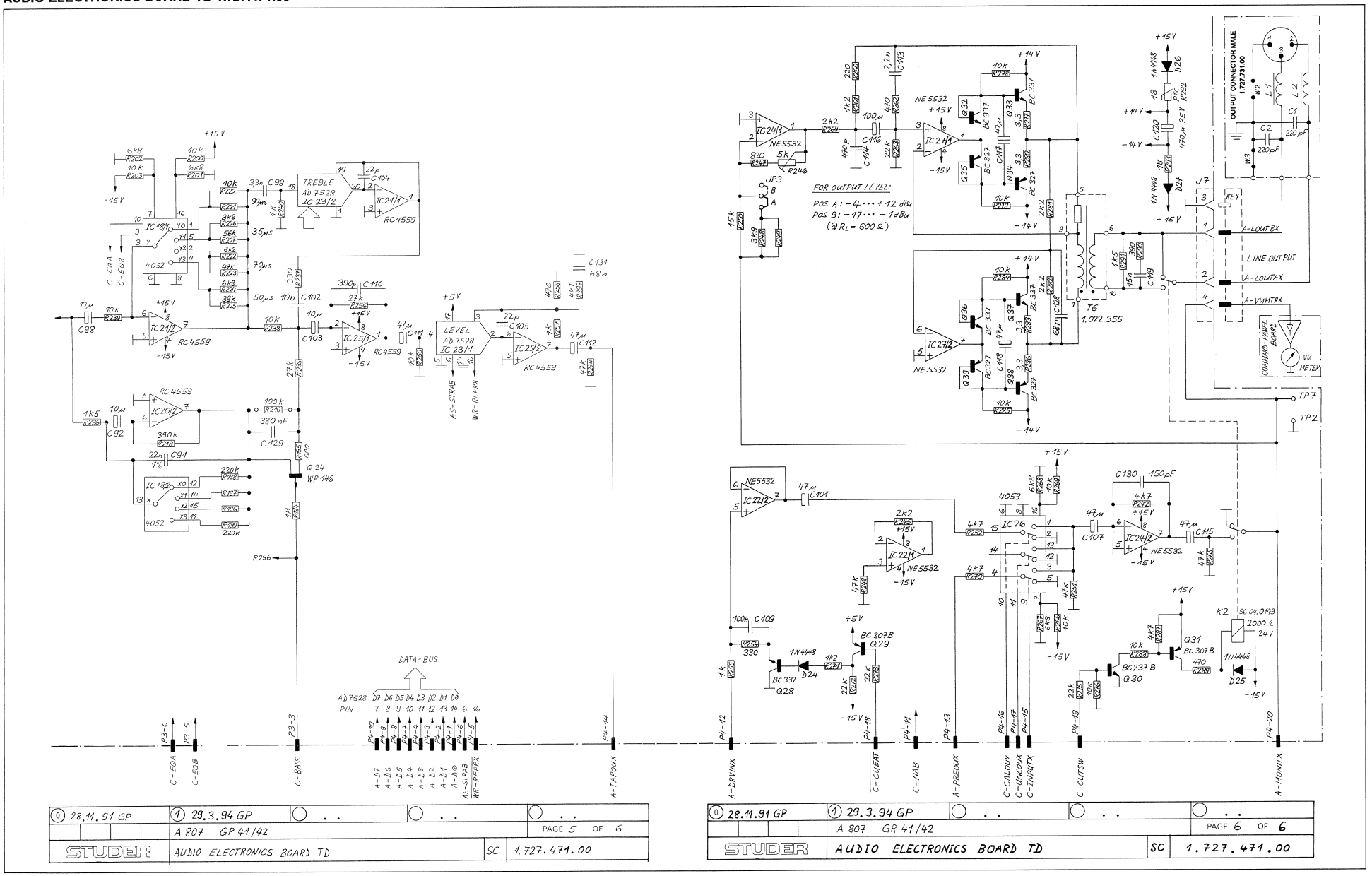

0 28.11.91 GP	1 29.3.94 GP	. .	. .	. .
	A 807 GR 41/42			PAGE 5 OF 6
STUDER	AUDIO ELECTRONICS BOARD TD		SC	1.727.471.00

0 28.11.91 GP	1 29.3.94 GP	. .	. .	. .
	A 807 GR 41/42			PAGE 6 OF 6
STUDER	AUDIO ELECTRONICS BOARD TD		SC	1.727.471.00

AUDIO ELECTRONICS BOARD TD 1.727.471.00

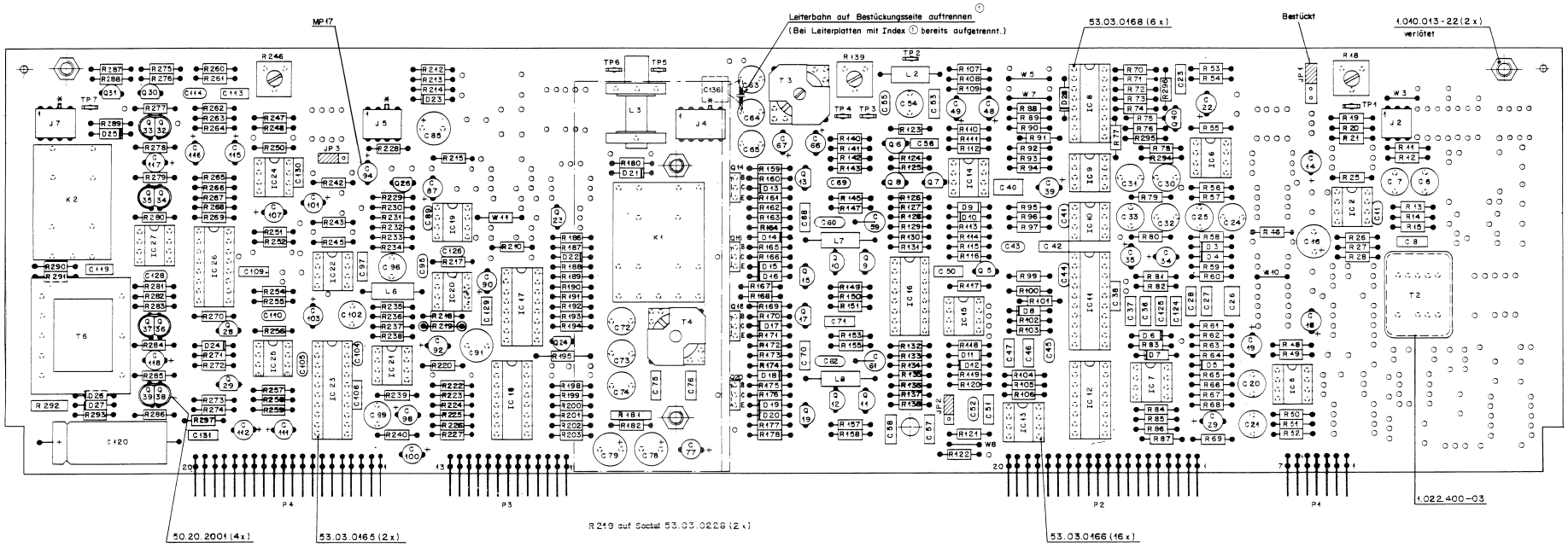

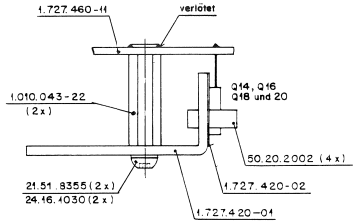

R18 INPUT LEVEL ADJUSTMENT
R139 ERASE VOLTAGE ADJUSTMENT
R246 OUTPUT LEVEL ADJUSTMENT
L3 BIAS TRAP
T3 ERASE HEAD CIRCUIT

JP1 INPUT LEVEL SENSITIVITY
JP2 HX PRO: A = ON, B = OFF
JP3 OUTPUT LEVEL SENSITIVITY

TP1 RECORD AMPLIFIER SIGNAL (0.775V = 0VU)
TP2 0.0V
TP3 VOLTAGE ON ERASE HEAD
TP4 PRIMARY CURRENT ON ERASE TRANSFORMER
TP5 BIAS CURRENT ON 10 Ω
TP6 REJECTOR FILTER ADJUSTMENT
TP7 VU METER SIGNAL (0.775V = 0VU)

① C 136 neu dazu

* Codierung: Schaltdraht 64.01.0108 ⌀0,8 x 8 mm
(muss 1 mm vorstehen)

Nr. Etikette 1.727.461-40
Warnschild 43.04.0108

Änderung					
					③
					②
	29.3.94				①
Ausgabe	13.12.91				⓪
	Datum	Gez.	Gepr.	Ges.	Index

Kopie für:

STUDER REGENSDORF ZÜRICH	Benennung: AUDIO-ELECTRONICS BOARD TD ESE	Nummer: 1.727.471-00

AUDIO ELECTRONICS BOARD TD 1.727.471.00

Ad	..POS..	...REF.No...	DESCRIPTION				MANUFACTURER
	C.....6	59.05.1681	680 pF	1%	50V	PP	
	C.....7	59.05.1681	680 pF	1%	50V	PP	
	C.....8	59.06.0103	10 nF	10%	50V	PETP	
	C....11	59.34.4151	150 pF	10%	50V	Cer	
	C....14	59.22.3470	47 uF	-20%	10V	EL	
	C....16	59.22.2221	220 uF	-20%	6.3V	EL	
	C....18	59.22.3470	47 uF	-20%	10V	EL	
	C....19	59.22.3470	47 uF	-20%	10V	EL	
	C....20	59.05.2102	1 nF	2.5%	50V	PP	
	C....21	59.05.2102	1 nF	2.5%	50V	PP	
	C....22	59.22.6100	10 uF	-20%	35V	EL	
	C....23	59.06.5682	6.8 nF	5%	50V	PETP	
	C....24	59.05.2102	1 nF	2.5%	50V	PP	
	C....25	59.05.2102	1 nF	2.5%	50V	PP	
	C....26	59.06.0103	10 nF	10%	50V	PETP	
	C....27	59.06.5104	100 nF	5%	50V	PETP	
	C....28	59.06.5104	100 nF	5%	50V	PETP	
	C....29	59.22.3470	47 uF	-20%	10V	EL	
	C....30	59.05.1332	3.3 nF	1%	50V	PP	
	C....31	59.05.1332	3.3 nF	1%	50V	PP	
	C....32	59.05.2102	1 nF	2.5%	50V	PP	
	C....33	59.05.2102	1 nF	2.5%	50V	PP	
	C....34	59.22.8479	4.7 uF	-20%	35V	EL	
	C....35	59.22.8479	4.7 uF	-20%	35V	EL	
	C....36	59.06.5104	100 nF	5%	50V	PETP	
	C....37	59.06.5104	100 nF	5%	50V	PETP	
	C....38	59.06.0683	68 nF	10%	50V	PETP	
	C....39	59.22.3470	47 uF	-20%	10V	EL	
	C....40	59.06.5474	470 nF	5%	50V	PETP	
	C....41	59.34.2220	22 pF	10%	50V	Cer	
	C....42	59.06.0223	22 nF	10%	50V	PETP	
	C....43	59.34.4221	220 pF	5%	50V	Cer	
	C....44	59.34.2220	22 pF	10%	50V	Cer	
	C....45	59.34.2220	22 pF	10%	50V	Cer	
	C....46	59.06.0473	47 nF	10%	50V	PETP	
	C....47	59.06.0104	100 nF	10%	50V	PETP	
	C....48	59.22.3470	47 uF	-20%	10V	EL	
	C....49	59.22.3470	47 uF	-20%	10V	EL	
	C....50	59.06.0104	100 nF	10%	50V	PETP	
	C....51	59.06.0103	10 nF	10%	50V	PETP	
	C....52	59.34.4151	150 pF	5%	50V	Cer	
	C....53	59.06.0102	1 nF	10%	50V	PETP	
	C....54	59.05.2102	1 nF	2.5%	50V	PP	
	C....55	59.34.4680	68 pF	10%	50V	Cer	
	C....56	59.06.0102	1 nF	10%	50V	PETP	
	C....57	59.06.0103	10 nF	10%	50V	PETP	
	C....58	59.06.0103	10 nF	10%	50V	PETP	
	C....59	59.12.9102	1nF	1%	50V	PP	
	C....60	59.34.4680	68 pF	5%	50V	Cer	
	C....61	59.12.9102	1nF	1%	50V	PP	
	C....62	59.34.4680	68 pF	5%	50V	Cer	
	C....63	59.05.2332	3.3 nF	2.5%	160V	PP	
	C....64	59.05.2332	3.3 nF	2.5%	160V	PP	
	C....65	59.05.2152	1.5 nF	2.5%	160V	PP	
	C....66	59.22.6220	22 uF	-20%	35V	EL	
	C....67	59.22.6220	22 uF	-20%	35V	EL	
	C....68	59.06.0473	47 nF	10%	50V	PETP	
	C....69	59.34.0479	4.7 pF	10%	50V	Cer	
	C....70	59.06.0473	47 nF	10%	50V	PETP	
	C....71	59.34.0479	4.7 pF	10%	50V	Cer	
	C....72	59.05.2471	470 pF	2.5%	630V	PP	
	C....73	59.05.1102	1 nF	1%	630V	PP	
	C....74	59.05.1681	680 pF	1%	630V	PP	
	C....75	59.06.0224	220 nF	10%	50V	PETP	
	C....76	59.06.0224	220 nF	10%	50V	PETP	
	C....77	59.22.6220	22 uF	-20%	35V	EL	
	C....78	59.22.5101	100 uF	-20%	25V	EL	
	C....79	59.22.5101	100 uF	-20%	25V	EL	
	C....85	59.22.2471	470 uF	-20%	6.3V	EL	
	C....87	59.22.5220	22 uF	-20%	25V	EL	
	C....89	59.34.4101	100 pF	5%	50V	Cer	
	C....90	59.22.3470	47 uF	-20%	10V	EL	
	C....91	59.05.1223	22 nF	1%	50V	PP	
	C....92	59.26.2100	10 uF	20%	10V	SAL	
	C....93	00.00.0000	not used				
	C....94	59.41.5101	100 uF	-20%	25V	EL, with Isolation 50.20.1003	
	C....95	59.34.4680	68 pF	10%	50V	Cer	
	C....96	59.05.2102	1 nF	2.5%	50V	PP	
	C....97	59.06.0153	15 nF	10%	50V	PETP	
	C....98	59.22.6100	10 uF	-20%	35V	EL	
	C....99	59.05.2332	3.3 nF	2.5%	50V	PP	
	C...100	59.22.3470	47 uF	-20%	10V	EL	
	C...101	59.22.3470	47 uF	-20%	10V	EL	
	C...102	59.05.2103	10 nF	2.5%	50V	PP	
	C...103	59.22.6100	10 uF	-20%	35V	EL	
	C...104	59.34.2220	22 pF	10%	50V	Cer	
	C...105	59.34.2220	22 pF	10%	50V	Cer	
	C...106	59.06.0683	68 nF	10%	50V	PETP	
	C...107	59.22.3470	47 uF	-20%	10V	EL	
	C...109	59.06.0104	100 nF	10%	50V	PETP	
	C...110	59.34.5391	390 pF	10%	50V	Cer	
	C...111	59.22.3470	47 uF	-20%	10V	EL	
	C...112	59.22.3470	47 uF	-20%	10V	EL	
	C...113	59.06.0222	2.2 nF	10%	50V	PETP	
	C...114	59.34.5471	470 pF	10%	50V	Cer	
	C...115	59.22.3470	47 uF	-20%	10V	EL	
	C...116	59.22.3101	100 uF	-20%	10V	EL	
	C...117	59.22.3470	47 uF	-20%	10V	EL	
	C...118	59.22.3470	47 uF	-20%	10V	EL	
	C...119	59.06.0153	15 nF	10%	50V	PETP	
	C...120	59.25.5471	470 uF	-20%	35V	EL	
	C...124	59.06.0683	68 nF	10%	50V	PETP	
	C...125	59.06.0683	68 nF	10%	50V	PETP	
	C...126	59.34.4151	150 pF	10%	50V	Cer	
	C...128	59.34.4680	68 pF	10%	50V	Cer	
	C...129	59.06.5334	330 nF	5%	50V	PETP	
	C...130	59.34.4151	150 pF	10%	50V	Cer	
	C...131	59.06.0683	68 nF	10%	50V	PETP	
01	C...136	59.06.0104	100 nF	10%	50V	PETP	
	D.....3	50.04.0125	1N4448		50V	SI	
	D.....4	50.04.1102	6.8 V	5%	0.4W	Zener	
	D.....5	50.04.1106	2.7 V	5%,	0.4W	Zener	
	D.....6	50.04.1112	5.1 V	5%,	0.4W	Zener	
	D.....7	50.04.0125	1N4448		50V	SI	
	D.....8	50.04.1106	2.7 V	5%,	0.4W	Zener	
	D.....9	50.04.0125	1N4448		50V	SI	
	D....10	50.04.0125	1N4448		50V	SI	
	D....11	50.04.0125	1N4448		50V	SI	
	D....12	50.04.0125	1N4448		50V	SI	
	D....13	50.04.0125	1N4448		50V	SI	
	D....14	50.04.0125	1N4448		50V	SI	
	D....15	50.04.0125	1N4448		50V	SI	
	D....16	50.04.0125	1N4448		50V	SI	
	D....17	50.04.0125	1N4448		50V	SI	
	D....18	50.04.0125	1N4448		50V	SI	
	D....19	50.04.0125	1N4448		50V	SI	
	D....20	50.04.0125	1N4448		50V	SI	
	D....21	50.04.0125	1N4448		50V	SI	
	D....22	50.04.1121	24 V	5%	0.4W	Zener	
	D....23	50.04.0125	1N4448		50V	SI	
	D....24	50.04.0125	1N4448		50V	SI	
	D....25	50.04.0125	1N4448		50V	SI	
	D....26	50.04.0125	1N4448		50V	SI	
	D....27	50.04.0125	1N4448		50V	SI	
	D....28	50.04.1114	10 V	5%	0.4W	Zener	
	IC....2	50.09.0105	NE 5532 N	Dual Op. Amp.			Sig
	IC....5	50.09.0105	NE 5532 N	Dual Op. Amp.			Sig
	IC....6	50.09.0107	RC 4559	Dual Op. Amp.			Ra
	IC....7	50.09.0107	RC 4559	Dual Op. Amp.			Ra
	IC....8	50.07.0024	MC 14052	CMOS Analog Switch			Mot
	IC....9	50.09.0107	RC 4559	Dual Op. Amp.			Ra
	IC...10	50.09.0107	RC 4559	Dual Op. Amp.			Ra
	IC...11	50.07.0026	AD 7528JN	Dual 8-bit D/A Converter			ADI
	IC...12	50.07.0002	AD 7524JN	8-bit D/A Converter			ADI
	IC...13	50.09.0107	RC 4559	Dual Op. Amp.			Ra
	IC...14	50.09.0107	RC 4559	Dual Op. Amp.			Ra
	IC...15	50.09.0101	LF 353	Dual Op. Amp.			NS
	IC...16	50.09.0112	LM 13700	Dual OTA			NS
	IC...17	50.07.0015	MC 14053	CMOS Analog Switch			Mot
	IC...18	50.07.0024	MC 14052	CMOS Analog Switch			Mot
	IC...19	50.09.0107	RC 4559	Dual Op. Amp.			Ra
	IC...20	50.09.0107	RC 4559	Dual Op. Amp.			Ra
	IC...21	50.09.0107	RC 4559	Dual Op. Amp.			Ra
	IC...22	50.09.0105	NE 5532 N	Dual Op. Amp.			Sig
	IC...23	50.07.0026	AD 7528JN	Dual 8-bit D/A Converter			ADI
	IC...24	50.09.0105	NE 5532 N	Dual Op. Amp.			Sig
	IC...25	50.09.0107	RC 4559	Dual Op. Amp.			Ra
	IC...26	50.07.0015	MC 14053	CMOS Analog Switch			Mot
	IC...27	50.09.0105	NE 5532 N	Dual Op. Amp.			Sig
	J.....2	54.01.0249	3-Pole	CIS Socket Strip			AMP
	J.....4	54.01.0305	5-Pole	CIS Socket Strip			AMP
	J.....5	54.01.0304	4-Pole	CIS Socket Strip			AMP
	J.....7	54.01.0304	4-Pole	CIS Socket Strip			AMP
	JP....1	54.01.0021		Bridge			
	JP....2	54.01.0021		Bridge			
	JP....3	54.01.0021		Bridge			
	K.....1	56.04.0144	4*U	Relay, 24V, 1200 Ohm			
	K.....2	56.04.0143	2*U	Relay, 24V, 2000 Ohm			
	L.....2	62.01.0128	1mH				
	L.....3	1.177.231.00	2.4mH				St
	L.....6	62.01.0128	1mH				
	L.....7	62.01.0128	1mH				
	L.....8	62.01.0128	1mH				
	MP....1	54.01.0020	4 pcs	Contact Pin JP1			
	MP....2	54.01.0020	3 pcs	Contact Pin JP2			
	MP....3	54.01.0020	3 pcs	Contact Pin JP3			
	MP....4	1.010.043.22	2 pcs	Rivet Nut M3*20			
	MP....5	21.51.8355	2 pcs	Screw M3*8			
	MP....6	24.16.1030	2 pcs	Washer			
	MP....7	50.20.2001	4 pcs	Clip, 2*T092			
	MP....8	1.727.420.01	1 pce	Heatsink			St
	MP....9	1.727.420.02	1 pce	Thermoplastic			St
	MP...10	1.727.471.10	1 pce	No. Label			St
	MP...11	1.727.460.11	1 pce	Audio Electronics PCB			St
	MP...12	1.022.400.03	1 pce	Isolation T2			St
	MP...13	1.010.013.22	2 pcs	Rivet Nut M3*3			
	MP...14	50.20.2002	4 pcs	Clip, T0126			

AUDIO ELECTRONICS BOARD TD 1.727.471.00

Ad	..POS..	...REF.No...	DESCRIPTION			MANUFACTURER
	MP...15	43.01.0108	1 pce	ESE Warning Label		
	MP...16	53.03.0228	2 pcs	1-Pole Socket (RZ19)		
	MP...17	50.20.1003	1 pce	Isolation for C94		
	P.....1	54.01.0223	7-Pole	CIS Pin Strip		
	P.....2	54.01.0261	20-Pole	CIS Pin Strip		
	P.....3	54.01.0273	13-Pole	CIS Pin Strip		
	P.....4	54.01.0261	20-Pole	CIS Pin Strip		
	Q.....5	50.03.0515	BC307B	BC557B, BC560B	PNP	
	Q.....6	50.03.0350	J112		FET	Mot
	Q.....7	50.03.0436	BC237B	BC547B, BC550B	NPN	
	Q.....8	50.03.0515	BC307B	BC557B, BC560B	PNP	
	Q.....9	50.03.0436	BC237B	BC547B, BC550B	NPN	
	Q....10	50.03.0436	BC237B	BC547B, BC550B	NPN	
	Q....11	50.03.0436	BC237B	BC547B, BC550B	NPN	
	Q....12	50.03.0436	BC237B	BC547B, BC550B	NPN	
	Q....13	50.03.0515	BC307B	BC557B, BC560B	PNP	
	Q....14	50.03.0495	BD135-16		NPN	
	Q....15	50.03.0436	BC237B	BC547B, BC550B	NPN	
	Q....16	50.03.0510	BD136-16		PNP	
	Q....17	50.03.0515	BC307B	BC557B, BC560B	PNP	
	Q....18	50.03.0495	BD135-16		NPN	
	Q....19	50.03.0436	BC237B	BC547B, BC550B	NPN	
	Q....20	50.03.0510	BD136-16		PNP	
	Q....23	50.03.0515	BC307B	BC557B, BC560B	PNP	
	Q....24	50.03.0329	WP146		FET	Mot
	Q....26	50.03.0625	BC327		PNP	
	Q....28	50.03.0340	BC337-25		NPN	
	Q....29	50.03.0515	BC307B	BC557B, BC560B	NPN	
	Q....30	50.03.0436	BC237B	BC547B, BC550B	NPN	
	Q....31	50.03.0515	BC307B	BC557B, BC560B	NPN	
	Q....32	50.03.0516	BC337	matched with Q33,	NPN	
	Q....33	50.03.0516	BC337	matched with Q32,	NPN	
	Q....34	50.03.0625	BC327	matched with Q35,	PNP	
	Q....35	50.03.0625	BC327	matched with Q34,	PNP	
	Q....36	50.03.0516	BC337	matched with Q37,	NPN	
	Q....37	50.03.0516	BC337	matched with Q36,	NPN	
	Q....38	50.03.0625	BC327	matched with Q39,	PNP	
	Q....39	50.03.0625	BC327	matched with Q38,	PNP	
	Q....40	50.03.0350	J112		FET	Mot
	R....11	57.11.3152	1.5 kOhm	2%, 0.25W, MF		
	R....12	57.11.3152	1.5 kOhm	2%, 0.25W, MF		
	R....13	57.11.3392	3.9 kOhm	2%, 0.25W, MF		
	R....14	57.11.3392	3.9 kOhm	2%, 0.25W, MF		
	R....15	57.11.3182	1.8 kOhm	2%, 0.25W, MF		
	R....18	58.01.8502	5 kOhm	10%, 0.5 W, PMG		
	R....19	57.11.3821	820 Ohm	2%, 0.25W, MF		
	R....20	57.11.3123	12 kOhm	2%, 0.25W, MF		
	R....21	57.11.3222	2.2 kOhm	2%, 0.25W, MF		
	R....25	57.11.3433	43 kOhm	2%, 0.25W, MF		
	R....26	57.11.3392	3.9 kOhm	2%, 0.25W, MF		
	R....27	57.11.3432	4.3 kOhm	2%, 0.25W, MF		
	R....28	57.11.3101	100 Ohm	2%, 0.25W, MF		
	R....46	57.11.3472	4.7 kOhm	2%, 0.25W, MF		
	R....48	57.11.3473	47 kOhm	2%, 0.25W, MF		
	R....49	57.11.3472	4.7 kOhm	2%, 0.25W, MF		
	R....50	57.11.3132	1.3 kOhm	2%, 0.25W, MF		
	R....51	57.11.3472	4.7 kOhm	2%, 0.25W, MF		
	R....52	57.11.3473	47 kOhm	2%, 0.25W, MF		
	R....53	57.11.3682	6.8 kOhm	2%, 0.25W, MF		
	R....54	57.11.3472	4.7 kOhm	2%, 0.25W, MF		
	R....55	57.11.3333	33 kOhm	2%, 0.25W, MF		
	R....56	57.11.3472	4.7 kOhm	2%, 0.25W, MF		
	R....57	57.11.3272	2.7 kOhm	2%, 0.25W, MF		
	R....58	57.11.3272	2.7 kOhm	2%, 0.25W, MF		
	R....59	57.11.3223	22 kOhm	2%, 0.25W, MF		
	R....60	00.00.0000		not used		
	R....61	57.11.3152	1.5 kOhm	2%, 0.25W, MF		
	R....62	57.11.3103	10 kOhm	2%, 0.25W, MF		
	R....63	57.11.3154	150 kOhm	2%, 0.25W, MF		
	R....64	57.11.3102	1 kOhm	2%, 0.25W, MF		
	R....65	57.11.3332	3.3 kOhm	2%, 0.25W, MF		
	R....66	57.11.3273	27 kOhm	2%, 0.25W, MF		
	R....67	57.11.3302	3 kOhm	2%, 0.25W, MF		
	R....68	57.11.3302	3 kOhm	2%, 0.25W, MF		
	R....69	57.11.3473	47 kOhm	2%, 0.25W, MF		
	R....70	57.11.3472	4.7 kOhm	2%, 0.25W, MF		
	R....71	00.00.0000		not used		
	R....72	57.11.3682	6.8 kOhm	2%, 0.25W, MF		
	R....73	57.11.3473	47 kOhm	2%, 0.25W, MF		
	R....74	57.11.3472	4.7 kOhm	2%, 0.25W, MF		
	R....75	00.00.0000		not used		
	R....76	57.11.3562	5.6 kOhm	2%, 0.25W, MF		
	R....77	00.00.0000		not used		
	R....78	57.11.3103	10 kOhm	2%, 0.25W, MF		
	R....79	57.11.3472	4.7 kOhm	2%, 0.25W, MF		
	R....80	57.11.3681	680 Ohm	2%, 0.25W, MF		
	R....81	57.11.3473	47 kOhm	2%, 0.25W, MF		
	R....82	00.00.0000		not used		
	R....83	57.11.3152	1.5 kOhm	2%, 0.25W, MF		
	R....84	57.11.3154	150 kOhm	2%, 0.25W, MF		
	R....85	57.11.3102	1 kOhm	2%, 0.25W, MF		
	R....86	57.11.3103	10 kOhm	2%, 0.25W, MF		
	R....87	57.11.3273	27 kOhm	2%, 0.25W, MF		
	R....88	57.11.3103	10 kOhm	2%, 0.25W, MF		
	R....89	57.11.3682	6.8 kOhm	2%, 0.25W, MF		
	R....90	57.11.3103	10 kOhm	2%, 0.25W, MF		
	R....91	57.11.3682	6.8 kOhm	2%, 0.25W, MF		
	R....92	57.11.3683	68 kOhm	2%, 0.25W, MF		
	R....93	57.11.3752	7.5 kOhm	2%, 0.25W, MF		
	R....94	57.11.3562	5.6 kOhm	2%, 0.25W, MF		
	R....95	57.11.3101	100 Ohm	2%, 0.25W, MF		
	R....96	57.11.3432	4.3 kOhm	2%, 0.25W, MF		
	R....97	57.11.3432	4.3 kOhm	2%, 0.25W, MF		
	R....98	00.00.0000		not used		
	R....99	57.11.3472	4.7 kOhm	2%, 0.25W, MF		
	R...100	57.11.3333	33 kOhm	2%, 0.25W, MF		
	R...101	57.11.3103	10 kOhm	2%, 0.25W, MF		
	R...102	57.11.5335	3.3 MOhm	5%, 0.25W, MF		
	R...103	57.11.3472	4.7 kOhm	2%, 0.25W, MF		
	R...104	57.11.3102	1 kOhm	2%, 0.25W, MF		
	R...105	57.11.3391	390 Ohm	2%, 0.25W, MF		
	R...106	57.11.3102	1 kOhm	2%, 0.25W, MF		
	R...107	57.11.3822	8.2 kOhm	2%, 0.25W, MF		
	R...108	57.11.3182	1.8 kOhm	2%, 0.25W, MF		
	R...109	57.11.3151	150 Ohm	2%, 0.25W, MF		
	R...110	57.11.3562	5.6 kOhm	2%, 0.25W, MF		
	R...111	57.11.3823	82 kOhm	2%, 0.25W, MF		
	R...112	57.11.3132	1.3 kOhm	2%, 0.25W, MF		
	R...113	57.11.3223	22 kOhm	2%, 0.25W, MF		
	R...114	57.11.3274	270 kOhm	2%, 0.25W, MF		
	R...115	57.11.3223	22 kOhm	2%, 0.25W, MF		
	R...116	57.11.3223	22 kOhm	2%, 0.25W, MF		
	R...117	57.11.3223	22 kOhm	2%, 0.25W, MF		
	R...118	57.11.3223	22 kOhm	2%, 0.25W, MF		
	R...119	57.11.3102	1 kOhm	2%, 0.25W, MF		
	R...120	57.11.3104	100 kOhm	2%, 0.25W, MF		
	R...121	57.11.3682	6.8 kOhm	2%, 0.25W, MF		
	R...122	57.11.3154	150 kOhm	2%, 0.25W, MF		
	R...123	57.11.3471	470 Ohm	2%, 0.25W, MF		
	R...124	57.11.5106	10 MOhm	5%, 0.25W, MF		
	R...125	57.11.5106	10 MOhm	5%, 0.25W, MF		
	R...126	57.11.3103	10 kOhm	2%, 0.25W, MF		
	R...127	57.11.3472	4.7 kOhm	2%, 0.25W, MF		
	R...128	57.11.3472	4.7 kOhm	2%, 0.25W, MF		
	R...129	57.11.3103	10 kOhm	2%, 0.25W, MF		
	R...130	57.11.3153	15 kOhm	2%, 0.25W, MF		
	R...131	57.11.3153	15 kOhm	2%, 0.25W, MF		
	R...132	57.11.3103	10 kOhm	2%, 0.25W, MF		
	R...133	57.11.3221	220 Ohm	2%, 0.25W, MF		
	R...134	57.11.3221	220 Ohm	2%, 0.25W, MF		
	R...135	57.11.3221	220 Ohm	2%, 0.25W, MF		
	R...136	57.11.3221	220 Ohm	2%, 0.25W, MF		
	R...137	57.11.3682	6.8 kOhm	2%, 0.25W, MF		
	R...138	57.11.3472	4.7 kOhm	2%, 0.25W, MF		
	R...139	58.01.8502	5 kOhm	10%, 0.5 W, PMG		
	R...140	57.11.3229	2.2 Ohm	2%, 0.25W, MF		
	R...141	57.11.3301	300 Ohm	2%, 0.25W, MF		
	R...142	57.11.3152	1.5 kOhm	2%, 0.25W, MF		
	R...143	57.11.3332	3.3 kOhm	2%, 0.25W, MF		
	R...145	57.11.3332	3.3 kOhm	2%, 0.25W, MF		
	R...147	57.11.3471	470 Ohm	2%, 0.25W, MF		
	R...149	57.11.3220	22 Ohm	2%, 0.25W, MF		
	R...150	57.11.3220	22 Ohm	2%, 0.25W, MF		
	R...151	57.11.3332	3.3 kOhm	2%, 0.25W, MF		
	R...153	57.11.3332	3.3 kOhm	2%, 0.25W, MF		
	R...155	57.11.3471	470 Ohm	2%, 0.25W, MF		
	R...157	57.11.3220	22 Ohm	2%, 0.25W, MF		
	R...158	57.11.3220	22 Ohm	2%, 0.25W, MF		
	R...159	57.11.3470	47 Ohm	2%, 0.25W, MF		
	R...160	57.11.3229	2.2 Ohm	2%, 0.25W, MF		
	R...161	57.11.3470	47 Ohm	2%, 0.25W, MF		
	R...162	57.11.3472	4.7 kOhm	2%, 0.25W, MF		
	R...163	57.11.3229	2.2 Ohm	2%, 0.25W, MF		
	R...164	57.11.3102	1 kOhm	2%, 0.25W, MF		
	R...165	57.11.3470	47 Ohm	2%, 0.25W, MF		
	R...166	57.11.3472	4.7 kOhm	2%, 0.25W, MF		
	R...167	57.11.3680	68 Ohm	2%, 0.25W, MF		
	R...168	57.11.3682	6.8 kOhm	2%, 0.25W, MF		
	R...169	57.11.3470	47 Ohm	2%, 0.25W, MF		
	R...170	57.11.3229	2.2 Ohm	2%, 0.25W, MF		
	R...171	57.11.3470	47 Ohm	2%, 0.25W, MF		
	R...172	57.11.3472	4.7 kOhm	2%, 0.25W, MF		
	R...173	57.11.3229	2.2 Ohm	2%, 0.25W, MF		
	R...174	57.11.3102	1 kOhm	2%, 0.25W, MF		
	R...175	57.11.3470	47 Ohm	2%, 0.25W, MF		
	R...176	57.11.3472	4.7 kOhm	2%, 0.25W, MF		
	R...177	57.11.3680	68 Ohm	2%, 0.25W, MF		
	R...178	57.11.3682	6.8 kOhm	2%, 0.25W, MF		
	R...180	57.11.3100	10 Ohm	2%, 0.25W, MF		
	R...181	57.99.0209	5.6 Ohm			PTC
	R...182	57.11.3569	5.6 Ohm	2%, 0.25W, MF		
	R...186	57.11.3222	2.2 kOhm	2%, 0.25W, MF		
	R...187	57.11.3222	2.2 kOhm	2%, 0.25W, MF		
	R...188	57.11.3103	10 kOhm	2%, 0.25W, MF		
	R...189	57.11.3682	6.8 kOhm	2%, 0.25W, MF		
	R...190	57.11.3682	6.8 kOhm	2%, 0.25W, MF		
	R...191	57.11.3223	22 kOhm	2%, 0.25W, MF		
	R...192	57.11.3682	6.8 kOhm	2%, 0.25W, MF		
	R...193	57.11.3103	10 kOhm	2%, 0.25W, MF		
	R...194	57.11.3105	1 MOhm	2%, 0.25W, MF		

AUDIO ELECTRONICS BOARD TD 1.727.471.00

Ad	..POS..	...REF.No...	DESCRIPTION	MANUFACTURER
	R...195	57.11.3681	680 Ohm 2%, 0.25W, MF	
	R...196	00.00.0000	not used	
	R...197	00.00.0000	not used	
	R...198	57.11.3224	220 kOhm 2%, 0.25W, MF	
	R...199	57.11.3224	220 kOhm 2%, 0.25W, MF	
	R...200	57.11.3103	10 kOhm 2%, 0.25W, MF	
	R...201	57.11.3682	6.8 kOhm 2%, 0.25W, MF	
	R...202	57.11.3682	6.8 kOhm 2%, 0.25W, MF	
	R...203	57.11.3103	10 kOhm 2%, 0.25W, MF	
	R...210	57.11.3333	33 kOhm 2%, 0.25W, MF	
	R...212	57.11.3120	12 Ohm 2%, 0.25W, MF	
	R...213	57.11.3560	56 Ohm 2%, 0.25W, MF	
	R...214	57.11.3101	100 Ohm 2%, 0.25W, MF	
	R...215	57.11.3682	6.8 kOhm 2%, 0.25W, MF	
	R...217	57.11.3682	6.8 kOhm 2%, 0.25W, MF	
	R...218	57.11.3394	390 kOhm 5%, 0.25W, MF	
	R...219	57.11.3104	100 kOhm 2%, 0.25W, MF, with socket	
	R...220	57.11.3103	10 kOhm 2%, 0.25W, MF	
	R...221	00.00.0000	not used	
	R...222	57.11.3822	8.2 kOhm 2%, 0.25W, MF	
	R...223	57.11.3473	47 kOhm 2%, 0.25W, MF	
	R...224	57.11.3682	6.8 kOhm 2%, 0.25W, MF	
	R...225	57.11.3393	39 kOhm 2%, 0.25W, MF	
	R...226	57.11.3392	3.9 kOhm 2%, 0.25W, MF	
	R...227	57.11.3563	56 kOhm 2%, 0.25W, MF	
	R...228	57.11.3333	33 kOhm 2%, 0.25W, MF	
	R...229	57.11.3562	5.6 kOhm 2%, 0.25W, MF	
	R...230	57.11.3683	68 kOhm 2%, 0.25W, MF	
	R...231	57.11.3562	5.6 kOhm 2%, 0.25W, MF	
	R...232	57.11.3333	33 kOhm 2%, 0.25W, MF	
	R...233	57.11.3103	10 kOhm 2%, 0.25W, MF	
	R...234	57.11.3271	270 Ohm 2 % 0.25W, MF	
	R...235	57.11.3273	27 kOhm 2%, 0.25W, MF	
	R...236	57.11.3152	1.5 kOhm 2%, 0.25W, MF	
	R...237	57.11.3331	330 Ohm 2%, 0.25W, MF	
	R...238	57.11.3103	10 kOhm 2%, 0.25W, MF	
	R...239	57.11.3103	10 kOhm 2%, 0.25W, MF	
	R...240	57.11.3102	1 kOhm 2%, 0.25W, MF	
	R...242	57.11.3472	4.7 kOhm 2%, 0.25W, MF	
	R...243	57.11.3473	47 kOhm 2%, 0.25W, MF	
	R...245	57.11.3222	2.2 kOhm 2%, 0.25W, MF	
	R...246	58.01.8502	5 kOhm 10%, 0.5 W, PMG	
	R...247	57.11.3821	820 Ohm 2%, 0.25W, MF	
	R...248	57.11.3392	3.9 kOhm 2%, 0.25W, MF	
	R...249	00.00.0000	not used	
	R...250	57.11.3153	15 kOhm 2%, 0.25W, MF	
	R...251	57.11.3473	47 kOhm 2%, 0.25W, MF	
	R...252	57.11.3472	4.7 kOhm 2%, 0.25W, MF	
	R...254	57.11.3331	330 Ohm 2%, 0.25W, MF	
	R...255	57.11.3102	1 kOhm 2%, 0.25W, MF	
	R...256	57.11.3273	27 kOhm 2%, 0.25W, MF	
	R...257	57.11.3102	1 kOhm 2%, 0.25W, MF	
	R...258	57.11.3471	470 Ohm 2%, 0.25W, MF	
	R...259	57.11.3103	10 kOhm 2%, 0.25W, MF	
	R...260	57.11.3221	220 Ohm 2%, 0.25W, MF	
	R...261	57.11.3122	1.2 kOhm 2%, 0.25W, MF	
	R...262	57.11.3471	470 Ohm 2%, 0.25W, MF	
	R...263	57.11.3223	22 kOhm 2%, 0.25W, MF	
	R...264	57.11.3222	2.2 kOhm 2%, 0.25W, MF	
	R...265	57.11.3473	47 kOhm 2%, 0.25W, MF	
	R...266	57.11.3103	10 kOhm 2%, 0.25W, MF	
	R...267	57.11.3682	6.8 kOhm 2%, 0.25W, MF	
	R...268	57.11.3682	6.8 kOhm 2%, 0.25W, MF	
	R...269	57.11.3103	10 kOhm 2%, 0.25W, MF	
	R...270	57.11.3472	4.7 kOhm 2%, 0.25W, MF	
	R...271	57.11.3122	1.2 kOhm 2%, 0.25W, MF	
	R...272	57.11.3223	22 kOhm 2%, 0.25W, MF	
	R...273	57.11.3223	22 kOhm 2%, 0.25W, MF	
	R...274	57.11.3473	47 kOhm 2%, 0.25W, MF	
	R...275	57.11.3223	22 kOhm 2%, 0.25W, MF	
	R...276	57.11.3103	10 kOhm 2%, 0.25W, MF	
	R...277	57.11.3339	3.3 Ohm 2%, 0.25W, MF	
	R...278	57.11.3103	10 kOhm 2%, 0.25W, MF	
	R...279	57.11.3103	10 kOhm 2%, 0.25W, MF	
	R...280	57.11.3339	3.3 Ohm 2%, 0.25W, MF	
	R...281	57.11.3222	2.2 kOhm 2%, 0.25W, MF	
	R...282	57.11.3222	2.2 kOhm 2%, 0.25W, MF	
	R...283	57.11.3339	3.3 Ohm 2%, 0.25W, MF	
	R...284	57.11.3103	10 kOhm 2%, 0.25W, MF	
	R...285	57.11.3103	10 kOhm 2%, 0.25W, MF	
	R...286	57.11.3339	3.3 Ohm 2%, 0.25W, MF	
	R...287	57.11.3472	4.7 kOhm 2%, 0.25W, MF	
	R...288	57.11.3103	10 kOhm 2%, 0.25W, MF	
	R...289	57.11.3471	470 Ohm 2%, 0.25W, MF	
	R...290	57.11.3391	390 Ohm 2%, 0.25W, MF	
	R...291	57.11.3152	1.5 kOhm 2%, 0.25W, MF	
	R...292	57.92.1151	18 Ohm 150mA, PTC	
	R...293	57.11.3180	18 Ohm 2%, 0.25W, MF	
	R...294	57.11.3470	47 Ohm 2%, 0.25W, MF	
	R...295	57.11.3223	22 kOhm 2%, 0.25W, MF	
	R...296	57.11.3105	1 MOhm 2%, 0.25W, MF	
	R...297	57.11.3472	4.7 kOhm 2%, 0.25W, MF	
	T.....2	1.022.451.00	1:0.62 Line Input Trafo	St
	T.....3	1.022.271.00	Erase Trafo	St
	T.....4	1.022.272.00	Bias Trafo	St
	T.....6	1.022.355.00	Line Output Trafo	St
	TP....1	54.02.0320	Plug 2.8*0.8	AMP
	TP....2	54.02.0320	Plug 2.8*0.8	AMP
	TP....3	54.02.0320	Plug 2.8*0.8	AMP
	TP....4	54.02.0320	Plug 2.8*0.8	AMP
	TP....5	54.02.0320	Plug 2.8*0.8	AMP
	TP....6	54.02.0320	Plug 2.8*0.8	AMP
	TP....7	54.02.0320	Plug 2.8*0.8	AMP
	W.....3	64.01.0106	Wire Bridge	
	W.....4	00.00.0000	not used	
	W.....5	64.01.0106	Wire Bridge	
	W.....6	00.00.0000	not used	
	W.....7	64.01.0106	Wire Bridge	
	W.....8	64.01.0106	Wire Bridge	
	W....10	64.01.0106	Wire Bridge	
	W....11	57.11.3000	Wire Bridge	
	XIC...2	53.03.0166	8-Pole IC Socket	
	XIC...5	53.03.0166	8-Pole IC Socket	
	XIC...6	53.03.0166	8-Pole IC Socket	
	XIC...7	53.03.0166	8-Pole IC Socket	
	XIC...8	53.03.0168	16-Pole IC Socket	
	XIC...9	53.03.0166	8-Pole IC Socket	
	XIC..10	53.03.0166	8-Pole IC Socket	
	XIC..11	53.03.0165	20-Pole IC Socket	
	XIC..12	53.03.0168	16-Pole IC Socket	
	XIC..13	53.03.0166	8-Pole IC Socket	
	XIC..14	53.03.0166	8-Pole IC Socket	
	XIC..15	53.03.0166	8-Pole IC Socket	
	XIC..16	53.03.0168	16-Pole IC Socket	
	XIC..17	53.03.0168	16-Pole IC Socket	
	XIC..18	53.03.0168	16-Pole IC Socket	
	XIC..19	53.03.0166	8-Pole IC Socket	
	XIC..20	53.03.0166	8-Pole IC Socket	
	XIC..21	53.03.0166	8-Pole IC Socket	
	XIC..22	53.03.0166	8-Pole IC Socket	
	XIC..23	53.03.0165	20-Pole IC Socket	
	XIC..24	53.03.0166	8-Pole IC Socket	
	XIC..25	53.03.0166	8-Pole IC Socket	
	XIC..26	53.03.0168	16-Pole IC Socket	
	XIC..27	53.03.0166	8-Pole IC Socket	

Cer = Ceramic EL = Electrolytic PETP = Polyester
PP = Polypropylen MF = Metal Film SI = Silicon
SAL = Solid Aluminium

MANUFACTURER: ADI = Analog Devices Inc. Mot = Motorola
NS = National Semiconductors Ra = Raytheon
Sig = Signetics St = Studer

1.727.471.00 AUDIO ELECTRONICS BOARD TD GP 91/11/2800

1.727.471.00 AUDIO ELECTRONICS BOARD TD GP 94/03/2901

END
→

AUDIO ELECTRONICS BOARD 2/2 VUK 1.727.472.00
AUDIO ELECTRONICS BOARD 2/2 VUK HS 1.727.477.00

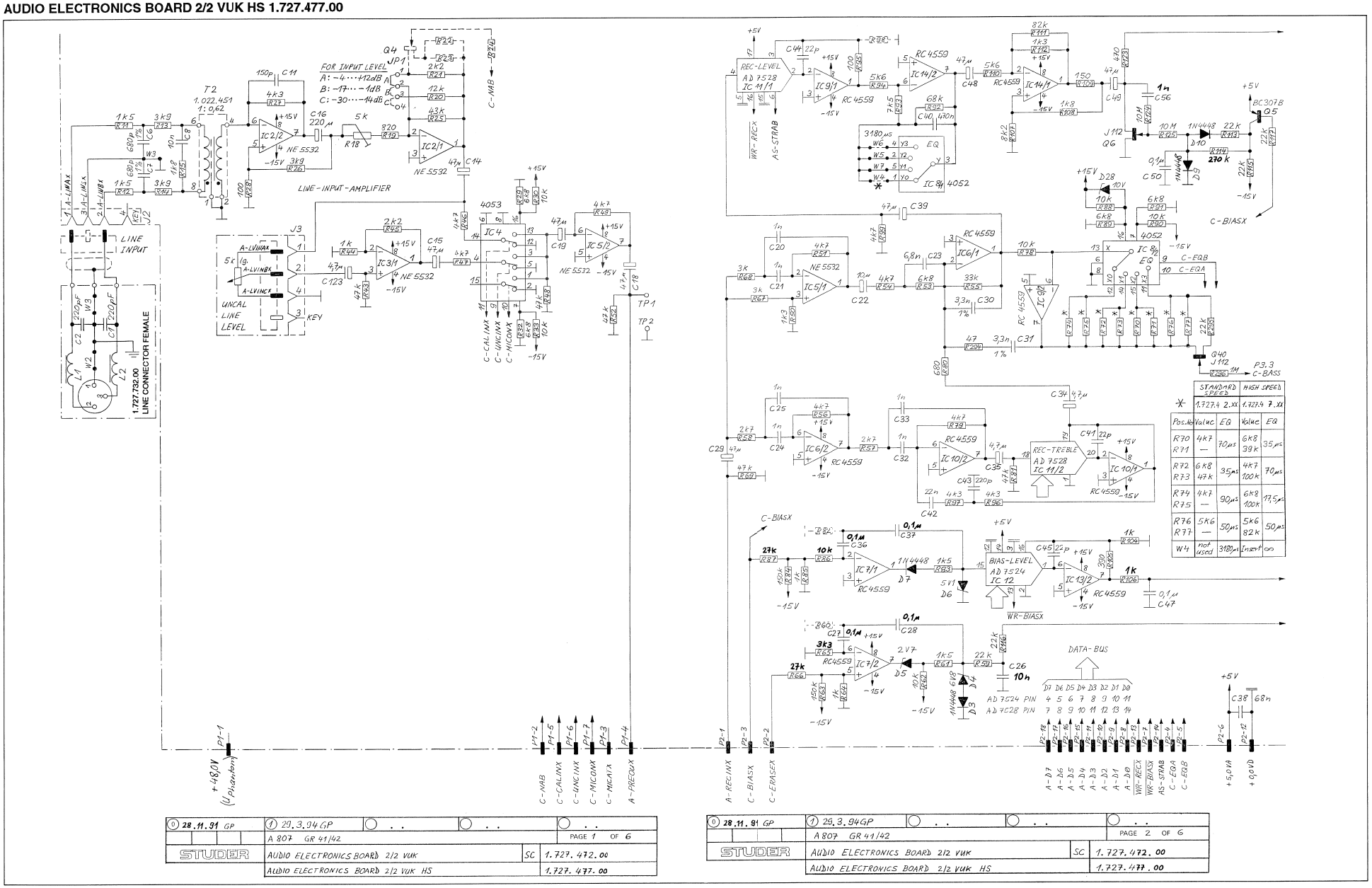

STANDARD SPEED			HIGH SPEED	
*	1.727.4 2.XX		1.727.4 7.XX	
Pos.No.	Value	EQ	Value	EQ
R70 / R71	4k7 / —	70 µs	6k8 / 39k	35 µs
R72 / R73	6k8 / 47k	35 µs	4k7 / 100k	70 µs
R74 / R75	4k7 / —	90 µs	6k8 / 100k	77,5 µs
R76 / R77	5k6 / —	50 µs	5k6 / 82k	50 µs
W4	not used		3180 µs	Insert ∞

0 28.11.91 GP	1 29.3.94 GP	. .	. .	. .
	A 807 GR 41/42			PAGE 1 OF 6
STUDER	AUDIO ELECTRONICS BOARD 2/2 VUK		SC	1.727.472.00
	AUDIO ELECTRONICS BOARD 2/2 VUK HS			1.727.477.00

0 28.11.91 GP	1 29.3.94 GP	. .	. .	. .
	A 807 GR 41/42			PAGE 2 OF 6
STUDER	AUDIO ELECTRONICS BOARD 2/2 VUK		SC	1.727.472.00
	AUDIO ELECTRONICS BOARD 2/2 VUK HS			1.727.477.00

AUDIO ELECTRONICS BOARD 2/2 VUK 1.727.472.00
AUDIO ELECTRONICS BOARD 2/2 VUK HS 1.727.477.00

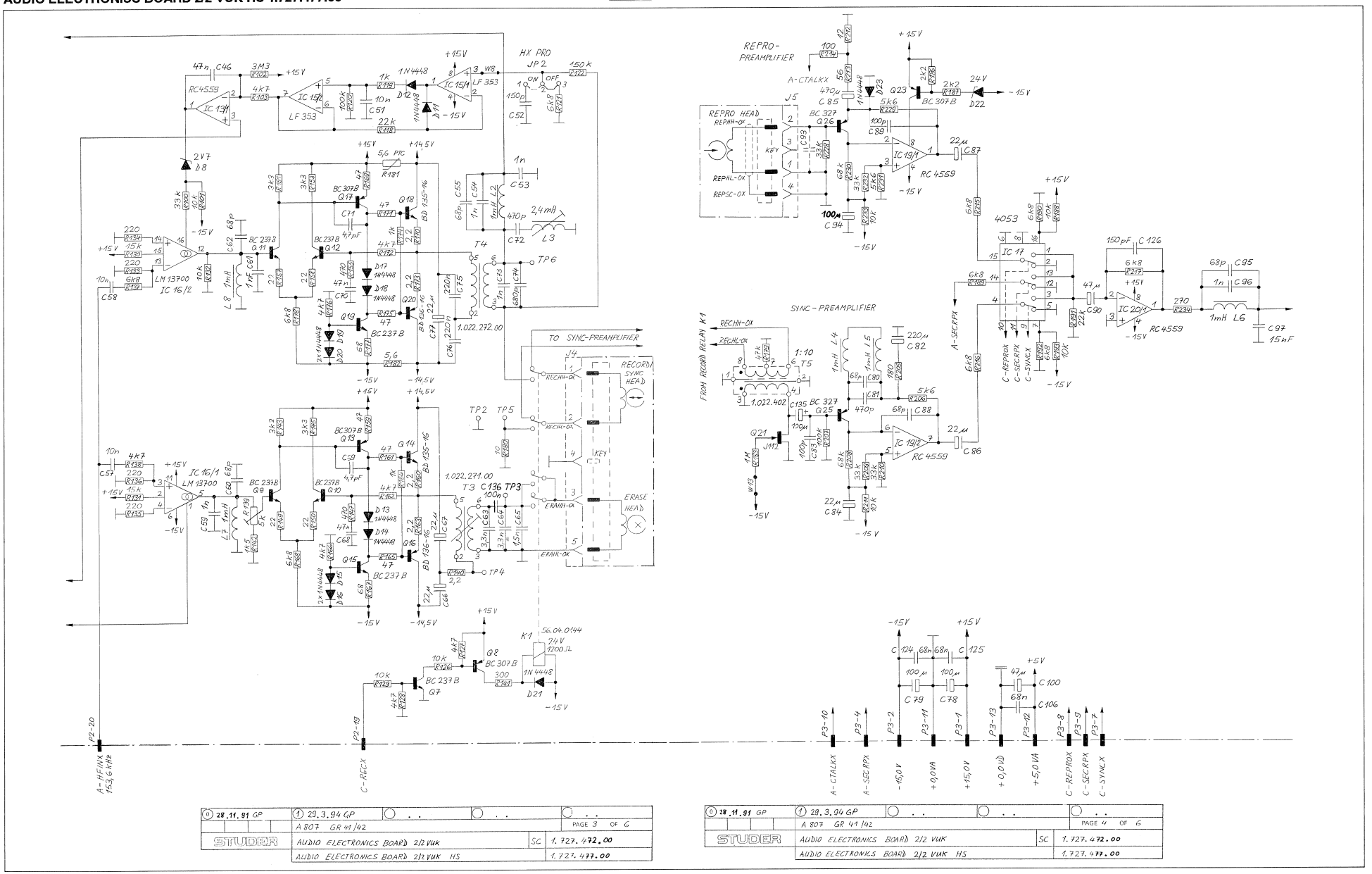

0 28.11.91 GP	1 29.3.94 GP	. .	. .	. .
	A 807 GR 41/42			PAGE 3 OF 6
STUDER	AUDIO ELECTRONICS BOARD 2/2 VUK		SC	1.727.472.00
	AUDIO ELECTRONICS BOARD 2/2 VUK HS			1.727.477.00

0 28.11.91 GP	1 29.3.94 GP	. .	. .	. .
	A 807 GR 41/42			PAGE 4 OF 6
STUDER	AUDIO ELECTRONICS BOARD 2/2 VUK		SC	1.727.472.00
	AUDIO ELECTRONICS BOARD 2/2 VUK HS			1.727.477.00

AUDIO ELECTRONICS BOARD 2/2 VUK 1.727.472.00
AUDIO ELECTRONICS BOARD 2/2 VUK HS 1.727.477.00

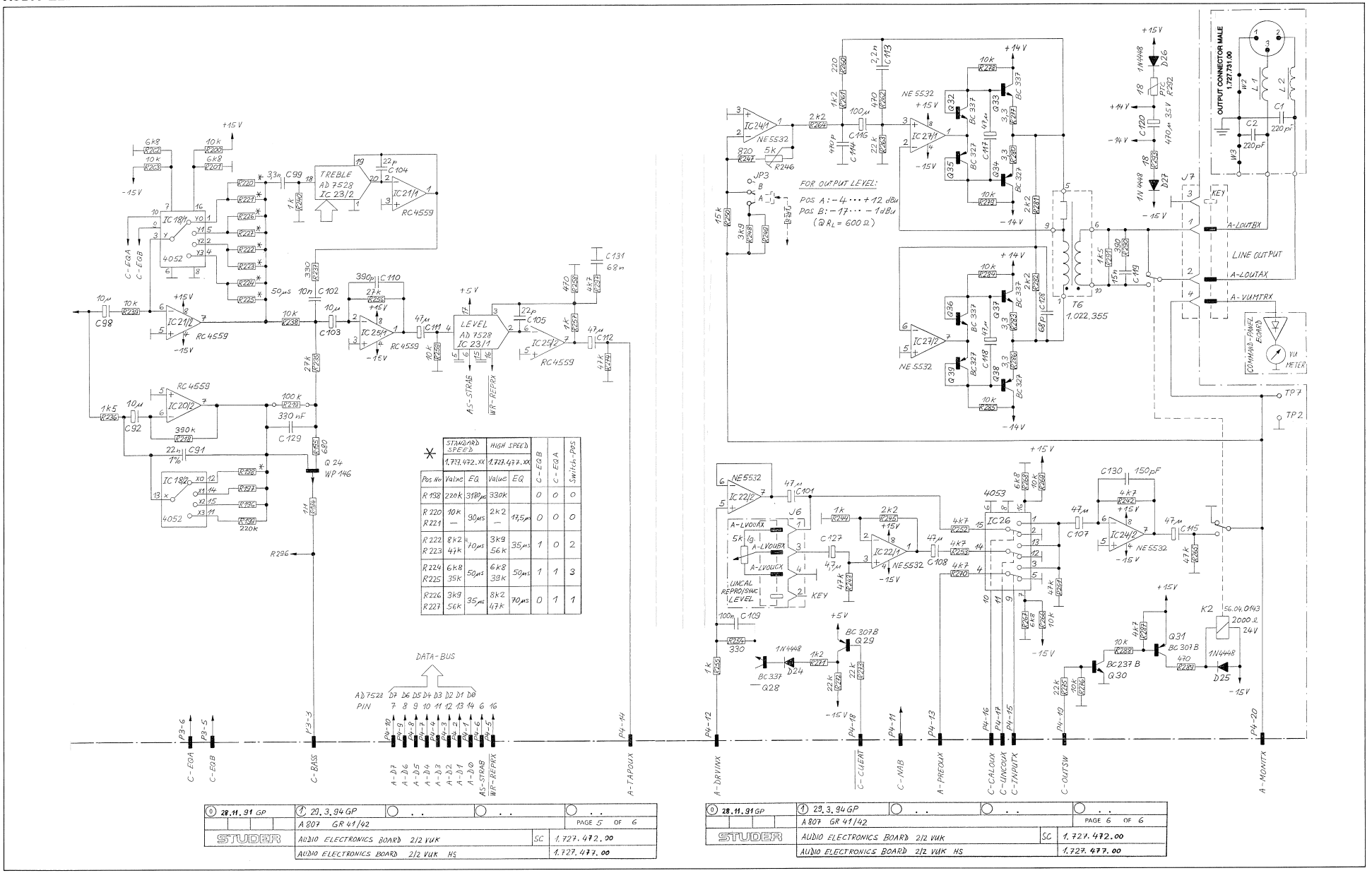

STANDARD SPEED 1.727.472.XX			HIGH SPEED 1.727.477.XX				
Pos No	Value	EQ	Value	EQ	C-EQB	C-EQA	Switch-Pos
R 138	220k	3180 µs	330k		0	0	0
R 220 R 221	10K —	90 µs	2k2 —	17,5 µs	0	0	0
R 222 R 223	8k2 47k	70 µs	3k9 56k	35 µs	1	0	2
R 224 R 225	6k8 39k	50 µs	6k8 39k	50 µs	1	1	3
R 226 R 227	3k9 56k	35 µs	8k2 47k	70 µs	0	1	1

0 28.11.91 GP	1 29.3.94 GP	. .	. .	. .
	A 807 GR 41/42			PAGE 5 OF 6
STUDER	AUDIO ELECTRONICS BOARD 2/2 VUK		SC	1.727.472.00
	AUDIO ELECTRONICS BOARD 2/2 VUK HS			1.727.477.00

0 28.11.91 GP	1 29.3.94 GP	. .	. .	. .
	A 807 GR 41/42			PAGE 6 OF 6
STUDER	AUDIO ELECTRONICS BOARD 2/2 VUK		SC	1.727.472.00
	AUDIO ELECTRONICS BOARD 2/2 VUK HS			1.727.477.00

AUDIO ELECTRONICS BOARD 2/2 VUK 1.727.472.00
AUDIO ELECTRONICS BOARD 2/2 VUK HS 1.727.477.00

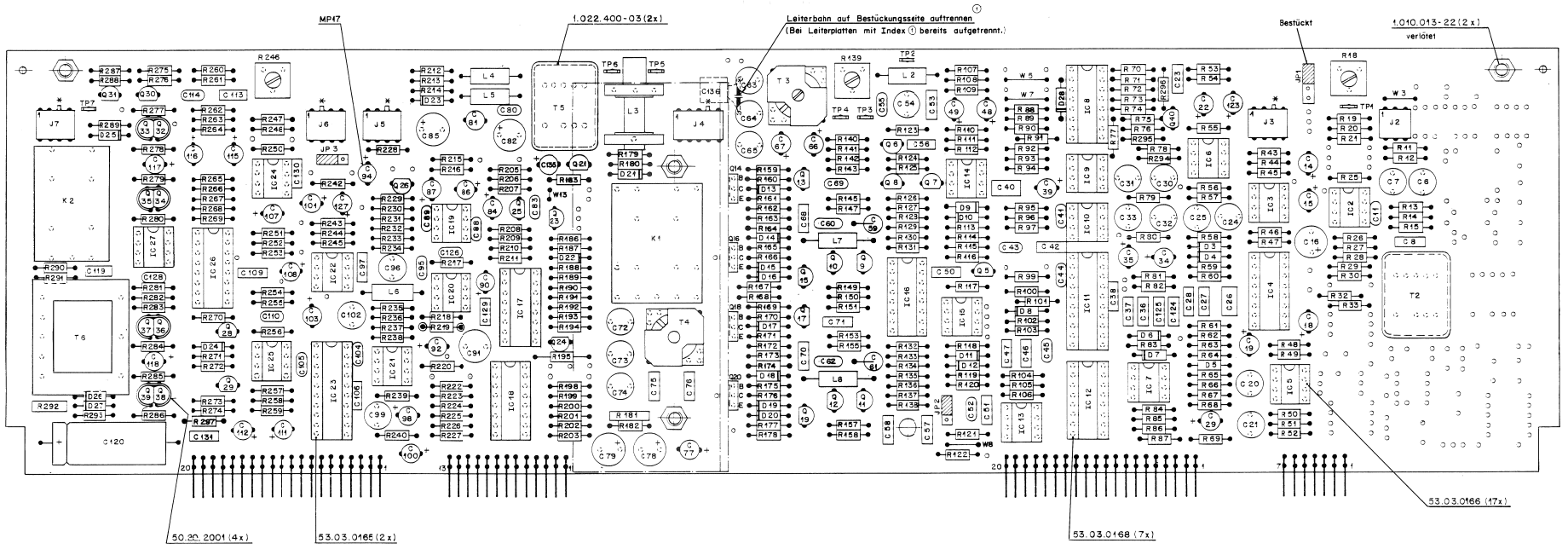

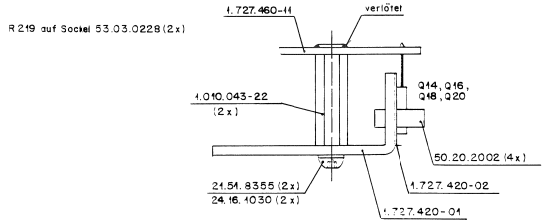

① C 136 neu dazu

* Codierung: Schaltdraht 64.01.0108 ø 0,8 x 8 mm
(muss 1 mm vorstehen)

Schilder 1.727.462-10 / 43.01.0108
aufgeklebt nach Fabrikationsmuster.

R18 INPUT LEVEL ADJUSTMENT
R139 ERASE VOLTAGE ADJUSTMENT
R246 OUTPUT LEVEL ADJUSTMENT
L3 BIAS TRAP
T3 ERASE HEAD CIRCUIT

JP1 INPUT LEVEL SENSITIVITY
JP2 HX PRO: A = ON, B = OFF
JP3 OUTPUT LEVEL SENSITIVITY

TP1 RECORD AMPLIFIER SIGNAL (0.775V = 0VU)
TP2 0.0V
TP3 VOLTAGE ON ERASE HEAD
TP4 PRIMARY CURRENT ON ERASE TRANSFORMER
TP5 BIAS CURRENT ON 10 Ω
TP6 REJECTOR FILTER ADJUSTMENT
TP7 VU METER SIGNAL (0.775V = 0VU)

Änderung					
					③
					②
	29.3.94	[signature]	[signature]		①
Ausgabe	13.12.91	[signature]	[signature]	[signature]	⓪
	Datum	Gez.	Gepr.	Ges.	Index

Kopie für:

STUDER REGENSDORF ZURICH	Bezeichnung: AUDIO-ELECTRONICS BOARD 2/2 VUK ESE	Nummer: 1.727.472-00

AUDIO ELECTRONICS BOARD 2/2 VUK 1.727.472.00

Ad	..POS..	...REF.No...	DESCRIPTION			MANUFACTURER
	C.....6	59.05.1681	680 pF	1%	50V	PP
	C.....7	59.05.1681	680 pF	1%	50V	PP
	C.....8	59.06.0103	10 nF	10%	50V	PETP
	C....11	59.34.4151	150 pF	10%	50V	Cer
	C....14	59.22.3470	47 uF	-20%	10V	EL
	C....15	59.22.3470	47 uF	-20%	10V	EL
	C....16	59.22.2221	220 uF	-20%	6.3V	EL
	C....18	59.22.3470	47 uF	-20%	10V	EL
	C....19	59.22.3470	47 uF	-20%	10V	EL
	C....20	59.05.2102	1 nF	2.5%	50V	PP
	C....21	59.05.2102	1 nF	2.5%	50V	PP
	C....22	59.22.6100	10 uF	-20%	35V	EL
	C....23	59.06.5682	6.8 nF	5%	50V	PETP
	C....24	59.05.2102	1 nF	2.5%	50V	PP
	C....25	59.05.2102	1 nF	2.5%	50V	PP
	C....26	59.06.0103	10 nF	10%	50V	PETP
	C....27	59.06.5104	100 nF	5%	50V	PETP
	C....28	59.06.5104	100 nF	5%	50V	PETP
	C....29	59.22.3470	47 uF	-20%	10V	EL
	C....30	59.05.1332	3.3 nF	1%	50V	PP
	C....31	59.05.1332	3.3 nF	1%	50V	PP
	C....32	59.05.2102	1 nF	2.5%	50V	PP
	C....33	59.05.2102	1 nF	2.5%	50V	PP
	C....34	59.22.8479	4.7 uF	-20%	35V	EL
	C....35	59.22.8479	4.7 uF	-20%	35V	EL
	C....36	59.06.5104	100 nF	5%	50V	PETP
	C....37	59.06.5104	100 nF	5%	50V	PETP
	C....38	59.06.0683	68 nF	10%	50V	PETP
	C....39	59.22.3470	47 uF	-20%	10V	EL
	C....40	59.06.5474	470 nF	5%	50V	PETP
	C....41	59.34.2220	22 pF	10%	50V	Cer
	C....42	59.06.0223	22 nF	10%	50V	PETP
	C....43	59.34.4221	220 pF	5%	50V	Cer
	C....44	59.34.2220	22 pF	10%	50V	Cer
	C....45	59.34.2220	22 pF	10%	50V	Cer
	C....46	59.06.0473	47 nF	10%	50V	PETP
	C....47	59.06.0104	100 nF	10%	50V	PETP
	C....48	59.22.3470	47 uF	-20%	10V	EL
	C....49	59.22.3470	47 uF	-20%	10V	EL
	C....50	59.06.0104	100 nF	10%	50V	PETP
	C....51	59.06.0103	10 nF	10%	50V	PETP
	C....52	59.34.4151	150 pF	5%	50V	Cer
	C....53	59.06.0102	1 nF	10%	50V	PETP
	C....54	59.05.2102	1 nF	2.5%	50V	PP
	C....55	59.34.4680	68 pF	10%	50V	Cer
	C....56	59.06.0102	1 nF	10%	50V	PETP
	C....57	59.06.0103	10 nF	10%	50V	PETP
	C....58	59.06.0103	10 nF	10%	50V	PETP
	C....59	59.12.9102	1nF	1%	50V	PP
	C....60	59.34.4680	68 pF	5%	50V	Cer
	C....61	59.12.9102	1nF	1%	50V	PP
	C....62	59.34.4680	68 pF	5%	50V	Cer
	C....63	59.05.2332	3.3 nF	2.5%	160V	PP
	C....64	59.05.2332	3.3 nF	2.5%	160V	PP
	C....65	59.05.2152	1.5 nF	2.5%	160V	PP
	C....66	59.22.6220	22 uF	-20%	35V	EL
	C....67	59.22.6220	22 uF	-20%	35V	EL
	C....68	59.06.0473	47 nF	10%	50V	PETP
	C....69	59.34.0479	4.7 pF	10%	50V	Cer
	C....70	59.06.0473	47 nF	10%	50V	PETP
	C....71	59.34.0479	4.7 pF	10%	50V	Cer
	C....72	59.05.2471	470 pF	2.5%	630V	PP
	C....73	59.05.1102	1 nF	1%	630V	PP
	C....74	59.05.1681	680 pF	1%	630V	PP
	C....75	59.06.0224	220 nF	10%	50V	PETP
	C....76	59.06.0224	220 nF	10%	50V	PETP
	C....77	59.22.6220	22 uF	-20%	35V	EL
	C....78	59.22.5101	100 uF	-20%	25V	EL
	C....79	59.22.5101	100 uF	-20%	25V	EL
	C....80	59.34.4680	68 pF	10%	50V	Cer
	C....81	59.05.2471	470 pF	2.5%	50V	PP
	C....82	59.22.2221	220 uF	-20%	6.3V	EL
	C....83	59.34.4101	100 pF	10%	50V	Cer
	C....84	59.22.5220	22 uF	-20%	25V	EL
	C....85	59.22.2471	470 uF	-20%	6.3V	EL
	C....86	59.22.5220	22 uF	-20%	25V	EL
	C....87	59.22.5220	22 uF	-20%	25V	EL
	C....88	59.34.4680	68 pF	10%	50V	Cer
	C....89	59.34.4101	100 pF	5%	50V	Cer
	C....90	59.22.3470	47 uF	-20%	10V	EL
	C....91	59.05.1223	22 nF	1%	50V	PP
	C....92	59.26.2100	10 uF	20%	10V	SAL
	C....93	00.00.0000	not used			
	C....94	59.41.5101	100 uF	-20%	25V	EL, with Isolation 50.20.1003
	C....95	59.34.4680	68 pF	10%	50V	Cer
	C....96	59.05.2102	1 nF	2.5%	50V	PP
	C....97	59.06.0153	15 nF	10%	50V	PETP
	C....98	59.22.6100	10 uF	-20%	35V	EL
	C....99	59.05.2332	3.3 nF	2.5%	50V	PP
	C...100	59.22.3470	47 uF	-20%	10V	EL
	C...101	59.22.3470	47 uF	-20%	10V	EL
	C...102	59.05.2103	10 nF	2.5%	50V	PP
	C...103	59.22.6100	10 uF	-20%	35V	EL
	C...104	59.34.2220	22 pF	10%	50V	Cer
	C...105	59.34.2220	22 pF	10%	50V	Cer
	C...106	59.06.0683	68 nF	10%	50V	PETP
	C...107	59.22.3470	47 uF	-20%	10V	EL
	C...108	59.22.3470	47 uF	-20%	10V	EL
	C...109	59.06.0104	100 nF	10%	50V	PETP
	C...110	59.34.5391	390 pF	10%	50V	Cer
	C...111	59.22.3470	47 uF	-20%	10V	EL
	C...112	59.22.3470	47 uF	-20%	10V	EL
	C...113	59.06.0222	2.2 nF	10%	50V	PETP
	C...114	59.34.5471	470 pF	10%	50V	Cer
	C...115	59.22.3470	47 uF	-20%	10V	EL
	C...116	59.22.3101	100 uF	-20%	10V	EL
	C...117	59.22.3470	47 uF	-20%	10V	EL
	C...118	59.22.3470	47 uF	-20%	10V	EL
	C...119	59.06.0153	15 nF	10%	50V	PETP
	C...120	59.25.5471	470 uF	-20%	35V	EL
	C...123	59.22.8479	4.7 uF	-20%	35V	EL
	C...124	59.06.0683	68 nF	10%	50V	PETP
	C...125	59.06.0683	68 nF	10%	50V	PETP
	C...126	59.34.4151	150 pF	10%	50V	Cer
	C...127	59.22.8479	4.7 uF	-20%	35V	EL
	C...128	59.34.4680	68 pF	10%	50V	Cer
	C...129	59.06.5334	330 nF	5%	50V	PETP
	C...130	59.34.4151	150 pF	10%	50V	Cer
	C...131	59.06.0683	68 nF	10%	50V	PETP
	C...135	59.22.3101	100 uF	-20%	10V	EL
01	C...136	59.06.0104	100 nF	10%	50V	PETP
	D.....3	50.04.0125	1N4448		50V	SI
	D.....4	50.04.1102	6.8 V	5%	0.4W	Zener
	D.....5	50.04.1106	2.7 V	5%,	0.4W	Zener
	D.....6	50.04.1112	5.1 V	5%,	0.4W	Zener
	D.....7	50.04.0125	1N4448		50V	SI
	D.....8	50.04.1106	2.7 V	5%,	0.4W	Zener
	D.....9	50.04.0125	1N4448		50V	SI
	D....10	50.04.0125	1N4448		50V	SI
	D....11	50.04.0125	1N4448		50V	SI
	D....12	50.04.0125	1N4448		50V	SI
	D....13	50.04.0125	1N4448		50V	SI
	D....14	50.04.0125	1N4448		50V	SI
	D....15	50.04.0125	1N4448		50V	SI
	D....16	50.04.0125	1N4448		50V	SI
	D....17	50.04.0125	1N4448		50V	SI
	D....18	50.04.0125	1N4448		50V	SI
	D....19	50.04.0125	1N4448		50V	SI
	D....20	50.04.0125	1N4448		50V	SI
	D....21	50.04.0125	1N4448		50V	SI
	D....22	50.04.1121	24 V	5%	0.4W	Zener
	D....23	50.04.0125	1N4448		50V	SI
	D....24	50.04.0125	1N4448		50V	SI
	D....25	50.04.0125	1N4448		50V	SI
	D....26	50.04.0125	1N4448		50V	SI
	D....27	50.04.0125	1N4448		50V	SI
	D....28	50.04.1114	10 V	5%	0.4W	Zener
	IC....2	50.09.0105	NE 5532 N	Dual Op. Amp.		Sig
	IC....3	50.09.0105	NE 5532 N	Dual Op. Amp.		Sig
	IC....4	50.07.0015	MC 14053	CMOS Analog Switch		Mot
	IC....5	50.09.0105	NE 5532 N	Dual Op. Amp.		Sig
	IC....6	50.09.0107	RC 4559	Dual Op. Amp.		Ra
	IC....7	50.09.0107	RC 4559	Dual Op. Amp.		Ra
	IC....8	50.07.0024	MC 14052	CMOS Analog Switch		Mot
	IC....9	50.09.0107	RC 4559	Dual Op. Amp.		Ra
	IC...10	50.09.0107	RC 4559	Dual Op. Amp.		Ra
	IC...11	50.07.0026	AD 7528JN	Dual 8-bit D/A Converter		ADI
	IC...12	50.07.0002	AD 7524JN	8-bit D/A Converter		ADI
	IC...13	50.09.0107	RC 4559	Dual Op. Amp.		Ra
	IC...14	50.09.0107	RC 4559	Dual Op. Amp.		Ra
	IC...15	50.09.0101	LF 353	Dual Op. Amp.		NS
	IC...16	50.09.0112	LM 13700	Dual OTA		NS
	IC...17	50.07.0015	MC 14053	CMOS Analog Switch		Mot
	IC...18	50.07.0024	MC 14052	CMOS Analog Switch		Mot
	IC...19	50.09.0107	RC 4559	Dual Op. Amp.		Ra
	IC...20	50.09.0107	RC 4559	Dual Op. Amp.		Ra
	IC...21	50.09.0107	RC 4559	Dual Op. Amp.		Ra
	IC...22	50.09.0105	NE 5532 N	Dual Op. Amp.		Sig
	IC...23	50.07.0026	AD 7528JN	Dual 8-bit D/A Converter		ADI
	IC...24	50.09.0105	NE 5532 N	Dual Op. Amp.		Sig
	IC...25	50.09.0107	RC 4559	Dual Op. Amp.		Ra
	IC...26	50.07.0015	MC 14053	CMOS Analog Switch		Mot
	IC...27	50.09.0105	NE 5532 N	Dual Op. Amp.		Sig
	J.....2	54.01.0249	3-Pole	CIS Socket Strip		AMP
	J.....3	54.01.0304	4-Pole	CIS Socket Strip		AMP
	J.....4	54.01.0305	5-Pole	CIS Socket Strip		AMP
	J.....5	54.01.0304	4-Pole	CIS Socket Strip		AMP
	J.....6	54.01.0304	4-Pole	CIS Socket Strip		AMP
	J.....7	54.01.0304	4-Pole	CIS Socket Strip		AMP
	JP....1	54.01.0021		Bridge		
	JP....2	54.01.0021		Bridge		
	JP....3	54.01.0021		Bridge		
	K.....1	56.04.0144	4*U	Relay, 24V, 1200 Ohm		
	K.....2	56.04.0143	2*U	Relay, 24V, 2000 Ohm		
	L.....2	62.01.0128	1mH			
	L.....3	1.177.231.00	2.4mH			St
	L.....4	62.01.0128	1mH			
	L.....5	62.01.0128	1mH			
	L.....6	62.01.0128	1mH			
	L.....7	62.01.0128	1mH			
	L.....8	62.01.0128	1mH			

AUDIO ELECTRONICS BOARD 2/2 VUK 1.727.472.00

Ad	..POS..	...REF.No...	DESCRIPTION			MANUFACTURER
	MP....1	54.01.0020	4 pcs	Contact Pin JP1		
	MP....2	54.01.0020	3 pcs	Contact Pin JP2		
	MP....3	54.01.0020	3 pcs	Contact Pin JP3		
	MP....4	1.010.043.22	2 pcs	Rivet Nut M3*20		
	MP....5	21.51.8355	2 pcs	Screw M3*8		
	MP....6	24.16.1030	2 pcs	Washer		
	MP....7	50.20.2001	4 pcs	Clip, 2*TO92		
	MP....8	1.727.420.01	1 pce	Heatsink		St
	MP....9	1.727.420.02	1 pce	Thermoplastic		St
	MP...10	1.727.472.10	1 pce	No. Label		St
	MP...11	1.727.460.11	1 pce	Audio Electronics PCB		St
	MP...12	1.022.400.03	2 pcs	Isolation T2,T3		St
	MP...13	1.010.013.22	2 pcs	Rivet Nut M3*3		
	MP...14	50.20.2002	4 pcs	Clip, TO126		
	MP...15	43.01.0108	1 pce	ESE Warning Label		
	MP...16	53.03.0228	2 pcs	1-Pole Socket (R219)		
	MP...17	50.20.1003	1 pce	Isolation for C94		
	P.....1	54.01.0223	7-Pole	CIS Pin Strip		
	P.....2	54.01.0261	20-Pole	CIS Pin Strip		
	P.....3	54.01.0273	13-Pole	CIS Pin Strip		
	P.....4	54.01.0261	20-Pole	CIS Pin Strip		
	Q.....4	00.00.0000		not used		
	Q.....5	50.03.0515	BC307B	BC557B, BC560B	PNP	
	Q.....6	50.03.0350	J112		FET	Mot
	Q.....7	50.03.0436	BC237B	BC547B, BC550B	NPN	
	Q.....8	50.03.0515	BC307B	BC557B, BC560B	PNP	
	Q.....9	50.03.0436	BC237B	BC547B, BC550B	NPN	
	Q....10	50.03.0436	BC237B	BC547B, BC550B	NPN	
	Q....11	50.03.0436	BC237B	BC547B, BC550B	NPN	
	Q....12	50.03.0436	BC237B	BC547B, BC550B	NPN	
	Q....13	50.03.0515	BC307B	BC557B, BC560B	PNP	
	Q....14	50.03.0495	BD135-16		NPN	
	Q....15	50.03.0436	BC237B	BC547B, BC550B	NPN	
	Q....16	50.03.0510	BD136-16		PNP	
	Q....17	50.03.0515	BC307B	BC557B, BC560B	PNP	
	Q....18	50.03.0495	BD135-16		NPN	
	Q....19	50.03.0436	BC237B	BC547B, BC550B	NPN	
	Q....20	50.03.0510	BD136-16		PNP	
	Q....21	50.03.0350	J112		FET	Mot
	Q....22	00.00.0000		not used		
	Q....23	50.03.0515	BC307B	BC557B, BC560B	PNP	
	Q....24	50.03.0329	WP146		FET	Mot
	Q....25	50.03.0625	BC327		PNP	
	Q....26	50.03.0625	BC327		PNP	
	Q....28	50.03.0340	BC337-25		NPN	
	Q....29	50.03.0515	BC307B	BC557B, BC560B	NPN	
	Q....30	50.03.0436	BC237B	BC547B, BC550B	NPN	
	Q....31	50.03.0515	BC307B	BC557B, BC560B	NPN	
	Q....32	50.03.0516	BC337	matched with Q33,	NPN	
	Q....33	50.03.0516	BC337	matched with Q32,	NPN	
	Q....34	50.03.0625	BC327	matched with Q35,	PNP	
	Q....35	50.03.0625	BC327	matched with Q34,	PNP	
	Q....36	50.03.0516	BC337	matched with Q37,	NPN	
	Q....37	50.03.0516	BC337	matched with Q36,	NPN	
	Q....38	50.03.0625	BC327	matched with Q39,	PNP	
	Q....39	50.03.0625	BC327	matched with Q38,	PNP	
	Q....40	50.03.0350	J112		FET	Mot
	R....11	57.11.3152	1.5 kOhm	2%, 0.25W, MF		
	R....12	57.11.3152	1.5 kOhm	2%, 0.25W, MF		
	R....13	57.11.3392	3.9 kOhm	2%, 0.25W, MF		
	R....14	57.11.3392	3.9 kOhm	2%, 0.25W, MF		
	R....15	57.11.3182	1.8 kOhm	2%, 0.25W, MF		
	R....18	58.01.8502	5 kOhm	10%, 0.5 W, PMG		
	R....19	57.11.3821	820 Ohm	2%, 0.25W, MF		
	R....20	57.11.3123	12 kOhm	2%, 0.25W, MF		
	R....21	57.11.3222	2.2 kOhm	2%, 0.25W, MF		
	R....22	00.00.0000		not used		
	R....23	00.00.0000		not used		
	R....24	00.00.0000		not used		
	R....25	57.11.3433	43 kOhm	2%, 0.25W, MF		
	R....26	57.11.3392	3.9 kOhm	2%, 0.25W, MF		
	R....27	57.11.3432	4.3 kOhm	2%, 0.25W, MF		
	R....28	57.11.3101	100 Ohm	2%, 0.25W, MF		
	R....29	57.11.3682	6.8 kOhm	2%, 0.25W, MF		
	R....30	57.11.3103	10 kOhm	2%, 0.25W, MF		
	R....32	57.11.3682	6.8 kOhm	2%, 0.25W, MF		
	R....33	57.11.3103	10 kOhm	2%, 0.25W, MF		
	R....43	57.11.3473	47 kOhm	2%, 0.25W, MF		
	R....44	57.11.3102	1 kOhm	2%, 0.25W, MF		
	R....45	57.11.3222	2.2 kOhm	2%, 0.25W, MF		
	R....46	57.11.3472	4.7 kOhm	2%, 0.25W, MF		
	R....47	57.11.3472	4.7 kOhm	2%, 0.25W, MF		
	R....48	57.11.3473	47 kOhm	2%, 0.25W, MF		
	R....49	57.11.3472	4.7 kOhm	2%, 0.25W, MF		
	R....50	57.11.3132	1.3 kOhm	2%, 0.25W, MF		
	R....51	57.11.3472	4.7 kOhm	2%, 0.25W, MF		
	R....52	57.11.3473	47 kOhm	2%, 0.25W, MF		
	R....53	57.11.3682	6.8 kOhm	2%, 0.25W, MF		
	R....54	57.11.3472	4.7 kOhm	2%, 0.25W, MF		
	R....55	57.11.3333	33 kOhm	2%, 0.25W, MF		
	R....56	57.11.3472	4.7 kOhm	2%, 0.25W, MF		
	R....57	57.11.3272	2.7 kOhm	2%, 0.25W, MF		
	R....58	57.11.3272	2.7 kOhm	2%, 0.25W, MF		
	R....59	57.11.3223	22 kOhm	2%, 0.25W, MF		
	R....60	00.00.0000		not used		
	R....61	57.11.3152	1.5 kOhm	2%, 0.25W, MF		
	R....62	57.11.3103	10 kOhm	2%, 0.25W, MF		
	R....63	57.11.3154	150 kOhm	2%, 0.25W, MF		
	R....64	57.11.3102	1 kOhm	2%, 0.25W, MF		
	R....65	57.11.3332	3.3 kOhm	2%, 0.25W, MF		
	R....66	57.11.3273	27 kOhm	2%, 0.25W, MF		
	R....67	57.11.3302	3 kOhm	2%, 0.25W, MF		
	R....68	57.11.3302	3 kOhm	2%, 0.25W, MF		
	R....69	57.11.3473	47 kOhm	2%, 0.25W, MF		
	R....70	57.11.3472	4.7 kOhm	2%, 0.25W, MF		
	R....71	00.00.0000		not used		
	R....72	57.11.3682	6.8 kOhm	2%, 0.25W, MF		
	R....73	57.11.3473	47 kOhm	2%, 0.25W, MF		
	R....74	57.11.3472	4.7 kOhm	2%, 0.25W, MF		
	R....75	00.00.0000		not used		
	R....76	57.11.3562	5.6 kOhm	2%, 0.25W, MF		
	R....77	00.00.0000		not used		
	R....78	57.11.3103	10 kOhm	2%, 0.25W, MF		
	R....79	57.11.3472	4.7 kOhm	2%, 0.25W, MF		
	R....80	57.11.3681	680 Ohm	2%, 0.25W, MF		
	R....81	57.11.3473	47 kOhm	2%, 0.25W, MF		
	R....82	00.00.0000		not used		
	R....83	57.11.3152	1.5 kOhm	2%, 0.25W, MF		
	R....84	57.11.3154	150 kOhm	2%, 0.25W, MF		
	R....85	57.11.3102	1 kOhm	2%, 0.25W, MF		
	R....86	57.11.3103	10 kOhm	2%, 0.25W, MF		
	R....87	57.11.3273	27 kOhm	2%, 0.25W, MF		
	R....88	57.11.3103	10 kOhm	2%, 0.25W, MF		
	R....89	57.11.3682	6.8 kOhm	2%, 0.25W, MF		
	R....90	57.11.3103	10 kOhm	2%, 0.25W, MF		
	R....91	57.11.3682	6.8 kOhm	2%, 0.25W, MF		
	R....92	57.11.3683	68 kOhm	2%, 0.25W, MF		
	R....93	57.11.3752	7.5 kOhm	2%, 0.25W, MF		
	R....94	57.11.3562	5.6 kOhm	2%, 0.25W, MF		
	R....95	57.11.3101	100 Ohm	2%, 0.25W, MF		
	R....96	57.11.3432	4.3 kOhm	2%, 0.25W, MF		
	R....97	57.11.3432	4.3 kOhm	2%, 0.25W, MF		
	R....98	00.00.0000		not used		
	R....99	57.11.3472	4.7 kOhm	2%, 0.25W, MF		
	R...100	57.11.3333	33 kOhm	2%, 0.25W, MF		
	R...101	57.11.3103	10 kOhm	2%, 0.25W, MF		
	R...102	57.11.5335	3.3 MOhm	5%, 0.25W, MF		
	R...103	57.11.3472	4.7 kOhm	2%, 0.25W, MF		
	R...104	57.11.3102	1 kOhm	2%, 0.25W, MF		
	R...105	57.11.3391	390 Ohm	2%, 0.25W, MF		
	R...106	57.11.3102	1 kOhm	2%, 0.25W, MF		
	R...107	57.11.3822	8.2 kOhm	2%, 0.25W, MF		
	R...108	57.11.3182	1.8 kOhm	2%, 0.25W, MF		
	R...109	57.11.3151	150 Ohm	2%, 0.25W, MF		
	R...110	57.11.3562	5.6 kOhm	2%, 0.25W, MF		
	R...111	57.11.3823	82 kOhm	2%, 0.25W, MF		
	R...112	57.11.3132	1.3 kOhm	2%, 0.25W, MF		
	R...113	57.11.3223	22 kOhm	2%, 0.25W, MF		
	R...114	57.11.3274	270 kOhm	2%, 0.25W, MF		
	R...115	57.11.3223	22 kOhm	2%, 0.25W, MF		
	R...116	57.11.3223	22 kOhm	2%, 0.25W, MF		
	R...117	57.11.3223	22 kOhm	2%, 0.25W, MF		
	R...118	57.11.3223	22 kOhm	2%, 0.25W, MF		
	R...119	57.11.3102	1 kOhm	2%, 0.25W, MF		
	R...120	57.11.3104	100 kOhm	2%, 0.25W, MF		
	R...121	57.11.3682	6.8 kOhm	2%, 0.25W, MF		
	R...122	57.11.3154	150 kOhm	2%, 0.25W, MF		
	R...123	57.11.3471	470 Ohm	2%, 0.25W, MF		
	R...124	57.11.5106	10 MOhm	5%, 0.25W, MF		
	R...125	57.11.5106	10 MOhm	5%, 0.25W, MF		
	R...126	57.11.3103	10 kOhm	2%, 0.25W, MF		
	R...127	57.11.3472	4.7 kOhm	2%, 0.25W, MF		
	R...128	57.11.3472	4.7 kOhm	2%, 0.25W, MF		
	R...129	57.11.3103	10 kOhm	2%, 0.25W, MF		
	R...130	57.11.3153	15 kOhm	2%, 0.25W, MF		
	R...131	57.11.3153	15 kOhm	2%, 0.25W, MF		
	R...132	57.11.3103	10 kOhm	2%, 0.25W, MF		
	R...133	57.11.3221	220 Ohm	2%, 0.25W, MF		
	R...134	57.11.3221	220 Ohm	2%, 0.25W, MF		
	R...135	57.11.3221	220 Ohm	2%, 0.25W, MF		
	R...136	57.11.3221	220 Ohm	2%, 0.25W, MF		
	R...137	57.11.3682	6.8 kOhm	2%, 0.25W, MF		
	R...138	57.11.3472	4.7 kOhm	2%, 0.25W, MF		
	R...139	58.01.8502	5 kOhm	10%, 0.5 W, PMG		
	R...140	57.11.3229	2.2 Ohm	2%, 0.25W, MF		
	R...141	57.11.3301	300 Ohm	2%, 0.25W, MF		
	R...142	57.11.3152	1.5 kOhm	2%, 0.25W, MF		
	R...143	57.11.3332	3.3 kOhm	2%, 0.25W, MF		
	R...145	57.11.3332	3.3 kOhm	2%, 0.25W, MF		
	R...147	57.11.3471	470 Ohm	2%, 0.25W, MF		
	R...149	57.11.3220	22 Ohm	2%, 0.25W, MF		
	R...150	57.11.3220	22 Ohm	2%, 0.25W, MF		
	R...151	57.11.3332	3.3 kOhm	2%, 0.25W, MF		
	R...153	57.11.3332	3.3 kOhm	2%, 0.25W, MF		
	R...155	57.11.3471	470 Ohm	2%, 0.25W, MF		
	R...157	57.11.3220	22 Ohm	2%, 0.25W, MF		
	R...158	57.11.3220	22 Ohm	2%, 0.25W, MF		
	R...159	57.11.3470	47 Ohm	2%, 0.25W, MF		
	R...160	57.11.3229	2.2 Ohm	2%, 0.25W, MF		
	R...161	57.11.3470	47 Ohm	2%, 0.25W, MF		

AUDIO ELECTRONICS BOARD 2/2 VUK 1.727.472.00

Ad	..POS..	...REF.No...	DESCRIPTION	MANUFACTURER
	R...162	57.11.3472	4.7 kOhm 2%, 0.25W, MF	
	R...163	57.11.3229	2.2 Ohm 2%, 0.25W, MF	
	R...164	57.11.3102	1 kOhm 2%, 0.25W, MF	
	R...165	57.11.3470	47 Ohm 2%, 0.25W, MF	
	R...166	57.11.3472	4.7 kOhm 2%, 0.25W, MF	
	R...167	57.11.3680	68 Ohm 2%, 0.25W, MF	
	R...168	57.11.3682	6.8 kOhm 2%, 0.25W, MF	
	R...169	57.11.3470	47 Ohm 2%, 0.25W, MF	
	R...170	57.11.3229	2.2 Ohm 2%, 0.25W, MF	
	R...171	57.11.3470	47 Ohm 2%, 0.25W, MF	
	R...172	57.11.3472	4.7 kOhm 2%, 0.25W, MF	
	R...173	57.11.3229	2.2 Ohm 2%, 0.25W, MF	
	R...174	57.11.3102	1 kOhm 2%, 0.25W, MF	
	R...175	57.11.3470	47 Ohm 2%, 0.25W, MF	
	R...176	57.11.3472	4.7 kOhm 2%, 0.25W, MF	
	R...177	57.11.3680	68 Ohm 2%, 0.25W, MF	
	R...178	57.11.3682	6.8 kOhm 2%, 0.25W, MF	
	R...179	57.11.3473	47 kOhm 2%, 0.25W, MF	
	R...180	57.11.3100	10 Ohm 2%, 0.25W, MF	
	R...181	57.99.0209	5.6 Ohm PTC	
	R...182	57.11.3569	5.6 Ohm 2%, 0.25W, MF	
	R...183	57.11.3105	1 MOhm 2%, 0.25W, MF	
	R...184	00.00.0000	not used	
	R...185	00.00.0000	not used	
	R...186	57.11.3222	2.2 kOhm 2%, 0.25W, MF	
	R...187	57.11.3222	2.2 kOhm 2%, 0.25W, MF	
	R...188	57.11.3103	10 kOhm 2%, 0.25W, MF	
	R...189	57.11.3682	6.8 kOhm 2%, 0.25W, MF	
	R...190	57.11.3682	6.8 kOhm 2%, 0.25W, MF	
	R...191	57.11.3223	22 kOhm 2%, 0.25W, MF	
	R...192	57.11.3682	6.8 kOhm 2%, 0.25W, MF	
	R...193	57.11.3103	10 kOhm 2%, 0.25W, MF	
	R...194	57.11.3105	1 MOhm 2%, 0.25W, MF	
	R...195	57.11.3681	680 Ohm 2%, 0.25W, MF	
	R...196	00.00.0000	not used	
	R...197	00.00.0000	not used	
	R...198	57.11.3224	220 kOhm 2%, 0.25W, MF	
	R...199	57.11.3224	220 kOhm 2%, 0.25W, MF	
	R...200	57.11.3103	10 kOhm 2%, 0.25W, MF	
	R...201	57.11.3682	6.8 kOhm 2%, 0.25W, MF	
	R...202	57.11.3682	6.8 kOhm 2%, 0.25W, MF	
	R...203	57.11.3103	10 kOhm 2%, 0.25W, MF	
	R...204	00.00.0000	not used	
	R...205	57.11.3181	180 Ohm 2%, 0.25W, MF	
	R...206	57.11.3562	5.6 kOhm 2%, 0.25W, MF	
	R...207	57.11.3104	100 kOhm 2%, 0.25W, MF	
	R...208	57.11.3683	68 kOhm 2%, 0.25W, MF	
	R...209	57.11.3333	33 kOhm 2%, 0.25W, MF	
	R...210	57.11.3333	33 kOhm 2%, 0.25W, MF	
	R...211	57.11.3103	10 kOhm 2%, 0.25W, MF	
	R...212	57.11.3120	12 Ohm 2%, 0.25W, MF	
	R...213	57.11.3560	56 Ohm 2%, 0.25W, MF	
	R...214	57.11.3101	100 Ohm 2%, 0.25W, MF	
	R...215	57.11.3682	6.8 kOhm 2%, 0.25W, MF	
	R...216	57.11.3682	6.8 kOhm 2%, 0.25W, MF	
	R...217	57.11.3682	6.8 kOhm 2%, 0.25W, MF	
	R...218	57.11.3394	390 kOhm 5%, 0.25W, MF	
	R...219	57.11.3104	100 kOhm 2%, 0.25W, MF, with socket	
	R...220	57.11.3103	10 kOhm 2%, 0.25W, MF	
	R...221	00.00.0000	not used	
	R...222	57.11.3822	8.2 kOhm 2%, 0.25W, MF	
	R...223	57.11.3473	47 kOhm 2%, 0.25W, MF	
	R...224	57.11.3682	6.8 kOhm 2%, 0.25W, MF	
	R...225	57.11.3393	39 kOhm 2%, 0.25W, MF	
	R...226	57.11.3392	3.9 kOhm 2%, 0.25W, MF	
	R...227	57.11.3563	56 kOhm 2%, 0.25W, MF	
	R...228	57.11.3333	33 kOhm 2%, 0.25W, MF	
	R...229	57.11.3562	5.6 kOhm 2%, 0.25W, MF	
	R...230	57.11.3683	68 kOhm 2%, 0.25W, MF	
	R...231	57.11.3562	5.6 kOhm 2%, 0.25W, MF	
	R...232	57.11.3333	33 kOhm 2%, 0.25W, MF	
	R...233	57.11.3103	10 kOhm 2%, 0.25W, MF	
	R...234	57.11.3271	270 Ohm 2 % 0.25W, MF	
	R...235	57.11.3273	27 kOhm 2%, 0.25W, MF	
	R...236	57.11.3152	1.5 kOhm 2%, 0.25W, MF	
	R...237	57.11.3331	330 Ohm 2%, 0.25W, MF	
	R...238	57.11.3103	10 kOhm 2%, 0.25W, MF	
	R...239	57.11.3103	10 kOhm 2%, 0.25W, MF	
	R...240	57.11.3102	1 kOhm 2%, 0.25W, MF	
	R...241	00.00.0000	not used	
	R...242	57.11.3472	4.7 kOhm 2%, 0.25W, MF	
	R...243	57.11.3473	47 kOhm 2%, 0.25W, MF	
	R...244	57.11.3102	1 kOhm 2%, 0.25W, MF	
	R...245	57.11.3222	2.2 kOhm 2%, 0.25W, MF	
	R...246	58.01.8502	5 kOhm 10%, 0.5 W, PMG	
	R...247	57.11.3821	820 Ohm 2%, 0.25W, MF	
	R...248	57.11.3392	3.9 kOhm 2%, 0.25W, MF	
	R...249	00.00.0000	not used	
	R...250	57.11.3153	15 kOhm 2%, 0.25W, MF	
	R...251	57.11.3473	47 kOhm 2%, 0.25W, MF	
	R...252	57.11.3472	4.7 kOhm 2%, 0.25W, MF	
	R...253	57.11.3472	4.7 kOhm 2%, 0.25W, MF	
	R...254	57.11.3331	330 Ohm 2%, 0.25W, MF	
	R...255	57.11.3102	1 kOhm 2%, 0.25W, MF	
	R...256	57.11.3273	27 kOhm 2%, 0.25W, MF	
	R...257	57.11.3102	1 kOhm 2%, 0.25W, MF	
	R...258	57.11.3471	470 Ohm 2%, 0.25W, MF	
	R...259	57.11.3103	10 kOhm 2%, 0.25W, MF	
	R...260	57.11.3221	220 Ohm 2%, 0.25W, MF	
	R...261	57.11.3122	1.2 kOhm 2%, 0.25W, MF	
	R...262	57.11.3471	470 Ohm 2%, 0.25W, MF	
	R...263	57.11.3223	22 kOhm 2%, 0.25W, MF	
	R...264	57.11.3222	2.2 kOhm 2%, 0.25W, MF	
	R...265	57.11.3473	47 kOhm 2%, 0.25W, MF	
	R...266	57.11.3103	10 kOhm 2%, 0.25W, MF	
	R...267	57.11.3682	6.8 kOhm 2%, 0.25W, MF	
	R...268	57.11.3682	6.8 kOhm 2%, 0.25W, MF	
	R...269	57.11.3103	10 kOhm 2%, 0.25W, MF	
	R...270	57.11.3472	4.7 kOhm 2%, 0.25W, MF	
	R...271	57.11.3122	1.2 kOhm 2%, 0.25W, MF	
	R...272	57.11.3223	22 kOhm 2%, 0.25W, MF	
	R...273	57.11.3223	22 kOhm 2%, 0.25W, MF	
	R...274	57.11.3473	47 kOhm 2%, 0.25W, MF	
	R...275	57.11.3223	22 kOhm 2%, 0.25W, MF	
	R...276	57.11.3103	10 kOhm 2%, 0.25W, MF	
	R...277	57.11.3339	3.3 Ohm 2%, 0.25W, MF	
	R...278	57.11.3103	10 kOhm 2%, 0.25W, MF	
	R...279	57.11.3103	10 kOhm 2%, 0.25W, MF	
	R...280	57.11.3339	3.3 Ohm 2%, 0.25W, MF	
	R...281	57.11.3222	2.2 kOhm 2%, 0.25W, MF	
	R...282	57.11.3222	2.2 kOhm 2%, 0.25W, MF	
	R...283	57.11.3339	3.3 Ohm 2%, 0.25W, MF	
	R...284	57.11.3103	10 kOhm 2%, 0.25W, MF	
	R...285	57.11.3103	10 kOhm 2%, 0.25W, MF	
	R...286	57.11.3339	3.3 Ohm 2%, 0.25W, MF	
	R...287	57.11.3472	4.7 kOhm 2%, 0.25W, MF	
	R...288	57.11.3103	10 kOhm 2%, 0.25W, MF	
	R...289	57.11.3471	470 Ohm 2%, 0.25W, MF	
	R...290	57.11.3391	390 Ohm 2%, 0.25W, MF	
	R...291	57.11.3152	1.5 kOhm 2%, 0.25W, MF	
	R...292	57.92.1151	18 Ohm 150mA, PTC	
	R...293	57.11.3180	18 Ohm 2%, 0.25W, MF	
	R...294	57.11.3470	47 Ohm 2%, 0.25W, MF	
	R...295	57.11.3223	22 kOhm 2%, 0.25W, MF	
	R...296	57.11.3105	1 MOhm 2%, 0.25W, MF	
	R...297	57.11.3472	4.7 kOhm 2%, 0.25W, MF	
	T.....2	1.022.451.00	1:0.62 Line Input Trafo	St
	T.....3	1.022.271.00	Erase Trafo	St
	T.....4	1.022.272.00	Bias Trafo	St
	T.....5	1.022.402.00	1:10 Sync Trafo	St
	T.....6	1.022.355.00	Line Output Trafo	St
	TP....1	54.02.0320	Plug 2.8*0.8	AMP
	TP....2	54.02.0320	Plug 2.8*0.8	AMP
	TP....3	54.02.0320	Plug 2.8*0.8	AMP
	TP....4	54.02.0320	Plug 2.8*0.8	AMP
	TP....5	54.02.0320	Plug 2.8*0.8	AMP
	TP....6	54.02.0320	Plug 2.8*0.8	AMP
	TP....7	54.02.0320	Plug 2.8*0.8	AMP
	W.....3	64.01.0106	Wire Bridge	
	W.....4	00.00.0000	not used	
	W.....5	64.01.0106	Wire Bridge	
	W.....6	00.00.0000	not used	
	W.....7	64.01.0106	Wire Bridge	
	W.....8	64.01.0106	Wire Bridge	
	W....13	1.010.329.64	Wire Bridge	
	XIC...2	53.03.0166	8-Pole IC Socket	
	XIC...3	53.03.0166	8-Pole IC Socket	
	XIC...4	53.03.0168	16-Pole IC Socket	
	XIC...5	53.03.0166	8-Pole IC Socket	
	XIC...6	53.03.0166	8-Pole IC Socket	
	XIC...7	53.03.0166	8-Pole IC Socket	
	XIC...8	53.03.0168	16-Pole IC Socket	
	XIC...9	53.03.0166	8-Pole IC Socket	
	XIC..10	53.03.0166	8-Pole IC Socket	
	XIC..11	53.03.0165	20-Pole IC Socket	
	XIC..12	53.03.0168	16-Pole IC Socket	
	XIC..13	53.03.0166	8-Pole IC Socket	
	XIC..14	53.03.0166	8-Pole IC Socket	
	XIC..15	53.03.0166	8-Pole IC Socket	
	XIC..16	53.03.0168	16-Pole IC Socket	
	XIC..17	53.03.0168	16-Pole IC Socket	
	XIC..18	53.03.0168	16-Pole IC Socket	
	XIC..19	53.03.0166	8-Pole IC Socket	
	XIC..20	53.03.0166	8-Pole IC Socket	
	XIC..21	53.03.0166	8-Pole IC Socket	
	XIC..22	53.03.0166	8-Pole IC Socket	
	XIC..23	53.03.0165	20-Pole IC Socket	
	XIC..24	53.03.0166	8-Pole IC Socket	
	XIC..25	53.03.0166	8-Pole IC Socket	
	XIC..26	53.03.0168	16-Pole IC Socket	
	XIC..27	53.03.0166	8-Pole IC Socket	

Cer = Ceramic EL = Electrolytic PETP = Polyester
PP = Polypropylen MF = Metal Film SI = Silicon
SAL = Solid Aluminium
MANUFACTURER: ADI = Analog Devices Inc. Mot = Motorola
NS = National Semiconductors Ra = Raytheon
Sig = Signetics St = Studer

1.727.472.00 AUDIO ELECTRONICS BOARD 2/2VU K GP91/11/2800

1.727.472.00 AUDIO ELECTRONICS BOARD 2/2VU K GP94/03/2901

END →

AUDIO ELECTRONICS BOARD 2/2 VUK HS 1.727.477.00

Ad	..POS..	...REF.No...	DESCRIPTION				MANUFACTURER
	C.....6	59.05.1681	680 pF	1%	50V	PP	
	C.....7	59.05.1681	680 pF	1%	50V	PP	
	C.....8	59.06.0103	10 nF	10%	50V	PETP	
	C.....11	59.34.4151	150 pF	10%	50V	Cer	
	C.....14	59.22.3470	47 uF	-20%	10V	EL	
	C.....15	59.22.3470	47 uF	-20%	10V	EL	
	C.....16	59.22.2221	220 uF	-20%	6.3V	EL	
	C.....18	59.22.3470	47 uF	-20%	10V	EL	
	C.....19	59.22.3470	47 uF	-20%	10V	EL	
	C.....20	59.05.2102	1 nF	2.5%	50V	PP	
	C.....21	59.05.2102	1 nF	2.5%	50V	PP	
	C.....22	59.22.6100	10 uF	-20%	35V	EL	
	C.....23	59.06.5682	6.8 nF	5%	50V	PETP	
	C.....24	59.05.2102	1 nF	2.5%	50V	PP	
	C.....25	59.05.2102	1 nF	2.5%	50V	PP	
	C.....26	59.06.0103	10 nF	10%	50V	PETP	
	C.....27	59.06.5104	100 nF	5%	50V	PETP	
	C.....28	59.06.5104	100 nF	5%	50V	PETP	
	C.....29	59.22.3470	47 uF	-20%	10V	EL	
	C.....30	59.05.1332	3.3 nF	1%	50V	PP	
	C.....31	59.05.1332	3.3 nF	1%	50V	PP	
	C.....32	59.05.2102	1 nF	2.5%	50V	PP	
	C.....33	59.05.2102	1 nF	2.5%	50V	PP	
	C.....34	59.22.8479	4.7 uF	-20%	35V	EL	
	C.....35	59.22.8479	4.7 uF	-20%	35V	EL	
	C.....36	59.06.5104	100 nF	5%	50V	PETP	
	C.....37	59.06.5104	100 nF	5%	50V	PETP	
	C.....38	59.06.0683	68 nF	10%	50V	PETP	
	C.....39	59.22.3470	47 uF	-20%	10V	EL	
	C.....40	59.06.5474	470 nF	5%	50V	PETP	
	C.....41	59.34.2220	22 pF	10%	50V	Cer	
	C.....42	59.06.0223	22 nF	10%	50V	PETP	
	C.....43	59.34.4221	220 pF	5%	50V	Cer	
	C.....44	59.34.2220	22 pF	10%	50V	Cer	
	C.....45	59.34.2220	22 pF	10%	50V	Cer	
	C.....46	59.06.0473	47 nF	10%	50V	PETP	
	C.....47	59.06.0104	100 nF	10%	50V	PETP	
	C.....48	59.22.3470	47 uF	-20%	10V	EL	
	C.....49	59.22.3470	47 uF	-20%	10V	EL	
	C.....50	59.06.0104	100 nF	10%	50V	PETP	
	C.....51	59.06.0103	10 nF	10%	50V	PETP	
	C.....52	59.34.4151	150 pF	5%	50V	Cer	
	C.....53	59.06.0102	1 nF	10%	50V	PETP	
	C.....54	59.05.2102	1 nF	2.5%	50V	PP	
	C.....55	59.34.4680	68 pF	10%	50V	Cer	
	C.....56	59.06.0102	1 nF	10%	50V	PETP	
	C.....57	59.06.0103	10 nF	10%	50V	PETP	
	C.....58	59.06.0103	10 nF	10%	50V	PETP	
	C.....59	59.12.9102	1nF	1%	50V	PP	
	C.....60	59.34.4680	68 pF	5%	50V	Cer	
	C.....61	59.12.9102	1nF	1%	50V	PP	
	C.....62	59.34.4680	68 pF	5%	50V	Cer	
	C.....63	59.05.2332	3.3 nF	2.5%	160V	PP	
	C.....64	59.05.2332	3.3 nF	2.5%	160V	PP	
	C.....65	59.05.2152	1.5 nF	2.5%	160V	PP	
	C.....66	59.22.6220	22 uF	-20%	35V	EL	
	C.....67	59.22.6220	22 uF	-20%	35V	EL	
	C.....68	59.06.0473	47 nF	10%	50V	PETP	
	C.....69	59.34.0479	4.7 pF	10%	50V	Cer	
	C.....70	59.06.0473	47 nF	10%	50V	PETP	
	C.....71	59.34.0479	4.7 pF	10%	50V	Cer	
	C.....72	59.05.2471	470 pF	2.5%	630V	PP	
	C.....73	59.05.1102	1 nF	1%	630V	PP	
	C.....74	59.05.1681	680 pF	1%	630V	PP	
	C.....75	59.06.0224	220 nF	10%	50V	PETP	
	C.....76	59.06.0224	220 nF	10%	50V	PETP	
	C.....77	59.22.6220	22 uF	-20%	35V	EL	
	C.....78	59.22.5101	100 uF	-20%	25V	EL	
	C.....79	59.22.5101	100 uF	-20%	25V	EL	
	C.....80	59.34.4680	68 pF	10%	50V	Cer	
	C.....81	59.05.2471	470 pF	2.5%	50V	PP	
	C.....82	59.22.2221	220 uF	-20%	6.3V	EL	
	C.....83	59.34.4101	100 pF	10%	50V	Cer	
	C.....84	59.22.5220	22 uF	-20%	25V	EL	
	C.....85	59.22.2471	470 uF	-20%	6.3V	EL	
	C.....86	59.22.5220	22 uF	-20%	25V	EL	
	C.....87	59.22.5220	22 uF	-20%	25V	EL	
	C.....88	59.34.4680	68 pF	10%	50V	Cer	
	C.....89	59.34.4101	100 pF	5%	50V	Cer	
	C.....90	59.22.3470	47 uF	-20%	10V	EL	
	C.....91	59.05.1223	22 nF	1%	50V	PP	
	C.....92	59.26.2100	10 uF	20%	10V	SAL	
	C.....93	00.00.0000	not used				
	C.....94	59.41.5101	100 uF	-20%	25V	EL, with Isolation 50.20.1003	
	C.....95	59.34.4680	68 pF	10%	50V	Cer	
	C.....96	59.05.2102	1 nF	2.5%	50V	PP	
	C.....97	59.06.0153	15 nF	10%	50V	PETP	
	C.....98	59.22.6100	10 uF	-20%	35V	EL	
	C.....99	59.05.2332	3.3 nF	2.5%	50V	PP	
	C...100	59.22.3470	47 uF	-20%	10V	EL	
	C...101	59.22.3470	47 uF	-20%	10V	EL	
	C...102	59.05.2103	10 nF	2.5%	50V	PP	
	C...103	59.22.6100	10 uF	-20%	35V	EL	
	C...104	59.34.2220	22 pF	10%	50V	Cer	
	C...105	59.34.2220	22 pF	10%	50V	Cer	
	C...106	59.06.0683	68 nF	10%	50V	PETP	
	C...107	59.22.3470	47 uF	-20%	10V	EL	
	C...108	59.22.3470	47 uF	-20%	10V	EL	
	C...109	59.06.0104	100 nF	10%	50V	PETP	
	C...110	59.34.5391	390 pF	10%	50V	Cer	
	C...111	59.22.3470	47 uF	-20%	10V	EL	
	C...112	59.22.3470	47 uF	-20%	10V	EL	
	C...113	59.06.0222	2.2 nF	10%	50V	PETP	
	C...114	59.34.5471	470 pF	10%	50V	Cer	
	C...115	59.22.3470	47 uF	-20%	10V	EL	
	C...116	59.22.3101	100 uF	-20%	10V	EL	
	C...117	59.22.3470	47 uF	-20%	10V	EL	
	C...118	59.22.3470	47 uF	-20%	10V	EL	
	C...119	59.06.0153	15 nF	10%	50V	PETP	
	C...120	59.25.5471	470 uF	-20%	35V	EL	
	C...123	59.22.8479	4.7 uF	-20%	35V	EL	
	C...124	59.06.0683	68 nF	10%	50V	PETP	
	C...125	59.06.0683	68 nF	10%	50V	PETP	
	C...126	59.34.4151	150 pF	10%	50V	Cer	
	C...127	59.22.8479	4.7 uF	-20%	35V	EL	
	C...128	59.34.4680	68 pF	10%	50V	Cer	
	C...129	59.06.5334	330 nF	5%	50V	PETP	
	C...130	59.34.4151	150 pF	10%	50V	Cer	
	C...131	59.06.0683	68 nF	10%	50V	PETP	
	C...135	59.22.3101	100 uF	-20%	10V	EL	
01	C...136	59.06.0104	100 nF	10%	50V	PETP	
	D.....3	50.04.0125	1N4448		50V	SI	
	D.....4	50.04.1102	6.8 V	5%	0.4W	Zener	
	D.....5	50.04.1106	2.7 V	5%,	0.4W	Zener	
	D.....6	50.04.1112	5.1 V	5%,	0.4W	Zener	
	D.....7	50.04.0125	1N4448		50V	SI	
	D.....8	50.04.1106	2.7 V	5%,	0.4W	Zener	
	D.....9	50.04.0125	1N4448		50V	SI	
	D....10	50.04.0125	1N4448		50V	SI	
	D....11	50.04.0125	1N4448		50V	SI	
	D....12	50.04.0125	1N4448		50V	SI	
	D....13	50.04.0125	1N4448		50V	SI	
	D....14	50.04.0125	1N4448		50V	SI	
	D....15	50.04.0125	1N4448		50V	SI	
	D....16	50.04.0125	1N4448		50V	SI	
	D....17	50.04.0125	1N4448		50V	SI	
	D....18	50.04.0125	1N4448		50V	SI	
	D....19	50.04.0125	1N4448		50V	SI	
	D....20	50.04.0125	1N4448		50V	SI	
	D....21	50.04.0125	1N4448		50V	SI	
	D....22	50.04.1121	24 V	5%	0.4W	Zener	
	D....23	50.04.0125	1N4448		50V	SI	
	D....24	50.04.0125	1N4448		50V	SI	
	D....25	50.04.0125	1N4448		50V	SI	
	D....26	50.04.0125	1N4448		50V	SI	
	D....27	50.04.0125	1N4448		50V	SI	
	D....28	50.04.1114	10 V	5%	0.4W	Zener	
	IC....2	50.09.0105	NE 5532 N	Dual Op. Amp.			Sig
	IC....3	50.09.0105	NE 5532 N	Dual Op. Amp.			Sig
	IC....4	50.07.0015	MC 14053	CMOS Analog Switch			Mot
	IC....5	50.09.0105	NE 5532 N	Dual Op. Amp.			Sig
	IC....6	50.09.0107	RC 4559	Dual Op. Amp.			Ra
	IC....7	50.09.0107	RC 4559	Dual Op. Amp.			Ra
	IC....8	50.07.0024	MC 14052	CMOS Analog Switch			Mot
	IC....9	50.09.0107	RC 4559	Dual Op. Amp.			Ra
	IC...10	50.09.0107	RC 4559	Dual Op. Amp.			Ra
	IC...11	50.07.0026	AD 7528JN	Dual 8-bit D/A Converter			ADI
	IC...12	50.07.0002	AD 7524JN	8-bit D/A Converter			ADI
	IC...13	50.09.0107	RC 4559	Dual Op. Amp.			Ra
	IC...14	50.09.0107	RC 4559	Dual Op. Amp.			Ra
	IC...15	50.09.0101	LF 353	Dual Op. Amp.			NS
	IC...16	50.09.0112	LM 13700	Dual OTA			NS
	IC...17	50.07.0015	MC 14053	CMOS Analog Switch			Mot
	IC...18	50.07.0024	MC 14052	CMOS Analog Switch			Mot
	IC...19	50.09.0107	RC 4559	Dual Op. Amp.			Ra
	IC...20	50.09.0107	RC 4559	Dual Op. Amp.			Ra
	IC...21	50.09.0107	RC 4559	Dual Op. Amp.			Ra
	IC...22	50.09.0105	NE 5532 N	Dual Op. Amp.			Sig
	IC...23	50.07.0026	AD 7528JN	Dual 8-bit D/A Converter			ADI
	IC...24	50.09.0105	NE 5532 N	Dual Op. Amp.			Sig
	IC...25	50.09.0107	RC 4559	Dual Op. Amp.			Ra
	IC...26	50.07.0015	MC 14053	CMOS Analog Switch			Mot
	IC...27	50.09.0105	NE 5532 N	Dual Op. Amp.			Sig
	J.....2	54.01.0249	3-Pole	CIS Socket Strip			AMP
	J.....3	54.01.0304	4-Pole	CIS Socket Strip			AMP
	J.....4	54.01.0305	5-Pole	CIS Socket Strip			AMP
	J.....5	54.01.0304	4-Pole	CIS Socket Strip			AMP
	J.....6	54.01.0304	4-Pole	CIS Socket Strip			AMP
	J.....7	54.01.0304	4-Pole	CIS Socket Strip			AMP
	JP....1	54.01.0021		Bridge			
	JP....2	54.01.0021		Bridge			
	JP....3	54.01.0021		Bridge			
	K.....1	56.04.0144	4*U	Relay, 24V, 1200 Ohm			
	K.....2	56.04.0143	2*U	Relay, 24V, 2000 Ohm			
	L.....2	62.01.0128	1mH				
	L.....3	1.177.231.00	2.4mH				St
	L.....4	62.01.0128	1mH				
	L.....5	62.01.0128	1mH				
	L.....6	62.01.0128	1mH				
	L.....7	62.01.0128	1mH				
	L.....8	62.01.0128	1mH				

AUDIO ELECTRONICS BOARD 2/2 VUK HS 1.727.477.00

Ad	..POS..	...REF.No...	DESCRIPTION			MANUFACTURER
	MP....1	54.01.0020	4 pcs	Contact Pin JP1		
	MP....2	54.01.0020	3 pcs	Contact Pin JP2		
	MP....3	54.01.0020	3 pcs	Contact Pin JP3		
	MP....4	1.010.043.22	2 pcs	Rivet Nut M3*20		
	MP....5	21.51.8355	2 pcs	Screw M3*8		
	MP....6	24.16.1030	2 pcs	Washer		
	MP....7	50.20.2001	4 pcs	Clip, 2*T092		
	MP....8	1.727.420.01	1 pce	Heatsink		St
	MP....9	1.727.420.02	1 pce	Thermoplastic		St
	MP...10	1.727.477.10	1 pce	No. Label		St
	MP...11	1.727.460.11	1 pce	Audio Electronics PCB		St
	MP...12	1.022.400.03	2 pcs	Isolation T2,T3		St
	MP...13	1.010.013.22	2 pcs	Rivet Nut M3*3		
	MP...14	50.20.2002	4 pcs	Clip, T0126		
	MP...15	43.01.0108	1 pce	ESE Warning Label		
	MP...16	53.03.0228	2 pcs	1-Pole Socket (R219)		
	MP...17	50.20.1003	1 pce	Isolation for C94		
	P.....1	54.01.0223	7-Pole	CIS Pin Strip		
	P.....2	54.01.0261	20-Pole	CIS Pin Strip		
	P.....3	54.01.0273	13-Pole	CIS Pin Strip		
	P.....4	54.01.0261	20-Pole	CIS Pin Strip		
	Q.....4	00.00.0000		not used		
	Q.....5	50.03.0515	BC307B	BC557B, BC560B	PNP	
	Q.....6	50.03.0350	J112		FET	Mot
	Q.....7	50.03.0436	BC237B	BC547B, BC550B	NPN	
	Q.....8	50.03.0515	BC307B	BC557B, BC560B	PNP	
	Q.....9	50.03.0436	BC237B	BC547B, BC550B	NPN	
	Q....10	50.03.0436	BC237B	BC547B, BC550B	NPN	
	Q....11	50.03.0436	BC237B	BC547B, BC550B	NPN	
	Q....12	50.03.0436	BC237B	BC547B, BC550B	NPN	
	Q....13	50.03.0515	BC307B	BC557B, BC560B	PNP	
	Q....14	50.03.0495	BD135-16		NPN	
	Q....15	50.03.0436	BC237B	BC547B, BC550B	NPN	
	Q....16	50.03.0510	BD136-16		PNP	
	Q....17	50.03.0515	BC307B	BC557B, BC560B	PNP	
	Q....18	50.03.0495	BD135-16		NPN	
	Q....19	50.03.0436	BC237B	BC547B, BC550B	NPN	
	Q....20	50.03.0510	BD136-16		PNP	
	Q....21	50.03.0350	J112		FET	Mot
	Q....22	00.00.0000		not used		
	Q....23	50.03.0515	BC307B	BC557B, BC560B	PNP	
	Q....24	50.03.0329	WP146		FET	Mot
	Q....25	50.03.0625	BC327		PNP	
	Q....26	50.03.0625	BC327		PNP	
	Q....28	50.03.0340	BC337-25		NPN	
	Q....29	50.03.0515	BC307B	BC557B, BC560B	NPN	
	Q....30	50.03.0436	BC237B	BC547B, BC550B	NPN	
	Q....31	50.03.0515	BC307B	BC557B, BC560B	NPN	
	Q....32	50.03.0516	BC337	matched with Q33,	NPN	
	Q....33	50.03.0516	BC337	matched with Q32,	NPN	
	Q....34	50.03.0625	BC327	matched with Q35,	PNP	
	Q....35	50.03.0625	BC327	matched with Q34,	PNP	
	Q....36	50.03.0516	BC337	matched with Q37,	NPN	
	Q....37	50.03.0516	BC337	matched with Q36,	NPN	
	Q....38	50.03.0625	BC327	matched with Q39,	PNP	
	Q....39	50.03.0625	BC327	matched with Q38,	PNP	
	Q....40	50.03.0350	J112		FET	Mot
	R....11	57.11.3152	1.5 kOhm	1%, 0.25W, MF		
	R....12	57.11.3152	1.5 kOhm	1%, 0.25W, MF		
	R....13	57.11.3392	3.9 kOhm	1%, 0.25W, MF		
	R....14	57.11.3392	3.9 kOhm	1%, 0.25W, MF		
	R....15	57.11.3182	1.8 kOhm	1%, 0.25W, MF		
	R....18	58.01.8502	5 kOhm	10%, 0.5 W, PMG		
	R....19	57.11.3821	820 Ohm	1%, 0.25W, MF		
	R....20	57.11.3123	12 kOhm	1%, 0.25W, MF		
	R....21	57.11.3222	2.2 kOhm	1%, 0.25W, MF		
	R....22	00.00.0000		not used		
	R....23	00.00.0000		not used		
	R....24	00.00.0000		not used		
	R....25	57.11.3433	43 kOhm	1%, 0.25W, MF		
	R....26	57.11.3392	3.9 kOhm	1%, 0.25W, MF		
	R....27	57.11.3432	4.3 kOhm	1%, 0.25W, MF		
	R....28	57.11.3101	100 Ohm	1%, 0.25W, MF		
	R....29	57.11.3682	6.8 kOhm	1%, 0.25W, MF		
	R....30	57.11.3103	10 kOhm	1%, 0.25W, MF		
	R....32	57.11.3682	6.8 kOhm	1%, 0.25W, MF		
	R....33	57.11.3103	10 kOhm	1%, 0.25W, MF		
	R....43	57.11.3473	47 kOhm	1%, 0.25W, MF		
	R....44	57.11.3102	1 kOhm	1%, 0.25W, MF		
	R....45	57.11.3222	2.2 kOhm	1%, 0.25W, MF		
	R....46	57.11.3472	4.7 kOhm	1%, 0.25W, MF		
	R....47	57.11.3472	4.7 kOhm	1%, 0.25W, MF		
	R....48	57.11.3473	47 kOhm	1%, 0.25W, MF		
	R....49	57.11.3472	4.7 kOhm	1%, 0.25W, MF		
	R....50	57.11.3132	1.3 kOhm	1%, 0.25W, MF		
	R....51	57.11.3472	4.7 kOhm	1%, 0.25W, MF		
	R....52	57.11.3473	47 kOhm	1%, 0.25W, MF		
	R....53	57.11.3682	6.8 kOhm	1%, 0.25W, MF		
	R....54	57.11.3472	4.7 kOhm	1%, 0.25W, MF		
	R....55	57.11.3333	33 kOhm	1%, 0.25W, MF		
	R....56	57.11.3472	4.7 kOhm	1%, 0.25W, MF		
	R....57	57.11.3272	2.7 kOhm	1%, 0.25W, MF		
	R....58	57.11.3272	2.7 kOhm	1%, 0.25W, MF		
	R....59	57.11.3223	22 kOhm	1%, 0.25W, MF		
	R....60	00.00.0000		not used		
	R....61	57.11.3152	1.5 kOhm	1%, 0.25W, MF		
	R....62	57.11.3103	10 kOhm	1%, 0.25W, MF		
	R....63	57.11.3154	150 kOhm	1%, 0.25W, MF		
	R....64	57.11.3102	1 kOhm	1%, 0.25W, MF		
	R....65	57.11.3332	3.3 kOhm	2%, 0.25W, MF		
	R....66	57.11.3273	27 kOhm	2%, 0.25W, MF		
	R....67	57.11.3302	3 kOhm	1%, 0.25W, MF		
	R....68	57.11.3302	3 kOhm	1%, 0.25W, MF		
	R....69	57.11.3473	47 kOhm	1%, 0.25W, MF		
	R....70	57.11.3682	6.8 kOhm	1%, 0.25W, MF		
	R....71	57.11.3393	39 kOhm	1%, 0.25W, MF		
	R....72	57.11.3472	4.7 kOhm	1%, 0.25W, MF		
	R....73	57.11.3104	100 kOhm	1%, 0.25W, MF		
	R....74	57.11.3682	6.8 kOhm	1%, 0.25W, MF		
	R....75	57.11.3104	100 kOhm	1%, 0.25W, MF		
	R....76	57.11.3562	5.6 kOhm	1%, 0.25W, MF		
	R....77	57.11.3823	82 kOhm	1%, 0.25W, MF		
	R....78	57.11.3103	10 kOhm	1%, 0.25W, MF		
	R....79	57.11.3472	4.7 kOhm	1%, 0.25W, MF		
	R....80	57.11.3681	680 Ohm	1%, 0.25W, MF		
	R....81	57.11.3473	47 kOhm	1%, 0.25W, MF		
	R....82	00.00.0000		not used		
	R....83	57.11.3152	1.5 kOhm	1%, 0.25W, MF		
	R....84	57.11.3154	150 kOhm	1%, 0.25W, MF		
	R....85	57.11.3102	1 kOhm	1%, 0.25W, MF		
	R....86	57.11.3103	10 kOhm	2%, 0.25W, MF		
	R....87	57.11.3273	27 kOhm	2%, 0.25W, MF		
	R....88	57.11.3103	10 kOhm	1%, 0.25W, MF		
	R....89	57.11.3682	6.8 kOhm	1%, 0.25W, MF		
	R....90	57.11.3103	10 kOhm	1%, 0.25W, MF		
	R....91	57.11.3682	6.8 kOhm	1%, 0.25W, MF		
	R....92	57.11.3683	68 kOhm	1%, 0.25W, MF		
	R....93	57.11.3752	7.5 kOhm	1%, 0.25W, MF		
	R....94	57.11.3562	5.6 kOhm	1%, 0.25W, MF		
	R....95	57.11.3101	100 Ohm	1%, 0.25W, MF		
	R....96	57.11.3432	4.3 kOhm	1%, 0.25W, MF		
	R....97	57.11.3432	4.3 kOhm	1%, 0.25W, MF		
	R....98	00.00.0000		not used		
	R....99	57.11.3472	4.7 kOhm	1%, 0.25W, MF		
	R...100	57.11.3333	33 kOhm	2%, 0.25W, MF		
	R...101	57.11.3103	10 kOhm	1%, 0.25W, MF		
	R...102	57.11.5335	3.3 MOhm	5%, 0.25W, MF		
	R...103	57.11.3472	4.7 kOhm	1%, 0.25W, MF		
	R...104	57.11.3102	1 kOhm	1%, 0.25W, MF		
	R...105	57.11.3391	390 Ohm	1%, 0.25W, MF		
	R...106	57.11.3102	1 kOhm	2%, 0.25W, MF		
	R...107	57.11.3822	8.2 kOhm	1%, 0.25W, MF		
	R...108	57.11.3182	1.8 kOhm	1%, 0.25W, MF		
	R...109	57.11.3151	150 Ohm	1%, 0.25W, MF		
	R...110	57.11.3562	5.6 kOhm	1%, 0.25W, MF		
	R...111	57.11.3823	82 kOhm	1%, 0.25W, MF		
	R...112	57.11.3132	1.3 kOhm	1%, 0.25W, MF		
	R...113	57.11.3223	22 kOhm	1%, 0.25W, MF		
	R...114	57.11.3274	270 kOhm	2%, 0.25W, MF		
	R...115	57.11.3223	22 kOhm	1%, 0.25W, MF		
	R...116	57.11.3223	22 kOhm	1%, 0.25W, MF		
	R...117	57.11.3223	22 kOhm	1%, 0.25W, MF		
	R...118	57.11.3223	22 kOhm	1%, 0.25W, MF		
	R...119	57.11.3102	1 kOhm	1%, 0.25W, MF		
	R...120	57.11.3104	100 kOhm	1%, 0.25W, MF		
	R...121	57.11.3682	6.8 kOhm	1%, 0.25W, MF		
	R...122	57.11.3154	150 kOhm	1%, 0.25W, MF		
	R...123	57.11.3471	470 Ohm	1%, 0.25W, MF		
	R...124	57.11.5106	10 MOhm	5%, 0.25W, MF		
	R...125	57.11.5106	10 MOhm	5%, 0.25W, MF		
	R...126	57.11.3103	10 kOhm	1%, 0.25W, MF		
	R...127	57.11.3472	4.7 kOhm	1%, 0.25W, MF		
	R...128	57.11.3472	4.7 kOhm	1%, 0.25W, MF		
	R...129	57.11.3103	10 kOhm	1%, 0.25W, MF		
	R...130	57.11.3153	15 kOhm	1%, 0.25W, MF		
	R...131	57.11.3153	15 kOhm	1%, 0.25W, MF		
	R...132	57.11.3103	10 kOhm	1%, 0.25W, MF		
	R...133	57.11.3221	220 Ohm	1%, 0.25W, MF		
	R...134	57.11.3221	220 Ohm	1%, 0.25W, MF		
	R...135	57.11.3221	220 Ohm	1%, 0.25W, MF		
	R...136	57.11.3221	220 Ohm	1%, 0.25W, MF		
	R...137	57.11.3682	6.8 kOhm	1%, 0.25W, MF		
	R...138	57.11.3472	4.7 kOhm	2%, 0.25W, MF		
	R...139	58.01.8502	5 kOhm	10%, 0.5 W, PMG		
	R...140	57.11.3229	2.2 Ohm	1%, 0.25W, MF		
	R...141	57.11.3301	300 Ohm	1%, 0.25W, MF		
	R...142	57.11.3152	1.5 kOhm	2%, 0.25W, MF		
	R...143	57.11.3332	3.3 kOhm	1%, 0.25W, MF		
	R...145	57.11.3332	3.3 kOhm	1%, 0.25W, MF		
	R...147	57.11.3471	470 Ohm	1%, 0.25W, MF		
	R...149	57.11.3220	22 Ohm	1%, 0.25W, MF		
	R...150	57.11.3220	22 Ohm	1%, 0.25W, MF		
	R...151	57.11.3332	3.3 kOhm	1%, 0.25W, MF		
	R...153	57.11.3332	3.3 kOhm	1%, 0.25W, MF		
	R...155	57.11.3471	470 Ohm	1%, 0.25W, MF		
	R...157	57.11.3220	22 Ohm	1%, 0.25W, MF		
	R...158	57.11.3220	22 Ohm	1%, 0.25W, MF		
	R...159	57.11.3470	47 Ohm	1%, 0.25W, MF		
	R...160	57.11.3229	2.2 Ohm	1%, 0.25W, MF		
	R...161	57.11.3470	47 Ohm	1%, 0.25W, MF		

AUDIO ELECTRONICS BOARD 2/2 VUK HS 1.727.477.00

Ad	..POS..	...REF.No...	DESCRIPTION	MANUFACTURER
	R...162	57.11.3472	4.7 kOhm 1%, 0.25W, MF	
	R...163	57.11.3229	2.2 Ohm 1%, 0.25W, MF	
	R...164	57.11.3102	1 kOhm 1%, 0.25W, MF	
	R...165	57.11.3470	47 Ohm 1%, 0.25W, MF	
	R...166	57.11.3472	4.7 kOhm 1%, 0.25W, MF	
	R...167	57.11.3680	68 Ohm 1%, 0.25W, MF	
	R...168	57.11.3682	6.8 kOhm 1%, 0.25W, MF	
	R...169	57.11.3470	47 Ohm 1%, 0.25W, MF	
	R...170	57.11.3229	2.2 Ohm 1%, 0.25W, MF	
	R...171	57.11.3470	47 Ohm 1%, 0.25W, MF	
	R...172	57.11.3472	4.7 kOhm 1%, 0.25W, MF	
	R...173	57.11.3229	2.2 Ohm 1%, 0.25W, MF	
	R...174	57.11.3102	1 kOhm 1%, 0.25W, MF	
	R...175	57.11.3470	47 Ohm 1%, 0.25W, MF	
	R...176	57.11.3472	4.7 kOhm 1%, 0.25W, MF	
	R...177	57.11.3680	68 Ohm 1%, 0.25W, MF	
	R...178	57.11.3682	6.8 kOhm 1%, 0.25W, MF	
	R...179	57.11.3473	47 kOhm 1%, 0.25W, MF	
	R...180	57.11.3100	10 Ohm 1%, 0.25W, MF	
	R...181	57.99.0209	5.6 Ohm PTC	
	R...182	57.11.3569	5.6 Ohm 1%, 0.25W, MF	
	R...183	57.11.3105	1 MOhm 2%, 0.25W, MF	
	R...184	00.00.0000	not used	
	R...185	00.00.0000	not used	
	R...186	57.11.3222	2.2 kOhm 1%, 0.25W, MF	
	R...187	57.11.3222	2.2 kOhm 1%, 0.25W, MF	
	R...188	57.11.3103	10 kOhm 1%, 0.25W, MF	
	R...189	57.11.3682	6.8 kOhm 1%, 0.25W, MF	
	R...190	57.11.3682	6.8 kOhm 1%, 0.25W, MF	
	R...191	57.11.3223	22 kOhm 1%, 0.25W, MF	
	R...192	57.11.3682	6.8 kOhm 1%, 0.25W, MF	
	R...193	57.11.3103	10 kOhm 1%, 0.25W, MF	
	R...194	57.11.3105	1 MOhm 1%, 0.25W, MF	
	R...195	57.11.3681	680 Ohm 1%, 0.25W, MF	
	R...196	00.00.0000	not used	
	R...197	00.00.0000	not used	
	R...198	57.11.3334	330 kOhm 2%, 0.25W, MF	
	R...199	57.11.3224	220 kOhm 2%, 0.25W, MF	
	R...200	57.11.3103	10 kOhm 1%, 0.25W, MF	
	R...201	57.11.3682	6.8 kOhm 1%, 0.25W, MF	
	R...202	57.11.3682	6.8 kOhm 1%, 0.25W, MF	
	R...203	57.11.3103	10 kOhm 1%, 0.25W, MF	
	R...204	00.00.0000	not used	
	R...205	57.11.3181	180 Ohm 1%, 0.25W, MF	
	R...206	57.11.3562	5.6 kOhm 1%, 0.25W, MF	
	R...207	57.11.3104	100 kOhm 1%, 0.25W, MF	
	R...208	57.11.3683	68 kOhm 1%, 0.25W, MF	
	R...209	57.11.3333	33 kOhm 1%, 0.25W, MF	
	R...210	57.11.3333	33 kOhm 1%, 0.25W, MF	
	R...211	57.11.3103	10 kOhm 1%, 0.25W, MF	
	R...212	57.11.3120	12 Ohm 1%, 0.25W, MF	
	R...213	57.11.3560	56 Ohm 1%, 0.25W, MF	
	R...214	57.11.3101	100 Ohm 1%, 0.25W, MF	
	R...215	57.11.3682	6.8 kOhm 1%, 0.25W, MF	
	R...216	57.11.3682	6.8 kOhm 1%, 0.25W, MF	
	R...217	57.11.3682	6.8 kOhm 1%, 0.25W, MF	
	R...218	57.11.3394	390 kOhm 5%, 0.25W, MF	
	R...219	57.11.3104	100 kOhm 1%, 0.25W, MF, with socket	
	R...220	57.11.3222	2.2 kOhm 1%, 0.25W, MF	
	R...221	00.00.0000	not used	
	R...222	57.11.3392	3.9 kOhm 1%, 0.25W, MF	
	R...223	57.11.3563	56 kOhm 1%, 0.25W, MF	
	R...224	57.11.3682	6.8 kOhm 1%, 0.25W, MF	
	R...225	57.11.3393	39 kOhm 1%, 0.25W, MF	
	R...226	57.11.3822	8.2 kOhm 1%, 0.25W, MF	
	R...227	57.11.3473	47 kOhm 1%, 0.25W, MF	
	R...228	57.11.3333	33 kOhm 1%, 0.25W, MF	
	R...229	57.11.3562	5.6 kOhm 1%, 0.25W, MF	
	R...230	57.11.3683	68 kOhm 1%, 0.25W, MF	
	R...231	57.11.3562	5.6 kOhm 1%, 0.25W, MF	
	R...232	57.11.3333	33 kOhm 1%, 0.25W, MF	
	R...233	57.11.3103	10 kOhm 1%, 0.25W, MF	
	R...234	57.11.3271	270 Ohm 1%, 0.25W, MF	
	R...235	57.11.3273	27 kOhm 1%, 0.25W, MF	
	R...236	57.11.3152	1.5 kOhm 1%, 0.25W, MF	
	R...237	57.11.3331	330 Ohm 1%, 0.25W, MF	
	R...238	57.11.3103	10 kOhm 1%, 0.25W, MF	
	R...239	57.11.3103	10 kOhm 1%, 0.25W, MF	
	R...240	57.11.3102	1 kOhm 1%, 0.25W, MF	
	R...241	00.00.0000	not used	
	R...242	57.11.3472	4.7 kOhm 1%, 0.25W, MF	
	R...243	57.11.3473	47 kOhm 1%, 0.25W, MF	
	R...244	57.11.3102	1 kOhm 1%, 0.25W, MF	
	R...245	57.11.3222	2.2 kOhm 1%, 0.25W, MF	
	R...246	58.01.8502	5 kOhm 10%, 0.5 W, PMG	
	R...247	57.11.3821	820 Ohm 1%, 0.25W, MF	
	R...248	57.11.3392	3.9 kOhm 1%, 0.25W, MF	
	R...249	00.00.0000	not used	
	R...250	57.11.3153	15 kOhm 1%, 0.25W, MF	
	R...251	57.11.3473	47 kOhm 1%, 0.25W, MF	
	R...252	57.11.3472	4.7 kOhm 1%, 0.25W, MF	
	R...253	57.11.3472	4.7 kOhm 1%, 0.25W, MF	
	R...254	57.11.3331	330 Ohm 1%, 0.25W, MF	
	R...255	57.11.3102	1 kOhm 1%, 0.25W, MF	
	R...256	57.11.3273	27 kOhm 1%, 0.25W, MF	
	R...257	57.11.3102	1 kOhm 1%, 0.25W, MF	
	R...258	57.11.3471	470 Ohm 1%, 0.25W, MF	
	R...259	57.11.3103	10 kOhm 1%, 0.25W, MF	
	R...260	57.11.3221	220 Ohm 1%, 0.25W, MF	
	R...261	57.11.3122	1.2 kOhm 1%, 0.25W, MF	
	R...262	57.11.3471	470 Ohm 1%, 0.25W, MF	
	R...263	57.11.3223	22 kOhm 1%, 0.25W, MF	
	R...264	57.11.3222	2.2 kOhm 1%, 0.25W, MF	
	R...265	57.11.3473	47 kOhm 1%, 0.25W, MF	
	R...266	57.11.3103	10 kOhm 1%, 0.25W, MF	
	R...267	57.11.3682	6.8 kOhm 1%, 0.25W, MF	
	R...268	57.11.3682	6.8 kOhm 1%, 0.25W, MF	
	R...269	57.11.3103	10 kOhm 1%, 0.25W, MF	
	R...270	57.11.3472	4.7 kOhm 1%, 0.25W, MF	
	R...271	57.11.3122	1.2 kOhm 1%, 0.25W, MF	
	R...272	57.11.3223	22 kOhm 1%, 0.25W, MF	
	R...273	57.11.3223	22 kOhm 1%, 0.25W, MF	
	R...274	57.11.3473	47 kOhm 1%, 0.25W, MF	
	R...275	57.11.3223	22 kOhm 1%, 0.25W, MF	
	R...276	57.11.3103	10 kOhm 1%, 0.25W, MF	
	R...277	57.11.3339	3.3 Ohm 1%, 0.25W, MF	
	R...278	57.11.3103	10 kOhm 1%, 0.25W, MF	
	R...279	57.11.3103	10 kOhm 1%, 0.25W, MF	
	R...280	57.11.3339	3.3 Ohm 1%, 0.25W, MF	
	R...281	57.11.3222	2.2 kOhm 1%, 0.25W, MF	
	R...282	57.11.3222	2.2 kOhm 1%, 0.25W, MF	
	R...283	57.11.3339	3.3 Ohm 1%, 0.25W, MF	
	R...284	57.11.3103	10 kOhm 1%, 0.25W, MF	
	R...285	57.11.3103	10 kOhm 1%, 0.25W, MF	
	R...286	57.11.3339	3.3 Ohm 1%, 0.25W, MF	
	R...287	57.11.3472	4.7 kOhm 1%, 0.25W, MF	
	R...288	57.11.3103	10 kOhm 1%, 0.25W, MF	
	R...289	57.11.3471	470 Ohm 1%, 0.25W, MF	
	R...290	57.11.3391	390 Ohm 1%, 0.25W, MF	
	R...291	57.11.3152	1.5 kOhm 1%, 0.25W, MF	
	R...292	57.92.1151	18 Ohm 150mA, PTC	
	R...293	57.11.3180	18 Ohm 1%, 0.25W, MF	
	R...294	57.11.3470	47 Ohm 1%, 0.25W, MF	
	R...295	57.11.3223	22 kOhm 1%, 0.25W, MF	
	R...296	57.11.3105	1 MOhm 1%, 0.25W, MF	
	R...297	57.11.3472	4.7 kOhm 1%, 0.25W, MF	
	T.....2	1.022.451.00	1:0.62 Line Input Trafo	St
	T.....3	1.022.271.00	Erase Trafo	St
	T.....4	1.022.272.00	Bias Trafo	St
	T.....5	1.022.402.00	1:10 Sync Trafo	St
	T.....6	1.022.355.00	Line Output Trafo	St
	TP....1	54.02.0320	Plug 2.8*0.8	AMP
	TP....2	54.02.0320	Plug 2.8*0.8	AMP
	TP....3	54.02.0320	Plug 2.8*0.8	AMP
	TP....4	54.02.0320	Plug 2.8*0.8	AMP
	TP....5	54.02.0320	Plug 2.8*0.8	AMP
	TP....6	54.02.0320	Plug 2.8*0.8	AMP
	TP....7	54.02.0320	Plug 2.8*0.8	AMP
	W.....3	64.01.0106	Wire Bridge	
	W.....4	64.01.0106	Wire Bridge	
	W.....5	64.01.0106	Wire Bridge	
	W.....6	00.00.0000	not used	
	W.....7	64.01.0106	Wire Bridge	
	W.....8	64.01.0106	Wire Bridge	
	W....13	1.010.329.64	Wire Bridge	
	XIC...2	53.03.0166	8-Pole IC Socket	
	XIC...3	53.03.0166	8-Pole IC Socket	
	XIC...4	53.03.0168	16-Pole IC Socket	
	XIC...5	53.03.0166	8-Pole IC Socket	
	XIC...6	53.03.0166	8-Pole IC Socket	
	XIC...7	53.03.0166	8-Pole IC Socket	
	XIC...8	53.03.0168	16-Pole IC Socket	
	XIC...9	53.03.0166	8-Pole IC Socket	
	XIC..10	53.03.0166	8-Pole IC Socket	
	XIC..11	53.03.0165	20-Pole IC Socket	
	XIC..12	53.03.0168	16-Pole IC Socket	
	XIC..13	53.03.0166	8-Pole IC Socket	
	XIC..14	53.03.0166	8-Pole IC Socket	
	XIC..15	53.03.0166	8-Pole IC Socket	
	XIC..16	53.03.0168	16-Pole IC Socket	
	XIC..17	53.03.0168	16-Pole IC Socket	
	XIC..18	53.03.0168	16-Pole IC Socket	
	XIC..19	53.03.0166	8-Pole IC Socket	
	XIC..20	53.03.0166	8-Pole IC Socket	
	XIC..21	53.03.0166	8-Pole IC Socket	
	XIC..22	53.03.0166	8-Pole IC Socket	
	XIC..23	53.03.0165	20-Pole IC Socket	
	XIC..24	53.03.0166	8-Pole IC Socket	
	XIC..25	53.03.0166	8-Pole IC Socket	
	XIC..26	53.03.0168	16-Pole IC Socket	
	XIC..27	53.03.0166	8-Pole IC Socket	

Cer = Ceramic EL = Electrolytic PETP = Polyester
PP = Polypropylen MF = Metal Film SI = Silicon
SAL = Solid Aluminium
MANUFACTURER: ADI = Analog Devices Inc. Mot = Motorola
NS = National Semiconductors Ra = Raytheon
Sig = Signetics St = Studer

1.727.477.00 AUDIO ELECTR. BOARD 2/2 VUK H S GP91/11/2800

1.727.477.00 AUDIO ELECTR. BOARD 2/2 VUK H S GP94/03/2901

END →

AUDIO ELECTRONICS BOARD PBO 1.727.465.83

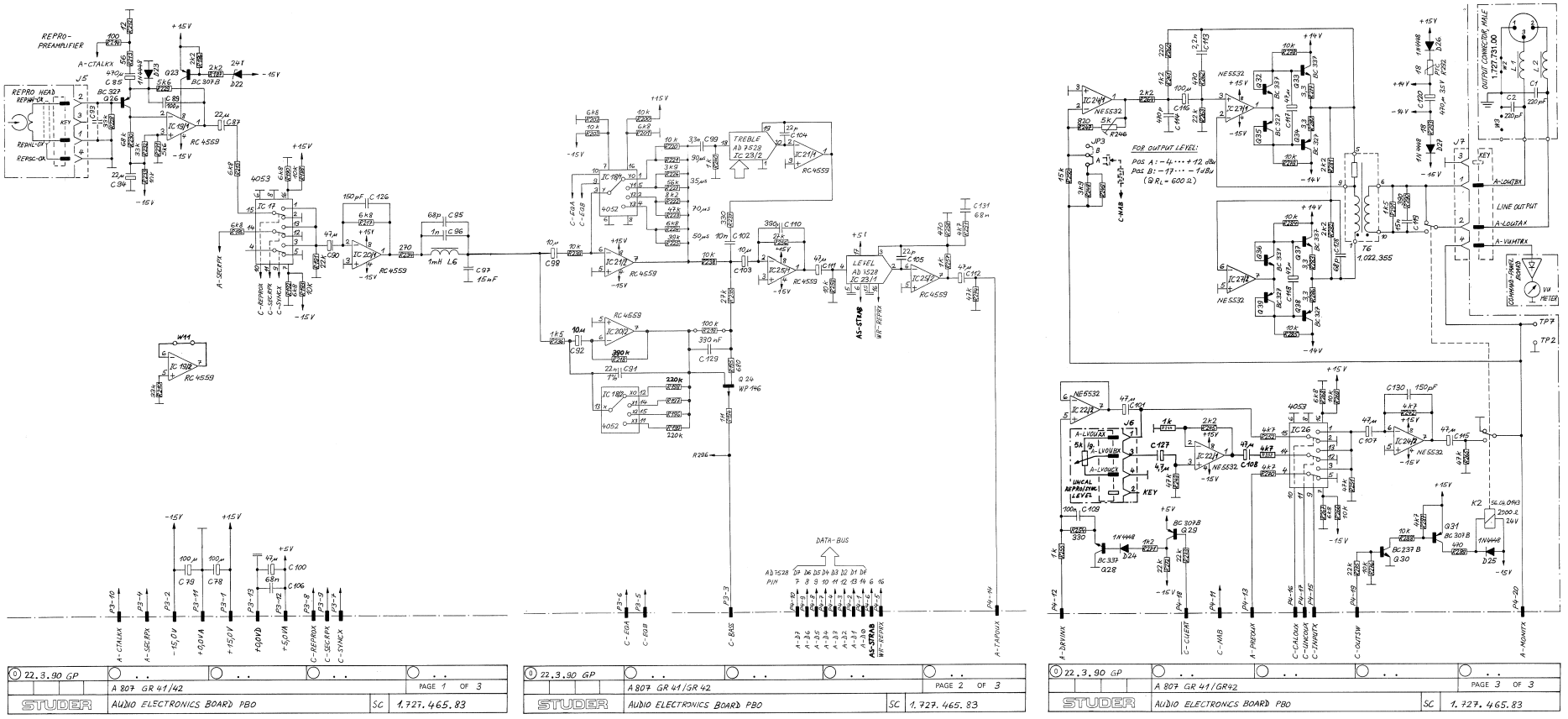

0 22.3.90 GP				
A 807 GR 41/42				PAGE 1 OF 3
STUDER	AUDIO ELECTRONICS BOARD PBO	SC	1.727.465.83	

0 22.3.90 GP				
A 807 GR 41/GR 42				PAGE 2 OF 3
STUDER	AUDIO ELECTRONICS BOARD PBO	SC	1.727.465.83	

0 22.3.90 GP				
A 807 GR 41/GR42				PAGE 3 OF 3
STUDER	AUDIO ELECTRONICS BOARD PBO	SC	1.727.465.83	

AUDIO ELECTRONICS BOARD PBO 1.727.465.83

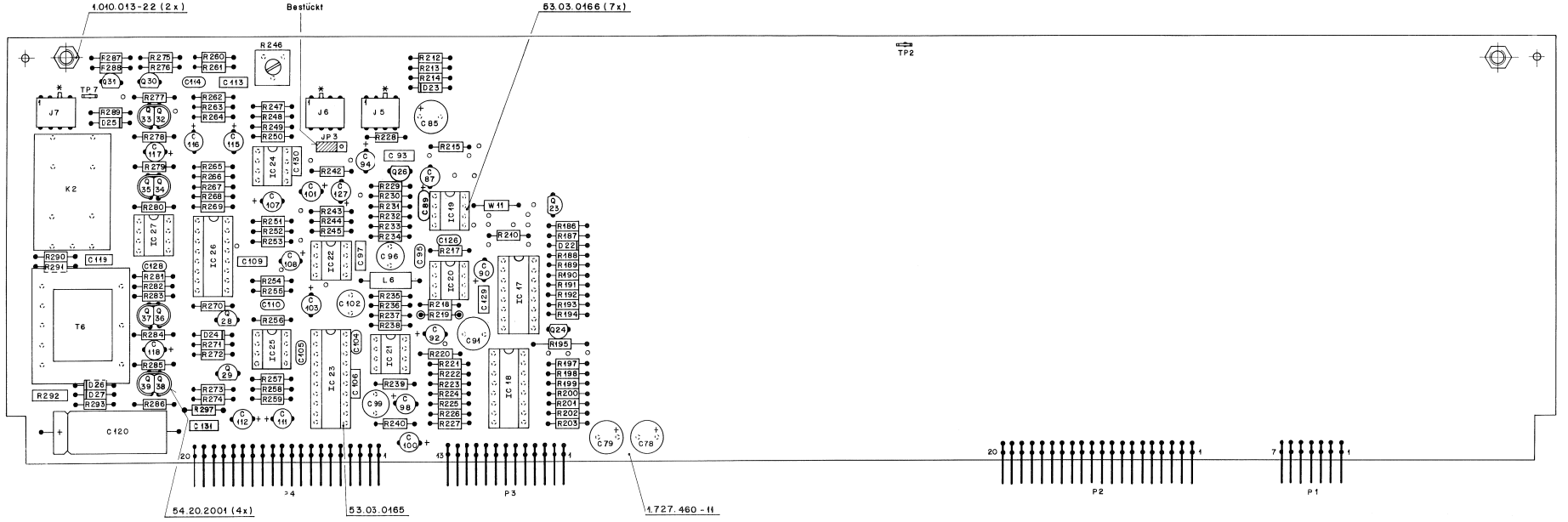

R246 = OUTPUT LEVEL ADJUSTMENT

JP3 OUTPUT LEVEL SENSITIVITY

TP2 0.0 V
TP7 VU METER SIGNAL (0.775 V = 0 VU)

FACTORY STANDARD SETTING

IND.	POS.NO.	PART NO.	VALUE	SPECIFICATIONS / EQUIVALENT	MANUF.
	C....78	59.22.5101	100 uF	-20% 25V EL	
	C....79	59.22.5101	100 uF	-20% 25V EL	
	C....85	59.22.2471	470 uF	-20% 6.3V EL	
	C....87	59.22.5220	22 uF	-20% 25V EL	
	C....89	59.34.4101	100 pF	5% 50V Cer	
	C....90	59.22.3470	47 uF	-20% 10V EL	
	C....91	59.05.1223	22 nF	1% 50V PP	
	C....92	59.26.2100	10 uF	20% 10V SAL	
	C....93		not used		
	C....94	59.22.5220	22 uF	-20% 25V EL	
	C....95	59.34.4680	68 pF	10% 50V Cer	
	C....96	59.05.2102	1 nF	2.5% 50V PP	
	C....97	59.06.0153	15 nF	10% 50V PETP	
	C....98	59.22.6100	10 uF	-20% 35V EL	
	C....99	59.05.2332	3.3 nF	2.5% 50V PP	
	C...100	59.22.3470	47 uF	-20% 10V EL	
	C...101	59.22.3470	47 uF	-20% 10V EL	
	C...102	59.05.2103	10 nF	2.5% 50V PP	
	C...103	59.22.6100	10 uF	-20% 35V EL	
	C...104	59.34.2220	22 pF	10% 50V Cer	
	C...105	59.34.2220	22 pF	10% 50V Cer	
	C...106	59.06.0683	68 nF	10% 50V PETP	
	C...107	59.22.3470	47 uF	-20% 10V EL	
	C...108	59.22.3470	47 uF	-20% 10V EL	
	C...109	59.06.0104	100 nF	10% 50V PETP	
	C...110	59.34.5391	390 pF	10% 50V Cer	
	C...111	59.22.3470	47 uF	-20% 10V EL	
	C...112	59.22.3470	47 uF	-20% 10V EL	
	C...113	59.06.0222	2.2 nF	10% 50V PETP	
	C...114	59.34.5471	470 pF	10% 50V Cer	
	C...115	59.22.3470	47 uF	-20% 10V EL	
	C...116	59.22.3101	100 uF	-20% 10V EL	
	C...117	59.22.3470	47 uF	-20% 10V EL	
	C...118	59.22.3470	47 uF	-20% 10V EL	
	C...119	59.06.0153	15 nF	10% 50V PETP	
	C...120	59.25.5471	470 uF	-20% 35V EL	
	C...126	59.34.4151	150 pF	10% 50V Cer	

IND.	POS.NO.	PART NO.	VALUE	SPECIFICATIONS / EQUIVALENT	MANUF.
	C...127	59.22.8479	4.7 uF	-20% 35V EL	
	C...128	59.34.4680	68 pF	10% 50V Cer	
	C...129	59.06.5334	330 nF	5% 50V PETP	
	C...130	59.34.4151	150 pF	10% 50V Cer	
	C...131	59.06.0683	68 nF	10% 50V PETP	
	D....22	50.04.1121	24 V	5% 0.4W Zener	
	D....23	50.04.0125	1N4448	50V SI	
	D....24	50.04.0125	1N4448	50V SI	
	D....25	50.04.0125	1N4448	50V SI	
	D....26	50.04.0125	1N4448	50V SI	
	D....27	50.04.0125	1N4448	50V SI	
	IC...17	50.07.0015	MC 14053	CMOS Analog Switch	Mot
	IC...18	50.07.0024	MC 14052	CMOS Analog Switch	Mot
	IC...19	50.09.0107	RC 4559	Dual Op. Amp.	Ra
	IC...20	50.09.0107	RC 4559	Dual Op. Amp.	Ra
	IC...21	50.09.0107	RC 4559	Dual Op. Amp.	Ra
	IC...22	50.09.0105	NE 5532	Dual Op. Amp.	Sig
	IC...23	50.07.0026	AD 7528JN	Dual 8-bit D/A Converter	ADI
	IC...24	50.09.0105	NE 5532	Dual Op. Amp.	Sig
	IC...25	50.09.0107	RC 4559	Dual Op. Amp.	Ra
	IC...26	50.07.0015	MC 14053	CMOS Analog Switch	Mot
	IC...27	50.09.0105	NE 5532	Dual Op. Amp.	Sig
	J....5	54.01.0304	4-Pole	CIS Socket Strip	AMP
	J....6	54.01.0304	4-Pole	CIS Socket Strip	AMP
	J....7	54.01.0304	4-Pole	CIS Socket Strip	AMP
	JP...3	54.01.0021		Bridge	
	K....2	56.04.0143	2wU	Relay, 24V, 2000 Ohm	
	L....6	62.01.0128	1mH		
	MP...3	54.01.0020	3 pcs	Contact Pin JP3	
	MP...7	50.20.2001	4 pcs	Clip, 24TO92	

IND.	POS.NO.	PART NO.	VALUE	SPECIFICATIONS / EQUIVALENT	MANUF.
	MP...10	1.727.465.10	1 pc	No. Label	St
	MP...11	1.727.460.11	1 pc	Audio Electronics PCB	St
	MP...13	1.010.013.22	2 pcs	Rivet Nut M3x3	
	MP...15	43.01.0108	1 pc	ESI Warning Label	
	MP...16	53.03.0228	2 pcs	1-Isle Socket (8219)	
	P.....1	54.01.0223	7-Pole	CIS Pin Strip	
	P.....2	54.01.0261	20-Pole	CIS Pin Strip	
	P.....3	54.01.0273	13-Pole	CIS Pin Strip	
	P.....4	54.01.0261	20-Pole	CIS Pin Strip	
	Q....23	50.03.0515	BC307B	BC557B, BC560B PNP	
	Q....24	50.03.0329	WP146	FET	Mot
	Q....26	50.03.0625	BC327	PNP	
	Q....28	50.03.0340	BC337-25	NPN	
	Q....29	50.03.0515	BC307B	BC557B, BC560B PNP	
	Q....30	50.03.0436	BC237B	BC547B, BC550B NPN	
	Q....31	50.03.0515	BC307B	BC557B, BC560B PNP	
	Q....32	50.03.0516	BC337	matched with Q33, NPN	
	Q....33	50.03.0516	BC337	matched with Q32, NPN	
	Q....34	50.03.0625	BC327	matched with Q35, PNP	
	Q....35	50.03.0625	BC327	matched with Q34, PNP	
	Q....36	50.03.0516	BC337	matched with Q37, NPN	
	Q....37	50.03.0516	BC337	matched with Q36, NPN	
	Q....38	50.03.0625	BC327	matched with Q39, PNP	
	Q....39	50.03.0625	BC327	matched with Q38, PNP	
	R...186	57.11.3222	2.2 kOhm	2%, 0.25W, MF	
	R...187	57.11.3222	2.2 kOhm	2%, 0.25W, MF	
	R...188	57.11.3103	10 kOhm	2%, 0.25W, MF	
	R...189	57.11.3682	6.8 kOhm	2%, 0.25W, MF	
	R...190	57.11.3682	6.8 kOhm	2%, 0.25W, MF	
	R...191	57.11.3223	22 kOhm	2%, 0.25W, MF	
	R...192	57.11.3682	6.8 kOhm	2%, 0.25W, MF	
	R...193	57.11.3103	10 kOhm	2%, 0.25W, MF	
	R...194	57.11.3105	1 MOhm	2%, 0.25W, MF	
	R...195	57.11.3681	680 Ohm	2%, 0.25W, MF	

IND.	POS.NO.	PART NO.	VALUE	SPECIFICATIONS / EQUIVALENT	MANUF.
	R...196			not used	
	R...197			not used	
	R...198	57.11.3224	220 kOhm	2%, 0.25W, MF	
	R...199	57.11.3224	220 kOhm	2%, 0.25W, MF	
	R...200	57.11.3103	10 kOhm	2%, 0.25W, MF	
	R...201	57.11.3682	6.8 kOhm	2%, 0.25W, MF	
	R...202	57.11.3682	6.8 kOhm	2%, 0.25W, MF	
	R...203	57.11.3103	10 kOhm	2%, 0.25W, MF	
	R...210	57.11.3333	33 kOhm	2%, 0.25W, MF	
	R...212	57.11.3120	12 Ohm	2%, 0.25W, MF	
	R...213	57.11.3560	56 Ohm	2%, 0.25W, MF	
	R...214	57.11.3101	100 Ohm	2%, 0.25W, MF	
	R...215	57.11.3682	6.8 kOhm	2%, 0.25W, MF	
	R...217	57.11.3682	6.8 kOhm	2%, 0.25W, MF	
	R...218	57.11.3394	390 kOhm	5%, 0.25W, MF	
	R...219	57.11.3104	100 kOhm	2%, 0.25W, MF, with socket	
	R...220	57.11.3103	10 kOhm	2%, 0.25W, MF	
	R...221			not used	
	R...222	57.11.3822	8.2 kOhm	2%, 0.25W, MF	
	R...223	57.11.3473	47 kOhm	2%, 0.25W, MF	
	R...224	57.11.3682	6.8 kOhm	2%, 0.25W, MF	
	R...225	57.11.3393	39 kOhm	2%, 0.25W, MF	
	R...226	57.11.3392	3.9 kOhm	2%, 0.25W, MF	
	R...227	57.11.3563	56 kOhm	2%, 0.25W, MF	
	R...228	57.11.3333	33 kOhm	2%, 0.25W, MF	
	R...229	57.11.3562	5.6 kOhm	2%, 0.25W, MF	
	R...230	57.11.3683	68 kOhm	2%, 0.25W, MF	
	R...231	57.11.3562	5.6 kOhm	2%, 0.25W, MF	
	R...232	57.11.3333	33 kOhm	2%, 0.25W, MF	
	R...233	57.11.3103	10 kOhm	2%, 0.25W, MF	
	R...234	57.11.3271	270 Ohm	2%, 0.25W, MF	
	R...235	57.11.3273	27 kOhm	2%, 0.25W, MF	
	R...236	57.11.3152	1.5 kOhm	2%, 0.25W, MF	
	R...237	57.11.3331	330 Ohm	2%, 0.25W, MF	
	R...238	57.11.3103	10 kOhm	2%, 0.25W, MF	
	R...239	57.11.3103	10 kOhm	2%, 0.25W, MF	
	R...240	57.11.3102	1 kOhm	2%, 0.25W, MF	

AUDIO ELECTRONICS BOARD PBO 1.727.465.83

IND.	POS.NO.	PART NO.	VALUE	SPECIFICATIONS / EQUIVALENT	MANUF.
	R...242	57.11.3472	4.7 kOhm	2%, 0.25W, MF	
	R...243	57.11.3473	47 kOhm	2%, 0.25W, MF	
	R...244	57.11.3102	1 kOhm	2%, 0.25W, MF	
	R...245	57.11.3222	2.2 kOhm	2%, 0.25W, MF	
	R...246	56.01.6302	3 kOhm	10%, 0.5 W, PMG	
	R...247	57.11.3821	820 Ohm	2%, 0.25W, MF	
	R...248	57.11.3392	3.9 kOhm	2%, 0.25W, MF	
	R...249			not used	
	R...250	57.11.3153	15 kOhm	2%, 0.25W, MF	
	R...251	57.11.3473	47 kOhm	2%, 0.25W, MF	
	R...252	57.11.3472	4.7 kOhm	2%, 0.25W, MF	
	R...253	57.11.3472	4.7 kOhm	2%, 0.25W, MF	
	R...254	57.11.3331	330 Ohm	2%, 0.25W, MF	
	R...255	57.11.3102	1 kOhm	2%, 0.25W, MF	
	R...256	57.11.3273	27 kOhm	2%, 0.25W, MF	
	R...257	57.11.3102	1 kOhm	2%, 0.25W, MF	
	R...258	57.11.3471	470 Ohm	2%, 0.25W, MF	
	R...259	57.11.3103	10 kOhm	2%, 0.25W, MF	
	R...260	57.11.3221	220 Ohm	2%, 0.25W, MF	
	R...261	57.11.3122	1.2 kOhm	2%, 0.25W, MF	
	R...262	57.11.3471	470 Ohm	2%, 0.25W, MF	
	R...263	57.11.3223	22 kOhm	2%, 0.25W, MF	
	R...264	57.11.3222	2.2 kOhm	2%, 0.25W, MF	
	R...265	57.11.3473	47 kOhm	2%, 0.25W, MF	
	R...266	57.11.3103	10 kOhm	2%, 0.25W, MF	
	R...267	57.11.3682	6.8 kOhm	2%, 0.25W, MF	
	R...268	57.11.3682	6.8 kOhm	2%, 0.25W, MF	
	R...269	57.11.3103	10 kOhm	2%, 0.25W, MF	
	R...270	57.11.3472	4.7 kOhm	2%, 0.25W, MF	
	R...271	57.11.3122	1.2 kOhm	2%, 0.25W, MF	
	R...272	57.11.3223	22 kOhm	2%, 0.25W, MF	
	R...273	57.11.3223	22 kOhm	2%, 0.25W, MF	
	R...274	57.11.3473	47 kOhm	2%, 0.25W, MF	
	R...275	57.11.3223	22 kOhm	2%, 0.25W, MF	
	R...276	57.11.3103	10 kOhm	2%, 0.25W, MF	
	R...277	57.11.3339	3.3 Ohm	2%, 0.25W, MF	
	R...278	57.11.3103	10 kOhm	2%, 0.25W, MF	

IND.	POS.NO.	PART NO.	VALUE	SPECIFICATIONS / EQUIVALENT	MANUF.
	R...279	57.11.3103	10 kOhm	2%, 0.25W, MF	
	R...280	57.11.3339	3.3 Ohm	2%, 0.25W, MF	
	R...281	57.11.3222	2.2 kOhm	2%, 0.25W, MF	
	R...282	57.11.3222	2.2 kOhm	2%, 0.25W, MF	
	R...283	57.11.3339	3.3 Ohm	2%, 0.25W, MF	
	R...284	57.11.3103	10 kOhm	2%, 0.25W, MF	
	R...285	57.11.3103	10 kOhm	2%, 0.25W, MF	
	R...286	57.11.3339	3.3 Ohm	2%, 0.25W, MF	
	R...287	57.11.3472	4.7 kOhm	2%, 0.25W, MF	
	R...288	57.11.3103	10 kOhm	2%, 0.25W, MF	
	R...289	57.11.3471	470 Ohm	2%, 0.25W, MF	
	R...290	57.11.3391	390 Ohm	2%, 0.25W, MF	
	R...291	57.11.3152	1.5 kOhm	2%, 0.25W, MF	
	R...292	57.92.1151	18 Ohm	150mA, PTC	
	R...293	57.11.3180	18 Ohm	2%, 0.25W, MF	
	R...297	57.11.3472	4.7 kOhm	2%, 0.25W, MF	
	T.....6	1.022.355.00		Line Output Trafo	St
	TP....2	54.02.0320		Plug 2.8*0.8	AMP
	TP....7	54.02.0320		Plug 2.8*0.8	AMP
	W....11	57.11.3000		Wire Bridge	
	XIC..17	53.03.0168	16-Pole	IC Socket	
	XIC..18	53.03.0168	16-Pole	IC Socket	
	XIC..19	53.03.0166	8-Pole	IC Socket	
	XIC..20	53.03.0166	8-Pole	IC Socket	
	XIC..21	53.03.0166	8-Pole	IC Socket	
	XIC..22	53.03.0166	8-Pole	IC Socket	
	XIC..23	53.03.0165	20-Pole	IC Socket	
	XIC..24	53.03.0166	8-Pole	IC Socket	
	XIC..25	53.03.0166	8-Pole	IC Socket	
	XIC..26	53.03.0168	16-Pole	IC Socket	
	XIC..27	53.03.0166	8-Pole	IC Socket	

IND.	POS.NO.	PART NO.	VALUE	SPECIFICATIONS / EQUIVALENT	MANUF.

Cer = Ceramic EL = Electrolytic PETP = Polyester
PP = Polypropylen MF = Metal Film SI = Silicon

MANUFACTURER: ADI = Analog Devices Inc. Mot = Motorola
NS = National Semiconductors Ra = Raytheon
Sig = Signetics St = Studer

ORIG 90/03/12

OUTPUT CONNECTOR (2CH) 1.727.731.00

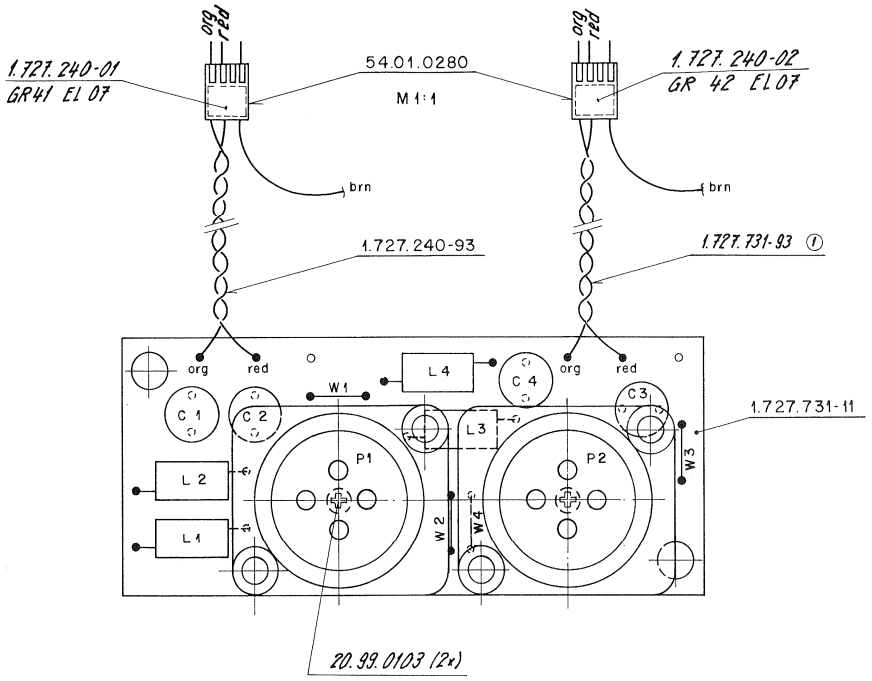

IND.	POS.NO.	PART NO.	VALUE	SPECIFICATIONS / EQUIVALENT	MANUF.
	C.....1	59.05.1221	220 pF	1 % 630V PP	
	C.....2	59.05.1221	220 pF	1 % 630V PP	
	C.....3	59.05.1221	220 pF	1 % 630V PP	
	C.....4	59.05.1221	220 pF	1 % 630V PP	
	L.....1	62.01.0115		Interference Coil, Note 1	Ph
	L.....2	62.01.0115		Interference Coil, Note 1	Ph
	L.....3	62.01.0115		Interference Coil, Note 1	Ph
	L.....4	62.01.0115		Interference Coil, Note 1	Ph
	MP....1	20.99.0103	2 pcs	Screw D 2.2 * 5	
	MP....2	54.01.0280	2 pcs	4-Pole CIS-Case	AMP
	MP....3	1.727.240.01	1 pce	Text Label 'GR41 EL07'	ST
	MP....4	1.727.240.02	1 pce	Text Label 'GR42 EL07'	ST
	MP....5	1.727.240.93	2 pcs	Wiring List	ST
	MP....6	1.727.731.10	1 pce	Nr. Label	ST
	MP....7	1.727.731.11	1 pce	OUTPUT CONNECTOR PCB	ST
	P.....1	54.21.2001		XLR, Male	Neu
	P.....2	54.21.2001		XLR, Male	Neu
	W.....1	1.010.323.64		Wire Bridge	
	W.....2	1.010.323.64		Wire Bridge	
	W.....3	1.010.323.64		Wire Bridge	
	W.....4	1.010.323.64		Wire Bridge	

Note 1: Philips 4312 020 36700

PP= Polypropylen

MANUFACTURER: AMP= AMP, Neu= Neutrik, Ph= Philips, ST= Studer

ORIG 89/03/06

S T U D E R (00) 89/03/06 DS OUTPUT CONNECTOR PL 1.727.731.00 PAGE 1

INPUT CONNECTOR (2CH) 1.727.732.00

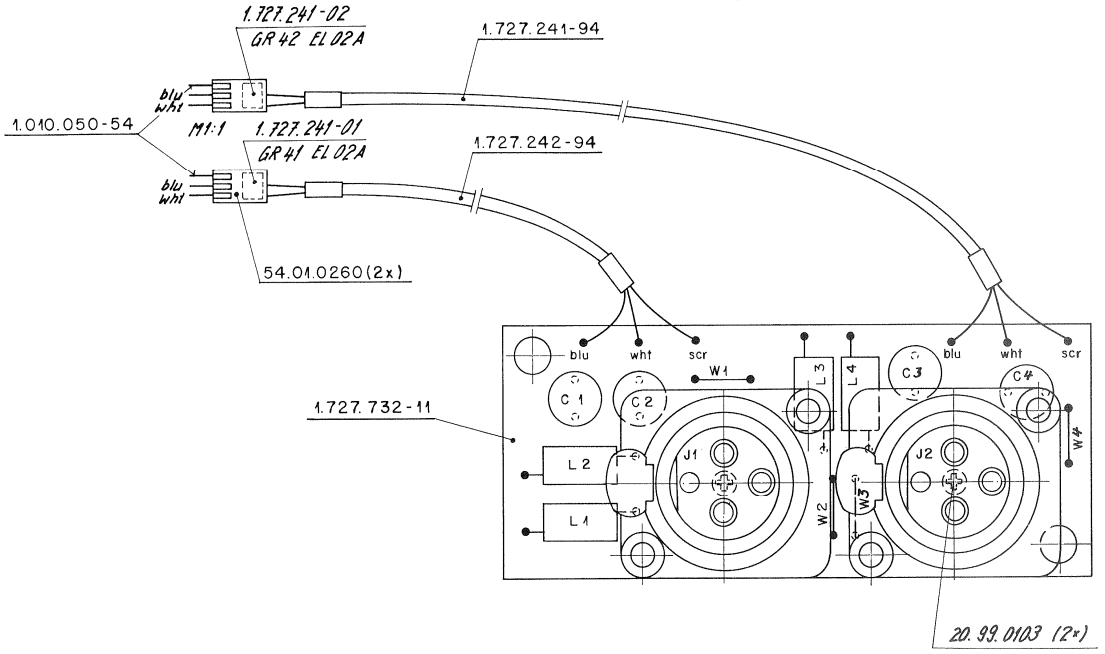

IND.	POS.NO.	PART NO.	VALUE	SPECIFICATIONS / EQUIVALENT	MANUF.
	C.....1	59.05.1221	220 pF	1 % 630V PP	
	C.....2	59.05.1221	220 pF	1 % 630V PP	
	C.....3	59.05.1221	220 pF	1 % 630V PP	
	C.....4	59.05.1221	220 pF	1 % 630V PP	
	J.....1	54.21.2002		XLR, Female	Neu
	J.....2	54.21.2002		XLR, Female	Neu
	L.....1	62.01.0115		Interference Coil, Note 1	Ph
	L.....2	62.01.0115		Interference Coil, Note 1	Ph
	L.....3	62.01.0115		Interference Coil, Note 1	Ph
	L.....4	62.01.0115		Interference Coil, Note 1	Ph
	MP....1	20.99.0103	2 pcs	Screw D 2.2 * 5	
	MP....2	54.01.0260	2 pcs	3-Pole CIS-Case	AMP
	MP....3	1.010.050.54	2 pcs	Single CIS-Pin	AMP
	MP....4	1.727.241.01	1 pce	Text Label 'GR41 EL02A'	ST
	MP....5	1.727.241.02	1 pce	Text Label 'GR42 EL02A'	ST
	MP....6	1.727.241.94	1 pce	Wiring List	ST
	MP....7	1.727.242.94	1 pce	Wiring List	ST
	MP....8	1.727.732.10	1 pce	Nr. Label	ST
	MP....9	1.727.732.11	1 pce	INPUT CONNECTOR PCB	ST
	W.....1	1.010.323.64		Wire Bridge	
	W.....2	1.010.323.64		Wire Bridge	
	W.....3	1.010.323.64		Wire Bridge	
	W.....4	1.010.323.64		Wire Bridge	

Note 1: Philips 4312 020 36700

PP= Polypropylen

MANUFACTURER: AMP= AMP, Neu= Neutrik, Ph= Philips, ST= Studer

ORIG 89/03/06

S T U D E R (00) 89/03/06 DS INPUT CONNECTOR PL 1.727.732.00 PAGE 1

MIC. CONNECTOR (2CH) 1.727.733.00

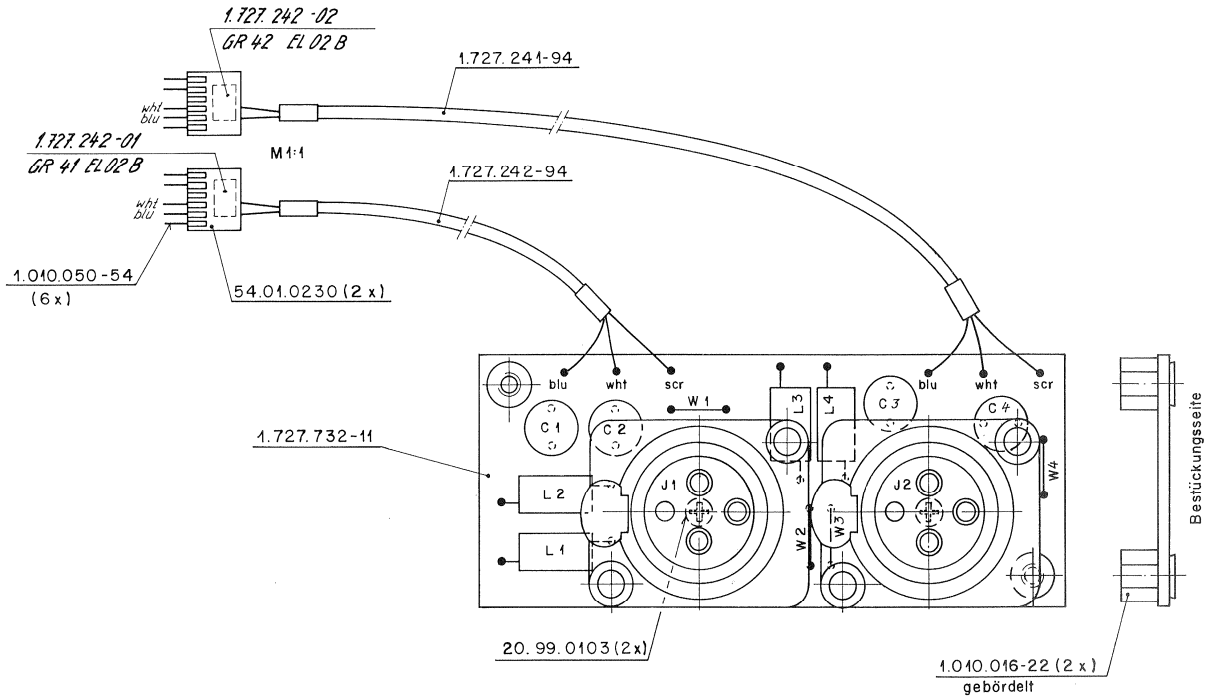

IND.	POS.NO.	PART NO.	VALUE	SPECIFICATIONS / EQUIVALENT	MANUF.
	C.....1	59.05.1221	220 pF	1 % 630V PP	
	C.....2	59.05.1221	220 pF	1 % 630V PP	
	C.....3	59.05.1221	220 pF	1 % 630V PP	
	C.....4	59.05.1221	220 pF	1 % 630V PP	
	J.....1	54.21.2002		XLR/ Female	Neu
	J.....2	54.21.2002		XLR/ Female	Neu
	L.....1	62.01.0115		Interference Coil/ Note 1	Ph
	L.....2	62.01.0115		Interference Coil/ Note 1	Ph
	L.....3	62.01.0115		Interference Coil/ Note 1	Ph
	L.....4	62.01.0115		Interference Coil/ Note 1	Ph
	MP....1	20.99.0103	2 pcs	Screw D 2.2 * 5	
	MP....2	54.01.0230	2 pcs	6-Pole CIS-Case	AMP
	MP....3	1.010.016.22	2 pcs	Rivet M3 * 5.0	ST
	MP....4	1.010.050.54	6 pcs	Single CIS-Pin	AMP
	MP....5	1.727.241.94	1 pce	Wiring List	ST
	MP....6	1.727.242.01	1 pce	Text Label 'GR41 EL02B'	ST
	MP....7	1.727.242.02	1 pce	Text Label 'GR42 EL02B'	ST
	MP....8	1.727.242.94	1 pce	Wiring List	ST
	MP....9	1.727.732.11	1 pce	INPUT CONNECTOR PCB	ST
	MP...10	1.727.733.10	1 pce	Nr. Label	ST
	W.....1	1.010.323.64		Wire Bridge	
	W.....2	1.010.323.64		Wire Bridge	
	W.....3	1.010.323.64		Wire Bridge	
	W.....4	1.010.323.64		Wire Bridge	

Note 1: Philips 4312 020 36700

PP= Polypropylen

MANUFACTURER: AMP= AMP, Neu= Neutrik, Ph= Philips, ST= Studer

ORIG 89/03/06

S T U D E R (00) 89/03/06 DS MIC CONNECTOR PL 1.727.733.00 PAGE 1

TC-INPUT / OUTPUT CONNECTOR 1.727.730.00

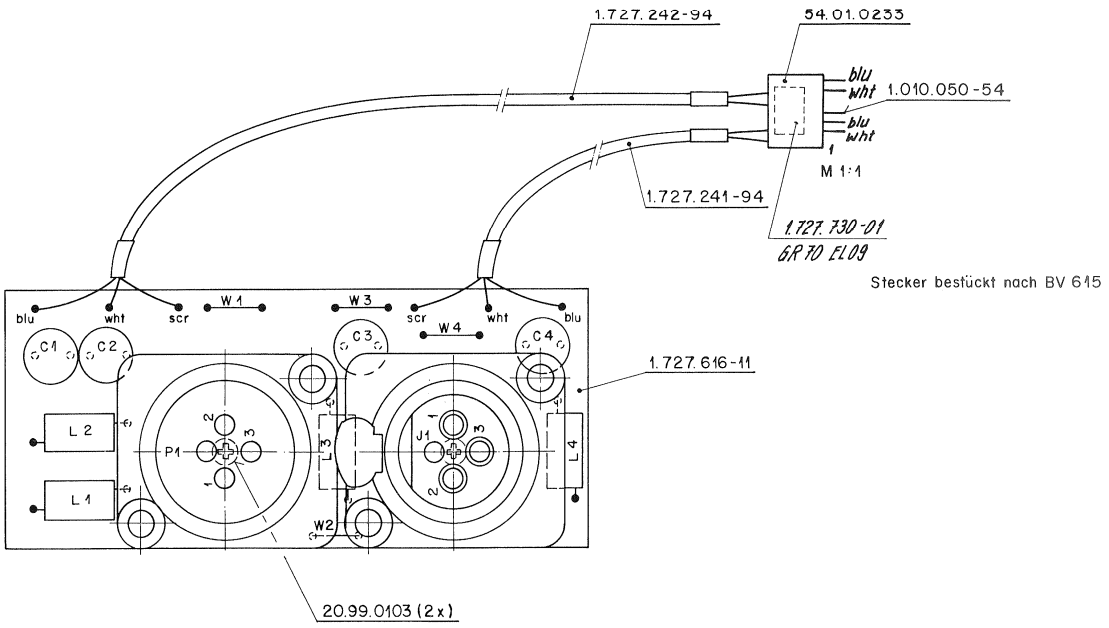

IND.	POS.NO.	PART NO.	VALUE	SPECIFICATIONS / EQUIVALENT	MANUF.
	C.....1	59.05.1221	220 pF	1 % 630V PP	
	C.....2	59.05.1221	220 pF	1 % 630V PP	
	C.....3	59.05.1221	220 pF	1 % 630V PP	
	C.....4	59.05.1221	220 pF	1 % 630V PP	
	J.....1	54.21.2002		XLR, Female	Neu
	L.....1	62.01.0115		Interference Coil, Note 1	Ph
	L.....2	62.01.0115		Interference Coil, Note 1	Ph
	L.....3	62.01.0115		Interference Coil, Note 1	Ph
	L.....4	62.01.0115		Interference Coil, Note 1	Ph
	MP....1	20.99.0103	2 pcs	Screw D 2.2 + 5	
	MP....2	54.01.0233	1 pce	7-Pole CIS-Case	AMP
	MP....3	1.010.050.54	1 pce	Single CIS-Pin	AMP
	MP....4	1.727.241.94	1 pce	Wiring List	ST
	MP....5	1.727.242.94	1 pce	Wiring List	ST
	MP....6	1.727.616.11	1 pce	Line Connector PCB	ST
	MP....7	1.727.730.01	1 pce	Text Label 'GR70 EL09'	ST
	MP....8	1.727.730.10	1 pce	Nr. Label	ST
	P.....1	54.21.2001		XLR, Male	Neu
	W.....1	1.010.323.64		Wire Bridge	
	W.....2	1.010.323.64		Wire Bridge	
	W.....3	1.010.323.64		Wire Bridge	
	W.....4	1.010.323.64		Wire Bridge	

Note 1: Philips 4312 020 36700

PP= Polypropylen

MANUFACTURER: AMP= AMP, Neu= Neutrik, Ph= Philips, ST= Studer

ORIG 89/03/06

S T U D E R (00) 89/03/06 DS TC-INPUT/OUTPUT CONNECTOR PL 1.727.730.00 PAGE 1

AUDIO LINE CONNECTOR (4CH) 1.727.616.00

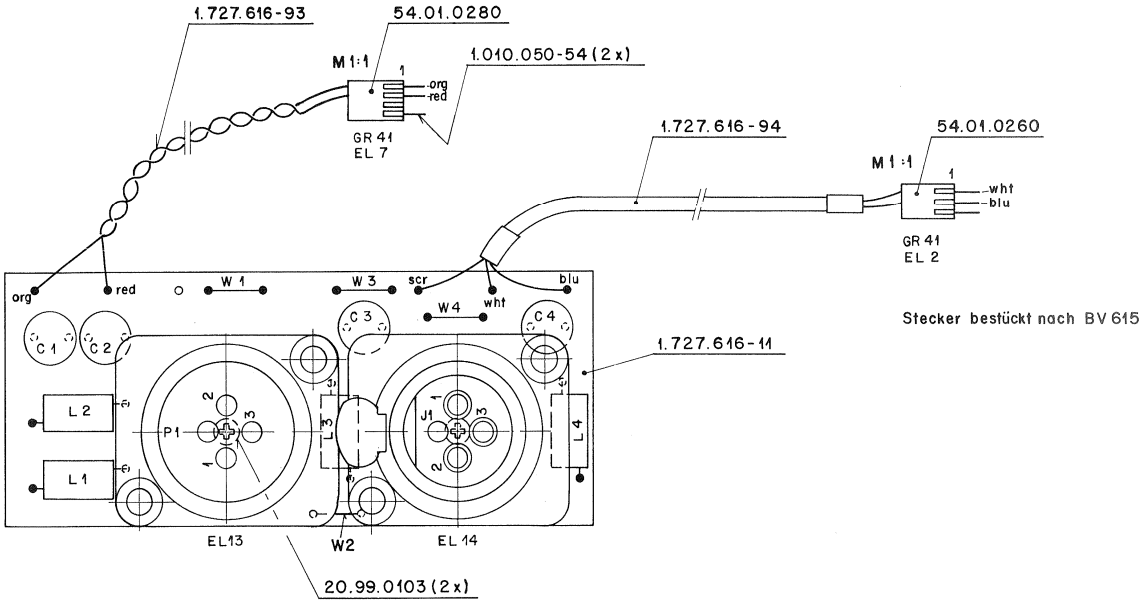

IND.	POS.NO.	PART NO.	VALUE	SPECIFICATIONS / EQUIVALENT	MANUF.
	C.....1	59.05.1221	220 pF	1 % 630V PP	
	C.....2	59.05.1221	220 pF	1 % 630V PP	
	C.....3	59.05.1221	220 pF	1 % 630V PP	
	C.....4	59.05.1221	220 pF	1 % 630V PP	
	J.....1	54.21.2002		XLR, Female	Neu
	L.....1	62.01.0115		Interference Coil, Note 1	Ph
	L.....2	62.01.0115		Interference Coil, Note 1	Ph
	L.....3	62.01.0115		Interference Coil, Note 1	Ph
	L.....4	62.01.0115		Interference Coil, Note 1	Ph
	MP....1	1.727.616.11	1 pce	Line Connector PCB	St
	MP....2	1.727.616.93	1 pce	Li-L Audio Connector	St
	MP....3	1.727.616.94	1 pce	Ka-L Line Connector	St
	MP....4	20.99.0103	2 pcs	Screw D 2.2 x 5	
	MP....5	54.01.0260	1 pce	3-Pole CIS-Case	AMP
	MP....6	54.01.0280	1 pce	4-Pole CIS-Case	AMP
	MP....7	1.010.050.54	2 pcs	Single CIS-Pin	AMP
	MP....8	1.727.616.10	1 pce	Nr. Label	St
	P.....1	54.21.2001		XLR, Male	Neu
	W.....1	1.010.323.64		Wire Bridge	
	W.....2	1.010.323.64		Wire Bridge	
	W.....3	1.010.323.64		Wire Bridge	
	W.....4	1.010.323.64		Wire Bridge	

Note 1: Philips 4312 020 36700

PP=Polypropylen

MANUFACTURER: AMP=AMP, Neu=Neutrik, Ph=Philips, St=Studer

ORIG 88/09/08

S T U D E R (00) 88/09/08 DS AUDIO LINE CONNECTOR PL 1.727.616.00 PAGE 1

LINE INPUT CONNECTOR MONO 1.727.241.00
(DIAGRAM: AUDIO ELECTRONICS PCBs)

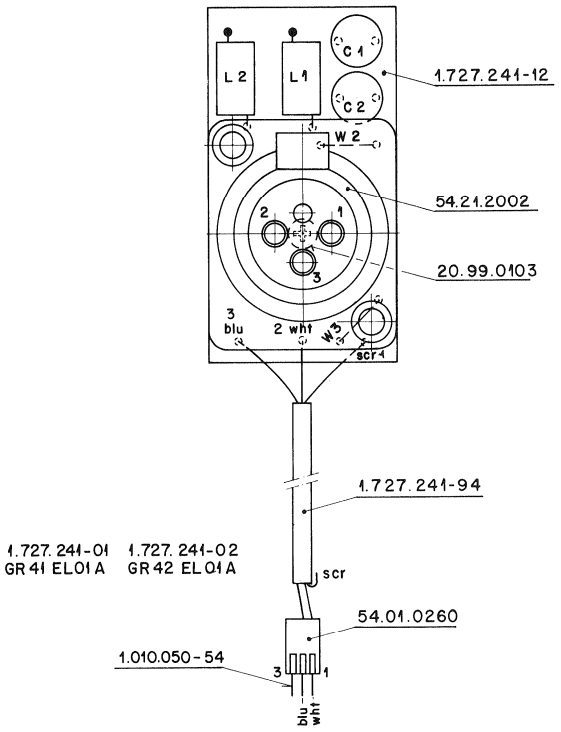

IND.	POS.NO.	PART NO.	VALUE	SPECIFICATIONS / EQUIVALENT	MANUF.
	C.....1	59.05.1221	220 pF	1 % 630V PP	
	C.....2	59.05.1221	220 pF	1 % 630V PP	
	J.....1	54.21.2002		XLR, Female,	Neu
	L.....1	62.01.0115		Interference Coil, Note 1	Ph
	L.....2	62.01.0115		Interference Coil, Note 1	Ph
(00)	MP....1	1.727.241.11	1 pcs	Line Connector PCB	St
(01)	MP....1	1.727.241.12	1 pcs	Line Connector PCB	St
	MP....2	1.727.241.94	1 pcs	KA-L Line Connector	St
	MP....3	20.99.0103	1 pcs	Screw D 2.2 ⌀ 5	
	MP....4	54.01.0260	3 pol	CIS, Case	AMP
	MP....5	1.010.050.54	1 pcs	CIS, Plug	AMP
	MP....6	1.727.241.10	1 pcs	Nr. Label	St
	W.....2	1.010.323.64		Wire Bridge	
	W.....3	1.010.323.64		Wire Bridge	
	.....				

Note 1: Philips 4312 020 36700

PP=Polypropylen,

MANUFACTURER: AMP=AMP, Neu=Neutrik, Ph=Philips, St=Studer

ORIG 86/08/08 (01) 87/02/19

S T U D E R (01) 87/02/19 GP LINE CONNECTOR, FEMALE 1.727.241.00 PAGE 1

LINE OUTPUT CONNECTOR MONO 1.727.240.00
(DIAGRAM: AUDIO ELECTRONICS PCBs)

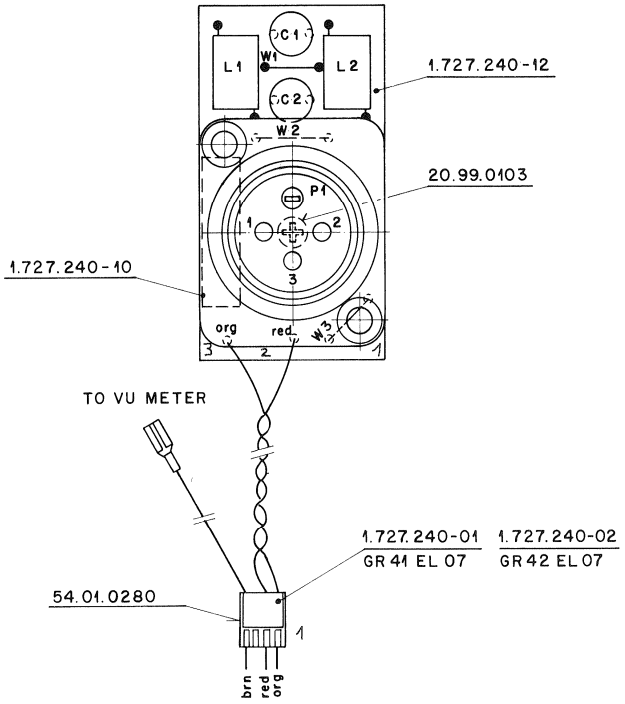

IND.	POS.NO.	PART NO.	VALUE	SPECIFICATIONS / EQUIVALENT	MANUF.
	C.....1	59.05.1221	220 pF	1 % 630V PP	
	C.....2	59.05.1221	220 pF	1 % 630V PP	
	L.....1	62.01.0115		Interference Coil, Note 1	Ph
	L.....2	62.01.0115		Interference Coil, Note 1	Ph
(00)	MP....1	1.727.240.11	1 pcs	Output Connector PCB	St
(01)	MP....1	1.727.240.12	1 pcs	Output Connector PCB	St
	MP....2	1.727.240.93	1 pcs	Li-L Audio Connector	St
	MP....3	20.99.0103	1 pcs	Screw D 2.2 ⌀ 5	
	MP....4	54.01.0280	4 pol	CIS, Case	AMP
	MP....5	1.727.240.10	1 pcs	Nr. Label	St
	P.....1	54.21.2001		XLR, Male	Neu
	W.....1	1.010.323.64		Wire Bridge	
	W.....2	1.010.324.64		Wire Bridge	
	W.....3	1.010.323.64		Wire Bridge	

Note 1: Philips 4312 020 36700

PP=Polypropylen

MANUFACTURER: AMP+AMP, Neu=Neutrik, Ph=Philips, St=Studer

ORIG 86/08/08 (01) 87/02/19

S T U D E R (01) 87/02/19 GP OUTPUT CONNECTOR, MALE 1.727.240.00 PAGE 1

MIC INPUT CONNECTOR MONO 1.727.242.00
(DIAGRAM: AUDIO ELECTRONICS PCBs)

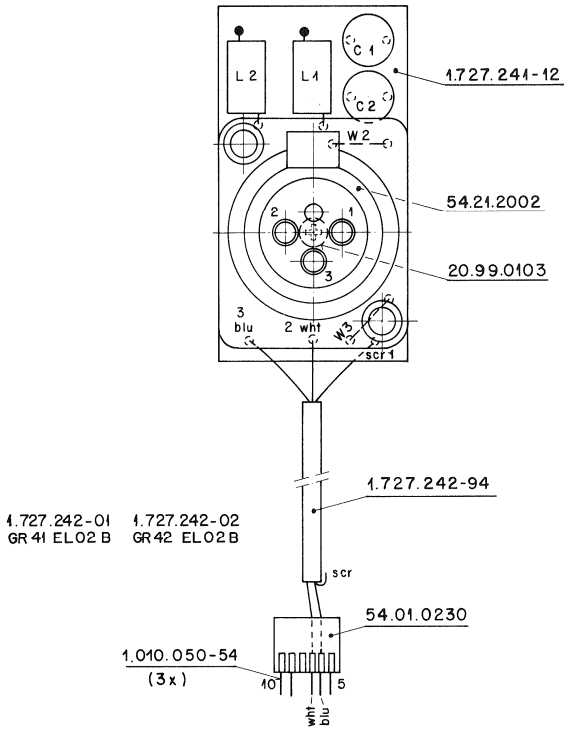

IND.	POS.NO.	PART NO.	VALUE	SPECIFICATIONS / EQUIVALENT	MANUF.
	C.....1	59.05.1221	220 pF	1 % 630V PP	
	C.....2	59.05.1221	220 pF	1 % 630V PP	
	J.....1	54.21.2002		XLR, Female,	Neu
	L.....1	62.01.0115		Interference Coil, Note 1	Ph
	L.....2	62.01.0115		Interference Coil, Note 1	Ph
(00)	MP....1	1.727.241.11	1 pcs	Mic Connector PCB	St
(01)	MP....1	1.727.241.12	1 pcs	Mic Connector PCB	St
	MP....2	1.727.242.94	1 pcs	KA-L Mic Connector	St
	MP....3	20.99.0103	1 pcs	Screw D 2.2 * 5	
	MP....4	54.01.0230	6 pol	CIS, Case	AMP
	MP....5	1.010.050.54	3 pcs	CIS, Plug	AMP
	MP....6	1.727.242.10	1 pcs	Nr. Label	St
	W.....2	1.010.323.64		Wire Bridge	
	W.....3	1.010.323.64		Wire Bridge	
( )	.....				

Note 1: Philips 4312 020 36700

PP=Polypropylen,

MANUFACTURER:AMP=AMP, Neu=Neutrik, Ph= Philips, St=Studer

ORIG 86/08/08 (01) 87/02/19

S T U D E R (01) 87/02/19 GP MIC CONNECTOR, FEMALE 1.727.242.00 PAGE 1

MONO / STEREO SWITCH BLOCK DIAGRAM (2CH) 1.727.440.00

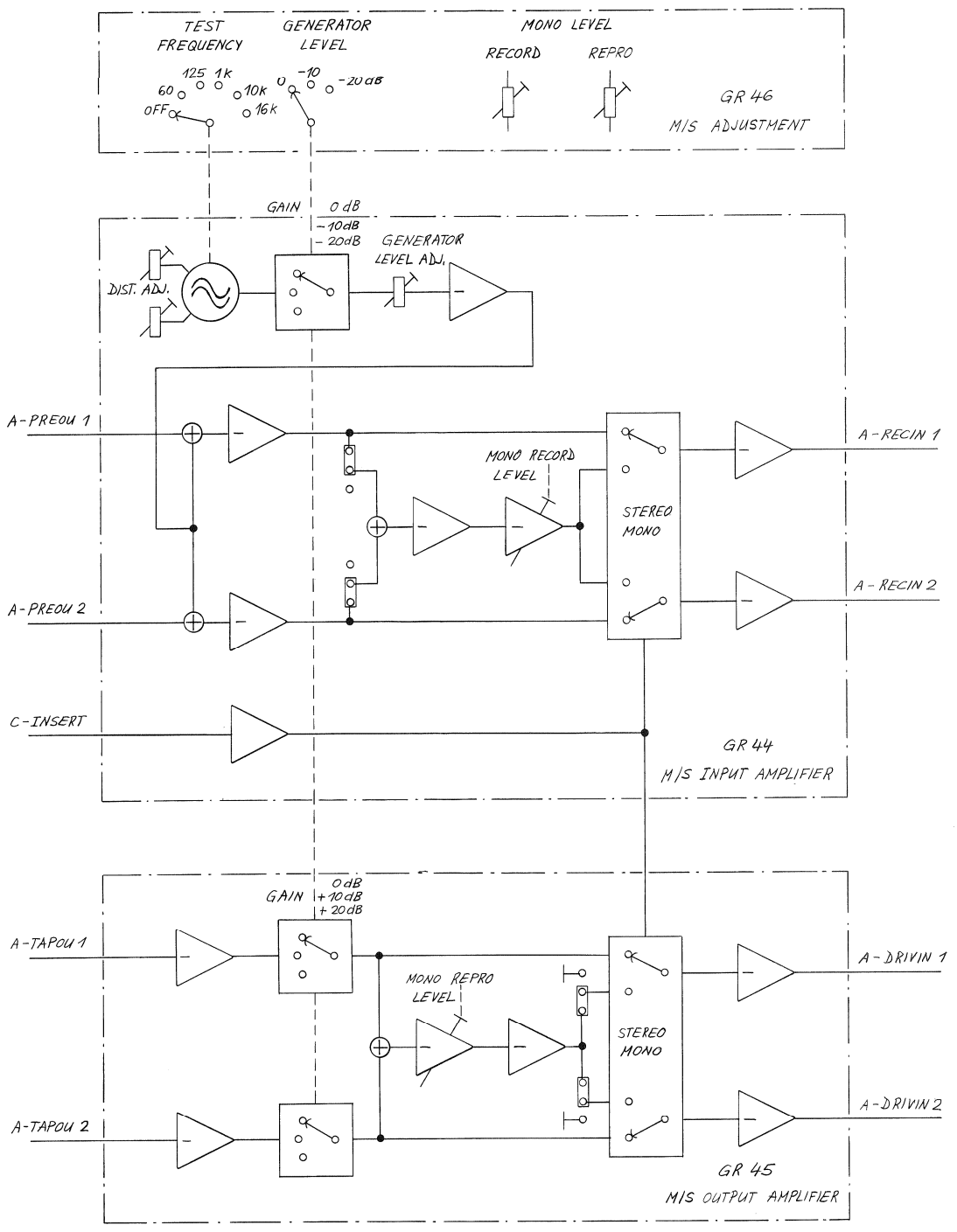

0 27.2.87 GP	. .	. .	. .	. .
	A 807			PAGE 1 OF 2
STUDER	MONO / STEREO SWITCH BLOCK DIAGRAM			1.727.440.00

SET: MONO / STEREO SWITCH (2CH) 1.727.440.00

M/S INPUT AMPLIFIER PCB 1.727.441
M/S INPUT AMPLIFIER PCB 1.727.451

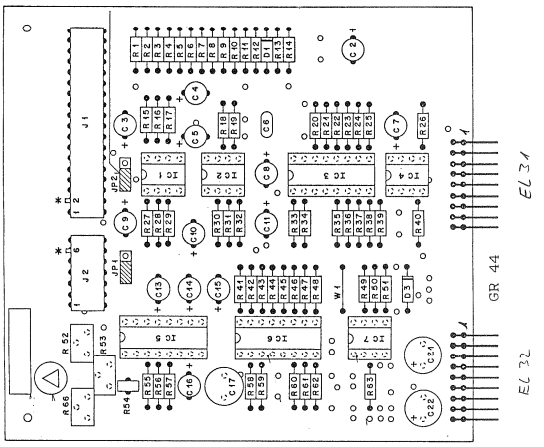

M/S OUTPUT AMPLIFIER PCB 1.727.442
M/S OUTPUT AMPLIFIER PCB 1.727.452

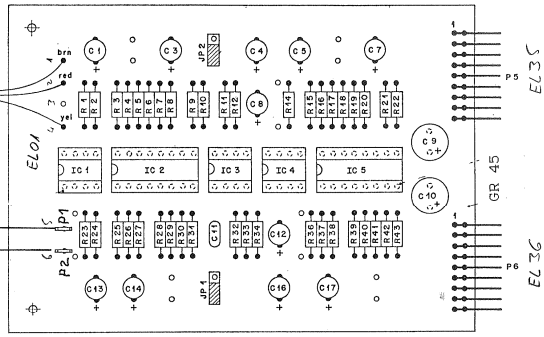

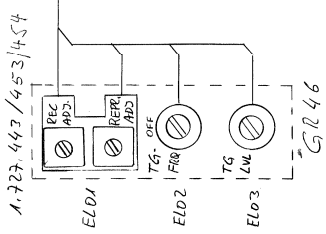

SET	ORDER No.
MONO/STEREO SWITCH SET WITH TEST GENERATOR INCLUDED: 1.727.441.00 M/S INPUT AMPLIFIER 1.727.442.00 M/S OUTPUT AMPLIFIER 1.727.443.00 M/S ADJUSTMENT	1.727.440.00
MONO/STEREO SWITCH SET WITHOUT TEST GENERATOR INCLUDED: 1.727.451.00 M/S INPUT AMPLIFIER 1.727.442.00 M/S OUTPUT AMPLIFIER 1.727.453.00 M/S ADJUSTMENT	1.727.450.00
MONO/STEREO SWITCH SET FOR PBO VERSION INCLUDED: 1.727.452.00 M/S OUTPUT AMPLIFIER 1.727.454.00 M/S ADJUSTMENT	1.727.455.00

0 26.03.87 WH.	17.9.87 WH	. .	. .	. .
	A 807			PAGE 2 OF 2
STUDER	MONO/STEREO SWITCH SET			1.727.440.00

MONO / STEREO INPUT AMPLIFIER WITH TEST GENERATOR (2CH) 1.727.441.00

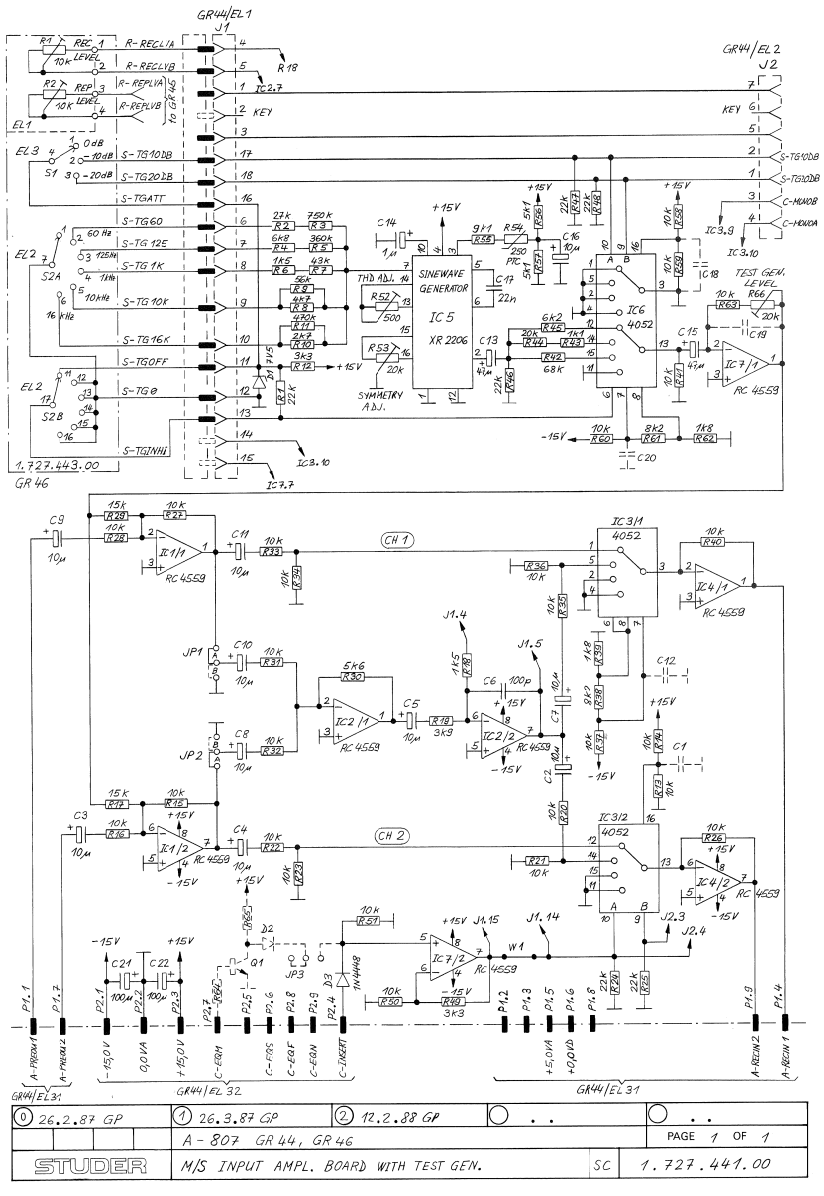

0 26.2.87 GP	1 26.3.87 GP	2 12.2.88 GP	. .	. .
	A-807 GR 44, GR 46			PAGE 1 OF 1
STUDER	M/S INPUT AMPL. BOARD WITH TEST GEN.		SC	1.727.441.00

MONO / STEREO INPUT AMPLIFIER WITH TEST GENERATOR (2CH) 1.727.441.00

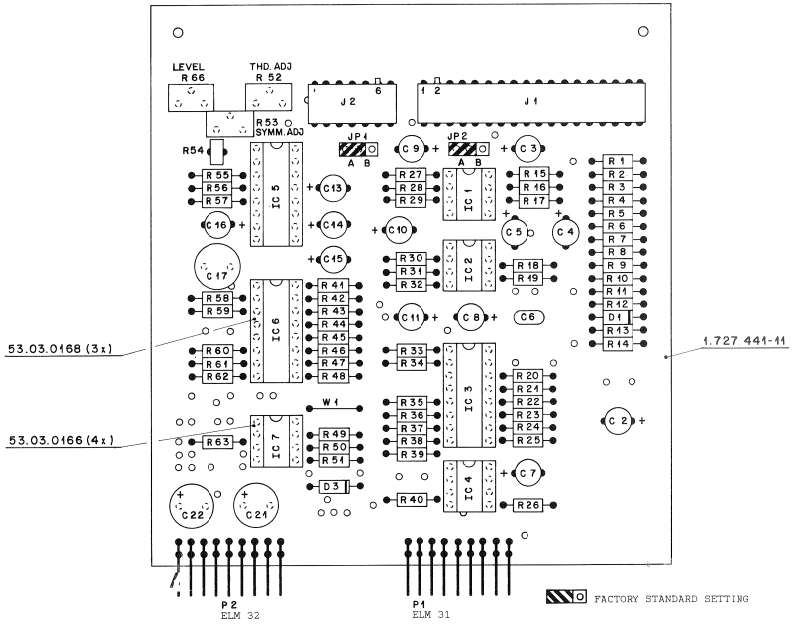

JP1: A = INPUT SIGNAL FROM CH1 ON
B = INPUT SIGNAL FROM CH1 OFF

JP2: A = INPUT SIGNAL FROM CH2 ON
B = INPUT SIGNAL FROM CH2 OFF

R52 = THD ADJUSTMENT
R53 = SYMMETRY ADJUSTMENT
R66 = TEST GENERATOR LEVEL

IND.	POS.NO.	PART NO.	VALUE	SPECIFICATIONS / EQUIVALENT	MANUF.
	C.....1			not used	
	C.....2	59.22.6100	10 uF	-20% 35V EL	
	C.....3	59.22.6100	10 uF	-20% 35V EL	
	C.....4	59.22.6100	10 uF	-20% 35V EL	
	C.....5	59.22.6100	10 uF	-20% 35V EL	
	C.....6	59.34.4101	100 pF	10% 50V Cer	
	C.....7	59.22.6100	10 uF	-20% 35V EL	
	C.....8	59.22.6100	10 uF	-20% 35V EL	
	C.....9	59.22.6100	10 uF	-20% 35V EL	
	C.....10	59.22.6100	10 uF	-20% 35V EL	
	C.....11	59.22.6100	10 uF	-20% 35V EL	
	C.....12			not used	
	C.....13	59.22.3470	47 uF	-20% 10V EL	
	C.....14	59.22.6109	1 uF	-20% 35V EL	
	C.....15	59.22.3470	47 uF	-20% 10V EL	
	C.....16	59.22.6100	10 uF	-20% 35V EL	
	C.....17	59.05.1223	22 nF	1% 50V PP	
	C.....18			not used	
	C.....19			not used	
	C.....20			not used	
	C.....21	59.22.5101	100 uF	-20% 25V EL	
	C.....22	59.22.5101	100 uF	-20% 25V EL	
	D.....1	50.04.1103	Z-Diode	7.5V	
	D.....2			not used	
	D.....3	50.04.0125	1N4448	75V	
	IC....1	50.09.0107	RC 4559	Dual Op. Amp.	
	IC....2	50.09.0107	RC 4559	Dual Op. Amp.	
	IC....3	50.07.0824	MC 14052	CMOS AMUX	Mot
	IC....4	50.09.0107	RC 4559	Dual Op. Amp.	Ra
	IC....5	50.11.0108	XR 2206CP	Function Gen.	Ex
	IC....6	50.07.0824	MC 14052	CMOS AMUX	Mot
	IC....7	50.09.0107	RC 4559	Dual Op. Amp.	
	J.....1	54.01.0247	18-Pole	CIS Socket Strip	AMP
	J.....2	54.01.0244	7-Pole	CIS Socket Strip	AMP

IND.	POS.NO.	PART NO.	VALUE	SPECIFICATIONS / EQUIVALENT	MANUF.
	JP....1	54.01.0021		Bridge	
	JP....2	54.01.0021		Bridge	
	JP....3			not used	
	MP....1	1.727.441.10	0 pcs	Nom Label	St
	MP....2	1.727.441.11	1 pcs	Input Ampl. PCB	St
	MP....3	54.01.0020	3 pcs	Contact Pin JP1	
	MP....4	54.01.0020	3 pcs	Contact Pin JP2	
	MP....5	43.01.0108	1 pcs	ESE Warning Label	
	P.....1	54.01.0220	9-Pole	CIS Pin Strip	AMP
	P.....2	54.01.0220	9-Pole	CIS Pin Strip	AMP
	Q.....1			not used	
	R.....1	57.11.3223	22 kOhm	1% 0.25W. MF	
	R.....2	57.11.3273	27 kOhm	1% 0.25W. MF	
	R.....3	57.11.3754	750 kOhm	1% 0.25W. MF	
	R.....4	57.11.3682	6.8 kOhm	1% 0.25W. MF	
	R.....5	57.11.3364	360 kOhm	1% 0.25W. MF	
	R.....6	57.11.3152	1.5 kOhm	1% 0.25W. MF	
	R.....7	57.11.3433	43 kOhm	1% 0.25W. MF	
	R.....8	57.11.3472	4.7 kOhm	1% 0.25W. MF	
	R.....9	57.11.3563	56 kOhm	1% 0.25W. MF	
	R.....10	57.11.3272	2.7 kOhm	1% 0.25W. MF	
	R.....11	57.11.3474	470 kOhm	1% 0.25W. MF	
	R.....12	57.11.3332	3.3 kOhm	1% 0.25W. MF	
	R.....13	57.11.3103	10 kOhm	1% 0.25W. MF	
	R.....14	57.11.3103	10 kOhm	1% 0.25W. MF	
	R.....15	57.11.3103	10 kOhm	1% 0.25W. MF	
	R.....16	57.11.3103	10 kOhm	1% 0.25W. MF	
	R.....17	57.11.3153	15 kOhm	1% 0.25W. MF	
(90)	R.....18	57.11.3222	2.2 kOhm	1% 0.25W. MF	
(01)	R.....18	57.11.3152	1.5 kOhm	1% 0.25W. MF	
	R.....19	57.11.3392	3.9 kOhm	1% 0.25W. MF	
	R.....20	57.11.3103	10 kOhm	1% 0.25W. MF	
	R.....21	57.11.3103	10 kOhm	1% 0.25W. MF	

IND.	POS.NO.	PART NO.	VALUE	SPECIFICATIONS / EQUIVALENT	MANUF.
	R.....22	57.11.3103	10 kOhm	1% 0.25W. MF	
	R.....23	57.11.3103	10 kOhm	1% 0.25W. MF	
	R.....24	57.11.3223	22 kOhm	1% 0.25W. MF	
	R.....25	57.11.3223	22 kOhm	1% 0.25W. MF	
	R.....26	57.11.3103	10 kOhm	1% 0.25W. MF	
	R.....27	57.11.3103	10 kOhm	1% 0.25W. MF	
	R.....28	57.11.3103	10 kOhm	1% 0.25W. MF	
	R.....29	57.11.3153	15 kOhm	1% 0.25W. MF	
	R.....30	57.11.3562	5.6 kOhm	1% 0.25W. MF	
	R.....31	57.11.3103	10 kOhm	1% 0.25W. MF	
	R.....32	57.11.3103	10 kOhm	1% 0.25W. MF	
	R.....33	57.11.3103	10 kOhm	1% 0.25W. MF	
	R.....34	57.11.3103	10 kOhm	1% 0.25W. MF	
	R.....35	57.11.3103	10 kOhm	1% 0.25W. MF	
	R.....36	57.11.3103	10 kOhm	1% 0.25W. MF	
	R.....37	57.11.3103	10 kOhm	1% 0.25W. MF	
	R.....38	57.11.3622	6.2 kOhm	1% 0.25W. MF	
	R.....39	57.11.3182	1.8 kOhm	1% 0.25W. MF	
	R.....40	57.11.3103	10 kOhm	1% 0.25W. MF	
	R.....41	57.11.3103	10 kOhm	1% 0.25W. MF	
	R.....42	57.11.3683	68 kOhm	1% 0.25W. MF	
	R.....43	57.11.3122	1.2 kOhm	1% 0.25W. MF	
	R.....44	57.11.3203	20 kOhm	1% 0.25W. MF	
	R.....45	57.11.3622	6.2 kOhm	1% 0.25W. MF	
	R.....46	57.11.3223	22 kOhm	1% 0.25W. MF	
	R.....47	57.11.3223	22 kOhm	1% 0.25W. MF	
	R.....48	57.11.3223	22 kOhm	1% 0.25W. MF	
	R.....49	57.11.3332	3.3 kOhm	1% 0.25W. MF	
	R.....50	57.11.3103	10 kOhm	1% 0.25W. MF	
	R.....51	57.11.3103	10 kOhm	1% 0.25W. MF	
	R.....52	58.01.9101	500 Ohm	10% 0.5W.Pcerm	
	R.....53	58.01.9203	20 kOhm	10% 0.5W.Pcerm	
	R.....54	57.99.0216	250 Ohm	PTC Resistor	
	R.....55	57.11.3912	9.1 kOhm	1% 0.25W. MF	
	R.....56	57.11.3512	5.1 kOhm	1% 0.25W. MF	
	R.....57	57.11.3512	5.1 kOhm	1% 0.25W. MF	
	R.....58	57.11.3103	10 kOhm	1% 0.25W. MF	

IND.	POS.NO.	PART NO.	VALUE	SPECIFICATIONS / EQUIVALENT	MANUF.
	R.....59	57.11.3103	10 kOhm	1% 0.25W. MF	
	R.....60	57.11.3103	10 kOhm	1% 0.25W. MF	
	R.....61	57.11.3822	8.2 kOhm	1% 0.25W. MF	
	R.....62	57.11.3182	1.8 kOhm	1% 0.25W. MF	
	R.....63	57.11.3103	10 kOhm	1% 0.25W. MF	
	R.....64			not used	
	R.....65			not used	
	R.....66	58.01.9203	20 kOhm	10% 0.5W.Pcerm	
	W.....1	64.01.0106		Wire Bridge	
	XIC...1	53.03.0166	8-Pole	IC Socket	
	XIC...2	53.03.0166	8-Pole	IC Socket	
	XIC...3	53.03.0168	16-Pole	IC Socket	
	XIC...4	53.03.0166	8-Pole	IC Socket	
	XIC...5	53.03.0168	16-Pole	IC Socket	
	XIC...6	53.03.0168	16-Pole	IC Socket	
	XIC...7	53.03.0166	8-Pole	IC Socket	

(01) LZ.02.88 Extended range of gain.

EL=Electrolytic,Cer=Ceramic,Pcerm=Cermet,MF=Metal Film,PP=Polypropylen
MANUFACTURER:AMP=Amp,Exar=Exar,Mot=Motorola,St=Studer

ORIG 87/02/26 (01) 88/02/12

MONO / STEREO OUTPUT AMPLIFIER BOARD (2CH) 1.727.442.00

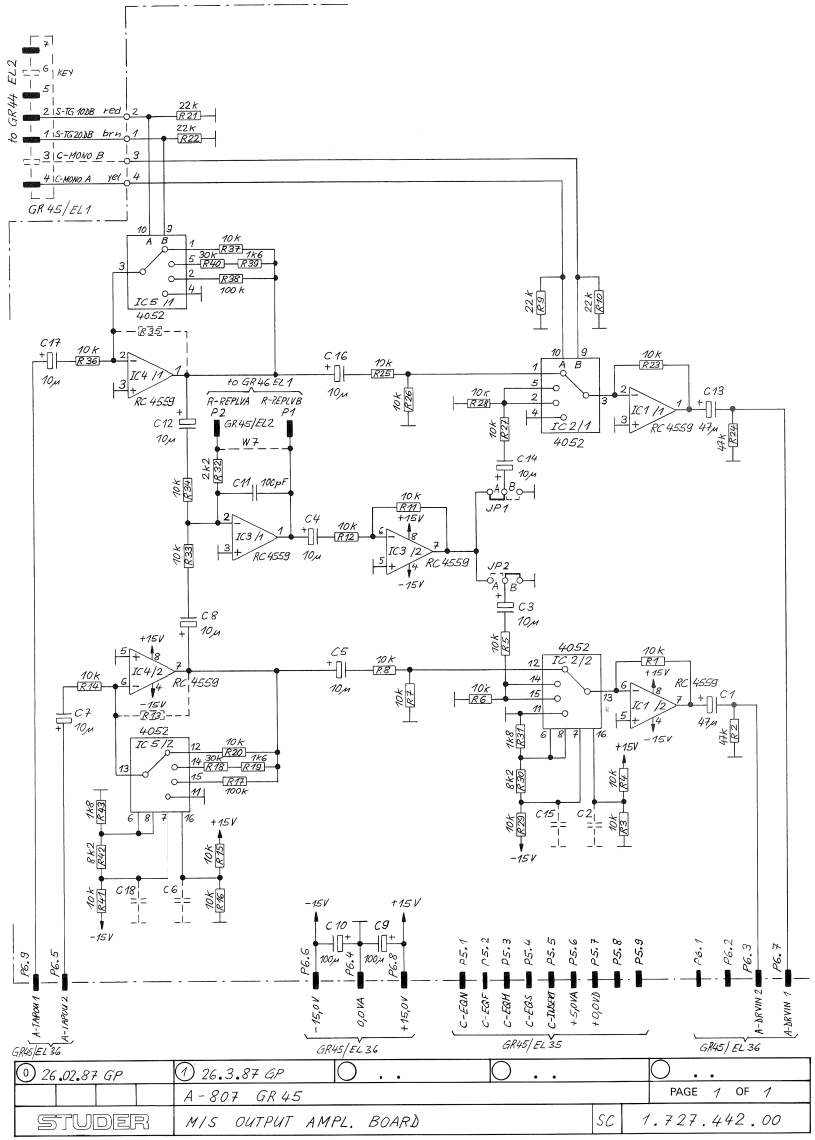

0 26.02.87 GP	1 26.3.87 GP	. .	. .	. .
	A-807 GR 45			PAGE 1 OF 1
STUDER	M/S OUTPUT AMPL. BOARD		SC	1.727.442.00

MONO / STEREO OUTPUT AMPLIFIER BOARD (2CH) 1.727.442.00

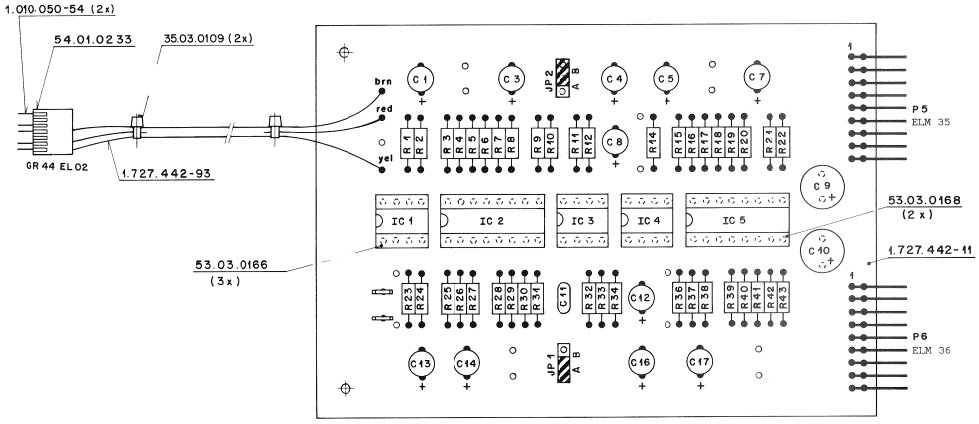

FACTORY STANDARD SETTING

JP1: A = MONO OUTPUT SIGNAL PRESENT ON CH1
B = NO MONO OUTPUT SIGNAL ON CH1

JP2: A = MONO OUTPUT SIGNAL PRESENT ON CH2
B = NO MONO OUTPUT SIGNAL ON CH2

IND.	POS.NO.	PART NO.	VALUE	SPECIFICATIONS / EQUIVALENT	MANUF.
	C....1	59.22.3470	47 uF	-20% 10V EL	
	C....2			not used	
	C....3	59.22.6100	10 uF	-20% 35V EL	
	C....4	59.22.6100	10 uF	-20% 35V EL	
	C....5	59.22.6100	10 uF	-20% 35V EL	
	C....6			not used	
	C....7	59.22.6100	10 uF	-20% 35V EL	
	C....8	59.22.6100	10 uF	-20% 35V EL	
	C....9	59.22.5101	100 uF	-20% 25V EL	
	C....10	59.22.5101	100 uF	-20% 25V EL	
	C....11	59.34.5101	100 pF	10% 50V Cer	
	C....12	59.22.6100	10 uF	-20% 35V EL	
	C....13	59.22.3470	47 uF	-20% 10V EL	
	C....14	59.22.6100	10 uF	-20% 35V EL	
	C....15			not used	
	C....16	59.22.6100	10 uF	-20% 35V EL	
	C....17	59.22.6100	10 uF	-20% 35V EL	
	C....18			not used	
	IC....1	50.09.0107	RC 4559	Dual Op. Amp.	
	IC....2	50.07.0024	MC 14052	CMOS AMUX	Mot
	IC....3	50.09.0107	RC 4559	Dual Op. Amp.	
	IC....4	50.09.0107	RC 4559	Dual Op. Amp.	
	IC....5	50.07.0024	MC 14052	CMOS AMUX	Mot
	JP....1	54.01.0021		Bridge	
	JP....2	54.01.0021		Bridge	
	MP....1	1.727.442.10	0 pcs	No. Label	St
	MP....2	1.727.442.93	1 pcs	Wiring List	St
	MP....3	1.727.442.11	1 pcs	Output Ampl. PCB	St
	MP....4	54.01.0020	3 pcs	Contact Pin JP1	
	MP....5	54.01.0020	3 pcs	Contact Pin JP2	
	MP....6	54.01.0233	1 pcs	7-Pole Cis Pin Case	AMP
	MP....7	43.01.0108	1 pcs	ESE Warning Label	
	MP....8	1.727.442.01	0 pcs	Text Label	

IND.	POS.NO.	PART NO.	VALUE	SPECIFICATIONS / EQUIVALENT	MANUF.
(01)	P....1	54.02.0320	2.8*0.8	Contact pin	AMP
(01)	P....2	54.02.0320	2.8*0.8	Contact pin	AMP
(00)	P....5	54.01.0223	7-Pole	CIS Pin Strip	AMP
(01)	P....5	54.01.0220	9-Pole	CIS Pin Strip	AMP
(00)	P....6	54.01.0223	7-Pole	CIS Pin Strip	AMP
(01)	P....6	54.01.0220	9-Pole	CIS Pin Strip	AMP
	R....1	57.11.4103	10 kOhm	2%, 0.25W, MF	
	R....2	57.11.4473	47 kOhm	2%, 0.25W, MF	
	R....3	57.11.4103	10 kOhm	2%, 0.25W, MF	
	R....4	57.11.4103	10 kOhm	2%, 0.25W, MF	
	R....5	57.11.4103	10 kOhm	2%, 0.25W, MF	
	R....6	57.11.4103	10 kOhm	2%, 0.25W, MF	
	R....7	57.11.4103	10 kOhm	2%, 0.25W, MF	
	R....8	57.11.4103	10 kOhm	2%, 0.25W, MF	
	R....9	57.11.4223	22 kOhm	2%, 0.25W, MF	
	R....10	57.11.4223	22 kOhm	2%, 0.25W, MF	
	R....11	57.11.4103	10 kOhm	2%, 0.25W, MF	
	R....12	57.11.4103	10 kOhm	2%, 0.25W, MF	
	R....13			not used	
	R....14	57.11.3103	10 kOhm	1%, 0.25W, MF	
	R....15	57.11.4103	10 kOhm	2%, 0.25W, MF	
	R....16	57.11.4103	10 kOhm	2%, 0.25W, MF	
	R....17	57.11.3104	100 kOhm	1%, 0.25W, MF	
	R....18	57.11.3303	30 kOhm	1%, 0.25W, MF	
	R....19	57.11.3162	1.6 kOhm	1%, 0.25W, MF	
	R....20	57.11.3103	10 kOhm	1%, 0.25W, MF	
	R....21	57.11.4223	22 kOhm	2%, 0.25W, MF	
	R....22	57.11.4223	22 kOhm	2%, 0.25W, MF	
	R....23	57.11.4103	10 kOhm	2%, 0.25W, MF	
	R....24	57.11.4473	47 kOhm	2%, 0.25W, MF	
	R....25	57.11.4103	10 kOhm	2%, 0.25W, MF	
	R....26	57.11.4103	10 kOhm	2%, 0.25W, MF	
	R....27	57.11.4103	10 kOhm	2%, 0.25W, MF	
	R....28	57.11.4103	10 kOhm	2%, 0.25W, MF	
	R....29	57.11.4103	10 kOhm	2%, 0.25W, MF	
	R....30	57.11.4822	8.2 kOhm	2%, 0.25W, MF	

IND.	POS.NO.	PART NO.	VALUE	SPECIFICATIONS / EQUIVALENT	MANUF.
	R....31	57.11.4182	1.8 kOhm	2%, 0.25W, MF	
	R....32	57.11.4222	2.2 kOhm	2%, 0.25W, MF	
	R....33	57.11.4103	10 kOhm	2%, 0.25W, MF	
	R....34	57.11.4103	10 kOhm	2%, 0.25W, MF	
	R....35			not used	
	R....36	57.11.3103	10 kOhm	1%, 0.25W, MF	
	R....37	57.11.3103	10 kOhm	1%, 0.25W, MF	
	R....38	57.11.3104	100 kOhm	1%, 0.25W, MF	
	R....39	57.11.3162	1.6 kOhm	1%, 0.25W, MF	
	R....40	57.11.3303	30 kOhm	1%, 0.25W, MF	
	R....41	57.11.4103	10 kOhm	2%, 0.25W, MF	
	R....42	57.11.4822	8.2 kOhm	2%, 0.25W, MF	
	R....43	57.11.4182	1.8 kOhm	2%, 0.25W, MF	
	W....7			not used	
	XIC....1	53.03.0166	8-Pole	IC Socket	
	XIC....2	53.03.0168	16-Pole	IC Socket	
	XIC....3	53.03.0166	8-Pole	IC Socket	
	XIC....4	53.03.0166	8-Pole	IC Socket	
	XIC....5	53.03.0168	16-Pole	IC Socket	

EL=Electrolytic, Cer=Ceramic, MF=Metal Film
MANUFACTURER: AMP, Mot=Motorola, St=Studer

ORIG 87/02/26 (01) 87/03/26

MONO / STEREO ADJUSTMENT UNIT WITH GENERATOR (2CH) 1.727.443.00

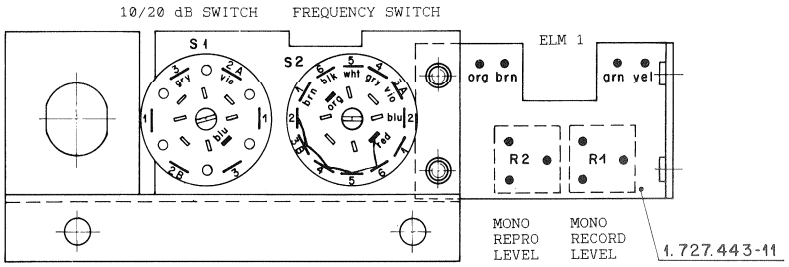

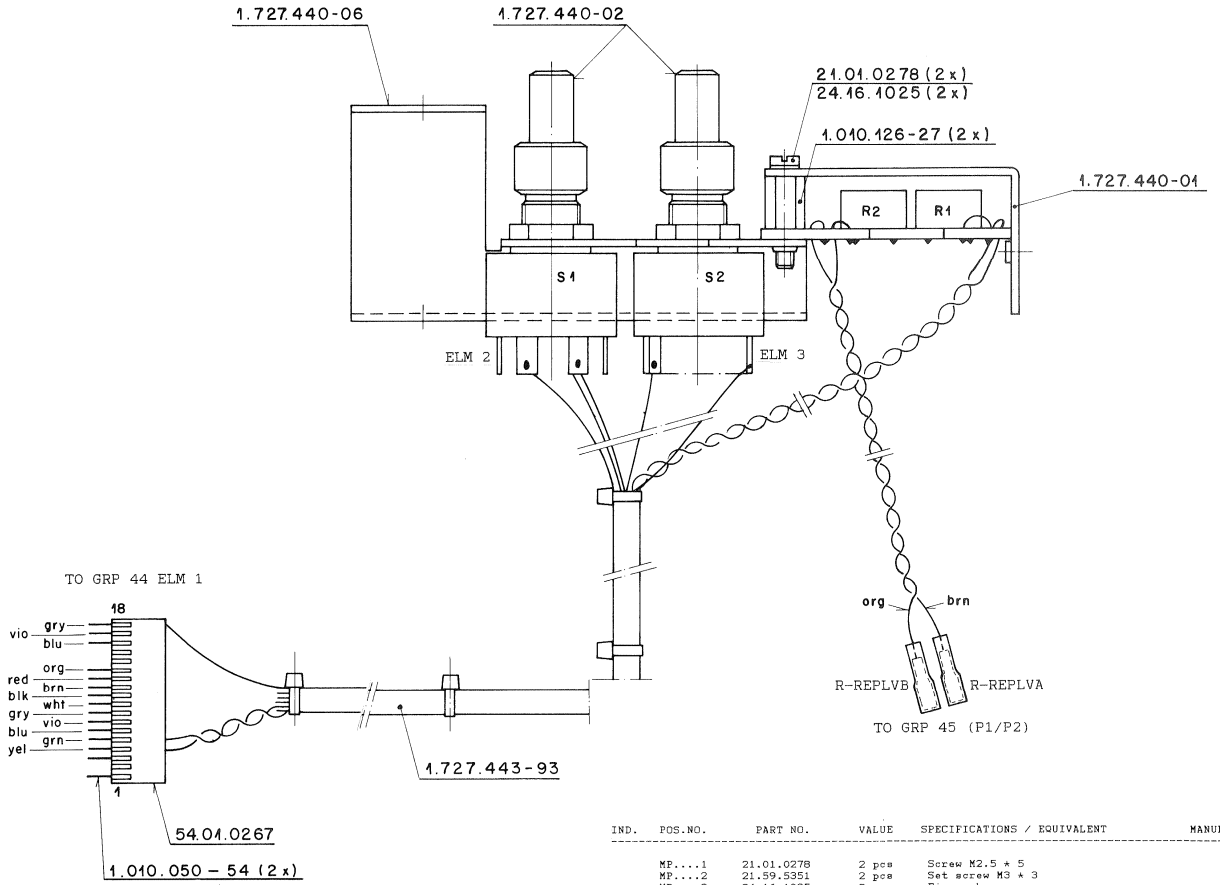

IND.	POS.NO.	PART NO.	VALUE	SPECIFICATIONS / EQUIVALENT	MANUF.
	MP....1	21.01.0278	2 pcs	Screw M2.5 * 5	
	MP....2	21.59.5351	2 pcs	Set screw M3 * 3	
	MP....3	24.16.1025	2 pcs	Fin washer	
	MP....4	54.01.0267	1 pcs	18-pole Cis Pin Case	AMP
	MP....5	1.010.126.27	2 pcs	Screw bolt	St
	MP....6	1.727.440.01	1 pcs	Cover sheet	St
	MP....7	1.727.440.02	2 pcs	Button	St
	MP....8	1.727.440.03	0 pcs	Text label, RECORD LVL	St
	MP....9	1.727.440.04	0 pcs	Text label, REPROD.LVL	St
	MP...10	1.727.440.06	1 pcs	Jack chassis	St
	MP...11	1.727.443.01	0 pcs	Text label	St
	MP...12	1.727.443.10	0 pcs	No. label	St
	MP...13	1.727.443.11	1 pcs	M/S Adjustment PCB	St
	MP...14	1.727.443.93	1 pcs	Wiring list	St
	R.....1	58.01.8103	10 kOhm	10%, 0.5 W, PCerm	
	R.....2	58.01.8103	10 kOhm	10%, 0.5 W, PCerm	
	S.....1	55.01.0220	2 * 3	Rotation switch	EL
	S.....2	55.13.0027	2 * 6	Rotation switch	EL

MANUFACTURER:AMP, EL=ELMA, St=Studer

ORIG 87/03/03

S T U D E R (00) 87/03/03 GP M/S ADJUSTMENT UNIT W.T.GEN. PL 1.727.443.00 PAGE 1

MONO / STEREO SWITCH BLOCK DIGAGRAM (2CH) 1.727.450.00

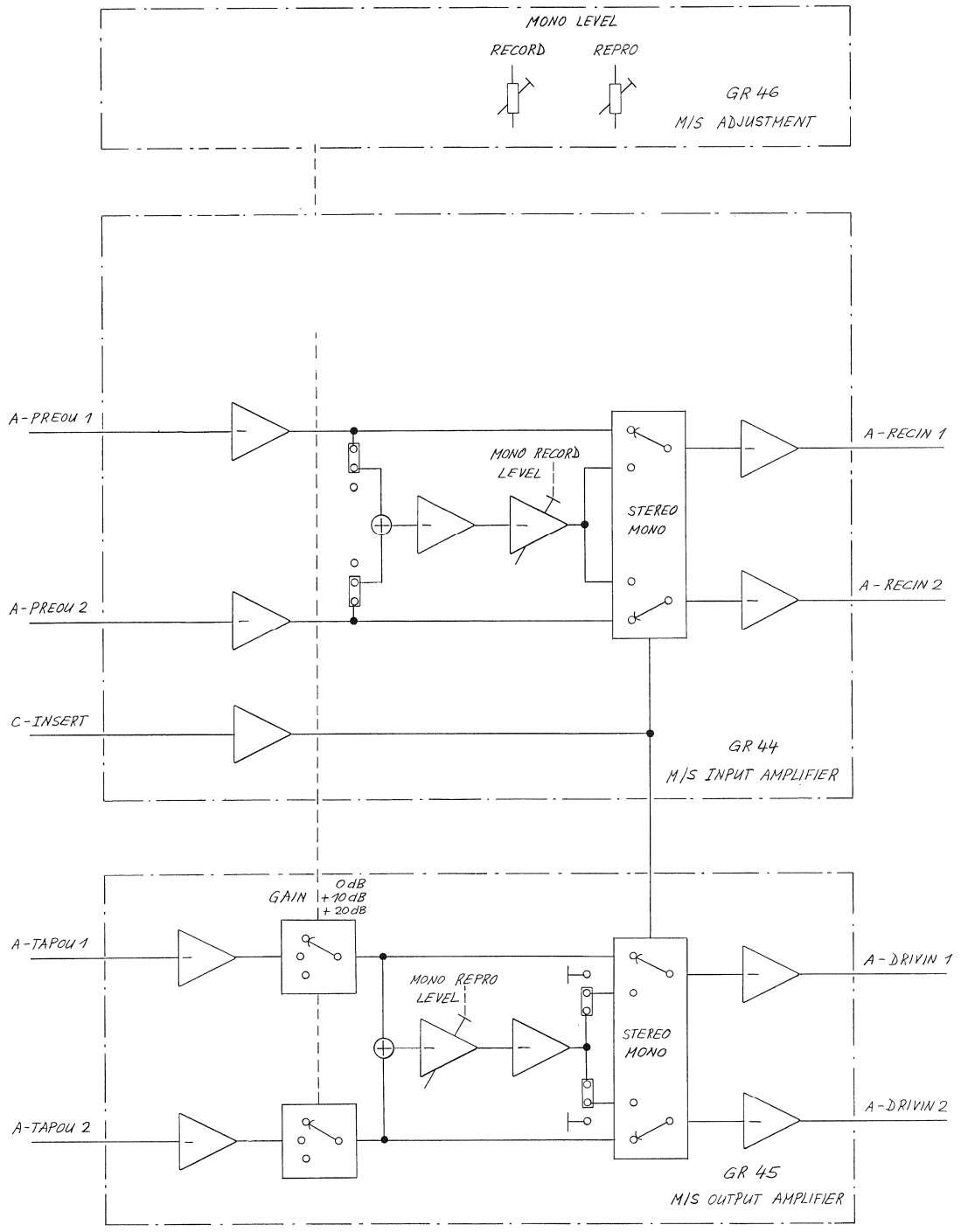

0 27.2.87 GP	. .	. .	. .	. .
	A 807			PAGE 1 OF 1
STUDER	MONO / STEREO SWITCH BLOCK DIAGRAM			1.727.450.00

MONO / STEREO INPUT AMPLIFIER BOARD (2CH) 1.727.451.00

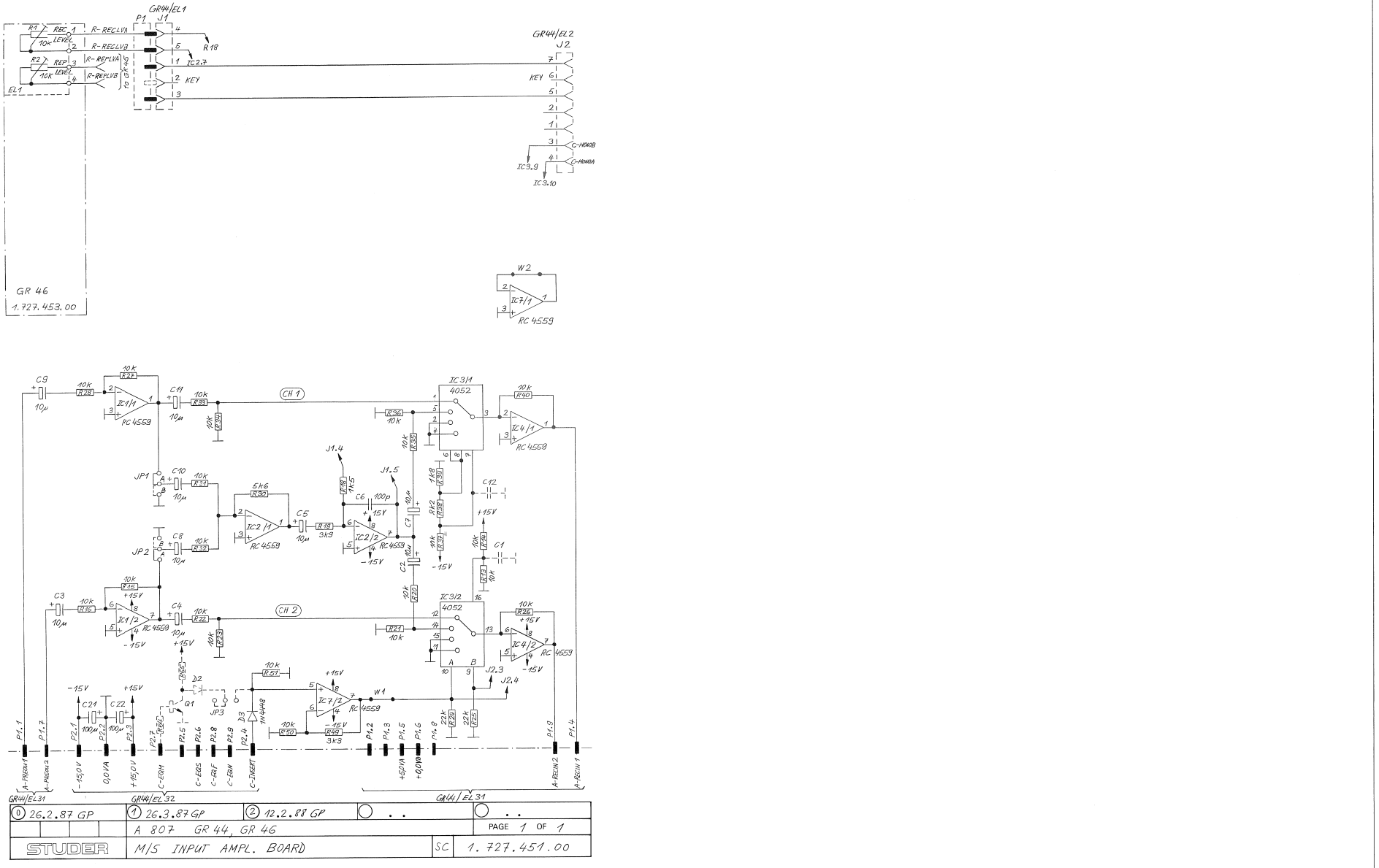

0 26.2.87 GP	1 26.3.87 GP	2 12.2.88 GP	. .	. .
	A 807 GR 44, GR 46			PAGE 1 OF 1
STUDER	M/S INPUT AMPL. BOARD		SC	1.727.451.00

MONO / STEREO INPUT AMPLIFIER BOARD (2CH) 1.727.451.00

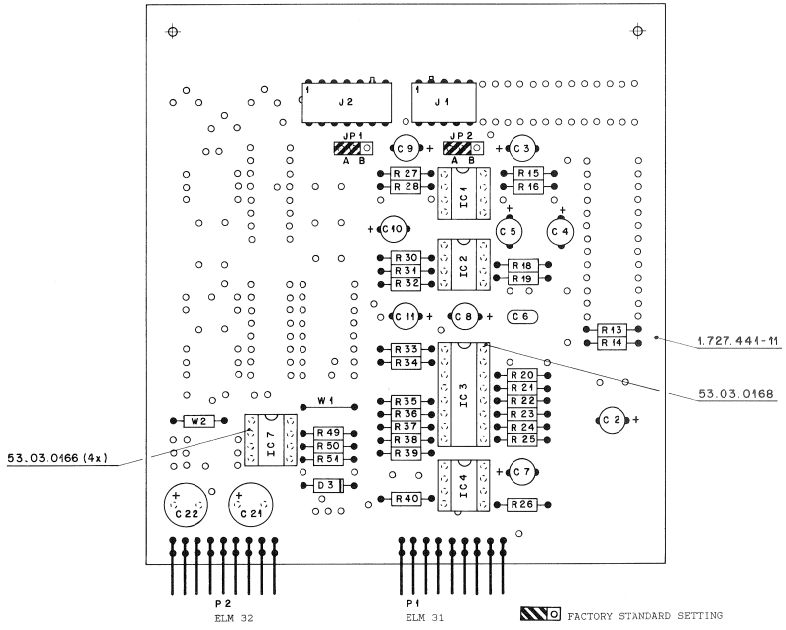

ELM 32 ELM 31

FACTORY STANDARD SETTING

JP1: A = INPUT SIGNAL FROM CH1 ON
B = INPUT SIGNAL FROM CH1 OFF

JP2: A = INPUT SIGNAL FROM CH2 ON
B = INPUT SIGNAL FROM CH2 OFF

IND.	POS.NO.	PART NO.	VALUE	SPECIFICATIONS / EQUIVALENT	MANUF.
	C.....2	59.22.6100	10 uF	-20% 35V EL	
	C.....3	59.22.6100	10 uF	-20% 35V EL	
	C.....4	59.22.6100	10 uF	-20% 35V EL	
	C.....5	59.22.6100	10 uF	-20% 35V EL	
	C.....6	59.34.4101	100 pF	10% 50V Cer	
	C.....7	59.22.6100	10 uF	-20% 35V EL	
	C.....8	59.22.6100	10 uF	-20% 35V EL	
	C.....9	59.22.6100	10 uF	-20% 35V EL	
	C.....10	59.22.6100	10 uF	-20% 35V EL	
	C.....11	59.22.6100	10 uF	-20% 35V EL	
	C.....21	59.22.5101	100 uF	-20% 25V EL	
	C.....22	59.22.5101	100 uF	-20% 25V EL	
	D.....3	50.04.0125	1N4448	75V	
	IC....1	50.09.0107	RC 4559	Dual Op. Amp.	
	IC....2	50.09.0107	RC 4559	Dual Op. Amp.	
	IC....3	50.07.0024	MC 14052	CMOS aMUX	Mot
	IC....4	50.09.0107	RC 4559	Dual Op. Amp.	Ra
	IC....7	50.09.0107	RC 4559	Dual Op. Amp.	
	J.....1	54.01.0305	5-Pole	CIS Socket Strip	AMP
	J.....2	54.01.0244	7-Pole	CIS Socket Strip	AMP
	JP....1	54.01.0021		Bridge	
	JP....2	54.01.0021		Bridge	
	MP....1	1.727.451.10	0 pcs	No. Label	St
	MP....2	1.727.441.11	1 pcs	Input Ampl. PCB	St
	MP....3	54.01.0020	3 pcs	Contact Pin JP1	
	MP....4	54.01.0020	3 pcs	Contact Pin JP2	
	MP....5	43.01.0108	1 pcs	ESE Warning Label	
	P.....1	54.01.0220	9-Pole	CIS Pin Strip	AMP
	P.....2	54.01.0220	7-Pole	CIS Pin Strip	AMP
	R....13	57.11.3103	10 kOhm	1% 0.25W+ MF	

IND.	POS.NO.	PART NO.	VALUE	SPECIFICATIONS / EQUIVALENT	MANUF.
	R....14	57.11.3103	10 kOhm	1% 0.25W+ MF	
	R....15	57.11.3103	10 kOhm	1% 0.25W+ MF	
	R....16	57.11.3103	10 kOhm	1% 0.25W+ MF	
(00)	R....18	57.11.3222	2.2 kOhm	1% 0.25W+ MF	
(01)	R....18	57.11.3152	1.5 kOhm	1% 0.25W+ MF	
	R....19	57.11.3392	3.9 kOhm	1% 0.25W+ MF	
	R....20	57.11.3103	10 kOhm	1% 0.25W+ MF	
	R....21	57.11.3103	10 kOhm	1% 0.25W+ MF	
	R....22	57.11.3103	10 kOhm	1% 0.25W+ MF	
	R....23	57.11.3103	10 kOhm	1% 0.25W+ MF	
	R....24	57.11.3223	22 kOhm	1% 0.25W+ MF	
	R....25	57.11.3223	22 kOhm	1% 0.25W+ MF	
	R....26	57.11.3103	10 kOhm	1% 0.25W+ MF	
	R....27	57.11.3103	10 kOhm	1% 0.25W+ MF	
	R....28	57.11.3103	10 kOhm	1% 0.25W+ MF	
	R....30	57.11.3562	5.6 kOhm	1% 0.25W+ MF	
	R....31	57.11.3103	10 kOhm	1% 0.25W+ MF	
	R....32	57.11.3103	10 kOhm	1% 0.25W+ MF	
	R....33	57.11.3103	10 kOhm	1% 0.25W+ MF	
	R....34	57.11.3103	10 kOhm	1% 0.25W+ MF	
	R....35	57.11.3103	10 kOhm	1% 0.25W+ MF	
	R....36	57.11.3103	10 kOhm	1% 0.25W+ MF	
	R....37	57.11.3103	10 kOhm	1% 0.25W+ MF	
	R....38	57.11.3822	8.2 kOhm	1% 0.25W+ MF	
	R....39	57.11.3182	1.8 kOhm	1% 0.25W+ MF	
	R....40	57.11.3103	10 kOhm	1% 0.25W+ MF	
	R....49	57.11.3332	3.3 kOhm	1% 0.25W+ MF	
	R....50	57.11.3103	10 kOhm	1% 0.25W+ MF	
	R....51	57.11.3103	10 kOhm	1% 0.25W+ MF	
	W.....1	64.01.0106		Wire Bridge	
	W.....2	57.11.4000		Wire Bridge	
	XIC...1	53.03.0166	8-Pole	IC Socket	
	XIC...2	53.03.0166	8-Pole	IC Socket	
	XIC...3	53.03.0168	16-Pole	IC Socket	
	XIC...4	53.03.0166	8-Pole	IC Socket	

IND.	POS.NO.	PART NO.	VALUE	SPECIFICATIONS / EQUIVALENT	MANUF.
	XIC...7	53.03.0166	8-Pole	IC Socket	

(01) 12.02.88 Extended range of gain.

EL=Electrolytic,Cer=Ceramic,Pcerm=Cermet,MF=Metal Film,PP=Polypropylen
MANUFACTURER:AMP,Exar,Mot=Motorola,St=Studer

ORIG 87/02/26 (01) 88/02/12

MONO / STEREO OUTPUT AMPLIFIER BOARD (2CH) 1.727.452.00

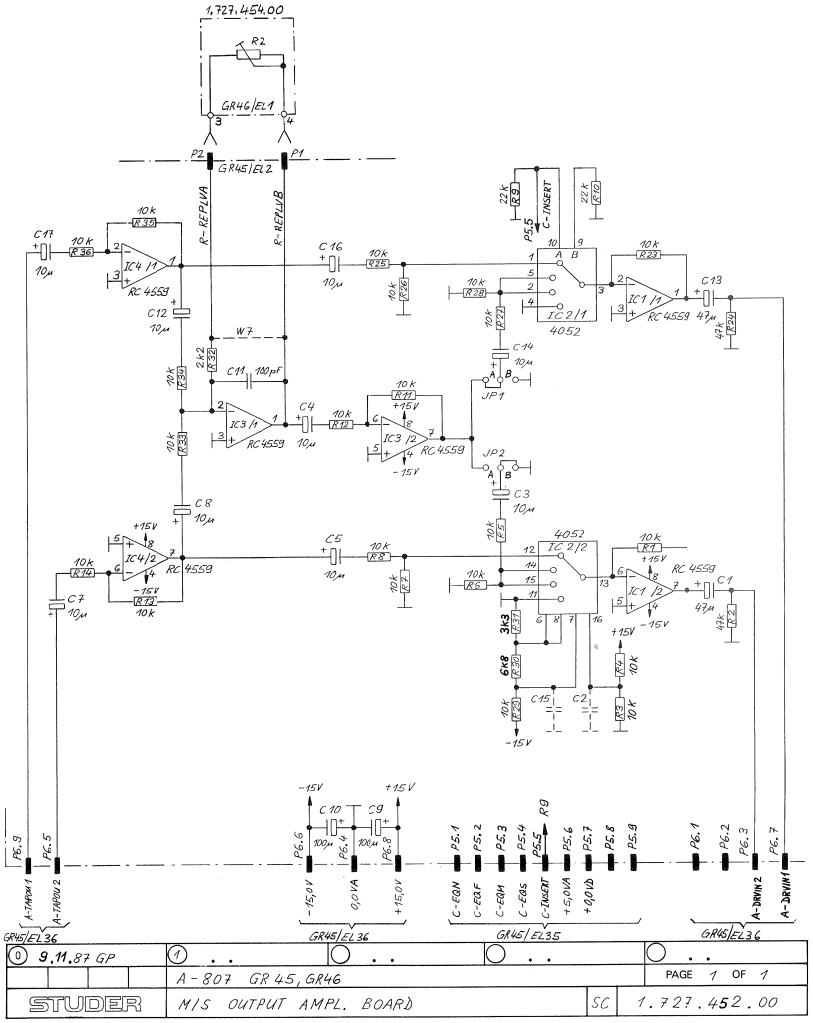

MONO / STEREO OUTPUT AMPLIFIER BOARD (2CH) 1.727.452.00

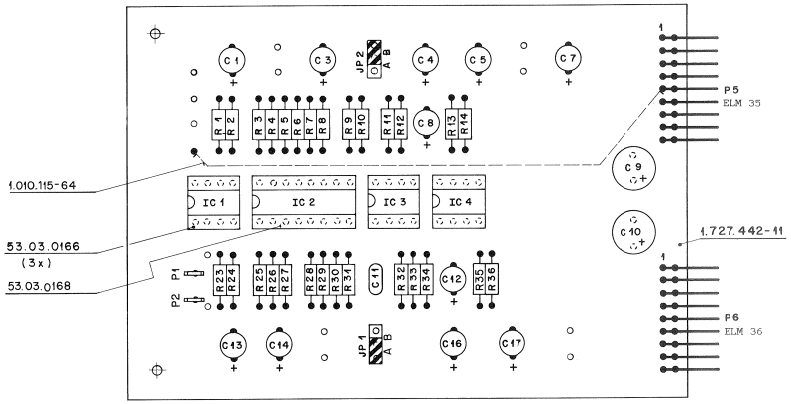

FACTORY STANDARD SETTING

JP1: A = MONO OUTPUT SIGNAL PRESENT ON CH1
B = NO MONO OUTPUT SIGNAL ON CH1

JP2: A = MONO OUTPUT SIGNAL PRESENT ON CH2
B = NO MONO OUTPUT SIGNAL ON CH2

IND.	POS.NO.	PART NO.	VALUE	SPECIFICATIONS / EQUIVALENT	MANUF.
	C.....1	59.22.3470	47 uF	-20% 10V EL	
	C.....2			not used	
	C.....3	59.22.6100	10 uF	-20% 35V EL	
	C.....4	59.22.6100	10 uF	-20% 35V EL	
	C.....5	59.22.6100	10 uF	-20% 35V EL	
	C.....7	59.22.6100	10 uF	-20% 35V EL	
	C.....8	59.22.6100	10 uF	-20% 35V EL	
	C.....9	59.22.5101	100 uF	-20% 25V EL	
	C.....10	59.22.5101	100 uF	-20% 25V EL	
	C.....11	59.34.4101	100 pF	10% 50V Cer	
	C.....12	59.22.6100	10 uF	-20% 35V EL	
	C.....13	59.22.3470	47 uF	-20% 10V EL	
	C.....14	59.22.6100	10 uF	-20% 35V EL	
	C.....15			not used	
	C.....16	59.22.6100	10 uF	-20% 35V EL	
	C.....17	59.22.6100	10 uF	-20% 35V EL	
	IC.....1	50.09.0107	RC 4559	Dual Op. Amp.	
	IC.....2	50.07.0024	MC 14052	CMOS AMUX	Mot
	IC.....3	50.09.0107	RC 4559	Dual Op. Amp.	
	IC.....4	50.09.0107	RC 4559	Dual Op. Amp.	
	JP.....1	54.01.0021		Bridge	
	JP.....2	54.01.0021		Bridge	
	MP.....1	1.727.452.10	0 pcs	No. Label	St
	MP.....2	1.010.115.64	150 mm	Wire	
	MP.....3	1.727.442.11	1 pcs	Output Ampl. PCB	St
	MP.....4	54.01.0020	3 pcs	Contact Pin JP1	
	MP.....5	54.01.0020	3 pcs	Contact Pin JP2	
	MP.....7	43.01.0108	1 pcs	ESE Warning Label	
	P.....1	54.02.0320	2+8+8	Contact pin	AMP
	P.....2	54.02.0320	2+8+8	Contact pin	AMP
	P.....5	54.01.0220	9-Pole	CIS Pin Strip	AMP
	P.....6	54.01.0220	9-Pole	CIS Pin Strip	AMP

IND.	POS.NO.	PART NO.	VALUE	SPECIFICATIONS / EQUIVALENT	MANUF.
	R.....1	57.11.4103	10 kOhm	2% 0.25W MF	
	R.....2	57.11.4473	47 kOhm	2% 0.25W MF	
	R.....3	57.11.4103	10 kOhm	2% 0.25W MF	
	R.....4	57.11.4103	10 kOhm	2% 0.25W MF	
	R.....5	57.11.4103	10 kOhm	2% 0.25W MF	
	R.....6	57.11.4103	10 kOhm	2% 0.25W MF	
	R.....7	57.11.4103	10 kOhm	2% 0.25W MF	
	R.....8	57.11.4103	10 kOhm	2% 0.25W MF	
	R.....9	57.11.4223	22 kOhm	2% 0.25W MF	
	R.....10	57.11.4223	22 kOhm	2% 0.25W MF	
	R.....11	57.11.4103	10 kOhm	2% 0.25W MF	
	R.....12	57.11.4103	10 kOhm	2% 0.25W MF	
	R.....13	57.11.4103	10 kOhm	2% 0.25W MF	
	R.....14	57.11.4103	10 kOhm	2% 0.25W MF	
	R.....23	57.11.4103	10 kOhm	2% 0.25W MF	
	R.....24	57.11.4473	47 kOhm	2% 0.25W MF	
	R.....25	57.11.4103	10 kOhm	2% 0.25W MF	
	R.....26	57.11.4103	10 kOhm	2% 0.25W MF	
	R.....27	57.11.4103	10 kOhm	2% 0.25W MF	
	R.....28	57.11.4103	10 kOhm	2% 0.25W MF	
	R.....29	57.11.4103	10 kOhm	2% 0.25W MF	
	R.....30	57.11.4682	6.8 kOhm	2% 0.25W MF	
	R.....31	57.11.4332	3.3 kOhm	2% 0.25W MF	
	R.....32	57.11.4222	2.2 kOhm	2% 0.25W MF	
	R.....33	57.11.4103	10 kOhm	2% 0.25W MF	
	R.....34	57.11.4103	10 kOhm	2% 0.25W MF	
	R.....35	57.11.4103	10 kOhm	2% 0.25W MF	
	R.....36	57.11.4103	10 kOhm	2% 0.25W MF	
	R.....7			not used	
	XIC.....1	53.03.0166	8-Pole	IC Socket	
	XIC.....2	53.03.0168	16-Pole	IC Socket	
	XIC.....3	53.03.0166	8-Pole	IC Socket	
	XIC.....4	53.03.0166	8-Pole	IC Socket	

IND.	POS.NO.	PART NO.	VALUE	SPECIFICATIONS / EQUIVALENT	MANUF.

EL=Electrolytic,Cer=Ceramic,MF=Metal Film
MANUFACTURER:AMP,Mot=Motorola,St=Studer

ORIG 87/11/09

MONO / STEREO ADJUSTMENT UNIT (2CH) 1.727.453.00

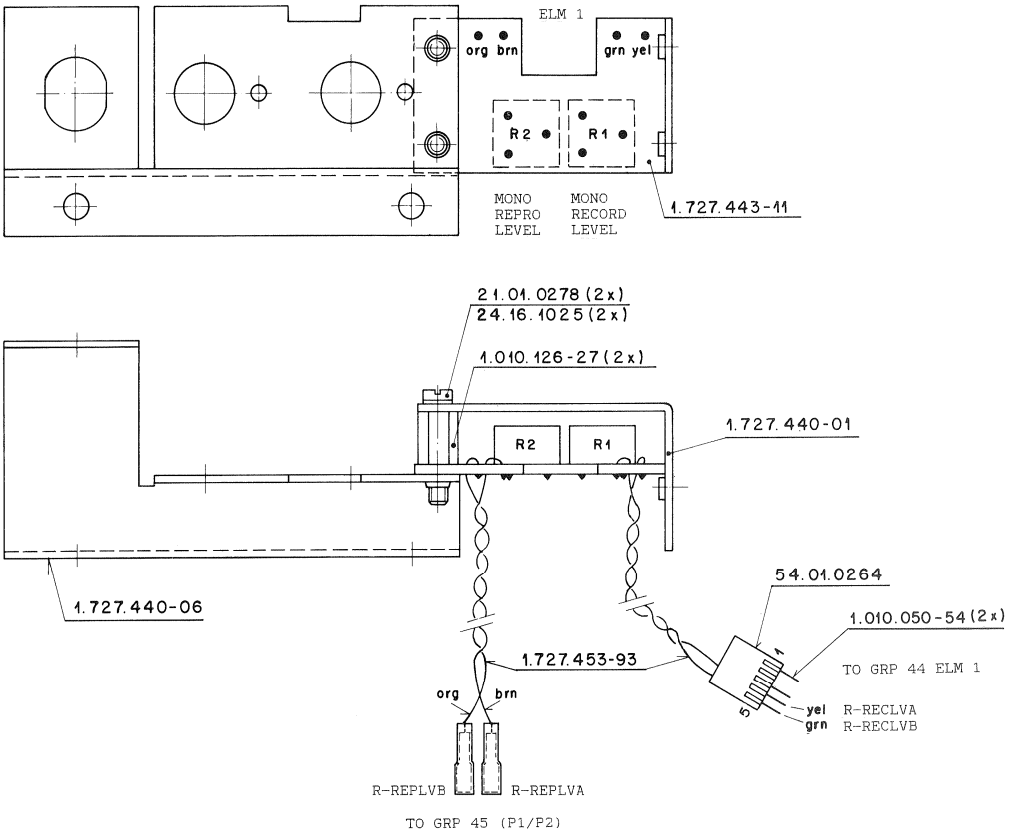

IND.	POS.NO.	PART NO.	VALUE	SPECIFICATIONS / EQUIVALENT	MANUF.
	MP....1	21.01.0278	2 pcs	Screw M2.5 * 5	
	MP....2	24.16.1025	2 pcs	Fin washer	
	MP....3	54.01.0264	1 pcs	5-pole Cis Pin Case	AMP
	MP....4	1.010.126.27	2 pcs	Screw bolt	St
	MP....5	1.727.440.01	1 pcs	Cover sheet	St
	MP....6	1.727.440.03	0 pcs	Text label, RECORD LVL	St
	MP....7	1.727.440.04	0 pcs	Text label, REPROD.LVL	St
	MP....8	1.727.440.06	1 pcs	Jack chassis	St
	MP....9	1.727.443.01	0 pcs	Text label	St
	MP...10	1.727.443.11	1 pcs	M/S Adjustment PCB	St
	MP...11	1.727.453.10	0 pcs	No. Label	St
	MP...12	1.727.453.93	1 pcs	Wiring list	St
	R.....1	58.01.8103	10 kOhm	10%, 0.5 W, PCerm	
	R.....2	58.01.8103	10 kOhm	10%, 0.5 W, PCerm	

MANUFACTURER:AMP,St=Studer

ORIG 87/03/02

S T U D E R (00) 87/03/02 GP M/S ADJUSTMENT UNIT PL 1.727.453.00 PAGE 1

MONO / STEREO ADJUSTMENT PBO UNIT (2CH) 1.727.454.00

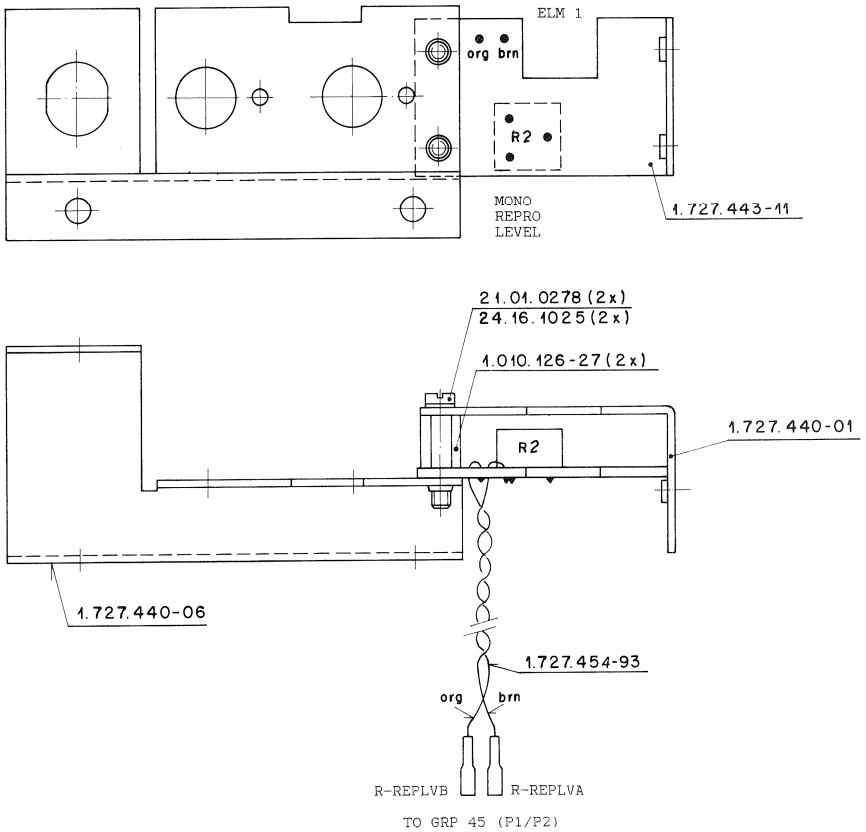

IND.	POS.NO.	PART NO.	VALUE	SPECIFICATIONS / EQUIVALENT	MANUF.
	MP....1	21.01.0278	2 pcs	Screw M2.5 * 5	
	MP....2	24.16.1025	2 pcs	Fin washer	
	MP....4	1.010.126.27	2 pcs	Screw bolt	St
	MP....5	1.727.440.01	1 pcs	Cover sheet	St
	MP....7	1.727.440.04	0 pcs	Text label, REPROD.LVL	St
	MP....8	1.727.440.06	1 pcs	Jack chassis	St
	MP...10	1.727.443.11	1 pcs	M/S Adjustment PCB	St
	MP...11	1.727.454.10	0 pcs	No. Label	St
	MP...12	1.727.454.93	1 pcs	Wiring list	St
	R.....2	58.01.8103	10 kOhm	10%, 0.5 W, PCerm	

MANUFACTURER:AMP,St=Studer

ORIG 87/11/12

S T U D E R (00) 87/11/12 Wth M/S ADJUSTMENT PBO UNIT PL 1.727.454.00 PAGE 1

PREAMPLIFIER BOARD (2CH) 1.727.430.00

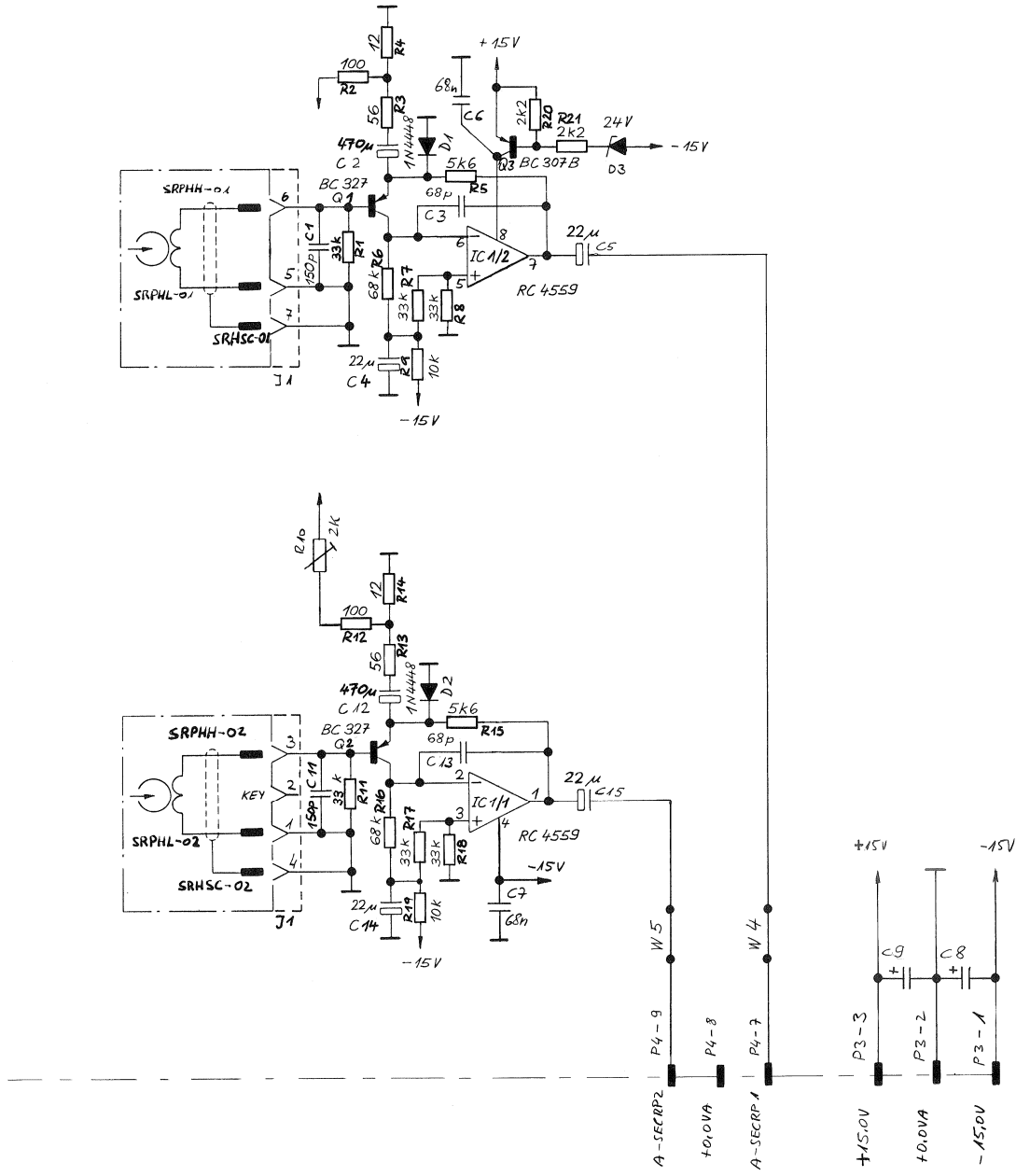

0 30.1.86 WH				
	A 807 GR43			PAGE 1 OF 1
STUDER	PREAMPLIFIER BOARD			1.727.430.00

PREAMPLIFIER BOARD (2CH) 1.727.430.00

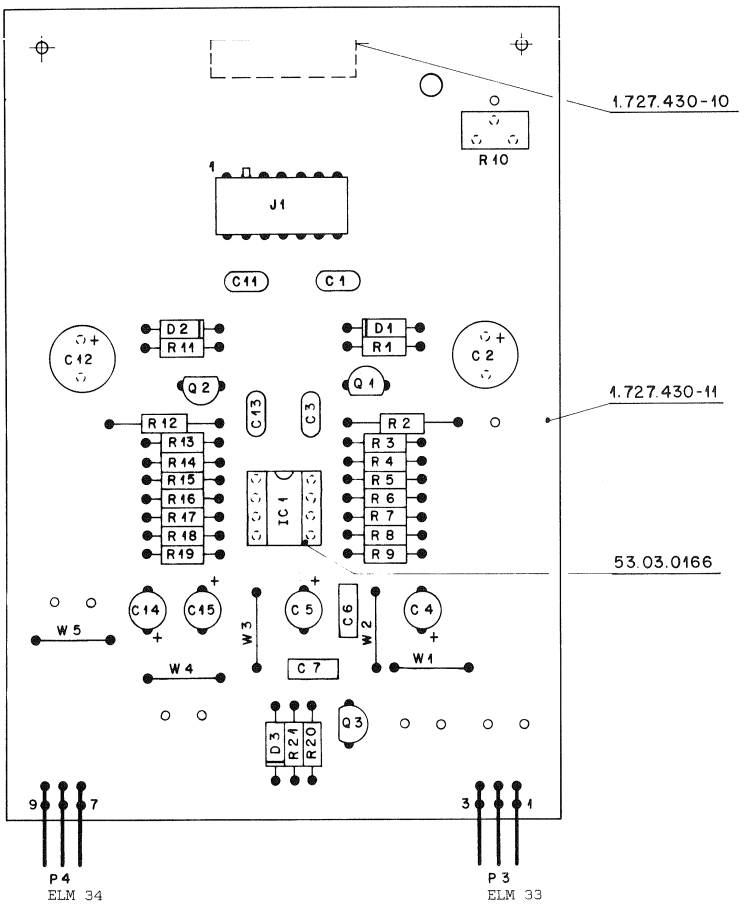

IND.	POS.NO.	PART NO.	VALUE	SPECIFICATIONS / EQUIVALENT	MANUF.
	C.....1	59.34.4151	150 pF	10% 50V Cer	
	C.....2	59.22.2471	470 uF	-20% 6.3V EL	
	C.....3	59.34.4680	68 pF	10% 50V Cer	
	C.....4	59.22.5220	22 uF	-20% 25V EL	
	C.....5	59.22.5220	22 uF	-20% 25V EL	
	C.....6	59.06.0683	68 nF	10% 63V PETP	
	C.....7	59.06.0683	68 nF	10% 63V PETP	
	C.....8			not used	
	C.....9			not used	
	C....11	59.34.4151	150 pF	10% 50V Cer	
	C....12	59.22.2471	470 uF	-20% 6.3V EL	
	C....13	59.34.4680	68 pF	10% 50V Cer	
	C....14	59.22.5220	22 uF	-20% 25V EL	
	C....15	59.22.5220	22 uF	-20% 25V EL	
	D.....1	50.04.0125	1N4448	50V SI	
	D.....2	50.04.0125	1N4448	50V SI	
	D.....3	50.04.1121	24 V	5% 0.4W Zener	
	IC....1	50.09.0107	RC 4559	Dual Op. Amp.	Ra
	J.....1	54.01.0244	7-Pole	CIS Socket Strip	AMP
	MP....1	1.727.430.10	1 pcs	No. Label	St
	MP....2	1.727.430.11	1 pcs	Preamlifier PCB	St
	Q.....1	50.03.0625	BC327	PNP	
	Q.....2	50.03.0625	BC327	PNP	
	Q.....3	50.03.0515	BC307B	BC557B, BC560B PNP	
	P.....3	54.01.0227	3-Pole	CIS Plug Strip	AMP
	P.....4	54.01.0227	3-Pole	CIS Plug Strip	AMP
	R.....1	57.11.4333	33 kOhm	2%, 0.25W, MF	
	R.....2	57.11.4101	100 Ohm	2%, 0.25W, MF	
	R.....3	57.11.4560	56 Ohm	2%, 0.25W, MF	
	R.....4	57.11.4120	12 Ohm	2%, 0.25W, MF	

IND.	POS.NO.	PART NO.	VALUE	SPECIFICATIONS / EQUIVALENT	MANUF.
	R.....5	57.11.4562	5.6 kOhm	2%, 0.25W, MF	
	R.....6	57.11.4683	68 kOhm	2%, 0.25W, MF	
	R.....7	57.11.4333	33 kOhm	2%, 0.25W, MF	
	R.....8	57.11.4333	33 kOhm	2%, 0.25W, MF	
	R.....9	57.11.4103	10 kOhm	2%, 0.25W, MF	
	R....10	58.01.9202	2 kOhm	10%, 0.5 W, PMG	
	R....11	57.11.4333	33 kOhm	2%, 0.25W, MF	
	R....12	57.11.4101	100 Ohm	2%, 0.25W, MF	
	R....13	57.11.4560	56 Ohm	2%, 0.25W, MF	
	R....14	57.11.4120	12 Ohm	2%, 0.25W, MF	
	R....15	57.11.4562	5.6 kOhm	2%, 0.25W, MF	
	R....16	57.11.4683	68 kOhm	2%, 0.25W, MF	
	R....17	57.11.4333	33 kOhm	2%, 0.25W, MF	
	R....18	57.11.4333	33 kOhm	2%, 0.25W, MF	
	R....19	57.11.4103	10 kOhm	2%, 0.25W, MF	
	R....20	57.11.4222	2.2 kOhm	2%, 0.25W, MF	
	R....21	57.11.4222	2.2 kOhm	2%, 0.25W, MF	
	W.....1	64.01.0106		wire bridge	
	W.....2	64.01.0106		wire bridge	
	W.....3	64.01.0106		wire bridge	
	W.....4	64.01.0106		wire bridge	
	W.....5	64.01.0106		wire bridge	
	XIC...1	53.03.0166	8 POLE	IC Socket	

Cer=Ceramic, EL=Electrolytic, PETP=Polyester, SI=Silicon,
MF=Metal Film, PMG=Cermet
MANUFACTURER: AMP=AMP, Ra=Raytheon, St=Studer

ORIG 86/10/17

AUDIO INSERT INTERFACE SET 1.727.431.00

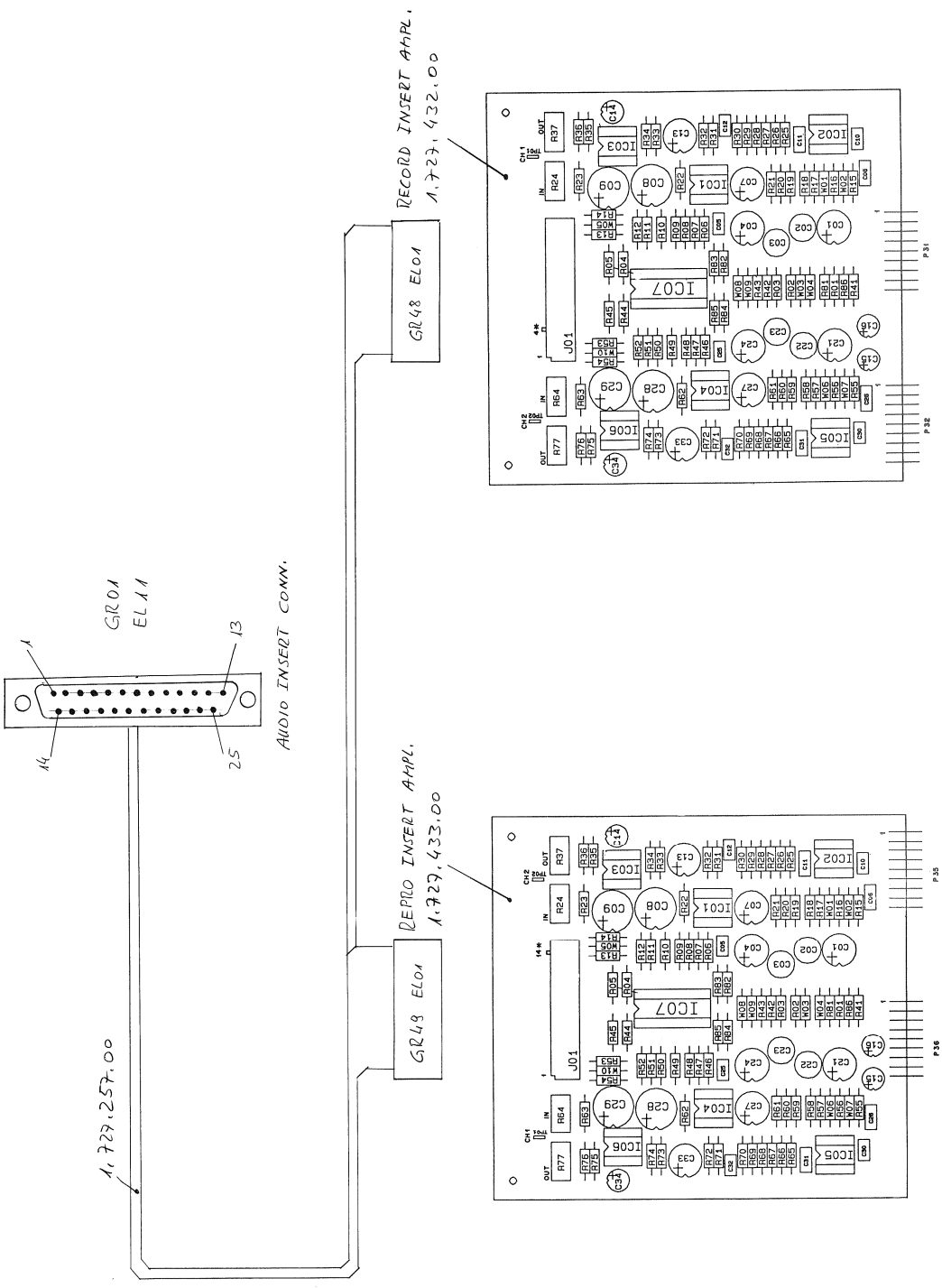

0 24.4.90 WH.				
	A 807			PAGE 1 OF 1
STUDER	AUDIO INSERT IF. SET			1.727.431.00

RECORD INSERT AMPLIFIER (2CH) 1.727.432.00

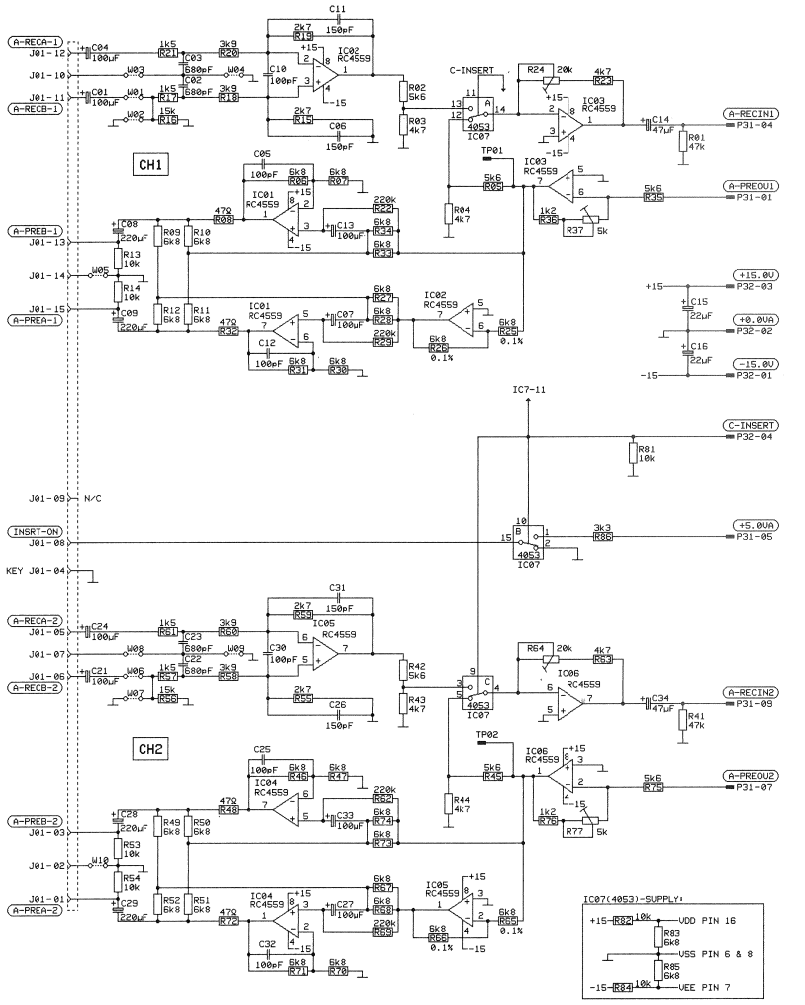

OCT 30, 1990 DS				
	A 807 GRP 48			PAGE 1 OF 1
STUDER	RECORD INSERT AMPLIFIER		SCH	1.727.432-00

RECORD INSERT AMPLIFIER (2CH) 1.727.432.00

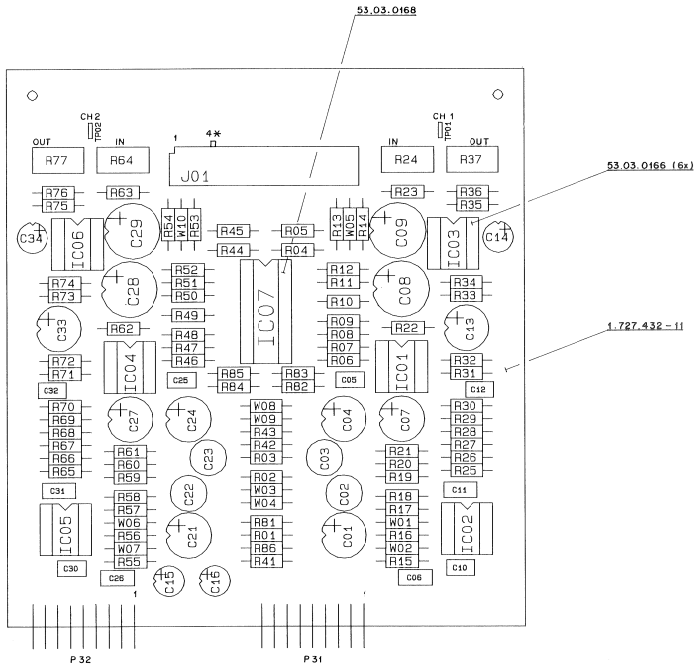

IND.	POS.NO.	PART NO.	VALUE	SPECIFICATIONS / EQUIVALENT	MANUF.
	C.....1	59.22.5101	100 uF	-20% 25V EL	
	C.....2	59.05.1681	680 pF	1% 630V PP	
	C.....3	59.05.1681	680 pF	1% 630V PP	
	C.....4	59.22.5101	100 uF	-20% 25V EL	
	C.....5	59.34.4101	100 pF	5% 63V Cer	
	C.....6	59.34.7151	150 pF	2% 63V Cer	
	C.....7	59.22.5101	100 uF	-20% 25V EL	
	C.....8	59.22.5221	220 uF	-20% 25V EL	
	C.....9	59.22.5221	220 uF	-20% 25V EL	
	C....10	59.34.4101	100 pF	5% 63V Cer	
	C....11	59.34.7151	150 pF	2% 63V Cer	
	C....12	59.34.4101	100 pF	5% 63V Cer	
	C....13	59.22.5101	100 uF	-20% 25V EL	
	C....14	59.22.3470	47 uF	-20% 10V EL	
	C....15	59.22.5220	22 uF	-20% 25V EL	
	C....16	59.22.5220	22 uF	-20% 25V EL	
	C....21	59.22.5101	100 uF	-20% 25V EL	
	C....22	59.05.1681	680 pF	1% 630V PP	
	C....23	59.05.1681	680 pF	1% 630V PP	
	C....24	59.22.5101	100 uF	-20% 25V EL	
	C....25	59.34.4101	100 pF	5% 63V Cer	
	C....26	59.34.7151	150 pF	2% 63V Cer	
	C....27	59.22.5101	100 uF	-20% 25V EL	
	C....28	59.22.5221	220 uF	-20% 25V EL	
	C....29	59.22.5221	220 uF	-20% 25V EL	
	C....30	59.34.4101	100 pF	5% 63V Cer	
	C....31	59.34.7151	150 pF	2% 63V Cer	
	C....32	59.34.4101	100 pF	5% 63V Cer	
	C....33	59.22.5101	100 uF	-20% 25V EL	
	C....34	59.22.3470	47 uF	-20% 10V EL	
	IC....1	50.09.0107	RC 4559	Dual OpAmp	
	IC....2	50.09.0107	RC 4559	Dual OpAmp	
	IC....3	50.09.0107	RC 4559	Dual OpAmp	
	IC....4	50.09.0107	RC 4559	Dual OpAmp	
	IC....5	50.09.0107	RC 4559	Dual OpAmp	
	IC....6	50.09.0107	RC 4559	Dual OpAmp	

IND.	POS.NO.	PART NO.	VALUE	SPECIFICATIONS / EQUIVALENT	MANUF.
	IC....7	50.07.6015	MC 14053	CMOS AMUX	Mot
	J.....1	54.01.0243	15-pin	CIS-Connector	AMP
	MP....1	43.01.0108	1 pce	ESE Warning Label	
	MP....2	1.727.432.10	1 pce	Nr. Label	ST
	MP....3	1.727.432.11	1 pce	RECORD INSERT AMPLIFIER PCB	ST
	P....31	54.01.0220	9-pin	CIS Pin Strip	AMP
	P....32	54.01.0220	9-pin	CIS Pin Strip	AMP
	R.....1	57.11.3473	47 kOhm	1% 0.25W MF	
	R.....2	57.11.3562	5.6 kOhm	1% 0.25W MF	
	R.....3	57.11.3472	4.7 kOhm	1% 0.25W MF	
	R.....4	57.11.3472	4.7 kOhm	1% 0.25W MF	
	R.....5	57.11.3562	5.6 kOhm	1% 0.25W MF	
	R.....6	57.11.3682	6.8 kOhm	1% 0.25W MF	
	R.....7	57.11.3682	6.8 kOhm	1% 0.25W MF	
	R.....8	57.11.3470	47 Ohm	1% 0.25W MF	
	R.....9	57.11.3682	6.8 kOhm	1% 0.25W MF	
	R....10	57.11.3682	6.8 kOhm	1% 0.25W MF	
	R....11	57.11.3682	6.8 kOhm	1% 0.25W MF	
	R....12	57.11.3682	6.8 kOhm	1% 0.25W MF	
	R....13	57.11.3103	10 kOhm	1% 0.25W MF	
	R....14	57.11.3103	10 kOhm	1% 0.25W MF	
	R....15	57.11.3272	2.7 kOhm	1% 0.25W MF	
	R....16	57.11.3153	15 kOhm	1% 0.25W MF	
	R....17	57.11.3152	1.5 kOhm	1% 0.25W MF	
	R....18	57.11.3392	3.9 kOhm	1% 0.25W MF	
	R....19	57.11.3272	2.7 kOhm	1% 0.25W MF	
	R....20	57.11.3392	3.9 kOhm	1% 0.25W MF	
	R....21	57.11.3152	1.5 kOhm	1% 0.25W MF	
	R....22	57.11.3224	220 kOhm	1% 0.25W MF	
	R....23	57.11.3472	4.7 kOhm	1% 0.25W MF	
	R....24	58.01.9203	20 kOhm	10% 0.5 W linear	
	R....25	57.99.0250	6.8 kOhm	0.1% 0.25W MF	
	R....26	57.99.0250	6.8 kOhm	0.1% 0.25W MF	

IND.	POS.NO.	PART NO.	VALUE	SPECIFICATIONS / EQUIVALENT	MANUF.
	R....27	57.11.3682	6.8 kOhm	1% 0.25W MF	
	R....28	57.11.3682	6.8 kOhm	1% 0.25W MF	
	R....29	57.11.3224	220 kOhm	1% 0.25W MF	
	R....30	57.11.3682	6.8 kOhm	1% 0.25W MF	
	R....31	57.11.3682	6.8 kOhm	1% 0.25W MF	
	R....32	57.11.3470	47 Ohm	1% 0.25W MF	
	R....33	57.11.3682	6.8 kOhm	1% 0.25W MF	
	R....34	57.11.3682	6.8 kOhm	1% 0.25W MF	
	R....35	57.11.3562	5.6 kOhm	1% 0.25W MF	
	R....36	57.11.3122	1.2 kOhm	1% 0.25W MF	
	R....37	58.01.9502	5 kOhm	10% 0.5 W linear	
	R....41	57.11.3473	47 kOhm	1% 0.25W MF	
	R....42	57.11.3562	5.6 kOhm	1% 0.25W MF	
	R....43	57.11.3472	4.7 kOhm	1% 0.25W MF	
	R....44	57.11.3472	4.7 kOhm	1% 0.25W MF	
	R....45	57.11.3562	5.6 kOhm	1% 0.25W MF	
	R....46	57.11.3682	6.8 kOhm	1% 0.25W MF	
	R....47	57.11.3682	6.8 kOhm	1% 0.25W MF	
	R....48	57.11.3470	47 Ohm	1% 0.25W MF	
	R....49	57.11.3682	6.8 kOhm	1% 0.25W MF	
	R....50	57.11.3682	6.8 kOhm	1% 0.25W MF	
	R....51	57.11.3682	6.8 kOhm	1% 0.25W MF	
	R....52	57.11.3682	6.8 kOhm	1% 0.25W MF	
	R....53	57.11.3103	10 kOhm	1% 0.25W MF	
	R....54	57.11.3103	10 kOhm	1% 0.25W MF	
	R....55	57.11.3272	2.7 kOhm	1% 0.25W MF	
	R....56	57.11.3153	15 kOhm	1% 0.25W MF	
	R....57	57.11.3152	1.5 kOhm	1% 0.25W MF	
	R....58	57.11.3392	3.9 kOhm	1% 0.25W MF	
	R....59	57.11.3272	2.7 kOhm	1% 0.25W MF	
	R....60	57.11.3392	3.9 kOhm	1% 0.25W MF	
	R....61	57.11.3152	1.5 kOhm	1% 0.25W MF	
	R....62	57.11.3224	220 kOhm	1% 0.25W MF	
	R....63	57.11.3472	4.7 kOhm	1% 0.25W MF	
	R....64	58.01.9203	20 kOhm	10% 0.5 W linear	
	R....65	57.99.0250	6.8 kOhm	0.1% 0.25W MF	
	R....66	57.99.0250	6.8 kOhm	0.1% 0.25W MF	

IND.	POS.NO.	PART NO.	VALUE	SPECIFICATIONS / EQUIVALENT	MANUF.
	R....67	57.11.3682	6.8 kOhm	1% 0.25W MF	
	R....68	57.11.3682	6.8 kOhm	1% 0.25W MF	
	R....69	57.11.3224	220 kOhm	1% 0.25W MF	
	R....70	57.11.3682	6.8 kOhm	1% 0.25W MF	
	R....71	57.11.3682	6.8 kOhm	1% 0.25W MF	
	R....72	57.11.3470	47 Ohm	1% 0.25W MF	
	R....73	57.11.3682	6.8 kOhm	1% 0.25W MF	
	R....74	57.11.3682	6.8 kOhm	1% 0.25W MF	
	R....75	57.11.3562	5.6 kOhm	1% 0.25W MF	
	R....76	57.11.3122	1.2 kOhm	1% 0.25W MF	
	R....77	58.01.9502	5 kOhm	10% 0.5 W linear	
	R....81	57.11.3103	10 kOhm	1% 0.25W MF	
	R....82	57.11.3103	10 kOhm	1% 0.25W MF	
	R....83	57.11.3682	6.8 kOhm	1% 0.25W MF	
	R....84	57.11.3103	10 kOhm	1% 0.25W MF	
	R....85	57.11.3682	6.8 kOhm	1% 0.25W MF	
	R....86	57.11.3332	3.3 kOhm	1% 0.25W MF	
	TP....1	54.02.0320		Plug 2.840.8 mm	AMP
	TP....2	54.02.0320		Plug 2.840.8 mm	AMP
	W.....1	57.11.3000		Insulated Wire Bridge	
	W.....2			not used	
	W.....3	57.11.3000		Insulated Wire Bridge	
	W.....4	57.11.3000		Insulated Wire Bridge	
	W.....5	57.11.3000		Insulated Wire Bridge	
	W.....6	57.11.3000		Insulated Wire Bridge	
	W.....7			not used	
	W.....8	57.11.3000		Insulated Wire Bridge	
	W.....9	57.11.3000		Insulated Wire Bridge	
	W....10	57.11.3000		Insulated Wire Bridge	
	XIC...1	53.03.0166	8-pin	IC Socket	
	XIC...2	53.03.0166	8-pin	IC Socket	
	XIC...3	53.03.0166	8-pin	IC Socket	
	XIC...4	53.03.0166	8-pin	IC Socket	
	XIC...5	53.03.0166	8-pin	IC Socket	

IND.	POS.NO.	PART NO.	VALUE	SPECIFICATIONS / EQUIVALENT	MANUF.
	XIC...6	53.03.0166	8-pin	IC Socket	
	XIC...7	53.03.0168	16-pin	IC Socket	

MF= Metal Film EL= Electrolytic
CE= Ceramic PP= Polypropylen

MANUFACTURER: Mot= Motorola ST= STUDER

ORIG 90/03/01

REPRODUCE INSERT AMPLIFIER (2CH) 1.727.433.00

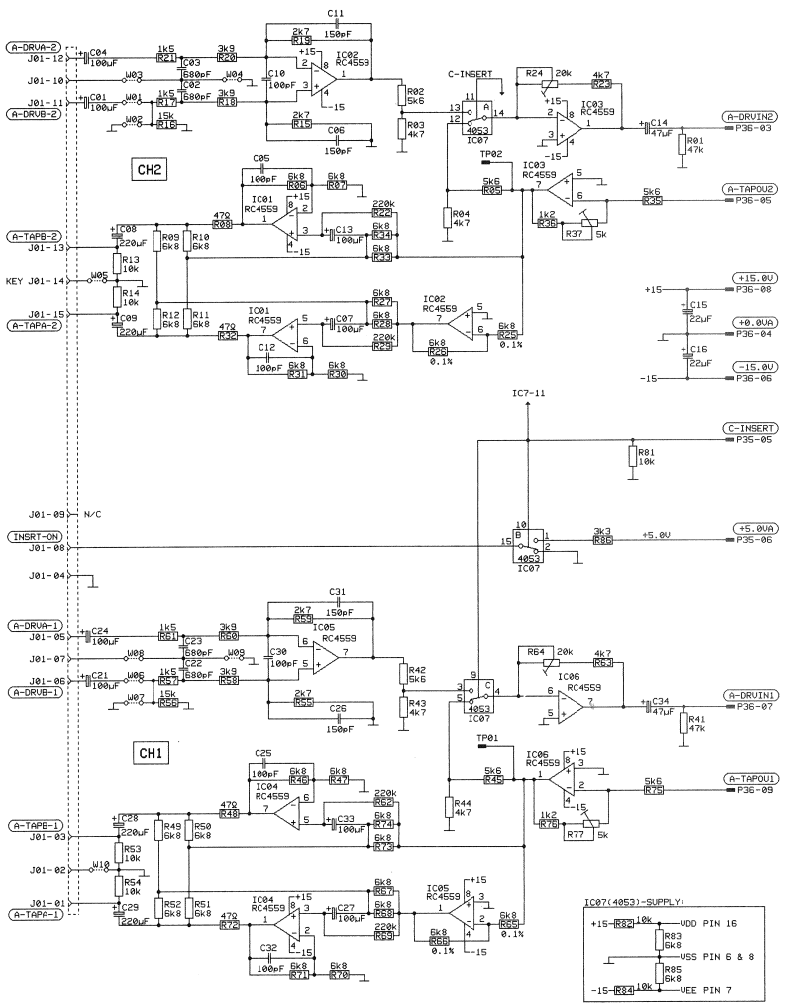

© OCT 30, 1990 DS				
	A 807 GRP 49			PAGE 1 OF 1
STUDER	REPRODUCE INSERT AMPLIFIER		SCH	1.727.433-00

REPRODUCE INSERT AMPLIFIER (2CH) 1.727.433.00

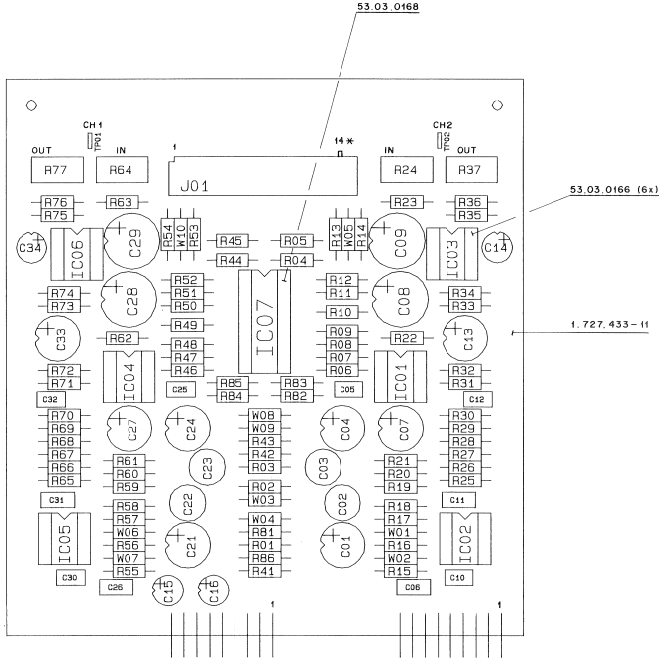

IND.	POS.NO.	PART NO.	VALUE	SPECIFICATIONS / EQUIVALENT	MANUF.
	C....1	59.22.5101	100 uF	-20% 25V EL	
	C....2	59.05.1681	680 pF	1% 630V PP	
	C....3	59.05.1681	680 pF	1% 630V PP	
	C....4	59.22.5101	100 uF	-20% 25V EL	
	C....5	59.34.4101	100 pF	5% 63V Cer	
	C....6	59.34.7151	150 pF	2% 63V Cer	
	C....7	59.22.5101	100 uF	-20% 25V EL	
	C....8	59.22.5221	220 uF	-20% 25V EL	
	C....9	59.22.5221	220 uF	-20% 25V EL	
	C....10	59.34.4101	100 pF	5% 63V Cer	
	C....11	59.34.7151	150 pF	2% 63V Cer	
	C....12	59.34.4101	100 pF	5% 63V Cer	
	C....13	59.22.5101	100 uF	-20% 25V EL	
	C....14	59.22.3470	47 uF	-20% 10V EL	
	C....15	59.22.5220	22 uF	-20% 25V EL	
	C....16	59.22.5220	22 uF	-20% 25V EL	
	C....21	59.22.5101	100 uF	-20% 25V EL	
	C....22	59.05.1681	680 pF	1% 630V PP	
	C....23	59.05.1681	680 pF	1% 630V PP	
	C....24	59.22.5101	100 uF	-20% 25V EL	
	C....25	59.34.4101	100 pF	5% 63V Cer	
	C....26	59.34.7151	150 pF	2% 63V Cer	
	C....27	59.22.5101	100 uF	-20% 25V EL	
	C....28	59.22.5221	220 uF	-20% 25V EL	
	C....29	59.22.5221	220 uF	-20% 25V EL	
	C....30	59.34.4101	100 pF	5% 63V Cer	
	C....31	59.34.7151	150 pF	2% 63V Cer	
	C....32	59.34.4101	100 pF	5% 63V Cer	
	C....33	59.22.5101	100 uF	-20% 25V EL	
	C....34	59.22.3470	47 uF	-20% 10V EL	
	IC....1	50.09.0107	RC 4559	Dual OpAmp	
	IC....2	50.09.0107	RC 4559	Dual OpAmp	
	IC....3	50.09.0107	RC 4559	Dual OpAmp	
	IC....4	50.09.0107	RC 4559	Dual OpAmp	
	IC....5	50.09.0107	RC 4559	Dual OpAmp	
	IC....6	50.09.0107	RC 4559	Dual OpAmp	

IND.	POS.NO.	PART NO.	VALUE	SPECIFICATIONS / EQUIVALENT	MANUF.
	IC....7	50.07.0015	MC 14053	CMOS AMUX	Mot
	J....1	54.01.0243	15-pin	CIS-Connector	AMP
	MP....1	43.01.0108	1 pce	ESI Warning Label	
	MP....2	1.727.433.10	1 pce	No. Label	ST
	MP....3	1.727.433.11	1 pce	REPRODUCE INSERT AMPLIFIER PCB	ST
	P....35	54.01.0220	9-pin	CIS Pin Strip	AMP
	P....36	54.01.0220	9-pin	CIS Pin Strip	AMP
	R....1	57.11.3473	47 kOhm	1% 0.25W MF	
	R....2	57.11.3562	5.6 kOhm	1% 0.25W MF	
	R....3	57.11.3472	4.7 kOhm	1% 0.25W MF	
	R....4	57.11.3472	4.7 kOhm	1% 0.25W MF	
	R....5	57.11.3562	5.6 kOhm	1% 0.25W MF	
	R....6	57.11.3682	6.8 kOhm	1% 0.25W MF	
	R....7	57.11.3682	6.8 kOhm	1% 0.25W MF	
	R....8	57.11.3470	47 Ohm	1% 0.25W MF	
	R....9	57.11.3682	6.8 kOhm	1% 0.25W MF	
	R....10	57.11.3682	6.8 kOhm	1% 0.25W MF	
	R....11	57.11.3682	6.8 kOhm	1% 0.25W MF	
	R....12	57.11.3682	6.8 kOhm	1% 0.25W MF	
	R....13	57.11.3103	10 kOhm	1% 0.25W MF	
	R....14	57.11.3103	10 kOhm	1% 0.25W MF	
	R....15	57.11.3272	2.7 kOhm	1% 0.25W MF	
	R....16	57.11.3153	15 kOhm	1% 0.25W MF	
	R....17	57.11.3152	1.5 kOhm	1% 0.25W MF	
	R....18	57.11.3392	3.9 kOhm	1% 0.25W MF	
	R....19	57.11.3272	2.7 kOhm	1% 0.25W MF	
	R....20	57.11.3392	3.9 kOhm	1% 0.25W MF	
	R....21	57.11.3152	1.5 kOhm	1% 0.25W MF	
	R....22	57.11.3224	220 kOhm	1% 0.25W MF	
	R....23	57.11.3472	4.7 kOhm	1% 0.25W MF	
	R....24	58.01.9203	20 kOhm	10% 0.5 W linear	
	R....25	57.99.0250	6.8 kOhm	0.1% 0.25W MF	
	R....26	57.99.0250	6.8 kOhm	0.1% 0.25W MF	

IND.	POS.NO.	PART NO.	VALUE	SPECIFICATIONS / EQUIVALENT	MANUF.
	R....27	57.11.3682	6.8 kOhm	1% 0.25W MF	
	R....28	57.11.3682	6.8 kOhm	1% 0.25W MF	
	R....29	57.11.3224	220 kOhm	1% 0.25W MF	
	R....30	57.11.3682	6.8 kOhm	1% 0.25W MF	
	R....31	57.11.3682	6.8 kOhm	1% 0.25W MF	
	R....32	57.11.3470	47 Ohm	1% 0.25W MF	
	R....33	57.11.3682	6.8 kOhm	1% 0.25W MF	
	R....34	57.11.3682	6.8 kOhm	1% 0.25W MF	
	R....35	57.11.3562	5.6 kOhm	1% 0.25W MF	
	R....36	57.11.3122	1.2 kOhm	1% 0.25W MF	
	R....37	58.01.9502	5 kOhm	10% 0.5 W linear	
	R....41	57.11.3473	47 kOhm	1% 0.25W MF	
	R....42	57.11.3562	5.6 kOhm	1% 0.25W MF	
	R....43	57.11.3472	4.7 kOhm	1% 0.25W MF	
	R....44	57.11.3472	4.7 kOhm	1% 0.25W MF	
	R....45	57.11.3562	5.6 kOhm	1% 0.25W MF	
	R....46	57.11.3682	6.8 kOhm	1% 0.25W MF	
	R....47	57.11.3682	6.8 kOhm	1% 0.25W MF	
	R....48	57.11.3470	47 Ohm	1% 0.25W MF	
	R....49	57.11.3682	6.8 kOhm	1% 0.25W MF	
	R....50	57.11.3682	6.8 kOhm	1% 0.25W MF	
	R....51	57.11.3682	6.8 kOhm	1% 0.25W MF	
	R....52	57.11.3682	6.8 kOhm	1% 0.25W MF	
	R....53	57.11.3103	10 kOhm	1% 0.25W MF	
	R....54	57.11.3103	10 kOhm	1% 0.25W MF	
	R....55	57.11.3272	2.7 kOhm	1% 0.25W MF	
	R....56	57.11.3153	15 kOhm	1% 0.25W MF	
	R....57	57.11.3152	1.5 kOhm	1% 0.25W MF	
	R....58	57.11.3392	3.9 kOhm	1% 0.25W MF	
	R....59	57.11.3272	2.7 kOhm	1% 0.25W MF	
	R....60	57.11.3392	3.9 kOhm	1% 0.25W MF	
	R....61	57.11.3152	1.5 kOhm	1% 0.25W MF	
	R....62	57.11.3224	220 kOhm	1% 0.25W MF	
	R....63	57.11.3472	4.7 kOhm	1% 0.25W MF	
	R....64	58.01.9203	20 kOhm	10% 0.5 W linear	
	R....65	57.99.0250	6.8 kOhm	0.1% 0.25W MF	
	R....66	57.99.0250	6.8 kOhm	0.1% 0.25W MF	

IND.	POS.NO.	PART NO.	VALUE	SPECIFICATIONS / EQUIVALENT	MANUF.
	R....67	57.11.3682	6.8 kOhm	1% 0.25W MF	
	R....68	57.11.3682	6.8 kOhm	1% 0.25W MF	
	R....69	57.11.3224	220 kOhm	1% 0.25W MF	
	R....70	57.11.3682	6.8 kOhm	1% 0.25W MF	
	R....71	57.11.3682	6.8 kOhm	1% 0.25W MF	
	R....72	57.11.3470	47 Ohm	1% 0.25W MF	
	R....73	57.11.3682	6.8 kOhm	1% 0.25W MF	
	R....74	57.11.3682	6.8 kOhm	1% 0.25W MF	
	R....75	57.11.3562	5.6 kOhm	1% 0.25W MF	
	R....76	57.11.3122	1.2 kOhm	1% 0.25W MF	
	R....77	58.01.9502	5 kOhm	10% 0.5 W linear	
	R....81	57.11.3103	10 kOhm	1% 0.25W MF	
	R....82	57.11.3103	10 kOhm	1% 0.25W MF	
	R....83	57.11.3682	6.8 kOhm	1% 0.25W MF	
	R....84	57.11.3103	10 kOhm	1% 0.25W MF	
	R....85	57.11.3682	6.8 kOhm	1% 0.25W MF	
	R....86	57.11.3332	3.3 kOhm	1% 0.25W MF	
	TP....1	54.02.0320		Plug 2.840.8 nm	AMP
	TP....2	54.02.0320		Plug 2.840.8 nm	AMP
	W....1	57.11.3000		Insulated Wire Bridge	
	W....2			not used	
	W....3	57.11.3000		Insulated Wire Bridge	
	W....4	57.11.3000		Insulated Wire Bridge	
	W....5	57.11.3000		Insulated Wire Bridge	
	W....6	57.11.3000		Insulated Wire Bridge	
	W....7			not used	
	W....8	57.11.3000		Insulated Wire Bridge	
	W....9	57.11.3000		Insulated Wire Bridge	
	W....10	57.11.3000		Insulated Wire Bridge	
	XIC...1	53.03.0166	8-pin	IC Socket	
	XIC...2	53.03.0166	8-pin	IC Socket	
	XIC...3	53.03.0166	8-pin	IC Socket	
	XIC...4	53.03.0166	8-pin	IC Socket	
	XIC...5	53.03.0166	8-pin	IC Socket	

IND.	POS.NO.	PART NO.	VALUE	SPECIFICATIONS / EQUIVALENT	MANUF.
	XIC...6	53.03.0166	8-pin	IC Socket	
	XIC...7	53.03.0168	16-pin	IC Socket	

MF= Metal Film EL= Electrolytic
CER= Ceramic PP= Polypropylen

MANUFACTURER: Mot= Motorola ST= STUDER

ORIG 90/03/06

NRS CONTROL BOARD 1.727.686.00

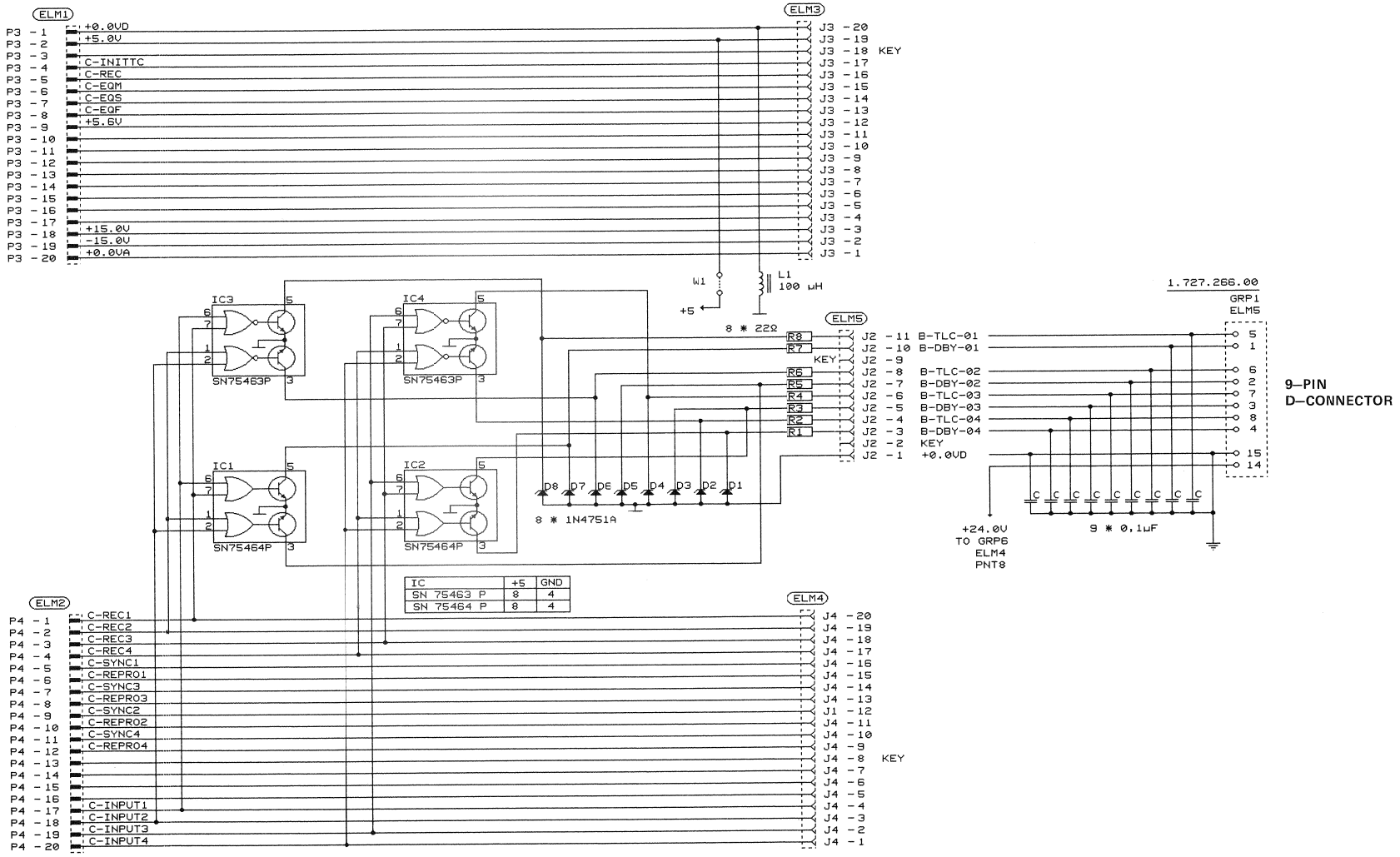

NRS CONTROL BOARD 1.727.686.00

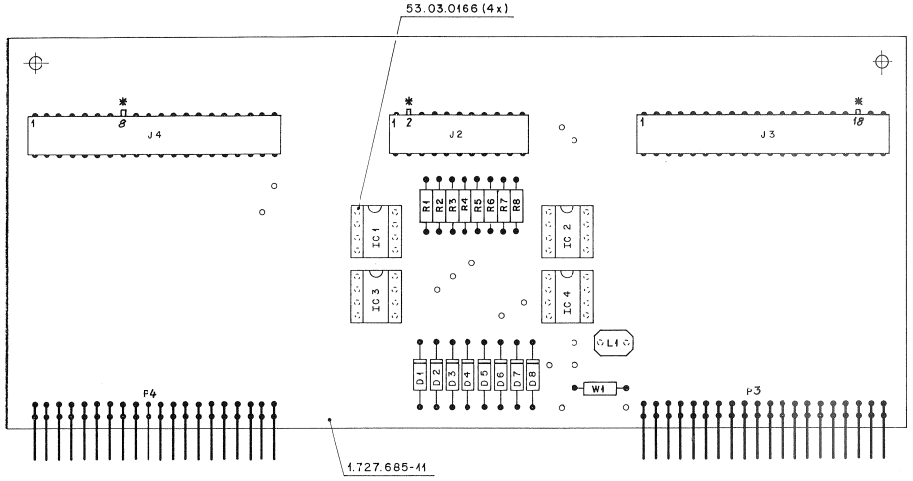

*Codierung: Schaltdraht 64.01.0108 ⌀ 0,8 x 8mm
(muss 1mm vorstehen)

IND.	POS.NO.	PART NO.	VALUE	SPECIFICATIONS / EQUIVALENT	MANUF.
	C.....1			not used	
	D.....1	50.04.1506	30 V Z	BZX61C30, BZV85C30, ZY30, 1N4751A	ITT,Mot,Ph
	D.....2	50.04.1506	30 V Z	BZX61C30, BZV85C30, ZY30, 1N4751A	ITT,Mot,Ph
	D.....3	50.04.1506	30 V Z	BZX61C30, BZV85C30, ZY30, 1N4751A	ITT,Mot,Ph
	D.....4	50.04.1506	30 V Z	BZX61C30, BZV85C30, ZY30, 1N4751A	ITT,Mot,Ph
	D.....5	50.04.1506	30 V Z	BZX61C30, BZV85C30, ZY30, 1N4751A	ITT,Mot,Ph
	D.....6	50.04.1506	30 V Z	BZX61C30, BZV85C30, ZY30, 1N4751A	ITT,Mot,Ph
	D.....7	50.04.1506	30 V Z	BZX61C30, BZV85C30, ZY30, 1N4751A	ITT,Mot,Ph
	D.....8	50.04.1506	30 V Z	BZX61C30, BZV85C30, ZY30, 1N4751A	ITT,Mot,Ph
	IC....1	50.05.0204	SN75464P	Dual NOR-Driver o.c.	NSC,TI
	IC....2	50.05.0204	SN75464P	Dual NOR-Driver o.c.	NSC,TI
	IC....3	50.05.0203	SN75463P	Dual OR-Driver o.c.	NSC,TI
	IC....4	50.05.0203	SN75463P	Dual OR-Driver o.c.	NSC,TI
	J.....2	54.01.0308	11-Pole	CIS Socket Strip	AMP
	J.....3	54.01.0248	20-Pole	CIS Socket Strip	AMP
	J.....4	54.01.0248	20-Pole	CIS Socket Strip	AMP
	L.....1	62.02.3101	22 uH	10%	
	MP....1	1.727.686.10	1 pce	No. Label	
	MP....2	1.727.686.11	1 pce	NRS Control PCB	
	P.....3	54.01.0261	20-Pole	CIS Pin Strip	AMP
	P.....4	54.01.0261	20-Pole	CIS Pin Strip	AMP
	R.....1	57.11.3220	22 Ohm	1%, 0.25W, MF	
	R.....2	57.11.3220	22 Ohm	1%, 0.25W, MF	
	R.....3	57.11.3220	22 Ohm	1%, 0.25W, MF	
	R.....4	57.11.3220	22 Ohm	1%, 0.25W, MF	
	R.....5	57.11.3220	22 Ohm	1%, 0.25W, MF	
	R.....6	57.11.3220	22 Ohm	1%, 0.25W, MF	
	R.....7	57.11.3220	22 Ohm	1%, 0.25W, MF	
	R.....8	57.11.3220	22 Ohm	1%, 0.25W, MF	

IND.	POS.NO.	PART NO.	VALUE	SPECIFICATIONS / EQUIVALENT	MANUF.
	W.....1	57.11.3000		Wire Bridge	
	XIC...1	53.03.0166	8-Pole	IC-Socket	
	XIC...2	53.03.0166	8-Pole	IC-Socket	
	XIC...3	53.03.0166	8-Pole	IC-Socket	
	XIC...4	53.03.0166	8-Pole	IC-Socket	

MANUFACTURER: ITT=Intermetall, Mot=Motorola, TI=Texas Instruments
NSC=National Semiconductor Corp., Ph=Philips,

ORIG 91/10/28

WIRING DIAGRAM EXTERNAL VU-PANEL (2CH) 1.727.926.00

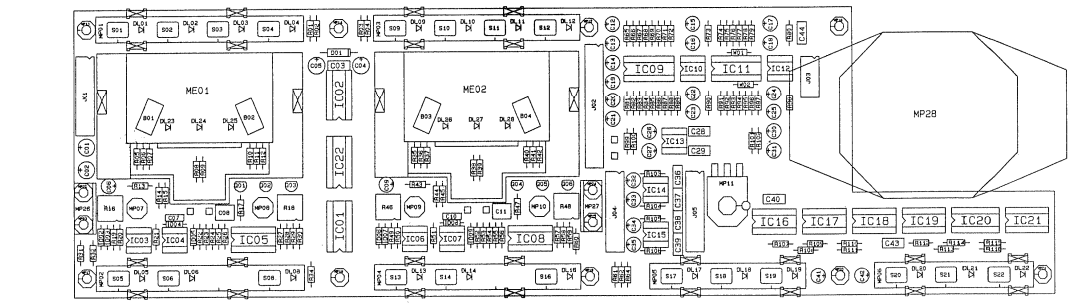

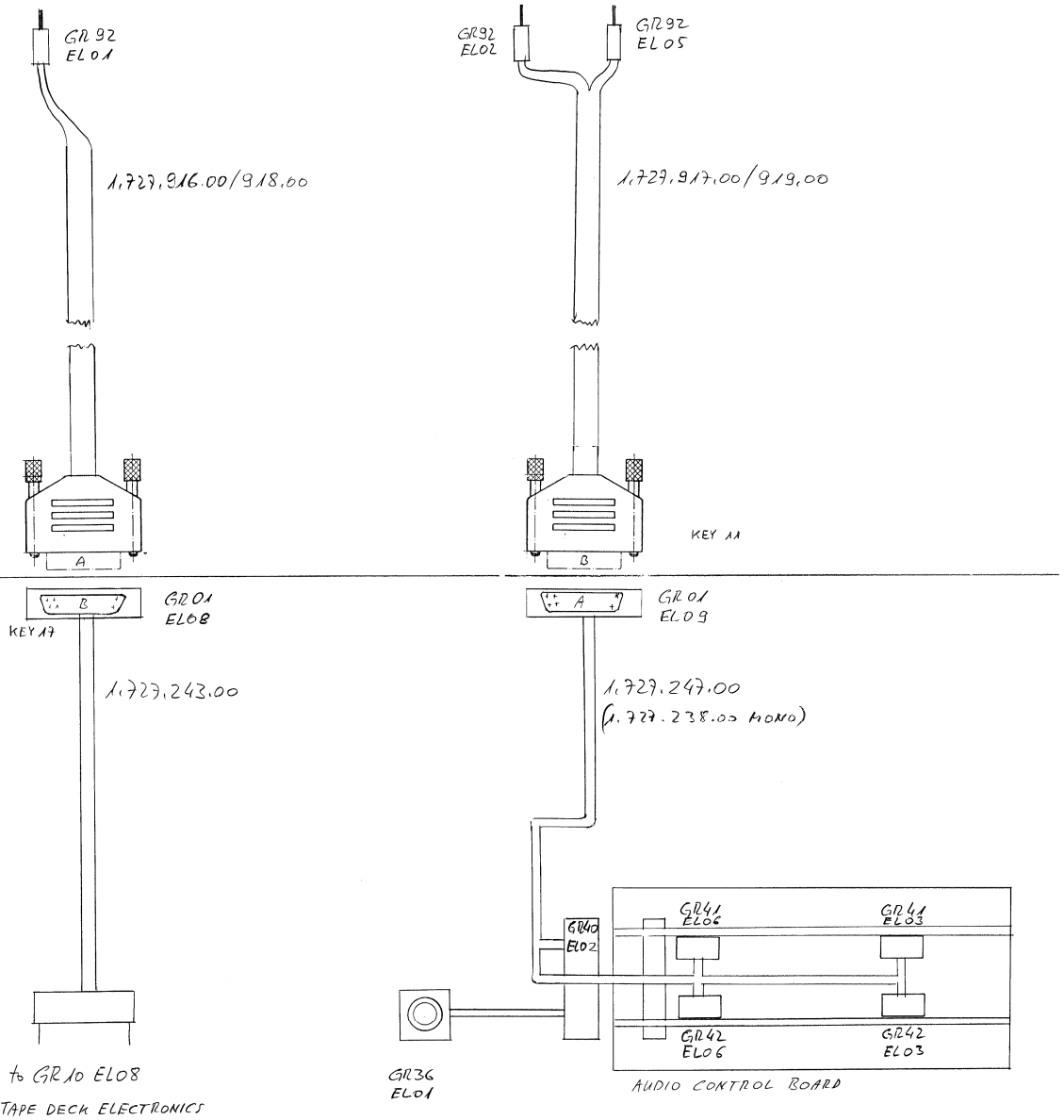

0 30.10.91 WH.				
	A 807. VERSION VUK			PAGE 1 OF 1
STUDER	VERDRAHTUNG, EXT. VU-PANEL			1.727.926.00

VU PANEL BOARD 2CH 1.727.928.83

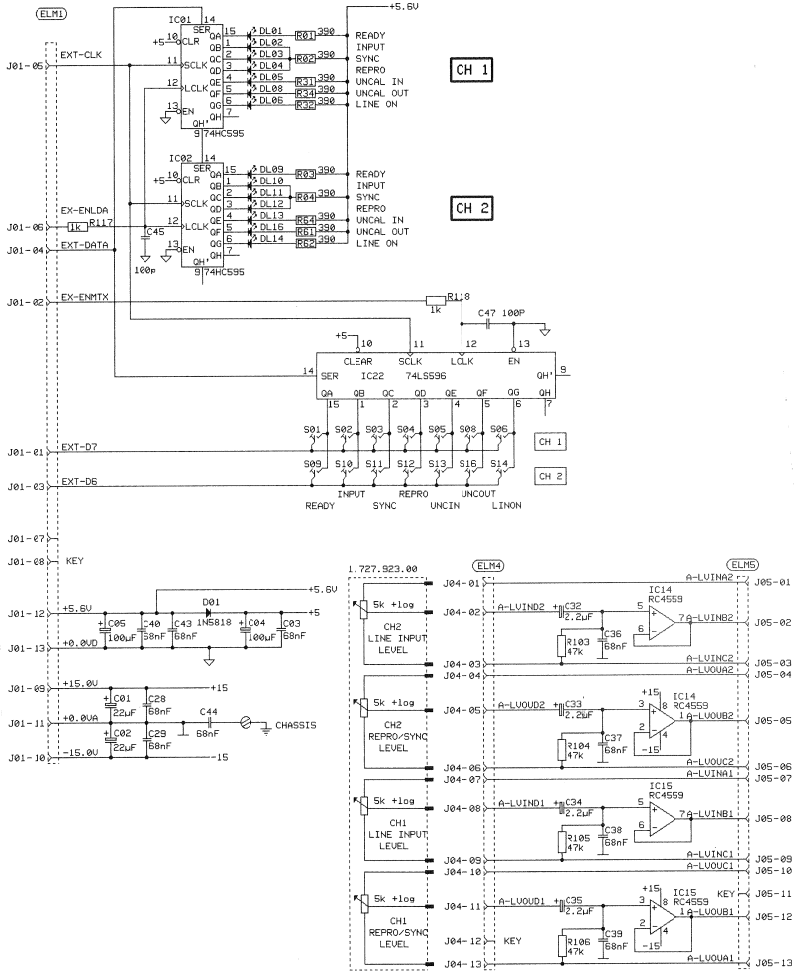

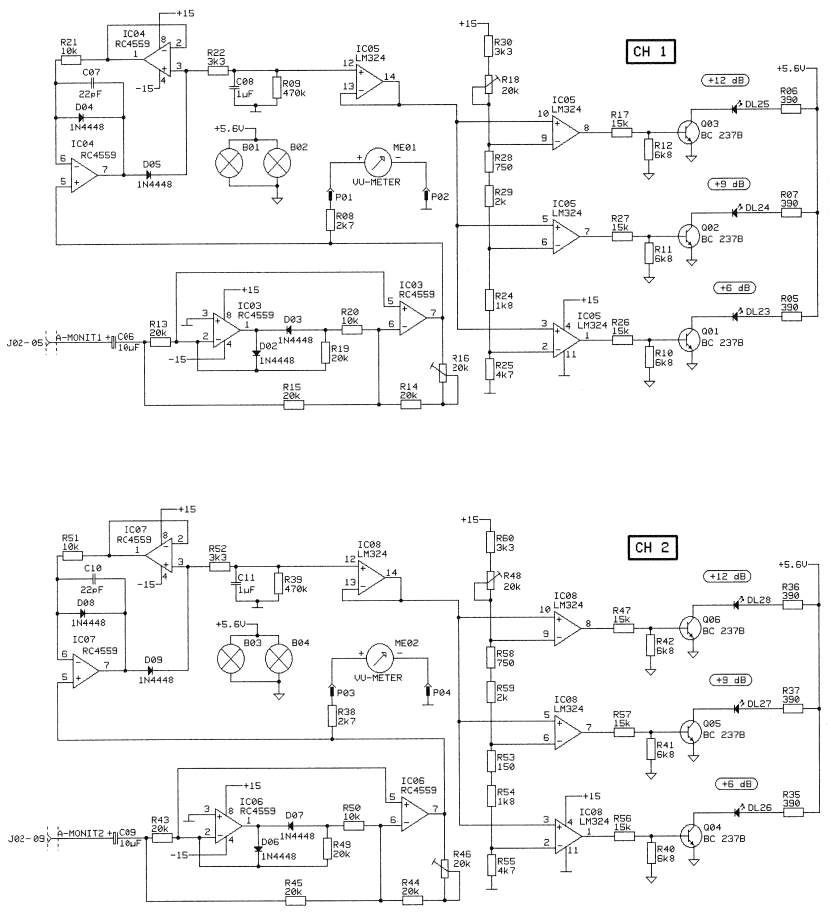

VU PANEL BOARD 2CH 1.727.928.83

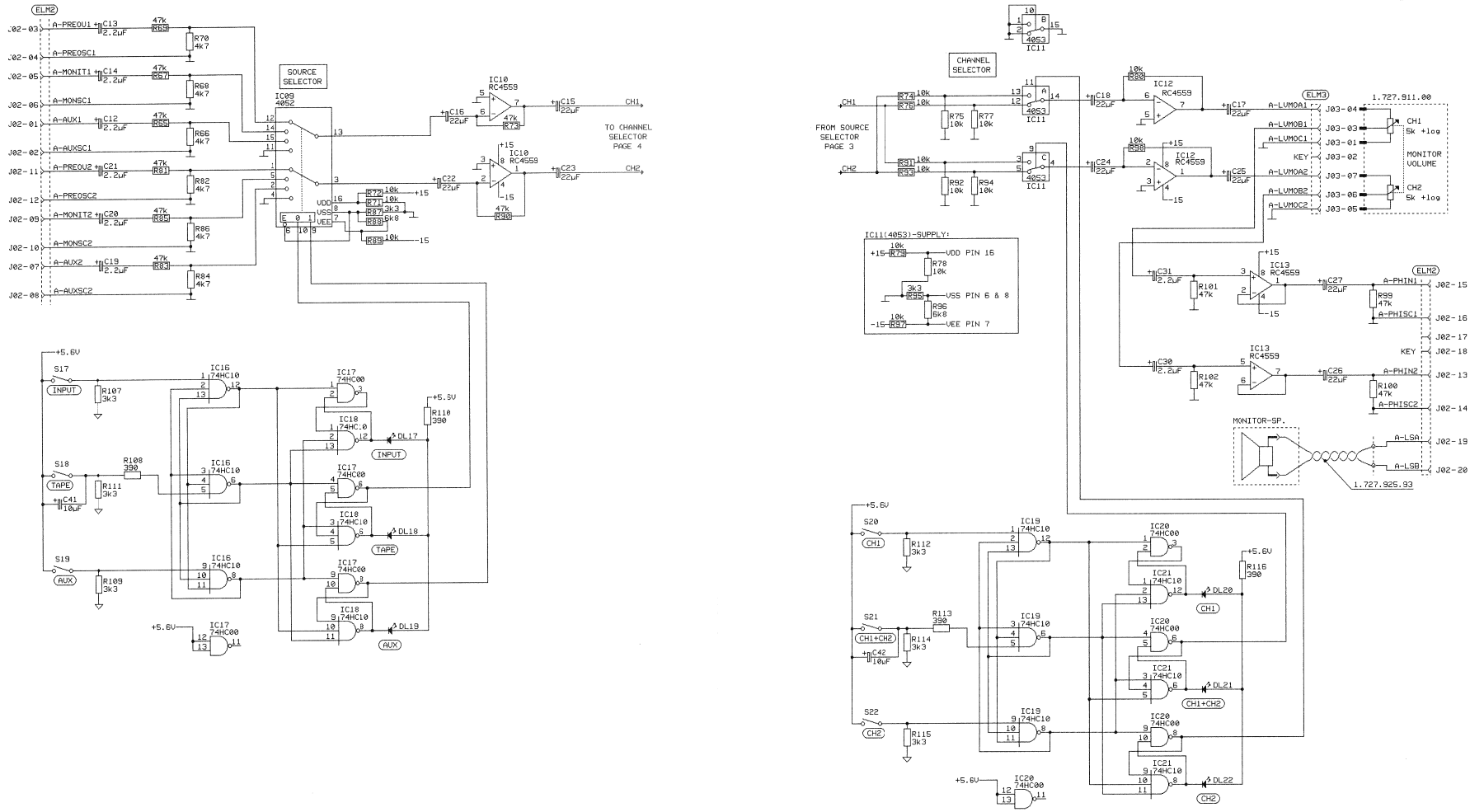

12.08.91 Wth	①	②	○	○
	A 807 VUK GRP 92			PAGE 3 OF 4
STUDER	VU-PANEL BOARD 2CH		SC	1.727.928-83

12.08.91 Wth	①	②	○	○
	A 807 VUK GRP 92			PAGE 4 OF 4
STUDER	VU-PANEL BOARD 2CH		SC	1.727.928-83

VU PANEL BOARD 2CH 1.727.928.83

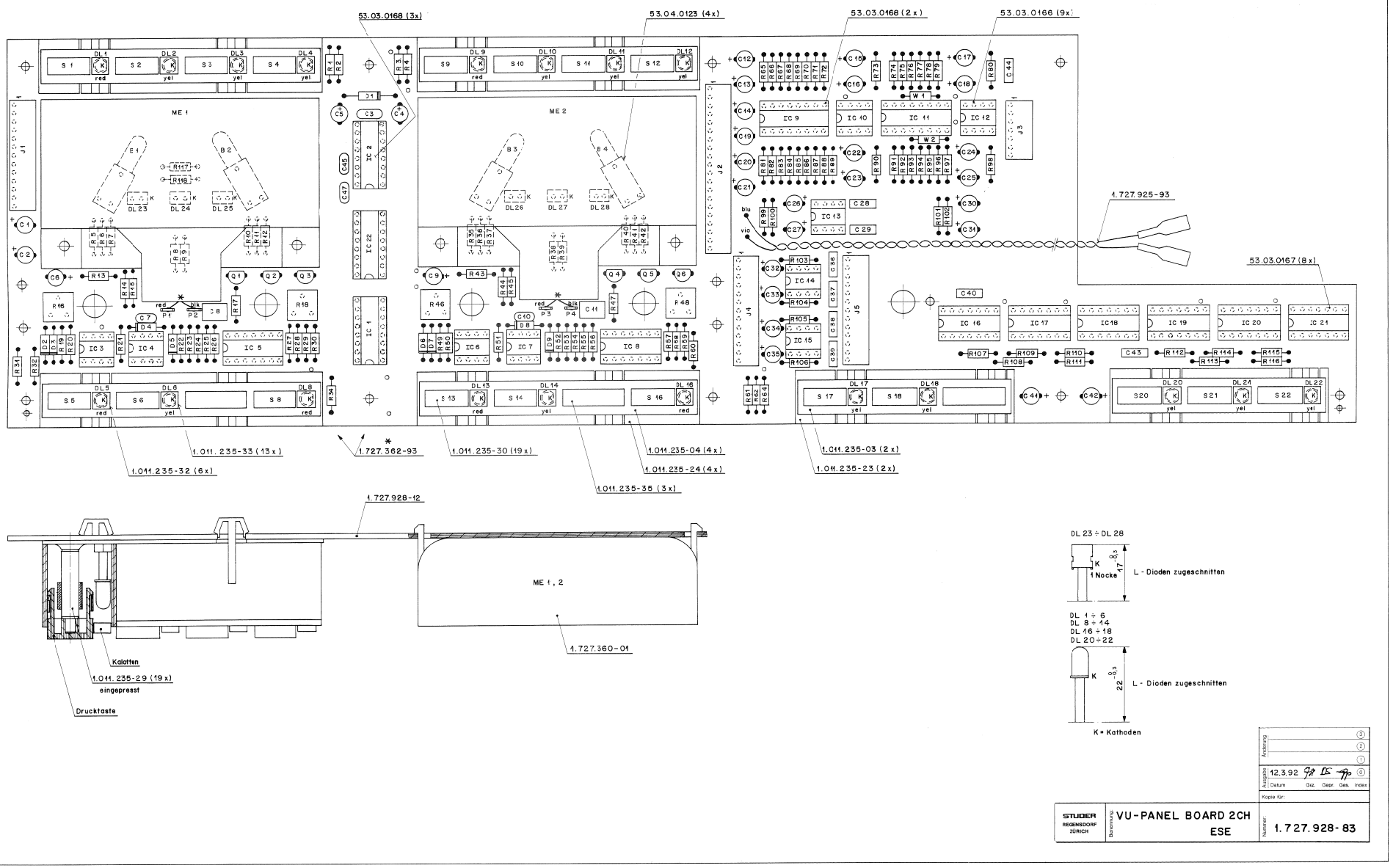

VU PANEL BOARD 2CH 1.727.928.83

Ad	..POS..	...REF.No...	DESCRIPTION	MANUFACTURER
	B....1	51.02.0144	6 V 0.03 A Bulb	
	B....2	51.02.0144	6 V 0.03 A Bulb	
	B....3	51.02.0144	6 V 0.03 A Bulb	
	B....4	51.02.0144	6 V 0.03 A Bulb	
	C....1	59.22.5220	22 uF -20% 25 V EL	
	C....2	59.22.5220	22 uF -20% 25 V EL	
	C....3	59.06.0683	68 nF 10% 50 V PETP	
	C....4	59.22.3101	100 uF -20% 10 V EL	
	C....5	59.22.3101	100 uF -20% 10 V EL	
	C....6	59.22.6100	10 uF -20% 25 V EL	
	C....7	59.34.2220	22 pF 10% 50 V CER	
	C....8	59.06.0105	1 uF 10% 50 V PETP	
	C....9	59.22.6100	10 uF -20% 25 V EL	
	C....10	59.34.2220	22 pF 10% 50 V CER	
	C....11	59.06.0105	1 uF 10% 50 V PETP	
	C....12	59.22.8229	2.2 uF -20% 25 V EL	
	C....13	59.22.8229	2.2 uF -20% 25 V EL	
	C....14	59.22.8229	2.2 uF -20% 25 V EL	
	C....15	59.22.5220	22 uF -20% 25 V EL	
	C....16	59.22.5220	22 uF -20% 25 V EL	
	C....17	59.22.5220	22 uF -20% 25 V EL	
	C....18	59.22.5220	22 uF -20% 25 V EL	
	C....19	59.22.8229	2.2 uF -20% 25 V EL	
	C....20	59.22.8229	2.2 uF -20% 25 V EL	
	C....21	59.22.8229	2.2 uF -20% 25 V EL	
	C....22	59.22.5220	22 uF -20% 25 V EL	
	C....23	59.22.5220	22 uF -20% 25 V EL	
	C....24	59.22.5220	22 uF -20% 25 V EL	
	C....25	59.22.5220	22 uF -20% 25 V EL	
	C....26	59.22.5220	22 uF -20% 25 V EL	
	C....27	59.22.5220	22 uF -20% 25 V EL	
	C....28	59.06.0683	68 nF 10% 50 V PETP	
	C....29	59.06.0683	68 nF 10% 50 V PETP	
	C....30	59.22.8229	2.2 uF -20% 25 V EL	
	C....31	59.22.8229	2.2 uF -20% 25 V EL	
	C....32	59.22.8229	2.2 uF -20% 25 V EL	
	C....33	59.22.8229	2.2 uF -20% 25 V EL	
	C....34	59.22.8229	2.2 uF -20% 25 V EL	
	C....35	59.22.8229	2.2 uF -20% 25 V EL	
	C....36	59.06.0683	68 nF 10% 50 V PETP	
	C....37	59.06.0683	68 nF 10% 50 V PETP	
	C....38	59.06.0683	68 nF 10% 50 V PETP	
	C....39	59.06.0683	68 nF 10% 50 V PETP	
	C....40	59.06.0683	68 nF 10% 50 V PETP	
	C....41	59.22.6100	10 uF -20% 25 V EL	
	C....42	59.22.6100	10 uF -20% 25 V EL	
	C....43	59.06.0683	68 nF 10% 50 V PETP	
	C....44	59.06.0683	68 nF 10% 50 V PETP	
	C....45	59.34.4101	100 pF 10% 50 V CER	
	C....47	59.34.4101	100 pF 10% 50 V CER	
	D....1	50.04.0512	1N5818 30 V Schottky	
	D....2	50.04.0125	1N4448 50 V Si	
	D....3	50.04.0125	1N4448 50 V Si	
	D....4	50.04.0125	1N4448 50 V Si	
	D....5	50.04.0125	1N4448 50 V Si	
	D....6	50.04.0125	1N4448 50 V Si	
	D....7	50.04.0125	1N4448 50 V Si	
	D....8	50.04.0125	1N4448 50 V Si	
	D....9	50.04.0125	1N4448 50 V Si	
	DL...1	50.04.2115	MV5752 LED red D=5 mm	GI
	DL...2	50.04.2500	MV5352 LED yel D=5 mm	GI
	DL...3	50.04.2500	MV5352 LED yel D=5 mm	GI
	DL...4	50.04.2500	MV5352 LED yel D=5 mm	GI
	DL...5	50.04.2115	MV5752 LED red D=5 mm	GI
	DL...6	50.04.2500	MV5352 LED yel D=5 mm	GI
	DL...8	50.04.2115	MV5752 LED red D=5 mm	GI
	DL...9	50.04.2115	MV5752 LED red D=5 mm	GI
	DL...10	50.04.2500	MV5352 LED yel D=5 mm	GI
	DL...11	50.04.2500	MV5352 LED yel D=5 mm	GI
	DL...12	50.04.2500	MV5352 LED yel D=5 mm	GI
	DL...13	50.04.2115	MV5752 LED red D=5 mm	GI
	DL...14	50.04.2500	MV5352 LED yel D=5 mm	GI
	DL...16	50.04.2115	MV5752 LED red D=5 mm	GI
	DL...17	50.04.2500	MV5352 LED yel D=5 mm	GI
	DL...18	50.04.2500	MV5352 LED yel D=5 mm	GI
	DL...19	00.00.0000	not used	
	DL...20	50.04.2500	MV5352 LED yel D=5 mm	GI
	DL...21	50.04.2500	MV5352 LED yel D=5 mm	GI
	DL...22	50.04.2500	MV5352 LED yel D=5 mm	GI
	DL...23	50.04.2119	MV57124 LED red 6.35*3.81	GI
	DL...24	50.04.2119	MV57124 LED red 6.35*3.81	GI
	DL...25	50.04.2119	MV57124 LED red 6.35*3.81	GI
	DL...26	50.04.2119	MV57124 LED red 6.35*3.81	GI
	DL...27	50.04.2119	MV57124 LED red 6.35*3.81	GI
	DL...28	50.04.2119	MV57124 LED red 6.35*3.81	GI
	IC....1	50.17.1595	74HC595 8-bit Shift Register tri	
	IC....2	50.17.1595	74HC595 8-bit Shift Register tri	
	IC....3	50.09.0107	RC 4559 Dual OpAmp	Ra
	IC....4	50.09.0107	RC 4559 Dual OpAmp	Ra
	IC....5	50.05.0199	LM 324 Quad OpAmp	NS,Mot
	IC....6	50.09.0107	RC 4559 Dual OpAmp	Ra
	IC....7	50.09.0107	RC 4559 Dual OpAmp	Ra
	IC....8	50.05.0199	LM 324 Quad OpAmp	NS,Mo
	IC....9	50.07.0024	MC 14052 CMOS Analog Switch	Mot
	IC...1C	50.09.0107	RC 4559 Dual OpAmp	Ra
	IC...11	50.07.0015	MC 14053 CMOS Analog Switch	Mot
	IC...12	50.09.0107	RC 4559 Dual OpAmp	Ra
	IC...13	50.09.0107	RC 4559 Dual OpAmp	Ra
	IC...14	50.09.0107	RC 4559 Dual OpAmp	Ra
	IC...15	50.09.0107	RC 4559 Dual OpAmp	Ra
	IC...16	50.17.1010	74HC10 Triple 3-Input NAND Gate	
	IC...17	50.17.1000	74HC00 Quad 2-Input NAND Gate	
	IC...18	50.17.1010	74HC10 Triple 3-Input NAND Gate	
	IC...19	50.17.1010	74HC10 Triple 3-Input NAND Gate	
	IC...20	50.17.1000	74HC00 Quad 2-Input NAND Gate	
	IC...21	50.17.1010	74HC10 Triple 3-Input NAND Gate	
	IC...22	50.06.0596	74LS596 8-bit Shift Register o.c.	
	J.....1	54.01.0299	13-pole CIS Socket Strip	AMP
	J.....2	54.01.0237	20-pole CIS Socket Strip	AMP
	J.....3	54.01.0263	7-pole CIS Socket Strip	AMP
	J.....4	54.01.0299	13-pole CIS Socket Strip	AMP
	J.....5	54.01.0299	13-pole CIS Socket Strip	AMP
	ME....1	1.727.360.01	VJ Meter	ST
	ME....2	1.727.360.01	VJ Meter	ST
	MP....1	43.01.0108	1 pcs ESE Warning label	
	MP....2	53.03.0221	26 pcs 2-pole LED Socket	
	MP....3	1.011.235.03	2 pcs Push button case 3*	ST
	MP....4	1.011.235.04	4 pcs Push button case 4*	ST
	MP....5	1.011.235.23	2 pcs Conductive rubber 3*	ST
	MP....6	1.011.235.24	4 pcs Conductive rubber 4*	ST
	MP....7	1.011.235.29	19 pcs Bolt	ST
	MP....8	1.011.235.30	19 pcs Push button 14*5	ST
	MP....9	1.011.235.32	6 pcs Calotte red	ST
	MP...10	1.011.235.33	13 pcs Calotte yel	ST
	MP...11	1.011.235.35	3 pcs Dummy push button 19*5	ST
	MP...12	1.727.362.93	2 pcs Wiring List VU-Meter	ST
	MP...13	1.727.928.10	1 pcs No. Label	ST
	MP...14	1.727.928.12	1 pcs VJ PANEL PCB	ST
	MP...15	1.727.925.93	1 pcs Wiring List VU-Panel Board	ST
	P.....1	54.02.0320	Plug 2.8*0.8	AMP
	P.....2	54.02.0320	Plug 2.8*0.8	AMP
	P.....3	54.02.0320	Plug 2.8*0.8	AMP
	P.....4	54.02.0320	Plug 2.8*0.8	AMP
	Q.....1	50.03.0436	BC237B BC547B, BC550B NPN	
	Q.....2	50.03.0436	BC237B BC547B, BC550B NPN	
	Q.....3	50.03.0436	BC237B BC547B, BC550B NPN	
	Q.....4	50.03.0436	BC237B BC547B, BC550B NPN	
	Q.....5	50.03.0436	BC237B BC547B, BC550B NPN	
	Q.....6	50.03.0436	BC237B BC547B, BC550B NPN	
	R.....1	57.11.3391	390 Ohm 1%, 0.25W, MF	
	R.....2	57.11.3391	390 Ohm 1%, 0.25W, MF	
	R.....3	57.11.3391	390 Ohm 1%, 0.25W, MF	
	R.....4	57.11.3391	390 Ohm 1%, 0.25W, MF	
	R.....5	57.11.3391	390 Ohm 1%, 0.25W, MF	
	R.....6	57.11.3391	390 Ohm 1%, 0.25W, MF	
	R.....7	57.11.3391	390 Ohm 1%, 0.25W, MF	
	R.....8	57.11.3272	2.7 kOhm 1%, 0.25W, MF	
	R.....9	57.11.3474	470 kOhm 1%, 0.25W, MF	
	R....10	57.11.3682	6.8 kOhm 1%, 0.25W, MF	
	R....11	57.11.3682	6.8 kOhm 1%, 0.25W, MF	
	R....12	57.11.3682	6.8 kOhm 1%, 0.25W, MF	
	R....13	57.11.3203	20 kOhm 1%, 0.25W, MF	
	R....14	57.11.3822	8.2 kOhm 1%, 0.25W, MF	
	R....15	57.11.3203	20 kOhm 1%, 0.25W, MF	
	R....16	58.01.8503	50 kOhm 10%, 0.5 W, PCerm	
	R....17	57.11.3153	15 kOhm 1%, 0.25W, MF	
	R....18	58.01.8503	50 kOhm 10%, 0.5 W, PCerm	
	R....19	57.11.3203	20 kOhm 1%, 0.25W, MF	
	R....20	57.11.3103	10 kOhm 1%, 0.25W, MF	
	R....21	57.11.3103	10 kOhm 1%, 0.25W, MF	
	R....22	57.11.3332	3.3 kOhm 1%, 0.25W, MF	
	R....23	57.11.3151	150 Ohm 1%, 0.25W, MF	
	R....24	57.11.3182	1.8 kOhm 1%, 0.25W, MF	
	R....25	57.11.3472	4.7 kOhm 1%, 0.25W, MF	
	R....26	57.11.3153	15 kOhm 1%, 0.25W, MF	
	R....27	57.11.3153	15 kOhm 1%, 0.25W, MF	
	R....28	57.11.3751	750 Ohm 1%, 0.25W, MF	
	R....29	57.11.3202	2 kOhm 1%, 0.25W, MF	
	R....30	57.11.3332	3.3 kOhm 1%, 0.25W, MF	
	R....31	57.11.3391	390 Ohm 1%, 0.25W, MF	
	R....32	57.11.3391	390 Ohm 1%, 0.25W, MF	
	R....34	57.11.3391	390 Ohm 1%, 0.25W, MF	
	R....35	57.11.3391	390 Ohm 1%, 0.25W, MF	
	R....36	57.11.3391	390 Ohm 1%, 0.25W, MF	
	R....37	57.11.3391	390 Ohm 1%, 0.25W, MF	
	R....38	57.11.3272	2.7 kOhm 1%, 0.25W, MF	
	R....39	57.11.3474	470 kOhm 1%, 0.25W, MF	
	R....40	57.11.3682	6.8 kOhm 1%, 0.25W, MF	
	R....41	57.11.3682	6.8 kOhm 1%, 0.25W, MF	
	R....42	57.11.3682	6.8 kOhm 1%, 0.25W, MF	
	R....43	57.11.3203	20 kOhm 1%, 0.25W, MF	
	R....44	57.11.3822	8.2 kOhm 1%, 0.25W, MF	
	R....45	57.11.3203	20 kOhm 1%, 0.25W, MF	
	R....46	58.01.8503	50 kOhm 10%, 0.5 W, PCerm	
	R....47	57.11.3153	15 kOhm 1%, 0.25W, MF	
	R....48	58.01.8503	50 kOhm 10%, 0.5 W, PCerm	
	R....49	57.11.3203	20 kOhm 1%, 0.25W, MF	
	R....50	57.11.3103	10 kOhm 1%, 0.25W, MF	
	R....51	57.11.3103	10 kOhm 1%, 0.25W, MF	
	R....52	57.11.3332	3.3 kOhm 1%, 0.25W, MF	
	R....53	57.11.3151	150 Ohm 1%, 0.25W, MF	
	R....54	57.11.3182	1.8 kOhm 1%, 0.25W, MF	
	R....55	57.11.3472	4.7 kOhm 1%, 0.25W, MF	
	R....56	57.11.3153	15 kOhm 1%, 0.25W, MF	
	R....57	57.11.3153	15 kOhm 1%, 0.25W, MF	
	R....58	57.11.3751	750 Ohm 1%, 0.25W, MF	
	R....59	57.11.3202	2 kOhm 1%, 0.25W, MF	
	R....60	57.11.3332	3.3 kOhm 1%, 0.25W, MF	
	R....61	57.11.3391	390 Ohm 1%, 0.25W, MF	
	R....62	57.11.3391	390 Ohm 1%, 0.25W, MF	
	R....64	57.11.3391	390 Ohm 1%, 0.25W, MF	
	R....65	57.11.3473	47 kOhm 1%, 0.25W, MF	
	R....66	57.11.3472	4.7 kOhm 1%, 0.25W, MF	
	R....67	57.11.3473	47 kOhm 1%, 0.25W, MF	
	R....68	57.11.3472	4.7 kOhm 1%, 0.25W, MF	
	R....69	57.11.3473	47 kOhm 1%, 0.25W, MF	
	R....70	57.11.3472	4.7 kOhm 1%, 0.25W, MF	
	R....71	57.11.3103	10 kOhm 1%, 0.25W, MF	
	R....72	57.11.3103	10 kOhm 1%, 0.25W, MF	
	R....73	57.11.3473	47 kOhm 1%, 0.25W, MF	
	R....74	57.11.3103	10 kOhm 1%, 0.25W, MF	
	R....75	57.11.3103	10 kOhm 1%, 0.25W, MF	
	R....76	57.11.3103	10 kOhm 1%, 0.25W, MF	
	R....77	57.11.3103	10 kOhm 1%, 0.25W, MF	
	R....78	57.11.3103	10 kOhm 1%, 0.25W, MF	
	R....79	57.11.3103	10 kOhm 1%, 0.25W, MF	
	R....80	57.11.3103	10 kOhm 1%, 0.25W, MF	
	R....81	57.11.3473	47 kOhm 1%, 0.25W, MF	
	R....82	57.11.3472	4.7 kOhm 1%, 0.25W, MF	
	R....83	57.11.3473	47 kOhm 1%, 0.25W, MF	
	R....84	57.11.3472	4.7 kOhm 1%, 0.25W, MF	
	R....85	57.11.3473	47 kOhm 1%, 0.25W, MF	
	R....86	57.11.3472	4.7 kOhm 1%, 0.25W, MF	
	R....87	57.11.3332	3.3 kOhm 1%, 0.25W, MF	
	R....88	57.11.3682	6.8 kOhm 1%, 0.25W, MF	
	R....89	57.11.3103	10 kOhm 1%, 0.25W, MF	
	R....90	57.11.3473	47 kOhm 1%, 0.25W, MF	
	R....91	57.11.3103	10 kOhm 1%, 0.25W, MF	
	R....92	57.11.3103	10 kOhm 1%, 0.25W, MF	
	R....93	57.11.3103	10 kOhm 1%, 0.25W, MF	
	R....94	57.11.3103	10 kOhm 1%, 0.25W, MF	
	R....95	57.11.3332	3.3 kOhm 1%, 0.25W, MF	
	R....96	57.11.3682	6.8 kOhm 1%, 0.25W, MF	
	R....97	57.11.3103	10 kOhm 1%, 0.25W, MF	
	R....98	57.11.3103	10 kOhm 1%, 0.25W, MF	
	R....99	57.11.3473	47 kOhm 1%, 0.25W, MF	
	R...100	57.11.3473	47 kOhm 1%, 0.25W, MF	
	R...101	57.11.3473	47 kOhm 1%, 0.25W, MF	
	R...102	57.11.3473	47 kOhm 1%, 0.25W, MF	
	R...103	57.11.3473	47 kOhm 1%, 0.25W, MF	
	R...104	57.11.3473	47 kOhm 1%, 0.25W, MF	
	R...105	57.11.3473	47 kOhm 1%, 0.25W, MF	
	R...106	57.11.3473	47 kOhm 1%, 0.25W, MF	
	R...107	57.11.3332	3.3 kOhm 1%, 0.25W, MF	
	R...108	57.11.3391	390 Ohm 1%, 0.25W, MF	
	R...109	57.11.3332	3.3 kOhm 1%, 0.25W, MF	
	R...110	57.11.3391	390 Ohm 1%, 0.25W, MF	
	R...111	57.11.3332	3.3 kOhm 1%, 0.25W, MF	
	R...112	57.11.3332	3.3 kOhm 1%, 0.25W, MF	
	R...113	57.11.3391	390 Ohm 1%, 0.25W, MF	
	R...114	57.11.3332	3.3 kOhm 1%, 0.25W, MF	
	R...115	57.11.3332	3.3 kOhm 1%, 0.25W, MF	
	R...116	57.11.3391	390 Ohm 1%, 0.25W, MF	
	R...117	57.11.3102	1 kOhm 1%, 0.25W, MF	
	R...118	57.11.3102	1 kOhm 1%, 0.25W, MF	
	X3....1	53.04.0123	Bulb Socket	
	X3....2	53.04.0123	Bulb Socket	
	X3....3	53.04.0123	Bulb Socket	
	X3....4	53.04.0123	Bulb Socket	
	XIC...1	53.03.0168	16-pole IC Socket	
	XIC...2	53.03.0168	16-pole IC Socket	
	XIC...3	53.03.0166	8-pole IC Socket	
	XIC...4	53.03.0166	8-pole IC Socket	
	XIC...5	53.03.0167	14-pole IC Socket	
	XIC...6	53.03.0166	8-pole IC Socket	
	XIC...7	53.03.0166	8-pole IC Socket	
	XIC...8	53.03.0167	14-pole IC Socket	
	XIC...9	53.03.0168	16-pole IC Socket	
	XIC..10	53.03.0166	8-pole IC Socket	
	XIC..11	53.03.0168	16-pole IC Socket	
	XIC..12	53.03.0166	8-pole IC Socket	
	XIC..13	53.03.0166	8-pole IC Socket	
	XIC..14	53.03.0166	8-pole IC Socket	
	XIC..15	53.03.0166	8-pole IC Socket	
	XIC..16	53.03.0167	14-pole IC Socket	
	XIC..17	53.03.0167	14-pole IC Socket	
	XIC..18	53.03.0167	14-pole IC Socket	
	XIC..19	53.03.0167	14-pole IC Socket	
	XIC..20	53.03.0167	14-pole IC Socket	
	XIC..21	53.03.0167	14-pole IC Socket	
	XIC..22	53.03.0168	16-pole IC Socket	

CER= Ceramic, EL= Electrolytic, PETP= Polyester, SI= Silicon,
MF= Metal Film, PCerm= Potentiometer Cermet,
MANUFACTURER: GI= General Instruments, Mot= Motorola, ST= STUDER
NS= National Semiconductor, Ra= Raytheon

1.727.928.83 VU PANEL BOARD 2CH GP 92/03/0600

END

VU PANEL BOARD MONO 1.727.938.83

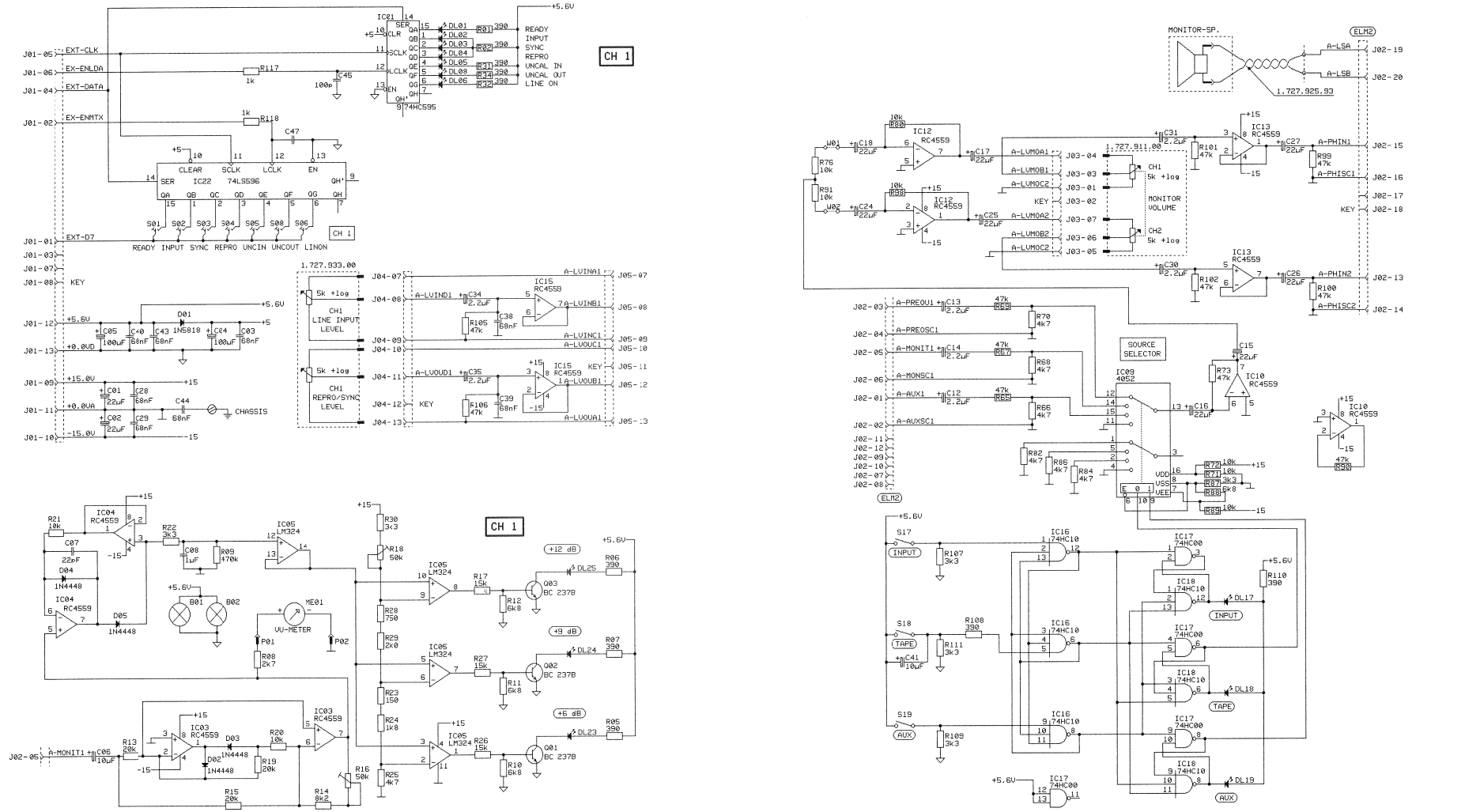

12.08.91 Wth	1	2		
	A 807 GR 92			PAGE 1 OF 2
STUDER	VU-PANEL BOARD MONO		SC	1.727.938.83

12.08.91 Wth	1	2		
	A 807 GR 92			PAGE 2 OF 2
STUDER	VU-PANEL BOARD MONO			1.727.938.83

VU PANEL BOARD MONO 1.727.938.83

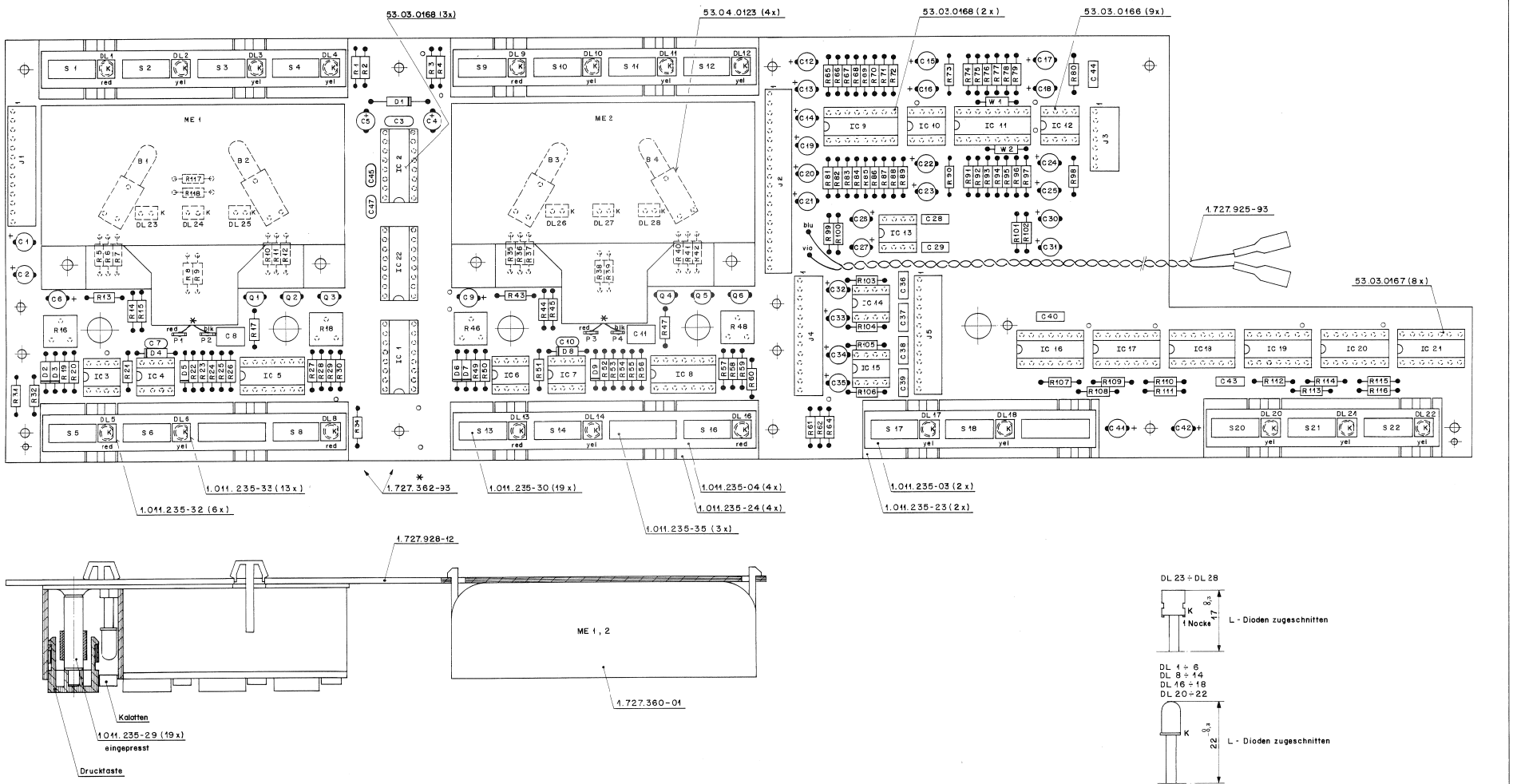

Änderung					③ ② ①
Ausgabe	12.3.92				⓪
Datum	Gez.	Gepr.	Ges.	Index	
Kopie für:					

STUDER REGENSDORF ZÜRICH	Benennung: VU-PANEL BOARD 2CH ESE	Nummer: 1.727.938.83

VU PANEL BOARD MONO 1.727.938.83

Ad	..POS..	...REF.No...	DESCRIPTION				MANUFACTURER
	B.....1	51.02.0144	6 V	0.03 A		Lamp	
	B.....2	51.02.0144	6 V	0.03 A		Lamp	
	C.....1	59.22.5220	22 uF	-20%	25 V	EL	
	C.....2	59.22.5220	22 uF	-20%	25 V	EL	
	C.....3	59.06.0683	68 nF	10%	50 V	PETP	
	C.....4	59.22.3101	100 uF	-20%	10 V	EL	
	C.....5	59.22.3101	100 uF	-20%	10 V	EL	
	C.....6	59.22.6100	10 uF	-20%	25 V	EL	
	C.....7	59.34.2220	22 pF	10%	50 V	CER	
	C.....8	59.06.0105	1 uF	10%	50 V	PETP	
	C....12	59.22.8229	2.2 uF	-20%	25 V	EL	
	C....13	59.22.8229	2.2 uF	-20%	25 V	EL	
	C....14	59.22.8229	2.2 uF	-20%	25 V	EL	
	C....15	59.22.5220	22 uF	-20%	25 V	EL	
	C....16	59.22.5220	22 uF	-20%	25 V	EL	
	C....17	59.22.5220	22 uF	-20%	25 V	EL	
	C....18	59.22.5220	22 uF	-20%	25 V	EL	
	C....24	59.22.5220	22 uF	-20%	25 V	EL	
	C....25	59.22.5220	22 uF	-20%	25 V	EL	
	C....26	59.22.5220	22 uF	-20%	25 V	EL	
	C....27	59.22.5220	22 uF	-20%	25 V	EL	
	C....28	59.06.0683	68 nF	10%	50 V	PETP	
	C....29	59.06.0683	68 nF	10%	50 V	PETP	
	C....30	59.22.8229	2.2 uF	-20%	25 V	EL	
	C....31	59.22.8229	2.2 uF	-20%	25 V	EL	
	C....34	59.22.8229	2.2 uF	-20%	25 V	EL	
	C....35	59.22.8229	2.2 uF	-20%	25 V	EL	
	C....38	59.06.0683	68 nF	10%	50 V	PETP	
	C....39	59.06.0683	68 nF	10%	50 V	PETP	
	C....40	59.06.0683	68 nF	10%	50 V	PETP	
	C....41	59.22.6100	10 uF	-20%	25 V	EL	
	C....43	59.06.0683	68 nF	10%	50 V	PETP	
	C....44	59.06.0683	68 nF	10%	50 V	PETP	
	C....45	59.34.4101	100 pF	10%	50 V	CER	
	C....47	59.34.4101	100 pF	10%	50 V	CER	
	D.....1	50.04.0512	1N5818		30 V	Schottky	
	D.....2	50.04.0125	1N4448		50 V	SI	
	D.....3	50.04.0125	1N4448		50 V	SI	
	D.....4	50.04.0125	1N4448		50 V	SI	
	D.....5	50.04.0125	1N4448		50 V	SI	
	DL....1	50.04.2115	MV5752	LED red D=5 mm			GI
	DL....2	50.04.2500	MV5352	LED yel D=5 mm			GI
	DL....3	50.04.2500	MV5352	LED yel D=5 mm			GI
	DL....4	50.04.2500	MV5352	LED yel D=5 mm			GI
	DL....5	50.04.2115	MV5752	LED red D=5 mm			GI
	DL....6	50.04.2500	MV5352	LED yel D=5 mm			GI
	DL....8	50.04.2115	MV5752	LED red D=5 mm			GI
	DL...17	50.04.2500	MV5352	LED yel D=5 mm			GI
	DL...18	50.04.2500	MV5352	LED yel D=5 mm			GI
	DL...19	00.00.0000		not used			
	DL...23	50.04.2119	MV57124	LED red 6.35*3.81			GI
	DL...24	50.04.2119	MV57124	LED red 6.35*3.81			GI
	DL...25	50.04.2119	MV57124	LED red 6.35*3.81			GI
	IC....1	50.17.1595	74 HC 595	8-bit Shift Register tri			
	IC....3	50.09.0107	RC 4559	Dual Op. Amp.			Ra
	IC....4	50.09.0107	RC 4559	Dual Op. Amp.			Ra
	IC....5	50.05.0199	LM 324	Quad Op. Amp.			NS,Mot
	IC....9	50.07.0024	MC 14052	CMOS Analog Switch			Mot
	IC...10	50.09.0107	RC 4559	Dual Op. Amp.			Ra
	IC...12	50.09.0107	RC 4559	Dual Op. Amp.			Ra
	IC...13	50.09.0107	RC 4559	Dual Op. Amp.			Ra
	IC...15	50.09.0107	RC 4559	Dual Op. Amp.			Ra
	IC...16	50.17.1010	74 HC 10	Triple 3-Input NAND Gate			
	IC...17	50.17.1000	74 HC 00	Quad 2-Input NAND Gate			
	IC...18	50.17.1010	74 HC 10	Triple 3-Input NAND Gate			
	IC...22	50.06.0596	74 LS 596	8-bic Shift Register o.c			
	J.....1	54.01.0299	13-Pole	CIS Socket Strip			AMP
	J.....2	54.01.0237	20-Pole	CIS Socket Strip			AMP
	J.....3	54.01.0263	7-Pole	CIS Socket Strip			AMP
	J.....4	54.01.0299	13-Pole	CIS Socket Strip			AMP
	J.....5	54.01.0299	13-Pole	CIS Socket Strip			AMP
	ME....1	1.727.360.01		VU Meter			
	MP....1	43.01.0108	1 pcs	ESE Warning label			
	MP....2	53.03.0221	13 pcs	2-pole LED Socket			
	MP....3	1.011.235.03	1 pcs	Push button case 3*			
	MP....4	1.011.235.04	2 pcs	Push button case 4*			
	MP....5	1.011.235.23	1 pcs	Conductive rubber 3*			
	MP....6	1.011.235.24	2 pcs	Conductive rubber 4*			
	MP....7	1.011.235.29	9 pcs	Bolt			
	MP....8	1.011.235.30	9 pcs	Push button 14*5			
	MP....9	1.011.235.32	3 pcs	Calotte red			
	MP...10	1.011.235.33	6 pcs	Calotte yel			
	MP...11	1.011.235.35	2 pcs	Dummy push button 19*5			
	MP...12	1.727.362.93	1 pcs	L-LST Command Panel Board			
	MP...13	1.727.938.10	1 pcs	No. Label			
	MP...14	1.727.928.12	1 pcs	VU PANEL PCB			
	MP...15	1.727.925.93	1 pcs	L-LST VU PANEL BOARD			
	P.....1	54.02.0320		Plug 2.8*0.8			AMP
	P.....2	54.02.0320		Plug 2.8*0.8			AMP

Ad	..POS..	...REF.No...	DESCRIPTION				MANUFACTURER
	Q.....1	50.03.0436	BC237B	BC547B, BC550B			NPN
	Q.....2	50.03.0436	BC237B	BC547B, BC550B			NPN
	Q.....3	50.03.0436	BC237B	BC547B, BC550B			NPN
	R.....1	57.11.3391	390 Ohm	1%, 0.25W, MF			
	R.....2	57.11.3391	390 Ohm	1%, 0.25W, MF			
	R.....5	57.11.3391	390 Ohm	1%, 0.25W, MF			
	R.....6	57.11.3391	390 Ohm	1%, 0.25W, MF			
	R.....7	57.11.3391	390 Ohm	1%, 0.25W, MF			
	R.....8	57.11.3272	2.7 kOhm	1%, 0.25W, MF			
	R.....9	57.11.3474	470 kOhm	1%, 0.25W, MF			
	R....10	57.11.3682	6.8 kOhm	1%, 0.25W, MF			
	R....11	57.11.3682	6.8 kOhm	1%, 0.25W, MF			
	R....12	57.11.3682	6.8 kOhm	1%, 0.25W, MF			
	R....13	57.11.3203	20 kOhm	1%, 0.25W, MF			
	R....14	57.11.3822	8.2 kOhm	1%, 0.25W, MF			
	R....15	57.11.3203	20 kOhm	1%, 0.25W, MF			
	R....16	58.01.8503	50 kOhm	10%, 0.5 W, PCerm			
	R....17	57.11.3153	15 kOhm	1%, 0.25W, MF			
	R....18	58.01.8503	50 kOhm	10%, 0.5 W, PCerm			
	R....19	57.11.3203	20 kOhm	1%, 0.25W, MF			
	R....20	57.11.3103	10 kOhm	1%, 0.25W, MF			
	R....21	57.11.3103	10 kOhm	1%, 0.25W, MF			
	R....22	57.11.3332	3.3 kOhm	1%, 0.25W, MF			
	R....23	57.11.3151	150 Ohm	1%, 0.25W, MF			
	R....24	57.11.3182	1.8 kOhm	1%, 0.25W, MF			
	R....25	57.11.3472	4.7 kOhm	1%, 0.25W, MF			
	R....26	57.11.3153	15 kOhm	1%, 0.25W, MF			
	R....27	57.11.3153	15 kOhm	1%, 0.25W, MF			
	R....28	57.11.3751	750 Ohm	1%, 0.25W, MF			
	R....29	57.11.3202	2 kOhm	1%, 0.25W, MF			
	R....30	57.11.3332	3.3 kOhm	1%, 0.25W, MF			
	R....31	57.11.3391	390 Ohm	1%, 0.25W, MF			
	R....32	57.11.3391	390 Ohm	1%, 0.25W, MF			
	R....34	57.11.3391	390 Ohm	1%, 0.25W, MF			
	R....65	57.11.3473	47 kOhm	1%, 0.25W, MF			
	R....66	57.11.3472	4.7 kOhm	1%, 0.25W, MF			
	R....67	57.11.3473	47 kOhm	1%, 0.25W, MF			
	R....68	57.11.3472	4.7 kOhm	1%, 0.25W, MF			
	R....69	57.11.3473	47 kOhm	1%, 0.25W, MF			
	R....70	57.11.3472	4.7 kOhm	1%, 0.25W, MF			
	R....71	57.11.3103	10 kOhm	1%, 0.25W, MF			
	R....72	57.11.3103	10 kOhm	1%, 0.25W, MF			
	R....73	57.11.3473	47 kOhm	1%, 0.25W, MF			
	R....76	57.11.3103	10 kOhm	1%, 0.25W, MF			
	R....80	57.11.3103	10 kOhm	1%, 0.25W, MF			
	R....82	57.11.3472	4.7 kOhm	1%, 0.25W, MF			
	R....84	57.11.3472	4.7 kOhm	1%, 0.25W, MF			
	R....86	57.11.3472	4.7 kOhm	1%, 0.25W, MF			
	R....87	57.11.3332	3.3 kOhm	1%, 0.25W, MF			
	R....88	57.11.3682	6.8 kOhm	1%, 0.25W, MF			
	R....89	57.11.3103	10 kOhm	1%, 0.25W, MF			
	R....90	57.11.3473	47 kOhm	1%, 0.25W, MF			
	R....91	57.11.3103	10 kOhm	1%, 0.25W, MF			
	R....98	57.11.3103	10 kOhm	1%, 0.25W, MF			
	R....99	57.11.3473	47 kOhm	1%, 0.25W, MF			
	R...100	57.11.3473	47 kOhm	1%, 0.25W, MF			
	R...101	57.11.3473	47 kOhm	1%, 0.25W, MF			
	R...102	57.11.3473	47 kOhm	1%, 0.25W, MF			
	R...105	57.11.3473	47 kOhm	1%, 0.25W, MF			
	R...106	57.11.3473	47 kOhm	1%, 0.25W, MF			
	R...107	57.11.3332	3.3 kOhm	1%, 0.25W, MF			
	R...108	57.11.3391	390 Ohm	1%, 0.25W, MF			
	R...109	57.11.3332	3.3 kOhm	1%, 0.25W, MF			
	R...110	57.11.3391	390 Ohm	1%, 0.25W, MF			
	R...111	57.11.3332	3.3 kOhm	1%, 0.25W, MF			
	R...117	57.11.3102	1 kOhm	1%, 0.25W, MF			
	R...118	57.11.3102	1 kOhm	1%, 0.25W, MF			
	W.....1	57.11.3000		Bridge			
	W.....2	57.11.3000		Bridge			
	XB....1	53.04.0123		Bulb Socket			
	XB....2	53.04.0123		Bulb Socket			
	XIC...1	53.03.0168	16-Pole	IC Socket			
	XIC...3	53.03.0166	8-Pole	IC Socket			
	XIC...4	53.03.0166	8-Pole	IC Socket			
	XIC...5	53.03.0167	14-Pole	IC Socket			
	XIC...9	53.03.0168	16-Pole	IC Socket			
	XIC..10	53.03.0166	8-Pole	IC Socket			
	XIC..12	53.03.0166	8-Pole	IC Socket			
	XIC..13	53.03.0166	8-Pole	IC Socket			
	XIC..15	53.03.0166	8-Pole	IC Socket			
	XIC..16	53.03.0167	14-Pole	IC Socket			
	XIC..17	53.03.0167	14-Pole	IC Socket			
	XIC..18	53.03.0167	14-Pole	IC Socket			
	XIC..22	53.03.0168	16-Pole	IC-Socket			

CER= Ceramic, EL= Electrolytic, PETP= Polyester, SI= Silicon,
MF= Metal Film, PCerm= Potentiometer Cermet,
MANUFACTURER: GI= General Instruments, Mot= Motorola, ST= STUDER
NS= National Semiconductor , Ra= Raytheon

1.727.938.83 VU PANEL BOARD MONO GP 92/03/0600

END

VU-PANEL BOARD (4CH) 1.727.945.82

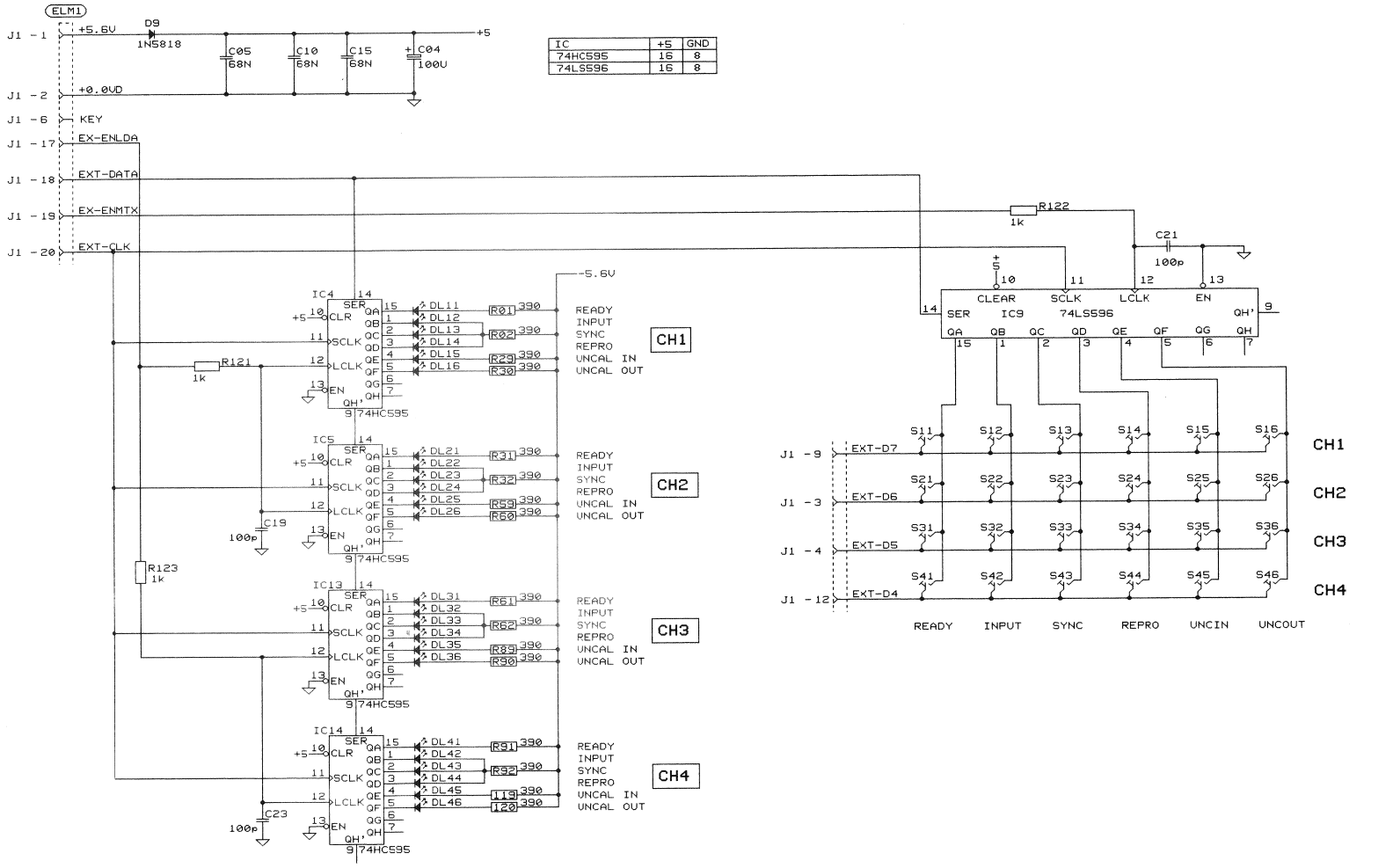

0 12.08.91 Wth	1	2		
	A 807-4 GR 94			PAGE 1 OF 3
STUDER	VU-PANEL BOARD 4CH		SCH	1.727.945-82

VU-PANEL BOARD (4CH) 1.727.945.82

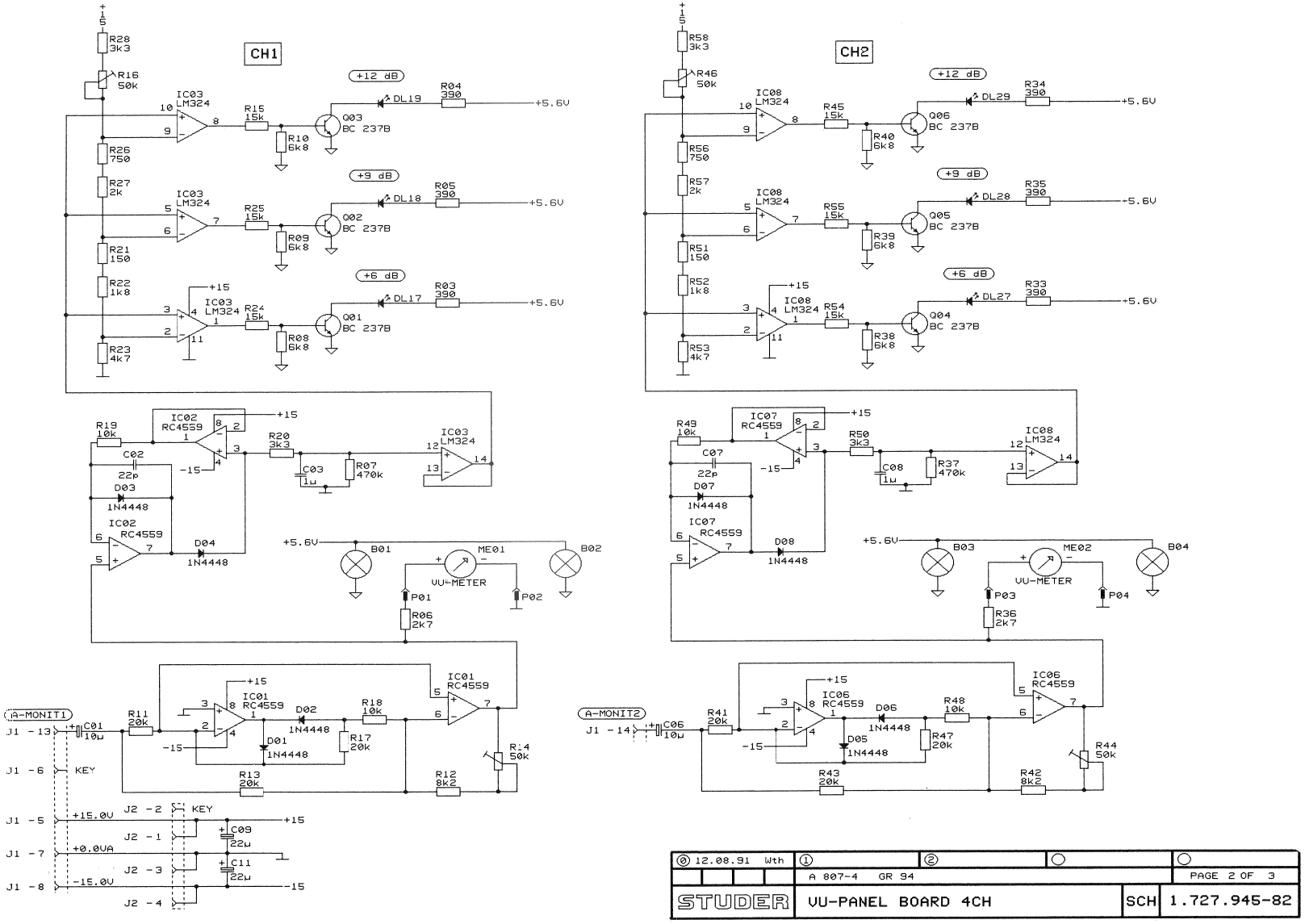

⓪ 12.08.91 Wth	①	②	○	○
	A 807-4 GR 94			PAGE 2 OF 3
STUDER	VU-PANEL BOARD 4CH		SCH	1.727.945-82

VU-PANEL BOARD (4CH) 1.727.945.82

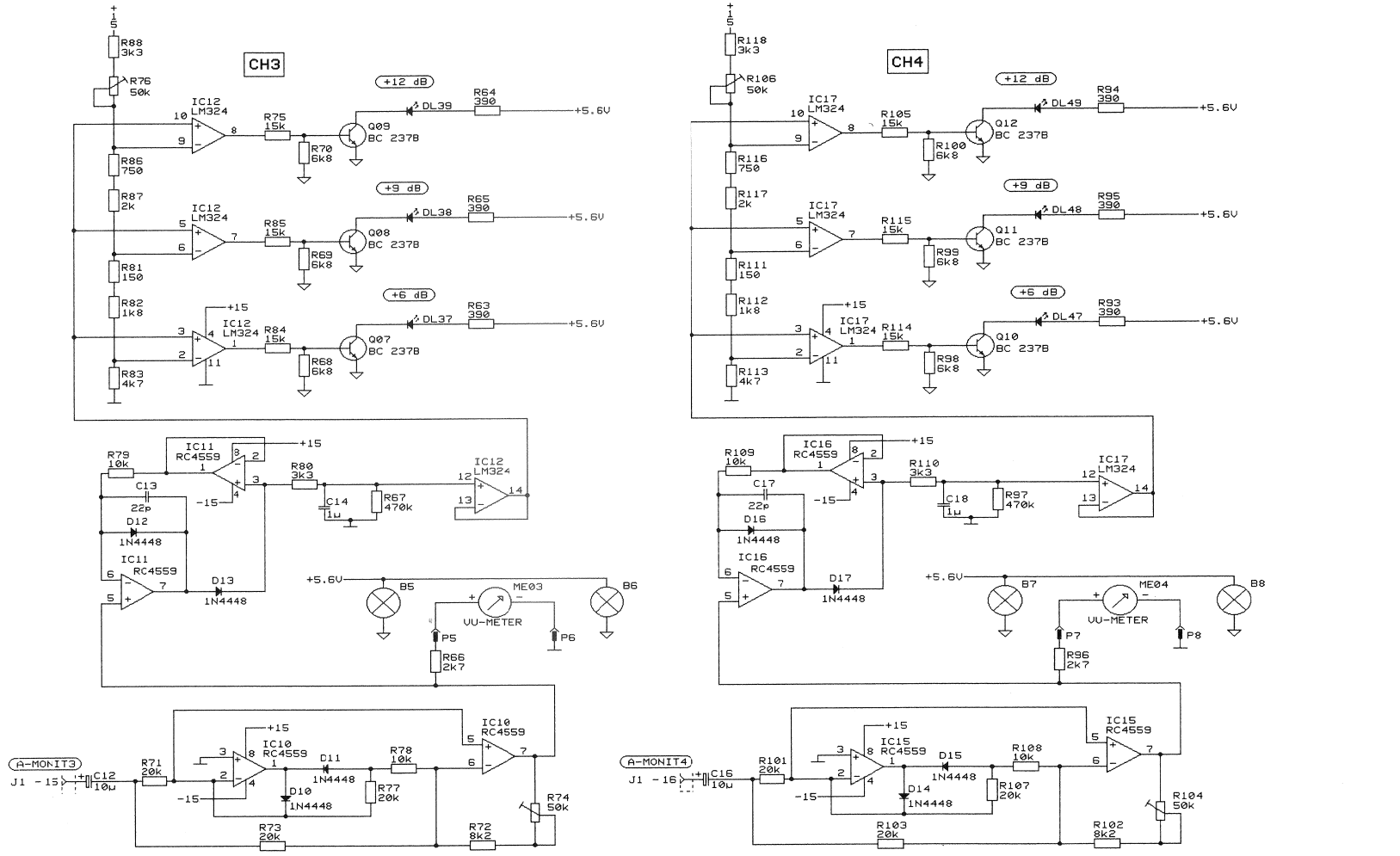

⓪ 12.08.91 Wth	①	②	○	○
	A 807-4 GR 94			PAGE 3 OF 3
STUDER	VU-PANEL BOARD 4CH		SCH	1.727.945-82

VU-PANEL BOARD (4CH) 1.727.945.82

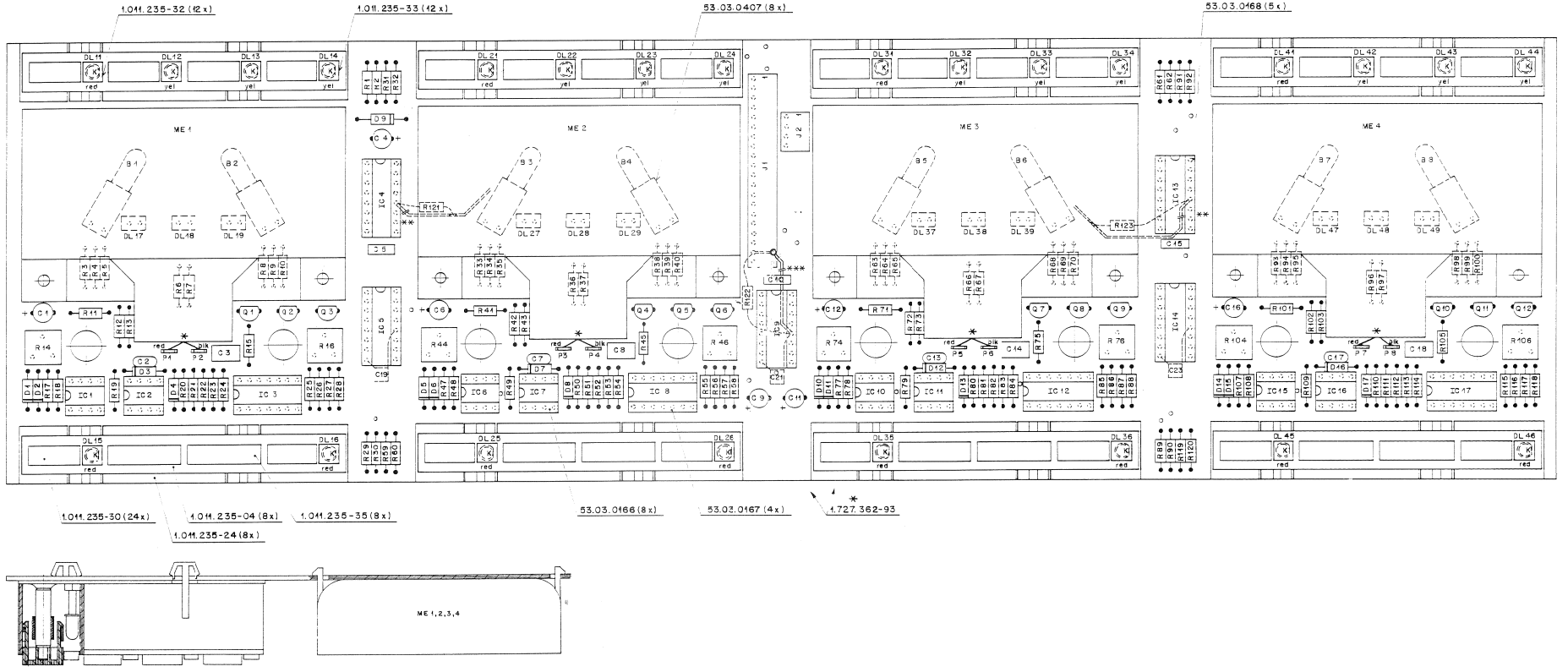

IND.	POS.NO.	PART NO.	VALUE	SPECIFICATIONS / EQUIVALENT	MANUF.
	B....1	51.02.0144	6 V	0.03 A Lamp	
	B....2	51.02.0144	6 V	0.03 A Lamp	
	B....3	51.02.0144	6 V	0.03 A Lamp	
	B....4	51.02.0144	6 V	0.03 A Lamp	
	B....5	51.02.0144	6 V	0.03 A Lamp	
	B....6	51.02.0144	6 V	0.03 A Lamp	
	B....7	51.02.0144	6 V	0.03 A Lamp	
	B....8	51.02.0144	6 V	0.03 A Lamp	
	C....1	59.22.6100	10 uF	-20% 25 V EL	
	C....2	59.34.2220	22 pF	10% 50 V CER	
	C....3	59.06.0105	1 uF	10% 50 V PETP	
	C....4	59.22.3101	100 uF	-20% 10 V EL	
	C....5	59.06.0683	68 nF	10% 50 V PETP	
	C....6	59.22.6100	10 uF	-20% 25 V EL	
	C....7	59.34.2220	22 pF	10% 50 V CER	
	C....8	59.06.0105	1 uF	10% 50 V PETP	
	C....9	59.22.5220	22 uF	-20% 25 V EL	
	C....10	59.06.0683	68 nF	10% 50 V PETP	
	C....11	59.22.5220	22 uF	-20% 25 V EL	
	C....12	59.22.6100	10 uF	-20% 25 V EL	
	C....13	59.34.2220	22 pF	10% 50 V CER	
	C....14	59.06.0105	1 uF	10% 50 V PETP	
	C....15	59.06.0683	68 nF	10% 50 V PETP	
	C....16	59.22.6100	10 uF	-20% 25 V EL	
	C....17	59.34.2220	22 pF	10% 50 V CER	
	C....18	59.06.0105	1 uF	10% 50 V PETP	
	C....19	59.45.4101	100 pF	10% 50 V CER	
	C....20			not used	
	C....21	59.45.4101	100 pF	10% 50 V CER	
	C....22			not used	
	C....23	59.45.4101	100 pF	10% 50 V CER	
	D....1	50.04.0125	1N4448	50 V Si	
	D....2	50.04.0125	1N4448	50 V Si	
	D....3	50.04.0125	1N4448	50 V Si	
	D....4	50.04.0125	1N4448	50 V Si	

IND.	POS.NO.	PART NO.	VALUE	SPECIFICATIONS / EQUIVALENT	MANUF.
	D....5	50.04.0125	1N4448	50 V Si	
	D....6	50.04.0125	1N4448	50 V Si	
	D....7	50.04.0125	1N4448	50 V Si	
	D....8	50.04.0125	1N4448	50 V Si	
	D....9	50.04.0812	1N5818	30 V Schottky	
	D....10	50.04.0125	1N4448	50 V Si	
	D....11	50.04.0125	1N4448	50 V Si	
	D....12	50.04.0125	1N4448	50 V Si	
	D....13	50.04.0125	1N4448	50 V Si	
	D....14	50.04.0125	1N4448	50 V Si	
	D....15	50.04.0125	1N4448	50 V Si	
	D....16	50.04.0125	1N4448	50 V Si	
	D....17	50.04.0125	1N4448	50 V Si	
	DL....11	50.04.2115	MV5752	LED red D=5 mm	GI
	DL....12	50.04.2500	MV5352	LED yel D=5 mm	GI
	DL....13	50.04.2500	MV5352	LED yel D=5 mm	GI
	DL....14	50.04.2500	MV5352	LED yel D=5 mm	GI
	DL....15	50.04.2115	MV5752	LED red D=5 mm	GI
	DL....16	50.04.2115	MV5752	LED red D=5 mm	GI
	DL....17	50.04.2119	MV57124	LED red 6.35x3.81 mm	GI
	DL....18	50.04.2119	MV57124	LED red 6.35x3.81 mm	GI
	DL....19	50.04.2119	MV57124	LED red 6.35x3.81 mm	GI
	DL....21	50.04.2115	MV5752	LED red D=5 mm	GI
	DL....22	50.04.2500	MV5352	LED yel D=5 mm	GI
	DL....23	50.04.2500	MV5352	LED yel D=5 mm	GI
	DL....24	50.04.2500	MV5352	LED yel D=5 mm	GI
	DL....25	50.04.2115	MV5752	LED red D=5 mm	GI
	DL....26	50.04.2115	MV5752	LED red D=5 mm	GI
	DL....27	50.04.2119	MV57124	LED red 6.35x3.81 mm	GI
	DL....28	50.04.2119	MV57124	LED red 6.35x3.81 mm	GI
	DL....29	50.04.2119	MV57124	LED red 6.35x3.81 mm	GI
	DL....31	50.04.2115	MV5752	LED red D=5 mm	GI
	DL....32	50.04.2500	MV5352	LED yel D=5 mm	GI
	DL....33	50.04.2500	MV5352	LED yel D=5 mm	GI
	DL....34	50.04.2500	MV5352	LED yel D=5 mm	GI
	DL....35	50.04.2115	MV5752	LED red D=5 mm	GI

IND.	POS.NO.	PART NO.	VALUE	SPECIFICATIONS / EQUIVALENT	MANUF.
	DL....36	50.04.2115	MV5752	LED red D=5 mm	GI
	DL....37	50.04.2119	MV57124	LED red 6.35x3.81 mm	GI
	DL....38	50.04.2119	MV57124	LED red 6.35x3.81 mm	GI
	DL....39	50.04.2119	MV57124	LED red 6.35x3.81 mm	GI
	DL....41	50.04.2115	MV5752	LED red D=5 mm	GI
	DL....42	50.04.2500	MV5352	LED yel D=5 mm	GI
	DL....43	50.04.2500	MV5352	LED yel D=5 mm	GI
	DL....44	50.04.2500	MV5352	LED yel D=5 mm	GI
	DL....45	50.04.2115	MV5752	LED red D=5 mm	GI
	DL....46	50.04.2115	MV5752	LED red D=5 mm	GI
	DL....47	50.04.2119	MV57124	LED red 6.35x3.81 mm	GI
	DL....48	50.04.2119	MV57124	LED red 6.35x3.81 mm	GI
	DL....49	50.04.2119	MV57124	LED red 6.35x3.81 mm	GI
	IC....1	50.09.0107	RC 4559	Dual Op. Amp.	Ra
	IC....2	50.09.0107	RC 4559	Dual Op. Amp.	Ra
	IC....3	50.05.0199	LM 324	Quad Op. Amp.	NS,Mot
	IC....4	50.17.1595	74HC595	8-Bit Shift Register Tri	
	IC....5	50.17.1595	74HC595	8-Bit Shift Register Tri	
	IC....6	50.09.0107	RC 4559	Dual Op. Amp.	Ra
	IC....7	50.09.0107	RC 4559	Dual Op. Amp.	Ra
	IC....8	50.05.0199	LM 324	Quad Op. Amp.	NS,Mot
	IC....9	50.06.0596	74LS596	8-Bit Shift Register O.C.	
	IC....10	50.09.0107	RC 4559	Dual Op. Amp.	Ra
	IC....11	50.09.0107	RC 4559	Dual Op. Amp.	Ra
	IC....12	50.05.0199	LM 324	Quad Op. Amp.	NS,Mot
	IC....13	50.17.1595	74HC595	8-Bit Shift Register Tri	
	IC....14	50.17.1595	74HC595	8-Bit Shift Register Tri	
	IC....15	50.09.0107	RC 4559	Dual Op. Amp.	Ra
	IC....16	50.09.0107	RC 4559	Dual Op. Amp.	Ra
	IC....17	50.05.0199	LM 324	Quad Op. Amp.	NS,Mot
	J....1	54.01.0237	20-Pole	CIS Socket Strip	AMP
	J....2	54.01.0298	4-Pole	CIS Socket Strip	
	ME....1	1.727.360.01		VU Meter	ST
	ME....2	1.727.360.01		VU Meter	ST

IND.	POS.NO.	PART NO.	VALUE	SPECIFICATIONS / EQUIVALENT	MANUF.
	ME....3	1.727.360.01		VU Meter	ST
	ME....4	1.727.360.01		VU Meter	ST
	MP....1	43.01.0108	1 pce	ESE Warning label	
	MP....2	53.03.0221	36 pce	2-pole LED Socket	
	MP....3	1.011.235.04	8 pce	Push Button Case 4+	
	MP....4	1.011.235.24	8 pce	Conductive Rubber 4+	
	MP....5	1.011.235.29	24 pce	Bolt	
	MP....6	1.011.235.30	24 pce	Push Button 14+5	
	MP....7	1.011.235.32	12 pce	Calette RED	
	MP....8	1.011.235.33	12 pce	Calette YEL	
	MP....9	1.011.235.35	8 pce	Dummy Push Button 19+5	
	MP....10	1.727.362.93	4 pce	Wiring List	
	MP....11	1.727.945.10	1 pce	Ro. Label	
	MP....12	1.727.945.11	1 pce	VU PANEL PCB	
	P....1	54.02.0320		Plug 2.8x0.8	AMP
	P....2	54.02.0320		Plug 2.8x0.8	AMP
	P....3	54.02.0320		Plug 2.8x0.8	AMP
	P....4	54.02.0320		Plug 2.8x0.8	AMP
	P....5	54.02.0320		Plug 2.8x0.8	AMP
	P....6	54.02.0320		Plug 2.8x0.8	AMP
	P....7	54.02.0320		Plug 2.8x0.8	AMP
	P....8	54.02.0320		Plug 2.8x0.8	AMP
	Q....1	50.03.0436	BC237B	BC547B, BC550B NPN	
	Q....2	50.03.0436	BC237B	BC547B, BC550B NPN	
	Q....3	50.03.0436	BC237B	BC547B, BC550B NPN	
	Q....4	50.03.0436	BC237B	BC547B, BC550B NPN	
	Q....5	50.03.0436	BC237B	BC547B, BC550B NPN	
	Q....6	50.03.0436	BC237B	BC547B, BC550B NPN	
	Q....7	50.03.0436	BC237B	BC547B, BC550B NPN	
	Q....8	50.03.0436	BC237B	BC547B, BC550B NPN	
	Q....9	50.03.0436	BC237B	BC547B, BC550B NPN	
	Q....10	50.03.0436	BC237B	BC547B, BC550B NPN	
	Q....11	50.03.0436	BC237B	BC547B, BC550B NPN	
	Q....12	50.03.0436	BC237B	BC547B, BC550B NPN	

VU-PANEL BOARD (4CH) 1.727.945.82

IND.	POS.NO.	PART NO.	VALUE	SPECIFICATIONG / EQUIVALENT	MANUF.
	R.....1	57.11.3391	390 Ohm	1%, 0.25W, MF	
	R.....2	57.11.3391	390 Ohm	1%, 0.25W, MF	
	R.....3	57.11.3391	390 Ohm	1%, 0.25W, MF	
	R.....4	57.11.3391	390 Ohm	1%, 0.25W, MF	
	R.....5	57.11.3391	390 Ohm	1%, 0.25W, MF	
	R.....6	57.11.3272	2.7 kOhm	1%, 0.25W, MF	
	R.....7	57.11.3474	470 kOhm	1%, 0.25W, MF	
	R.....8	57.11.3682	6.8 kOhm	1%, 0.25W, MF	
	R.....9	57.11.3682	6.8 kOhm	1%, 0.25W, MF	
	R....10	57.11.3682	6.8 kOhm	1%, 0.25W, MF	
	R....11	57.11.3203	20 kOhm	1%, 0.25W, MF	
	R....12	57.11.3822	8.2 kOhm	1%, 0.25W, MF	
	R....13	57.11.3203	20 kOhm	1%, 0.25W, MF	
	R....14	58.01.8503	50 kOhm	10%, 0.5 W, PCERM	
	R....15	57.11.3153	15 kOhm	1%, 0.25W, MF	
	R....16	58.01.8503	50 kOhm	10%, 0.5 W, PCERM	
	R....17	57.11.3203	20 kOhm	1%, 0.25W, MF	
	R....18	57.11.3103	10 kOhm	1%, 0.25W, MF	
	R....19	57.11.3103	10 kOhm	1%, 0.25W, MF	
	R....20	57.11.3332	3.3 kOhm	1%, 0.25W, MF	
	R....21	57.11.3151	150 Ohm	1%, 0.25W, MF	
	R....22	57.11.3182	1.8 kOhm	1%, 0.25W, MF	
	R....23	57.11.3472	4.7 kOhm	1%, 0.25W, MF	
	R....24	57.11.3153	15 kOhm	1%, 0.25W, MF	
	R....25	57.11.3153	15 kOhm	1%, 0.25W, MF	
	R....26	57.11.3751	750 Ohm	1%, 0.25W, MF	
	R....27	57.11.3202	2.0 kOhm	1%, 0.25W, MF	
	R....28	57.11.3332	3.3 kOhm	1%, 0.25W, MF	
	R....29	57.11.3391	390 Ohm	1%, 0.25W, MF	
	R....30	57.11.3391	390 Ohm	1%, 0.25W, MF	
	R....31	57.11.3391	390 Ohm	1%, 0.25W, MF	
	R....32	57.11.3391	390 Ohm	1%, 0.25W, MF	
	R....33	57.11.3391	390 Ohm	1%, 0.25W, MF	
	R....34	57.11.3391	390 Ohm	1%, 0.25W, MF	
	R....35	57.11.3391	390 Ohm	1%, 0.25W, MF	
	R....36	57.11.3272	2.7 kOhm	1%, 0.25W, MF	
	R....37	57.11.3474	470 kOhm	1%, 0.25W, MF	

IND.	POS.NO.	PART NO.	VALUE	SPECIFICATIONS / EQUIVALENT	MANUF.
	R....38	57.11.3682	6.8 kOhm	1%, 0.25W, MF	
	R....39	57.11.3682	6.8 kOhm	1%, 0.25W, MF	
	R....40	57.11.3682	6.8 kOhm	1%, 0.25W, MF	
	R....41	57.11.3203	20 kOhm	1%, 0.25W, MF	
	R....42	57.11.3822	8.2 kOhm	1%, 0.25W, MF	
	R....43	57.11.3203	20 kOhm	1%, 0.25W, MF	
	R....44	58.01.8503	50 kOhm	10%, 0.5 W, PCERM	
	R....45	57.11.3153	15 khhm	1%, 0.25W, MF	
	R....46	58.01.8503	50 kOhm	10%, 0.5 W, PCERM	
	R....47	57.11.3203	20 kOhm	1%, 0.25W, MF	
	R....48	57.11.3103	10 kOhm	1%, 0.25W, MF	
	R....49	57.11.3103	10 kOhm	1%, 0.25W, MF	
	R....50	57.11.3332	3.3 kOhm	1%, 0.25W, MF	
	R....51	57.11.3151	150 Ohm	1%, 0.25W, MF	
	R....52	57.11.3182	1.8 kOhm	1%, 0.25W, MF	
	R....53	57.11.3472	4.7 kOhm	1%, 0.25W, MF	
	R....54	57.11.3153	15 kOhm	1%, 0.25W, MF	
	R....55	57.11.3153	15 kOhm	1%, 0.25W, MF	
	R....56	57.11.3751	750 Ohm	1%, 0.25W, MF	
	R....57	57.11.3202	2.0 kOhm	1%, 0.25W, MF	
	R....58	57.11.3332	3.3 kOhm	1%, 0.25W, MF	
	R....59	57.11.3391	390 Ohm	1%, 0.25W, MF	
	R....60	57.11.3391	390 Ohm	1%, 0.25W, MF	
	R....61	57.11.3391	390 Ohm	1%, 0.25W, MF	
	R....62	57.11.3391	390 Ohm	1%, 0.25W, MF	
	R....63	57.11.3391	390 Ohm	1%, 0.25W, MF	
	R....64	57.11.3391	390 Ohm	1%, 0.25W, MF	
	R....65	57.11.3391	390 Ohm	1%, 0.25W, MF	
	R....66	57.11.3272	2.7 kOhm	1%, 0.25W, MF	
	R....67	57.11.3474	470 kOhm	1%, 0.25W, MF	
	R....68	57.11.3682	6.8 kOhm	1%, 0.25W, MF	
	R....69	57.11.3682	6.8 kOhm	1%, 0.25W, MF	
	R....70	57.11.3682	6.8 kOhm	1%, 0.25W, MF	
	R....71	57.11.3203	20 kOhm	1%, 0.25W, MF	
	R....72	57.11.3822	8.2 kOhm	1%, 0.25W, MF	
	R....73	57.11.3203	20 kOhm	1%, 0.25W, MF	
	R....74	58.01.8503	50 kOhm	10%, 0.5 W, PCERM	

IND.	POS.NO.	PART NO.	VALUE	SPECIFICATIONS / EQUIVALENT	MANUF.
	R....75	57.11.3153	15 kOhm	1%, 0.25W, MF	
	R....76	58.01.8503	50 kOhm	10%, 0.5 W, PCERM	
	R....77	57.11.3203	20 kOhm	1%, 0.25W, MF	
	R....78	57.11.3103	10 kOhm	1%, 0.25W, MF	
	R....79	57.11.3103	10 kOhm	1%, 0.25W, MF	
	R....80	57.11.3332	3.3 kOhm	1%, 0.25W, MF	
	R....81	57.11.3151	150 Ohm	1%, 0.25W, MF	
	R....82	57.11.3182	1.8 kOhm	1%, 0.25W, MF	
	R....83	57.11.3472	4.7 kOhm	1%, 0.25W, MF	
	R....84	57.11.3153	15 kOhm	1%, 0.25W, MF	
	R....85	57.11.3153	15 kOhm	1%, 0.25W, MF	
	R....86	57.11.3751	750 Ohm	1%, 0.25W, MF	
	R....87	57.11.3202	2.0 kOhm	1%, 0.25W, MF	
	R....88	57.11.3332	3.3 kOhm	1%, 0.25W, MF	
	R....89	57.11.3391	390 Ohm	1%, 0.25W, MF	
	R....90	57.11.3391	390 Ohm	1%, 0.25W, MF	
	R....91	57.11.3391	390 Ohm	1%, 0.25W, MF	
	R....92	57.11.3391	390 Ohm	1%, 0.25W, MF	
	R....93	57.11.3391	390 Ohm	1%, 0.25W, MF	
	R....94	57.11.3391	390 Ohm	1%, 0.25W, MF	
	R....95	57.11.3391	390 Ohm	1%, 0.25W, MF	
	R....96	57.11.3272	2.7 kOhm	1%, 0.25W, MF	
	R....97	57.11.3474	470 kOhm	1%, 0.25W, MF	
	R....98	57.11.3682	6.8 kOhm	1%, 0.25W, MF	
	R....99	57.11.3682	6.8 kOhm	1%, 0.25W, MF	
	R...100	57.11.3682	6.8 kOhm	1%, 0.25W, MF	
	R...101	57.11.3203	20 kOhm	1%, 0.25W, MF	
	R...102	57.11.3822	8.2 kOhm	1%, 0.25W, MF	
	R...103	57.11.3203	20 kOhm	1%, 0.25W, MF	
	R...104	58.01.8503	50 kOhm	10%, 0.5 W, PCERM	
	R...105	57.11.3153	15 kOhm	1%, 0.25W, MF	
	R...106	58.01.8503	50 kOhm	10%, 0.5 W, PCERM	
	R...107	57.11.3203	20 kOhm	1%, 0.25W, MF	
	R...108	57.11.3103	10 kOhm	1%, 0.25W, MF	
	R...109	57.11.3103	10 kOhm	1%, 0.25W, MF	
	R...110	57.11.3332	3.3 kOhm	1%, 0.25W, MF	
	R...111	57.11.3151	150 Ohm	1%, 0.25W, MF	

IND.	POS.NO.	PART NO.	VALUE	SPECIFICATIONS / EQUIVALENT	MANUF.
	R...112	57.11.3182	1.8 kOhm	1%, 0.25W, MF	
	R...113	57.11.3472	4.7 kOhm	1%, 0.25W, MF	
	R...114	57.11.3153	15 kOhm	1%, 0.25W, MF	
	R...115	57.11.3153	15 kOhm	1%, 0.25W, MF	
	R...116	57.11.3751	750 Ohm	1%, 0.25W, MF	
	R...117	57.11.3202	2.0 kOhm	1%, 0.25W, MF	
	R...118	57.11.3332	3.3 kOhm	1%, 0.25W, MF	
	R...119	57.11.3391	390 Ohm	1%, 0.25W, MF	
	R...120	57.11.3391	390 Ohm	1%, 0.25W, MF	
	R...121	57.11.3102	1 kOhm	1%, 0.25W, MF	
	R...122	57.11.3102	1 kOhm	1%, 0.25W, MF	
	R...123	57.11.3102	1 kOhm	1%, 0.25W, MF	
	XB....1	53.04.0107		Lamp holder	
	XB....2	53.04.0107		Lamp holder	
	XB....3	53.04.0107		Lamp holder	
	XB....4	53.04.0107		Lamp holder	
	XB....5	53.04.0107		Lamp holder	
	XB....6	53.04.0107		Lamp holder	
	XB....7	53.04.0107		Lamp holder	
	XB....8	53.04.0107		Lamp holder	
	XIC...1	53.03.0166	8-Pole	IC Socket	
	XIC...2	53.03.0166	8-Pole	IC Socket	
	XIC...3	53.03.0167	14-Pole	IC Socket	
	XIC...4	53.03.0168	16-Pole	IC Socket	
	XIC...5	53.03.0168	16-Pole	IC Socket	
	XIC...6	53.03.0166	8-Pole	IC Socket	
	XIC...7	53.03.0166	8-Pole	IC Socket	
	XIC...8	53.03.0167	14-Pole	IC Socket	
	XIC...9	53.03.0168	16-Pole	IC Socket	
	XIC..10	53.03.0166	8-Pole	IC Socket	
	XIC..11	53.03.0166	8-Pole	IC Socket	
	XIC..12	53.03.0167	14-Pole	IC Socket	
	XIC..13	53.03.0168	16-Pole	IC Socket	
	XIC..14	53.03.0168	16-Pole	IC Socket	
	XIC..15	53.03.0166	8-Pole	IC Socket	

IND.	POS.NO.	PART NO.	VALUE	SPECIFICATIONS / EQUIVALENT	MANUF.
	XIC..16	53.03.0166	8-Pole	IC Socket	
	XIC..17	53.03.0167	14-Pole	IC Socket	

CER=Ceramic, EL=Electrolytic, PETP=Polyester, SI=Silicon,
MF=Metal Film, PCerm=Pot. Cermet,
MANUFACTURER: AMP, GI=General Instrument, ITT, Mot=Motorola,
NS=National Semiconductor, RA=Raytheon, ST=STUDER

ORIG 91/08/12

INTER CONNECTION BOARD (4CH) 1.727.946.00

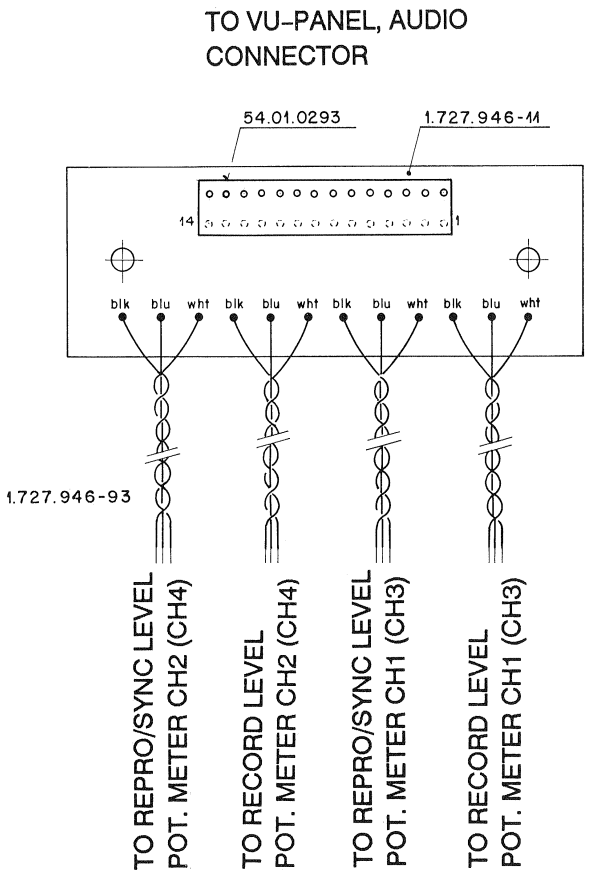

IND.	POS.NO.	PART NO.	VALUE	SPECIFICATIONS / EQUIVALENT	MANUF.
	J.....1	54.01.0293	14-Pole	CIS Socket Strip	
	MP....1	1.727.946.11	1 pce	Interconnection Board PCB	
	MP....2	1.727.946.10	1 pce	Text Etikette	
	MP....3	1.727.946.93	1 pce	Wiring List	

ORIG 88/09/12

S T U D E R (00) 88/09/12 DS INTERCONNECTION BOARD PL 1.727.946.00 PAGE 1

WIRING DIAGRAM STEREO MONITOR PANEL 1.727.096.00

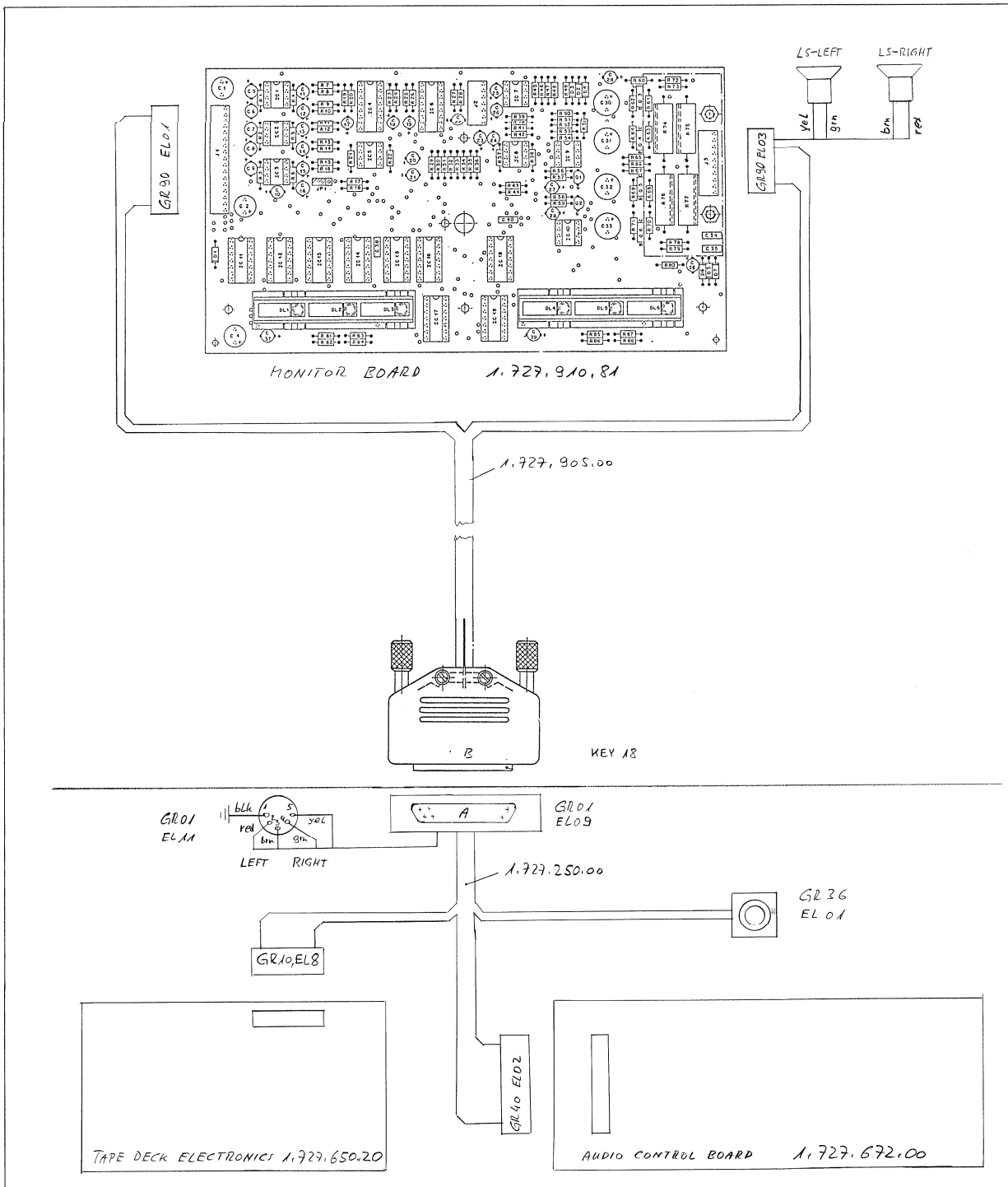

0 29.10.91 WH				
	A807			PAGE 1 OF 2
STUDER	WIRING DIAGRAM, MONITOR PANEL			1.727.096.00

WIRING DIAGRAM STEREO MONITOR PANEL 1.727.096.00

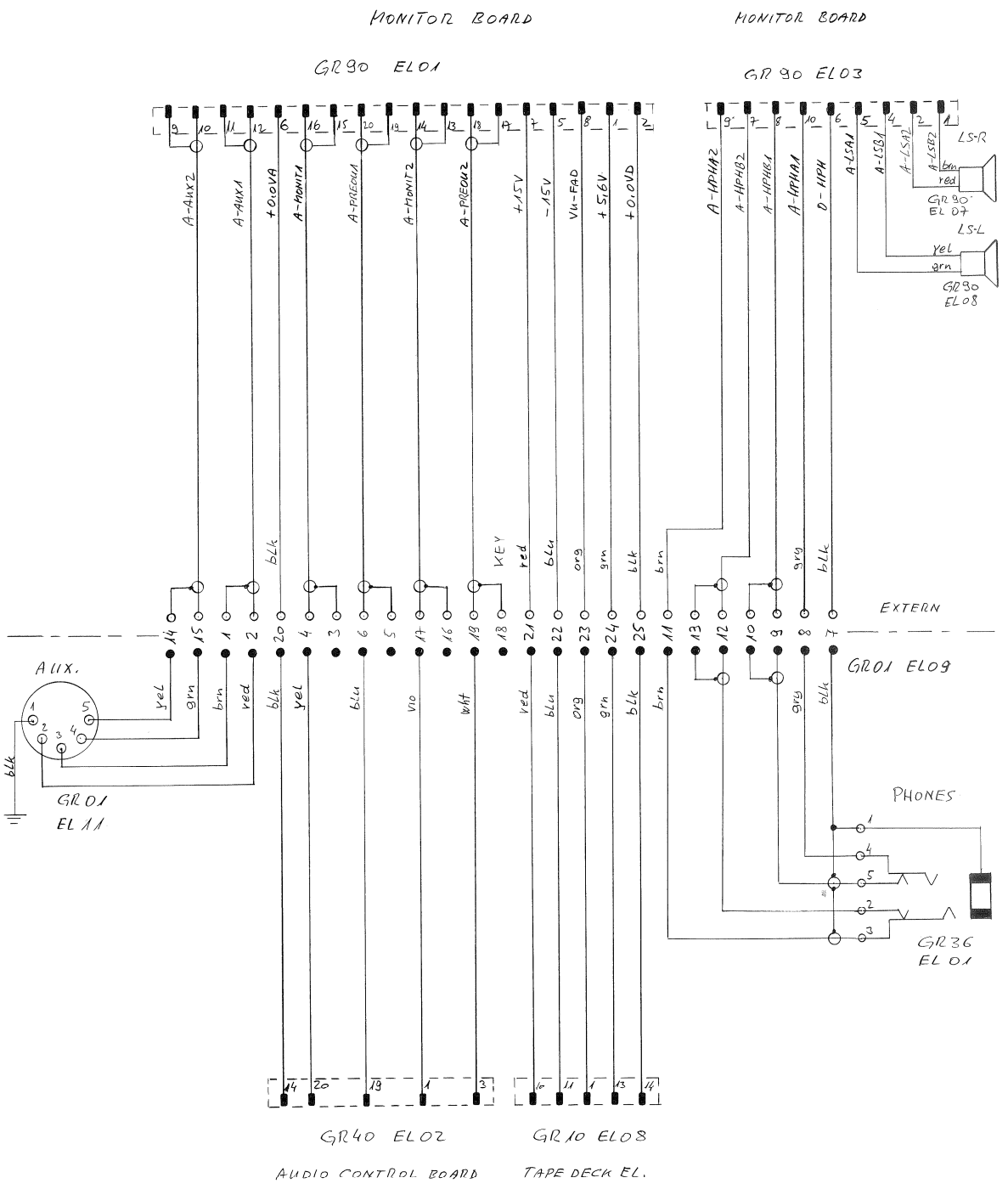

0 29.10.91 WHL.				
	A 807			PAGE 2 OF 2
STUDER	WIRING DIAGRAM, MONITOR PANEL			1.727.096.00

MONITOR BOARD 1.727.910.81

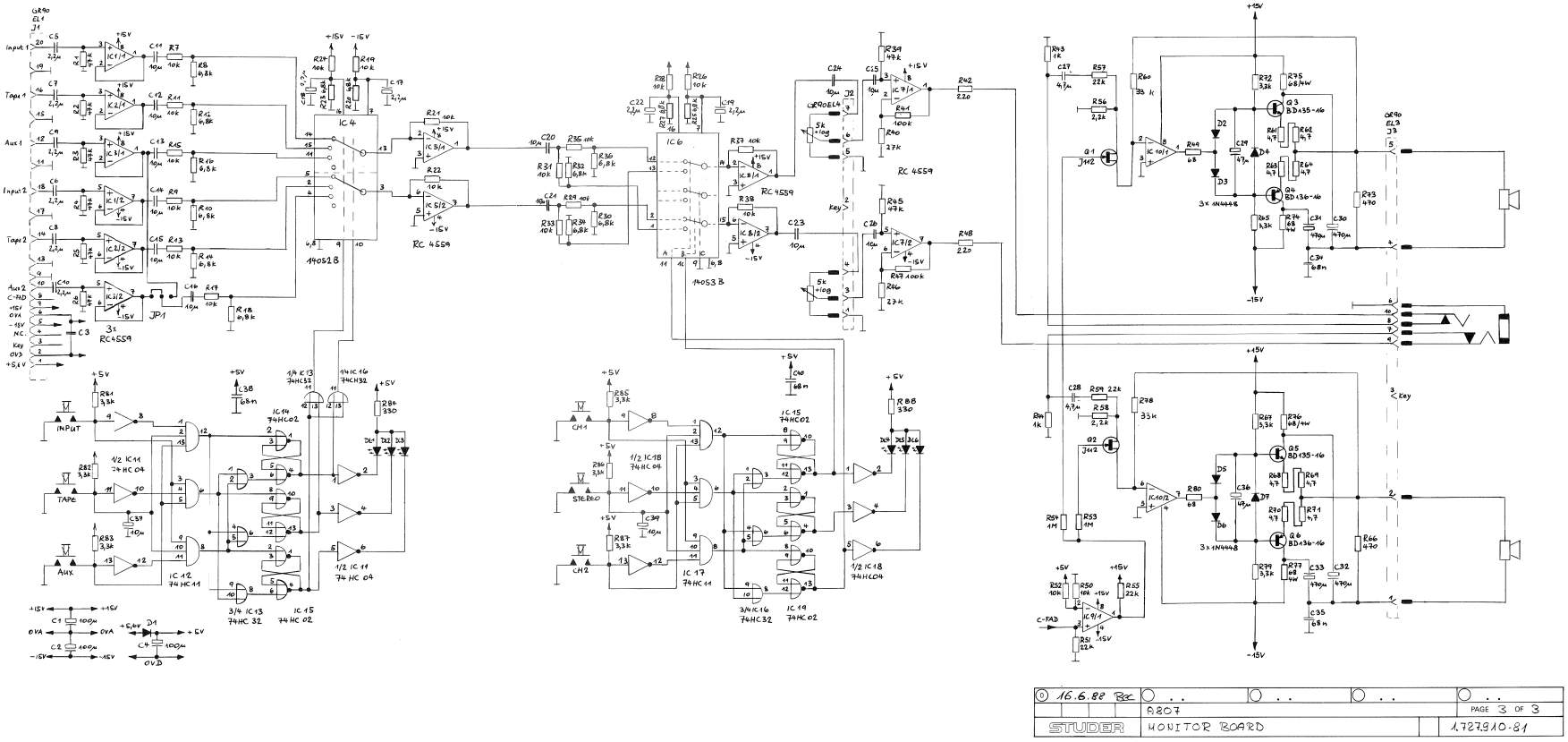

16.6.88 Rx	. .	. .	. .	. .
	A807			PAGE 3 OF 3
STUDER	MONITOR BOARD			1.727.910-81

MONITOR BOARD 1.727.910.81

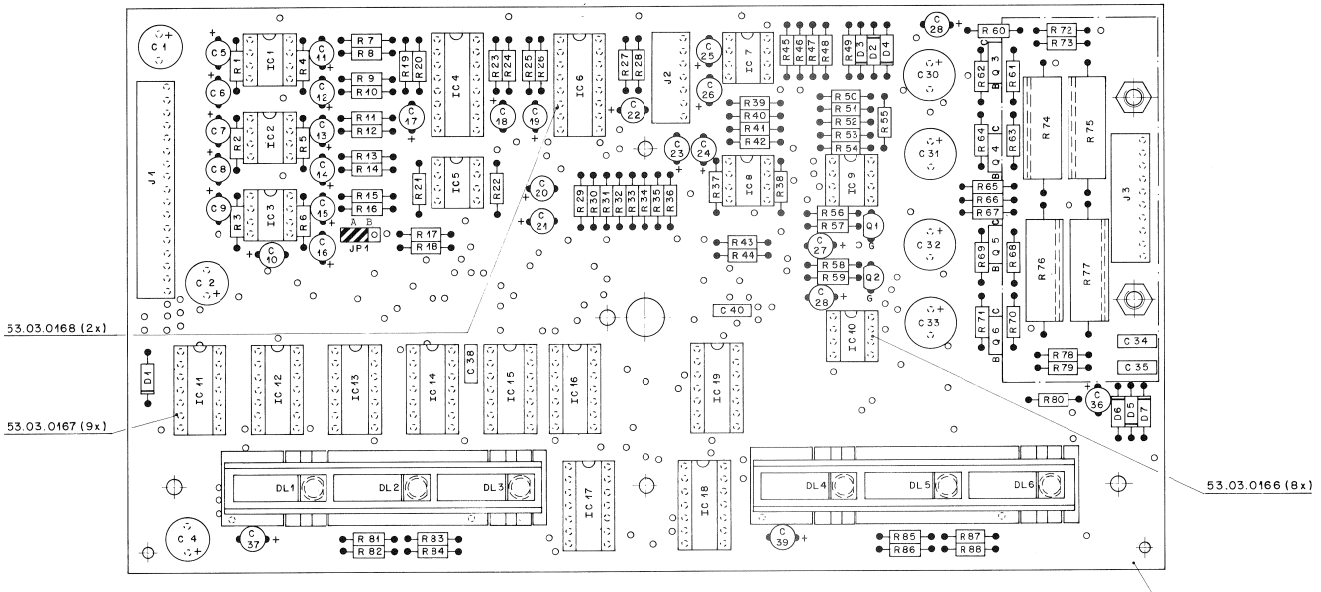

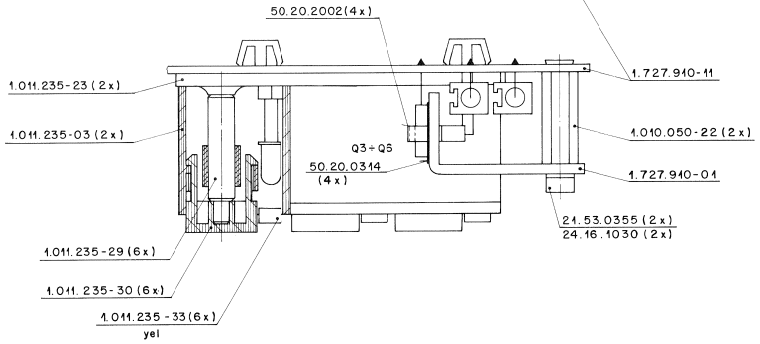

FACTORY STANDARD SETTING

JP1: A = AUX STEREO
B = AUX1 ONLY

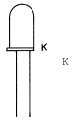

K = CATHODE

IND.	POS.NO.	PART NO.	VALUE	SPECIFICATIONS / EQUIVALENT	MANUF.
C	1	59.22.5101	100 uF	-20% 25 V EL	
C	2	59.22.5101	100 uF	-20% 25 V EL	
C	3		not used		
C	4	59.22.5101	100 uF	-20% 25 V EL	
C	5	59.22.8229	2.2 uF	-20% 50 V EL	
C	6	59.22.8229	2.2 uF	-20% 50 V EL	
C	7	59.22.8229	2.2 uF	-20% 50 V EL	
C	8	59.22.8229	2.2 uF	-20% 50 V EL	
C	9	59.22.8229	2.2 uF	-20% 50 V EL	
C	10	59.22.8229	2.2 uF	-20% 50 V EL	
C	11	59.22.6100	10 uF	-20% 35 V EL	
C	12	59.22.6100	10 uF	-20% 35 V EL	
C	13	59.22.6100	10 uF	-20% 35 V EL	
C	14	59.22.6100	10 uF	-20% 35 V EL	
C	15	59.22.6100	10 uF	-20% 35 V EL	
C	16	59.22.6100	10 uF	-20% 35 V EL	
C	17	59.22.8229	2.2 uF	-20% 50 V EL	
C	18	59.22.8229	2.2 uF	-20% 50 V EL	
C	19	59.22.8229	2.2 uF	-20% 50 V EL	
C	20	59.22.6100	10 uF	-20% 35 V EL	
C	21	59.22.6100	10 uF	-20% 35 V EL	
C	22	59.22.8229	2.2 uF	-20% 50 V EL	
C	23	59.22.6100	10 uF	-20% 35 V EL	
C	24	59.22.6100	10 uF	-20% 35 V EL	
C	25	59.22.6100	10 uF	-20% 35 V EL	
C	26	59.22.6100	10 uF	-20% 35 V EL	
C	27	59.22.8479	4.7 uF	-20% 50 V EL	
C	28	59.22.8479	4.7 uF	-20% 50 V EL	
C	29	59.22.3470	47 uF	-20% 10 V EL	
C	30	59.22.4471	470 uF	-20% 16 V EL	
C	31	59.22.4471	470 uF	-20% 16 V EL	
C	32	59.22.4471	470 uF	-20% 16 V EL	
C	33	59.22.4471	470 uF	-20% 16 V EL	
C	34	59.06.0683	68 nF	10% 63 V PE	
C	35	59.06.0583	68 nF	10% 63 V PE	
C	36	59.22.3470	47 uF	-20% 10 V EL	
C	37	59.22.6100	10 uF	-20% 35 V EL	

IND.	POS.NO.	PART NO.	VALUE	SPECIFICATIONS / EQUIVALENT	MANUF.
C	38	59.06.0683	68 nF	10% 63 V PE	
C	39	59.22.6100	10 uF	-20% 35 V EL	
C	40	59.06.0683	68 nF	10% 63 V PE	
D	1	50.04.0512	1N5818	30 V	
D	2	50.04.0125	1N4448	75 V	
D	3	50.04.0125	1N4448	75 V	
D	4	50.04.0125	1N4448	75 V	
D	5	50.04.0125	1N4448	75 V	
D	6	50.04.0125	1N4448	75 V	
D	7	50.04.0125	1N4448	75 V	
DL	1	50.04.2500	MV5352	LED yel D=5mm	GI
DL	2	50.04.2500	MV5352	LED yel D=5mm	GI
DL	3	50.04.2500	MV5352	LED yel D=5mm	GI
DL	4	50.04.2500	MV5352	LED yel D=5mm	GI
DL	5	50.04.2500	MV5352	LED yel D=5mm	GI
DL	6	50.04.2500	MV5352	LED yel D=5mm	GI
IC	1	50.09.0107	RC 4559	DUAL OP.AMP.	
IC	2	50.09.0107	RC 4559	DUAL OP.AMP.	
IC	3	50.09.0107	RC 4559	DUAL OP.AMP.	
IC	4	50.07.0024	MC14052	DUAL 4-CH AMUX	
IC	5	50.09.0107	RC 4559	DUAL OP.AMP.	
IC	6	50.07.0015	MC14053	TRIPLE 2-CH AMUX	
IC	7	50.09.0107	RC 4559	DUAL OP.AMP.	
IC	8	50.09.0107	RC 4559	DUAL OP.AMP.	
IC	9	50.09.0107	RC 4559	DUAL OP.AMP.	
IC	10	50.09.0107	RC 4559	DUAL OP.AMP.	
IC	11	50.17.1004	74HC04	HEX INVERTER	
IC	12	50.17.1011	74HC11	TRIP 3-INPUT AND GATE	
IC	13	50.17.1032	74HC32	QUAD 2-INPUT OR GATE	
IC	14	50.17.1002	74HC02	QUAD 2-INPUT NOR GATE	
IC	15	50.17.1002	74HC02	QUAD 2-INPUT NOR GATE	
IC	16	50.17.1032	74HC32	QUAD 2-INPUT OR GATE	
IC	17	50.17.1011	74HC11	TRIP 3-INPUT AND GATE	
IC	18	50.17.1004	74HC04	HEX INVERTER	

IND.	POS.NO.	PART NO.	VALUE	SPECIFICATIONS / EQUIVALENT	MANUF.
IC	19	50.17.1002	74HC02	QUAD 2-INPUT NOR GATE	
J	1	54.01.0237	20-POLE	C15 Socket Strip	AMP
J	2	54.01.0263	7-POLE	C15 Socket Strip	AMP
J	3	54.01.0242	10-POLE	C15 Socket Strip	AMP
JP	1	54.01.0021		Bridge	
MP	1	1.727.910.11	1 pcs	Monitor PCB	
MP	2	54.01.0020	3 pcs	Contact Pin	
MP	3	1.727.910.01	1 pcs	Kuehlblech	
MP	4	1.011.235.03	2 pcs	Tastengehaeuse 3er	
MP	5	1.011.235.23	2 pcs	Schaltmatte 3er	
MP	6	1.011.235.29	6 pcs	Bolzen	
MP	7	1.011.235.30	6 pcs	Drucktaste	
MP	8	1.011.235.33	6 pcs	Kalotte gelb	
MP	9	1.727.910.10	0 pcs	No.Schild	
MP	10	53.03.0221	6 pcs	LED Socket	
MP	11	1.010.050.22	2 pcs	Distanzbolzen 18mm	
MP	12	21.53.0355	2 pcs	Schrauben M3x8mm	
MP	13	24.16.1030	2 pcs	Sicherungsscheiben	
MP	14	50.20.2002	4 pcs	Transistorenclips	
MP	15	50.20.0314	4 pcs	Isolierscheiben	
Q	1	50.03.0350	MPF4392	J112 FET	
Q	2	50.03.0350	MPF4392	J112 FET	
Q	3	50.03.0495	BD135-16	NPN	
Q	4	50.03.0510	BD136-16	PNP	
Q	5	50.03.0495	BD135-16	NPN	
Q	6	50.03.0510	BD136-16	PNP	
R	1	57.11.3473	47 kOhm	2%, 0.25W, MF	
R	2	57.11.3473	47 kOhm	2%, 0.25W, MF	
R	3	57.11.3473	47 kOhm	2%, 0.25W, MF	
R	4	57.11.3473	47 kOhm	2%, 0.25W, MF	
R	5	57.11.3473	47 kOhm	2%, 0.25W, MF	
R	6	57.11.3473	47 kOhm	2%, 0.25W, MF	

MONITOR BOARD 1.727.910.81

IND.	POS.NO.	PART NO.	VALUE	SPECIFICATIONS / EQUIVALENT	MANUF.
	R....7	57.11.3103	10 kOhm	2%, 0.25W, MF	
	R....8	57.11.3682	6.8 kOhm	2%, 0.25W, MF	
	R....9	57.11.3103	10 kOhm	2%, 0.25W, MF	
	R....10	57.11.3682	6.8 kOhm	2%, 0.25W, MF	
	R....11	57.11.3103	10 kOhm	2%, 0.25W, MF	
	R....12	57.11.3682	6.8 kOhm	2%, 0.25W, MF	
	R....13	57.11.3103	10 kOhm	2%, 0.25W, MF	
	R....14	57.11.3682	6.8 kOhm	2%, 0.25W, MF	
	R....15	57.11.3103	10 kOhm	2%, 0.25W, MF	
	R....16	57.11.3682	6.8 kOhm	2%, 0.25W, MF	
	R....17	57.11.3103	10 kOhm	2%, 0.25W, MF	
	R....18	57.11.3682	6.8 kOhm	2%, 0.25W, MF	
	R....19	57.11.3103	10 kOhm	2%, 0.25W, MF	
	R....20	57.11.3682	6.8 kOhm	2%, 0.25W, MF	
	R....21	57.11.3103	10 kOhm	2%, 0.25W, MF	
	R....22	57.11.3103	10 kOhm	2%, 0.25W, MF	
	R....23	57.11.3682	6.8 kOhm	2%, 0.25W, MF	
	R....24	57.11.3103	10 kOhm	2%, 0.25W, MF	
	R....25	57.11.3682	6.8 kOhm	2%, 0.25W, MF	
	R....26	57.11.3103	10 kOhm	2%, 0.25W, MF	
	R....27	57.11.3682	6.8 kOhm	2%, 0.25W, MF	
	R....28	57.11.3103	10 kOhm	2%, 0.25W, MF	
	R....29	57.11.3103	10 kOhm	2%, 0.25W, MF	
	R....30	57.11.3682	6.8 kOhm	2%, 0.25W, MF	
	R....31	57.11.3103	10 kOhm	2%, 0.25W, MF	
	R....32	57.11.3682	6.8 kOhm	2%, 0.25W, MF	
	R....33	57.11.3103	10 kOhm	2%, 0.25W, MF	
	R....34	57.11.3682	6.8 kOhm	2%, 0.25W, MF	
	R....35	57.11.3103	10 kOhm	2%, 0.25W, MF	
	R....36	57.11.3682	6.8 kOhm	2%, 0.25W, MF	
	R....37	57.11.3103	10 kOhm	2%, 0.25W, MF	
	R....38	57.11.3103	10 kOhm	2%, 0.25W, MF	
	R....39	57.11.3473	47 kOhm	2%, 0.25W, MF	
	R....40	57.11.3273	27 kOhm	2%, 0.25W, MF	
	R....41	57.11.3104	100 kOhm	2%, 0.25W, MF	
	R....42	57.11.3221	220 Ohm	2%, 0.25W, MF	
	R....43	57.11.3102	1 kOhm	2%, 0.25W, MF	

IND.	POS.NO.	PART NO.	VALUE	SPECIFICATIONS / EQUIVALENT	MANUF.
	R....44	57.11.3102	1 kOhm	2%, 0.25W, MF	
	R....45	57.11.3473	47 kOhm	2%, 0.25W, MF	
	R....46	57.11.3273	27 kOhm	2%, 0.25W, MF	
	R....47	57.11.3104	100 kOhm	2%, 0.25W, MF	
	R....48	57.11.3221	220 Ohm	2%, 0.25W, MF	
	R....49	57.11.3680	68 Ohm	2%, 0.25W, MF	
	R....50	57.11.3103	10 kOhm	2%, 0.25W, MF	
	R....51	57.11.3223	22 kOhm	2%, 0.25W, MF	
	R....52	57.11.3103	10 kOhm	2%, 0.25W, MF	
	R....53	57.11.3105	1 MOhm	2%, 0.25W, MF	
	R....54	57.11.3105	1 MOhm	2%, 0.25W, MF	
	R....55	57.11.3223	22 kOhm	2%, 0.25W, MF	
	R....56	57.11.3222	2.2 kOhm	2%, 0.25W, MF	
	R....57	57.11.3223	22 kOhm	2%, 0.25W, MF	
	R....58	57.11.3222	2.2 kOhm	2%, 0.25W, MF	
	R....59	57.11.3223	22 kOhm	2%, 0.25W, MF	
	R....60	57.11.3333	33 kOhm	2%, 0.25W, MF	
	R....61	57.11.3479	4.7 Ohm	2%, 0.25W, MF	
	R....62	57.11.3479	4.7 Ohm	2%, 0.25W, MF	
	R....63	57.11.3479	4.7 Ohm	2%, 0.25W, MF	
	R....64	57.11.3479	4.7 Ohm	2%, 0.25W, MF	
	R....65	57.11.3332	3.3 kOhm	2%, 0.25W, MF	
	R....66	57.11.3471	470 Ohm	2%, 0.25W, MF	
	R....67	57.11.3332	3.3 kOhm	2%, 0.25W, MF	
	R....68	57.11.3479	4.7 Ohm	2%, 0.25W, MF	
	R....69	57.11.3479	4.7 Ohm	2%, 0.25W, MF	
	R....70	57.11.3479	4.7 Ohm	2%, 0.25W, MF	
	R....71	57.11.3479	4.7 Ohm	2%, 0.25W, MF	
	R....72	57.11.3332	3.3 kOhm	2%, 0.25W, MF	
	R....73	57.11.3471	470 Ohm	2%, 0.25W, MF	
	R....74	57.56.5680	68 Ohm	2%, 4 W, DR	
	R....75	57.56.5680	68 Ohm	2%, 4 W, DR	
	R....76	57.56.5680	68 Ohm	2%, 4 W, DR	
	R....77	57.56.5680	68 Ohm	2%, 4 W, DR	
	R....78	57.11.3333	33 kOhm	2%, 0.25W, MF	
	R....79	57.11.3332	3.3 kOhm	2%, 0.25W, MF	
	R....80	57.11.3680	68 Ohm	2%, 0.25W, MF	

IND.	POS.NO.	PART NO.	VALUE	SPECIFICATIONS / EQUIVALENT	MANUF.
	R....81	57.11.3332	3.3 kOhm	2%, 0.25W, MF	
	R....82	57.11.3332	3.3 kOhm	2%, 0.25W, MF	
	R....83	57.11.3332	3.3 kOhm	2%, 0.25W, MF	
	R....84	57.11.3331	330 Ohm	2%, 0.25W, MF	
	R....85	57.11.3332	3.3 kOhm	2%, 0.25W, MF	
	R....86	57.11.3332	3.3 kOhm	2%, 0.25W, MF	
	R....87	57.11.3332	3.3 kOhm	2%, 0.25W, MF	
	R....88	57.11.3331	330 Ohm	2%, 0.25W, MF	
	XIC...1	54.03.0166	8 Pole	IC Socket	
	XIC...2	54.03.0166	8 Pole	IC Socket	
	XIC...3	54.03.0166	8 Pole	IC Socket	
	XIC...4	54.03.0168	16 Pole	IC Socket	
	XIC...5	54.03.0166	8 Pole	IC Socket	
	XIC...6	54.03.0168	16 Pole	IC Socket	
	XIC...7	54.03.0166	8 Pole	IC Socket	
	XIC...8	54.03.0166	8 Pole	IC Socket	
	XIC...9	54.03.0166	8 Pole	IC Socket	
	XIC..10	54.03.0166	8 Pole	IC Socket	
	XIC..11	54.03.0167	14 Pole	IC Socket	
	XIC..12	54.03.0167	14 Pole	IC Socket	
	XIC..13	54.03.0167	14 Pole	IC Socket	
	XIC..14	54.03.0167	14 Pole	IC Socket	
	XIC..15	54.03.0167	14 Pole	IC Socket	
	XIC..16	54.03.0167	14 Pole	IC Socket	
	XIC..17	54.03.0167	14 Pole	IC Socket	
	XIC..18	54.03.0167	14 Pole	IC Socket	
	XIC..19	54.03.0167	14 Pole	IC Socket	

EL=Electrolytic, PP=Polypropylen, SI=Silicon , MF=Metal Film
MANUFACTURER:

ORIG 88/03/28

MONITOR VU BOARD 1.727.965.00

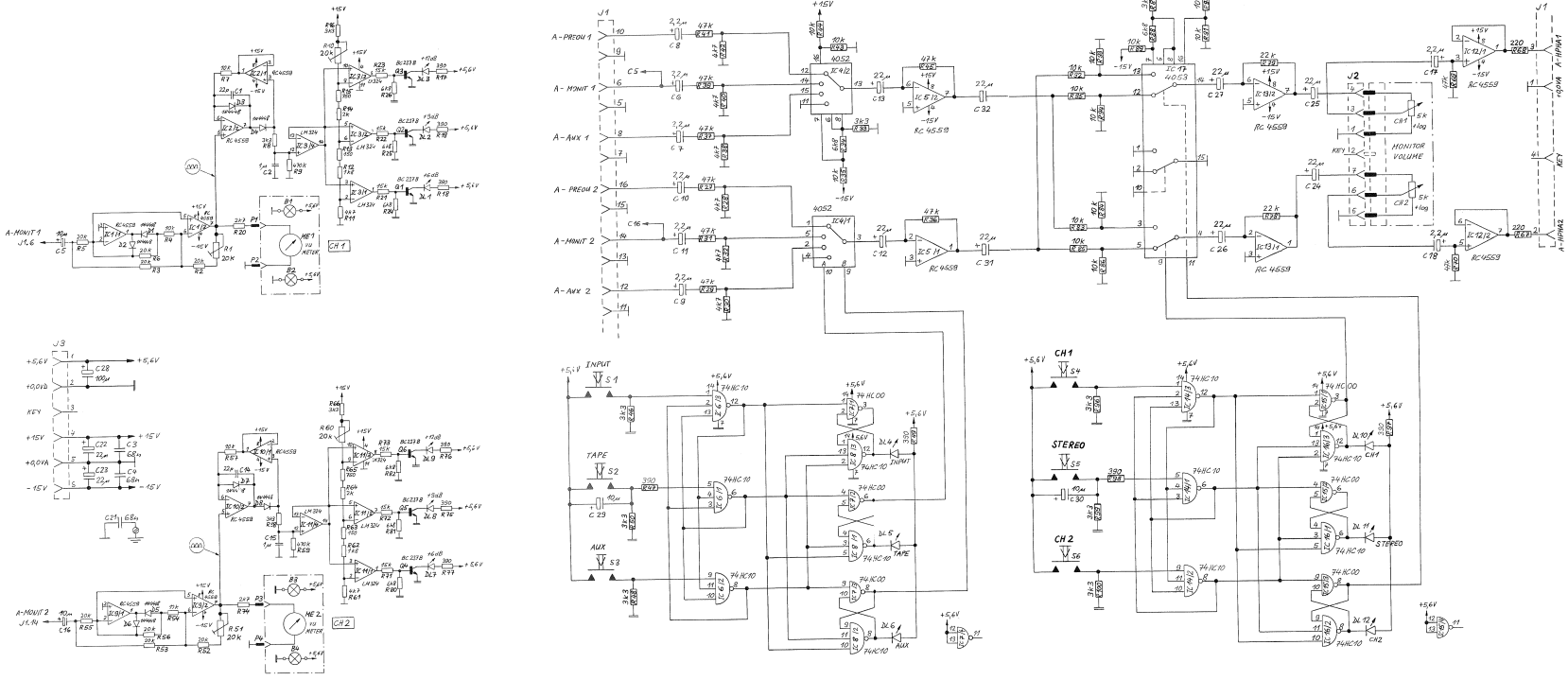

0 2.12.87 GP	. .	. .	. .	. .
	A 807 GR 96			PAGE 3 OF 3
STUDER	MONITOR VU BOARD		SC	1.727.965.00

MONITOR VU BOARD 1.727.965.00

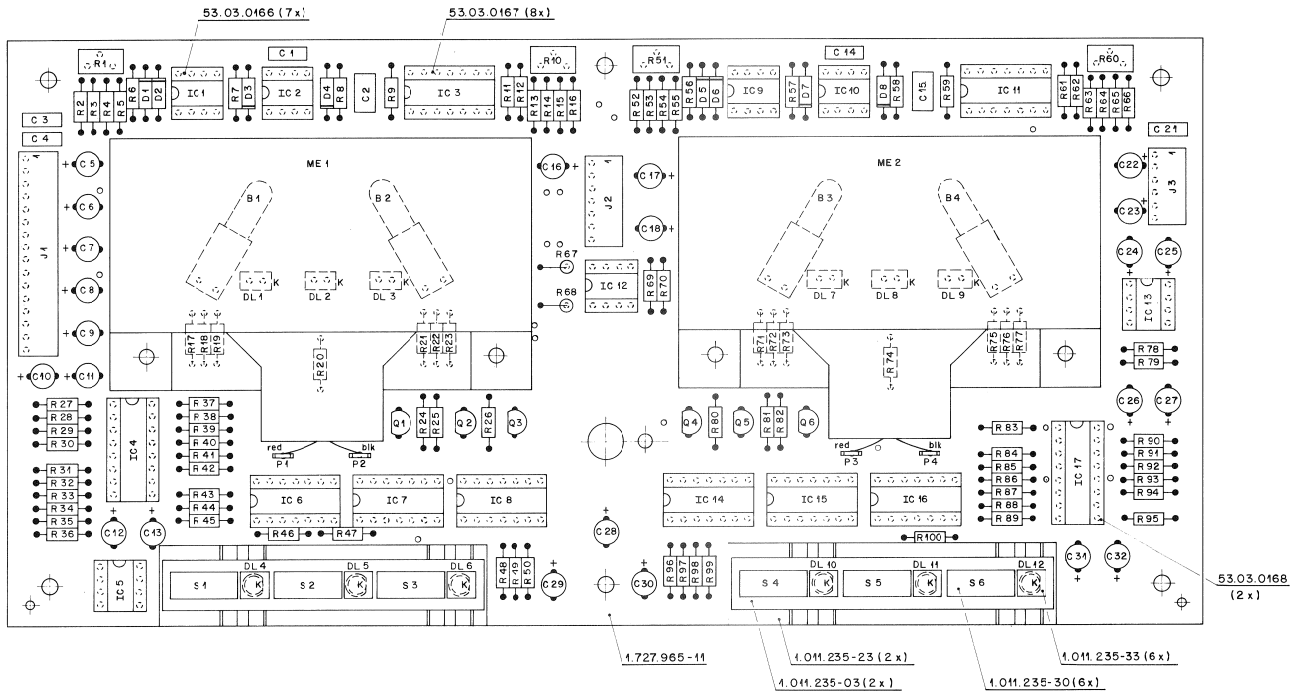

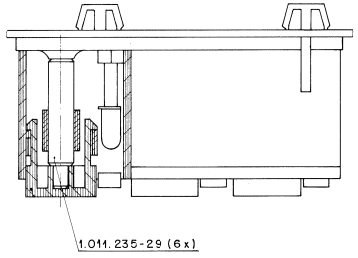

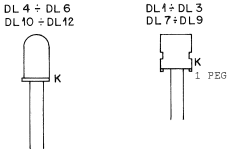

K = CATHODE

IND.	POS.NO.	PART NO.	VALUE	SPECIFICATIONS / EQUIVALENT	MANUF.
	B.....1	51.02.0144	6 V	0.03 A Lamp	
	B.....2	51.02.0144	6 V	0.03 A Lamp	
	B.....3	51.02.0144	6 V	0.03 A Lamp	
	B.....4	51.02.0144	6 V	0.03 A Lamp	
	C.....1	59.34.2220	22 pF	10% 50 V CER	
	C.....2	59.06.0105	1 uF	10% 50 V PETP	
	C.....3	59.06.0683	68 nF	10% 50 V PETP	
	C.....4	59.06.0683	68 nF	10% 50 V PETP	
	C.....5	59.22.6100	10 uF	-20% 25 V EL	
	C.....6	59.22.8229	2.2 uF	-20% 25 V EL	
	C.....7	59.22.8229	2.2 uF	-20% 25 V EL	
	C.....8	59.22.8229	2.2 uF	-20% 25 V EL	
	C.....9	59.22.8229	2.2 uF	-20% 25 V EL	
	C....10	59.22.8229	2.2 uF	-20% 25 V EL	
	C....11	59.22.8229	2.2 uF	-20% 25 V EL	
	C....12	59.22.5220	22 uF	-20% 25 V EL	
	C....13	59.22.5220	22 uF	-20% 25 V EL	
	C....14	59.34.2220	22 pF	10% 50 V CER	
	C....15	59.06.0105	1 uF	10% 50 V PETP	
	C....16	59.22.6100	10 uF	-20% 25 V EL	
	C....17	59.22.8229	2.2 uF	-20% 25 V EL	
	C....18	59.22.8229	2.2 uF	-20% 25 V EL	
	C....21	59.06.0683	68 nF	10% 50 V PETP	
	C....22	59.22.5220	22 uF	-20% 25 V EL	
	C....23	59.22.5220	22 uF	-20% 25 V EL	
	C....24	59.22.5220	22 uF	-20% 25 V EL	
	C....25	59.22.5220	22 uF	-20% 25 V EL	
	C....26	59.22.5220	22 uF	-20% 25 V EL	
	C....27	59.22.5220	22 uF	-20% 25 V EL	
	C....28	59.22.3101	100 uF	-20% 10 V EL	
	C....29	59.22.6100	10 uF	-20% 25 V EL	
	C....30	59.22.6100	10 uF	-20% 25 V EL	
	C....31	59.22.5220	22 uF	-20% 25 V EL	
	C....32	59.22.5220	22 uF	-20% 25 V EL	
	D.....1	50.04.0125	1N4448	50 V SI	

IND.	POS.NO.	PART NO.	VALUE	SPECIFICATIONS / EQUIVALENT	MANUF.
	D.....2	50.04.0125	1N4448	50 V SI	
	D.....3	50.04.0125	1N4448	50 V SI	
	D.....4	50.04.0125	1N4448	50 V SI	
	D.....5	50.04.0125	1N4448	50 V SI	
	D.....6	50.04.0125	1N4448	50 V SI	
	D.....7	50.04.0125	1N4448	50 V SI	
	D.....8	50.04.0125	1N4448	50 V SI	
	DL....1	50.04.2119	MV57124	LED red 6.35*3.81	GI
	DL....2	50.04.2119	MV57124	LED red 6.35*3.81	GI
	DL....3	50.04.2119	MV57124	LED red 6.35*3.81	GI
	DL....4	50.04.2500	MV5352	LED yel D=5 mm	GI
	DL....5	50.04.2500	MV5352	LED yel D=5 mm	GI
	DL....6	50.04.2500	MV5352	LED yel D=5 mm	GI
	DL....7	50.04.2119	MV57124	LED red 6.35*3.81	GI
	DL....8	50.04.2119	MV57124	LED red 6.35*3.81	GI
	DL....9	50.04.2119	MV57124	LED red 6.35*3.81	GI
	DL....10	50.04.2500	MV5352	LED yel D=5 mm	GI
	DL....11	50.04.2500	MV5352	LED yel D=5 mm	GI
	DL....12	50.04.2500	MV5352	LED yel D=5 mm	GI
	IC....1	50.09.0107	RC 4559	Dual Op. Amp.	Ra
	IC....2	50.09.0107	RC 4559	Dual Op. Amp.	Ra
	IC....3	50.05.0199	LM 324	Quad Op. Amp.	NS,Mot
	IC....4	50.07.0024	MC 14052	CMOS Analog Switch	Mot
	IC....5	50.09.0107	RC 4559	Dual Op. Amp.	Ra
	IC....6	50.17.1010	74 HC 10	Triple 3-Input NAND Gate	
	IC....7	50.17.1000	74 HC 00	Quad 2-Input NAND Gate	
	IC....8	50.17.1010	74 HC 10	Triple 3-Input NAND Gate	
	IC....9	50.09.0107	RC 4559	Dual Op. Amp.	Ra
	IC....10	50.09.0107	RC 4559	Dual Op. Amp.	Ra
	IC....11	50.05.0199	LM 324	Quad Op. Amp.	NS,Mot
	IC....12	50.09.0107	RC 4559	Dual Op. Amp.	Ra
	IC....13	50.09.0107	RC 4559	Dual Op. Amp.	Ra
	IC....14	50.17.1010	74 HC 10	Triple 3-Input NAND Gate	
	IC....15	50.17.1000	74 HC 00	Quad 2-Input NAND Gate	
	IC....16	50.17.1010	74 HC 10	Triple 3-Input NAND Gate	

IND.	POS.NO.	PART NO.	VALUE	SPECIFICATIONS / EQUIVALENT	MANUF.
	IC...17	50.07.0015	MC 14053	CMOS Analog Switch	Mot
	J.....1	54.01.0301	16-Pole	CIS Socket Strip	AMP
	J.....2	54.01.0263	7-Pole	CIS Socket Strip	AMP
	J.....3	54.01.0238	6-Pole	CIS Sopket Strip	AMP
	ME....1	1.727.360.01		VU Meter	St
	ME....2	1.727.360.01		VU Meter	St
	MP....1	43.01.0108	1 pcs	ESE Warning label	
	MP....2	53.03.0221	12 pcs	2-pole LED Socket	
	MP....3	1.011.235.03	2 pcs	Push button case 3x	St
	MP....4	1.011.235.23	2 pcs	Conductive rubber 3x	St
	MP....5	1.011.235.29	6 pcs	Bolt	St
	MP....6	1.011.235.30	6 pcs	Push button 14x5	St
	MP....7	1.011.235.33	6 pcs	Calotte yel	St
	MP....8	1.727.362.93	2 pcs	L-LST Command Panel Board	St
	MP....9	1.727.965.10	1 pcs	No. Label	St
	MP....10	1.727.965.11	1 pcs	MONITOR VU PCB	St
	P.....1	54.02.0320		Plug 2.8x0.8	AMP
	P.....2	54.02.0320		Plug 2.8x0.8	AMP
	P.....3	54.02.0320		Plug 2.8x0.8	AMP
	P.....4	54.02.0320		Plug 2.8x0.8	AMP
	Q.....1	50.03.0436	BC237B	BC547B, BC550B NPN	
	Q.....2	50.03.0436	BC237B	BC547B, BC550B NPN	
	Q.....3	50.03.0436	BC237B	BC547B, BC550B NPN	
	Q.....4	50.03.0436	BC237B	BC547B, BC550B NPN	
	Q.....5	50.03.0436	BC237B	BC547B, BC550B NPN	
	Q.....6	50.03.0436	BC237B	BC547B, BC550B NPN	
(00)	R.....1	58.01.9203	20 kOhm	10%, 0.5 W, PCerm	
(01)	R.....1	58.01.9503	50 kOhm	10%, 0.5 W, PCerm	
(00)	R.....2	57.11.3203	20 kOhm	1%, 0.25W, MF	
(01)	R.....2	57.11.3822	8.2 kOhm	1%, 0.25W, MF	
	R.....3	57.11.3203	20 kOhm	1%, 0.25W, MF	

MONITOR VU BOARD 1.727.965.00

IND.	POS.NO.	PART NO.	VALUE	SPECIFICATIONS / EQUIVALENT	MANUF.
	R.....4	57.11.4103	10 kOhm	2%, 0.25W, MF	
	R.....5	57.11.3203	20 kOhm	1%, 0.25W, MF	
	R.....6	57.11.3203	20 kOhm	1%, 0.25W, MF	
	R.....7	57.11.4103	10 kOhm	2%, 0.25W, MF	
	R.....8	57.11.4332	3.3 kOhm	2%, 0.25W, MF	
	R.....9	57.11.4474	470 kOhm	2%, 0.25W, MF	
(00)	R....10	58.01.9203	20 kOhm	10%, 0.5 W, PCerm	
(01)	R....10	58.01.9503	50 kOhm	10%, 0.5 W, PCerm	
	R....11	57.11.4472	4.7 kOhm	2%, 0.25W, MF	
	R....12	57.11.4182	1.8 kOhm	2%, 0.25W, MF	
	R....13	57.11.4151	150 Ohm	2%, 0.25W, MF	
	R....14	57.11.3202	2 kOhm	1%, 0.25W, MF	
	R....15	57.11.3751	750 Ohm	1%, 0.25W, MF	
	R....16	57.11.4332	3.3 kOhm	2%, 0.25W, MF	
	R....17	57.11.4391	390 Ohm	2%, 0.25W, MF	
	R....18	57.11.4391	390 Ohm	2%, 0.25W, MF	
	R....19	57.11.4391	390 Ohm	2%, 0.25W, MF	
	R....20	57.11.4272	2.7 kOhm	2%, 0.25W, MF	
	R....21	57.11.4153	15 kOhm	2%, 0.25W, MF	
	R....22	57.11.4153	15 kOhm	2%, 0.25W, MF	
	R....23	57.11.4153	15 kOhm	2%, 0.25W, MF	
	R....24	57.11.4682	6.8 kOhm	2%, 0.25W, MF	
	R....25	57.11.4682	6.8 kOhm	2%, 0.25W, MF	
	R....26	57.11.4682	6.8 kOhm	2%, 0.25W, MF	
	R....27	57.11.4473	47 kOhm	2%, 0.25W, MF	
	R....28	57.11.4472	4.7 kOhm	2%, 0.25W, MF	
	R....29	57.11.4473	47 kOhm	2%, 0.25W, MF	
	R....30	57.11.4472	4.7 kOhm	2%, 0.25W, MF	
	R....31	57.11.4473	47 kOhm	2%, 0.25W, MF	
	R....32	57.11.4472	4.7 kOhm	2%, 0.25W, MF	
	R....33	57.11.4332	3.3 kOhm	2%, 0.25W, MF	
	R....34	57.11.4682	6.8 kOhm	2%, 0.25W, MF	
	R....35	57.11.4103	10 kOhm	2%, 0.25W, MF	
	R....36	57.11.4473	47 kOhm	2%, 0.25W, MF	
	R....37	57.11.4473	47 kOhm	2%, 0.25W, MF	
	R....38	57.11.4472	4.7 kOhm	2%, 0.25W, MF	
	R....39	57.11.4473	47 kOhm	2%, 0.25W, MF	

IND.	POS.NO.	PART NO.	VALUE	SPECIFICATIONS / EQUIVALENT	MANUF.
	R....40	57.11.4472	4.7 kOhm	2%, 0.25W, MF	
	R....41	57.11.4473	47 kOhm	2%, 0.25W, MF	
	R....42	57.11.4472	4.7 kOhm	2%, 0.25W, MF	
	R....43	57.11.4103	10 kOhm	2%, 0.25W, MF	
	R....44	57.11.4103	10 kOhm	2%, 0.25W, MF	
	R....45	57.11.4473	47 kOhm	2%, 0.25W, MF	
	R....46	57.11.4332	3.3 kOhm	2%, 0.25W, MF	
	R....47	57.11.4391	390 Ohm	2%, 0.25W, MF	
	R....48	57.11.4332	3.3 kOhm	2%, 0.25W, MF	
	R....49	57.11.4391	390 Ohm	2%, 0.25W, MF	
	R....50	57.11.4332	3.3 kOhm	2%, 0.25W, MF	
(00)	R....51	58.01.9203	20 kOhm	10%, 0.5 W, PCerm	
(01)	R....51	58.01.9503	50 kOhm	10%, 0.5 W, PCerm	
(00)	R....52	57.11.3203	20 kOhm	1%, 0.25W, MF	
(01)	R....52	57.11.3822	8.2 kOhm	1%, 0.25W, MF	
	R....53	57.11.3203	20 kOhm	1%, 0.25W, MF	
	R....54	57.11.4103	10 kOhm	2%, 0.25W, MF	
	R....55	57.11.3203	20 kOhm	1%, 0.25W, MF	
	R....56	57.11.3203	20 kOhm	1%, 0.25W, MF	
	R....57	57.11.4103	10 kOhm	2%, 0.25W, MF	
	R....58	57.11.4332	3.3 kOhm	2%, 0.25W, MF	
	R....59	57.11.4474	470 kOhm	2%, 0.25W, MF	
(00)	R....60	58.01.9203	20 kOhm	10%, 0.5 W, PCerm	
(01)	R....60	58.01.9503	50 kOhm	10%, 0.5 W, PCerm	
	R....61	57.11.4472	4.7 kOhm	2%, 0.25W, MF	
	R....62	57.11.4182	1.8 kOhm	2%, 0.25W, MF	
	R....63	57.11.4151	150 Ohm	2%, 0.25W, MF	
	R....64	57.11.3202	2 kOhm	1%, 0.25W, MF	
	R....65	57.11.3751	750 Ohm	1%, 0.25W, MF	
	R....66	57.11.4332	3.3 kOhm	2%, 0.25W, MF	
	R....67	57.11.4221	220 Ohm	2%, 0.25W, MF	
	R....68	57.11.4221	220 Ohm	2%, 0.25W, MF	
	R....69	57.11.4473	47 kOhm	2%, 0.25W, MF	
	R....70	57.11.4473	47 kOhm	2%, 0.25W, MF	
	R....71	57.11.4153	15 kOhm	2%, 0.25W, MF	
	R....72	57.11.4153	15 kOhm	2%, 0.25W, MF	
	R....73	57.11.4153	15 kOhm	2%, 0.25W, MF	

IND.	POS.NO.	PART NO.	VALUE	SPECIFICATIONS / EQUIVALENT	MANUF.
	R....74	57.11.4272	2.7 kOhm	2%, 0.25W, MF	
	R....75	57.11.4391	390 Ohm	2%, 0.25W, MF	
	R....76	57.11.4391	390 Ohm	2%, 0.25W, MF	
	R....77	57.11.4391	390 Ohm	2%, 0.25W, MF	
	R....78	57.11.4223	22 kOhm	2%, 0.25W, MF	
	R....79	57.11.4223	22 kOhm	2%, 0.25W, MF	
	R....80	57.11.4682	6.8 kOhm	2%, 0.25W, MF	
	R....81	57.11.4682	6.8 kOhm	2%, 0.25W, MF	
	R....82	57.11.4682	6.8 kOhm	2%, 0.25W, MF	
	R....83	57.11.4103	10 kOhm	2%, 0.25W, MF	
	R....84	57.11.4103	10 kOhm	2%, 0.25W, MF	
	R....85	57.11.4103	10 kOhm	2%, 0.25W, MF	
	R....86	57.11.4103	10 kOhm	2%, 0.25W, MF	
	R....87	57.11.4332	3.3 kOhm	2%, 0.25W, MF	
	R....88	57.11.4682	6.8 kOhm	2%, 0.25W, MF	
	R....89	57.11.4103	10 kOhm	2%, 0.25W, MF	
	R....90	57.11.4103	10 kOhm	2%, 0.25W, MF	
	R....91	57.11.4103	10 kOhm	2%, 0.25W, MF	
	R....92	57.11.4103	10 kOhm	2%, 0.25W, MF	
	R....93	57.11.4103	10 kOhm	2%, 0.25W, MF	
	R....94	57.11.4103	10 kOhm	2%, 0.25W, MF	
	R....95	57.11.4103	10 kOhm	2%, 0.25W, MF	
	R....96	57.11.4332	3.3 kOhm	2%, 0.25W, MF	
	R....97	57.11.4391	390 Ohm	2%, 0.25W, MF	
	R....98	57.11.4391	390 Ohm	2%, 0.25W, MF	
	R....99	57.11.4332	3.3 kOhm	2%, 0.25W, MF	
	R...100	57.11.4332	3.3 kOhm	2%, 0.25W, MF	
	XB....1	53.04.0107		Lamp holder	
	XB....2	53.04.0107		Lamp holder	
	XB....3	53.04.0107		Lamp holder	
	XB....4	53.04.0107		Lamp holder	
	XIC...1	53.03.0166	8-Pole	IC Socket	
	XIC...2	53.03.0166	8-Pole	IC Socket	
	XIC...3	53.03.0167	14-Pole	IC Socket	
	XIC...4	53.03.0168	16-Pole	IC Socket	

IND.	POS.NO.	PART NO.	VALUE	SPECIFICATIONS / EQUIVALENT	MANUF.
	XIC...5	53.03.0166	8-Pole	IC Socket	
	XIC...6	53.03.0167	14-Pole	IC Socket	
	XIC...7	53.03.0167	14-Pole	IC Socket	
	XIC...8	53.03.0167	14-Pole	IC Socket	
	XIC...9	53.03.0166	8-Pole	IC Socket	
	XIC..10	53.03.0166	8-Pole	IC Socket	
	XIC..11	53.03.0167	14-Pole	IC Socket	
	XIC..12	53.03.0166	8-Pole	IC Socket	
	XIC..13	53.03.0166	8-Pole	IC Socket	
	XIC..14	53.03.0167	14-Pole	IC Socket	
	XIC..15	53.03.0167	14-Pole	IC Socket	
	XIC..16	53.03.0167	14-Pole	IC Socket	
	XIC..17	53.03.0168	16-Pole	IC Socket	

CER=Ceramic, EL=Electrolytic, PETP=Polyester, SI=Silicon,
MF=Metal Film, PCerm=Pot. Cermet,
MANUFACTURER: AMP=AMP, GI=General Instrument, ITT=Intermetall,
Mot=Motorola,NS=National Semiconductors , Ph=Philips,
Ra=Raytheon, St=Studer.

ORIG 88/01/05 (01) 90/01/11

MONITOR VU-PANEL 1.727.960.00

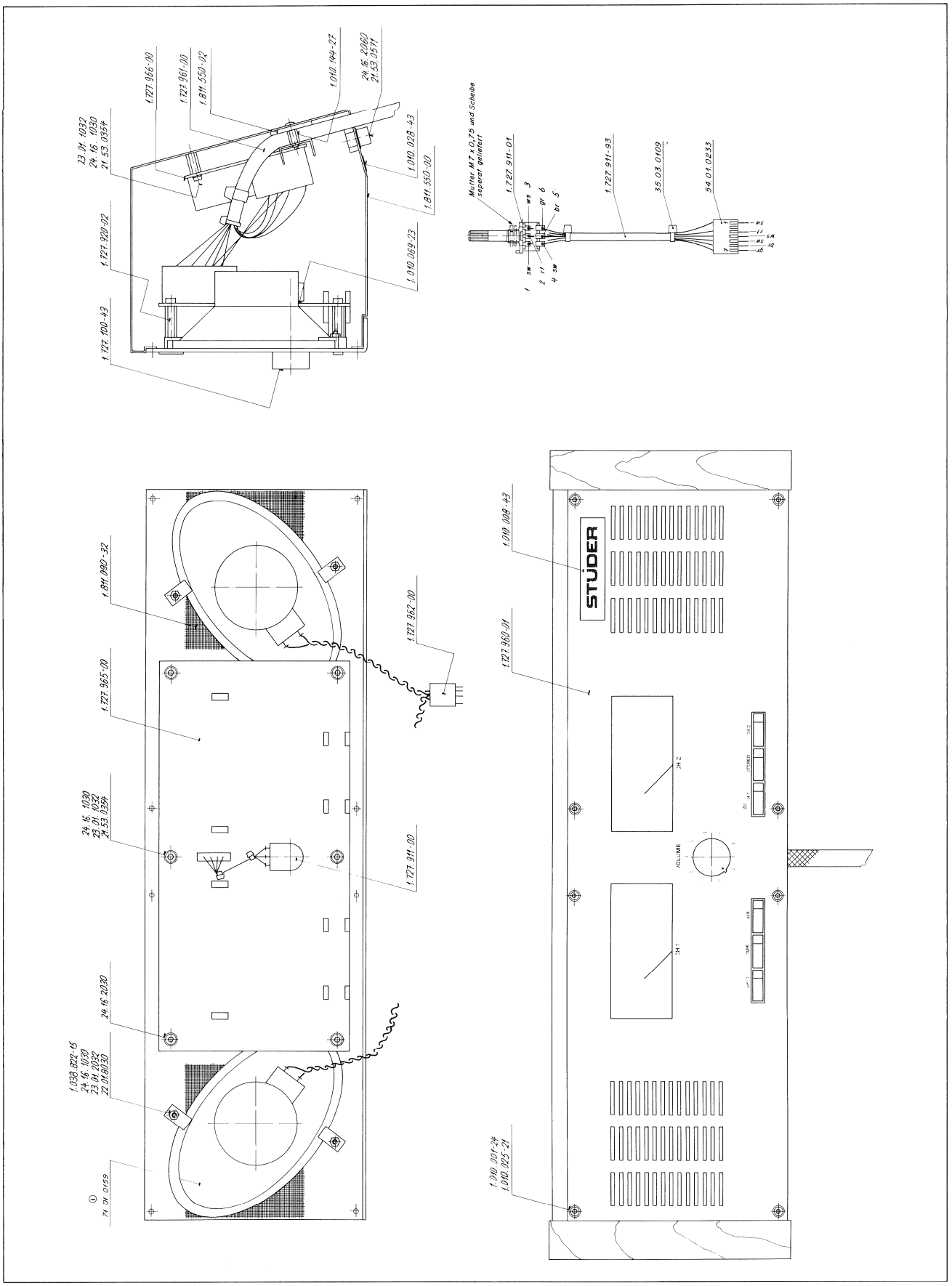

MONITOR VU BOARD, MONO 1.727.968.00

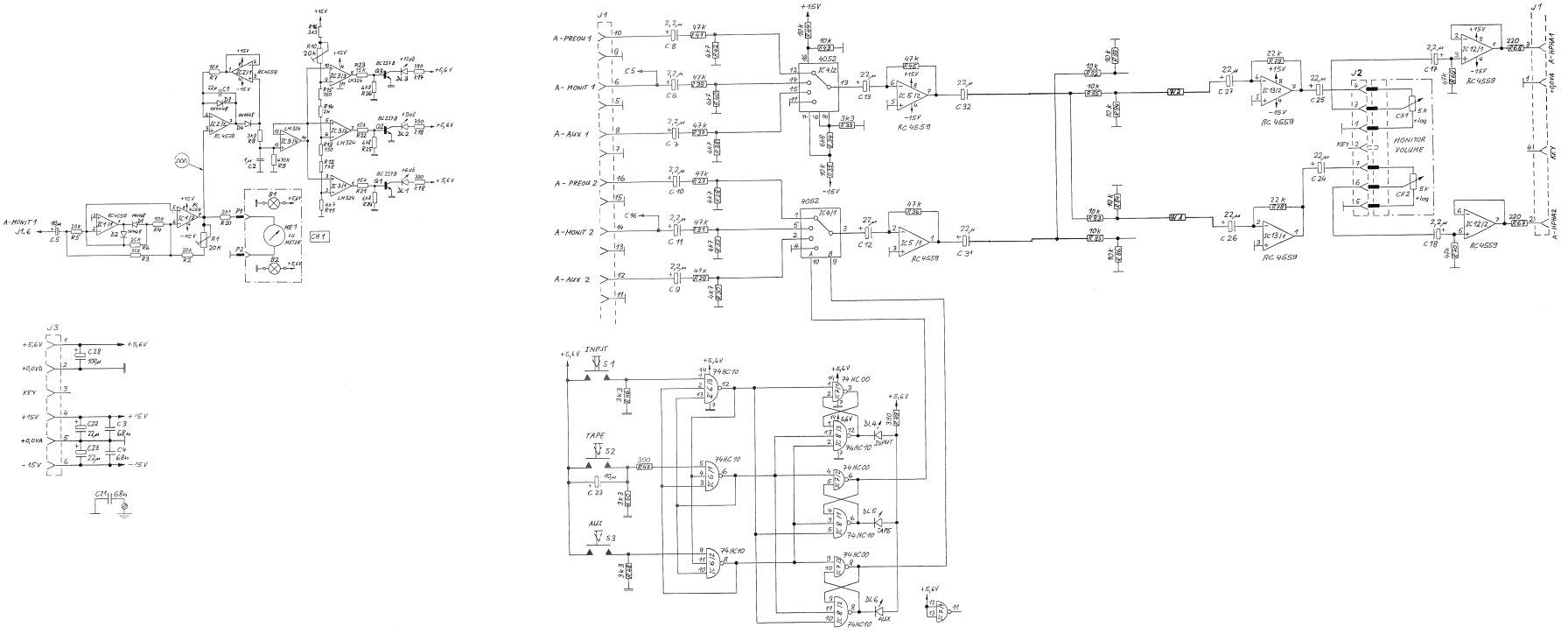

0 2.12.87 GP	. .	. .	. .	. .
	A 807 GR 96			PAGE 1 OF 3
STUDER	MONITOR VU BOARD, MONO		SC	1.727.968.00

0 2.12.87 GP	. .	. .	. .	. .
	A 807 GR 96			PAGE 2 OF 3
STUDER	MONITOR VU BOARD, MONO		SC	1.727.968.00

0 2.12.87 GP	. .	. .	. .	. .
	A 807 GR 96			PAGE 3 OF 3
STUDER	MONITOR VU BOARD, MONO		SC	1.727.968.00

MONITOR VU BOARD, MONO 1.727.968.00

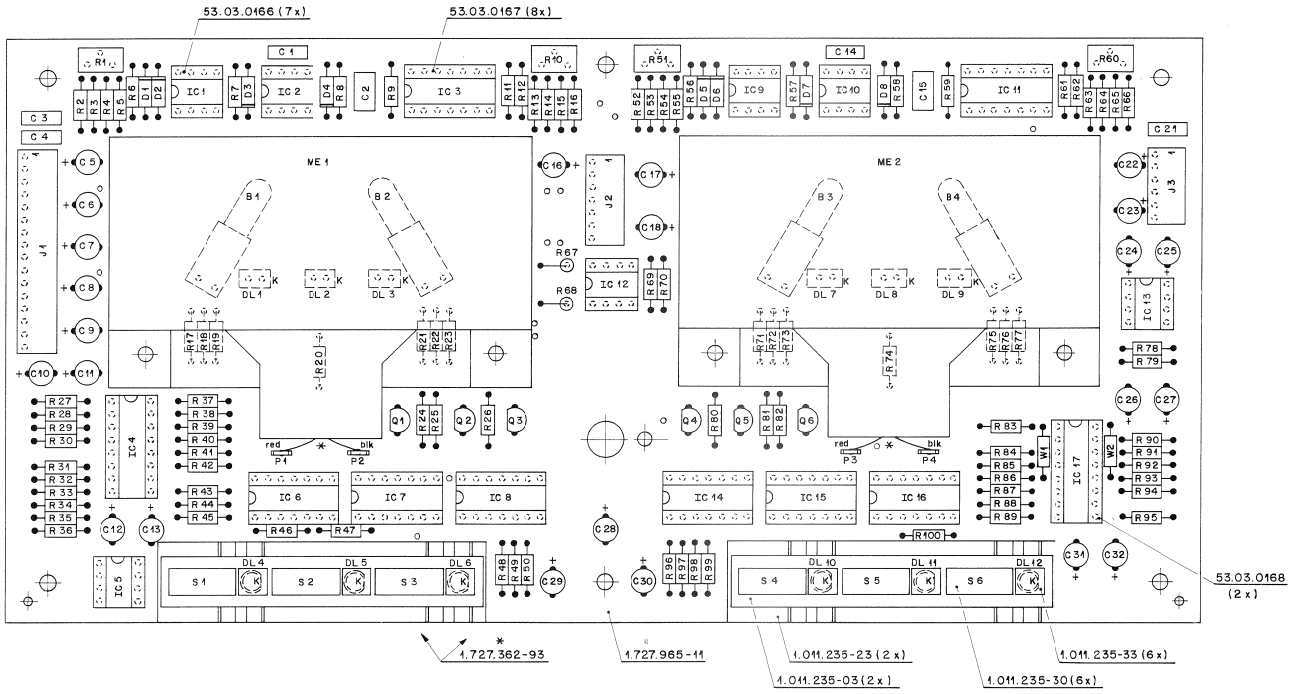

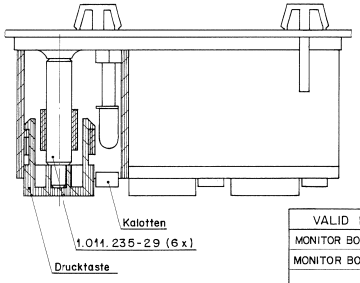

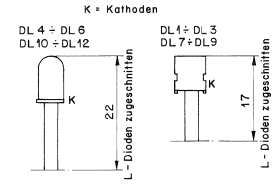

VALID FOR	NR. UNIT + NR. POS. LIST
MONITOR BOARD M. VU, KONSOLE	1. 727. 965 - 00
MONITOR BOARD M. VU, MONO	1. 727. 968 - 00

IND.	POS.NO.	PART NO.	VALUE	SPECIFICATIONS / EQUIVALENT	MANUF.
	B.....1	51.02.0144	6 V	0.03 A Lamp	
	B.....2	51.02.0144	6 V	0.03 A Lamp	
	B.....3			not used	
	B.....4			not used	
	C.....1	59.34.2220	22 pF	10% 50 V CER	
	C.....2	59.06.0105	1 uF	10% 50 V FETP	
	C.....3	59.06.0683	68 nF	10% 50 V FETP	
	C.....4	59.06.0683	68 nF	10% 50 V FETP	
	C.....5	59.22.6100	10 uF	-20% 25 V EL	
	C.....6	59.22.8229	2.2 uF	-20% 25 V EL	
	C.....7	59.22.8229	2.2 uF	-20% 25 V EL	
	C.....8	59.22.8229	2.2 uF	-20% 25 V EL	
	C.....9	59.22.8229	2.2 uF	-20% 25 V EL	
	C....10	59.22.8229	2.2 uF	-20% 25 V EL	
	C....11	59.22.8229	2.2 uF	-20% 25 V EL	
	C....12	59.22.5220	22 uF	-20% 25 V EL	
	C....13	59.22.5220	22 uF	-20% 25 V EL	
	C....14			not used	
	C....15			not used	
	C....16			not used	
	C....17	59.22.8229	2.2 uF	-20% 25 V EL	
	C....18	59.22.8229	2.2 uF	-20% 25 V EL	
	C....21	59.06.0683	68 nF	10% 50 V FETP	
	C....22	59.22.5220	22 uF	-20% 25 V EL	
	C....23	59.22.5220	22 uF	-20% 25 V EL	
	C....24	59.22.5220	22 uF	-20% 25 V EL	
	C....25	59.22.5220	22 uF	-20% 25 V EL	
	C....26	59.22.5220	22 uF	-20% 25 V EL	
	C....27	59.22.5220	22 uF	-20% 25 V EL	
	C....28	59.22.3101	100 uF	-20% 10 V EL	
	C....29	59.22.6100	10 uF	-20% 25 V EL	
	C....30			not used	
	C....31	59.22.5220	22 uF	-20% 25 V EL	
	C....32	59.22.5220	22 uF	-20% 25 V EL	
	D.....1	50.04.0125	1N4448	50 V SI	

IND.	POS.NO.	PART NO.	VALUE	SPECIFICATIONS / EQUIVALENT	MANUF.
	IC...17			not used	
	J.....1	54.01.0301	16-Pole	CIS Socket Strip	AMP
	J.....2	54.01.0263	7-Pole	CIS Socket Strip	AMP
	J.....3	54.01.0238	6-Pole	CIS Socket Strip	AMP
	ME....1	1.727.360.01		VU Meter	St
	ME....2			not used	
	MP....1	43.01.0108	1 pce	ESE Warning label	
	MP....2	53.03.0221	6 pce	2-pole LED Socket	
	MP....3	1.011.235.03	1 pce	Push button case 3x	St
	MP....4	1.011.235.23	1 pce	Conductive rubber 3x	St
	MP....5	1.011.235.29	3 pce	Knlt	St
	MP....6	1.011.235.30	3 pce	Push button 14x5	St
	MP....7	1.011.235.33	3 pce	Calotte yel	St
	MP....8	1.727.362.93	1 pce	L-LST Command Panel Board	St
	MP....9	1.727.968.10	1 pce	No. Label	St
	MP....10	1.727.965.11	1 pce	MONITOR VU PCB	St
	P.....1	54.02.0320		Plug 2.8A0.8	AMP
	P.....2	54.02.0320		Plug 2.8A0.8	AMP
	P.....3	54.02.0320		Plug 2.8A0.8	AMP
	P.....4	54.02.0320		Plug 2.8A0.8	AMP
	Q.....1	50.03.0436	BC237B	BC547B/ BC550B NPN	
	Q.....2	50.03.0436	BC237B	BC547B/ BC550B NPN	
	Q.....3	50.03.0436	BC237B	BC547B/ BC550B NPN	
	Q.....4			not used	
	Q.....5			not used	
	Q.....6			not used	
(00)	R.....1	58.01.9203	20 kOhm	10%, 0.5 W, PCerm	
(01)	R.....1	58.01.9503	50 kOhm	10%, 0.5 W, PCerm	
(00)	R.....2	57.11.3203	20 kOhm	1% 0.25W, MF	
(01)	R.....2	57.11.3822	8.2 kOhm	1% 0.25W, MF	
	R.....3	57.11.3203	20 kOhm	1% 0.25W, MF	

IND.	POS.NO.	PART NO.	VALUE	SPECIFICATIONS / EQUIVALENT	MANUF.
	D.....2	50.04.0125	1N4448	50 V SI	
	D.....3	50.04.0125	1N4448	50 V SI	
	D.....4	50.04.0125	1N4448	50 V SI	
	D.....5			not used	
	D.....6			not used	
	D.....7			not used	
	D.....8			not used	
	DL....1	50.04.2119	MV57124	LED red 6.3X4.81	GI
	DL....2	50.04.2119	MV57124	LED red 6.3X4.81	GI
	DL....3	50.04.2119	MV57124	LED red 6.3X4.81	GI
	DL....4	50.04.2500	MV5352	LED yel D=5 mm	GI
	DL....5	50.04.2500	MV5352	LED yel D=5 mm	GI
	DL....6	50.04.2500	MV5352	LED yel D=5 mm	GI
	DL....7			not used	
	DL....8			not used	
	DL....9			not used	
	DL....10			not used	
	DL....11			not used	
	DL....12			not used	
	IC....1	50.09.0107	RC 4559	Dual Op. Amp.	Ra
	IC....2	50.09.0107	RC 4559	Dual Op. Amp.	Ra
	IC....3	50.05.0199	LM 324	Quad Op. Amp.	NS,Mot
	IC....4	50.07.0024	MC 14052	CMOS Analog Switch	Mot
	IC....5	50.09.0107	RC 4559	Dual Op. Amp.	Ra
	IC....6	50.17.1010	74 HC 10	Triple 3-Input NAND Gate	
	IC....7	50.17.1000	74 HC 00	Quad 2-Input NAND Gate	
	IC....8	50.17.1010	74 HC 10	Triple 3-Input NAND Gate	
	IC....9			not used	
	IC....10			not used	
	IC....11			not used	
	IC....12	50.09.0107	RC 4559	Dual Op. Amp.	Ra
	IC....13	50.09.0107	RC 4559	Dual Op. Amp.	Ra
	IC....14			not used	
	IC....15			not used	
	IC....16			not used	

MONITOR VU BOARD, MONO 1.727.968.00

IND.	POS.NO.	PART NO.	VALUE	SPECIFICATIONS / EQUIVALENT	MANUF.
	R.....4	57.11.3103	10 kOhm	1%, 0.25W, MF	
	R.....5	57.11.3203	20 kOhm	1%, 0.25W, MF	
	R.....6	57.11.3203	20 kOhm	1%, 0.25W, MF	
	R.....7	57.11.3103	10 kOhm	1%, 0.25W, MF	
	R.....8	57.11.3332	3.3 kOhm	1%, 0.25W, MF	
	R.....9	57.11.3474	470 kOhm	1%, 0.25W, MF	
(00)	R....10	58.01.9203	20 kOhm	10%, 0.5 W, PCerm	
(01)	R....10	58.01.9503	50 kOhm	10%, 0.5 W, PCerm	
	R....11	57.11.3472	4.7 kOhm	1%, 0.25W, MF	
	R....12	57.11.3182	1.8 kOhm	1%, 0.25W, MF	
	R....13	57.11.3151	150 Ohm	1%, 0.25W, MF	
	R....14	57.11.3202	2 kOhm	1%, 0.25W, MF	
	R....15	57.11.3751	750 Ohm	1%, 0.25W, MF	
	R....16	57.11.3332	3.3 kOhm	1%, 0.25W, MF	
	R....17	57.11.3391	390 Ohm	1%, 0.25W, MF	
	R....18	57.11.3391	390 Ohm	1%, 0.25W, MF	
	R....19	57.11.3391	390 Ohm	1%, 0.25W, MF	
	R....20	57.11.3272	2.7 kOhm	1%, 0.25W, MF	
	R....21	57.11.3153	15 kOhm	1%, 0.25W, MF	
	R....22	57.11.3153	15 kOhm	1%, 0.25W, MF	
	R....23	57.11.3153	15 kOhm	1%, 0.25W, MF	
	R....24	57.11.3682	6.8 kOhm	1%, 0.25W, MF	
	R....25	57.11.3682	6.8 kOhm	1%, 0.25W, MF	
	R....26	57.11.3682	6.8 kOhm	1%, 0.25W, MF	
	R....27	57.11.3473	47 kOhm	1%, 0.25W, MF	
	R....28	57.11.3472	4.7 kOhm	1%, 0.25W, MF	
	R....29	57.11.3473	47 kOhm	1%, 0.25W, MF	
	R....30	57.11.3472	4.7 kOhm	1%, 0.25W, MF	
	R....31	57.11.3473	47 kOhm	1%, 0.25W, MF	
	R....32	57.11.3472	4.7 kOhm	1%, 0.25W, MF	
	R....33	57.11.3332	3.3 kOhm	1%, 0.25W, MF	
	R....34	57.11.3682	6.8 kOhm	1%, 0.25W, MF	
	R....35	57.11.3103	10 kOhm	1%, 0.25W, MF	
	R....36	57.11.3473	47 kOhm	1%, 0.25W, MF	
	R....37	57.11.3473	47 kOhm	1%, 0.25W, MF	
	R....38	57.11.3472	4.7 kOhm	1%, 0.25W, MF	
	R....39	57.11.3473	47 kOhm	1%, 0.25W, MF	

IND.	POS.NO.	PART NO.	VALUE	SPECIFICATIONS / EQUIVALENT	MANUF.
	R....40	57.11.3472	4.7 kOhm	1%, 0.25W, MF	
	R....41	57.11.3473	47 kOhm	1%, 0.25W, MF	
	R....42	57.11.3472	4.7 kOhm	1%, 0.25W, MF	
	R....43	57.11.3103	10 kOhm	1%, 0.25W, MF	
	R....44	57.11.3103	10 kOhm	1%, 0.25W, MF	
	R....45	57.11.3473	47 kOhm	1%, 0.25W, MF	
	R....46	57.11.3332	3.3 kOhm	1%, 0.25W, MF	
	R....47	57.11.3391	390 Ohm	1%, 0.25W, MF	
	R....48	57.11.3332	3.3 kOhm	1%, 0.25W, MF	
	R....49	57.11.3391	390 Ohm	1%, 0.25W, MF	
	R....50	57.11.3332	3.3 kOhm	1%, 0.25W, MF	
	R....67	57.11.3221	220 Ohm	1%, 0.25W, MF	
	R....68	57.11.3221	220 Ohm	1%, 0.25W, MF	
	R....69	57.11.3473	47 kOhm	1%, 0.25W, MF	
	R....70	57.11.3473	47 kOhm	1%, 0.25W, MF	
	R....78	57.11.3223	22 kOhm	1%, 0.25W, MF	
	R....79	57.11.3223	22 kOhm	1%, 0.25W, MF	
	R....83	57.11.3103	10 kOhm	1%, 0.25W, MF	
	R....84	57.11.3103	10 kOhm	1%, 0.25W, MF	
	R....85	57.11.3103	10 kOhm	1%, 0.25W, MF	
	R....86	57.11.3103	10 kOhm	1%, 0.25W, MF	
	R....92	57.11.3103	10 kOhm	1%, 0.25W, MF	
	R....93	57.11.3103	10 kOhm	1%, 0.25W, MF	
	R....94	57.11.3103	10 kOhm	1%, 0.25W, MF	
	R....95	57.11.3103	10 kOhm	1%, 0.25W, MF	
	W.....1	57.11.3000		Wire Bridge	
	W.....2	57.11.3000		Wire Bridge	
	XB....1	53.04.0107		Lamp holder	
	XB....2	53.04.0107		Lamp holder	
	XB....3			not used	
	XB....4			not used	
	XIC...1	53.03.0166	8-Pole	IC Socket	
	XIC...2	53.03.0166	8-Pole	IC Socket	
	XIC...3	53.03.0167	14-Pole	IC Socket	

IND.	POS.NO.	PART NO.	VALUE	SPECIFICATIONS / EQUIVALENT	MANUF.
	XIC...4	53.03.0168	16-Pole	IC Socket	
	XIC...5	53.03.0166	8-Pole	IC Socket	
	XIC...6	53.03.0167	14-Pole	IC Socket	
	XIC...7	53.03.0167	14-Pole	IC Socket	
	XIC...8	53.03.0167	14-Pole	IC Socket	
	XIC...9			not used	
	XIC..10			not used	
	XIC..11			not used	
	XIC..12	53.03.0166	8-Pole	IC Socket	
	XIC..13	53.03.0166	8-Pole	IC Socket	
	XIC..14			not used	
	XIC..15			not used	
	XIC..16			not used	
	XIC..17			not used	

CER=Ceramic, EL=Electrolytic, PETP=Polyester, SI=Silicon,
MF=Metal Film, PCerm=Pot. Cermet,
MANUFACTURER: AMP=AMP, GI=General Instrument, ITT=Intermetall,
Mot=Motorola,NS=National Semiconductors , Ph=Philips,
Ra=Raytheon, St=Studer.

ORIG 89/03/28 (01) 90/01/11

WIRING DIAGRAM STEREO MONITOR VU-PANEL 1.727.092.00

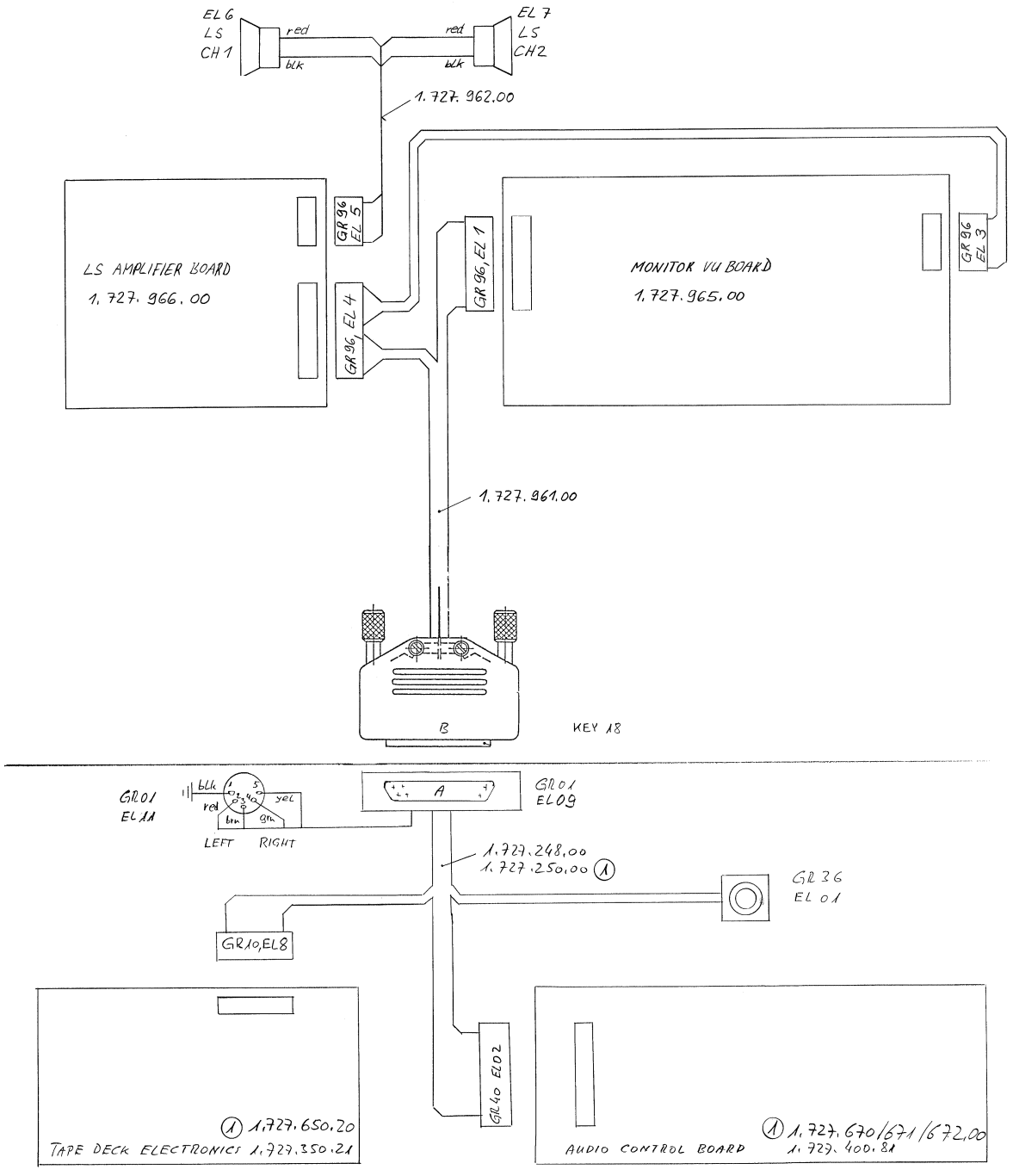

(0) 4.1.88 GP	(1) 29.10.91 Wth	. .	. .
	A 807		PAGE 1 OF 2
STUDER	WIRING DIAGRAM, MONITOR VU PANEL		1.727.092.00

WIRING DIAGRAM STEREO MONITOR VU-PANEL 1.727.092.00

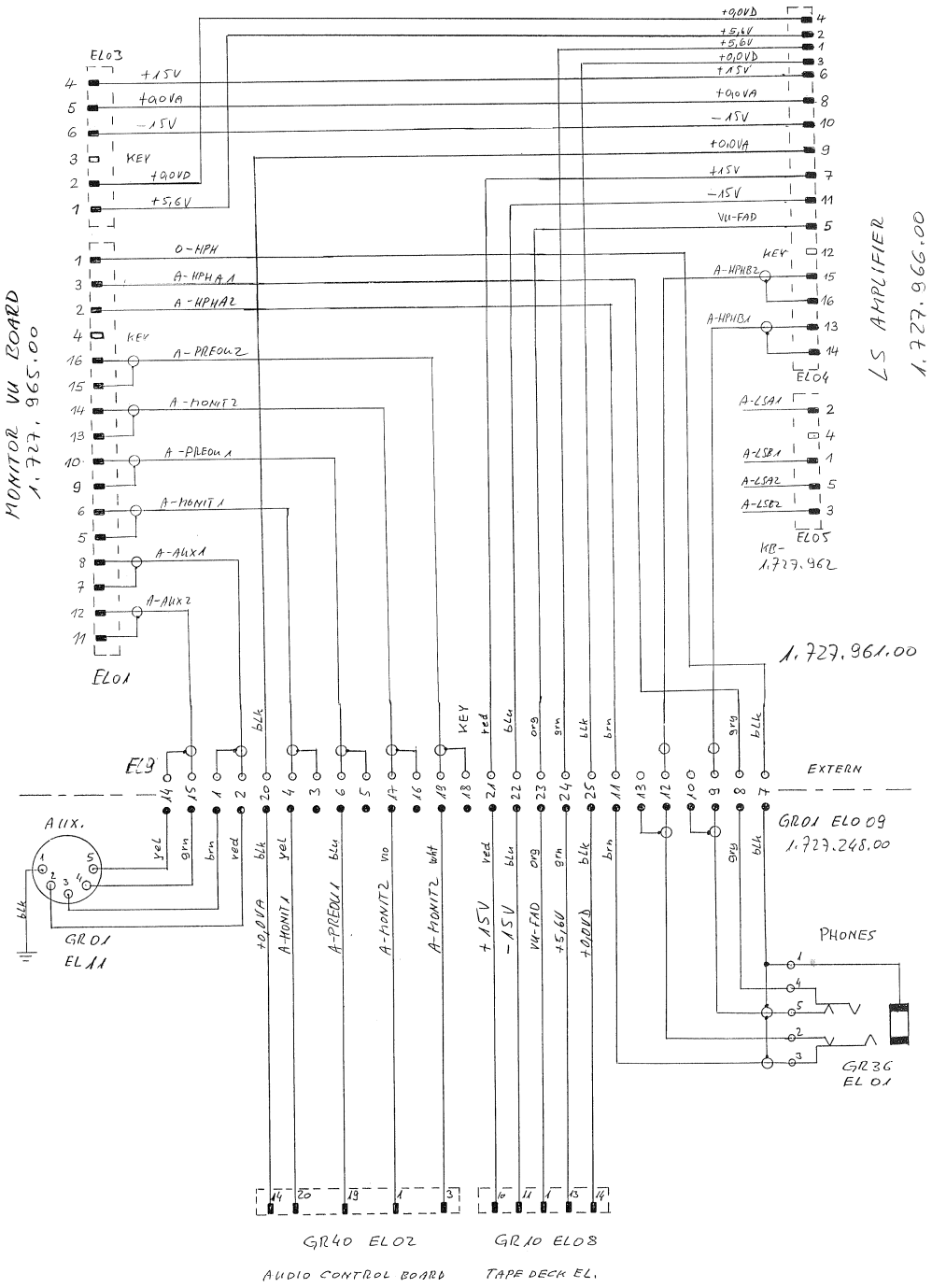

⓪ 4.1.88 WH.	① 29.10.91 WHL	○ . .	○ . .	○ . .
	A 807			PAGE 2 OF 2
STUDER	WIRING DIAGRAM, MONITOR VU PANEL			1.727.092.00

LOUD SPEAKER AMPLIFIER BOARD 1.727.966.00

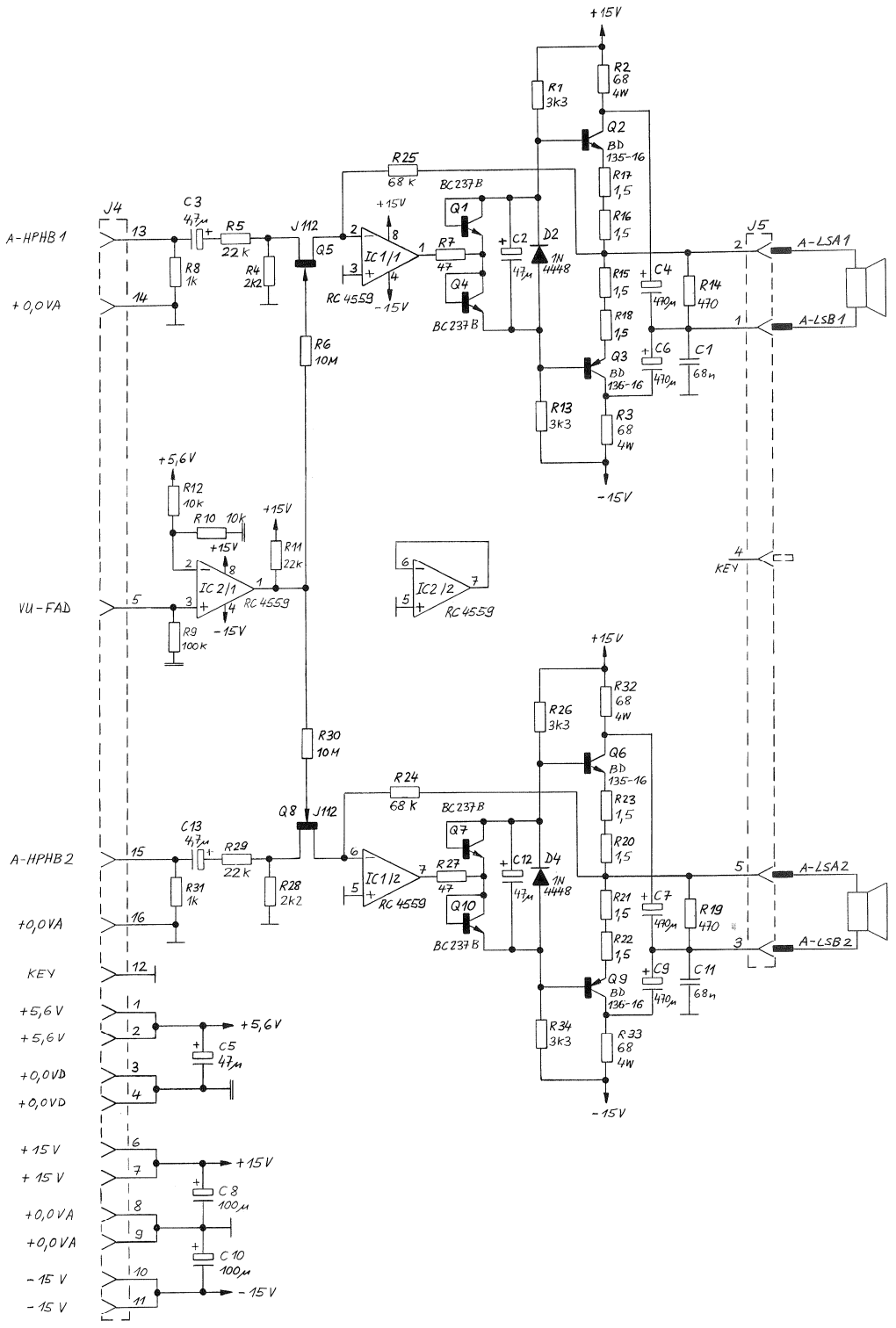

⓪ 2.12.87 GP	① 21.1.88 GP	○ . .	○ . .	○ . .
	A 807 GR 96			PAGE 1 OF 1
STUDER	LS AMPLIFIER BOARD		SC	1.727.966.00

LOUD SPEAKER AMPLIFIER BOARD 1.727.966.00

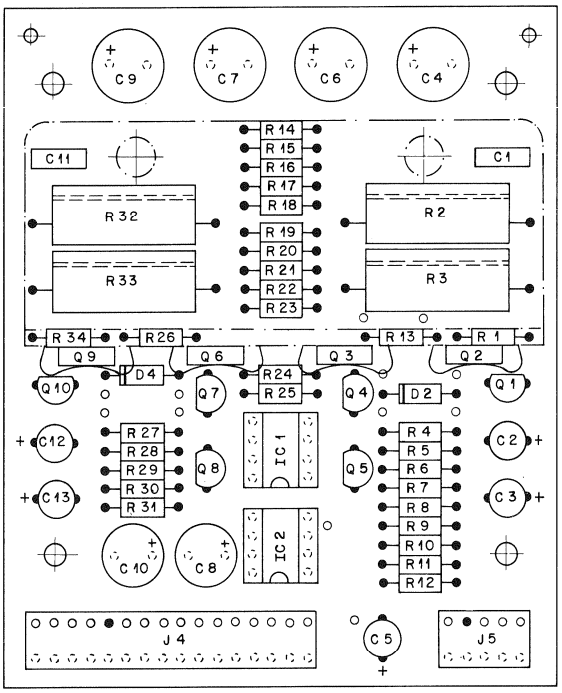

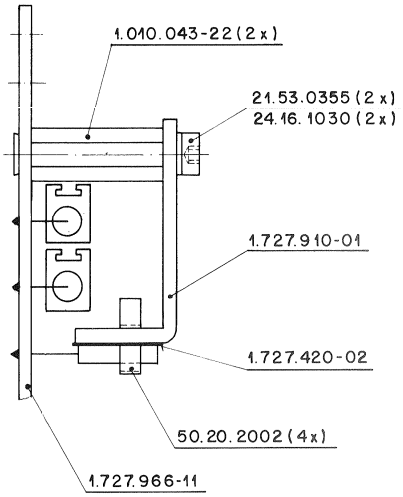

IND.	POS.NO.	PART NO.	VALUE	SPECIFICATIONS / EQUIVALENT	MANUF.
	C.....1	59.06.0683	68 nF	10% 63 V PETP	
	C.....2	59.22.3470	47 uF	-20% 10 V EL	
	C.....3	59.22.8479	4,7 uF	-20% 50 V EL	
	C.....4	59.22.4471	470 uF	-20% 16 V EL	
	C.....5	59.22.3470	47 uF	-20% 10 V EL	
	C.....6	59.22.4471	470 uF	-20% 16 V EL	
	C.....7	59.22.4471	470 uF	-20% 16 V EL	
	C.....8	59.22.5101	100 uF	-20% 25 V EL	
	C.....9	59.22.4471	470 uF	-20% 16 V EL	
	C....10	59.22.5101	100 uF	-20% 25 V EL	
	C....11	59.06.0583	68 nF	10% 63 V PETP	
	C....12	59.22.3470	47 uF	-20% 10 V EL	
	C....13	59.22.8479	4,7 uF	-20% 50 V EL	
	D.....1			not used	
	D.....2	50.04.0125	1N4448	50 V SI	
	D.....3			not used	
	D.....4	50.04.0125	1N4448	50 V SI	
	D.....5			not used	
	D.....6			not used	
	IC....1	50.09.0107	RC 4559	DUAL OP.AMP.	Ra
	IC....2	50.09.0107	RC 4559	DUAL OP.AMP.	Ra
	J.....4	54.01.0294	16-POLE	CIS Socket Strip	AMP
	J.....5	54.01.0283	5-POLE	CIS Socket Strip	AMP
	MP....1	21.53.0355	2 pcs	Screw M3*8mm	
	MP....2	24.16.1030	2 pcs	Washer	
	MP....3	50.20.2002	4 pcs	Clip, TO126	Ph
	MP....4	1.010.043.22	2 pcs	Rivet Nut M3*20mm	St
	MP....5	1.727.420.02	1 pcs	Thermoplastic	St
	MP....6	1.727.910.01	1 pcs	Heatsink	St
	MP....7	1.727.966.10	0 pcs	No.Label	St
	MP....8	1.727.966.11	1 pcs	LS Amplifier PCB	St
	Q.....1	50.03.0436	BC237B	BC547B NPN	

IND.	POS.NO.	PART NO.	VALUE	SPECIFICATIONS / EQUIVALENT	MANUF.
	Q.....2	50.03.0495	BD135-16	NPN	
	Q.....3	50.03.0510	BD136-16	PNP	
	Q.....4	50.03.0436	BC237B	BC547B NPN	
	Q.....5	50.03.0350	MPF4392	J112 FET	Mot
	Q.....6	50.03.0495	BD135-16	NPN	
	Q.....7	50.03.0436	BC237B	BC547B NPN	
	Q.....8	50.03.0350	MPF4392	J112 FET	Mot
	Q.....9	50.03.0510	BD136-16	PNP	
	Q....10	50.03.0436	BC237B	BC547B NPN	
	R.....1	57.11.3332	3,3 kOhm	1%, 0.25W, MF	
	R.....2	57.56.5680	68 Ohm	5%, 4 W, Wire	
	R.....3	57.56.5680	68 Ohm	5%, 4 W, Wire	
	R.....4	57.11.3222	2,2 kOhm	1%, 0.25W, MF	
	R.....5	57.11.3223	22 kOhm	1%, 0.25W, MF	
	R.....6	57.11.5106	10 MOhm	5%, 0.25W, MF	
	R.....7	57.11.3470	47 Ohm	1%, 0.25W, MF	
	R.....8	57.11.3102	1 kOhm	1%, 0.25W, MF	
	R.....9	57.11.3104	100 kOhm	1%, 0.25W, MF	
	R....10	57.11.3103	10 kOhm	1%, 0.25W, MF	
	R....11	57.11.3223	22 kOhm	1%, 0.25W, MF	
	R....12	57.11.3103	10 kOhm	1%, 0.25W, MF	
	R....13	57.11.3332	3,3 kOhm	1%, 0.25W, MF	
	R....14	57.11.3471	470 Ohm	1%, 0.25W, MF	
	R....15	57.11.3159	1,5 Ohm	1%, 0.25W, MF	
	R....16	57.11.3159	1,5 Ohm	1%, 0.25W, MF	
	R....17	57.11.3159	1,5 Ohm	1%, 0.25W, MF	
	R....18	57.11.3159	1,5 Ohm	1%, 0.25W, MF	
	R....19	57.11.3471	470 Ohm	1%, 0.25W, MF	
	R....20	57.11.3159	1,5 Ohm	1%, 0.25W, MF	
	R....21	57.11.3159	1,5 Ohm	1%, 0.25W, MF	
	R....22	57.11.3159	1,5 Ohm	1%, 0.25W, MF	
	R....23	57.11.3159	1,5 Ohm	1%, 0.25W, MF	
(00)	R....24	57.11.3223	22 kOhm	1%, 0.25W, MF	
(01)	R....24	57.11.3683	68 kOhm	1%, 0.25W, MF	
(00)	R....25	57.11.3223	22 kOhm	1%, 0.25W, MF	
(01)	R....25	57.11.3683	68 kOhm	1%, 0.25W, MF	

IND.	POS.NO.	PART NO.	VALUE	SPECIFICATIONS / EQUIVALENT	MANUF.
	R....26	57.11.3332	3,3 kOhm	1%, 0.25W, MF	
	R....27	57.11.3470	47 Ohm	1%, 0.25W, MF	
	R....28	57.11.3222	2,2 kOhm	1%, 0.25W, MF	
	R....29	57.11.3223	22 kOhm	1%, 0.25W, MF	
	R....30	57.11.5106	10 MOhm	5%, 0.25W, MF	
	R....31	57.11.3102	1 kOhm	1%, 0.25W, MF	
	R....32	57.56.5680	68 Ohm	5%, 4 W, Wire	
	R....33	57.56.5680	68 Ohm	5%, 4 W, Wire	
	R....34	57.11.3332	3,3 kOhm	1%, 0.25W, MF	
	XIC...1	53.03.0166	8 Pole	IC Socket	
	XIC...2	53.03.0166	8 Pole	IC Socket	

(01) Encrease of gain.
CER=Ceramic, EL=Electrolytic, PETP=Polyester, SI=Silicon,
MF=Metal Film.
MANUFACTURER: AMP=AMP,Mot=Motorola,Ph=Philips,Ra=Raytheon,St=Studer.

ORIG 87/11/30 (01) 88/01/21

WIRING DIAGRAM TIME CODE PROCESSOR BOARD 1.727.700.00

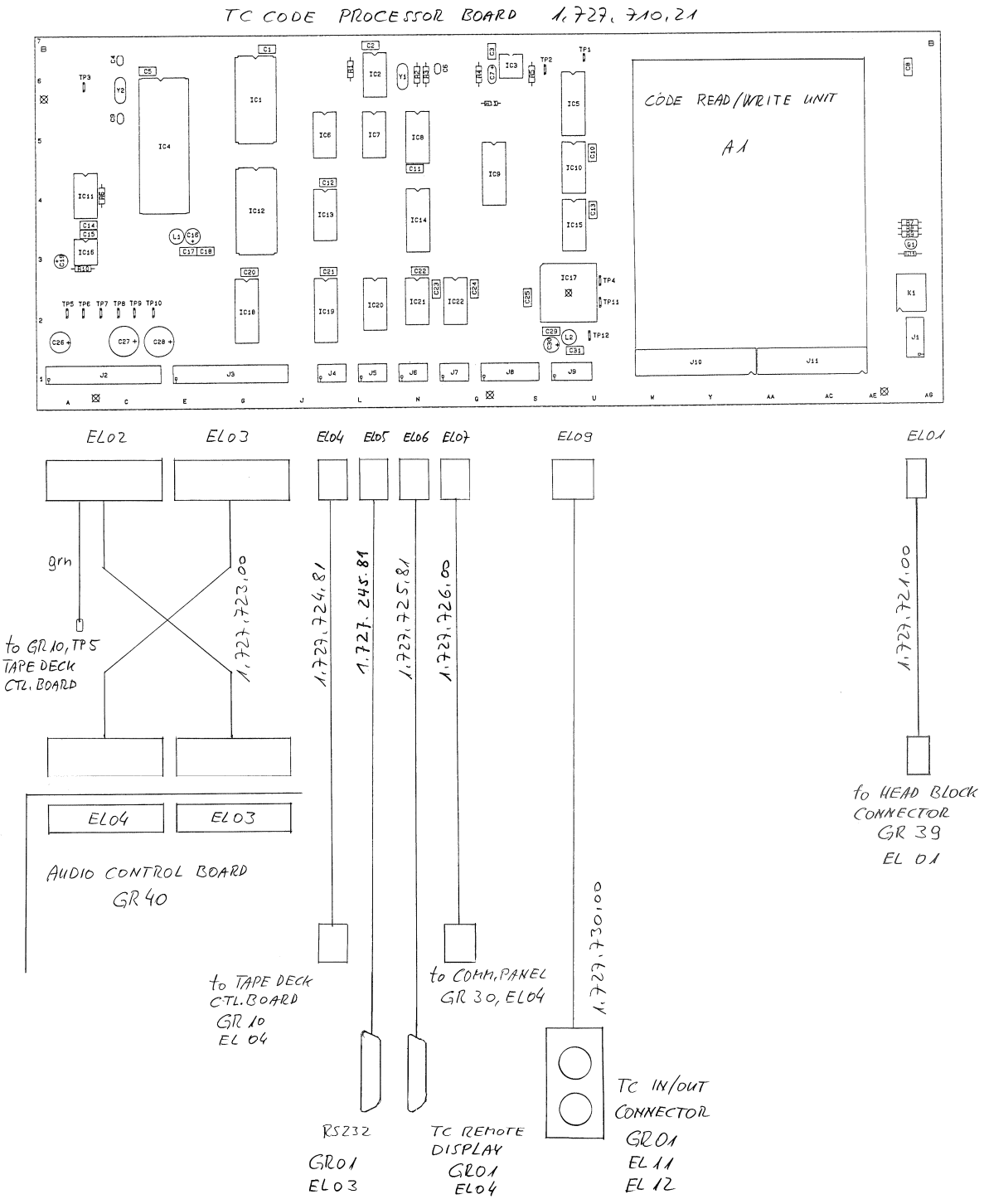

0 5.12.91 WAh	. .	. .	. .	. .
	A 807 TC			PAGE 1 OF 1
STUDER	TC CODE PROCESSOR WIRING DIAGR.			1.727.700.00

TC PROCESSOR BOARD 1.727.710.21

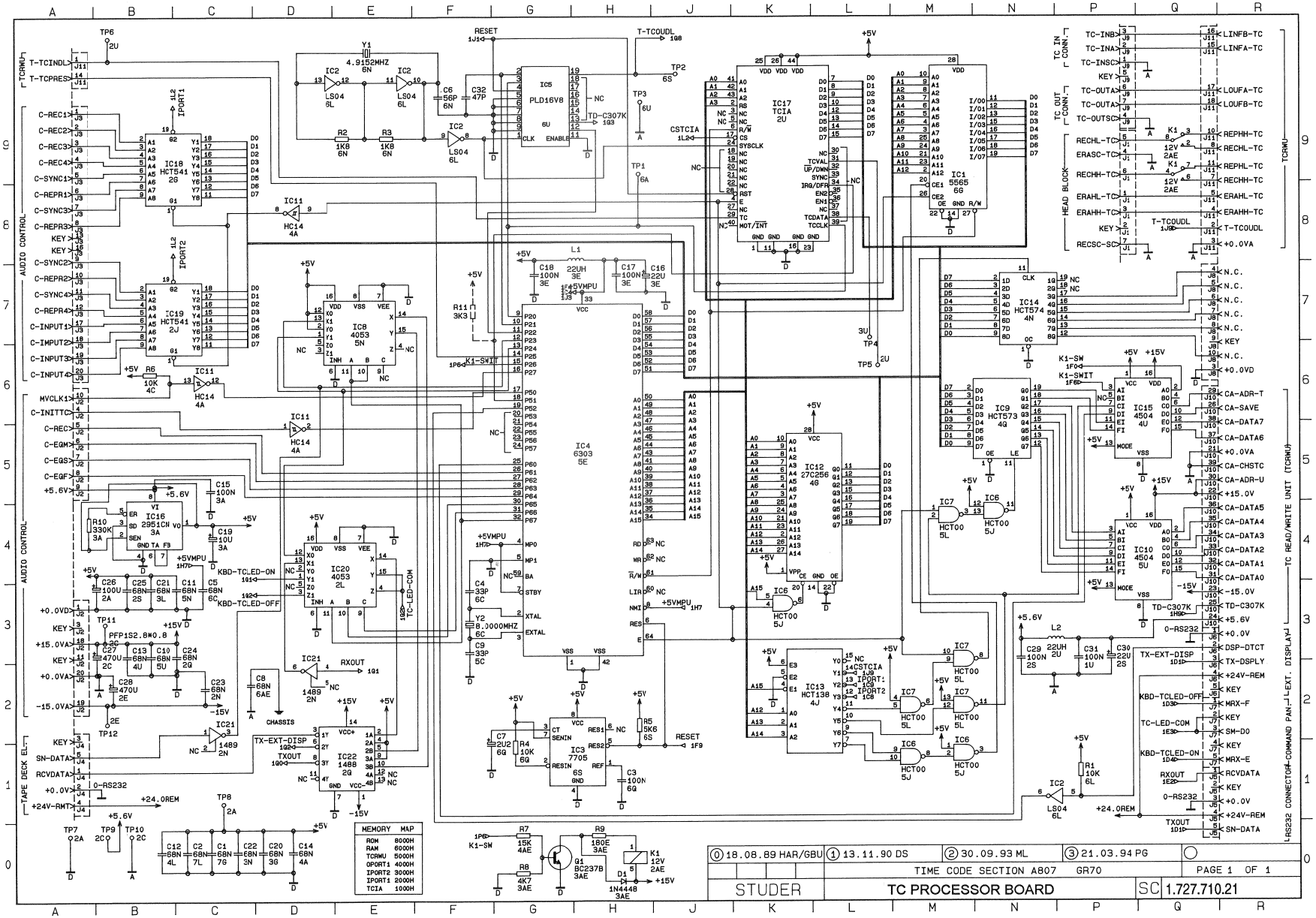

TC PROCESSOR BOARD 1.727.710.21

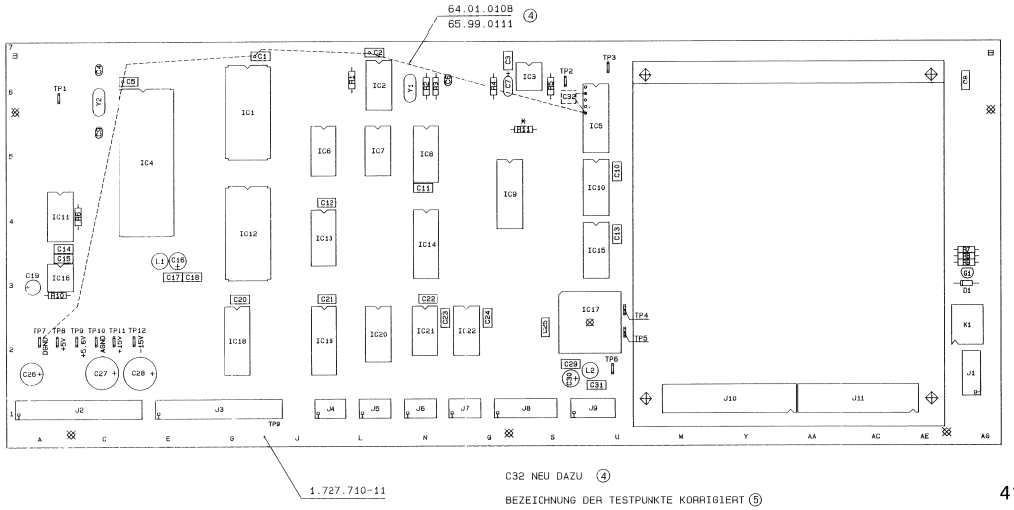

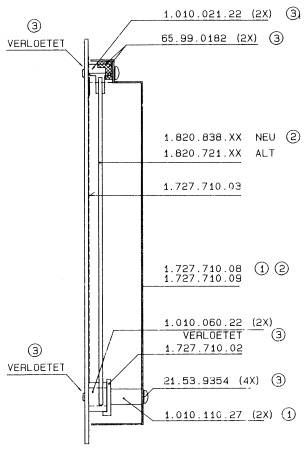

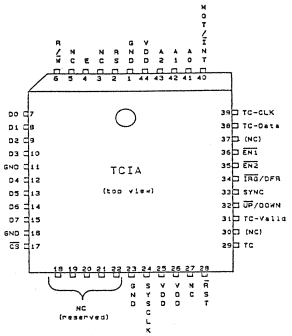

C32 NEU DAZU ④

BEZEICHNUNG DER TESTPUNKTE KORRIGIERT ⑤

TP1 Timecode clock signal
TP2 Timecode delayed
TP3 +0VA
TP4 Timecode data
TP5 Timecode valid signal
TP6 Timecode input signal
TP7 +0VD
TP8 +5.0V
TP9 +5.6V
TP10 +0VA
TP11 +15V
TP12 -15V

STECKER	CODIERUNG IN LOCH NR:
J1	2
J2	11
J3	13
J4	3
J5	2
J6	5
J7	2 UND 4
J8	9
J9	5

*MANUELL BESTUECKT

NR.ETIKETTE 1.727.710-10
43.01.0108, 1.101.001-20
AUFGEKLEBT NACH FABRIKATIONSMUSTER

CODIERUNG: SCHALTDRAHT 69.01.0108 0.8 X 8MM
(MUSS 1MM VORSTEHEN)

⑤	21.03.94	PG	HAE	HAE
④	30.09.93	VH	HAE	HAE
③	11.04.90	DM	WTH	SKL
②	02.02.90	VH	ZB	SKL
①	30.01.90	DM	WTH	SKL
⓪	24.10.89	VH	WTH	ROM
IND.	DATUM	GEZ.	GEPR.	GES.
	BLATT 1 VON 1			
BP	1.727.710.21			

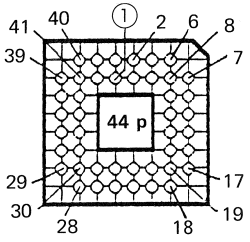

TCIA
Solder side view

Ad	..POS..	...REF.No...	DESCRIPTION.....MANUFACTURER
	A.....1	1.820.721.86	Time Code Read-Write Unit St
	C.....1	59.06.0683	68 nF 10% 63 V PETP
	C.....2	59.06.0683	68 nF 10% 63 V PETP
	C.....3	59.06.5104	100 nF 5% 63 V PETP
	C.....4	59.34.2330	33 pF 5% 63 V CER
	C.....5	59.06.0683	68 nF 10% 63 V PETP
	C.....6	59.34.4560	56 pF 5% 63 V CER
	C.....7	59.26.2229	2.2 uF 20% 16 V SAL
	C.....8	59.06.0683	68 nF 10% 63 V PETP
	C.....9	59.34.2330	33 pF 5% 63 V CER
	C....10	59.06.0683	68 nF 10% 63 V PETP
	C....11	59.06.0683	68 nF 10% 63 V PETP
	C....12	59.06.0683	68 nF 10% 63 V PETP
	C....13	59.06.0683	68 nF 10% 63 V PETP
	C....14	59.06.0683	68 nF 10% 63 V PETP
	C....15	59.06.0104	100 nF 10% 63 V PETP
	C....16	59.22.6220	22 uF -20% 35 V EL
	C....17	59.06.0104	100 nF 10% 25 V PETP
	C....18	59.06.0104	100 nF 10% 63 V PETP
	C....19	59.22.6100	10 uF -20% 35 V EL
	C....20	59.06.0683	68 nF 10% 63 V PETP
	C....21	59.06.0683	68 nF 10% 63 V PETP
	C....22	59.06.0683	68 nF 10% 63 V PETP
	C....23	59.06.0683	68 nF 10% 63 V PETP
	C....24	59.06.0683	68 nF 10% 63 V PETP
	C....25	59.06.0683	68 nF 10% 63 V PETP
	C....26	59.22.5101	100 uF -20% 25 V EL
	C....27	59.22.5471	470 uF -20% 25 V EL

Ad	..POS..	...REF.No...	DESCRIPTION.....MANUFACTURER
	C....28	59.22.5471	470 uF -20% 25 V EL
	C....29	59.06.3104	100 nF 10% 63 V PETP
	C....30	59.22.5220	22 uF -20% 35 V EL
	C....31	59.06.3104	100 nF 10% 63 V PETP
C1	C....32	59.34.2470	47 pF 10% 63 V CER
	D.....1	50.04.3125	1N4448 Diode
	IC....1	50.14.3133	CD6264LP15
	IC....2	50.06.3004	74 LS 04 Hex Inverter
	IC....3	50.11.2122	TL7705ACP Reset Circuit
	IC....4	50.16.3121	HD63B03YP 8-Bit Microprocessor
	IC....5	50.18.3100	GAL 16 V TC Biphase Converter, SW 1.727.712.20 St
	IC....6	50.17.3000	74 HCT 00 Quad 2-Input NAND Gate
	IC....7	50.17.3000	74 HCT 00 Quad 2-Input NAND Gate
	IC....8	50.07.3015	MC 14053 Triple 3-Ch Analog Switch, CMOS
	IC....9	50.17.3573	74 HCT573 Octal D-Type Trans. Latch
	IC...10	50.15.3103	MC 14504B Hex in/out Voltage Level Shifter
	IC...11	50.17.1014	74 HC 14 Hex Schmitt-Trigger Inverter
	IC...12	50.14.2004	HN27C256 EPROM, SW A807 TCP 24/90, 1.727.711.21 St
	IC...13	50.17.3138	74 HCT138 H-Cmos 3/8 Decoder
	IC...14	50.17.3574	74 HCT574 octal D-Type Flip-Flop
	IC...15	50.15.3103	MC 14504B Hex in/out Voltage Level Shifter
	IC...16	50.10.3115	LP2951 Voltage Regulator
	IC...17	50.50.3020	TCIA SMPTE/EBU Time Code Interface Adapter
	IC...18	50.17.3541	74 HCT541 H-CMOS Octal Buffer
	IC...19	50.17.3541	74 HCT541 H-CMOS Octal Buffer
	IC...20	50.07.3015	MC 14053 Triple 3-Ch Analog Switch, CMOS

Ad	..POS..	...REF.No...	DESCRIPTION.....MANUFACTURER
	IC...21	50.15.0116	MC 1489 P Quad Line Receiver RS 232
	IC...22	50.15.0106	MC 1488 P Quad Line Driver RS 232
	J.....1	54.01.0218	7-Pole CIS Socket Strip AMP
	J.....2	54.01.0226	20-Pole CIS Socket Strip AMP
	J.....3	54.01.0224	20-Pole CIS Socket Strip AMP
	J.....4	54.01.0288	5-Pole CIS Socket Strip AMP
	J.....5	54.01.0288	5-Pole CIS Socket Strip AMP
	J.....6	54.01.0288	5-Pole CIS Socket Strip AMP
	J.....7	54.01.0288	5-Pole CIS Socket Strip AMP
	J.....8	54.01.0290	10-Pole CIS Socket Strip AMP
	J.....9	54.01.0218	7-Pole CIS Socket Strip AMP
	J....10	54.10.2026	20 Pole Print Socket Strip
	J....11	54.10.2018	18 Pole Print Socket Strip
	K.....1	56.04.0171	12 V Relais 2U
	L.....1	62.02.3220	22 MH
	L.....2	62.02.3220	22 MH
	MP....1	1.727.710.11	1 pce TC Processor PCB St
	MP....2	1.010.021.22	2 pcs Rivet bolt, M3 * 10.5 St
	MP....3	1.010.060.22	2 pcs Rivet bolt, M3 * 7 St
	MP....4	1.727.710.02	1 pce Mounting profile St
	MP....5	1.727.710.01	1 pce Screen bonnet St
	MP....6	21.53.9354	4 pcs Screw, M3 * 6
	MP....9	1.010.110.27	2 pcs Screw bolt, M3 * 18
	MP...10	65.99.0182	3 pcs Foam rubber stripe, l=94

Ad	..POS..	...REF.No...	DESCRIPTION.....MANUFACTURER
	MP...11	1.727.710.03	1 pce Isolation St
	MP...12	1.727.710.04	1 pce Text Label St
	Q.....1	50.03.0436	BC237B NPN
	R.....1	57.11.3103	10 kOhm 1%, 0.25W, MF
	R.....2	57.11.3182	1.8 kOhm 1%, 0.25W, MF
	R.....3	57.11.3182	1.8 kOhm 1%, 0.25W, MF
	R.....4	57.11.3103	10 kOhm 1%, 0.25W, MF
	R.....5	57.11.3562	5.6 kOhm 1%, 0.25W, MF
	R.....6	57.11.3103	10 kOhm 1%, 0.25W, MF
	R.....7	57.11.3153	15 kOhm 1%, 0.25W, MF
	R.....8	57.11.3472	4.7 kOhm 1%, 0.25W, MF
	R.....9	57.11.3181	180 Ohm 1%, 0.25W, MF
	R....10	57.11.3334	330 kOhm 1%, 0.25W, MF
	R....11	57.11.3332	3.3 kOhm 1%, 0.25W, MF
	TP....1	54.02.0320	Test Point AMP
	TP....2	54.02.0320	Test Point AMP
	TP....3	54.02.0320	Test Point AMP
	TP....4	54.02.0320	Test Point AMP
	TP....5	54.02.0320	Test Point AMP
	TP....6	54.02.0320	Test Point AMP
	TP....7	54.02.0320	Test Point AMP
	TP....8	54.02.0320	Test Point AMP
	TP....9	54.02.0320	Test Point AMP
	TP...10	54.02.0320	Test Point AMP
	TP...11	54.02.0320	Test Point AMP
	TP...12	54.02.0320	Test Point AMP
	XIC...1	53.03.0173	28 Pole IC Socket
	XIC...2	53.03.0167	14 Pole IC Socket
	XIC...3	53.03.0166	8 Pole IC Socket
	XIC...4	53.03.0364	64 Pole IC Socket
	XIC...5	53.03.0165	20 Pole IC Socket
	XIC...6	53.03.0167	14 Pole IC Socket
	XIC...7	53.03.0167	14 Pole IC Socket
	XIC...8	53.03.0168	16 Pole IC Socket
	XIC...9	53.03.0165	20 Pole IC Socket
	XIC..10	53.03.0168	16 Pole IC Socket
	XIC..11	53.03.0167	14 Pole IC Socket
	XIC..12	53.03.0173	28 Pole IC Socket
	XIC..13	53.03.0168	16 Pole IC Socket
	XIC..14	53.03.0165	20 Pole IC Socket
	XIC..15	53.03.0168	16 Pole IC Socket
	XIC..16	53.03.0166	8 Pole IC Socket
	XIC..17	53.03.2244	44 Pole IC Socket
	XIC..18	53.03.0165	20 Pole IC Socket
	XIC..19	53.03.0165	20 Pole IC Socket
	XIC..20	53.03.0168	16 Pole IC Socket
	XIC..21	53.03.0167	14 Pole IC Socket
	XIC..22	53.03.0167	14 Pole IC Socket
	Y.....1	89.01.0560	4.9152 MHz Quarz TD 18
	Y.....2	89.01.1008	8.0000 MHz Quarz TD 18

(01) 30.09.93 additional C32

EL=Electrolytic, PETP=Polyester, PP=Polypropylen, SI=Silicon ,
MF=Metal Film, PMG=Cermet, CER=Ceramic, SAL=Solid Aluminium
MANUFACTURER: AMP=AMP, Ph=Philips, St=Studer

1.727.710.21	TC PROCESSOR BOARD	Wth90/06/1200
1.727.710.21	TC PROCESSOR BOARD	ML93/09/3001

★ R15: LINE INPUT CALIBRATION RECORD
★ R2: RECORD LEVEL SETTING FOR 7,5" (3¾IPS)
★ R8: RECORD LEVEL SETTING FOR 15"
★ R10: RECORD LEVEL SETTING FOR 30"
★ C9: BIAS CURRENT ALIGNMENT

TIME CODE READ-WRITE UNIT 1.820.721.87

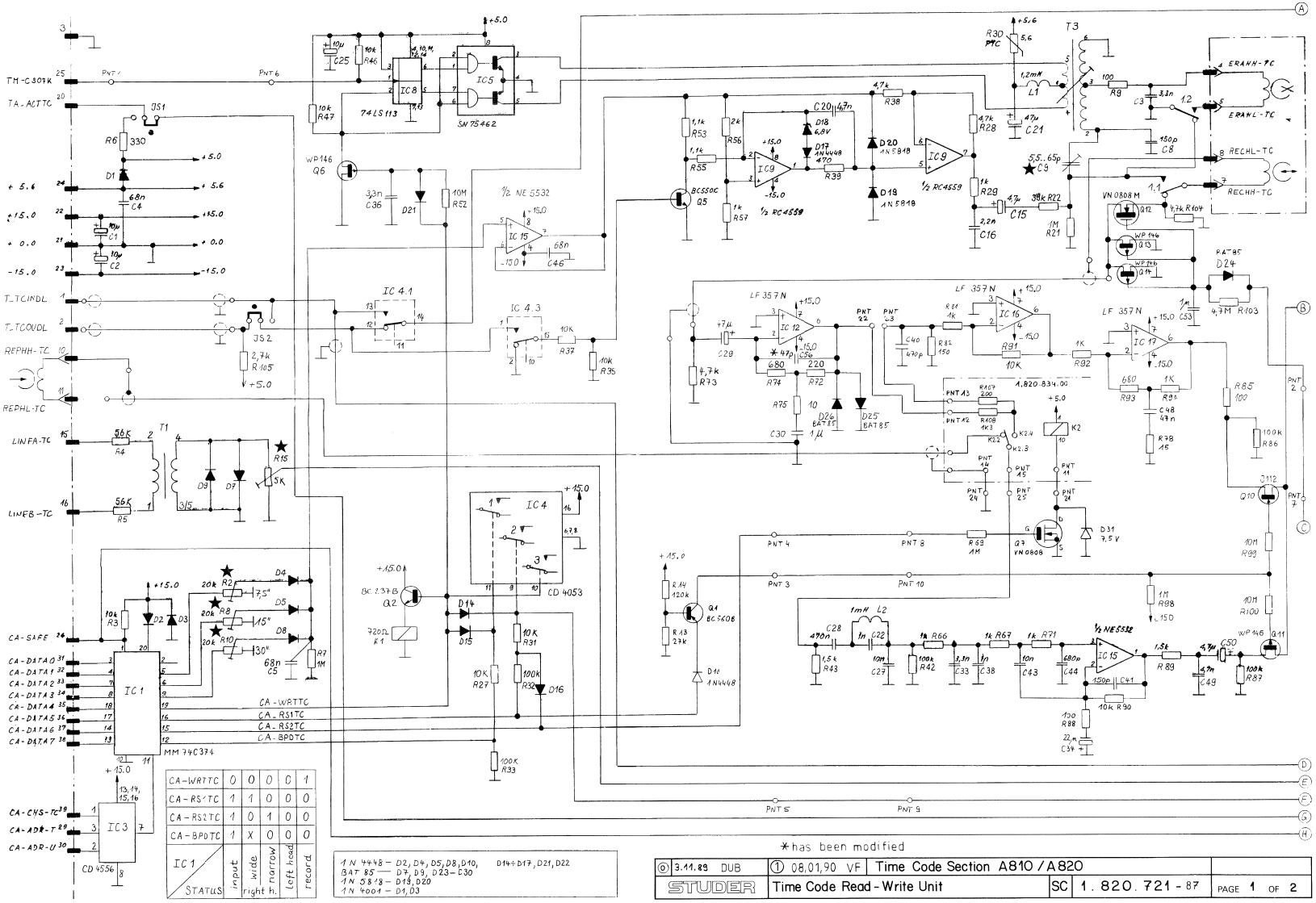

IC1 STATUS	input	wide	narrow	left head	record
CA-WRTTC	0	0	0	0	1
CA-RS1TC	1	1	0	0	0
CA-RS2TC	1	0	1	0	0
CA-BPDTC	1	X	0	0	0

1 N 4448 – D2, D4, D5, D8, D10, D14÷D17, D21, D22
BAT 85 — D7, D9, D23–D30
1 N 5818 – D19, D20
1 N 4001 – D1, D3

*has been modified

⓪ 3.11.89 DUB	① 08,01,90 VF	Time Code Section A810 / A820		
STUDER	Time Code Read-Write Unit	SC	1.820.721-87	PAGE 1 OF 2

TIME CODE READ-WRITE UNIT 1.820.721.87

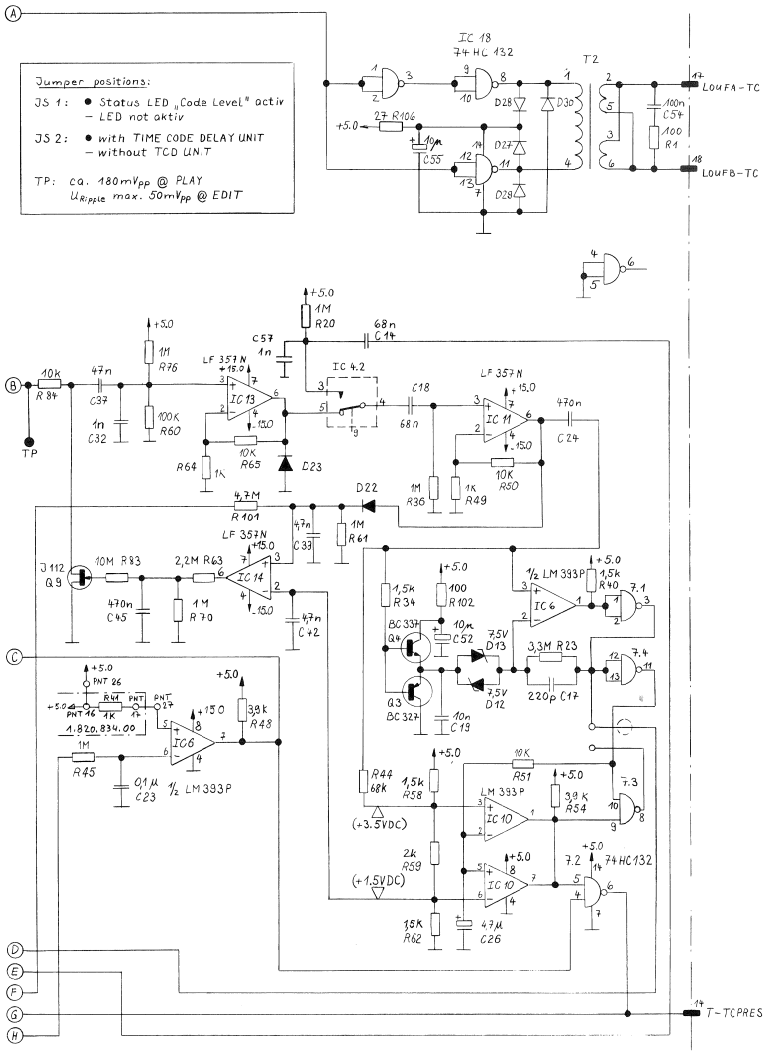

© 3.11.83 DUB	① 08.01.90 VF	Time Code Section A 810 / A 820		
STUDER	Time Code Read-Write Unit	SC	1.820.721-87	PAGE 2 OF 2

TIME CODE READ-WRITE UNIT 1.820.721.87

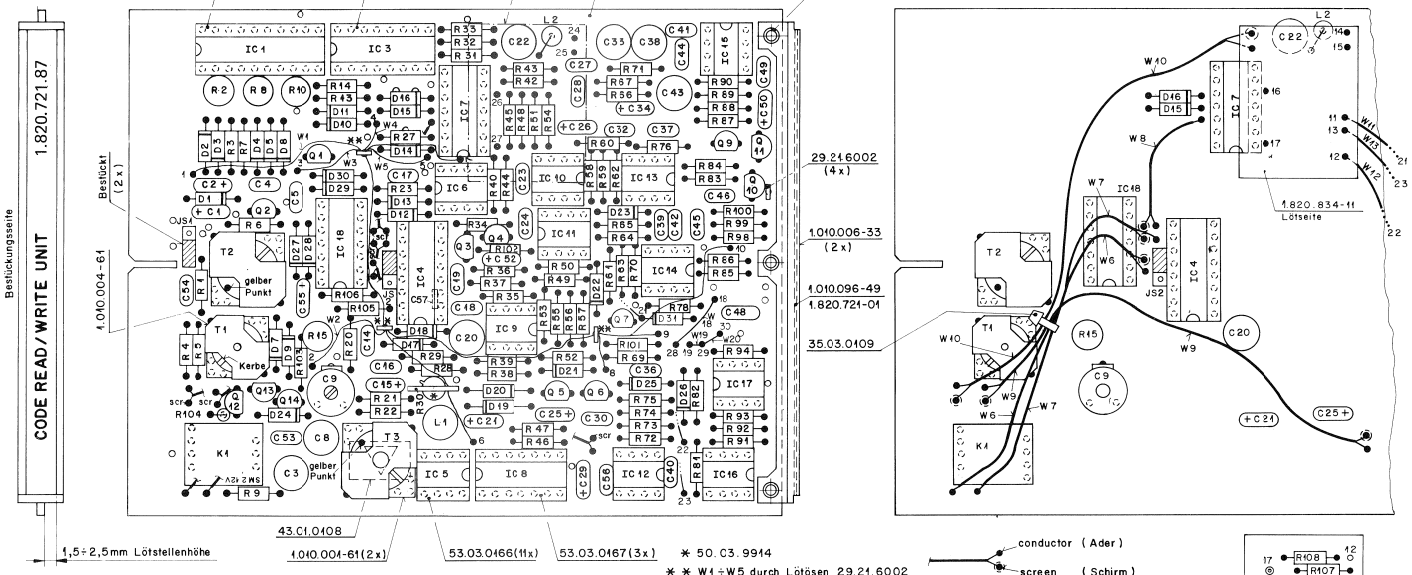

* 50.03.9914

** W1÷W5 durch Lötösen 29.21.6002 hindurchgeführt.

Drahtverbindungen

Nr.	Punkt ◄► Punkt	Norm Nr.	Verarbeitung Abschneidelänge	Verarbeitung Abisolierung	
W 1	1 ◄► 6	1.010.115-64			
W 2	2 ◄► 7	1.010.113-64			
W 3	3 ◄► 10	1.010.118-64			
W 4	4 ◄► 8	1.010.115-64			
W 5	5 ◄► 9	1.010.116-64			
W 6		64.03.0186	95 mm	Bild 1	
W 7		64.03.0186	90 mm	Bild 1	
W 8		64.03.0186	40 mm	Bild 1	
W 9		64.03.0186	115 mm	Bild 2	
W 10		64.03.0186	130 mm	Bild 2	
W 11	11 (1.820.834) ◄► 21	1.010.110-64			
W 12	12 (1.820.834) ◄► 22	1.010.113-64			
W 13	13 (1.820.834) ◄► 23	1.010.114-64			
W 14	14 (1.820.834) ◄► 24	1.010.019-54 (Stift)			①
W 15	15 (1.820.834) ◄► 25	1.010.019-54 (Stift)			①
W 16	16 (1.820.834) ◄► 26	1.010.019-54 (Stift)			①
W 17	17 (1.820.834) ◄► 27	1.010.019-54 (Stift)			①
W 18	18 ◄► 28	1.010.107-64			
W 19	19 ◄► 29	64.01.0104			
W 20	29 ◄► 30	64.01.0104			

TIME CODE READ-WRITE UNIT 1.820.721.87

IND.	POS.NO.	PART NO.	VALUE	SPECIFICATIONS / EQUIVALENT	MANUF.
	C....1	59.26.2100	10 uF	20%, 16V, Sal	Ph,Ri
	C....2	59.26.2100	10 uF	20%, 16V, Sal	Ph,Ri
	C....3	59.05.1332	3.3 nF	2.5%	
	C....4	59.06.0683	68 uF	10%	
	C....5	59.06.0683	68 nF	10%	
	C....6		not used		
	C....7		not used		
	C....8	59.05.2151	150 pF	2.5%	
	C....9	59.18.0102	65 pF	Trimmer Capacitor, Philips Nr 2222 808 01001	
	C....10		not used		
	C....11		not used		
	C....12		not used		
	C....13		not used		
	C....14	59.06.0683	68 nF	10%	
	C....15	59.26.5479	4.7 uF	20%, 25V, Sal	Ph,Ri
	C....16	59.06.0222	2.2 nF	10%	
	C....17	59.34.4221	220 pF	5%, Cer	
	C....18	59.06.0683	68 nF	10%	
	C....19	59.06.0103	10 nF	10%	
	C....20	59.05.2472	4.7 nF	2.5%	
	C....21	59.26.0470	47 uF	20%, 6.3V, Sal	Ph,Ri
	C....22	59.05.1102	1 nF	1%	
	C....23	59.06.0104	100 nF	10%	
	C....24	59.06.0474	470 nF	10%	
	C....25	59.26.2100	10 uF	20%, 16V, Sal	Ph,Ri
	C....26	59.26.5479	4.7 uF	20%, 25V, Sal	Ph,Ri
	C....27	59.06.0103	10 nF	10%	
	C....28	59.06.0474	470 nF	10%	
	C....29	59.26.0470	47 uF	20%, 6.3V, Sal	Ph,Ri
	C....30	59.06.5105	1 uF	5%	
	C....31		not used		
	C....32	59.06.5102	1 nF	10%	
	C....33	59.05.1332	3.3 nF	1%	
	C....34	59.26.1220	22 uF	20%, 10V, Sal	Ph,Ri
	C....35		not used		
	C....36	59.06.0332	3.3 nF	10%	
	C....37	59.06.0473	47 nF	10%	

IND.	POS.NO.	PART NO.	VALUE	SPECIFICATIONS / EQUIVALENT	MANUF.
	C....38	59.05.1102	1 nF	1%	
	C....39	59.06.0472	4.7 nF	10%	
	C....40	59.32.2471	470 pF	10%	
	C....41	59.34.4151	150 pF	5%, Cer	
	C....42	59.06.0472	4.7 nF	10%	
	C....43	59.05.1103	10 nF	1%	
	C....44	59.32.2681	680 pF	10%, Cer	
	C....45	59.06.0474	470 nF	10%	
	C....46	59.06.0683	68 nF	10%	
	C....48	59.06.0473	47 nF	10%	
	C....49	59.06.0472	4.7 nF	10%	
	C....50	59.26.5479	4.7 uF	20%, 25V, Sal	Ph,Ri
	C....51		not used		
	C....52	59.26.1100	10 uF	20%, 10V, Sal	Ph,Ri
	C....53	59.06.5105	1 uF	5%	
	C....54	59.06.0104	100 nF	10%	
	C....55	59.26.1100	10 uF	20%, 10V, Sal	Ph,Ri
(00)	C....56	59.34.1100	10 pF	5%, Cer	
(01)	C....56	59.34.2470	47 pF	5%, Cer	
	C....57	59.60.0102	1 nF	5%, Cer, Chip	
	D....1	50.04.0122	1N4001	1N4002, 1N4003, 1N4004	Mot,GI,Sol
	D....2	50.04.0125	1N4448		Fc,ITT,Ph,Ses
	D....3	50.04.0122	1N4001	1N4002, 1N4003, 1N4004	Mot,GI,Sol
	D....4	50.04.0125	1N4448		Fc,ITT,Ph,Ses
	D....5	50.04.0125	1N4448		Fc,ITT,Ph,Ses
	D....6		not used		
	D....7	50.04.0127	BAT 85	BAS 40-02	Ph,Sie
	D....8	50.04.0125	1N4448		Fc,ITT,Ph,Ses
	D....9	50.04.0127	BAT 85	BAS 40-02	Ph,Sie
	D....10	50.04.0125	1N4448		Fc,ITT,Ph,Ses
	D....12	50.04.1103	7.5 V Z	BZX83C 7V5, BZX55C 7V5, ZPD 7.5	Sew,ITT
	D....13	50.04.1103	7.5 V Z	BZX83C 7V5, BZX55C 7V5, ZPD 7.5	Sew,ITT
	D....14	50.04.0125	1N4448		Fc,ITT,Ph,Ses
	D....15	50.04.0125	1N4448		Fc,ITT,Ph,Ses
	D....16	50.04.0125	1N4448		Fc,ITT,Ph,Ses
	D....17	50.04.0125	1N4448		Fc,ITT,Ph,Ses

IND.	POS.NO.	PART NO.	VALUE	SPECIFICATIONS / EQUIVALENT	MANUF.
	D....18	50.04.1102	6.8 V Z	BZX83C 6V8, BZX55C 6V8, ZPD 6.8	Sew,ITT
	D....19	50.04.0512	1N5818	1N5819	Mot
	D....20	50.04.0512	1N5818	1N5819	Mot
	D....21	50.04.0125	1N4448		Fc,ITT,Ph,Ses
	D....22	50.04.0125	1N4448		Fc,ITT,Ph,Ses
	D....23	50.04.0127	BAT 85	BAS 40-02	Ph,Sie
	D....24	50.04.0127	BAT 85	BAS 40-02	Ph,Sie
	D....25	50.04.0127	BAT 85	BAS 40-02	Ph,Sie
	D....26	50.04.0127	BAT 85	BAS 40-02	Ph,Sie
	D....27	50.04.0127	BAT 85	BAS 40-02	Ph,Sie
	D....28	50.04.0127	BAT 85	BAS 40-02	Ph,Sie
	D....29	50.04.0127	BAT 85	BAS 40-02	Ph,Sie
	D....30	50.04.0127	BAT 85	BAS 40-02	Ph,Sie
	D....31	50.04.1103	7.5 V Z	BZX83C 7V5, BZX55C 7V5, ZPD 7.5	Sew,ITT
	IC....1	50.07.0003	MM74C374N		NSC
	IC....2		not used		
	IC....3	50.07.0004	MC14556BCP	C04556BL, 4556BPC	Fc,Mot,RCA
	IC....4	50.07.0015	MC14053B	C04053BCN	Mot,NSC
	IC....5	50.05.0227	SN75462P	SN75472P, SN75462JG	TI
	IC....6	50.05.0283	LM393N	LM393	NSC,TI
	IC....7	50.17.1132	MC74HC132	PC74HC132 MM74HC132	Mot,Ph,NS
	IC....8	50.06.0113	M74LS113N	M74LS113N, DM74LS113N	TI,Sig,NSC
	IC....9	50.09.0107	RC4559NB		Ra
	IC....10	50.05.0283	LM393N	LM393	NSC,TI
	IC....11	50.09.0110	LF357 A	Slew rate >40V/ius	NS
	IC....12	50.09.0110	LF357 A	Slew rate >40V/ius	NS
	IC....13	50.09.0110	LF357 A	Slew rate >40V/ius	NS
	IC....14	50.09.0110	LF357 A	Slew rate >40V/ius	NS
	IC....15	50.09.0106	NE5532AN	X85532AN, 5532ANB	Sig,Ex,Ra
	IC....16	50.09.0110	LF357 A	Slew rate >40V/ius	NS
	IC....17	50.09.0110	LF357 A	Slew rate >40V/ius	NS
	IC....18	50.17.1132	MC74HC132	PC74HC132 MM74HC132	Mot,Ph,NS
	JS....1			See Noti 1	
	JS....2			See Noti 1	

IND.	POS.NO.	PART NO.	VALUE	SPECIFICATIONS / EQUIVALENT	MANUF.
	K....1	56.04.0171	SM D1012		ITT
	K....2	56.04.0195	TQ2		
	L....1	62.02.2122	1.2 mH	TDK Nr. CSL 0812-122 J	
	L....2	62.01.0128	1 mH	Gowanda Nr. 17-104, Delevan Nr. 1641-105	
	Q....1	50.03.0496	BC560E		Sie
	Q....2	50.03.0436	BC237B	BC547B, BC550B	ITT,Mot,Ph,Sie
	Q....3	50.03.0351	BC327-25		ITT,Ph,Sie
	Q....4	50.03.0340	BC337-25		ITT,NS,Ph,Sie
	Q....5	50.03.0497	BC550E		Sie
	Q....6	50.03.0329	WP 146		Six
	Q....7	50.03.1305	VN 0808M	ZVN 010BA	Fe,Six
	Q....9	50.03.0350	J112F	J112, TM00062	Se,NS,Mot
	Q....10	50.03.0350	J112F	J112, TM00062	Se,NS,Mot
	Q....11	50.03.0329	WP 146		Six
	Q....12	50.03.1305	VN 0808M	ZVN 010BA	Fe,Six
	Q....13	50.03.0329	WP 146		Six
	Q....14	50.03.0329	WP 146		Six
	R....1	57.11.3101	100 Ohm	5%	
	R....2	58.11.6203	20 kOhm	See Note 2	
	R....3	57.11.3103	10 kOhm	2%	
	R....4	57.11.3562	5.6 kOhm	2%	
	R....5	57.11.3562	5.6 kOhm	2%	
	R....6	57.11.3331	330 Ohm	2%	
	R....7	57.11.3105	1 MOhm	2%	
	R....8	58.11.6203	20 kOhm	See Note 2	
	R....9	57.11.3101	100 Ohm	2%	
	R....10	58.11.6203	20 kOhm	See Note 2	
	R....11		not used		
	R....12		not used		
	R....13	57.11.3273	27 kOhm	5%	
	R....14	57.11.3124	120 kOhm	5%	
	R....15	58.11.6502	5 kOhm	See Note 3	
	R....16		not used		
	R....17		not used		

IND.	POS.NO.	PART NO.	VALUE	SPECIFICATIONS / EQUIVALENT	MANUF.
	R....18		not used		
	R....19		not used		
	R....20	57.11.3105	1 MOhm	2%	
	R....21	57.11.3105	1 MOhm	2%	
	R....22	57.11.3393	39 kOhm	2%	
	R....23	57.11.5335	3.3 MOhm	5%	
	R....24		not used		
	R....25		not used		
	R....26		not used		
	R....27	57.11.3103	10 kOhm	2%	
	R....28	57.11.3472	4.7 kOhm	1%	
	R....29	57.11.3102	1 kOhm	1%	
	R....30	57.99.0209	5.6 Ohm	PTC Resistor, Philips Nr. 2322 662 91005	
	R....31	57.11.3103	10 kOhm	2%	
	R....32	57.11.3104	100 kOhm	5%	
	R....33	57.11.3104	100 kOhm	2%	
	R....34	57.11.3152	1.5 kOhm	2%	
	R....35	57.11.3103	10 kOhm	2%	
	R....36	57.11.3105	1 MOhm	2%	
	R....37	57.11.3103	10 kOhm	2%	
	R....38	57.11.3472	4.7 kOhm	1%	
	R....39	57.11.3471	470 Ohm	2%	
	R....40	57.11.3152	1.5 kOhm	2%	
	R....41	57.11.3102	1 kOhm	2%	
	R....42	57.11.3104	100 kOhm	2%	
	R....43	57.11.3152	1.5 kOhm	2%	
	R....44	57.11.3683	68 kOhm	2%	
	R....45	57.11.3105	1 MOhm	2%	
	R....46	57.11.3103	10 kOhm	2%	
	R....47	57.11.3103	10 kOhm	2%	
	R....48	57.11.3392	3.9 kOhm	2%	
	R....49	57.11.3102	1 kOhm	2%	
	R....50	57.11.3103	10 kOhm	2%	
	R....51	57.11.3103	10 kOhm	2%	
	R....52	57.11.5106	10 MOhm	5%	
	R....53	57.11.3112	1.1 kOhm	1%	
	R....54	57.11.3392	3.9 kOhm	2%	

IND.	POS.NO.	PART NO.	VALUE	SPECIFICATIONS / EQUIVALENT	MANUF.
	R....55	57.11.3112	1.1 kOhm	1%	
	R....56	57.11.3202	2 kOhm	1%	
	R....57	57.11.3102	1 kOhm	1%	
	R....58	57.11.3152	1.5 kOhm	1%	
	R....59	57.11.3202	2 kOhm	1%	
	R....60	57.11.3104	100 kOhm	2%	
	R....61	57.11.3105	1 MOhm	2%	
	R....62	57.11.3152	1.5 kOhm	1%	
	R....63	57.11.5225	2.2 MOhm	5%	
	R....64	57.11.3102	1 kOhm	2%	
	R....65	57.11.3103	10 kOhm	2%	
	R....66	57.11.3102	1 kOhm	1%	
	R....67	57.11.3102	1 kOhm	1%	
	R....68		not used		
	R....69	57.11.3105	1 MOhm	2%	
	R....70	57.11.3105	1 MOhm	2%	
	R....71	57.11.3102	1 kOhm	2%	
	R....72	57.11.3221	220 Ohm	2%	
	R....73	57.11.3472	4.7 kOhm	5%	
	R....74	57.11.3681	680 Ohm	2%	
	R....75	57.11.3100	10 Ohm	2%	
	R....76	57.11.3105	1 MOhm	2%	
	R....78	57.11.3150	15 Ohm	2%	
	R....80		not used		
	R....81	57.11.3102	1 kOhm	2%	
	R....82	57.11.3151	150 Ohm	2%	
	R....83	57.11.5106	10 MOhm	5%	
	R....84	57.11.3103	10 kOhm	2%	
	R....85	57.11.3101	100 Ohm	2%	
	R....86	57.11.3104	100 kOhm	2%	
	R....87	57.11.3104	100 kOhm	2%	
	R....88	57.11.3101	100 Ohm	2%	
	R....89	57.11.3152	1.5 kOhm	2%	
	R....90	57.11.3103	10 kOhm	2%	
	R....91	57.11.3103	10 kOhm	2%	
	R....92	57.11.3102	1 kOhm	2%	
	R....93	57.11.3681	680 Ohm	2%	

IND.	POS.NO.	PART NO.	VALUE	SPECIFICATIONS / EQUIVALENT	MANUF.
	R....94	57.11.3102	1 kOhm	2%	
	R....95		not used		
	R....98	57.11.3105	1 MOhm	2%	
	R....99	57.11.5106	10 MOhm	5%	
	R....100	57.11.5106	10 MOhm	5%	
	R....101	57.11.5475	4.7 MOhm	5%	
	R....102	57.11.3101	100 Ohm	5%	
	R....103	57.11.5475	4.7 MOhm	5%	
	R....104	57.11.3472	4.7 kOhm	5%	
	R....105	57.11.3272	2.7 kOhm	5%	
	R....106	57.11.3270	27 Ohm	5%	
	R....107	57.11.3301	300 Ohm	2%	
	R....108	57.11.3132	1.3 kOhm	2%	
	T....1	1.022.218.00		Input Transformer 1:1	St
	T....2	1.022.215.00		Time Code Output Transformer	St
	T....3	1.022.221.00		Time Code HF Transformer	St

(01) 08.01.90 Optimized reading at high ambient temperature.

Note 1: Contact pin: Studer Nr. 54.01.0020
Berg Nr. 75 160-102-36
Philips Nr. 2422 025 89303
Bridge: Studer Nr. 54.01.0021
Connatel Nr. 313.1365.000 408
Philips Nr. 2422 024 88003

Note 2: Potentiometer, linear: Bourns Nr. 3329 H - 1 - 203
VRN Nr. 170 - 20k
Lesa Nr. 170 - 20k

Note 3: Potentiometer, linear: Bourns Nr. 3329 H - 1 - 502
VRN Nr. 170 - 5k
Lesa Nr. 170 - 5k

Cer=Ceramic, Sal=Solid Aluminum

MANUFACTURER: Ex=Exar, Fe=Fairchild, Fe=Ferranti,
GI=General Instruments, ITT=Intermetall,
Mot=Motorola, NS=National Semiconductors,
Ph=Philips, Ra=Raytheon, RCA=Radio Corp. of America,
Sew=Seeo=ex, Sie=Siemens, Sig=Signetics, St=Studer,
Six=Siliconix, TS=Teledyne Semiconductors,
Tf=Telefunken, TI=Texas Instruments

ORIG 89/11/03 (01) 90/01/08

TIME CODE READ/WRITE UNIT 1.820.838.00

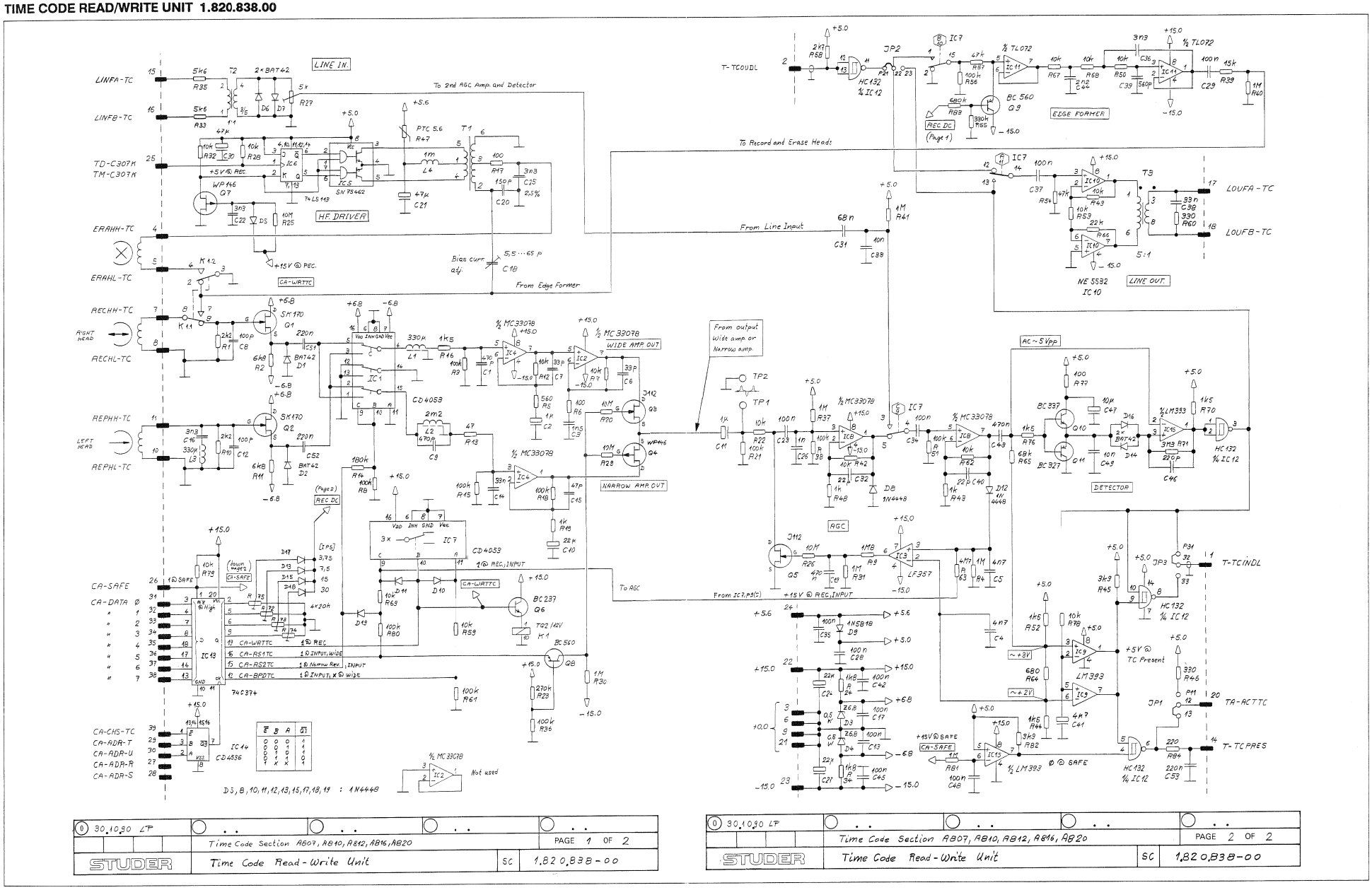

TIME CODE READ/WRITE UNIT 1.820.838.00

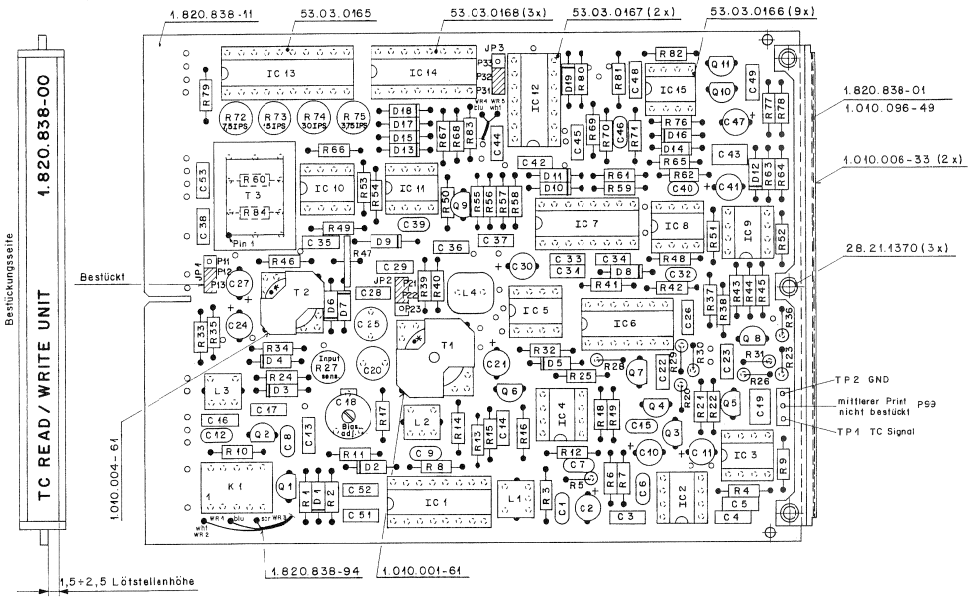

Ad	..POS..	...REF.No...	DESCRIPTION	MANUFACTURER
C	1	59.34.5471	470 pF 5% Cer	
C	2	59.22.8109	1 uF -20%, 50V, EL	Ph,Ri
C	3	59.06.0152	1.5 nF 10% PETP	
C	4	59.06.0472	4.7 nF 10% PETP	
C	5	59.06.0472	4.7 nF 10% PETP	
C	6	59.34.2330	33 pF 5% Cer	
C	7	59.34.2330	33 pF 5% Cer	
C	8	59.34.4101	100 pF 5% Cer	
C	9	59.34.5471	470 pF 5% Cer	
C	10	59.22.5220	22 uF -20%, 25V, EL	
C	11	59.22.8109	1 uF -20%, 50V, EL	Ph,Ri
C	12	59.34.4101	100 pF 5% Cer	
C	13	59.06.0104	100 nF 10% PETP	
C	14	59.06.0333	33 nF 10% PETP	
C	15	59.34.2470	47 pF 5% Cer	
C	16	59.06.0332	3.3 nF 10% PETP	
C	17	59.06.0104	100 nF 10% PETP	
C	18	59.18.0102	65 pF Trimmer Capacitor, Philips Nr 2222 808 01001	
C	19	59.06.0474	470 nF 10% PETP	
C	20	59.06.2151	150 pF 2.5% PP	
C	21	59.22.3470	47 uF -20%, 10V, EL	Ph,Ri
C	22	59.06.0332	3.3 nF 10% PETP	
C	23	59.06.0104	100 nF 10% PETP	
C	24	59.22.5220	22 uF -20%, 25V, EL	Ph,Ri
C	25	59.05.2332	3.3 nF 2.5% PP	
C	26	59.06.0102	1 nF 10% PETP	
C	27	59.22.5220	22 uF -20%, 25V, EL	Ph,Ri
C	28	59.06.0104	100 nF 10% PETP	
C	29	59.06.0104	100 nF 10% PETP	
C	30	59.22.3470	47 uF -20%, 10V, EL	Ph,Ri
C	31	59.06.0683	68 nF 10% PETP	
C	32	59.34.2220	22 pF 5%, 63V, Cer	
C	33	59.06.0103	10 nF 10% PETP	
C	34	59.06.0104	100 nF 10% PETP	
C	35	59.06.0104	100 nF 10% PETP	
C	36	59.06.0332	3.3 nF 10% PETP	
C	37	59.06.0104	100 nF 10% PETP	
C	38	59.06.0333	33 nF 10% PETP	
C	39	59.34.5561	560 pF 5%, 63V, Cer	
C	40	59.34.2220	22 pF 5%, 63V, Cer	
C	41	59.22.8479	4.7 uF -20%, 50V, EL	Ph,Ri
C	42	59.06.0104	100 nF 10% PETP	
C	43	59.06.0474	470 nF 10% PETP	
C	44	59.06.0222	2.2 nF 10% PETP	
C	45	59.06.0104	100 nF 10% PETP	
C	46	59.34.4221	220 pF 5%, Cer	
C	47	59.22.6100	10 uF -20%, 35V, EL	Ph,Ri
C	48	59.06.0104	100 nF 10% PETP	
C	49	59.06.0103	10 nF 10% PETP	
C	51	59.06.0224	220 nF 10% PETP	
C	52	59.06.0224	220 nF 10% PETP	
C	53	59.06.0224	220 nF 10% PETP	
D	1	50.04.0127	BAT 85 BAS 40-02	Ph,Sie
D	2	50.04.0127	BAT 85 BAS 40-02	Ph,Sie
D	3	50.04.1102	6.8 V Z BZX83C 6V8, BZX55C 6V8, ZPD 6.8	Ses,ITT
D	4	50.04.1102	6.8 V Z BZX83C 6V8, BZX55C 6V8, ZPD 6.8	Ses,ITT
D	5	50.04.0125	1N4448	Fc,ITT,Ph,Ses
D	6	50.04.0127	BAT 85 BAS 40-02	Ph,Sie
D	7	50.04.0127	BAT 85 BAS 40-02	Ph,Sie
D	8	50.04.0125	1N4448	Fc,ITT,Ph,Ses
D	9	50.04.0512	1N5818 1N5819	Mot
D	10	50.04.0125	1N4448	Fc,ITT,Ph,Ses
D	11	50.04.0125	1N4448	Fc,ITT,Ph,Ses
D	12	50.04.0125	1N4448	Fc,ITT,Ph,Ses
D	13	50.04.0125	1N4448	Fc,ITT,Ph,Ses
D	14	50.04.0127	BAT 85 BAS 40-02	Ph,Sie
D	15	50.04.0125	1N4448	Fc,ITT,Ph,Ses
D	16	50.04.0127	BAT 85 BAS 40-02	Ph,Sie
D	17	50.04.0125	1N4448	Fc,ITT,Ph,Ses
D	18	50.04.0125	1N4448	Fc,ITT,Ph,Ses
D	19	50.04.0125	1N4448	Fc,ITT,Ph,Ses
IC	1	50.07.0015	MC14053B CD4053BCN	Mot,NSC
IC	2	50.09.0117	MC33078 P	Mot
IC	3	50.09.0110	LF357 A Slew rate >40V/1us	NS
IC	4	50.09.0117	MC33078 P	Mot
IC	5	50.05.0227	SN75462P SN75462JG	TI
IC	6	50.06.0113	SN74LS113N N74LS113N, DM74LS113N	TI,Sig,NSC
IC	7	50.07.0015	MC14053B CD4053BCN	Mot,NSC
IC	8	50.09.0117	MC33078 P	Mot
IC	9	50.05.0283	LM393N LM393	NSC,TI
IC	10	50.09.0106	NE5532AN XR5532AN, 5532ANB	Sig,Ex,Ra
IC	11	50.09.0101	TL072 CP	TI
IC	12	50.17.1132	MC74HC132 PC74HC132 MM74HC132	Mot,Ph,NS
IC	13	50.07.0063	MM74C374N	NSC
IC	14	50.07.0004	MC14556BCP CD4556BE, 4556BPC	Fc,Mot,RCA
IC	15	50.05.0283	LM393N LM393	NSC,TI
JP	1	54.01.0021	Jumper Bridge	
JP	2	54.01.0021	Jumper Bridge	
JP	3	54.01.0021	Jumper Bridge	
K	1	56.04.0196	TQ2 12V	
L	1	62.01.0140	330 uH Shielded Coil	
L	2	62.01.0135	2.2 mH Shielded Coil	
L	3	62.01.0140	330 uH Shielded Coil	
L	4	62.02.3102	1 mH 10%	
P	11	54.01.0020	Connector 1 contact , .63*.63, H=5.8/3.4	
P	12	54.01.0020	Connector 1 contact , .63*.63, H=5.8/3.4	
P	13	54.01.0020	Connector 1 contact , .63*.63, H=5.8/3.4	
P	21	54.01.0020	Connector 1 contact , .63*.63, H=5.8/3.4	
P	22	54.01.0020	Connector 1 contact , .63*.63, H=5.8/3.4	
P	23	54.01.0020	Connector 1 contact , .63*.63, H=5.8/3.4	
P	31	54.01.0020	Connector 1 contact , .63*.63, H=5.8/3.4	
P	32	54.01.0020	Connector 1 contact , .63*.63, H=5.8/3.4	
P	33	54.01.0020	Connector 1 contact , .63*.63, H=5.8/3.4	
P	99	54.01.0020	Connector 1 contact , .63*.63, H=5.8/3.4	
Q	1	50.03.0215	2SK 170	
Q	2	50.03.0215	2SK 170	
Q	3	50.03.0350	J112F J112, TM00062	Sc,NS,Mot
Q	4	50.03.0329	WP 146	Six
Q	5	50.03.0350	J112F J112, TM00062	Sc,NS,Mot
Q	6	50.03.0436	BC237B BC547A, BC550B	ITT,Mot,Ph,Sie
Q	7	50.03.0329	WP 146	Six
Q	8	50.03.0496	BC560E	Sie
Q	9	50.03.0496	BC560E	Sie
Q	10	50.03.0340	BC337-25	ITT,NS,Ph,Sie
Q	11	50.03.0351	BC327-25	ITT,Ph,Sie
R	1	57.11.3222	2.2 kOhm 5%	
R	2	57.11.3682	6.8 kOhm 5%	
R	3	57.11.3104	100 kOhm 5%	
R	4	57.11.3105	1 MOhm 5%	
R	5	57.11.3561	560 Ohm 5%	
R	6	57.11.3101	100 Ohm 5%	
R	7	57.11.3103	10 kOhm 5%	
R	8	57.11.3104	100 kOhm 5%	
R	9	57.11.5185	1.8 MOhm 5%	
R	10	57.11.3222	2.2 kOhm 5%	
R	11	57.11.3682	6.8 kOhm 5%	
R	12	57.11.3103	10 kOhm 5%	
R	13	57.11.3470	47 Ohm 5%	
R	14	57.11.3184	180 kOhm 5%	
R	15	57.11.3104	100 kOhm 5%	
R	16	57.11.3152	1.5 kOhm 5%	
R	17	57.11.3101	100 Ohm 5%	
R	18	57.11.3104	100 kOhm 5%	
R	19	57.11.3102	1 kOhm 5%	
R	20	57.11.5106	10 MOhm 5%	
R	21	57.11.3104	100 kOhm 5%	
R	22	57.11.3103	10 kOhm 5%	
R	23	57.11.3274	270 kOhm 5%	
R	24	57.11.3182	1.8 kOhm 5%	
R	25	57.11.5106	10 MOhm 5%	
R	26	57.11.5106	10 MOhm 5%	
R	27	58.11.6502	5 kOhm See note 2	
R	28	57.11.3103	10 kOhm 5%	
R	29	57.11.5106	10 MOhm 5%	
R	30	57.11.3105	1 MOhm 5%	
R	31	57.11.3105	1 MOhm 5%	
R	32	57.11.3103	10 kOhm 5%	
R	33	57.11.3562	5.6 kOhm 5%	
R	34	57.11.3182	1.8 kOhm 5%	
R	35	57.11.3562	5.6 kOhm 5%	
R	36	57.11.3104	100 kOhm 5%	
R	37	57.11.3105	1 MOhm 5%	
R	38	57.11.3104	100 kOhm 5%	
R	39	57.11.3153	15 kOhm 5%	
R	40	57.11.3105	1 MOhm 5%	
R	41	57.11.3105	1 MOhm 5%	
R	42	57.11.3103	10 kOhm 5%	
R	43	57.11.3102	1 kOhm 5%	
R	44	57.11.3152	1.5 kOhm 5%	
R	45	57.11.3392	3.9 kOhm 5%	
R	46	57.11.3331	330 Ohm 5%	
R	47	57.99.0209	5.6 Ohm PTC Resistor, Philips Nr. 2322 662 91005	
R	48	57.11.3102	1 kOhm 5%	
R	49	57.11.3103	10 kOhm 5%	
R	50	57.11.3103	10 kOhm 5%	
R	51	57.11.3104	100 kOhm 5%	
R	52	57.11.3152	1.5 kOhm 5%	
R	53	57.11.3103	10 kOhm 5%	
R	54	57.11.3473	47 kOhm 5%	
R	55	57.11.3334	330 kOhm 5%	
R	56	57.11.3104	100 kOhm 5%	
R	57	57.11.3473	47 kOhm 5%	
R	58	57.11.3272	2.7 kOhm 5%	
R	59	57.11.3103	10 kOhm 5%	
R	60	57.11.3331	330 Ohm 5%	
R	61	57.11.3104	100 kOhm 5%	
R	62	57.11.3103	10 kOhm 5%	
R	63	57.11.5475	4.7 MOhm 5%	
R	64	57.11.3681	680 Ohm 5%	
R	65	57.11.3683	68 kOhm 5%	
R	66	57.11.3223	22 kOhm 5%	
R	67	57.11.3103	10 kOhm 5%	
R	68	57.11.3103	10 kOhm 5%	
R	69	57.11.3103	10 kOhm 5%	
R	70	57.11.3152	1.5 kOhm 5%	
R	71	57.11.5335	3.3 MOhm 5%	
R	72	58.11.6203	20 kOhm See note 1	
R	73	58.11.6203	20 kOhm See note 1	
R	74	58.11.6203	20 kOhm See note 1	
R	75	58.11.6203	20 kOhm See note 1	
R	76	57.11.3152	1.5 kOhm 5%	
R	77	57.11.3101	100 Ohm 5%	
R	78	57.11.3103	10 kOhm 5%	
R	79	57.11.3103	10 kOhm 5%	
R	80	57.11.3104	100 kOhm 5%	
R	81	57.11.3105	1 MOhm 5%	
R	82	57.11.3392	3.9 kOhm 5%	
R	83	57.11.3684	680 kOhm 5%	
R	84	57.11.3221	220 Ohm 5%	
T	1	1.022.221.00	Time Code HF Transformer	St
T	2	1.022.218.00	Input Transformer 1:1	St
T	3	1.022.322.00	Time Code Output Transformer 5:1	St
TP	1	54.01.0020	Connector 1 Contact , .63*.63, H=5.8/3.4	
TP	2	54.01.0020	Connector 1 Contact , .63*.63, H=5.8/3.4	

Note 1: Potentiometer, linear, Bourns Nr. 3329 H - 1 - 203
VRN Nr. 170 - 20k
Lesa Nr. 170 - 20k

Note 2: Potentiometer, linear, Bourns Nr. 3329 H - 1 - 502
VRN Nr. 170 - 5k
Lesa Nr. 170 - 5k

Cer=Ceramic, Sal=Solid Aluminum

MANUFACTURER: Ex=Exar, Fc=Fairchild, Fe=Ferranti,
Gl=General Instruments, ITT=Intermetall,
Mot=Motorola, NS=National Semiconductors,
Ph=Philips, Ra=Raytheon, RCA=Radio Corp. of America,
Ses=Sescosem, Sie=Siemens, Sig=Signetics, St=Studer,
Six=Siliconix, TS=Teledyne Semiconductors,
Tf=Telefunken, TI=Texas Instruments

1.820.838.00 TIME CODE READ/WRITE UNIT LP 90/10/1900

8 Spare Parts

8.1 Covers and Accessoires 8/1

8.2 Tape Deck Panels 8/2

8.3 Roller Assembly 8/6

8.4 Head Block 8/8

8.5 Adapter 8/14

8.6 Tape Tension Sensor 8/18

8.7 Capstan Motor 8/20

8.8 Spooling Motor 8/22

8.9 Shuttle Unit 8/26

8.10 Brake Chassis 8/28

8.11 Terminal Board 8/30

8.12 Overbridges 8/32

8.13.1 Console without Overbridge 8/34

8.13.2 Console with Overbridge 8/36

8.14 Labels 8/40

8.1 Covers and Accessoires

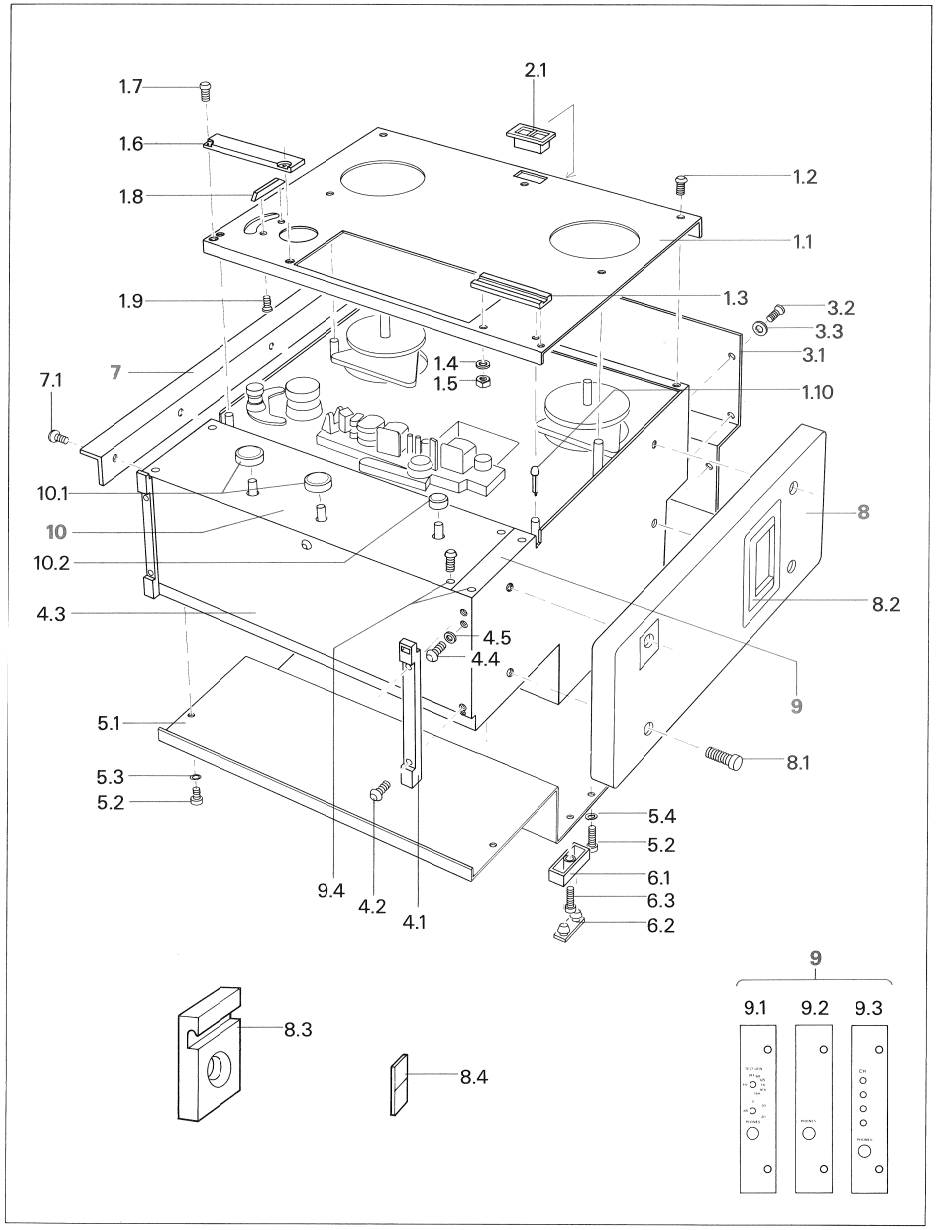

Pos	Qty	Order no.	Part name	Spezification
1.1		1.727.095.01	Tape transport cover with Monitor	
or		1.727.100.07	Tape transport cover with Monitor for ½" with serial number below 1081	
		1.727.096.01	Tape transport cover without Monitor	
		1.727.120.00	Monitor loudspeaker	compl.
1.2		21.51.8455	Oval head screw	IS M4x8
1.3		1.727.100.62	Splicing block	
or		1.727.600.08	Cover plate ½"	
1.4		24.16.1030	Lock washer ¼"	D3,2/5,5
1.5		22.01.8030	Hexanut	M3
1.6		1.727.100.37	Cover plate with splicing block ¼"	
or		1.727.600.07	Cover plate ½"	
1.7		1.010.010.21	Srew	IS M4x8spez.
1.8		1.811.090.20	Threading guide	
1.9		20.01.2153	Srew	D2, 9x6,5
1.10		1.077.100.20	Rubber cup	
2.1		55.12.0001	Power switch	
3.1		1.727.600.05	Top cover	
3.2		1.010.007.21	Srew	IS M4x8 SW
3.3		24.16.1040	Lock washer	D4,3/7
4.1		1.727.100.10	Feet	
4.2		1.010.007.21	Srew	IS M4x8
4.3		1.727.101.25	Bottom cover	
4.4		1.010.042.21	Srew	S M4x6
4.5		24.16.2040	Serrated washer	D4,3
5.1		1.727.101.03	Rear cover ¼"	
or		1.727.100.05	Rear cover ½"	
5.2		1.010.007.21	Srew	IS M4x8 SW
5.3		24.16.1040	Lock washer	D4,3/7
5.4		24.16.2040	Serrated washer	D4,3
6.1		1.177.930.08	Foot	
6.2		1.067.010.08	Foot insert grey	
6.3		21.53.0356	Z-Srew	IS M3x10
7.0		**1.727.071.00**	**19" Rack rail set**	**(option)**
7.1		21.51.2454	Srew	IS M4x6
8.0		**1.727.069.00**	**Set of wooden side panels**	**(option)**
8.1		21.53.0511	Z-Srew	IS M5x22
8.2		1.810.077.04	Handle	compl.
8.3		1.810.078.06	Camp for protective cover	(option)
		21.51.2514	Screw	M5x30
8.4		33.01.0106	Uni-Clip on protective cover	(option)
9.1		1.727.440.05	Cover plate testgenerator	
		1.727.440.06	Mounting braket for jack socket	
9.2		1.727.011.01	Jack socket cover plate (standard)	
		1.727.100.38	Mounting braket for jack socket	
9.3		1.727.600.26	Cover plate for 4-Channel-Version	
9.4		1.010.047.21	Screw	M4x8
10.0			**Frontpanel, Audio (according to different tape recorder Versions) See following pages for order numbers**	
10.1		1.727.100.43	Knob large	
10.2		1.727.100.33	Knob small, varispeed	

8.2 Tape Deck Panels

Standard & Playback only Versions

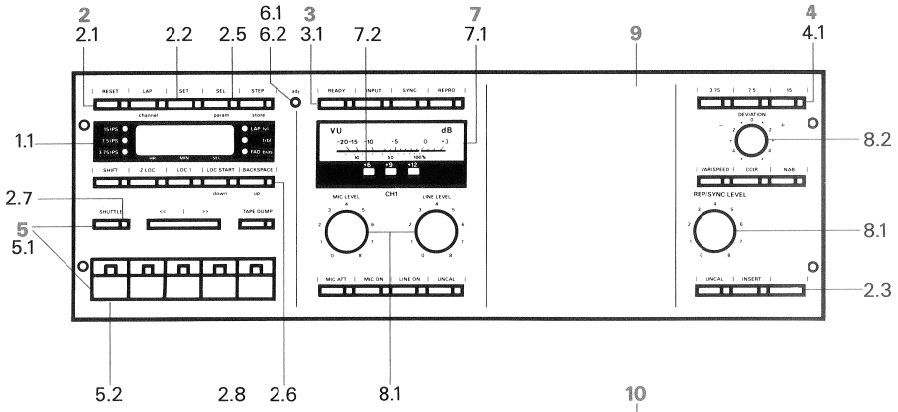

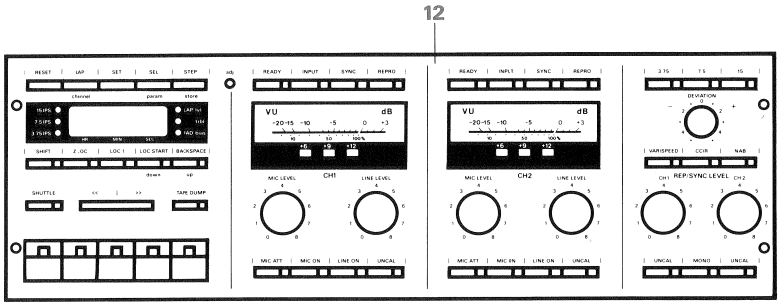

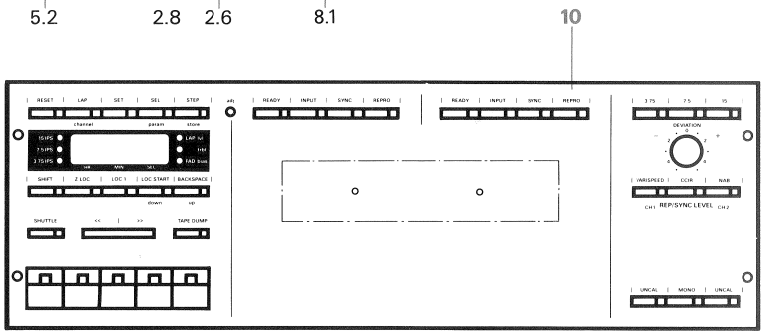

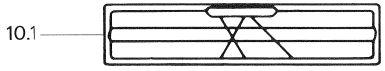

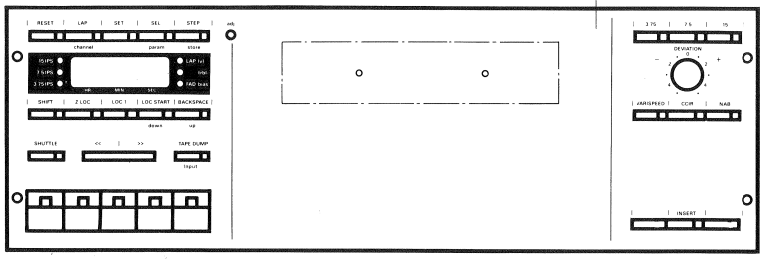

Repro only Versions

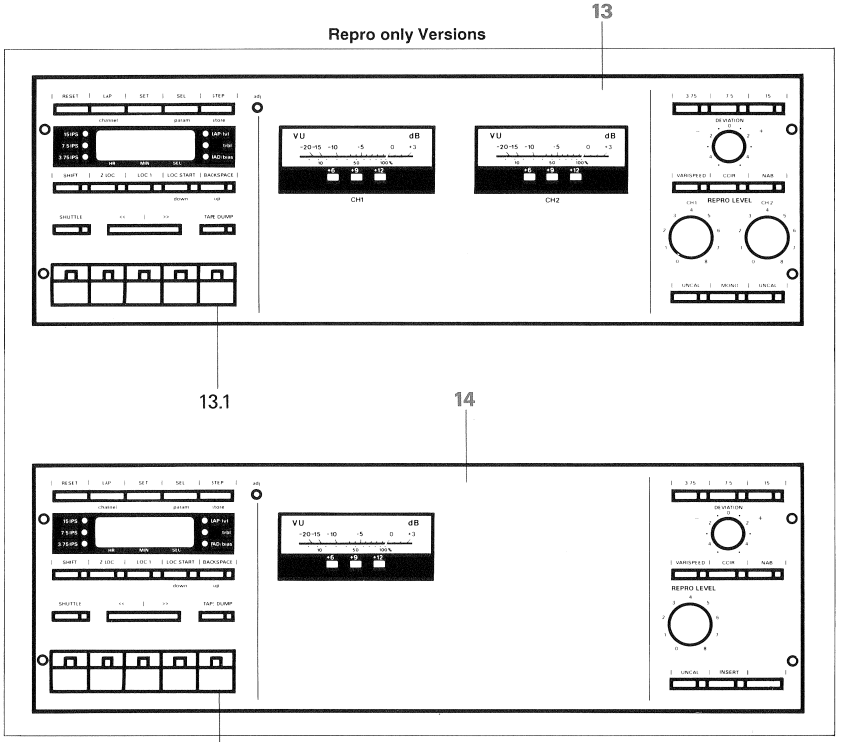

Tape Deck Panels

Pos	Qty	Order no.	Part name	Spezification
1.1		1.727.100.40	Display window 3,75...15 ips	
1.2		1.727.015.02	Display window 7.5...30 ips	
1.3		1.727.101.22	Display window 3,75...15 ips	TC
1.4		1.727.101.23	Display window 7,5...30 ips	TC
2		1.011.235.05	Push button housing for 5 buttons	
2.1		1.011.235.25	Switching rubber activator mat for 5 push buttons	
2.2		1.011.235.30	Push button	
2.3		1.011.235.35	Push button cover cap	
2.4		1.011.235.36	Push button cover cap,	short
2.5		1.011.235.31	Cover	
2.6		1.011.235.33	LED Cover, yellow	
2.7		1.011.235.34	LED Cover, green	
2.8		1.011.235.32	LED Cover, red	
2.9		1.011.235.29	bolt	
3		1.011.235.04	Push button housing for 4 buttons	
3.1		1.011.235.24	Switching rubber activator mat for 4 push buttons	
4		1.011.235.03	Push button housing for 3 buttons	
4.1		1.011.235.23	Switching rubber activator mat for 3 push buttons	
5		1.727.360.02	Push button housing	
5.1		1.727.360.03	Switching rubber activator mat	
5.2		1.727.360.04	Push button,	large
		20.010.001.00	Label set	
6.1		1.727.360.05	Extension piece for adjust ment key	
6.2		55.15.0130	Adjust push button switch	
7		1.727.360.01	VU meter	
7.1		51.02.0144	VU meter bulb	6V/0,03 Amp.
7.2		50.04.2119	Peak LED	
8.1		1.727.100.43	Knob,	large
8.2		1.727.100.33	Knob,	small
9		1.727.100.26	Frontcover panel for mono VU-Version	
10		1.727.100.23	Frontcover panel for 2/2 Version 3,75...15 ips	
		1.727.064.01	Frontcover panel for 2/2 Version 7,5...30 ips	
10.1		1.820.110.18	Splicing block ¼"	(option)
		1.820.110.12	Splicing block ½"	
11		1.727.100.25	Frontcover panel for VUK and non VU-Versions 3,75...15 ips	
		1.727.015.01	Frontcover panel for VUK and non VU-Versions 7,5...30 ips	
12		1.727.100.24	Frontcover panel for 2VU-Version 3,75...15 ips	
		1.727.064.01	Frontcover panel for 2VU-Version 7,5...30 ips	
13		1.727.100.27	Frontcover panel for playback only Version	
13.1		1.727.364.02	Label blank	
14		1.727.100.29	Frontcover panel for playback only, Mono Version	

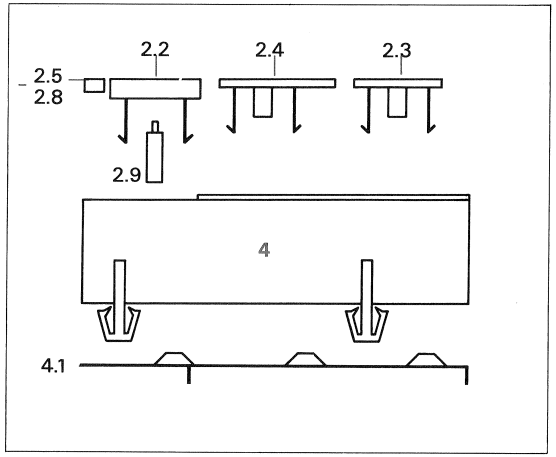

Tape Deck Panels

2-Channel Panels with Time code

1.3

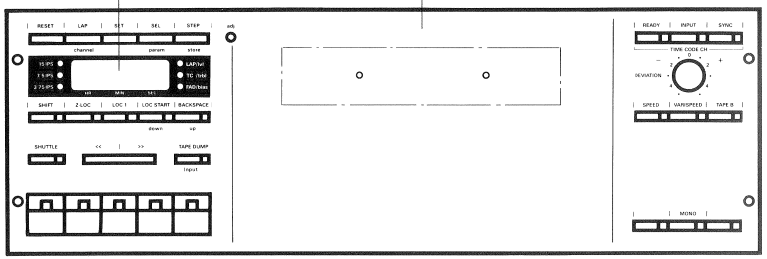

15

1.4

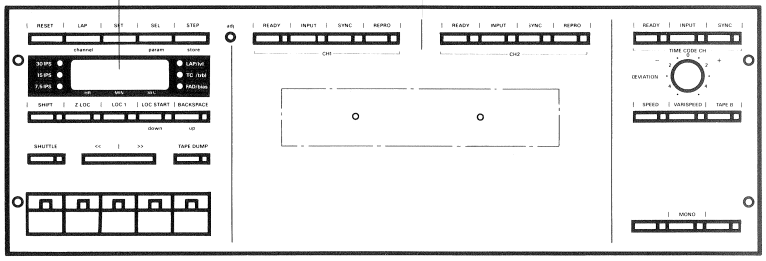

16

17

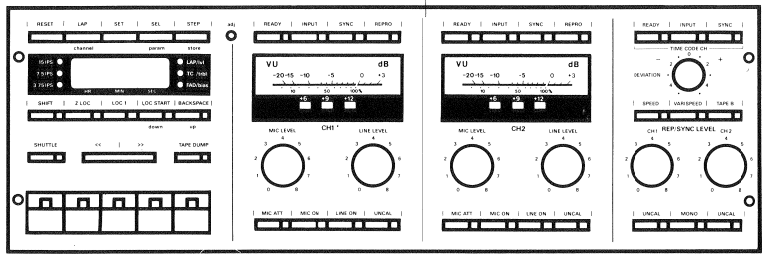

4-Channel Panels

18

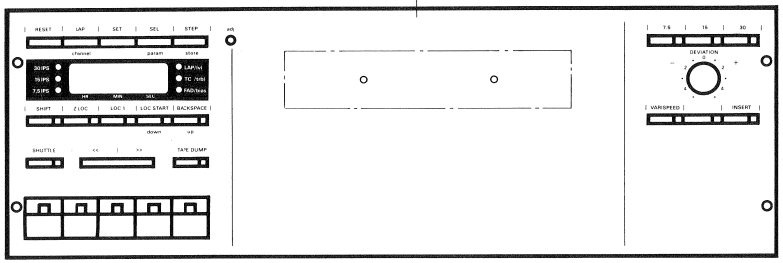

1.2

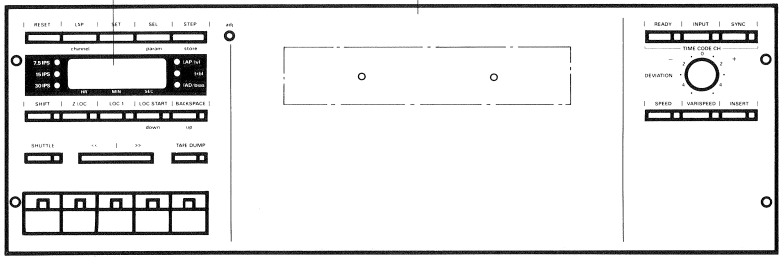

19

Tape Deck Panels

Pos	Qty	Order no.	Part name Spezification
15		1.727.101.05	Front cover panel for 2CH-VUK-TC-Version
16		1.727.101.21	Front cover panel for 2CH-TC-Version
17		1.727.101.04	Front cover panel for 2CH-VU-TC-Version
18		1.727.600.25	Front cover panel for 4CH VUK-Version
19		1.727.600.33	Front cover panel for 4CH VUK-TC-Version

8.3 Roller Assembly

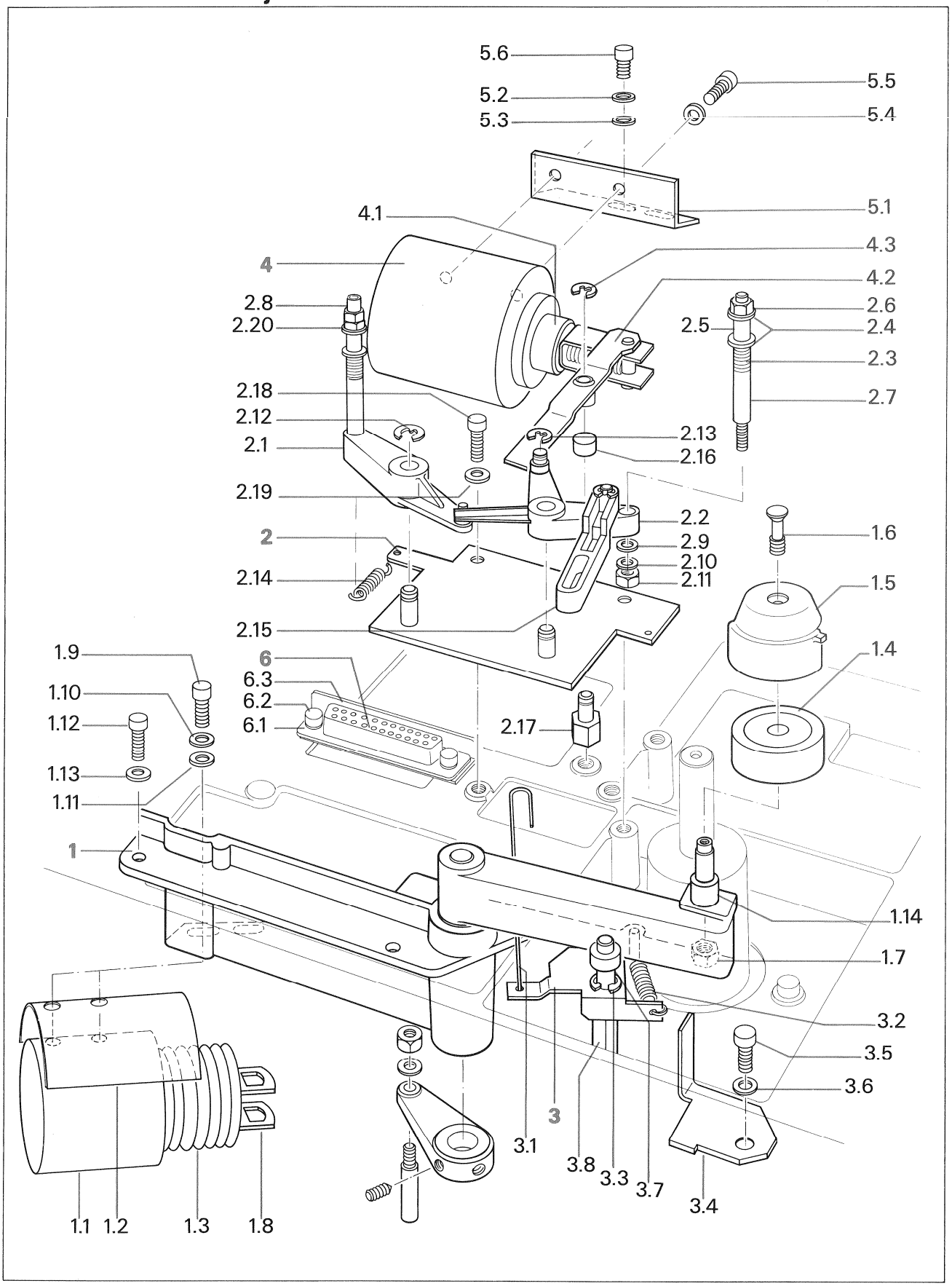

Roller Assembly

Pos	Qty	Order no..	Part name	Spezification
1		**1.727.135.81**	**Pressure aggregat ¼"**	**compl.**
		1.727.645.00	**Pressure aggregat ½"**	**compl.**
1.1		1.014.718.00	Solenoid	
1.2		1.810.100.09	Shield	
1.3		1.810.100.08	Damping rubber	
1.4		1.167.178.82	Pinch roller ¼"	
		1.777.129.81	Pinch roller ½"	
1.5		1.727.136.00	Pressure roller cover ¼"	compl.
		1.727.646.00	Pressure roller cover ½"	compl.
1.6		1.010.048.21	S–Srew	IS
1.7		22.01.5040	Hex nut	M4x0,5
1.8		1.810.101.00	Plunger	compol.
1.9		21.53.0455	Srew IS,	ZN M4x8
1.10		24.16.1040	Lock washer	D4,3/7
1.11		23.01.2043	Washer	D4,3/9x0,8
1.12		21.53.0456	Srew IS,	ZN M4x10
1.13		24.16.1040	Lock washer	D4,3/7
1.14		1.727.135.01	Pressure roller shaft ¼"	
		1.727.645.01	Pressure roller shaft ½"	
2		**1.727.115.00**	**Tape lifting ¼"**	**compl.**
		1.727.625.00	**Tape lifting ½"**	**compl.**
2.1		1.810.133.00	Lifter lever left	compl.
2.2		1.810.132.00	Lifter lever right	compl.
2.3		1.020.820.12	Pressure spring	
2.4		1.810.130.13	Guide washer	
2.5		1.810.130.09	Guide bushing ¼"	
		1.727.625.01	Guide bushing ½"	
2.6		22.99.0112	Self locking nut	M3
2.7		1.810.130.10	Lifter bolt ¼"	
		1.727.625.02	Lifter bolt ½"	
2.8		1.727.115.02	Hex nut (¼)	
		1.727.625.04	Hex nut (½)	
2.9		23.01.1032	Washer	D3,2/6
2.10		24.16.1030	Lock washer	D3,2/5,5
2.11		22.01.5030	Hex nut	M3
2.12		24.16.3040	Circlip	D4
2.13		24.16.3019	Circlip	D1,9
2.14		1.020.250.21	Tension spring	
2.15		1.810.130.12	Connecting rod	
2.16		1.727.115.01	Roller	
2.17		1.810.090.10	Bold	
2.18		21.53.0353	Srew IS	ZN M3x5
2.19		24.16.1030	Lock washer	D3,2/5,5
2.20		22.15.8030	Hexanut	M3

3		**1.727.130.00**	**Limiter for Edit lever**	**compl.**
3.1		1.727.100.48	Stop pawl guiding rod	
3.2		1.077.100.13	Tension spring	
3.3		24.16.3040	Circlip	D4
3.4		1.727.100.59	Edit lever retainer	
3.5		21.53.0454	Srew IS	ZN M4x6
3.6		24.16.1040	Lock washer	D4,3/7
3.7		1.067.170.14	Rubber tube	
3.8		1.727.100.47	Bold	
4		**1.014.718.00**	**Tape lift solenoid**	**compl.**
4.1		1.810.136.00	Plunger	compl.
4.2		1.810.135.00	Lever	compl.
4.3		24.16.3032	Circlip	D3
5.1		1.810.090.09	Mounting bracket	
5.2		24.16.1040	Lock washer	D4,3/7
5.3		23.01.1043	Washer	D4,3/8
5.4		24.16.1040	Lock washer	D4,3/7
5.5		21.53.0453	Srew	M4x5
5.6		21.53.0455	Z Srew IS	M4x8
6		**1.727.211.81**	**Cable harness mono**	**compl.**
		1.727.209.81	**Cable harness 2CH**	**compl.**
		1.727.210.81	**Cable harness 2CH with 2. Repro head**	**compl.**
		1.727.212.81	**Cable harness 2CH PBO**	**compl.**
		1.727.213.81	**Cable harness MONO PBO**	**compl.**
		1.727.721.00	**Cable harness 2CH, TC**	**compl.**
		1.727.613.81	**Cable harness 4CH**	**compl.**
		1.727.722.00	**Cable harness 4CH, TC**	**compl.**
		54.02.0442	Chassis receptacle housing 25 pin,	
		54.02.0450	Crimp contakt for 0,22 mm2 wire	
		54.02.0454	Crimp contakt for 0,56 mm2 wire	
6.1		24.16.1030	Lock washer	D3,2/5,5
6.2		21.51.8354	Srew LS IS	M3x6
6.3		1.727.209.07	Cable harness tie on bracket	
		1.727.209.08	Cable harness tie on bracket for 4CH and TC–Version	

8.4 Head Block

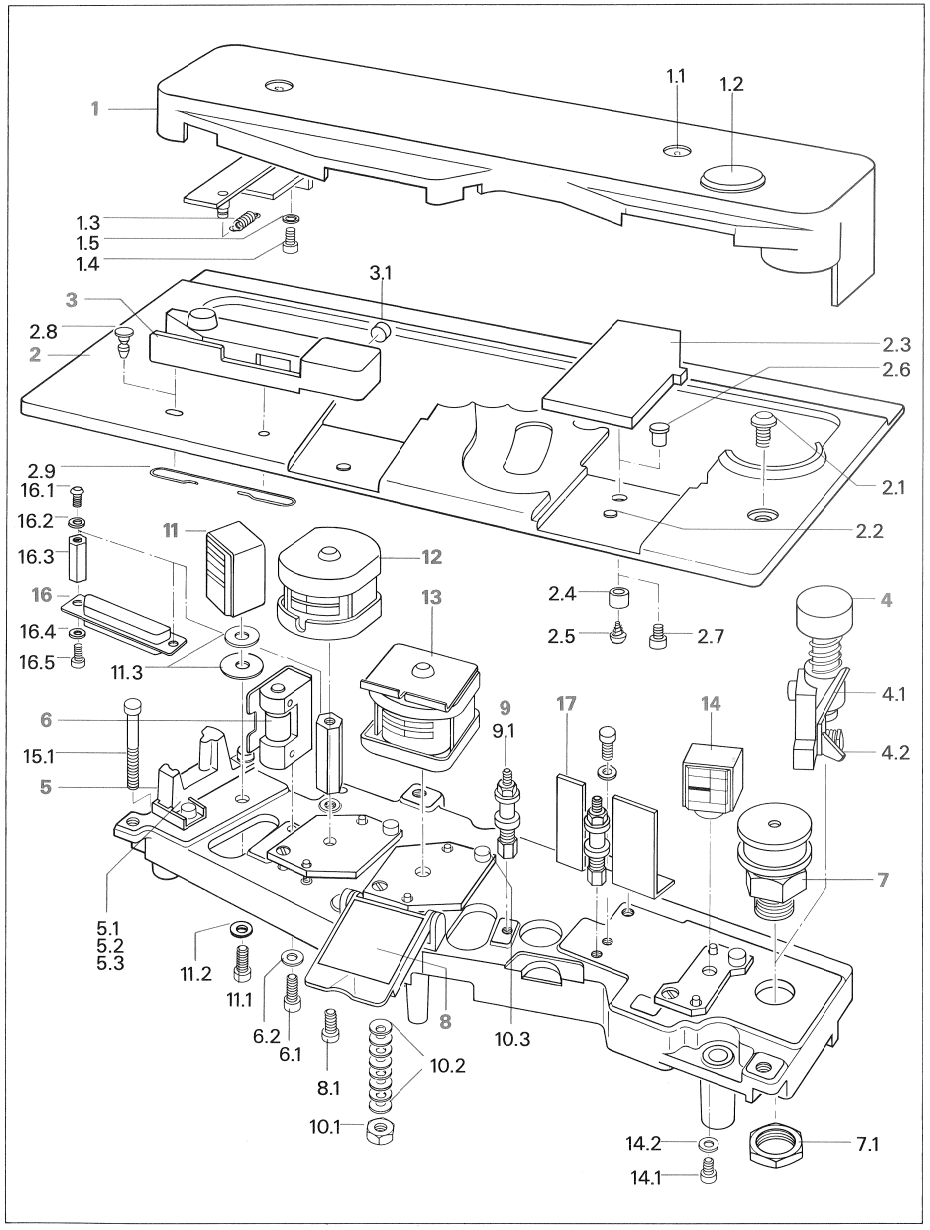

Head block

Pos	QTY	Order Nr.	Part name	Spezification
1		1.727.125.00	Head cover	compl.
or		1.727.073.00	Head cover with cut and splice rail	compl.
or		1.727.150.00	Head cover with azimuth alignment Knobs Rec/Repro	compl.
or		1.727.129.00	Head cover for TC-Version	compl.
or		1.727.076.00	Head cover for TC-Version with cut and splice rail	compl.
or		1.727.635.00	Head cover 4CH	compl.
1.1		1.010.036.21	S-Srew special	M4x14
1.2		1.727.125.04	Cover cap for scissors	
or		1.727.129.03	Cover cap for TC-Version	
1.3		1.010.025.37	Tension spring shape	B4x17
1.4		21.53.0354	Z-Srew	IS M3x6
1.5		24.16.1030	Lock washer	D3,2x5,5
2		1.727.126.00	Head block cover	compl.
or		1.727.128.00	Head block cover for TC-Version	compl.
2.1		1.010.011.21	Lens srew IS	
2.2		1.179.143.03	Rubber bumber for head cover	
2.3		1.727.126.02	Cover plate for 2. repro head	
or		1.727.128.03	Cover plate TC with scissors	
2.4		1.727.126.03	Socket	
2.5		20.23.7280	Srew	KS D2,5
or		1.727.128.02	Cover plate TC with scissors	
2.6		1.727.127.01	Srew socket	
2.7		21.53.0353	Z-Srew	IS M3x5
2.8		1.810.186.02	Stopper	
2.9		1.810.400.05	Spring	
3		1.810.402.82	Marker compl. (2CH)	(option)
3.1		1.337.958.05	Rubber insert with ink (2CH)	
4		1.020.889.82	Tape scissors compl. (2CH)	(option)
4.1		1.020.861.07	Scissor blade fixed	
4.2		1.020.715.12	Scissor blade movable	
5		1.050.314.00	Light barrier	compl.
5.1		21.53.0354	Z-Srew	IS M3x6
5.2		24.16.1030	Lock washer	D3,2/5,5
5.3		23.01.1032	Washer	D3,2x6
6		1.050.311.00	Anti-scrape flutter roller compl. ¼"	
or		1.050.355.00	Anti-scrape flutter roller compl. ½"	
6.1		21.53.0355	Z-Srew	IS M3x8
6.2		24.16.1030	Lock washer	D3,2/5,5
7		1.050.351.00	Tape guide roller compl. ¼"	
or		1.050.354.00	Tape guide roller compl. ½"	
7.1		1.050.351.04	Nut	
8		1.050.350.00	Headshield	compl.
8.1		21.53.0353	Z-Srew	IS M3x5

Head block

9 9.1		1.050.483.00 1.077.145.01	Tape guide pin compl. ¼" Sapphire Tape guide disc
10.1 10.2 10.3	8	22.01.8030 37.01.0101 1.020.710.05	Nut M3x0,8 Spring washer D4,3/7 M4x10 Head azimutment srew
11 11.1 11.2 11.3		 21.53.0456 24.16.1040 1.020.500.01	Erase head, variabel (see pos. 18) Srew M4x10 Lock washer D4,3/7 Sleeve spacer D4,2/15,5x0,1
12			Record head, variabel (see pos. 18)
13			Reproduce head, variabel (s. pos. 18)
14 14.1 14.2		 21.53.0353 24.16.1030	Timecode head, variabel (s. pos 18) Z-Srew IS M3x5 Lock washer D3,2x5,5
15.1		21.53.0464	Srew M4x30
16 16.1 16.2 16.3 16.4 16.5		54.13.1003 54.13.1128 21.51.8355 29.26.1022 24.16.1030 1.050.340.07 24.16.1020 21.01.0204	Connector (2CH) D-Type 25 pol Connector (4CH) D-Type 44 pol Srew IS M3x8 Soldering tab D3,25,5x10,5 Lock washer D3,2/5,5 Bold Lock washer D2,2x4 Z-Srew M2x6
17			Braket, variabel (see pos. 18)

Head block versions

Head block full track (mono)

Pos	QTY	Order no.	Part name	spezification
18		1.050.390.00	Head block	full track compl.
11		1.116.097.81	Erase head	full track
12		1.318.710.00	Record head	full track
13		1.318.616.00	Reproduce head	full track
17		1.050.390.01	Braket 56mm (standard)	
or		1.050.390.02	Braket 41mm for Version with scissors	

Pos	QTY	Order no.	Part name	spezification
18		1.050.381.00	Head block full track	repro only
11		1.116.089.01	Dummy erase head	
12		1.216.010.01	Dummy record head	
13		1.318.616.00	Reproduce head	full track
17		1.050.390.01	Braket 56mm (standard)	
or		1.050.390.02	Braket 41mm for Version with scissors	

Head block track 2mm

Pos	QTY	Order no.	Part name	spezification
18		1.050.391.00	Head block	2-track, 2 mm compl.
11		1.116.092.81	Erase head	2-track overlapping
12		1.318.720.00	Record head	2-track, 2mm
13		1.318.626.00	Reproduce head	2-track, 2mm
17		1.050.390.01	Braket 56mm (standard)	
or		1.050.390.02	Braket 41mm for Version with scissors	

Pos	QTY	Order no.	Part name	spezification
18		1.050.393.81	Head block 2-track with add. ¼-track 2-CH reproduce head	
11		1.116.092.81	Erase head	2-track overlapping
12		1.318.720.00	Record head	2-track 2mm
13		1.318.626.00	Reproduce head	2-track 2mm
14		1.318.629.81	Reproduce head	¼-track 2-CH
17		1.050.353.00	Tape guide pin (without tape guide elements)	
		1.050.340.05	Braket 36mm	
or		1.050.340.06	Braket 20mm for Version with scissors	

Head block versions

Head block track 2mm

Pos	QTY	Order no.	Part name	spezification
18		1.050.397.00	Head block	2-track 0,8 mm
11		1.116.814.00	Erase head	2-CH 0,8 mm
12		1.318.720.00	Record head	2-track 2mm
13		1.318.626.00	Reproduce head	2-track 2mm
17		1.050.390.01	Braket 56mm (standard)	
or		1.050.390.02	Braket 41mm for Version with scissors	

Pos	QTY	Order no.	Part name	spezification
18		1.050.395.00	Head block 2-track mono erase	
11		1.116.097.81	Erase head	full track
12		1.318.720.00	Record head	2-track 2mm
13		1.318.626.00	Reproduce head	2-track 2mm
17		1.050.390.01	Braket 56mm (standard)	
or		1.050.390.02	Braket 41mm for Version with scissors	

Pos	QTY	Order no.	Part name	spezification
18		1.050.398.00	Head block 2-track	repro only
11		1.116.089.01	Dummy erase head	
12		1.216.010.01	Dummy record head	
13		1.318.626.00	Reproduce head	2-track, 2mm
17		1.050.390.01	Braket 56mm (standard)	
or		1.050.390.02	Braket 41mm for Version with scissors	

Head block stereo 0,75mm

Pos	QTY	Order no.	Part name	spezification
18		1.050.392.00	Head block	2-track, 0,75 mm
11		1.116.092.81	Erase head	2-track overlapping
12		1.318.730.00	Record head	0,75 mm
13		1.318.636.00	Reproduce head	0,75 mm
17		1.050.390.01	Braket 56mm (standard)	
or		1.050.390.02	Braket 41mm for Version with scissors	

Head block versions

Head block stereo 0,75mm

Pos	QTY	Order no.	Part name	spezification
18		1.050.394.00	Head block 0,75 with Full track Erase head, compl.	
11		1.116.097.81	Erase head	full track
12		1.318.730.00	Record head	0,75 mm
13		1.318.636.00	Reproduce head	0,75 mm
17		1.050.390.01	Braket 56mm (standard)	
or		1.050.390.02	Braket 41mm for Version with scissors	

Pos	QTY	Order no.	Part name	spezification
18		1.050.396.81	Head block 0,75 with add. ¼-track 2-CH reproduce head	
11		1.116.092.81	Erase head	2-track overlapping
12		1.318.730.00	Record head	0,75 mm
13		1.318.636.00	Reproduce head	0,75 mm
14		1.318.629.81	Reproduce head	¼-track 2-CH
17		1.050.353.00	Tape guide pin (without tape guide elements	
		1.050.340.05	Braket 36mm	
or		1.050.340.06	Braket 20mm for verion with scissors	

Pos	QTY	Order no.	Part name	spezification
18		1.050.399.00	Head block 0,75	repro only
11		1.116.089.01	Dummy erase head	
12		1.216.010.01	Dummy record head	
13		1.318.636.00	Reproduce head	0,75 mm
17		1.050.390.01	Braket 56mm (standard)	
or		1.050.390.02	Braket 41mm for Version with scissors	

1/4 track 2CH 1/4"

Pos	QTY	Order no.	Part name	spezification
18		1.050.380.81	Head block	4-track 2-CH
11		1.116.099.00	Erase head	¼-track 2-CH
12		1.318.724.00	Record head	¼-track 2-CH
13		1.318.699.81	Reproduce head	¼-track 2-CH
17		1.050.390.01	Braket 56mm (standard)	
or		1.050.390.02	Braket 41mm for Version with scissors	

Head block versions

Pos	QTY	Order no.	Part name	spezification
18		1.050.382.00	2-CH Timecode 0,8 mm	
11		1.116.814.00	Erase head	2-CH 0,8 mm
12		1.318.720.00	Record head	2-track
13		1.318.626.00	Reproduce head	2-track
14		1.116.810.02	Combi head	(TC + TC Erase)
17		1.050.382.03	Braket 35 mm	

Head block 4CH ½"

Pos	QTY	Order no.	Part name	spezification
18		1.050.389.00	Head block	4-track 0,8 mm ½"
11		1.116.817.00	Erase head	4-track 0,8 mm
12		1.318.740.00	Record head	4-track ½"
13		1.318.645.00	Reproduce head	4-track ½"
17		1.050.389.05	Braket 56 mm ½"	

Head block 4CH TC ½"

Pos	QTY	Order no.	Part name	spezification
18		1.050.388.00	Head block 4-CH TC 0,8 mm	
11		1.116.817.00	Erase head 4-CH	
12		1.318.740.00	Record head	4-track ½"
13		1.318.645.00	Reproduce head	4-track ½"
14		1.116.816.00	Combi head	TC + TC Erase
17		1.050.388.01	Braket 35 mm ½"	

Head block 2CH ½"

Pos	QTY	Order no.	Part name	spezification
18		1.050.386.00	Head block 2-CH ½"	
11		1.116.098.05	Erase head	2-track ½"
12		1.318.700.00	Record head	2-track ½"
13		1.318.605.00	Reproduce head	2-track ½"
17		1.050.389.05	Braket 56 mm ½"	

Head block 2CH ½" TC

Pos	QTY	Order no.	Part name	spezification
18		1.050.387.00	Head block 2-CH TC ½"	
11		1.116.098.05	Erase head	2-track ½"
12		1.318.700.00	Record head	2-track ½"
13		1.318.605.00	Reproduce head	2-track ½"
14		1.116.816.00	Combi head	TC + TC Erase
17		1.050.388.01	Braket 35 mm ½"	

8.5 1/2"-Adapter

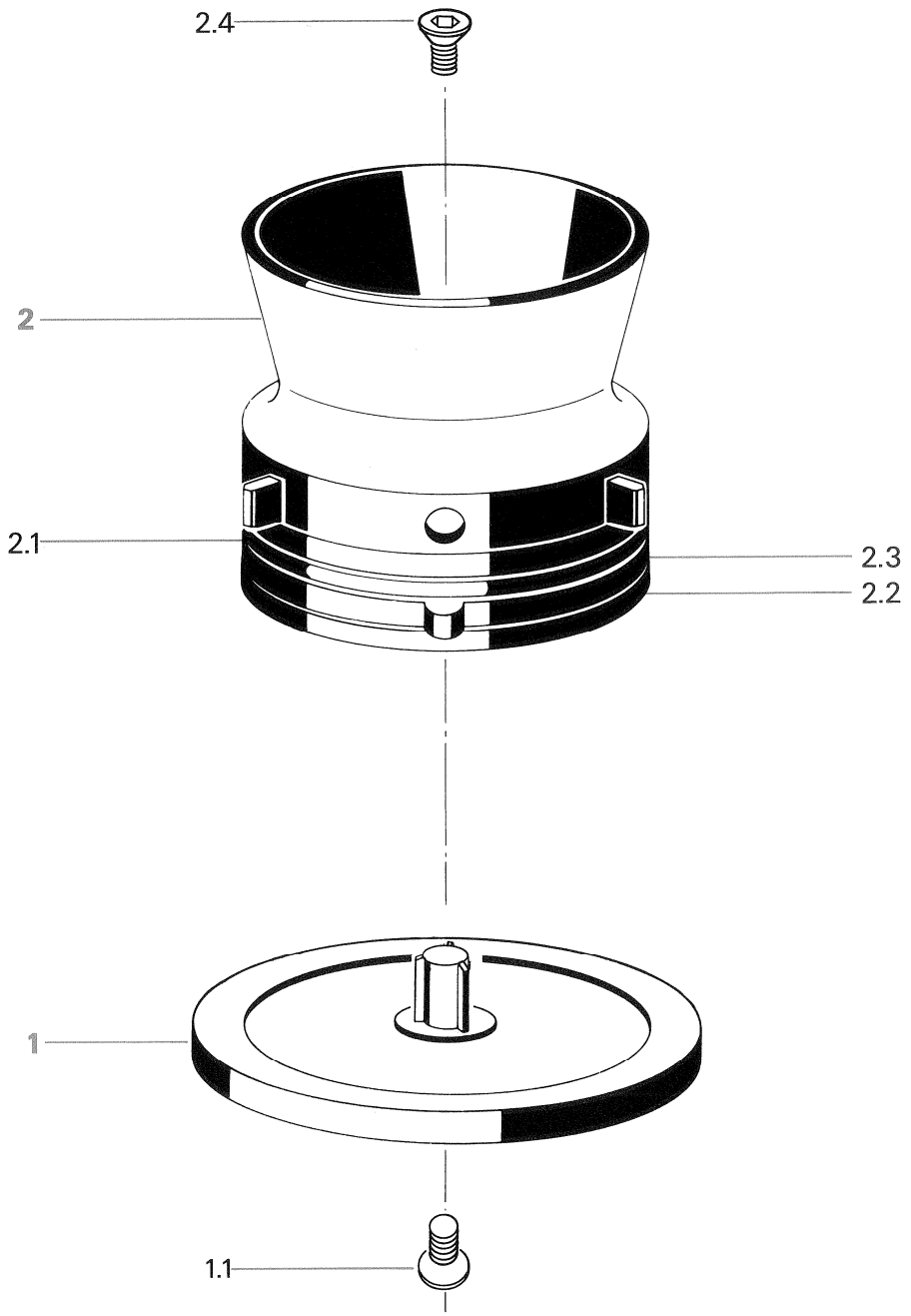

1/2"-Adapter

Pos	Qty	Order no..	Part name	Spezification
1		1.013.356.00	Spooling plate ½"	
1.1		21.51.2455	Screw	M4x8
2		1.013.355.00	NAB-Adapter ½"	
2.1		31.99.0123	Rubber ring	
2.2		1.013.355.02	Spacer disc	
2.3		1.013.344.03	NAB-Adapter	
2.4		21.51.2460	Screw	M4x20

1/4"-Adapter

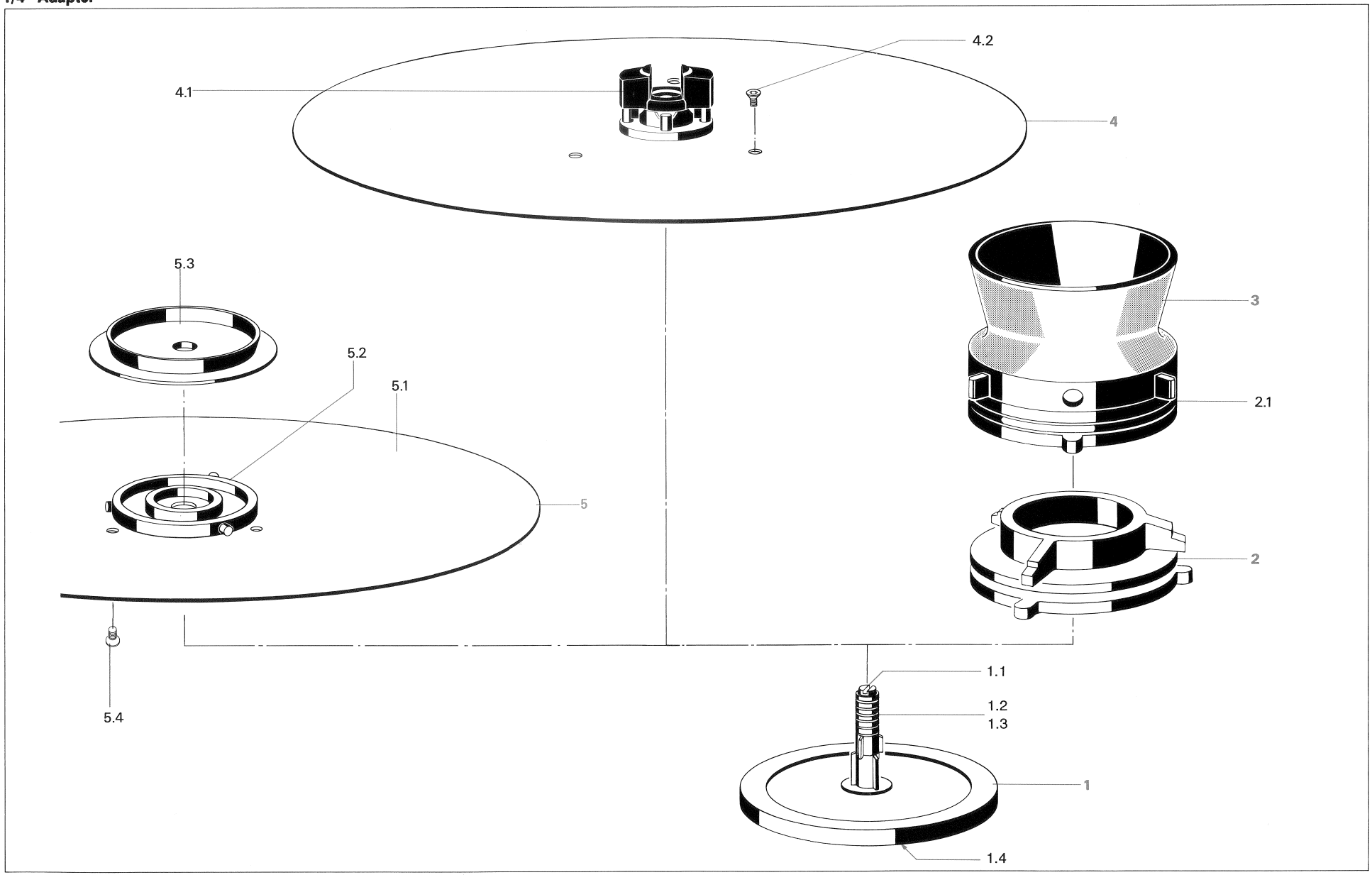

1/4"-Adapter

Pos	Qty	Order no.	Part name	Spezification
1		1.013.062.00	Spooling plate ¼"	
1.1		1.062.390.02	Screw Special	M3,5
1.2		1.067.688.01	3 prong guiding sleeve	
1.3		1.067.688.02	Spring	
1.4		21.51.2455	Screw	M4x8
2		89.01.0354	NAB-Adapter	
2.1		31.99.0123	Rubber ring	
3		1.013.331.00	NAB-Adapter with Handpiece	
4		1.013.047.81	DIN-Adapter	
4.1		1.013.042.81	Lock	compl.
		1.013.030.02	Circlip for Lock	
		21.01.2203	Screw	M2x5
4.2		21.51.2354	Screw	M3x6
5		1.013.257.00	NAB-Openreel adapter set	
5.1		1.013.257.01	NAB-Openreel plate	
5.2		1.013.257.03	NAB-Openreel adapter guide	
5.3		1.013.257.04	NAB-Openreel cover	
5.4		21.51.2354	Screw	M3x6

8.6 Tape Tension Sensor

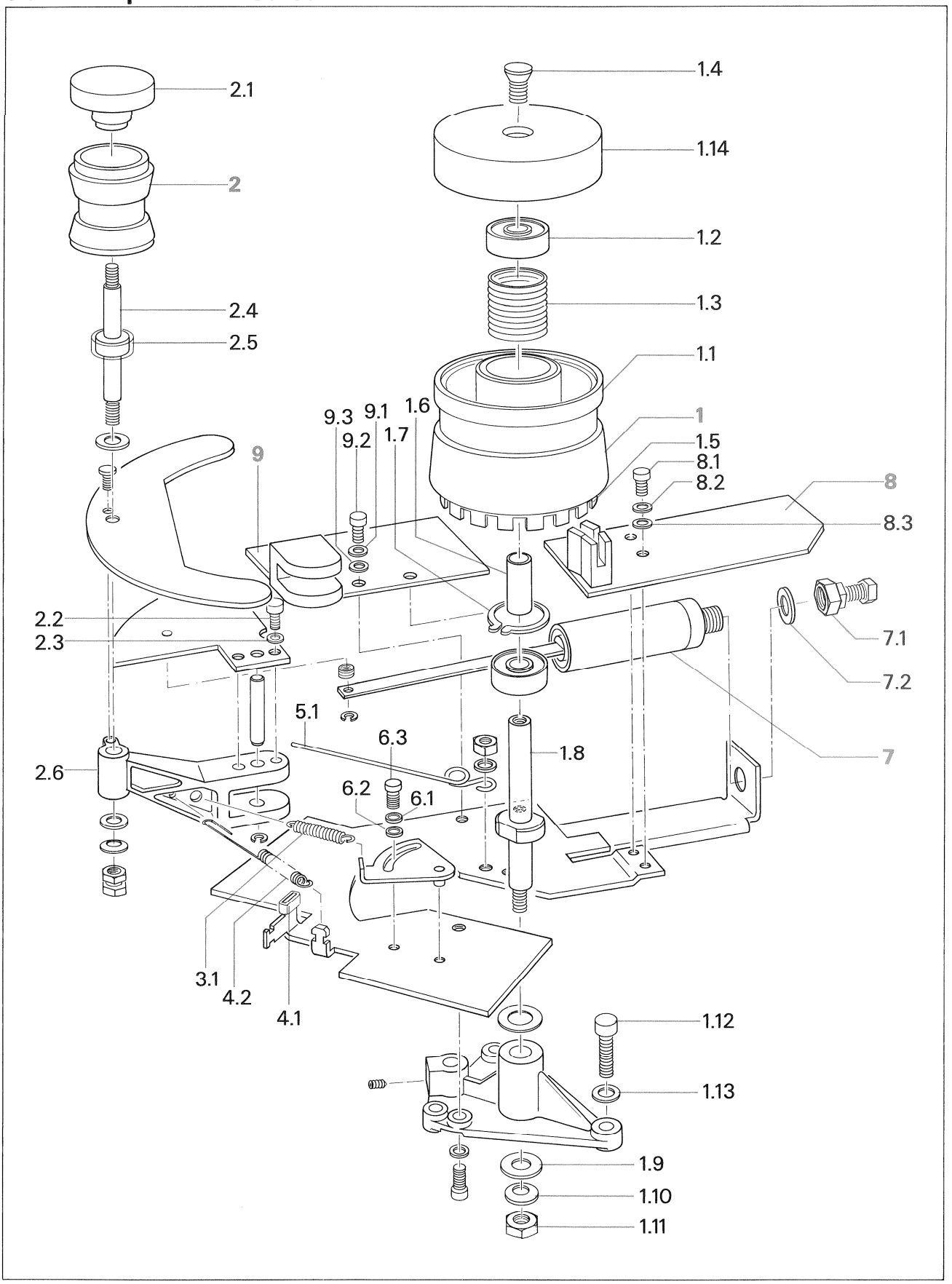

Tape Tension Sensor

Pos	Qty	Order no..	Part name	Spezification
		1.727.110.81	**Tape tension sensor (¼")**	**compl.**
		1.727.620.00	**Tape tension sensor (½")**	**compl.**
1		**1.727.112.81**	**Tacho roller ¼"**	**compl.**
		1.727.622.00	**Tacho roller ½"**	**compl.**
1.1		1.810.150.08	Tacho roller ¼"	
		1.727.622.02	Tacho roller ½"	
1.2		41.99.0106	Ball bearing	D5/16x6
1.3		1.010.091.37	Pressure spring	
1.4		21.51.2356	Srew IS	NI M3x10
1.5		1.810.150.01	Tacho mask	
1.6		1.167.838.02	Spacer	
1.7		24.16.4160	Internal retaining ring	D16
1.8		1.811.111.06	Shaft	
1.9		23.01.1064	Washer	D6,4x11
1.10		24.16.1060	Lock washer	D6,4x10
1.11		22.01.8060	Hexanut	M6
1.12		21.53.0357	Z–Srew IS	M3x12
1.13		24.16.1030	Lock washer	D3,2x5,5
1.14		1.810.150.03	Cover ¼"	
		1.727.622.01	Cover ½"	
2		**1.727.113.00**	**Guide roller ¼"**	**compl.**
		1.727.623.00	**Guide roller ½"**	**compl.**
2.1		1.167.831.00	Cover ¼"	
		1.727.621.00	Cover ½"	
2.2		21.01.0203	Z–Srew	M2x5
2.3		24.16.1020	Lock washer	D2,2x4
2.4		1.727.110.01	Shaft	
2.5		1.811.110.02	Stop rubber	
2.6		1.167.801.07	Tape tension arm	
3.1		1.010.032.37	Tension spring ¼"	short
		1.010.023.37	Tension spring ½"	short
4.1		1.067.170.14	Rubber tube	
4.2		1.010.125.37	Tension spring	long
5.1		1.727.110.03	Spring	
6.1		24.16.1030	Lock washer	D3,2x5,5
6.2		23.01.2032	Washer	D3,2x7
6.3		21.53.0353	Z–Srew IS	M3x5
7		**1.727.114.00**	**Dashpot compl.**	**adjusted**
7.1		22.01.5060	Nut	M6
7.2		37.02.0101	Spring washer	D6,2x9,8
8		**1.727.321.00**	**Move sensor BOARD**	**compl.**
8.1		21.53.0353	Z–Srew IS	M3x5
8.2		24.16.1030	Lock washer	D3,2x5,5
8.3		23.01.2032	Washer	D3,2x7
9		**1.727.320.00**	**Tape tension sensor BOARD**	**compl.**
9.1		24.16.1030	Lock washer	D3,2x5,5
9.2		21.53.0353	Z–Srew IS	M3x5
9.3		23.01.2032	Washer	D3,2x7

8.7 Capstan Motor

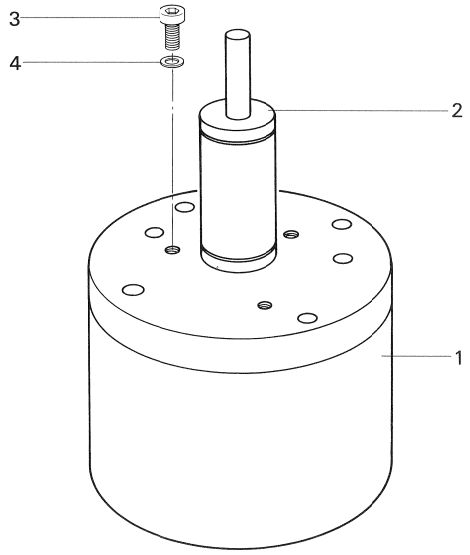

Capstan Motor 1/2"

Version 1

Pos	QTY	Order no.	Part name	spezification
1	1	1.021.609.00	Capstan motor 0,5" complete, equipped with sinter bearings, lubricated with PDP 65 oil.	
2	1	1.021.601.07	Bearing cover	
3	3	21.53.0457	Screw	M4x12
4	3	24.16.1040	Lockwasher	D4,3x7

Attention: Apply one drop of PDP 65 oil every six months.
(Order No. 20.020.401.04)
This motor Version is **not marked** with any sticker-label

Version 2

Pos	QTY	Order no.	Part name	spezification
1	1	1.021.609.81 1.021.609.82	Capstan motor 0,5" complete, equipped with sinter bearings, lubricated with grease "Constant GLY 2100"	
2	1	1.021.601.07	Bearing cover	
3	3	21.53.0457	Screw	M4x12
4	3	24.16.1040	Lockwasher	D4,3x7

Attention: Use grease "Klüber Constant GLY 2100 for lubrication only!
Apply a few drops (Order No. 20.020.401.10) once a year.
This Version of motor is marked with a **sticker-label**

Version 3

Pos	QTY	Order no.	Part name	spezification
1	1	1.021.641.00	Capstan motor 0,5" complete, equipped with ball bearings	
2	1	1.021.621.09	Bearing cover	
3	3	21.53.0457	Screw	M4x12
4	3	24.16.1040	Lockwasher	D4,3x7

Attention: This motor contains permanently lubricated ball bearings.
NOT APPLY OIL! Damage to the ball bearings may occur!
This Version of motor is marked with a **sticker-label**

Capstan Motor 1/4"

Version 1

Pos	QTY	Order no.	Part name	spezification
1	1	1.021.605.00 1.021.605.81 1.021.605.82	Capstan motor 0,25" complete, equipped with sinter bearings, lubricated with PDP 65 oil.	
2	1	1.021.601.07	Bearing cover	
3	3	21.53.0457	Screw	M4x12
4	3	24.16.1040	Lockwasher	D4,3x7

Attention: Apply one drop of PDP 65 oil every six months.
(Order No. 20.020.401.04)

This motor Version is **not marked** with any sticker-label

Version 2

Pos	QTY	Order no.	Part name	spezification
1	1	1.021.605.83 1.021.605.84	Capstan motor 0,25" complete, equipped with sinter bearings, lubricated with grease "Constant GLY 2100"	
2	1	1.021.601.07	Bearing cover	
3	3	21.53.0457	Screw	M4x12
4	3	24.16.1040	Lockwasher	D4,3x7

Attention: Use grease "Klüber Constant GLY 2100 for lubrication only!
Apply a few drops (Order No. 20.020.401.10) once a year.

This Version of motor is marked with a **sticker-label**

Version 3

Pos	QTY	Order no.	Part name	spezification
1	1	1.021.640.00	Capstan motor 0,25" complete, equipped with ball bearings	
2	1	1.021.621.09	Bearing cover	
3	3	21.53.0457	Screw	M4x12
4	3	24.16.1040	Lockwasher	D4,3x7

Attention: This motor contains permanently lubricated ball bearings.
NOT APPLY OIL! Damage to the ball bearings may occur!

This Version of motor is marked with a **sticker-label**

8.8 Spooling Motor for 1/2" Version with serial number below 1081

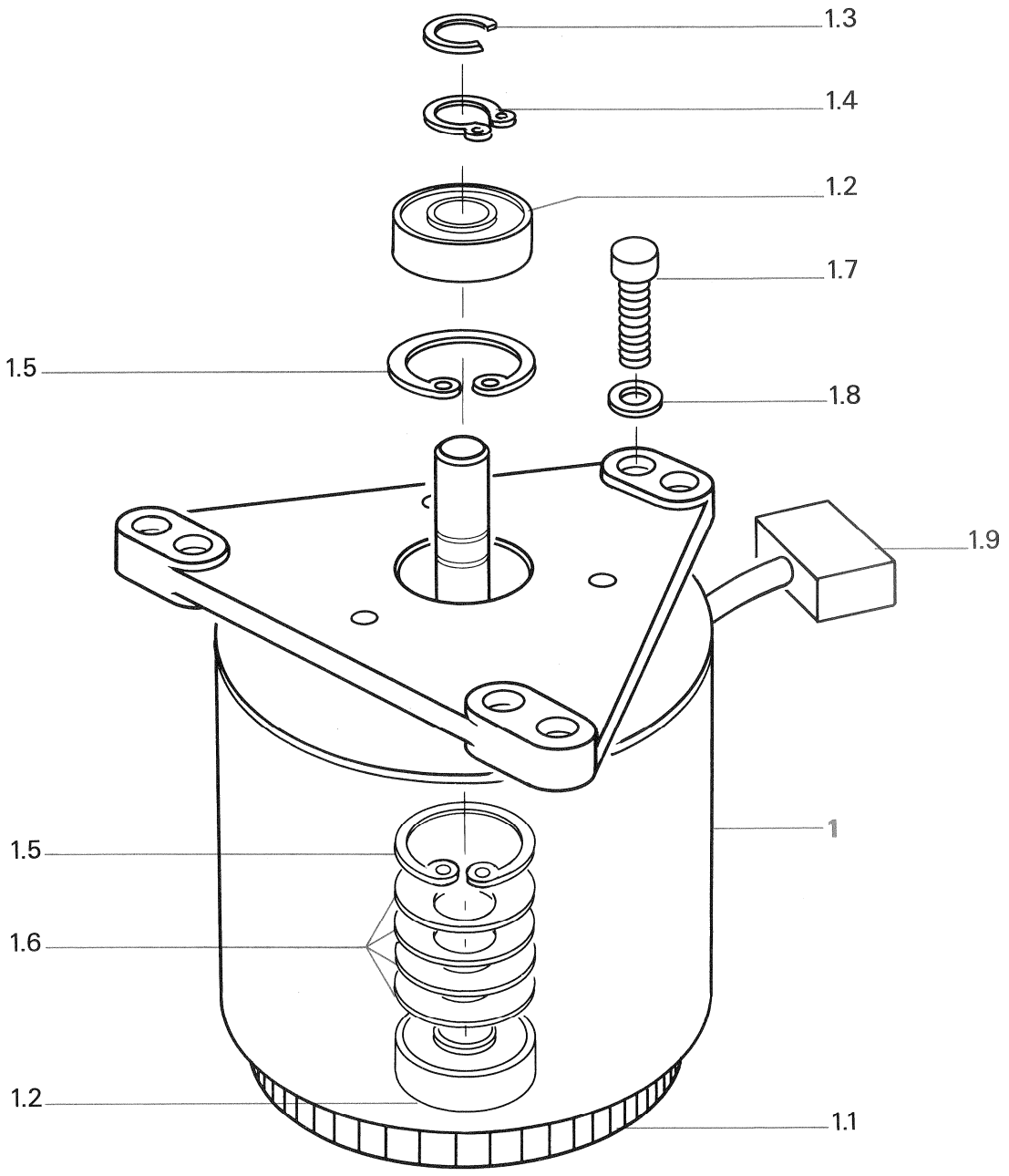

Spooling Motor for ½"–
Version with serial number below 1081

Pos	Qty	Order no.	Part name	Spezification
1		1.021.250.00	Spooling motor	compl.
1.1		1.777.100.40	Tacho ring	
1.2		41.99.0105	Ball bearing	
1.3		1.021.256.04	Circlip	
1.4		24.16.5080	Circlip	
1.5		24.16.4220	Circlip	
1.6		37.02.0206	Spring washer	
1.7		21.53.0457	7–Screw IS	M4x12
1.8		24.16.1040	Lock washer	
1.9		54.25.0303	Connector shell 3pol./16A	
		54.01.0207	Contact pin	

Spooling Motor

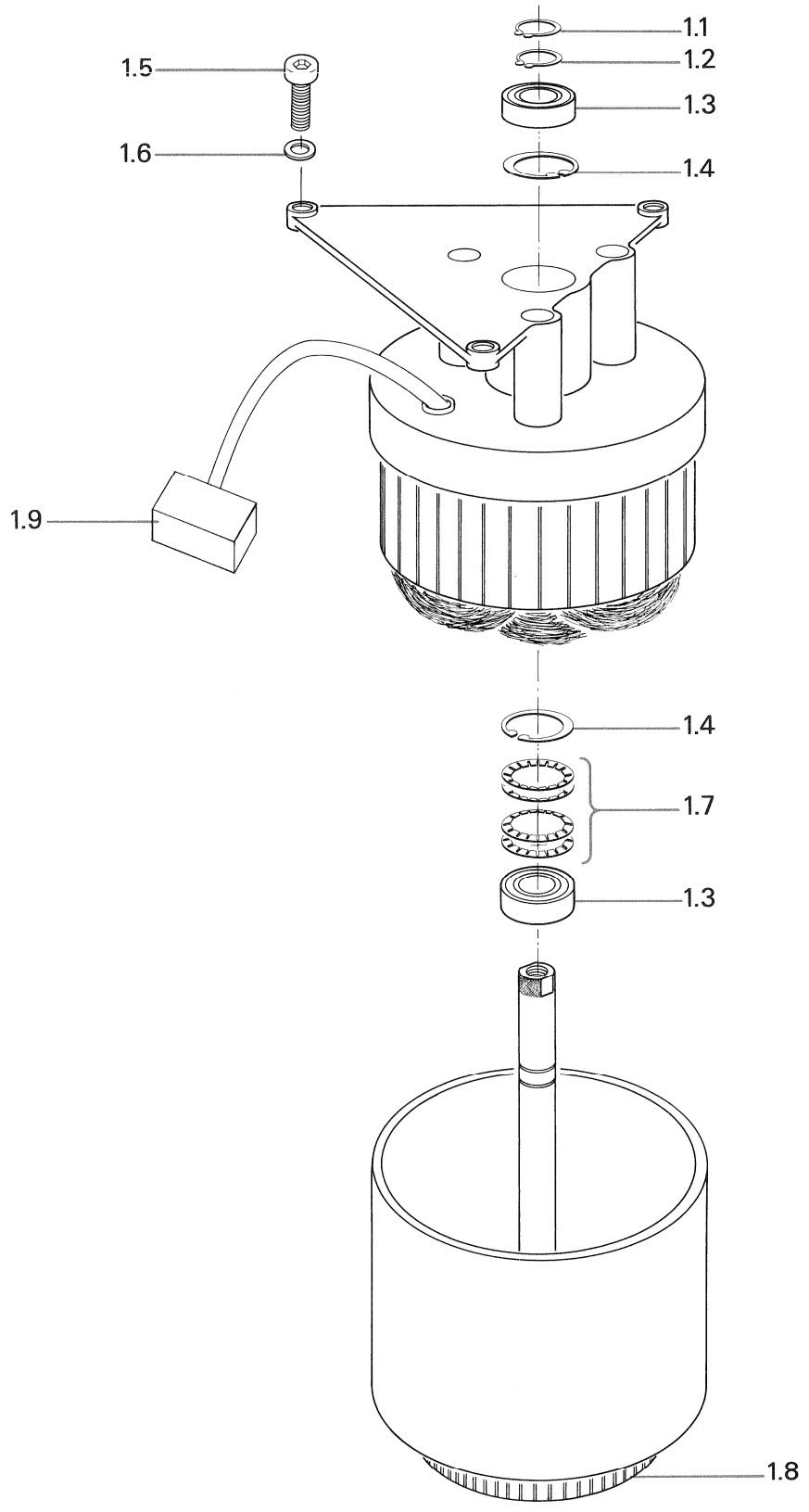

Spooling Motor

Pos	Qty	Order no.	Part name	Spezification
1		**1.021.260.81**	**Spooling motor**	**compl.**
1.1		1.021.256.04	Circlip polished	D8
1.2		24.16.5080	Circlip	D8
1.3		41.99.0105	Ball bearing	D8
1.4		24.16.4220	Circlip	D22
1.5		21.53.0457	Z-Screw 15	M4x12
1.6		24.16.1040	Lock washer	D4,3x7
1.7		37.02.0206	Spring washer	D12,5
1.8		1.777.100.40	Tacho ring	
1.9		54.25.0303	Connector, shell 3pol/16A	
		54.01.0207	Contact pin	

8.9 Shuttle unit

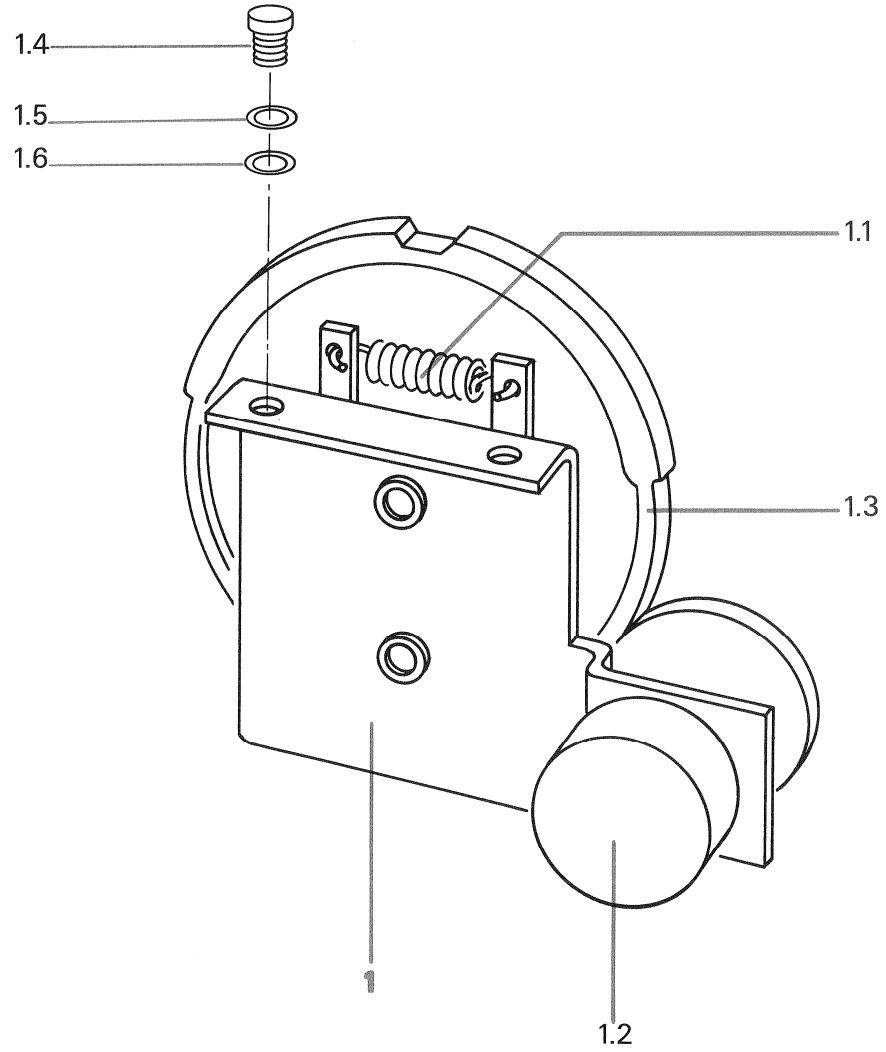

Shuttle unit

Pos	Qty	Order no.	Part name	Spezification
1		**1.727.180.00**	**Shuttle unit**	**compl.**
1.1		1.010.101.37	Tension spring	
1.2		58.99.0139	Shuttle potentiometer 5	KΩ/2W
1.3		1.727.180.01	Shuttle wheel	
1.4		21.53.0354	Z-Srew IS	M3x6
1.5		24.16.1030	Lock washer	D3,2/5,5
1.6		23.01.2032	Washer	D3,2

8.10 Brake Chassis

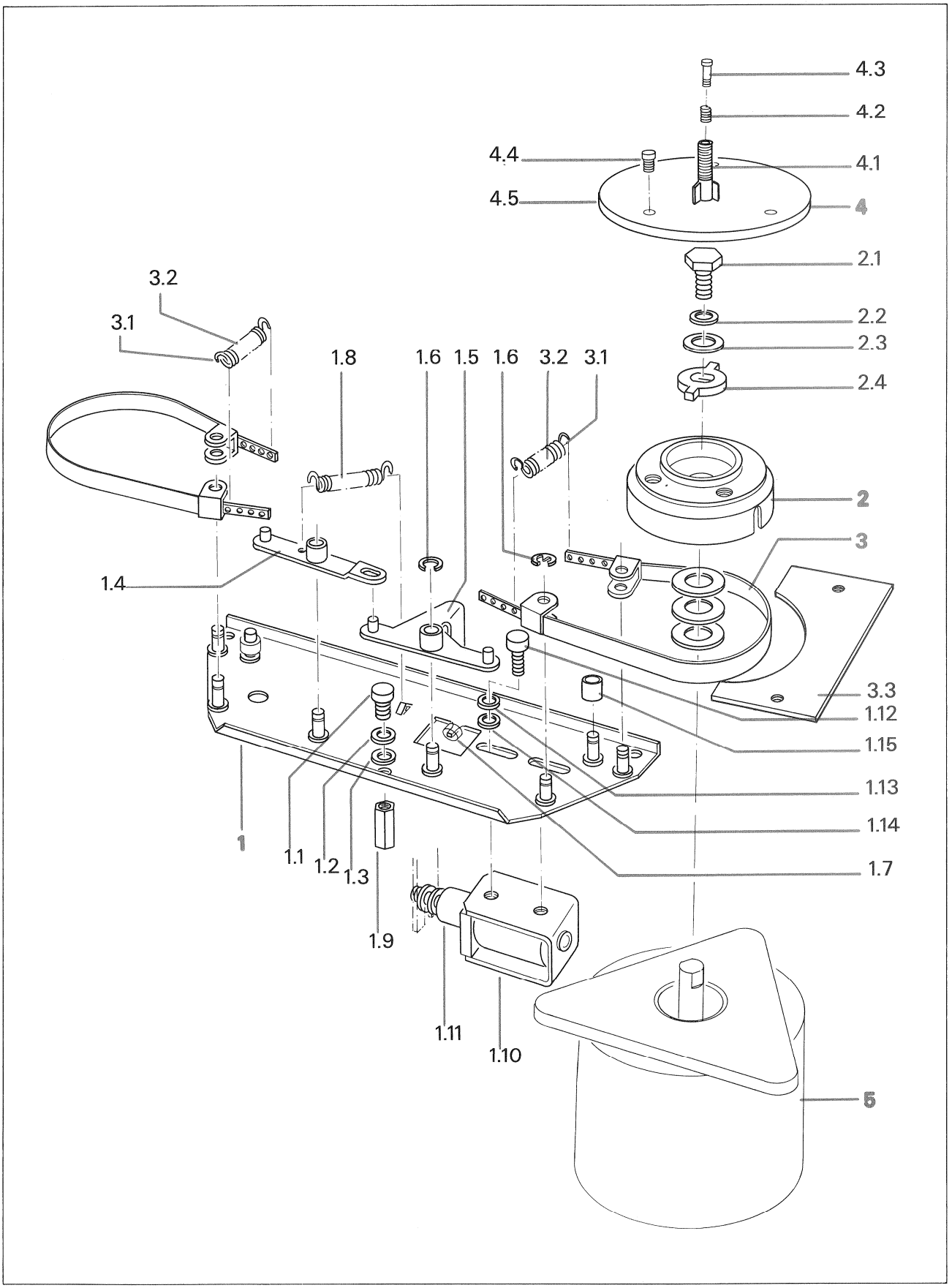

Brake Chassis

Pos	Qty	Order no.	Part name	Spezification
1		**1.177.180.82**	**Brake Chassis**	**compl.**
		1.077.406.00	**Brake Chassis**	
1.1		21.53.0354	Z-Srew IS	M3x6
1.2		24.16.1030	Lock washer	D3,2/5,5
1.3		23.01.2032	Washer	D3,2/7x0,5
1.4		1.077.415.00	Brake lever	left
1.5		1.077.411.00	Brake lever	right
1.6		24.16.3032	Circlip	D3,2
1.7		1.067.100.36	Stop tube	
1.8		1.062.210.06	Return spring	left
1.9		1.010.139.27	Spacer bolt	
1.10		1.014.852.00	Brake solenoid	
1.11		1.014.854.00	Plunger	compl.
1.12.		21.53.0353	Z-Srew IS	M3x5
1.13		24.16.3032	Circlip	D3,2
1.14		23.01.2032	Washer	D3,2/7x0,5
1.15		1.067.170.14	Rubber tube	
2		**1.067.242.00**	**Brake drum**	**compl.**
2.1		21.01.4455	Srew hex	M4x8
2.2		24.16.1040	Lock washer	D4,3/7
2.3		23.01.3043	Washer	D4,3/12x1
2.4		1.067.100.27	Cam disc	
3		**1.727.124.00**	**Brake band**	**compl.**
or		**1.167.866.00**	**Brakeband for ½" Version with serial number below 1081**	
3.1		1.077.100.13	Brake tension spring	
3.2		1.727.100.90	Rubber tube	
3.3		1.727.101.40	Guide for Brakeband	
4		**1.013.062.00**	**Spooling plate (¼")**	**compl.**
4.1		1.067.688.01	Cine centre sleeve (¼")	
4.2		1.067.688.02	Cine centre spring (¼")	
4.3		1.062.390.02	Cine centre shaft srew (¼")	M3,5
4.4		21.51.0355	Z-Srew IS (¼")	M3x8
4.5		1.013.062.01	Spooling plate (¼")	
5		**1.021.260.81**	**Spooling motor**	**compl.**
or		**1.021.250.00**	**Spooling motor for ½" Version with Serial number below 1081**	

8.11 Terminal Board

Terminal Board 1/4" Version

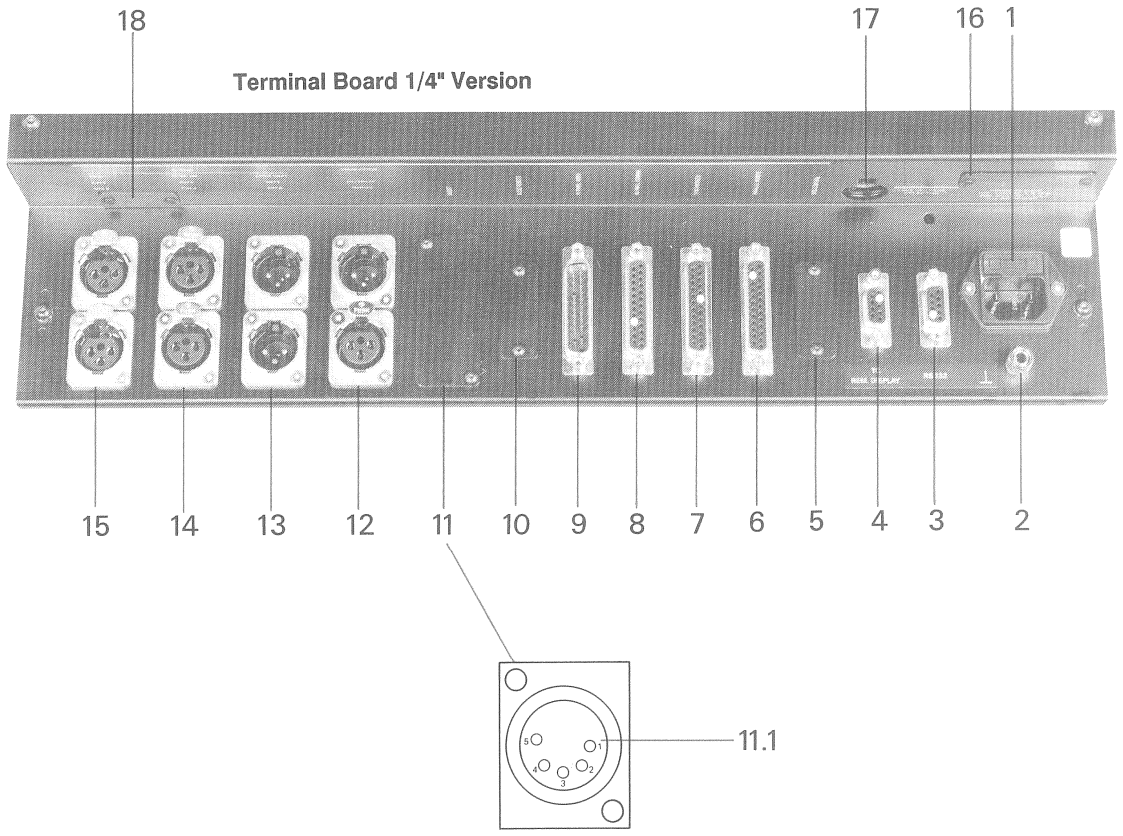

Terminal board 1/2" 4-channel Version

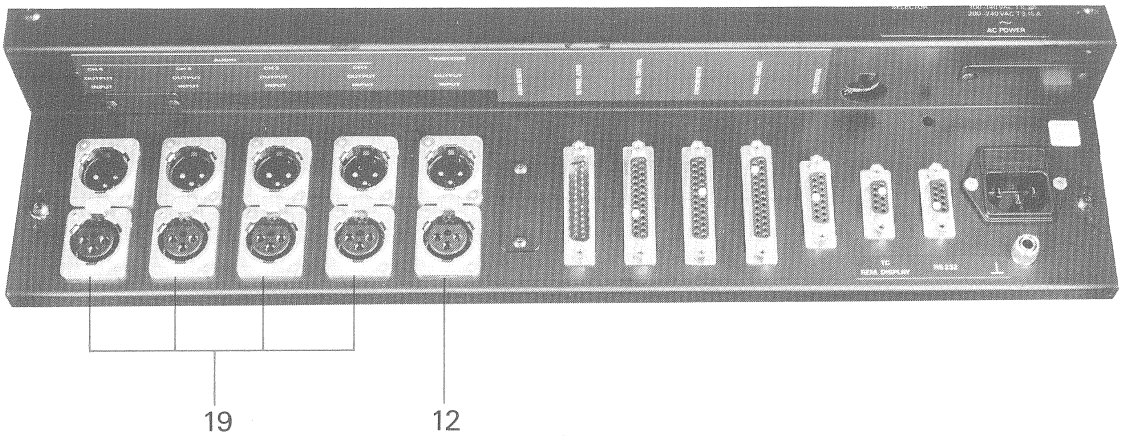

Terminal Board

Pos	Qty	Order No.	Part name	Spezification
1		54.42.0003 51.01.0119 51.01.0122	Power socket Fuse 1,6 A Fuse 3,15 A	 (220 V) (110 V)
2		1.010.001.53	0V Terminal	
3		1.727.245.81	Wire harness RS232	
4		1.727.725.81 1.820.560.05	Connection TC remote display (Standard for TC-Version) or cover plate	
5		1.727.266.00 1.820.560.10	NRS System (option) or cover plate	
6		1.727.261.00	Wire harness parallel remote	
7		1.727.263.00 1.820.560.06	Wire harness synchronizer (standard for TC-Versions), or cover plate.	
8		1.727.243.00 1.820.560.06	Wire harness VU panel control (only VUK-Versions), or cover plate.	
9		1.727.247.00 1.820.560.06	Wire harness VU panel audio (only VUK Versions), or cover plate.	
10		1.727.256.00	Audio channel remote control	
11 11.1		1.727.257.00 1.727.091.02 1.727.101.09	Wire harness Insert (option) 5-pol XLR-Socket (standart for Monitor-Panel Version) or cover plate	
12		1.727.730.00 1.727.101.09	Wire harness or cover plate	TC IN / OUT
13 or		1.727.731.00 1.727.240.00	XLR Line -Output 2CH incl. wire harness XLR Output Mono incl. wire harness	
14 or		1.727.732.00 1.727.241.00	XLR Line Input 2CH incl. wire harness XLR Input Mono incl. wire harness	
15 or		1.727.733.00 1.727.101.09 1.727.242.00	XLR Microfon Inputs 2CH (only by internal VU meter Version) or cover plate or XLR Microfon Input Mono	
16		73.01.0116 1.010.013.31	Elapsed time meter (option) or plastic cover	
17		53.03.0128	Voltage selector	
18		1.727.249.00 55.12.0007 1.820.560.05	Phantom switch incl. wire harness Phantom powering switch or cover plate.	
19		1.727.616.00	XLR-Line In/Output incl. harness	

8.12 Overbridges

VU-Meter Overbridge

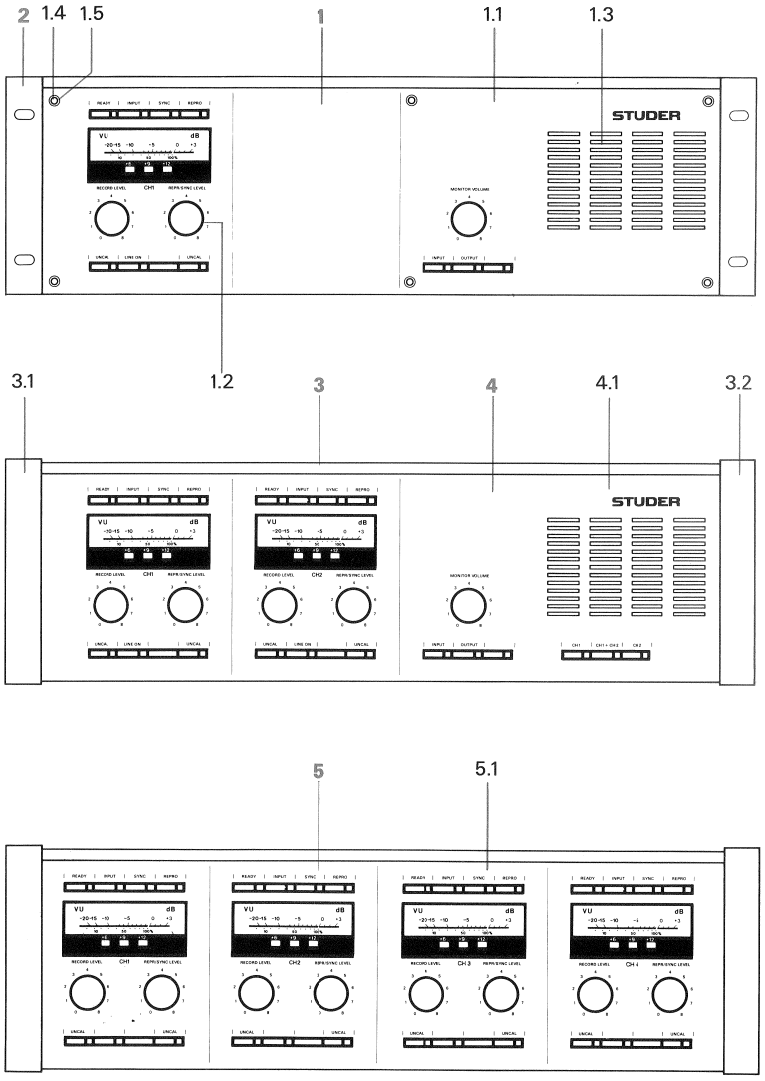

Monitoring Overbridge

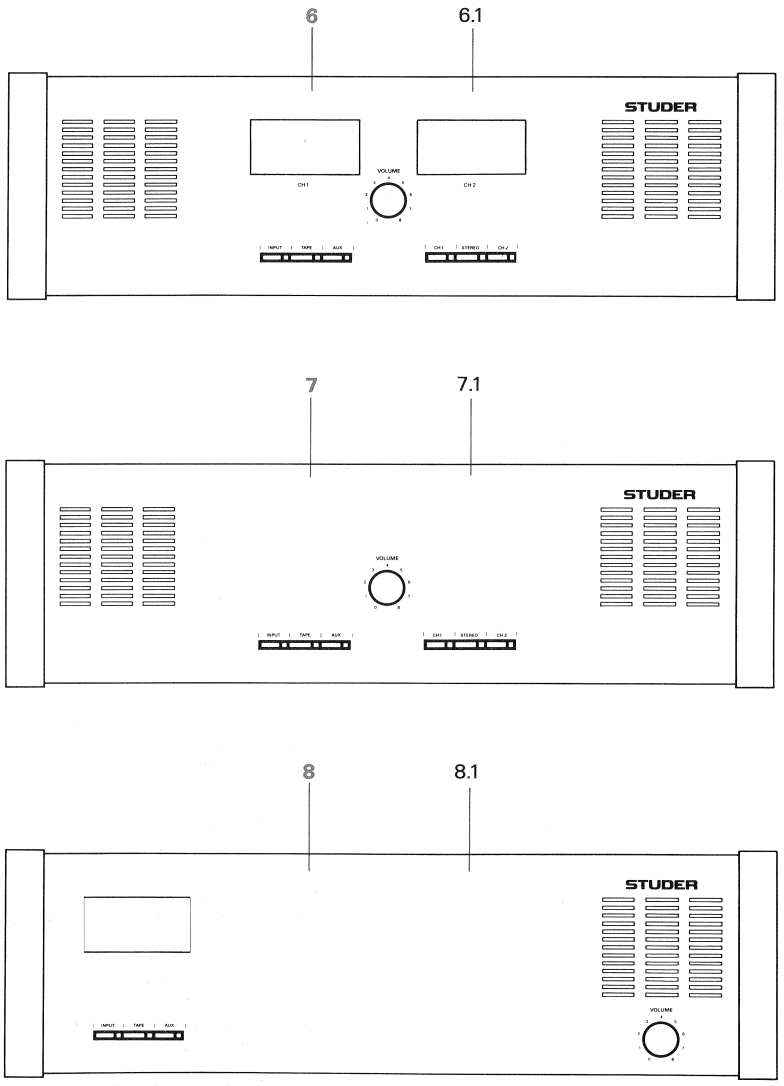

Overbridges

Pos	QTY	Order no.	Part name	spezification
1		1.727.936.00	Ext. panel mono compl. with wooden side panels	
		1.727.958.00	Ext. monitor panel mono compl. with 19" rack rail set	
1.1		1.727.930.01	Ext. front panel cover mono	
1.2		1.727.100.43	Buttom	
1.3		71.01.0159	Loudspeaker	
1.4		1.010.025.21	Screw	M3x6
1.5		1.010.001.24	Washer	M3
2		1.727.952.00	19" rack box	compl.
3		1.811.550.00	Overbridge with wooden side panels	
3.1		1.820.550.03	Wooden side panel	left
3.2		1.820.550.04	Wooden side panel	right
4		1.727.926.00	Ext. panel stereo compl. with wooden side panels	
		1.727.956.00	Ext. panel stereo compl. with 19" rack rail set	
4.1		1.727.920.01	Ext. front panel cover 2VU	
5		1.727.940.00	Ext. panel 4-CH compl. with wooden side panels	
		1.727.947.00	Ext. panel 4-CH compl. with 19" rack rail set	
5.1		1.727.940.01	Ext. front panel cover 4VU	
6		1.727.960.00	Ext. Stereo-VU monitor panel compl. with wooden side panels	
6.1		1.727.960.01	Ext. Stereo-VU monitor front cover plate	
7		1.727.900.00	Ext. monitor panel stereo compl. with wooden side panel	
7.1		1.727.900.01	Ext. monitor front panel cover	
8		1.727.967.00	Ext. Mono-VU monitor panel compl. with wooden side panels	
8.1		1.727.967.01	Ext. Mono-VU monitor front panel cover	

8.13.1 Console without overbridge

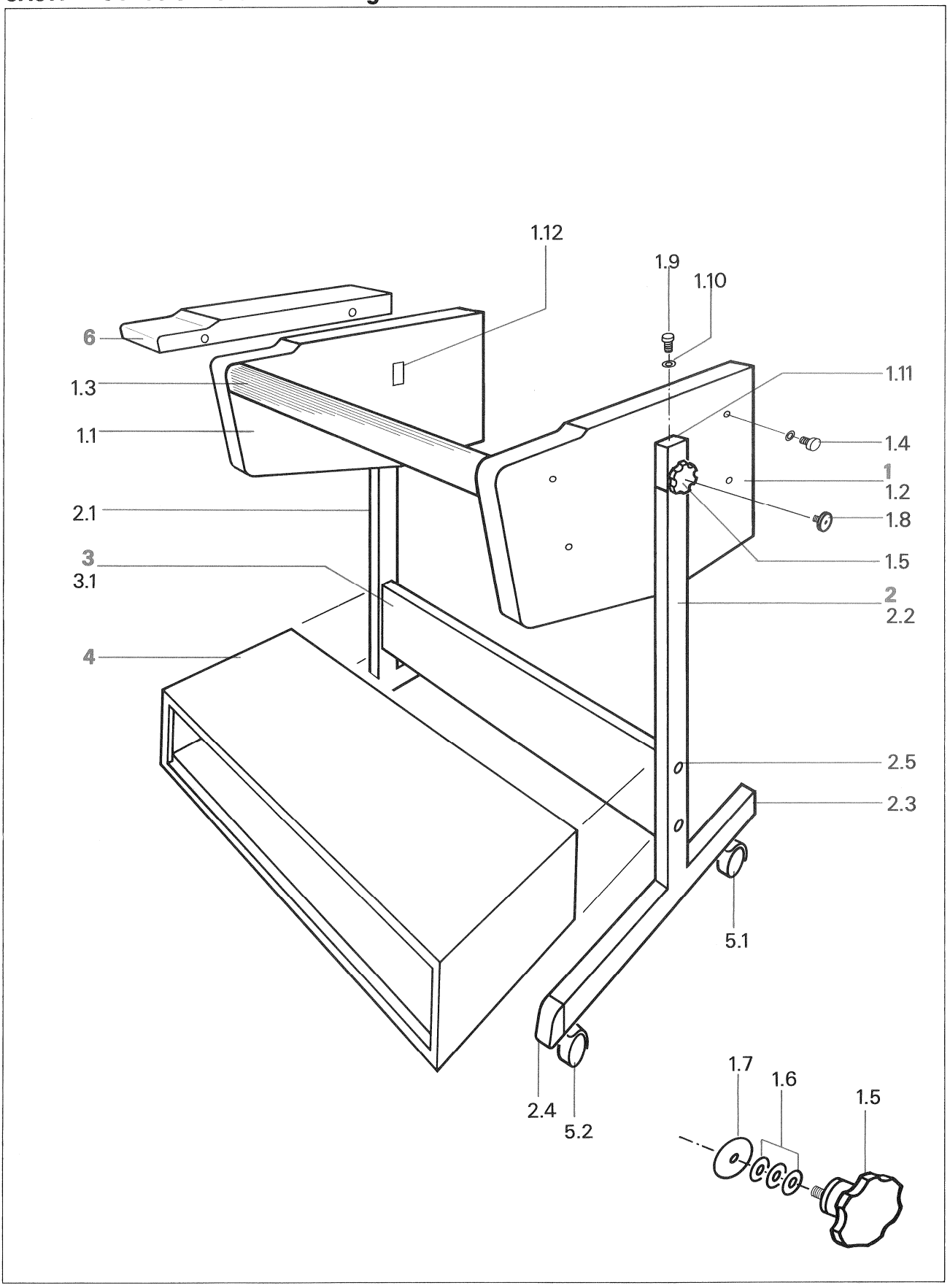

Console without overbridge

Pos	QTY	Order no.	Part name	spezification
		20.020.205.27	Console with traverse for machines without overbridge	
		20.020.205.37	Console with pedestal rack 19" for machine without overbridge	
1		**1.058.080.00**	**Console set without overbridge**	
1.1		1.058.080.01	Wooden side panel	left
1.2		1.058.080.02	Wooden side panel	right
1.3		1.058.071.00	Leather hand rest	
		21.53.0456	Srew	Z IS M4x10
1.4		1.010.037.21	Srew IS	M5x30
		24.16.1050	Lock washer	D5,3/9
1.5		1.058.053.06	Handwheel	M10
1.6	3	37.01.0128	Spring washer	
1.7		1.058.053.04	Thrust ring	
1.8		1.058.053.05	Special srew	M10
1.9		1.010.052.21	Z-Srew IS	M5x50
1.10		24.16.1050	Lock washer	D5,3/9
1.11		1.058.068.00	Bearing braket	
1.12		1.058.057.04	Special spring for grounding pedestal rack	
2		**1.058.050.00**	**Set of legs**	**compl.**
2.1		1.058.060.00	Leg left	H=780/840
2.2		1.058.061.00	Leg right	H=780/840
2.3		1.038.880.01	Cover cap straight	
2.4		1.058.001.05	Plastic plug	
2.5		31.03.0106	Plastic cover	
		21.53.0571	Z-srew	IS M6x14
		26.16.1060	Lock washer	D6,4/10
3		**1.058.101.00**	**Traverse set kpl.**	
3.1		1.058.112.00	Traverse	
4		**1.058.057.00**	**19" Pedestal rack 19"**	
5.1		33.04.0270	Castor black without brake	
5.2		33.04.0271	Castor black with brake	
6		**1.058.081.00**	**Set of side brakets compl.**	**(option)**
		1.058.081.03	**Side braket.**	

Filler panels for 19" pedestal rack

	gray paint	anodized
1 unit width	1.918.011.00	1.918.001.00
2 units width	1.918.012.00	1.918.002.00
3 units width	1.918.013.00	1.918.003.00
Srew for 19" rack mounting M6x12		21.99.0164
Srew for 19" rack mounting M6x16		21.99.0167
Washer for M6 23.99.0121		

8.13.2 Console with Overbridge 1/2"

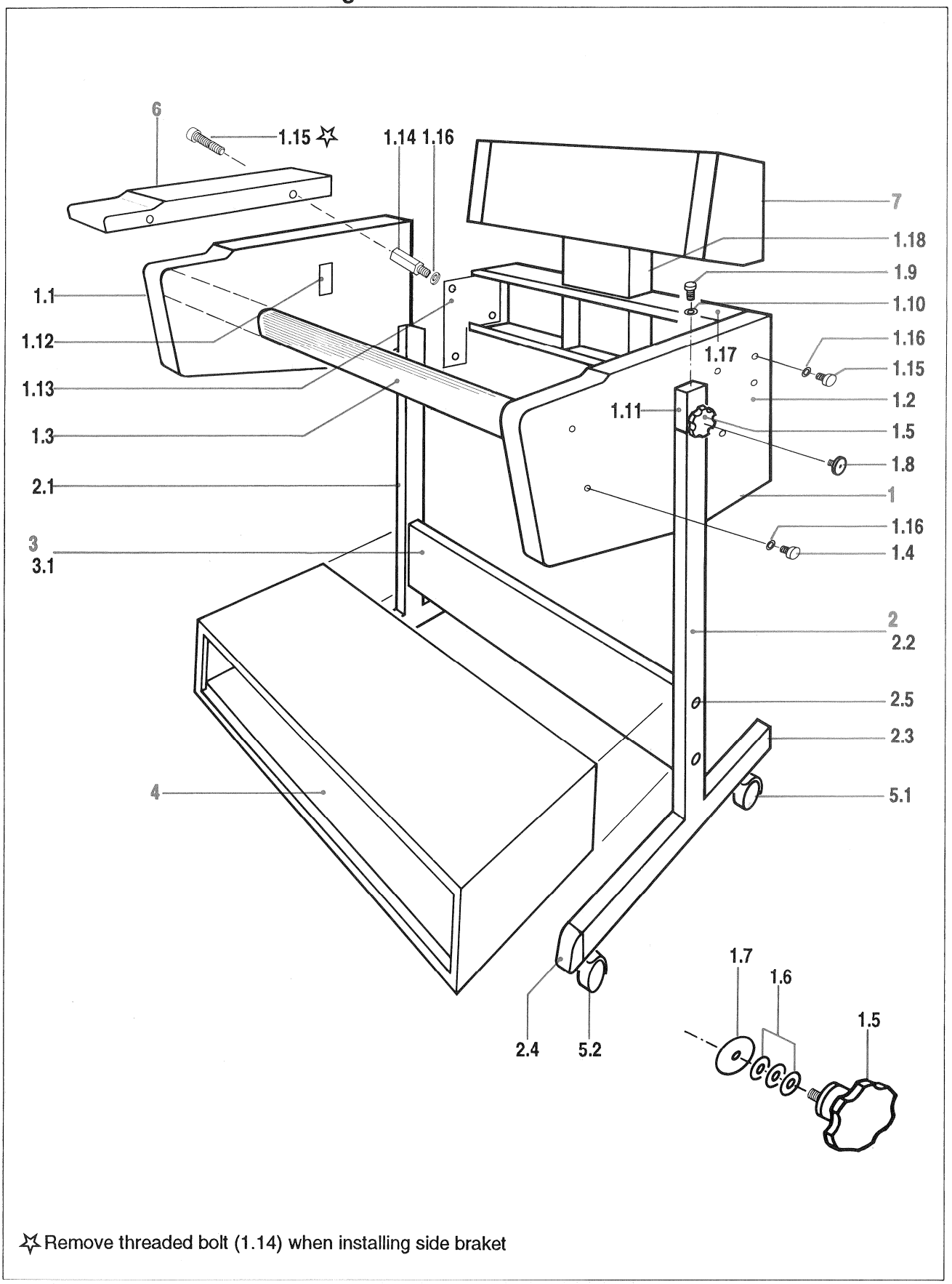

☆ Remove threaded bolt (1.14) when installing side braket

Console with Overbridge 1/2"

Pos	QTY	Order no.	Part name	spezification
		20.020.205.10 **20.020.205.20**	**Console with overbridge and traverse ½"** **Console with overbridge and 19" pedestal rack (½")**	
1		**1.058.059.00**	**Console set with overbridge**	**compl.**
1.1		1.058.059.01	Wooden side panel ½"	left
1.2		1.058.059.02	Wooden side panel ½"	right
1.3		1.058.071.00	Leather hand rest	
		21.53.0456	Srew	Z IS M4x10
1.4		1.010.037.21	Srew IS	M5x30
1.5		1.058.053.06	Handwheel	M10
1.6	3	37.01.0128	Spring washer	
1.7		1.058.053.04	Thrust ring	
1.8		1.058.053.05	Special srew	M10
1.9		1.010.052.21	Z-Srew IS	M5x50
1.10		24.16.1050	Lock washer	D5,3/9
1.11		1.058.068.00	Bearing braket	
1.12		1.058.057.04	Special spring for grounding pedestal rack	
1.13		1.058.086.00	Grounding contact plate set	
		1.058.086.01	Grounding contact plate	
1.14		1.058.086.02	Threaded bolt	M5/M5
1.15		1.010.060.21	Screw	M5/18
or	4	1.058.077.04	Special screw	M5
1.16		24.16.1050	Lockwasher	D5,3/9
1.17		1.058.072.00	Console rear cover with overbridge support	
1.18		1.058.100.17	Cover for overbridge support	
2		**1.058.050.00**	**Set of legs**	**compl.**
2.1		1.058.060.00	Leg left	H=780/840
2.2		1.058.061.00	Leg right	H=780/840
2.3		1.038.880.01	Cover cap straight	
2.4		1.058.001.05	Plastic plug	
2.5		31.03.0106	Plastic cover	
		21.53.0571	Z-srew	IS M6x14
		26.16.1060	Lock washer	D6,4/10
3		**1.058.101.00**	**Traverse set kpl.**	
3.1		1.058.112.00	Traverse	
4		**1.058.057.00**	**19" Pedestal rack 19"**	
5.1		33.04.0270	Castor black without brake	
5.2		33.04.0271	Castor black with brake	
6		**1.058.081.00** **1.058.081.03**	**Set of side brakets compl.** **Side braket.**	**(option)**
7			**Overbridge Versions** **see: paragraph 8.11 Overbridges**	

Console with Overbridge 1/4"

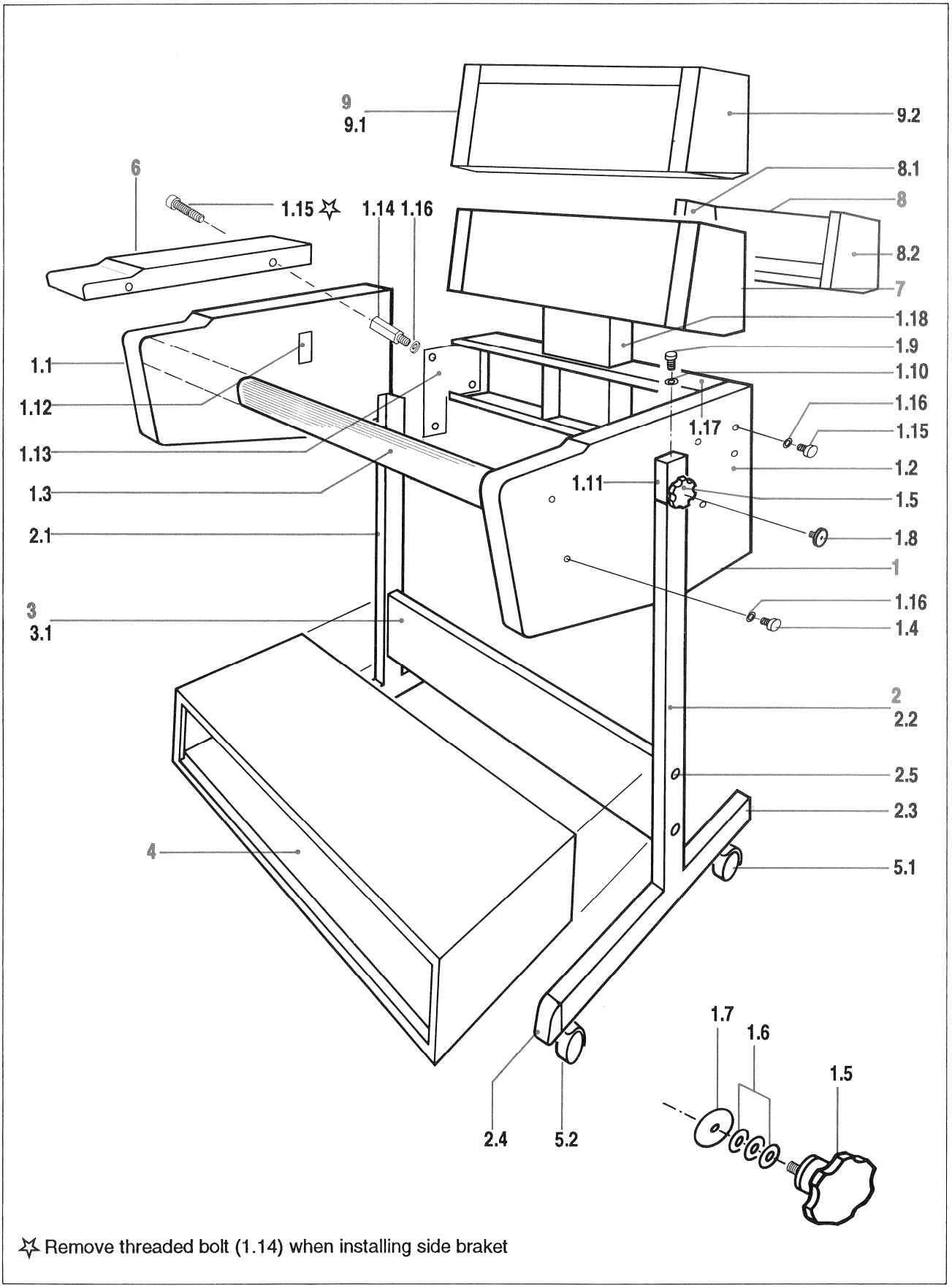

✡ Remove threaded bolt (1.14) when installing side braket

Console with Overbridge 1/4"

Pos	QTY	Order no.	Part name	spezification
		20.020.205.07 20.020.205.17	Console with overbridge and traverse Console with overbridge and 19" pedestal rack	
1		1.058.079.00	Console set with overbridge	
1.1		1.058.079.01	Wooden side panel	left
1.2		1.058.079.02	Wooden side panel	right
1.3		1.058.071.00	Leather hand rest	
		21.53.0456	Srew	Z IS M4x10
1.4		1.010.037.21	Srew IS	M5x30
1.5		1.058.053.06	Handwheel	M10
1.6	3	37.01.0128	Spring washer	
1.7		1.058.053.04	Thrust ring	
1.8		1.058.053.05	Special srew	M10
1.9		1.010.052.21	Z-Srew IS	M5x50
1.10		24.16.1050	Lock washer	D5,3/9
1.11		1.058.068.00	Bearing braket	
1.12		1.058.057.04	Special spring for grounding pedestal rack	
1.13		1.058.086.00	Grounding contact plate set	
		1.058.086.01	Grounding contact plate	
1.14		1.058.086.02	Threaded bolt	M5/M5
1.15		1.010.060.21	Screw	M5/18
or	4	1.058.077.04	Special screw	M5
1.16		24.16.1050	Lockwasher	D5,3/9
1.17		1.058.072.00	Console rear cover with overbridge support	
1.18		1.058.100.17	Cover for overbridge support	
2		1.058.050.00	Set of legs	compl.
2.1		1.058.060.00	Leg left	H=780/840
2.2		1.058.061.00	Leg right	H=780/840
2.3		1.038.880.01	Cover cap straight	
2.4		1.058.001.05	Plastic plug	
2.5		31.03.0106	Plastic cover	
		21.53.0571	Z-srew	IS M6x14
		26.16.1060	Lock washer	D6,4/10
3		1.058.101.00	Traverse set kpl.	
3.1		1.058.112.00	Traverse	
4		1.058.057.00	19" Pedestal rack 19"	
5.1		33.04.0270	Castor black without brake	
5.2		33.04.0271	Castor black with brake	
6		1.058.081.00 1.058.081.03	Set of side brakets compl. Side braket.	(option)
7			Overbridge Versions see: paragraph 8.11 Overbridges	
8		21.811.560.00	Shelf	
8.1		1.820.572.01	Wooden side panel	left
8.2		1.820.572.02	Wooden side panel	right
9		1.058.058.00	Housing for TLS 4000 or emulator controller with "LCU-Format" for add on to VUK panel overbridge	
9.1		1.058.058.04	Wooden side-panel	left
9.2		1.058.058.05	Wooden side-panel	right

8.14 Labels

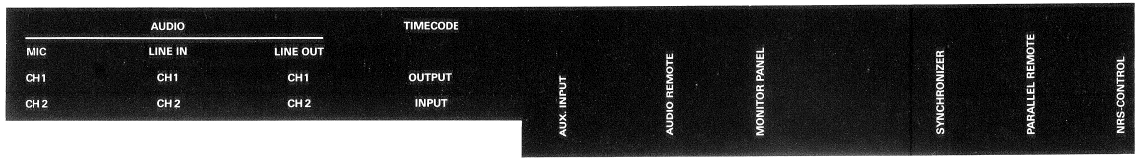

1.727.097.01

1.727.101.27

1.727.600.36

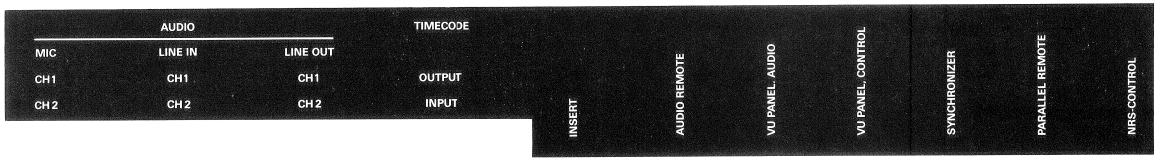

1.727.101.26

1.727.600.35

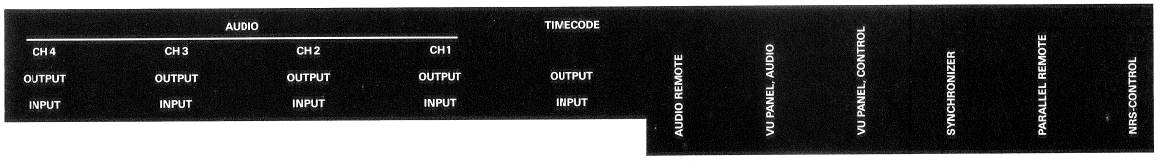

1.727.600.34

1.727.100.57

1.727.101.08

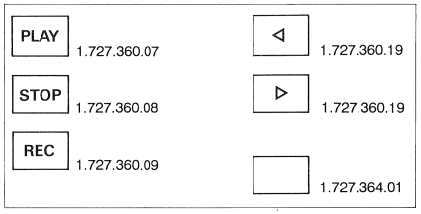

20.010.001.00

9. Accessories: Diagrams and Spare Parts

Tape deck remote control cabinet ..... **1.328.250.00** **9/1**
-Tape deck remote control PCB ..... 1.328.251.81 ..... 9/3

Tape deck remote control module ..... **1.328.255.00** **9/5**
-Pushbutton PCB ..... 1.328.256.00 ..... 9/7
-Connector PCB ..... 1.328.257.81 ..... 9/9

Remote timer (RS232) ..... **1.328.275.00** **9/11**
-CPU board ..... 1.328.276.21 ..... 9/13
-Display board ..... 1.328.277.00 ..... 9/15

Varispeed for remote control cabinet **1.328.253.00**
Varispeed control module ..... **1.328.290.00** **9/17**
-Varispeed control PCB ..... 1.810.762.82 ..... 9/19
-Varispeed control PCB ..... 1.810.762.83 ..... 9/21

Varispeed controller ..... **1.328.280.00** **9/23**
-Varispeed display and keyboard ..... 1.328.281.00 ..... 9/25
-Varispeed main board ..... 1.328.282.20 ..... 9/27

Audio remote control 2CH **1.328.512.00**
Audio remote control 4CH ..... **1.328.515.00** **9/31**
-Audio remote switch 2CH (red LED) ..... 1.328.498.00 ..... 9/33
-Audio remote switch 4CH (red LED) ..... 1.328.499.00 ..... 9/33
-Audio remote switch 2CH (yellow LED) ..... 1.328.514.00 ..... 9/33
-Audio remote switch 4CH (yellow LED) ..... 1.328.517.00 ..... 9/33
-Audio remote control board 2CH+TC ..... 1.328.513.00 ..... 9/35
-Audio remote control board 4CH+TC ..... 1.328.516.00 ..... 9/35

Blockdiagram remote timer display **9/38**
Remote timer display ..... **1.328.330.00** **9/39**
-Display driver board ..... 1.328.331.00 ..... 9/41
-Display board ..... 1.328.332.00 ..... 9/43
-Connection cable ..... 1.328.333.00 ..... 9/45

Remote time code display ..... **1.328.285.00** **9/47**
-TC display driver board ..... 1.328.284.20 ..... 9/49
-Display board ..... 1.328.286.00 ..... 9/53

Labels **9/54**

TAPE DECK REMOTE CONTROL CABINET (PARALLEL) 1.328.250.00

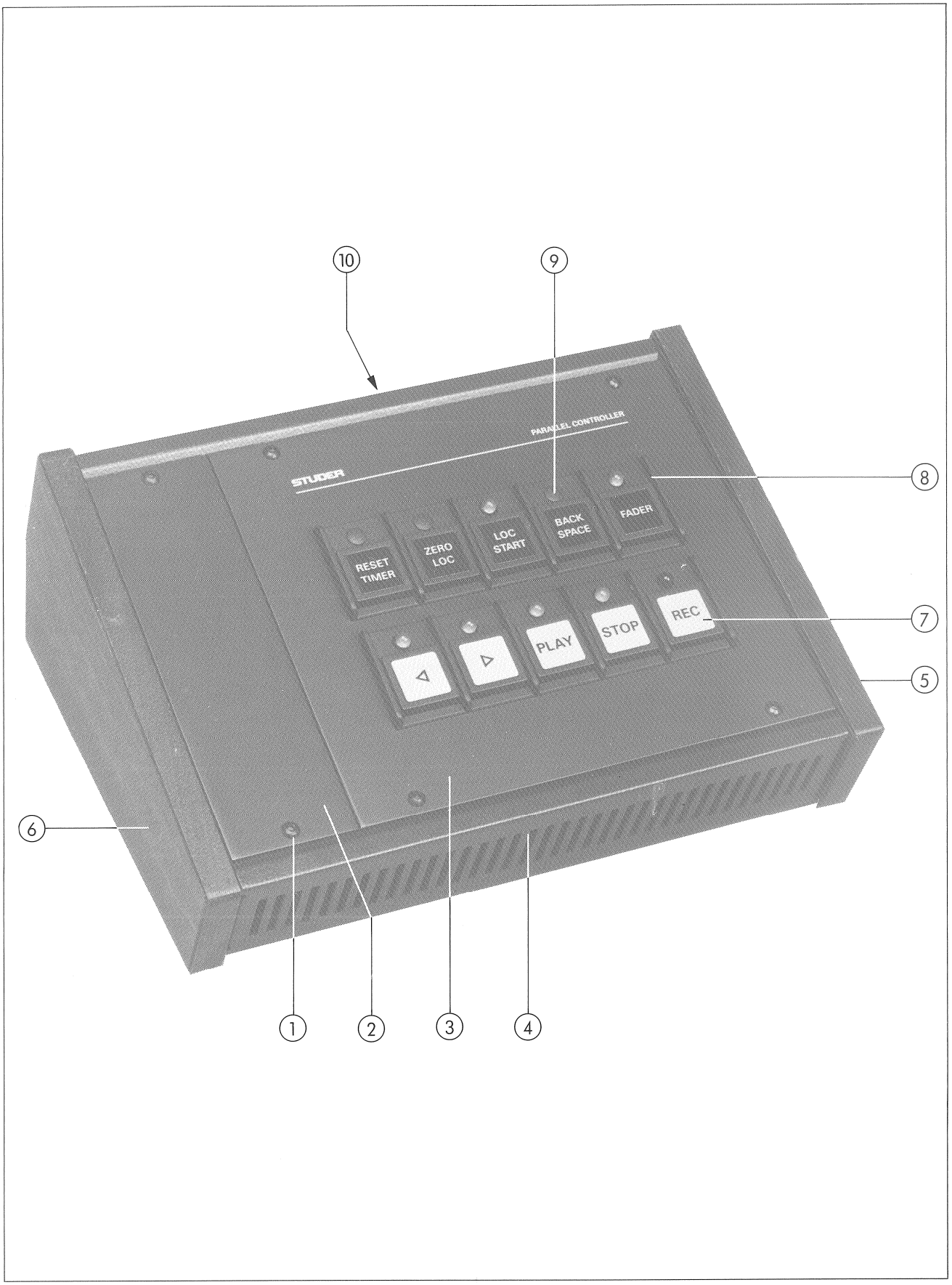

TAPE DECK REMOTE CONTROL CABINET (PARALLEL) 1.328.250.00

Pos.	QTY.	Order Number	Part Name	Specification
	1	1.328.250.00	Tape deck remote control cabinet (parallel)	
	10		(labels: see end of section 9)	
	1	1.328.251.00	TAPE DECK REMOTE CONTROL PCB	
	4 4 4 4	1.328.250.08 1.010.025.21 24.16.1030 23.01.1032	Hex stud bolt Chees head allen screw Fin washer Washer	 M3 x 6
1	6	1.010.025.21	Oval head allen screw	M3 x 6
2	1	1.328.250.05	Dummy plate	
3	1	1.328.250.03	Front cover	
4	1 4	1.820.921.00 31.02.0211	Housing compl. (with pos. 5, 6, 10 and feet) Foot	
5	1 4 4	1.328.250.02 21.53.0454 24.16.1040	Side panel Chees head allen screw Fin washer	right M4 x 6
6	1 4 4	1.328.250.01 21.53.0454 24.16.1040	Side panel Chees head allen screw Fin washer	left M4 x 6
7	10 10	1.011.210.01 1.010.202.37	Push button Pressure spring	
8	2 2	1.810.300.03 1.810.300.06	Push button housing Damping strip	
9	3	1.810.300.21	Plastic cover	
10	1 1 1	35.03.0120 21.51.8454 24.16.1040	Cable mounting support Oval head allen screw Fin washer	 M4 x 6

TAPE DECK REMOTE CONTROL CABINET (PARALLEL) 1.328.250.00
-TAPE DECK REMOTE CONTROL PCB 1.328.251.81

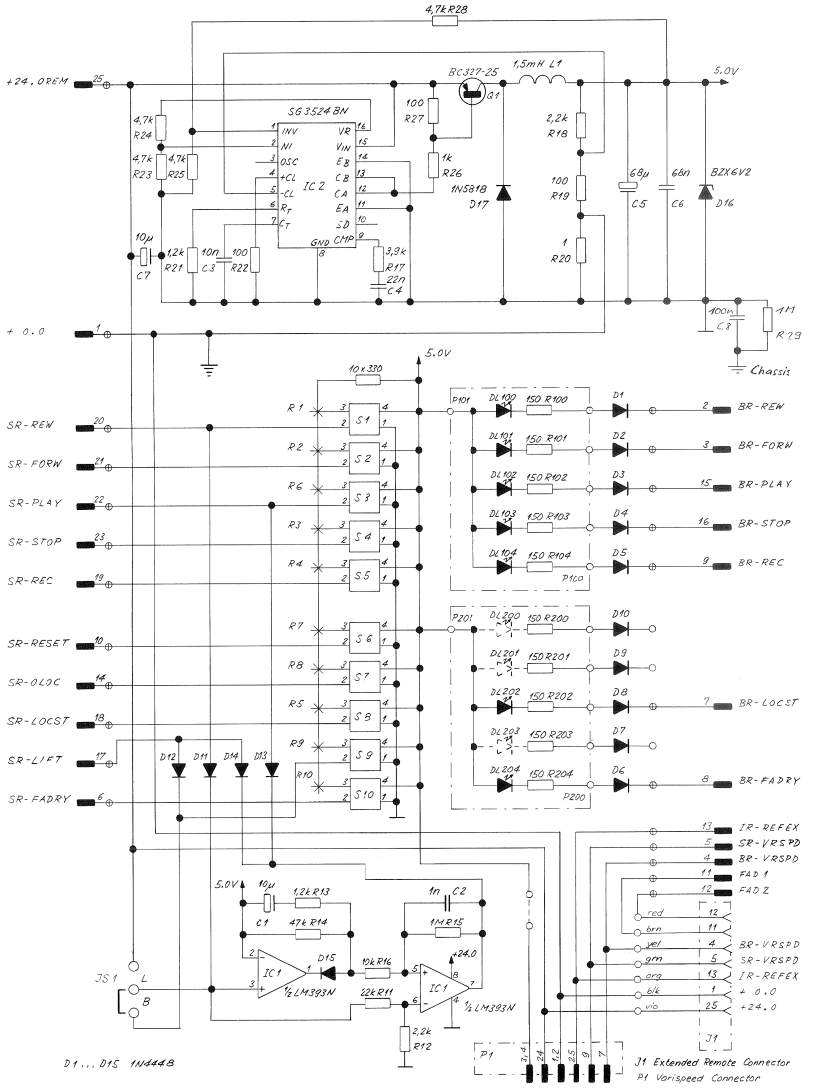

0 14.2.94 ML				PAGE 1 OF 1
STUDER	TAPE DECK REMOTE CONTROL		SC	1.328.251-81

TAPE DECK REMOTE CONTROL CABINET (PARALLEL) 1.328.250.00
-TAPE DECK REMOTE CONTROL PCB 1.328.251.81

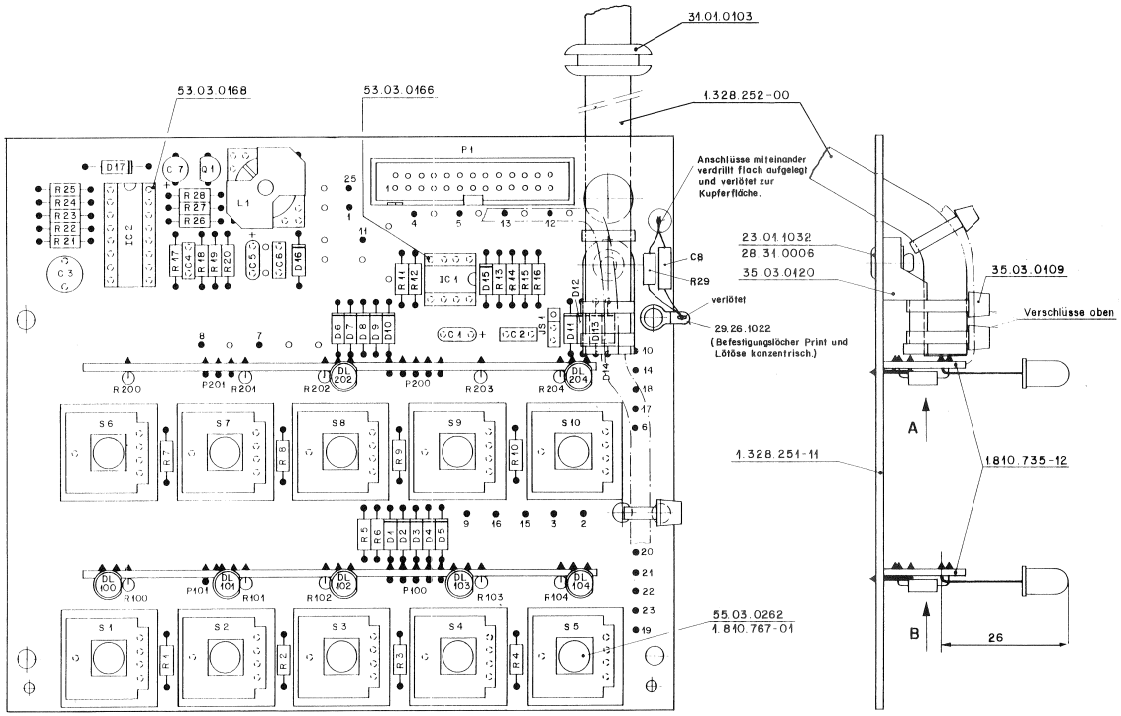

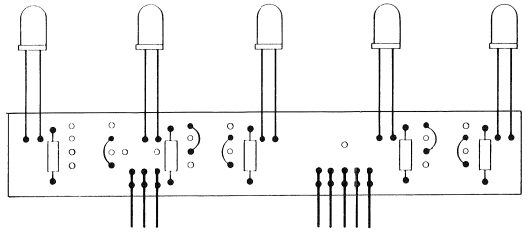

Ansicht A + B

A nur 2 DL und 2 Draht-brücken bestückt.

Ausgabe	Änderung				
					(3)
					(2)
					(1)
26.1.94					(0)
Datum	Unz	Dept	Gez	Index	

Kopie für

STUDER REGENSDORF ZÜRICH | Benennung: TAPE DECK REMOTE CONTROL BOARD ESE | Nummer: 1.328.251-81

Ad	..POS..	...REF.No...	DESCRIPTION	MANUFACTURER
	C.....1	59.26.2100	10 uF 20%, 16V, Sal	Ph
	C.....2	59.06.5102	1 nF 5%, PETP	
	C.....3	59.05.1103	10 nF 1%, Pp	
	C.....4	59.06.0223	22 nF 10%, PETP	
	C.....5	59.26.0680	68 uF 20%, 6.3V, Sal	Ph
	C.....6	59.06.0683	68 nF 20%, PETP	
	C.....7	59.22.6100	10 uF -10%, 40V, El	
	C.....8	59.03.2104	100 nF 35V/us	
	D.....1	50.04.0125	1N4448	Fc,ITT,Ph,Ses,Tf
	D.....2	50.04.0125	1N4448	Fc,ITT,Ph,Ses,Tf
	D.....3	50.04.0125	1N4448	Fc,ITT,Ph,Ses,Tf
	D.....4	50.04.0125	1N4448	Fc,ITT,Ph,Ses,Tf
	D.....5	50.04.0125	1N4448	Fc,ITT,Ph,Ses,Tf
	D.....6	50.04.0125	1N4448	Fc,ITT,Ph,Ses,Tf
	D.....7	50.04.0125	1N4448	Fc,ITT,Ph,Ses,Tf
	D.....8	50.04.0125	1N4448	Fc,ITT,Ph,Ses,Tf
	D.....9	50.04.0125	1N4448	Fc,ITT,Ph,Ses,Tf
	D....10	50.04.0125	1N4448	Fc,ITT,Ph,Ses,Tf
	D....11	50.04.0125	1N4448	Fc,ITT,Ph,Ses,Tf
	D....12	50.04.0125	1N4448	Fc,ITT,Ph,Ses,Tf
	D....13	50.04.0125	1N4448	Fc,ITT,Ph,Ses,Tf
	D....14	50.04.0125	1N4448	Fc,ITT,Ph,Ses,Tf
	D....15	50.04.0125	1N4448	Fc,ITT,Ph,Ses,Tf
	D....16	50.04.1118	6.2 V Z BZX83C 6.2, BZX55C 6.2, ZPD 6.2	ITT,Ses
	D....17	50.04.0512	1N5818 1N5819	Mot
	DL..100	50.04.2112	MW5353 CM4-584B, HLMP-3401	CM,GI,HP
	DL..101	50.04.2112	MW5353 CM4-584B, HLMP-3401	CM,GI,HP
	DL..102	50.04.2112	MW5353 CM4-584B, HLMP-3401	CM,GI,HP
	DL..103	50.04.2112	MW5353 CM4-584B, HLMP-3401	CM,GI,HP
	DL..104	50.04.2111	MW5753 CM4-284B, HLMP-3301	CM,GI,HP
	DL..200	. .	not used	
	DL..201	. .	not used	
	DL..202	50.04.2112	MW5353 CM4-584B, HLMP-3401	CM,GI,HP
	DL..203	. .	not used	
	DL..204	50.04.2112	MW5353 CM4-584B, HLMP-3401	CM,GI,HP

Ad	..POS..	...REF.No...	DESCRIPTION	MANUFACTURER
	IC....1	50.05.0283	LM393N	NS,Tho,TI
	IC....2	50.05.0279	SG3524BN	SG
	JS....1	. .	See note 1	
	L.....1	1.022.197.00	1.5 mH	St
	P.....1	54.14.2003	26 cont. See note 2	
	P...100	54.01.0269	5 cont. AMP Nr. 163.740-3	
	P...101	54.01.0227	3 Cont. AMP Nr. 163.740-1	
	P...200	54.01.0269	5 cont. AMP Nr. 163.740-3	
	P...201	54.01.0227	3 cont. AMP Nr. 163.740-1	
	Q.....1	50.03.0351	BC327-25	ITT,Ph,Sie
	R.....1	57.11.3331	330 Ohm	
	R.....2	57.11.3331	330 Ohm	
	R.....3	57.11.3331	330 Ohm	
	R.....4	57.11.3331	330 Ohm	
	R.....5	57.11.3331	330 Ohm	
	R.....6	57.11.3331	330 Ohm	
	R.....7	57.11.3331	330 Ohm	
	R.....8	57.11.3331	330 Ohm	
	R.....9	57.11.3331	330 Ohm	
	R....10	57.11.3331	330 Ohm	
	R....11	57.11.3223	22 kOhm	
	R....12	57.11.3222	2.2 kOhm	
	R....13	57.11.3122	1.2 kOhm	
	R....14	57.11.3473	47 kOhm	
	R....15	57.11.3105	1 MOhm	
	R....16	57.11.3103	10 kOhm	
	R....17	57.11.3392	3.9 kOhm	
	R....18	57.11.3222	2.2 kOhm	
	R....19	57.11.3101	100 Ohm	
	R....20	57.11.3109	1 Ohm	
	R....21	57.11.3122	1.2 kOhm	
	R....22	57.11.3101	100 Ohm	
	R....23	57.11.3472	4.7 kOhm	
	R....24	57.11.3472	4.7 kOhm	
	R....25	57.11.3472	4.7 kOhm	
	R....26	57.11.3102	1 kOhm	
	R....27	57.11.3101	100 Ohm	
	R....28	57.11.3472	4.7 kOhm	
	R....29	57.11.3105	1 MOhm	
	R...100	57.11.3151	150 Ohm	
	R...101	57.11.3151	150 Ohm	
	R...102	57.11.3151	150 Ohm	
	R...103	57.11.3151	150 Ohm	
	R...104	57.11.3151	150 Ohm	
	R...200	57.11.3151	150 Ohm	
	R...201	57.11.3151	150 Ohm	
	R...202	57.11.3151	150 Ohm	
	R...203	57.11.3151	150 Ohm	
	R...204	57.11.3151	150 Ohm	
	S.....1	. .	See note 3	
	S.....2	. .	See note 3	
	S.....3	. .	See note 3	
	S.....4	. .	See note 3	
	S.....5	. .	See note 3	
	S.....6	. .	See note 3	
	S.....7	. .	See note 3	
	S.....8	. .	See note 3	
	S.....9	. .	See note 3	
	S....10	. .	See note 3	

Note 1 - Contact pin: Studer 54.01.0020, Berg 75 160-102-36
Bridge: Studer 54.01.0021, Philips 2422 024 88003

Note 2 - Connector: Yamaichi FAP-26-08//4, Burndy BPH 9 B 26 800 GS

Note 3 - Switch: Studer 55.03.0261, Rafi 3.13001.110
Extender: Studer 55.03.0262, Rafi 5.58101.690

Ce=Ceramic, El=Electrolytic, Sal=Solid aluminium,
PETP=Polyesterfilm, Pp=Polypropylen.

MANUFACTURER: CK=Chicago Miniatur, Fc=Fairchild,
GI=General Instruments, HP=Hewlett Packard,
ITT=Intermetall, Mot=Motorola,
NS=National Semiconductors, Ph=Philips, Ses=Sescosem,
SG=Silicon General, Sie=Siemens, St=Studer, Tho=Thomson,
TI=Texas Instruments, Tf=Telefunken.

1.328.251.81 TAPE DECK REMOTE CONTROL ML 94/01/2600

END

TAPE DECK REMOTE CONTROL MODULE (PARALLEL) 1.328.255.00

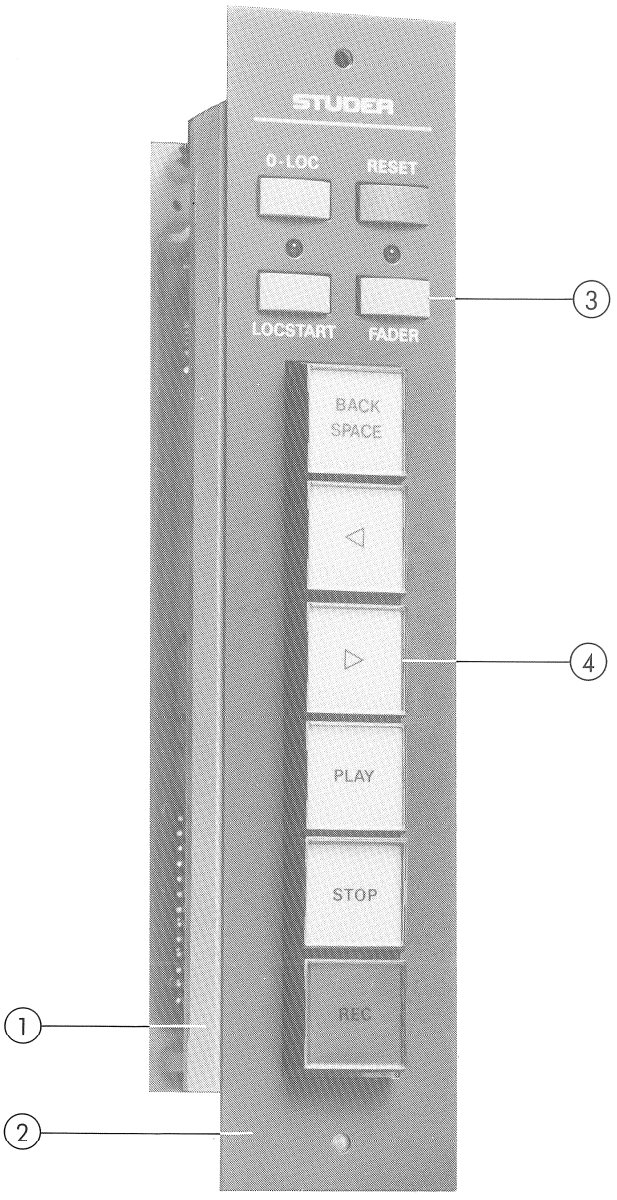

TAPE DECK REMOTE CONTROL MODULE (PARALLEL) 1.328.255.00

Pos.	QTY.	Order Number	Part Name	Specification
	1	1.328.255.00	Tape deck remote control module (parallel)	
	6		(labels: see end of section 9)	
	1	1.328.256.00	PUSH BUTTON PCB	
	1	1.328.257.00	CONNECTOR PCB	
	4 4 4 4	1.010.110.27 21.53.0354 24.16.1030 23.01.1032	Hex stud bolt Chees head allen screw Fin washer Washer	 M3 x 6
1	1	1.328.255.01	Support	
2	1	1.328.255.02	Front cover	
3	1 3	55.15.0122 55.15.0128	Push button Push button	red grey
4	1 5 1 5 6	55.15.0201 55.15.0202 55.15.0212 55.15.0221 55.15.0228	Push button cover Push button cover Diffusing screen Diffusing screen Push button housing	concave flat red white

TAPE DECK REMOTE CONTROL MODULE (PARALLEL) 1.328.255.00
-PUSHBUTTON PCB 1.328.256.00

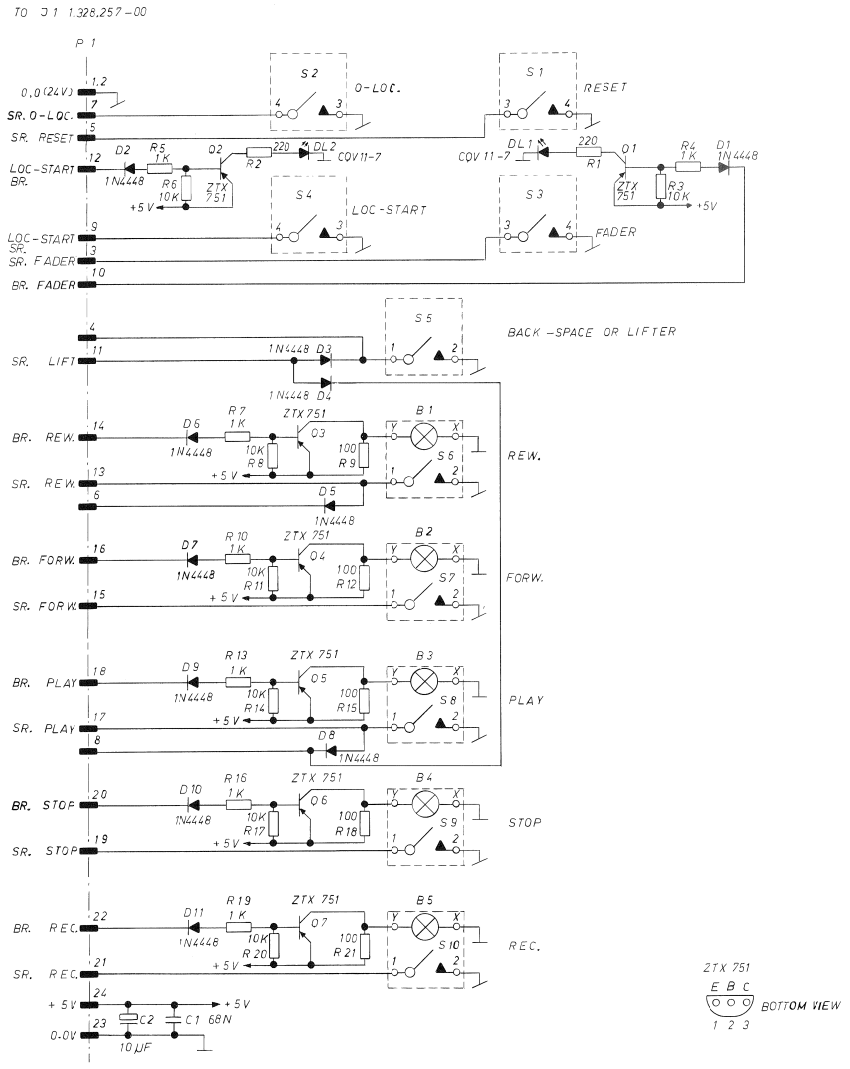

0 12.02.86 C.METZ	. .	. .	. .	. .
	MODUL PARALLEL A727, A812, A820			PAGE 1 OF 1
STUDER	PUSHBUTTON BOARD		SC	1.328.256-00

TAPE DECK REMOTE CONTROL MODULE (PARALLEL) 1.328.255.00
-PUSHBUTTON PCB 1.328.256.00

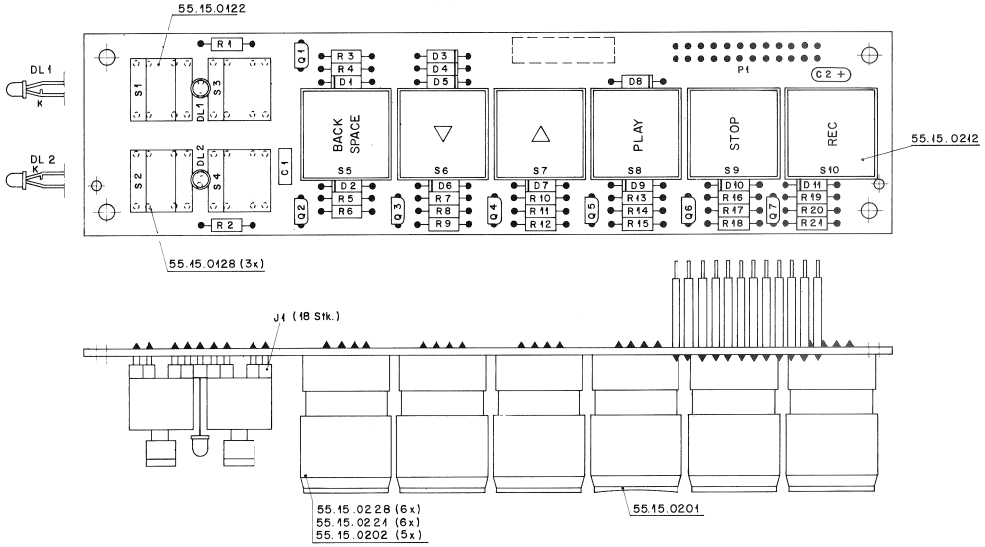

IND.	POS.NO.	PART NO.	VALUE	SPECIFICATIONS / EQUIVALENT	MANUF.
	B....1	51.02.0155		5 V; 0.060 A	
	B....2	51.02.0155		5 V; 0.060 A	
	B....3	51.02.0155		5 V; 0.060 A	
	B....4	51.02.0155		5 V; 0.060 A	
	B....5	51.02.0155		5 V; 0.060 A	
	C....1	59.06.0683	.068 u	10%, 63V , PETP	
	C....2	59.26.2100	10 u	20%, 16V , SAL	
	D....1	50.04.0125	1 N 4448	75 V; 0.1 A Si.	
	D....2	50.04.0125	1 N 4448	75 V; 0.1 A Si.	
	D....3	50.04.0125	1 N 4448	75 V; 0.1 A Si.	
	D....4	50.04.0125	1 N 4448	75 V; 0.1 A Si.	
	D....5	50.04.0125	1 N 4448	75 V; 0.1 A Si.	
	D....6	50.04.0125	1 N 4448	75 V; 0.1 A Si.	
	D....7	50.04.0125	1 N 4448	75 V; 0.1 A Si.	
	D....8	50.04.0125	1 N 4448	75 V; 0.1 A Si.	
	D....9	50.04.0125	1 N 4448	75 V; 0.1 A Si.	
	D....10	50.04.0125	1 N 4448	75 V; 0.1 A Si.	
	D....11	50.04.0125	1 N 4448	75 V; 0.1 A Si.	
	DL....1	50.04.2129	LS 3160	Diffused red (see Note 2)	Sie.
	DL....2	50.04.2129	LS 3160	Diffused red (see Note 2)	Sie.
	F....1	1.010.019.54	2 * 12 pin	24 pcs. L = 20 MM.	
	Q....1	50.03.0352	ZTX 751 S	60 V; 2 A PNP Si.	Fe.
	Q....2	50.03.0352	ZTX 751 S	60 V; 2 A PNP Si.	Fe.
	Q....3	50.03.0352	ZTX 751 S	60 V; 2 A PNP Si.	Fe.
	Q....4	50.03.0352	ZTX 751 S	60 V; 2 A PNP Si.	Fe.
	Q....5	50.03.0352	ZTX 751 S	60 V; 2 A PNP Si.	Fe.
	Q....6	50.03.0352	ZTX 751 S	60 V; 2 A PNP Si.	Fe.
	Q....7	50.03.0352	ZTX 751 S	60 V; 2 A PNP Si.	Fe.
	R....1	57.11.4221	220	2%, 0207 , MF	
	R....2	57.11.4221	220	2%, 0207 , MF	
	R....3	57.11.4103	10 k	2%, 0207 , MF	

IND.	POS.NO.	PART NO.	VALUE	SPECIFICATIONS / EQUIVALENT	MANUF.
	R....4	57.11.4102	1.0 k	2%, 0207 , MF	
	R....5	57.11.4102	1.0 k	2%, 0207 , MF	
	R....6	57.11.4103	10 k	2%, 0207 , MF	
	R....7	57.11.4102	1.0 k	2%, 0207 , MF	
	R....8	57.11.4103	10 k	2%, 0207 , MF	
	R....9	57.11.4101	100	2%, 0207 , MF	
	R....10	57.11.4102	1.0 k	2%, 0207 , MF	
	R....11	57.11.4103	10 k	2%, 0207 , MF	
	R....12	57.11.4101	100	2%, 0207 , MF	
	R....13	57.11.4102	1.0 k	2%, 0207 , MF	
	R....14	57.11.4103	10 k	2%, 0207 , MF	
	R....15	57.11.4101	100	2%, 0207 , MF	
	R....16	57.11.4102	1.0 k	2%, 0207 , MF	
	R....17	57.11.4103	10 k	2%, 0207 , MF	
	R....18	57.11.4101	100	2%, 0207 , MF	
	R....19	57.11.4102	1.0 k	2%, 0207 , MF	
	R....20	57.11.4103	10 k	2%, 0207 , MF	
	R....21	57.11.4101	100	2%, 0207 , MF	
	S....1	55.15.0112	MK II	Momentary pushbutton switch (see Note 1)	MEK.
	S....2	55.15.0112	MK II	Momentary pushbutton switch (see Note 1)	MEK.
	S....3	55.15.0112	MK II	Momentary pushbutton switch (see Note 1)	MEK.
	S....4	55.15.0112	MK II	Momentary pushbutton switch (see Note 1)	MEK.
	S....5	55.15.0231		Momentary pushbutton switch	EAO
	S....6	55.15.0231		Momentary pushbutton switch	EAO
	S....7	55.15.0231		Momentary pushbutton switch	EAO
	S....8	55.15.0231		Momentary pushbutton switch	EAO
	S....9	55.15.0231		Momentary pushbutton switch	EAO
	S....10	55.15.0231		Momentary pushbutton switch	EAO

Note 1 : Device mounted on 53.03.0218 pins. (4 * 2 pcs.)
Index (01) --> Note 2 : Device mounted on 53.99.0126 pins. (1 * 2 pcs.)

CER=Ceramic, EL=Electrolytic, MP=Metallized Paper, MPC=Metallized Polycarbonate, MPET=Metallized Polyester, PC=Polycarbonate, PETP=Polyester
PP=Polypropylene, PS=Polystyrol, SAL=Solid Aluminium, TA=Tantal
Cermet=Ceramic Metal, MF=Metal Film.

MANUFACTURERS :

EAO = Elektro Apparaten Olten
Fe = Ferranti
MEK = Mekanisk Elektrisk Compagni af 1975
Sie = Siemens

ORIG 87/05/11

TAPE DECK REMOTE CONTROL MODULE (PARALLEL) 1.328.255.00
-CONNECTOR PCB 1.328.257.81

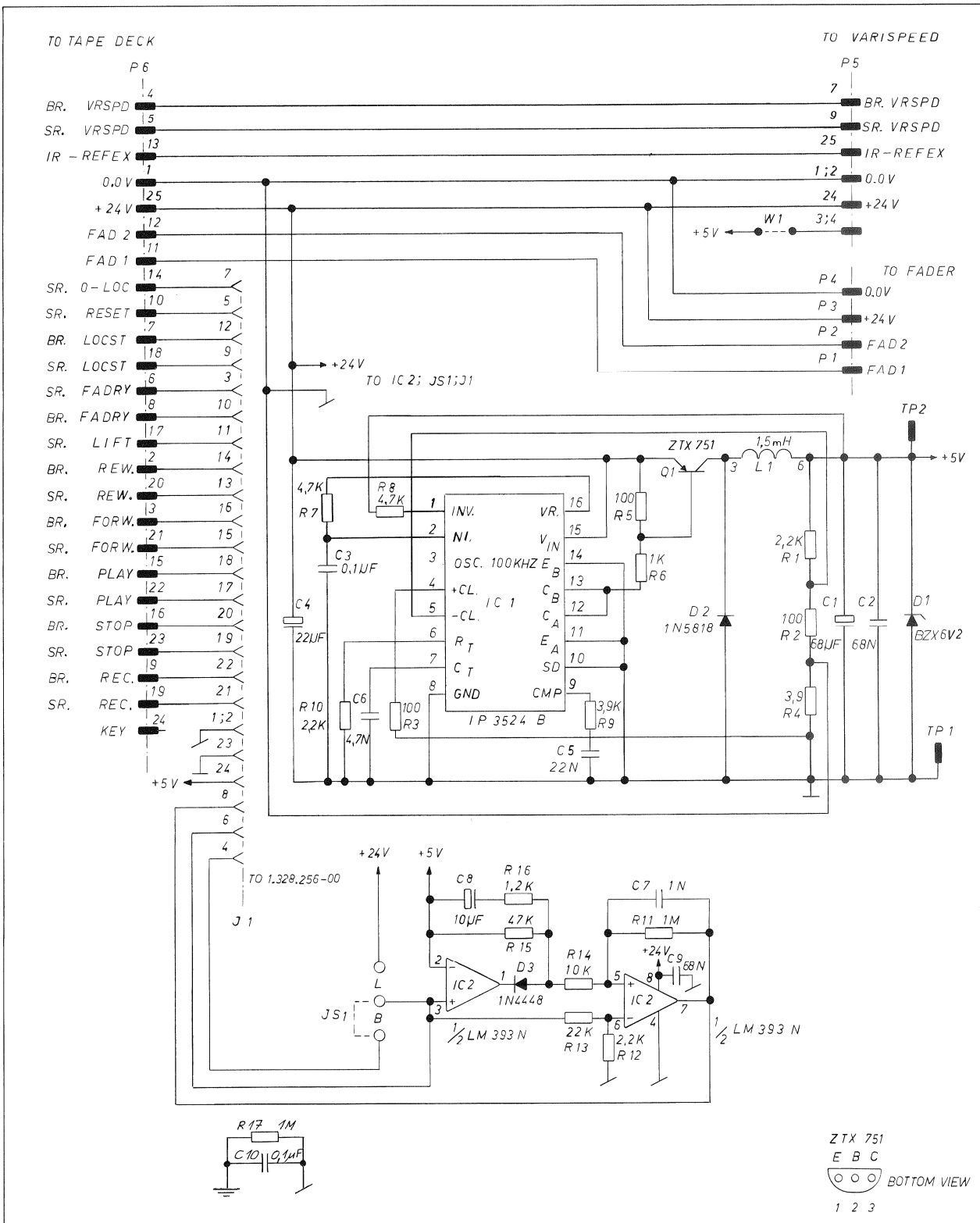

0 02.08.93 C. METZ				PAGE 1 OF 1
	MODUL PARALLEL A727, A812, A820			
STUDER	CONNECTORS BOARD		SC	1.328.257-81

TAPE DECK REMOTE CONTROL MODULE (PARALLEL) 1.328.255.00
-CONNECTOR PCB 1.328.257.81

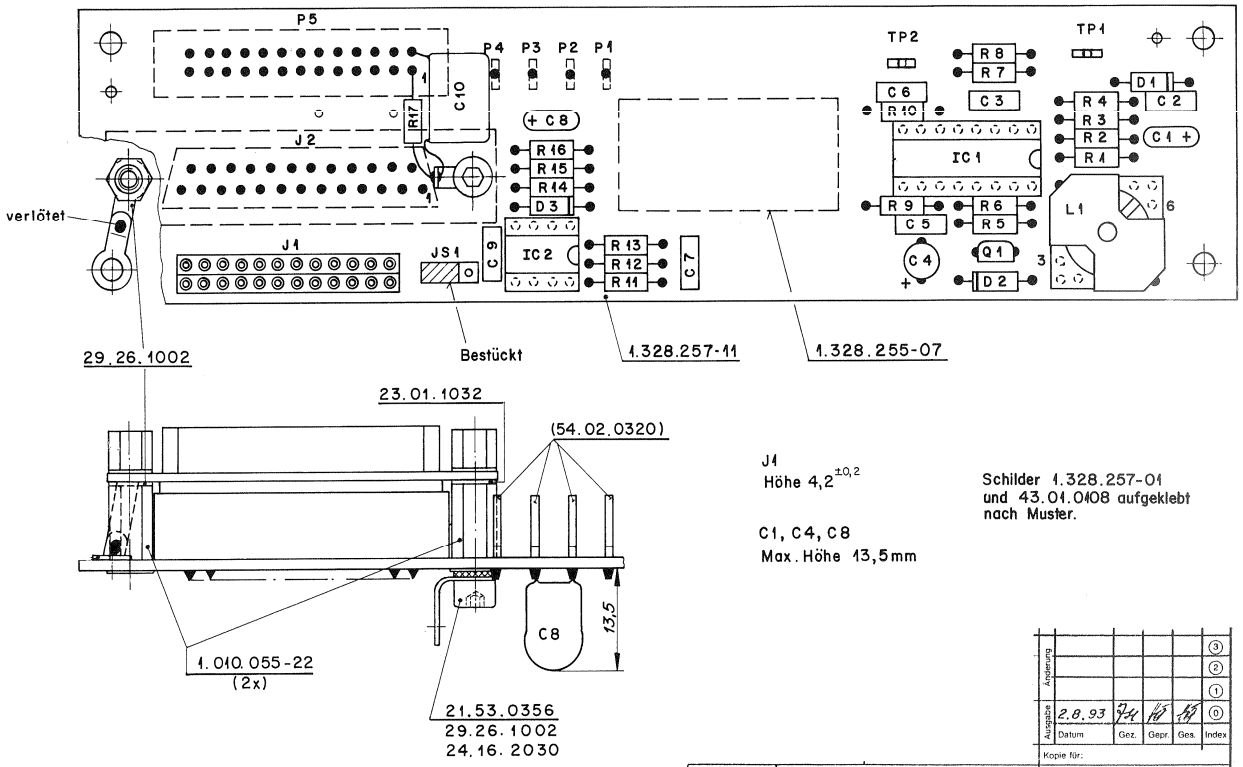

J1
Höhe $4,2^{\pm 0,2}$

C1, C4, C8
Max. Höhe 13,5mm

Schilder 1.328.257-01
und 43.01.0408 aufgeklebt
nach Muster.

Änderung					
Ausgabe	Datum	Gez.	Gepr.	Ges.	Index
	2.8.93				0

Kopie für:

STUDER REGENSDORF ZÜRICH	Benennung: CONNECTOR BOARD ESE	Nummer: 1.328.257-81

Ad	..POS..	...REF.No...	DESCRIPTION	MANUFACTURER
	C.....1	59.26.0680	68 u 20%, 6.3V , SAL	
	C.....2	59.06.0683	0.068 u 10%, 63V , PETP	
	C.....3	59.06.0104	0.1 u 10%, 63V , PETP	
	C.....4	59.22.6220	22 u -20%, 35V , EL	
	C.....5	59.06.0223	0.022 u 10%, 63V , PETP	
	C.....6	59.06.0472	4700 p 10%, 63V , PETP	
	C.....7	59.06.0102	1000 p 10%, 63V , PETP	
	C.....8	59.26.2100	10 u 20%, 16V , SAL	
	C.....9	59.06.0683	0.068 u 10%, 63V , PETP	
	C....10	59.03.2104	0.1 u 10%, 160V , PETP	
	D.....1	50.04.1118	BZX 6V2 5%, 6.2 V, 0.40 W, Z,	
	D.....2	50.04.0512	1 N 5818 Schottky	Mot.
	D.....3	50.04.0125	1 N 4448 75 V; 100 mA; Si.	
	IC....1	50.05.0279	IP 3524 B Regulating pulse width modulator	IPS.
	IC....2	50.05.0283	LM 393 N Dual low power comparator	TI.
	J.....1	53.03.0218	2 * 12 Pin Socket terminal strip	
	J.....2	54.13.0023	D-type, 25 pin print female connector	
	JS....1	54.01.0021	2 * 0.63 Jumper (See Note 1)	
	L.....1	1.022.197.00	1,5 mH Choke	St.
	P.....1	54.02.0320	2.8 * 0.8 Soldering pin	
	P.....2	54.02.0320	2.8 * 0.8 Soldering pin	
	P.....3	54.02.0320	2.8 * 0.8 Soldering pin	
	P.....4	54.02.0320	2.8 * 0.8 Soldering pin	
	P.....5	54.14.2003	26 Pin print male connector	
	Q.....1	50.03.0352	ZTX 751 S 60 V, 2 A, PNP Si.	Fe.
	R.....1	57.11.3222	2.2 k 1%, 0207 , MF	
	R.....2	57.11.3101	100 1%, 0207 , MF	
	R.....3	57.11.3101	100 1%, 0207 , MF	
	R.....4	57.11.3399	3.9 1%, 0207 , MF	
	R.....5	57.11.3101	100 1%, 0207 , MF	
	R.....6	57.11.3102	1.0 k 1%, 0207 , MF	
	R.....7	57.11.3472	4.7 k 1%, 0207 , MF	
	R.....8	57.11.3472	4.7 k 1%, 0207 , MF	
	R.....9	57.11.3392	3.9 k 1%, 0207 , MF	
	R....10	57.11.3222	2.2 k 1%, 0207 , MF	
	R....11	57.11.3105	1 M 1%, 0207 , MF	
	R....12	57.11.3222	2.2 k 1%, 0207 , MF	
	R....13	57.11.3223	22 k 1%, 0207 , MF	
	R....14	57.11.3103	10 k 1%, 0207 , MF	
	R....15	57.11.3473	47 k 1%, 0207 , MF	
	R....16	57.11.3122	1.2 k 1%, 0207 , MF	
	R....17	57.11.3105	1 M 1%, 0207 , MF	
	TP....1	54.02.0320	2.8 * 0.8 Soldering pin	
	TP....2	54.02.0320	2.8 * 0.8 Soldering pin	
	W.....1	1.010.324.64	4.3 * 10.2 Bridge (not inserted)	

Note 1: Jumper
Contact Pin: Studer Nr. 54.01.0020
Berg Nr. 77 311-102-36
Philips Nr. 2422 062 43241
Fawag Nr. AS 1-034/058-36 G-0.75u Au
Bridge : Studer Nr. 54.01.0021
Berg Nr. 65 474-001
Philips Nr. 2422 024 88003
AMP Nr. 141 767-1

CER=Ceramic, EL=Electrolytic, MP=Metallized Paper, MPC=Metallized Polycarbonate, MPETP=Metallized Polyester, PC=Polycarbonate, PETP=Polyester PP=Polypropylene, PS=Polystyrol, SAL=Solid Aluminium, TA=Tantal Cermet=Ceramic Metal, MF=Metal Film.

MANUFACTURERS :
Fe = Ferranti
IPS = Integrated Power Semiconductors Limited
Mot = Motorola
St = Studer
TI = Texas Instruments

1.328.257.81 CONNECTORS BOARD GP 93/08/0200

END

REMOTE TIMER (RS232) 1.328.275.00

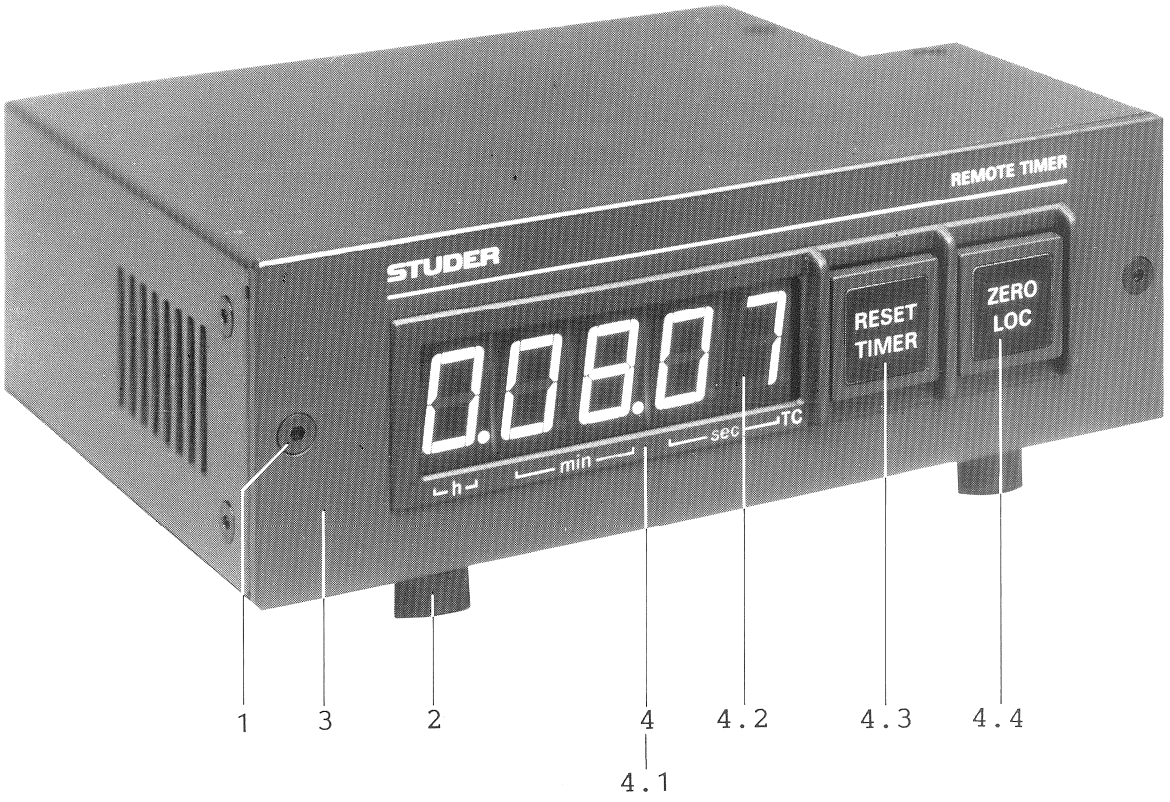

REMOTE TIMER (RS232) 1.328.275.00

Pos.	QTY.	Order Number	Part Name Specification
1	17 2	1.010.045.21 21.51.23.54	Countersunk allen screw, blk M3 x 6 Countersunk allen screw, Ni M3 x 5
2	4	31.02.0211	Foot D16 x 6,5
3	1	1.328.275.01	Front cover
4 4.1 4.2 4.3 4.4 	1 1 1 1 1 1 1	1.810.253.00 1.810.303.01 1.810.303.02 1.011.210.14 1.011.210.01 1.011.210.15 1.011.210.01	Display cover compl. Display cover Glas pane Label ZERO TIMER Push button Label ZERO LOC Push button

ZUBEHÖR

ACCESSORIES

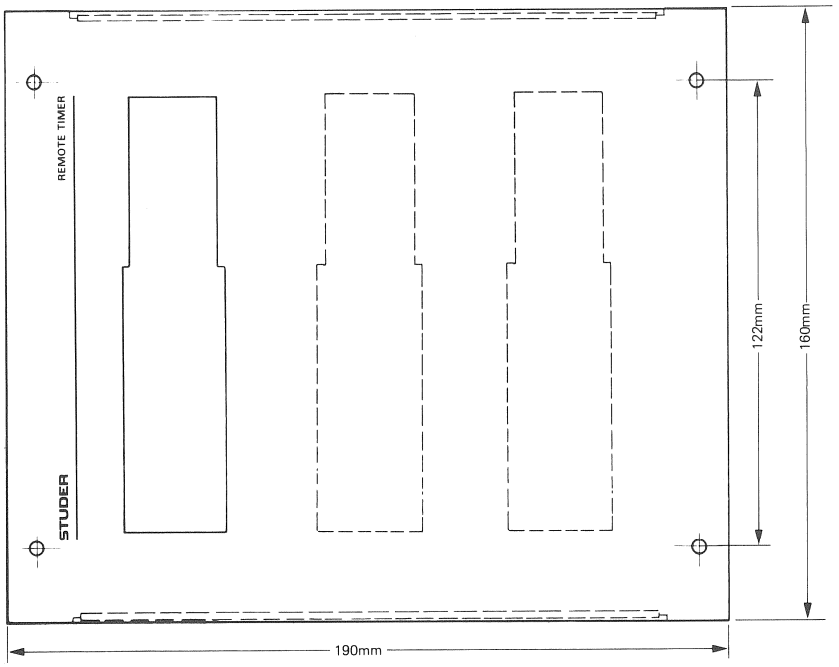

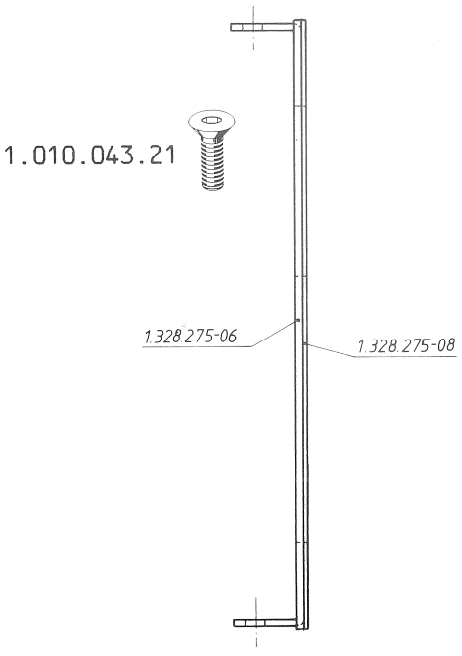

Pos.	QTY.	Order Number	Part Name Specification
9		1.328.275.31	Mounting frame for 1 counter
10		1.328.275.32	Mounting frame for 2 counter
11		1.328.275.33	Mounting frame for 3 counter

REMOTE TIMER (RS232) 1.328.275.00
-CPU BOARD 1.328.276.21

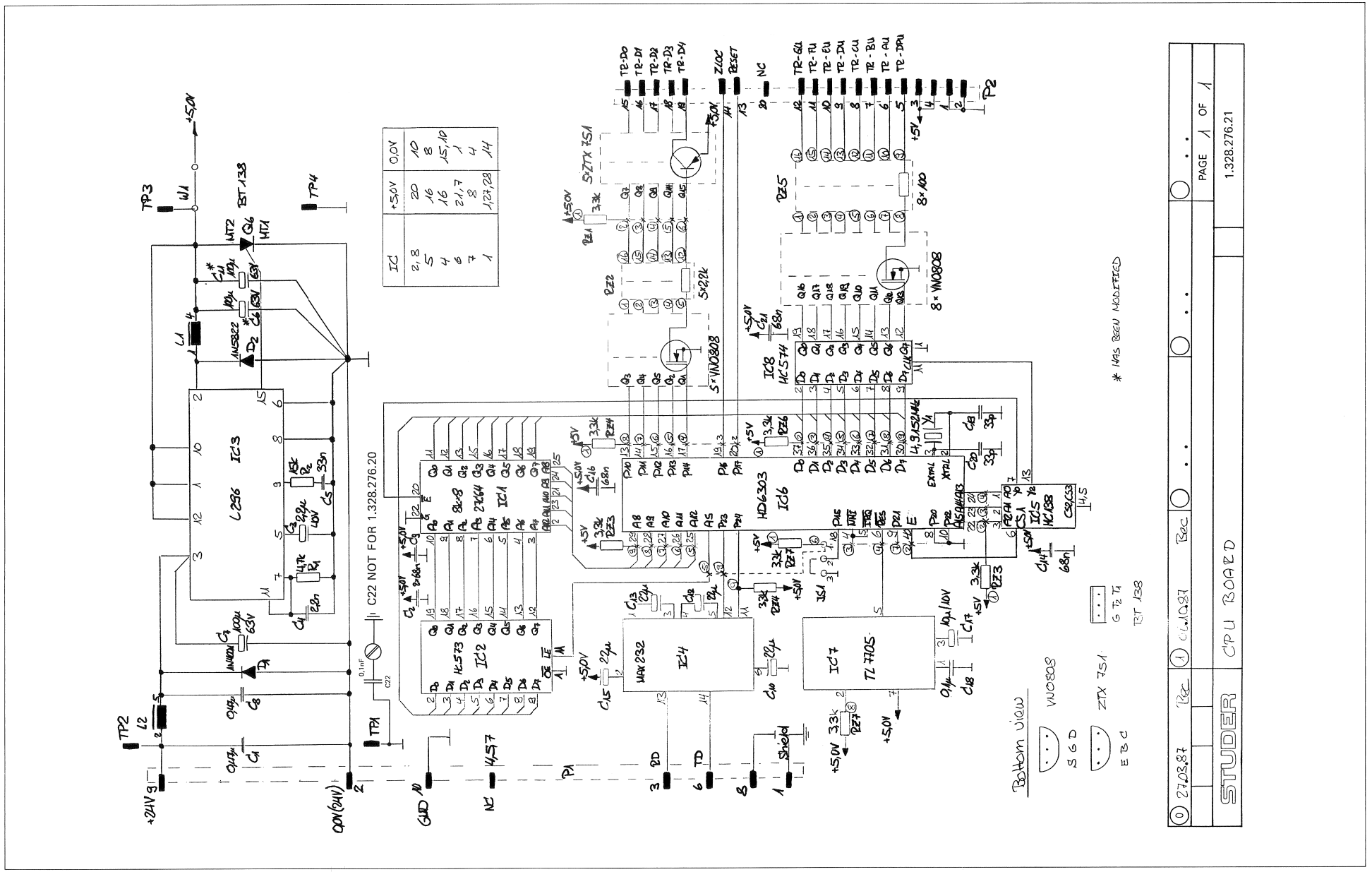

REMOTE TIMER (RS232) 1.328.275.00
-CPU BOARD 1.328.276.21

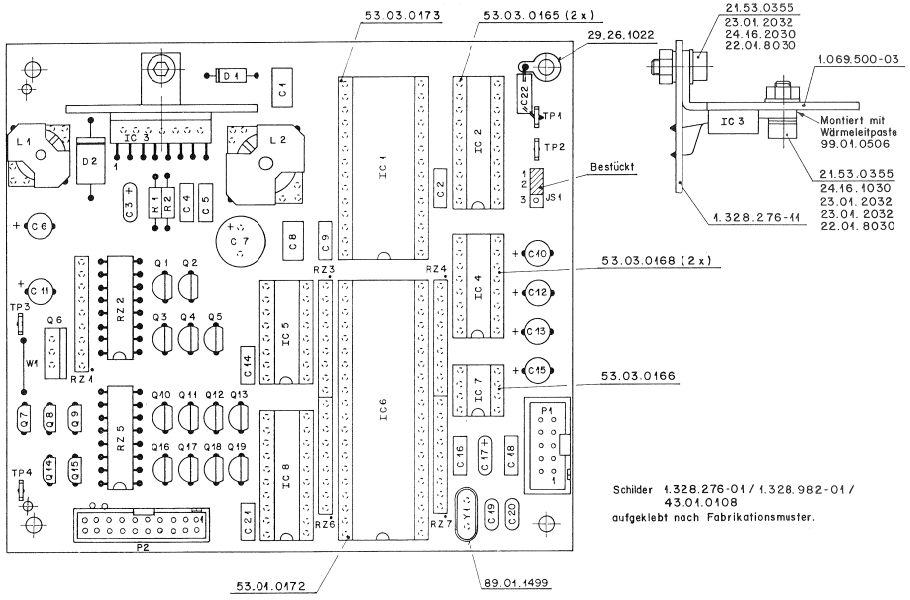

IND.	POS.NO.	PART NO.	VALUE	SPECIFICATIONS / EQUIVALENT	MANUF.
	C.....1	59.06.0474	.47 u	10%, 63V , PETP	
	C.....2	59.06.0683	.068 u	10%, 63V , PETP	
	C.....3	59.26.5229	2.2 u	20%, 25V , SAL	
	C.....4	59.06.0222	2200 p	10%, 63V , PETP	
	C.....5	59.06.0333	.033 u	10%, 63V , PETP	
	C.....6	59.22.3101	100 u	-20%, 10V , EL	
	C.....7	59.22.8101	100 u	-20%, 63V , EL	
	C.....8	59.06.0474	.47 u	10%, 63V , PETP	
	C.....9	59.06.0683	.068 u	10%, 63V , PETP	
	C....10	59.22.6220	22 u	-20%, 40V , EL	
	C....11	59.22.3101	100 u	-20%, 10V , EL	
	C....12	59.22.6220	22 u	-20%, 40V , EL	
	C....13	59.22.6220	22 u	-20%, 40V , EL	
	C....14	59.06.0683	.068 u	10%, 63V , PETP	
	C....15	59.22.6220	22 u	-20%, 40V , EL	
	C....16	59.06.0683	.068 u	10%, 63V , PETP	
	C....17	59.26.2100	10 u	20%, 16V , SAL	
	C....18	59.06.0104	.1 u	10%, 63V , PETP	
	C....19	59.34.2330	33 p	5%, N150 , CER	
	C....20	59.34.2330	33 p	5%, N150 , CER	
	C....21	59.06.0683	.068 u	10%, 63V , PETP	
	C....22	59.40.0104	.1 u	10%, 63V , PETP	
	D.....1	50.04.0122	1N 4001	50 V, 1 A, Si	
	D.....2	50.04.0519	1N 5822	40 V, 3 A, Schottky	
	IC....1	1.328.982.20		SW 50/87 REMOTE TIMER	St
	IC....2	50.17.1573	74 HC 573	3-state Octal D-Type Latch	
	IC....3	50.10.0110	L 296	Switching Voltage Regulator	SGS
	IC....4	50.15.0120	MAX 232CPE	RS 232 Transmitter/Receiver	MAX
	IC....5	50.17.1138	74 HC 138	1-of-8 Decoder/Demultiplexer	
	IC....6	50.16.0119	HD 63B03RFP	Microcomputer Unit CMOS, 8 Bit, 2 MHz	Hi
	IC....7	50.11.0122	TL 7705ACP	Reset Generator	TI
	IC....8	50.17.1574	74 HC 574	3-state Non Inverting Octal D-Type Flip-Flop	
	JS....1	54.01.0021	2 x 0.63	Jumper (bridging 2 of 3 pins 54.01.0020)	

IND.	POS.NO.	PART NO.	VALUE	SPECIFICATIONS / EQUIVALENT	MANUF.
	TP....1	54.02.0320	2.8 x 0.8	Straight Soldering Pin	
	TP....2	54.02.0320	2.8 x 0.8	Straight Soldering Pin	
	TP....3	54.02.0320	2.8 x 0.8	Straight Soldering Pin	
	TP....4	54.02.0320	2.8 x 0.8	Straight Soldering Pin	
	Y.....1	89.01.0560	4.9152 MHz		
	W.....1	1.010.324.64	4.3 x 10.2	Bridge	St

Suffix -21 : The capacitor C22 (0.1 uF) was added to the print to (03.06.91) protect it against HF perturbations.

CER=Ceramic, EL=Electrolytic, MP=Metallized Paper, MPC=Metallized Polycarbonate, MPETP=Metallized Polyester, PC=Polycarbonate, PETP=Polyester PP=Polypropylene, PS=Polystyrol, SAL=Solid Aluminium, TA=Tantal Cermet=Ceramic Metal, MF=Metal Film.

MANUFACTURERS :

Fe = Ferranti
Hi = Hitachi
MAX = MAXIM
Ph = Philips (incl. Valvo)
SGS = SGS Microelettronica Sp A
Six = Siliconix
St = Studer
TI = Texas Instruments

ORIG 91/06/03

IND.	POS.NO.	PART NO.	VALUE	SPECIFICATIONS / EQUIVALENT	MANUF.
	L.....1	1.022.191.00		Inductor	St
	L.....2	1.022.252.00	0.32 uH	Filter Coil, 0.4 A	St
	P.....1	54.14.2001	2 x 5 Pin	Straight Print Male Connector	
	P.....2	54.14.2008	2 x 10 Pin	Straight Print Male Connector	
	Q.....1	50.03.1505	VN 0808 M	80 V, 0.35 A, FET N-Channel	Six
	Q.....2	50.03.1505	VN 0808 M	80 V, 0.35 A, FET N-Channel	Six
	Q.....3	50.03.1505	VN 0808 M	80 V, 0.35 A, FET N-Channel	Six
	Q.....4	50.03.1505	VN 0808 M	80 V, 0.35 A, FET N-Channel	Six
	Q.....5	50.03.1505	VN 0808 M	80 V, 0.35 A, FET N-Channel	Six
	Q.....6	50.99.0106	BT 138	400 V, 8 A, TRIAC	Ph
	Q.....7	50.03.0352	ZTX 751 S	60 V, 2 A, PNP Si	Fe
	Q.....8	50.03.0352	ZTX 751 S	60 V, 2 A, PNP Si	Fe
	Q.....9	50.03.0352	ZTX 751 S	60 V, 2 A, PNP Si	Fe
	Q....10	50.03.1505	VN 0808 M	80 V, 0.35 A, FET N-Channel	Fe
	Q....11	50.03.1505	VN 0808 M	80 V, 0.35 A, FET N-Channel	Fe
	Q....12	50.03.1505	VN 0808 M	80 V, 0.35 A, FET N-Channel	Fe
	Q....13	50.03.1505	VN 0808 M	80 V, 0.35 A, FET N-Channel	Fe
	Q....14	50.03.0352	ZTX 751 S	60 V, 2 A, PNP Si	Fe
	Q....15	50.03.0352	ZTX 751 S	60 V, 2 A, PNP Si	Fe
	Q....16	50.03.1505	VN 0808 M	80 V, 0.35 A, FET N-Channel	Six
	Q....17	50.03.1505	VN 0808 M	80 V, 0.35 A, FET N-Channel	Six
	Q....18	50.03.1505	VN 0808 M	80 V, 0.35 A, FET N-Channel	Six
	Q....19	50.03.1505	VN 0808 M	80 V, 0.35 A, FET N-Channel	Six
	R.....1	57.11.4472	4.7 k	2%, 0207 , MF	
	R.....2	57.11.4153	15 k	2%, 0207 , MF	
	RZ....1	57.88.4332	8 x 3.3 k	2%, SIP 9	
	RZ....2	57.88.3222	8 x 2.2 k	2%, DIL 16	
	RZ....3	57.88.4332	8 x 3.3 k	2%, SIP 9	
	RZ....4	57.88.4332	8 x 3.3 k	2%, SIP 9	
	RZ....5	57.88.3101	8 x 100	2%, DIL 16	
	RZ....6	57.88.4332	8 x 3.3 k	2%, SIP 9	
	RZ....7	57.88.4332	8 x 3.3 k	2%, SIP 9	

REMOTE TIMER (RS232) 1.328.275.00
-DISPLAY BOARD 1.328.277.00

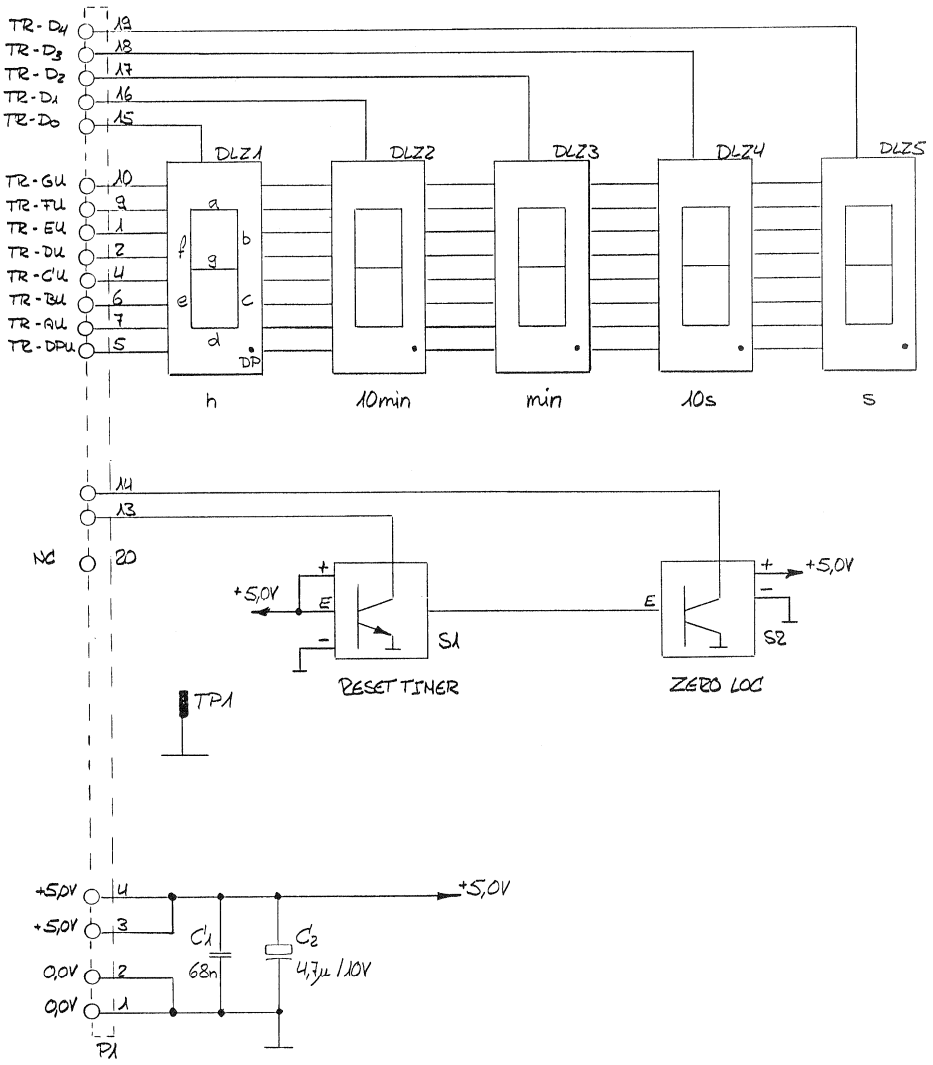

0 10.04.87 Bec				
				PAGE 1 OF 1
STUDER	DISPLAY BOARD			1.328.277-00

REMOTE TIMER (RS232) 1.328.275.00
-DISPLAY BOARD 1.328.277.00

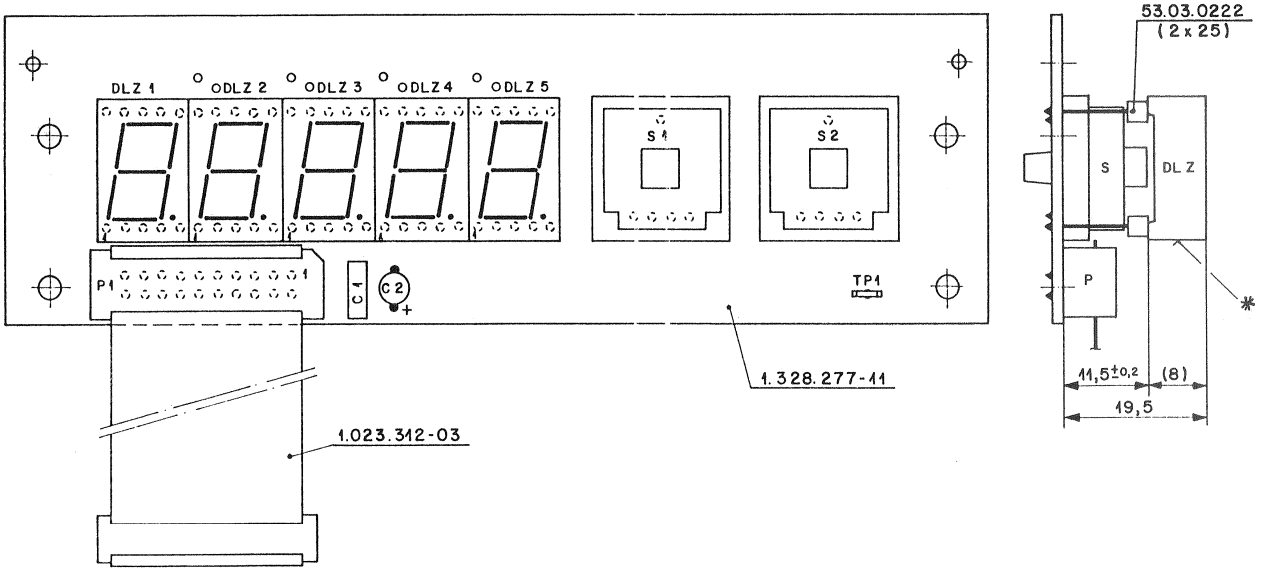

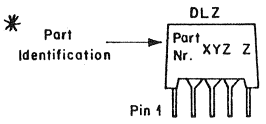

IND.	POS.NO.	PART NO.	VALUE	SPECIFICATIONS / EQUIVALENT	MANUF.
	C.....1	59.06.0683	.068 u	10%, 63V, PETP	
	C.....2	59.26.1479	4.7 u	20%, 10V, SAL	
	DLZ...1	73.01.0124	MAN 6660	7-Segm. orange LED display, common anode	GI
	DLZ...2	73.01.0124	MAN 6660	7-Segm. orange LED display, common anode	GI
	DLZ...3	73.01.0124	MAN 6660	7-Segm. orange LED display, common anode	GI
	DLZ...4	73.01.0124	MAN 6660	7-Segm. orange LED display, common anode	GI
	DLZ...5	73.01.0124	MAN 6660	7-Segm. orange LED display, common anode	GI
	P.....1			see Note 2	
	S.....1	55.03.0261	RS 76 C	Momentary Key Switch 1 * OC	Rf
	S.....2	55.03.0261	RS 76 C	Momentary Key Switch 1 * OC	Rf
	TP....1	54.02.0320	2.8 * 0.8	Straight soldering pin	

Index 01 : Part #53.03.0228 replaces part #53.03.0222
(10.11.88)

(01) Note 1 : All DLZ devices are plugged into socket terminal strips
#53.03.0228 (2 * 5 sockets for each device).
Note 2 : Print connector 54.14.5034 of the 20-connductors ribbon
cable #1.023.312.03 is soldered on print.

PETP=Polyester, SAL=Solid Aluminium

MANUFACTURERS :
GI = General Instruments
Rf = Rafi

ORIG 88/11/10

S T U D E R (01) 88/11/10 CM DISPLAY BOARD PL 1.328.277-00 PAGE 1

VARISPEED FOR REMOTE CONTROL ONLY 1.328.253.00
VARISPEED CONTROL MODULE 1.328.290.00

1.328.253.00

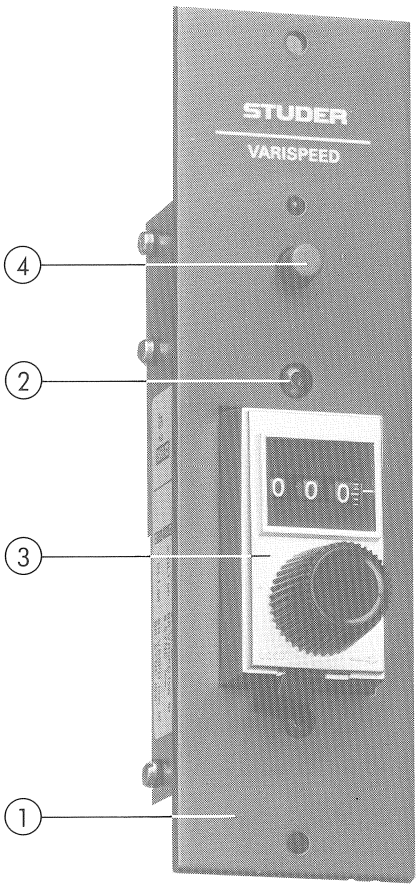

1.328.290.00

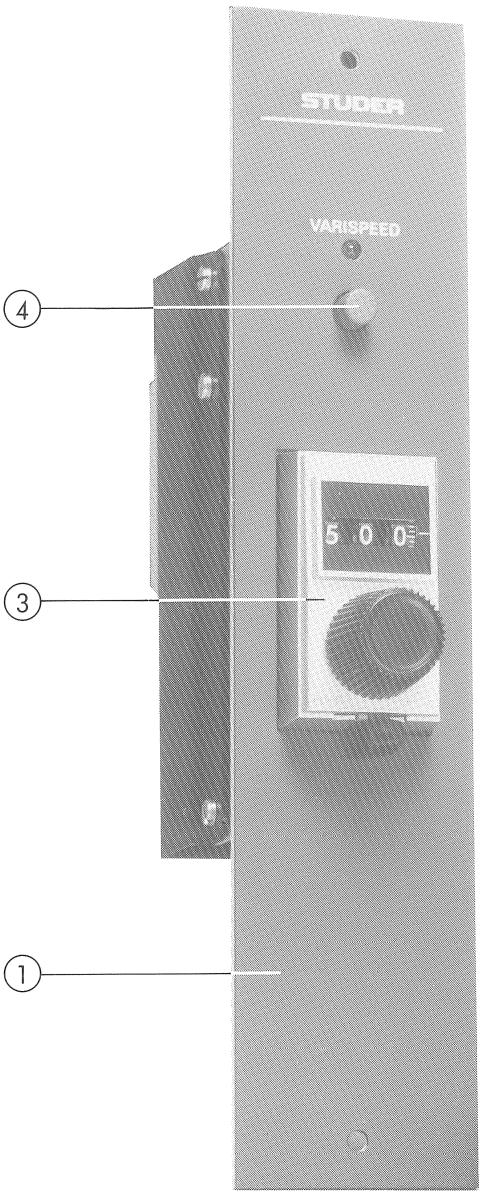

VARISPEED FOR REMOTE CONTROL ONLY 1.328.253.00
VARISPEED CONTROL MODULE 1.328.290.00

Pos.	QTY.	Order Number	Part Name	Specification
	1	1.328.253.00	Varispeed conversion kit (for parallel remote control only)	
	1	1.328.290.00	Varispeed control module	
	1	1.810.762.82	VARISPEED CONTROL PCB	
	3 3 1	21.01.0279 24.16.1025 1.328.290.04	Pan-head screw, slotted Fin washer Insulation	M2.5 x 6
1	1 1 1 1	1.328.250.10 1.810.330.02 1.328.290.01 1.328.290.02	Front cover (short) Spacer Support Front plate	
1	1	1.328.290.02	Front cover (long)	
2	2	1.010.025.21	Oval head allen screw	M3 x 6
3	1	58.99.0116	Varispeed set unit	
4	1	1.810.320.07	Push button, long	red

VARISPEED FOR REMOTE CONTROL ONLY 1.328.253.00
VARISPEED CONTROL MODULE 1.328.290.00
-VARISPEED CONTROL PCB 1.810.762.82

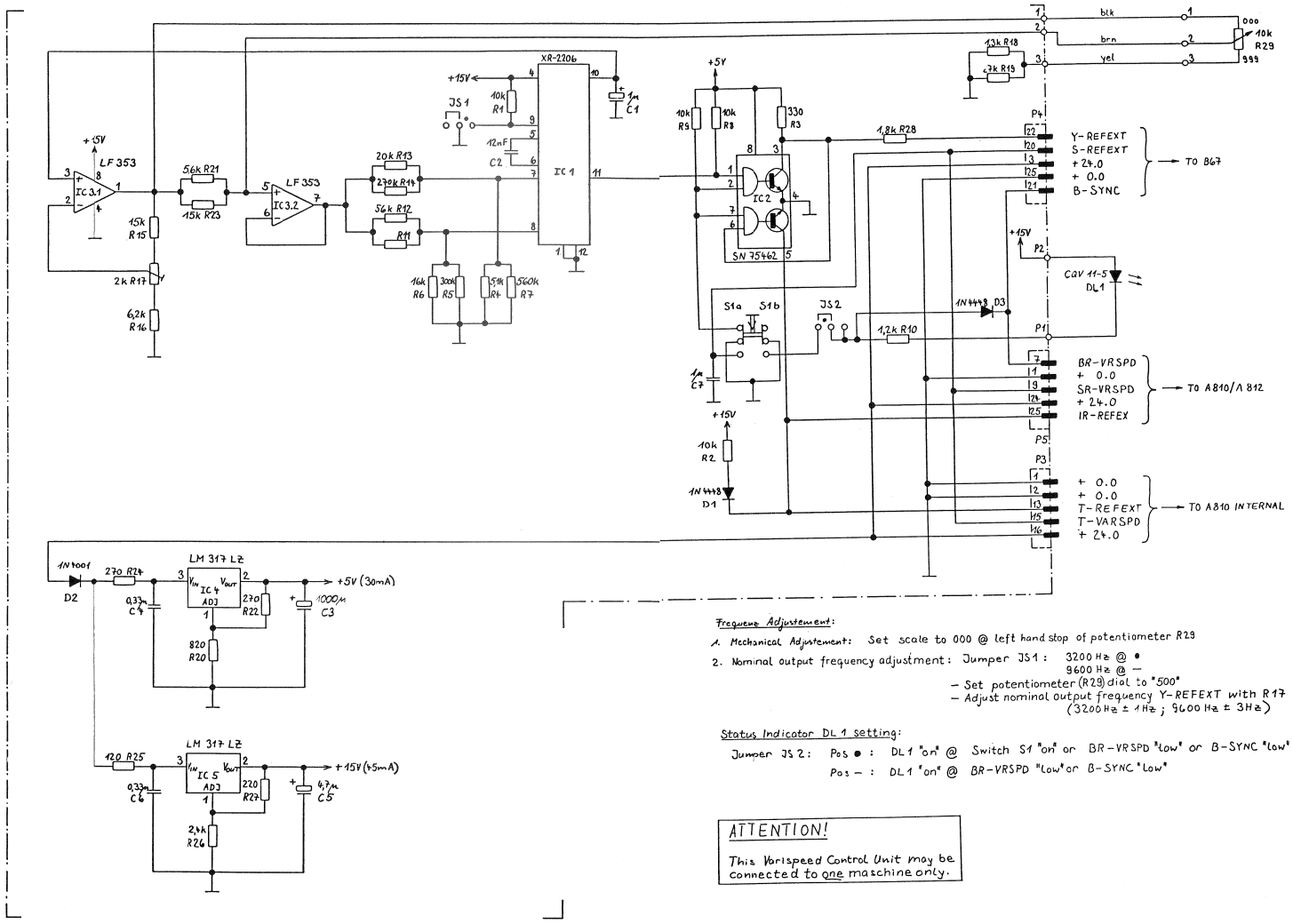

Frequenz Adjustement:

1. Mechanical Adjustement: Set scale to 000 @ left hand stop of potentiometer R29
2. Nominal output frequency adjustment: Jumper JS1: 3200 Hz @ •
   9600 Hz @ —
   - Set potentiometer (R29) dial to "500"
   - Adjust nominal output frequency Y-REFEXT with R17 (3200 Hz ± 1 Hz ; 9600 Hz ± 3 Hz)

Status Indicator DL 1 setting:

Jumper JS 2: Pos • : DL 1 "on" @ Switch S1 "on" or BR-VRSPD "Low" or B-SYNC "Low"
Pos — : DL 1 "on" @ BR-VRSPD "Low" or B-SYNC "Low"

ATTENTION!

This Varispeed Control Unit may be connected to one maschine only.

0 07.02.84 LN				PAGE 1 OF 1
STUDER	Varispeed Control Board		SC	1.810.762.82

VARISPEED FOR REMOTE CONTROL ONLY 1.328.253.00
VARISPEED CONTROL MODULE 1.328.290.00
-VARISPEED CONTROL PCB 1.810.762.82

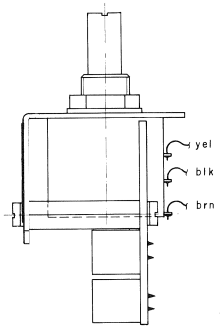

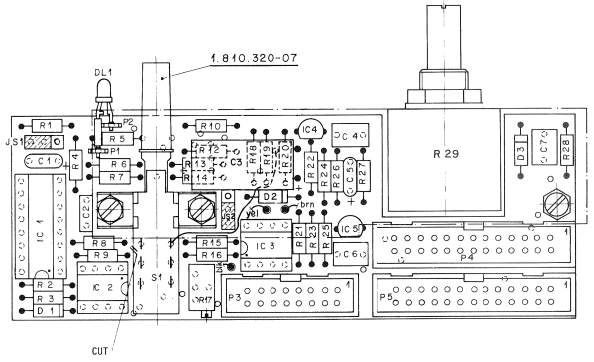

IND.	POS.NO.	PART NO.	VALUE	SPECIFICATIONS / EQUIVALENT	MANUF.
	C..0001	59.26.9109	1 uF	20%, 40V , Sal	Ph
	C..0002	59.99.0220	12 nF	5%, 50V , Cer see note 1	
	C..0003	59.99.1700	1000 uF	6.3V L < 21mm D < 10mm	
	C..0004	59.06.0334	0.33uF	10%, 63V , Petp	
	C..0005	59.26.5479	4.7 uF	20%, 25V , Sal	Ph
	C..0006	59.06.0334	0.33uF	10%, 63V , Petp	
	C..0007	59.06.5105	1uF	10%, 50V , Petp	
	D..0001	50.04.0125	1N 4448		Ph+Ses+ITT+Fc+Tf
	D..0002	50.04.0122	1N 4001		Mot+GI+Sol
	D..0003	50.04.0125	1N 4448		Ph+Ses+ITT+Fc+Tf
	DL.0001	50.04.2129	CQV11-7		Sie
	IC.0001	50.11.0108	XR2206CP	SG 2206	Ex
	IC.0002	50.05.0227	SN75462P		TI
	IC.0003	50.09.0101	LF 353N	TL 072CP	TI+NS+Mot
	IC.0004	50.10.0108	LM317LZ		Nat+Mot
	IC.0005	50.10.0108	LM317LZ		Nat+Mot
	JS.0001	54.01.0020	Pin (3P)	54.01.0021 Bridge (1P) see note 2	
	JS.0002	54.01.0020	Pin (3P)	54.01.0021 Bridge (1P) see note 2	
	P..0001	54.02.0320		2.8*0.8	
	P..0002	54.02.0320		2.8*0.8	
	P..0003	54.14.2002		16-contacts see note 3	
	P..0004	54.14.2003		26-contacts see note 4	
	P..0005	54.14.2003		26-contacts see note 4	
	R..0001	57.11.4103	10 kOhm	5%	
	R..0002	57.11.4103	10 kOhm	5%	
	R..0003	57.11.4331	330 Ohm	5%	
	R..0004	57.11.3512	5.1 kOhm	1%	
	R..0005	57.11.3304	300 kOhm	5%	
	R..0006	57.11.3163	16 kOhm	1%	
	R..0007	57.11.4564	560 kOhm	5%	
	R..0008	57.11.4103	10 kOhm	5%	

IND.	POS.NO.	PART NO.	VALUE	SPECIFICATIONS / EQUIVALENT	MANUF.
	R..0009	57.11.4103	10 kOhm	5%	
	R..0010	57.11.4122	1.2 kOhm	5%	
	R..0011		not used		
	R..0012	57.11.3563	56 kOhm	1%	
	R..0013	57.11.3203	20 kOhm	1%	
	R..0014	57.11.4274	270 kOhm	5%	
	R..0015	57.11.3153	15 kOhm	1%	
	R..0016	57.11.3622	6.2 kOhm	1%	
	R..0017	58.05.0202	2 kOhm	25 turns	
	R..0018	57.11.3132	1.3 kOhm	1%	
	R..0019	57.11.4273	27 kOhm	5%	
	R..0020	57.11.3821	820 Ohm	1%	
	R..0021	57.11.3562	5.6 kOhm	1%	
	R..0022	57.11.3271	270 Ohm	1%	
	R..0023	57.11.3153	15 kOhm	1%	
	R..0024	57.11.3271	270 Ohm	1%	
	R..0025	57.11.4121	120 Ohm	5%	
	R..0026	57.11.3242	2.4 kOhm	1%	
	R..0027	57.11.3221	220 Ohm	1%	
	R..0028	57.11.4182	1.8 kOhm	5%	
	R..0029	58.99.0123	10 kOhm	10 turns	
	S..0001	1.177.100.07		Switch	St

IND.	POS.NO.	PART NO.	VALUE	SPECIFICATIONS / EQUIVALENT	MANUF.

Note 1: 12nF,50V: Centralab Nr. CN 40 C 123 J
Siemens Nr. B 37 983 - J - 5123 - J
Komet Nr. C 062 S 123 J 5 G S CA

Note 2: Contact pin: Berg Nr. 75160-102-36
Philips Nr. 2422 025 89303
Bridge: Berg Nr. 65474-001
AMP Nr. 141767-1
Philips Nr. 2422 024 88003

Note 3: 16-contacts: Yamaichi Nr. FAP-16-08//4
Burndy Nr. BPH 9 B 16 800 GS

Note 4: 26-contacts: Yamaichi Nr. FAP-26-08//4
Burndy Nr. BPH 9 B 26 800 GS

Manufacturer: Ex=Exar, Fc=Fairchild, GI=General Instruments,
ITT=Intermetall, Mot=Motorola, Nat=National(Matsushita)
NS=National Semiconductors, Ph=Philips,
Ses=Sescosem, Sie=Siemens, Sol=Solitron,
St=Studer, Tf=Telefunken, TI=Texas Instrument

DRIG 85/07/09

VARISPEED FOR REMOTE CONTROL ONLY 1.328.253.00
VARISPEED CONTROL MODULE 1.328.290.00
-VARISPEED CONTROL PCB 1.810.762.83

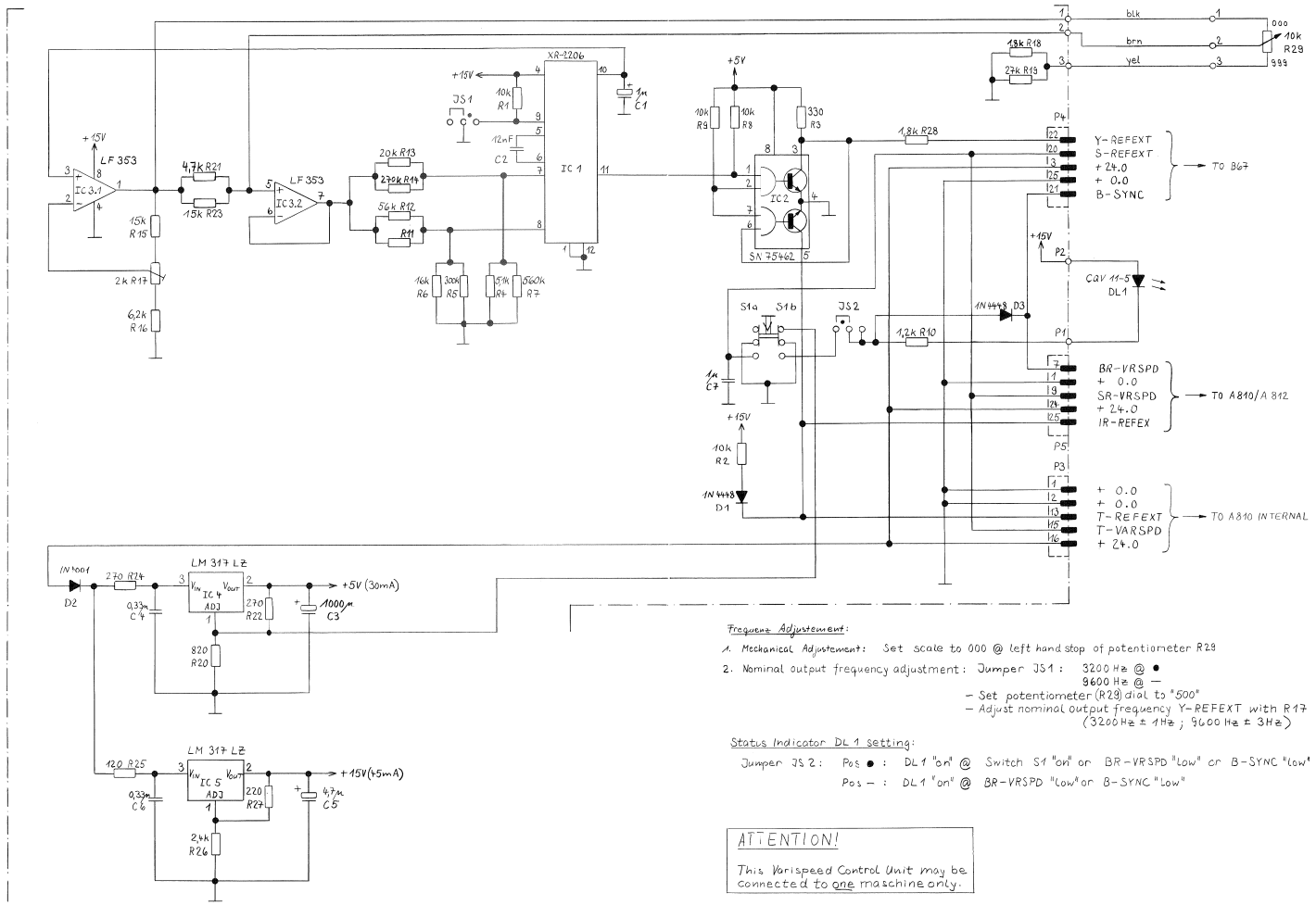

Frequenz Adjustement:

1. Mechanical Adjustement: Set scale to 000 @ left hand stop of potentiometer R29
2. Nominal output frequency adjustment: Jumper JS1: 3200 Hz @ ●
   9600 Hz @ —
   - Set potentiometer (R29) dial to "500"
   - Adjust nominal output frequency Y-REFEXT with R17 (3200 Hz ± 1Hz ; 9600 Hz ± 3Hz)

Status Indicator DL 1 setting:

Jumper JS 2: Pos ● : DL 1 "on" @ Switch S1 "on" or BR-VRSPD "Low" or B-SYNC "Low"
Pos — : DL 1 "on" @ BR-VRSPD "Low" or B-SYNC "Low"

ATTENTION!

This Varispeed Control Unit may be connected to one maschine only.

0 17.09.90 ZB	. .	. .	. .	. .
				PAGE 1 OF 1
STUDER	Varispeed Control Board		SC	1.810.762.83

VARISPEED FOR REMOTE CONTROL ONLY 1.328.253.00
VARISPEED CONTROL MODULE 1.328.290.00
-VARISPEED CONTROL PCB 1.810.762.83

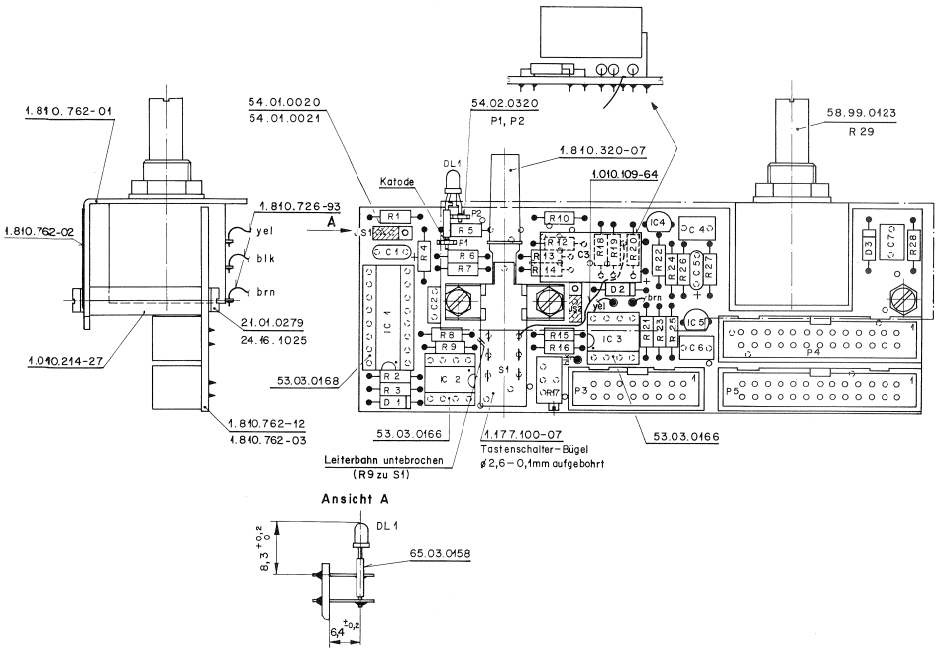

IND.	POS.NO.	PART NO.	VALUE	SPECIFICATIONS / EQUIVALENT	MANUF.
	C.....1	59.26.9109	1 uF	20%, 40V , Sal	Ph
	C.....2	59.99.0220	12 nF	5%, 50V , Cer see note 1	
	C.....3	59.99.1700	1000 uF	6.3V L < 21mm D < 10mm	
	C.....4	59.06.0334	0.33uF	10%, 63V , Petp	
	C.....5	59.26.5479	4.7 uF	20%, 25V , Sal	Ph
	C.....6	59.06.0334	0.33uF	10%, 63V , Petp	
	C.....7	59.06.5105	1uF	10%, 50V , Petp	
	D.....1	50.04.0125	1N 4448		Ph,Ses,ITT,Fc,Tf
	D.....2	50.04.0122	1N 4001		Mot,GI,Sol
	D.....3	50.04.0125	1N 4448		Ph,Ses,ITT,Fc,Tf
	DL....1	50.04.2129	CQV11-7		Sie
	IC....1	50.11.0108	XR2206CP	SG 2206	Ex
	IC....2	50.05.0227	SN75462P		TI
	IC....3	50.09.0101	LF 353N	TL 072CP	TI,NS,Mot
	IC....4	50.10.0108	LM317LZ		Nat,Mot
	IC....5	50.10.0108	LM317LZ		Nat,Mot
	JS....1	54.01.0020	Pin (3+)	54.01.0021 Bridge (1+) see note 2	
	JS....2	54.01.0020	Pin (3+)	54.01.0021 Bridge (1+) see note 2	
	P.....1	54.02.0320		2.8+0.8	
	P.....2	54.02.0320		2.8+0.8	
	P.....3	54.14.2102		16-contacts see note 3	
	P.....4	54.14.2003		26-contacts see note 4	
	P.....5	54.14.2003		26-contacts see note 4	
	R.....1	57.11.3103	10 kOhm	5%	
	R.....2	57.11.3103	10 kOhm	5%	
	R.....3	57.11.3331	330 Ohm	5%	
	R.....4	57.11.3512	5.1 kOhm	1%	
	R.....5	57.11.3304	300 kOhm	5%	
	R.....6	57.11.3163	16 kOhm	1%	
	R.....7	57.11.3564	560 kOhm	5%	
	R.....8	57.11.3103	10 kOhm	5%	

IND.	POS.NO.	PART NO.	VALUE	SPECIFICATIONS / EQUIVALENT	MANUF.
	R.....9	57.11.3103	10 kOhm	5%	
	R.....10	57.11.3122	1.2 kOhm	5%	
	R.....11		not used		
	R.....12	57.11.3563	56 kOhm	1%	
	R.....13	57.11.3203	20 kOhm	1%	
	R.....14	57.11.3274	270 kOhm	5%	
	R.....15	57.11.3153	15 kOhm	5%	
	R.....16	57.11.3622	6.2 kOhm	5%	
	R.....17	58.05.0202	2 kOhm	25 turns	
	R.....18	57.11.3182	1.8 kOhm	1%	
	R.....19	57.11.3273	27 kOhm	5%	
	R.....20	57.11.3821	820 Ohm	1%	
	R.....21	57.11.3472	4.7 kOhm	1%	
	R.....22	57.11.3271	270 Ohm	1%	
	R.....23	57.11.3153	15 kOhm	1%	
	R.....24	57.11.3271	270 Ohm	5%	
	R.....25	57.11.3121	120 Ohm	5%	
	R.....26	57.11.3242	2.4 kOhm	1%	
	R.....27	57.11.3221	220 Ohm	1%	
	R.....28	57.11.3182	1.8 kOhm	5%	
	R.....29	58.99.0123	10 kOhm	10 turns	
	S.....1	1.177.100.07		Switch	St

IND.	POS.NO.	PART NO.	VALUE	SPECIFICATIONS / EQUIVALENT	MANUF.

Note 1: 12nF/50V: Centralab Nr. CN 40 C 123 J
Siemens Nr. B 37 983 - J - 5123 - J
Kemet Nr. C 062 S 123 J 5 G 5 CA

Note 2: Contact pin: Berg Nr. 75160-102-36
Philips Nr. 2422 025 89303
Bridge: Berg Nr. 65474-001
AMP Nr. 141767-1
Philips Nr. 2422 024 88003

Note 3: 16-contacts: Siemens Nr. V23535-A2700-A162
Thomas+Betts 501-1627 ES

Note 4: 26-contacts: Yamaichi Nr. FAP-26-08/4
Burndy Nr. BPH 9 B 26 B00 GS

Manufacturer: Ex=Exar, Fc=Fairchild, GI=General Instruments,
ITT=Intermetall, Mot=Motorola, Nat=National(Matsusita)
NS=National Semiconductors, Ph=Philips,
Ses=Seecosem, Sie=Siemens, Sol=Solitron,
St=Studer, Tf=Telefunken, TI=Texas Instrument

ORIG 90/10/05

VARISPEED CONTROLLER 1.328.280.00

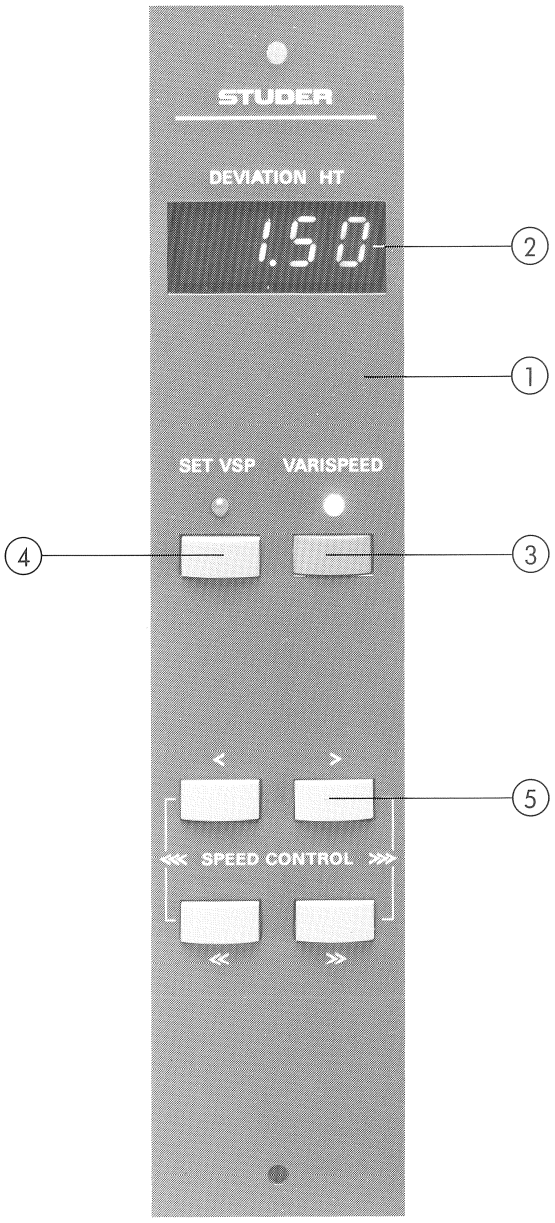

VARISPEED CONTROLLER 1.328.280.00

Pos.	QTY.	Order Number	Part Name	Specification
	1	1.328.280.00	Varispeed Controller	
	1	1.328.281.00	Varispeed Display-and Keyboard	
	1	1.328.282.20	Varispeed Main Board	
	1	1.328.283.00	Varispeed Connector Board	
1	1	1.328.280.01	Front cover	
2	1	1.328.280.03	Glas pane	
3	1	55.15.0122	Push button	red
4	1	55.15.0123	Push button	orange
5	1	55.15.0128	Push button	grey

VARISPEED CONTROLLER 1.328.280.00
-VARISPEED DISPLAY AND KEYBOARD 1.328.281.00

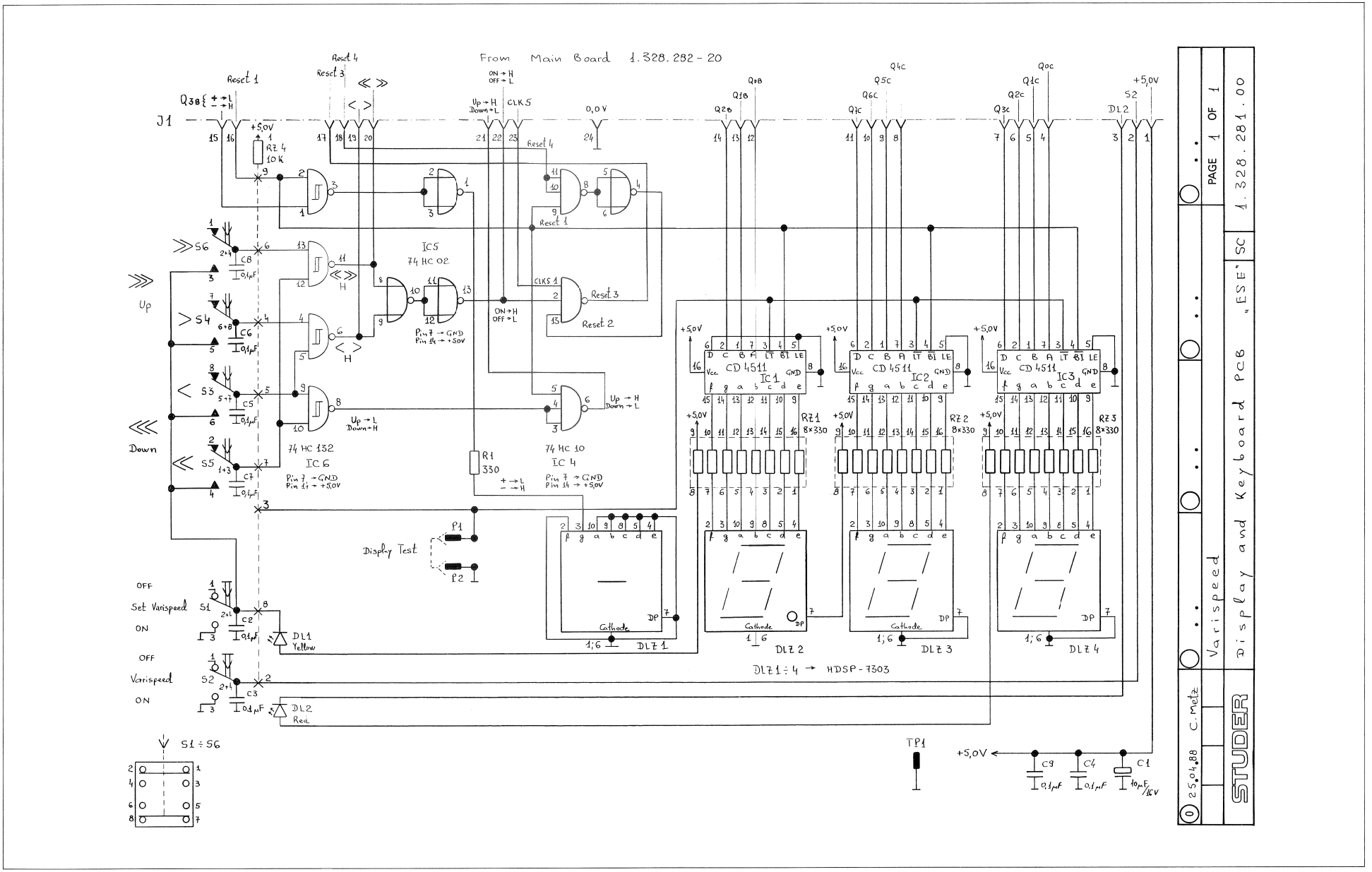

VARISPEED CONTROLLER 1.328.280.00
-VARISPEED DISPLAY AND KEYBOARD 1.328.281.00

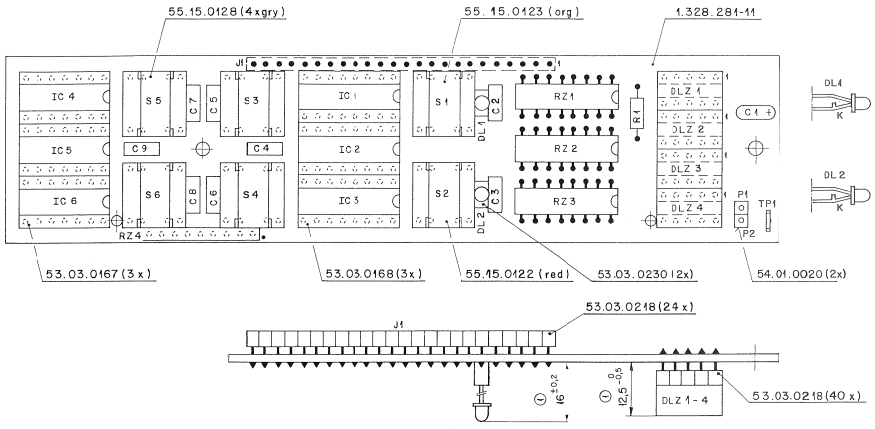

IND.	POS.NO.	PART NO.	VALUE	SPECIFICATIONS / EQUIVALENT	MANUF.
	C.....1	59.26.2100	10 u	20%, 16V • SAL	
	C.....2	59.06.0104	.1 u	10%, 63V • PETP	
	C.....3	59.06.0104	.1 u	10%, 63V • PETP	
	C.....4	59.06.0104	.1 u	10%, 63V • PETP	
	C.....5	59.06.0104	.1 u	10%, 63V • PETP	
	C.....6	59.06.0104	.1 u	10%, 63V • PETP	
	C.....7	59.06.0104	.1 u	10%, 63V • PETP	
	C.....8	59.06.0104	.1 u	10%, 63V • PETP	
	C.....9	59.06.0104	.1 u	10%, 63V • PETP	
	DL....1	50.04.2130	LY 3160	Diffused yellow.	Sie.
	DL....2	50.04.2129	LS 3160	Diffused red.	Sie.
	DLZ...1	73.01.0128	4DSP-7303	Red Micro-Bright 7 Seg. Display, 7.6 mm. HP.	
	DLZ...2	73.01.0128	4DSP-7303	Red Micro-Bright 7 Seg. Display, 7.6 mm. HP.	
	DLZ...3	73.01.0128	4DSP-7303	Red Micro-Bright 7 Seg. Display, 7.6 mm. HP.	
	DLZ...4	73.01.0128	4DSP-7303	Red Micro-Bright 7 Seg. Display, 7.6 mm. HP.	
	IC....1	50.07.0511	CD 4511	BCD-to-7 Seg. Latch/Decoder/Driver.	
	IC....2	50.07.0511	CD 4511	BCD-to-7 Seg. Latch/Decoder/Driver.	
	IC....3	50.07.0511	CD 4511	BCD-to-7 Seg. Latch/Decoder/Driver.	
	IC....4	50.17.1010	74 HC 10	Triple 3-Input NAND Gate.	
	IC....5	50.17.1002	74 HC 02	Quad 2-Input NOR Gate.	
	IC....6	50.17.1132	74 HC 132	Quad 2-Input Schmitt Trigger NAND Gate.	
	J.....1	53.03.0218	24 * 1 pin	Straight socket strip (24 pcs.)	
	P.....1	54.01.0020	0.63*0.63	Straight soldering male pin.	
	P.....2	54.01.0020	0.63*0.63	Straight soldering male pin.	
	R.....1	57.11.3331	330	1%, 0207 • MF	
	RZ....1	57.88.3331	8 * 330	2%, DIL16	
	RZ....2	57.88.3331	8 * 330	2%, DIL16	
	RZ....3	57.88.3331	8 * 330	2%, DIL16	
	RZ....4	57.88.4103	8 * 10 k	2%, SIP 9	

IND.	POS.NO.	PART NO.	VALUE	SPECIFICATIONS / EQUIVALENT	MANUF.
	S.....1	55.13.0113	2 * U	Push-Push Button Schwitch.	MEC.
	S.....2	55.13.0113	2 * U	Push-Push Button Schwitch.	MEC.
	S.....3	55.13.0112	2 * U	Momentary Push Button Switch.	MEC.
	S.....4	55.13.0112	2 * U	Momentary Push Button Switch.	MEC.
	S.....5	55.13.0112	2 * U	Momentary Push Button Switch.	MEC.
	S.....6	55.13.0112	2 * U	Momentary Push Button Switch.	MEC.
	TP....1	54.02.0320	2.8 * 0.8	Straight soldering strip.	

Note : DL 1 and DL 2 are mounted on LED sockets 553.03.0230 (2 pcs.)
Devices DLZ 1-to-4 are mounted on 2 * 5 pcs. 553.03.0218 pins.

SAL=Solid Aluminium, PETP=Polyester, MF=Metal Film.

MANUFACTURERS :

HP = Hewlet Packard
MEC = Mekanisk Elektrisk Compagni af 1975
Sie = Siemens

DRIG 88/02/11

VARISPEED CONTROLLER 1.328.280.00
-VARISPEED MAIN BOARD 1.328.282.20

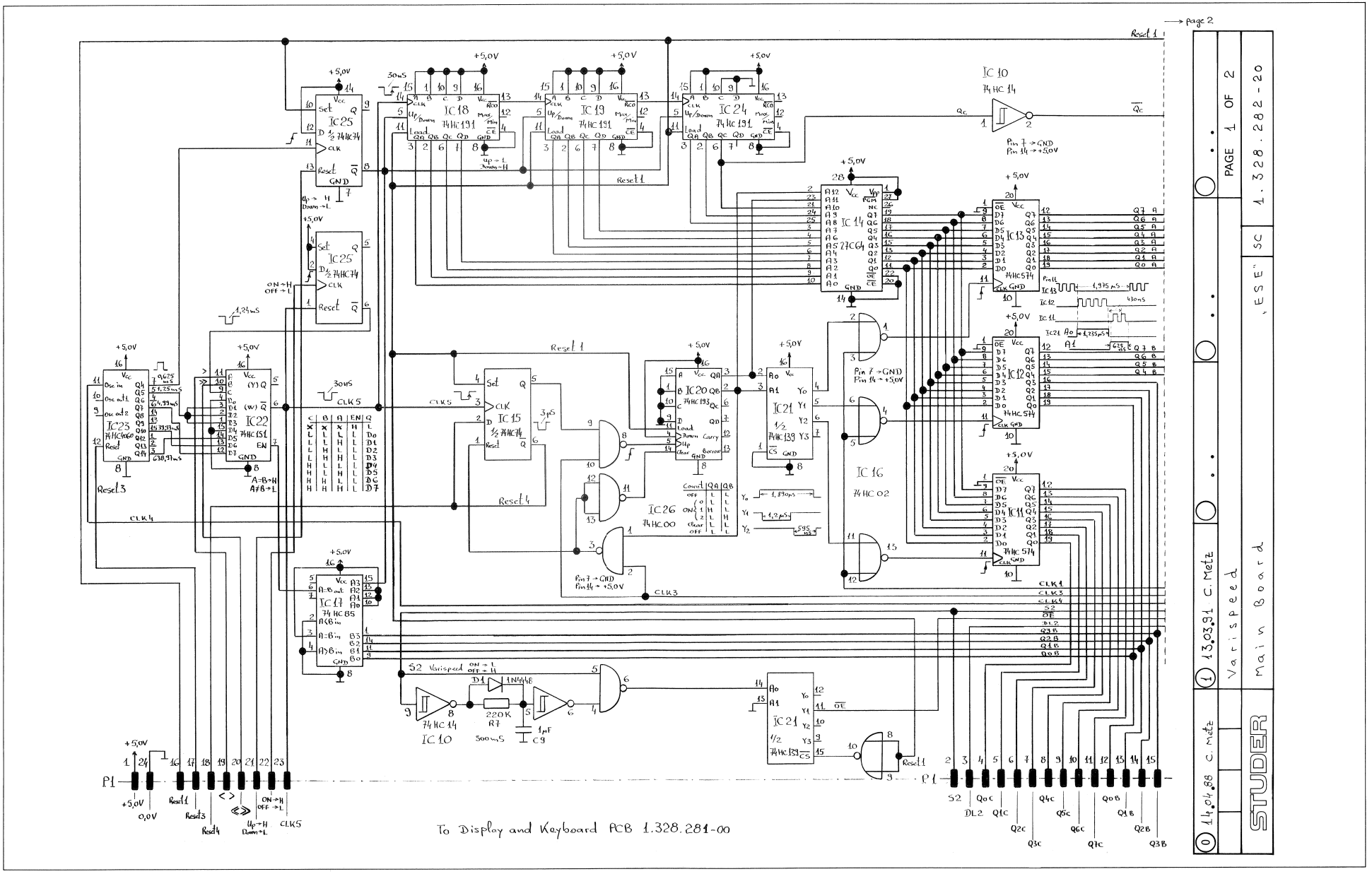

VARISPEED CONTROLLER 1.328.280.00
-VARISPEED MAIN BOARD 1.328.282.20

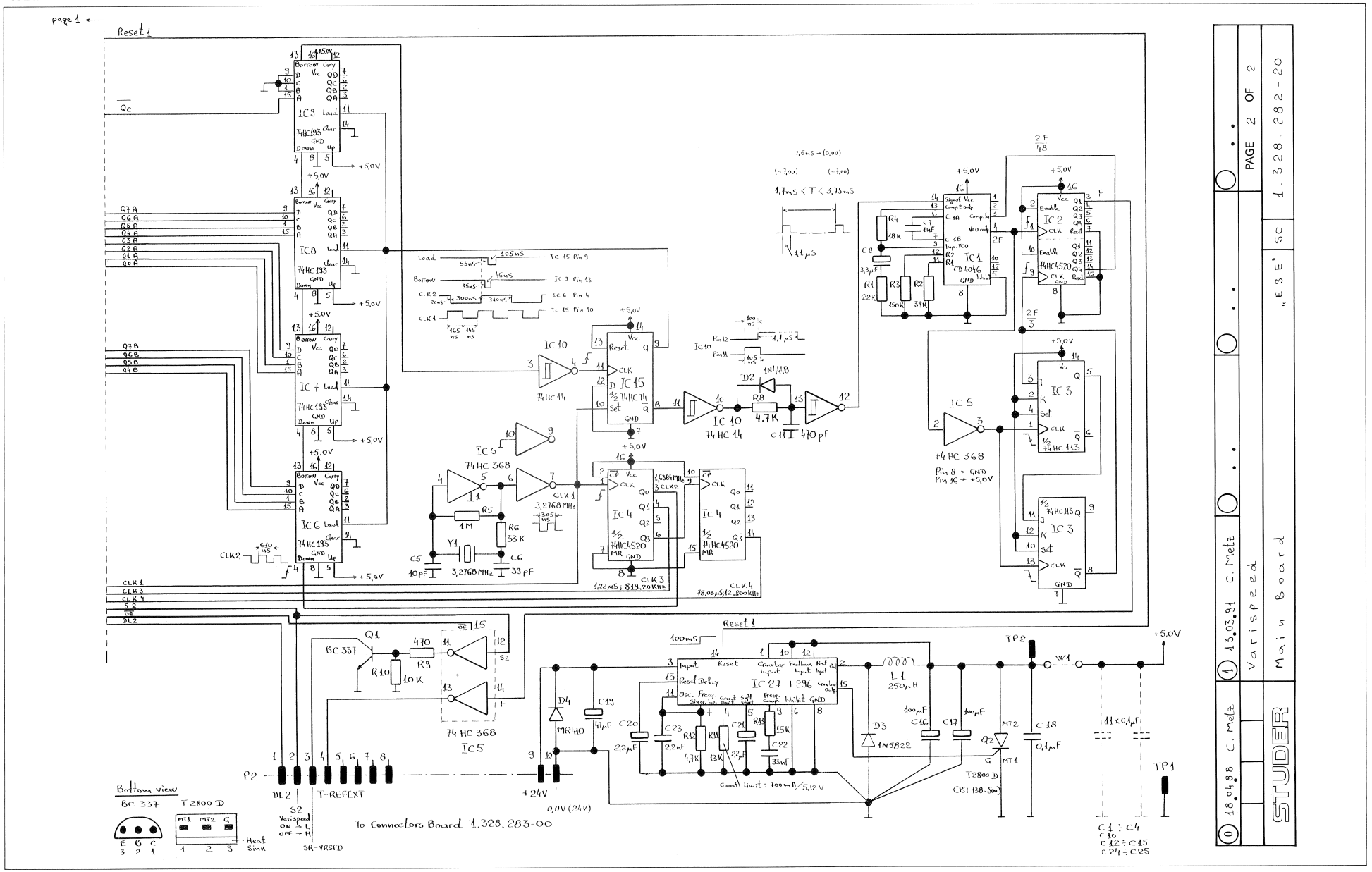

0	18.04.88	C. Metz			
1	13.03.91	C. Metz	Varispeed	Main Board	"ESE" SC 1.328.282-20

PAGE 2 OF 2

VARISPEED CONTROLLER 1.328.280.00
-VARISPEED MAIN BOARD 1.328.282.20

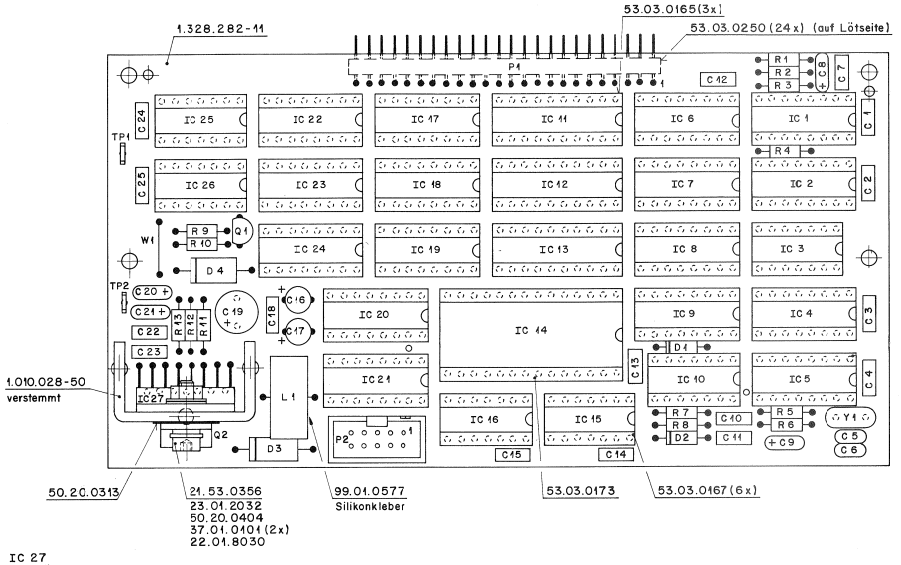

IC 27
mit Wärmeleitpaste
montiert.

Ausgabe	Datum	Gez.	Gepr.	Gen.	Index
Änderung					③ ②
	23.1.89				①
	7.9.88				⓪

Kopie für:

STUDER REGENSDORF ZÜRICH | Benennung: MAIN BOARD ESE | Nummer: 1.328.282-20

Ad	..POS..	...REF.No...	DESCRIPTION	MANUFACTURER
	C.....1	59.06.0104	.1 u 10%, 63V , PETP	
	C.....2	59.06.0104	.1 u 10%, 63V , PETP	
	C.....3	59.06.0104	.1 u 10%, 63V , PETP	
	C.....4	59.06.0104	.1 u 10%, 63V , PETP	
	C.....5	59.34.1100	10 p 5%, NP 0 , CER	
	C.....6	59.34.2390	39 p 5%, N150 , CER	
	C.....7	59.06.0102	1000 p 10%, 63V , PETP	
	C.....8	59.26.2339	3.3 u 20%, 16V , SAL	
	C.....9	59.26.5109	1 u 20%, 25V , SAL	
	C....10	59.06.0104	.1 u 10%, 63V , PETP	
03	C....11	59.34.5471	470 p 5%,N1500 , CER	
	C....12	59.06.0104	.1 u 10%, 63V , PETP	
	C....13	59.06.0104	.1 u 10%, 63V , PETP	
	C....14	59.06.0104	.1 u 10%, 63V , PETP	
	C....15	59.06.0104	.1 u 10%, 63V , PETP	
01	C....16	59.22.3101	100 u -20%, 10V , EL	
01	C....17	59.22.3101	100 u -20%, 10V , EL	
	C....18	59.06.0104	.1 u 10%, 63V , PETP	
	C....19	59.22.6470	47 u -20%, 40V , EL	
	C....20	59.26.2229	2.2 u 20%, 16V , SAL	
	C....21	59.26.2229	2.2 u 20%, 16V , SAL	
	C....22	59.06.0333	.033 u 10%, 63V , PETP	
	C....23	59.06.0222	2200 p 10%, 63V , PETP	
	C....24	59.06.0104	.1 u 10%, 63V , PETP	
	C....25	59.06.0104	.1 u 10%, 63V , PETP	
	D.....1	50.04.0125	1N 4448 75 V, 0.1 A, 4 ns, Si.	
	D.....2	50.04.0125	1N 4448 75 V, 0.1 A, 4 ns, Si.	
	D.....3	50.04.0519	1 N 5822 40 V, 3 A, Schottky.	Mot.
	D.....4	50.04.0521	MUR 410 100 V, 5 A, Si.	Mot.
	IC....1	50.07.0046	MC 14046 B Phase-Locked Loop.	Mot.
	IC....2	50.17.4520	74 HC 4520 Dual 4-Bit Binary Counter.	
	IC....3	50.17.1113	74 HC 113 Dual J-K Flip-Flop with Set.	
	IC....4	50.17.4520	74 HC 4520 Dual 4-Bit Binary Counter.	
	IC....5	50.17.1368	74 HC 368 Hex 3-State Inv. Buff., 2-Bit & 4-Bit Sect.	
	IC....6	50.17.1193	74 HC 193 Preset. 4-Bit Bin. Up/Down Count. with Reset	
	IC....7	50.17.1193	74 HC 193 Preset. 4-Bit Bin. Up/Down Count. with Reset	
	IC....8	50.17.1193	74 HC 193 Preset. 4-Bit Bin. Up/Down Count. with Reset	
	IC....9	50.17.1193	74 HC 193 Preset. 4-Bit Bin. Up/Down Count. with Reset	
	IC...10	50.17.1014	74 HC 14 Hex Schmitt-Trigger Inverter.	
	IC...11	50.17.1574	74 HC 574 Octal 3-State Noninverting D-Type Flip-Flop.	
	IC...12	50.17.1574	74 HC 574 Octal 3-State Noninverting D-Type Flip-Flop.	
	IC...13	50.17.1574	74 HC 574 Octal 3-State Noninverting D-Type Flip-Flop.	
	IC...14	1.328.981.20	SW 51/87 VARISPEED CONTROLLER	St.
	IC...15	50.17.1074	74 HC 74 Dual D-Type Flip-Flop with Set & Reset.	
	IC...16	50.17.1002	74 HC 02 Quad 2-Input NOR Gate.	
	IC...17	50.17.1085	74 HC 85 4-Bit Magnitude Comparator.	
	IC...18	50.17.1191	74 HC 191 Presettable 4-Bit Binary Up/Down Counter.	
	IC...19	50.17.1191	74 HC 191 Presettable 4-Bit Binary Up/Down Counter.	
	IC...20	50.17.1193	74 HC 193 Preset. 4-Bit Bin. Up/Down Count. with Reset	
	IC...21	50.17.1139	74 HC 139 Dual 1-of-4 Decoder/Demultiplexer.	
	IC...22	50.17.1151	74 HC 151 8 Input Data Selector/Multiplexer.	
	IC...23	50.17.4060	74 HC 4060 14 Stage Binary Ripple Counter with Osc.	
	IC...24	50.17.1191	74 HC 191 Presettable 4-Bit Binary Up/Down Counter.	
	IC...25	50.17.1074	74 HC 74 Dual D-Type Flip-Flop with Set & Reset.	
	IC...26	50.17.1000	74 HC 00 Quad 2-Input NAND Gate.	
	IC...27	50.10.0110	L 296 High Current Switching Voltage Regulator	SGS
	L.....1	62.03.0005	250 uH 1 A, Toroidal Choke.	St.
	P.....1	53.03.0250	24 * 1 pin Right Angle Male Contact Strip. (24 pcs.)	
	P.....2	54.14.2001	2 * 5 pins Straight Print Male Connector.	
	Q.....1	50.03.0340	BC 337-25 45 V, 0.8 A, Si. NPN.	
	Q.....2	50.99.0106	T 2800 D 400 V, 8 A, Triac.	RCA.
	R.....1	57.11.3223	22 k 1%, 0207 , MF	
	R.....2	57.11.3393	39 k 1%, 0207 , MF	
	R.....3	57.11.3154	150 k 1%, 0207 , MF	
	R.....4	57.11.3183	18 k 1%, 0207 , MF	
	R.....5	57.11.3105	1 M 1%, 0207 , MF	
	R.....6	57.11.3333	33 k 1%, 0207 , MF	
	R.....7	57.11.3224	220 k 1%, 0207 , MF	
03	R.....8	57.11.3472	4.7 k 1%, 0207 , MF	
	R.....9	57.11.3471	470 1% 0207 , MF	
	R....10	57.11.3103	10 k 1%, 0207 , MF	
02	R....11	57.11.3163	13 k 1%, 0207 , MF	
	R....12	57.11.3472	4.7 k 1%, 0207 , MF	
	R....13	57.11.3153	15 k 1%, 0207 , MF	
	TP....1	54.02.0320	2.8 * 0.8 Straight Faston Connector.	
	TP....2	54.02.0320	2.8 * 0.8 Straight Faston Connector.	
	W.....1	1.010.324.64	Wire-Bridge U, 4.3 * 10.2, 0.6	
	Y.....1	89.01.0376	3.2768 MHz HC 18 U Ceramic Resonator.	

Index (01): Capacitors 100 uF, 16V, replaced by 100 uF, 10V.
(07.04.89)
Index (02): Resistor 13 k replaced by resistor 16 k.
(20.04.89)
Index (03): Capacitor 1000 pF replaced by capacitor 470 pF.
(13.03.91) Resistor 2.2 k replaced by resistor 4.7 k.

CER=Ceramic, EL=Electrolytic, PETF=Polyester,SAL=Solid Aluminium,
MF=Metal Film.

MANUFACTURERS :

Mot = Motorola
RCA = RCA Corporation
SGS = SGS Microelettronica Sp A
St = Studer

1.328.282-20 MAIN BOARD CM91/03/1303

END

VARISPEED CONTROLLER 1.328.280.00
-VARISPEED CONNECTORS BOARD 1.328.283.00

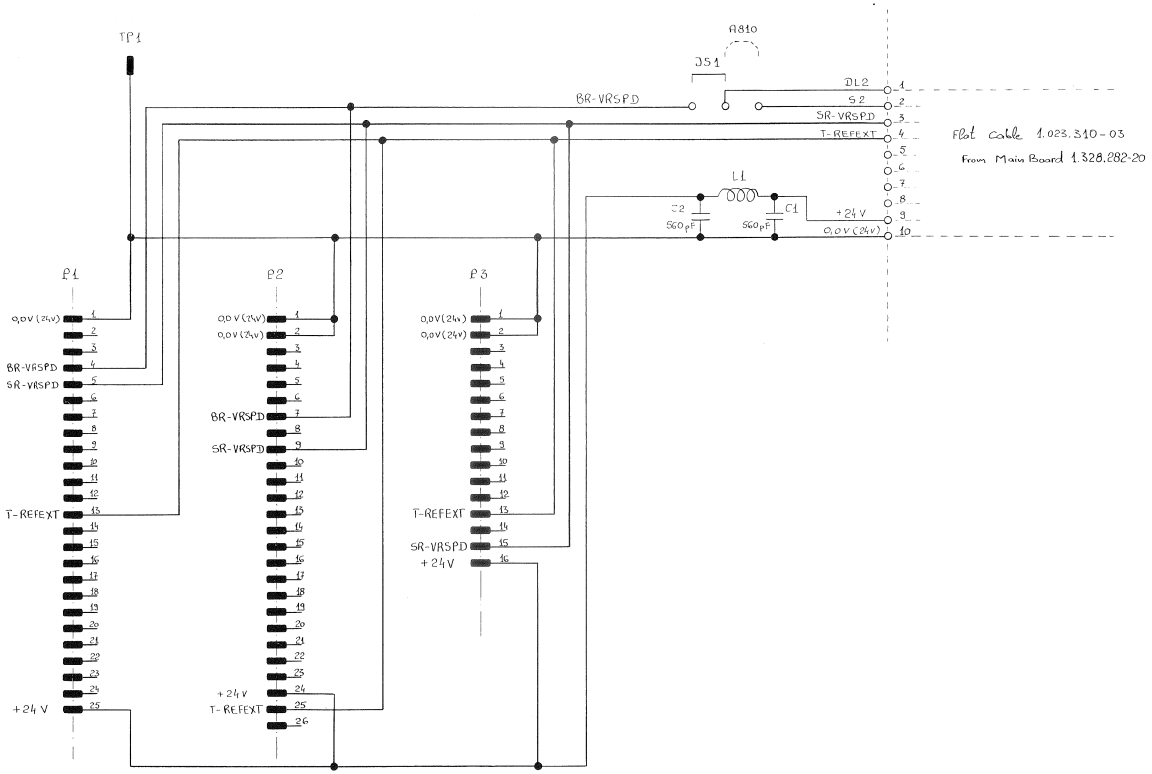

0 26.04.88 C Metz					
	Varispeed			PAGE 1 OF 1	
STUDER	Connectors Board		SC	1.328.283-00	

AUDIO REMOTE CONTROL 2CH 1.328.512.00
AUDIO REMOTE CONTROL 4CH 1.328.515.00

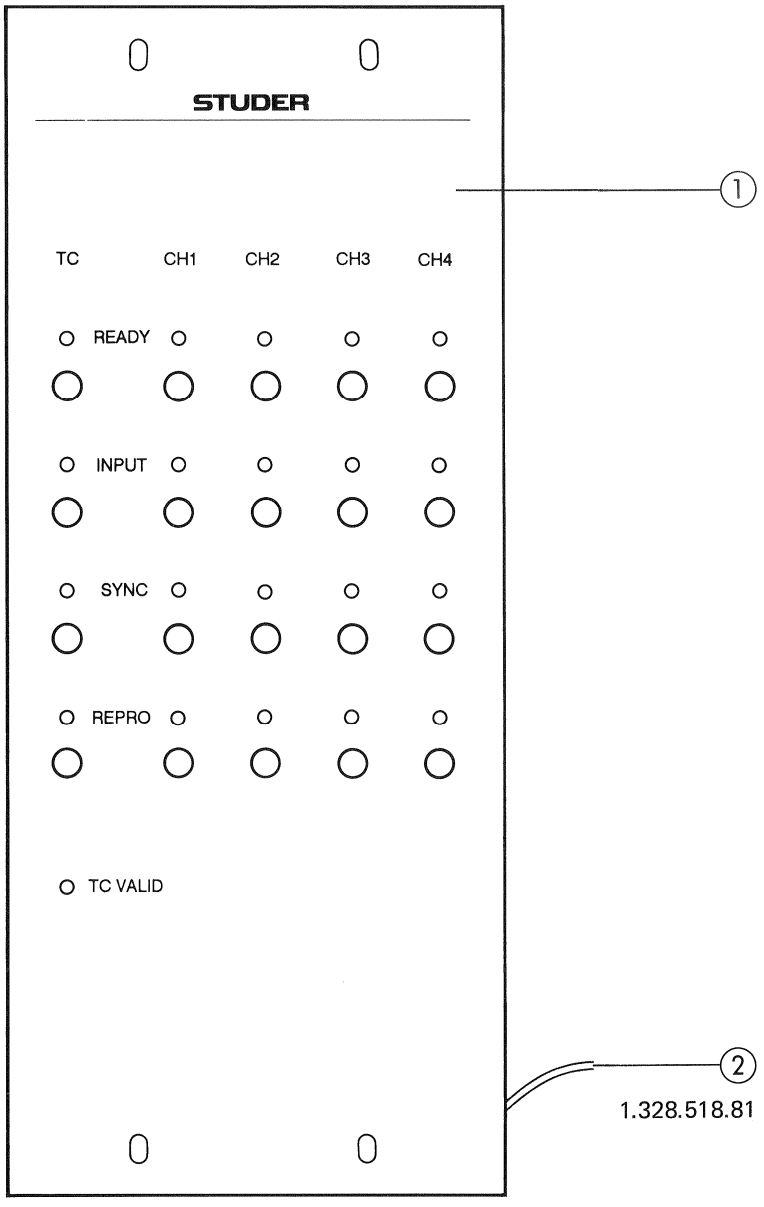

AUDIO REMOTE CONTROL 2CH 1.328.512.00
AUDIO REMOTE CONTROL 4CH 1.328.515.00

Index	Qty.	Order No.	Part Name	Specification
1	1	1.328.512.01	Front cover 2CH	
or	1	1.328.515.01	Front cover 4CH	
2	1	1.328.518.81	Connecting cable 15m compl.	

AUDIO REMOTE CONTROL 2CH/4CH 1.328.512/515
-AUDIO REMOTE SWITCH BOARD (2CH) 1.328.498.00 (RED LED) / 1.328.499.00 (4CH)
-AUDIO REMOTE SWITCH BOARD (2CH) 1.328.514.00 (YELLOW LED) / 1.328.517.00 (4CH)

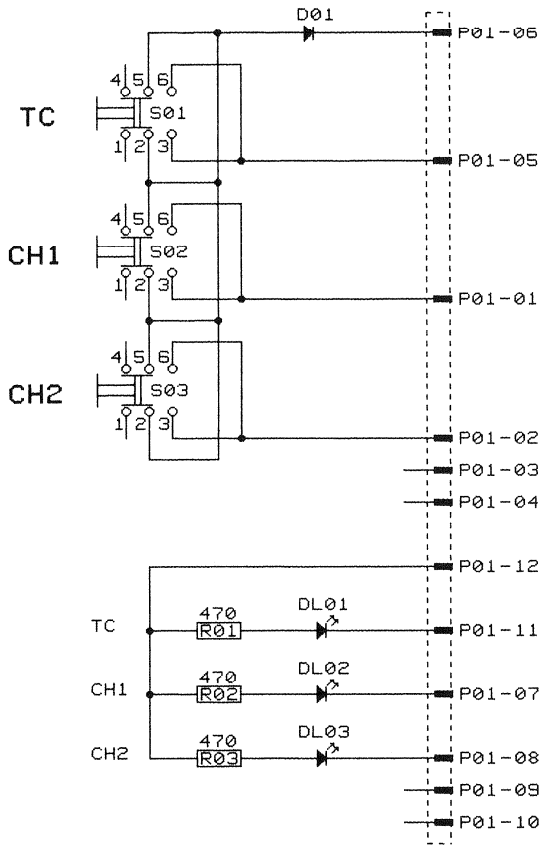

21.12.90 DS			
	A807 - CHANNEL REMOTE CONTROL		PAGE 1 OF 1
	AUDIO REM.SWITCH BOARD 2CH RD	SCH	1.328.498-00
STUDER	AUDIO REMOTE SWITCH BOARD 2CH	SCH	1.328.514-00

AUDIO REMOTE CONTROL 2CH/4CH 1.328.512/515
-AUDIO REMOTE SWITCH BOARD (2CH) 1.328.498.00 (RED LED) / 1.328.499.00 (4CH)
-AUDIO REMOTE SWITCH BOARD (2CH) 1.328.514.00 (YELLOW LED) / 1.328.517.00 (4CH)

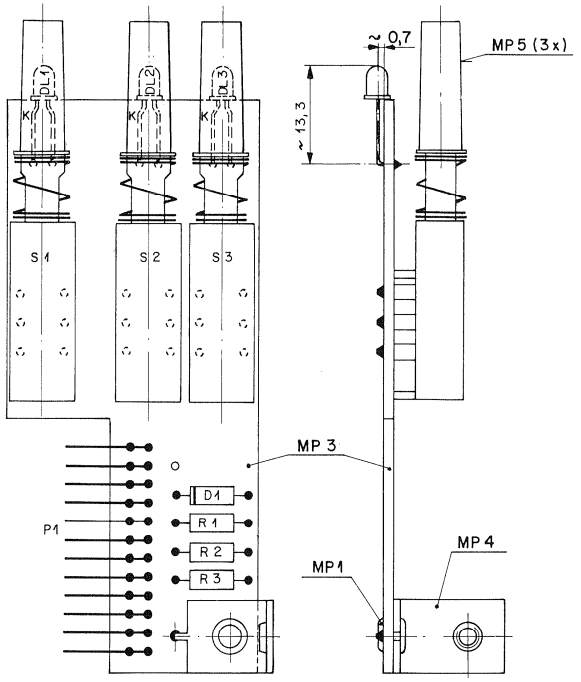

IND.	POS.NO.	PART NO.	VALUE	SPECIFICATIONS / EQUIVALENT	MANUF.
	D.....1	50.04.0125	1N4448	50V Si	
★ For 1.328.514/517	DL....1	50.04.2130	LY 3360	LED yel D=3 mm	Sie
	DL....2	50.04.2130	LY 3360	LED yel D=3 mm	Sie
	DL....3	50.04.2130	LY 3360	LED yel D=3 mm	Sie
	MP....1	28.21.1450	1 pce	Tubular Rivet D3.3 * 4.0	
	MP....2	1.328.514.01	0 pce	No. Label	ST
	MP....3	1.328.514.11	1 pce	AUDIO REMOTE SWITCH PCB 2CH	ST
	MP....4	1.726.780.01	1 pce	PCB-Holder	ST
	MP....5	1.810.320.02	3 pce	Pushbutton d.gry	ST
	P.....1	54.01.0221	12-pole	CIS\Pin Strip horizontal	AMP
	R.....1	57.11.3471	470 Ohm	1%, 0.25W, MF	
	R.....2	57.11.3471	470 Ohm	1%, 0.25W, MF	
	R.....3	57.11.3471	470 Ohm	1%, 0.25W, MF	
	S.....1	55.15.0020	Schadow	Pushbutton Switch	ITT
	S.....2	55.15.0020	Schadow	Pushbutton Switch	ITT
	S.....3	55.15.0020	Schadow	Pushbutton Switch	ITT

★ For 1.328.498/499

DL 1 50.04.2129 LS 3360 LED red

DL 2 50.04.2129 LS 3360 LED red

DL 3 50.04.2129 LS 3360 LED red

MF= Metal Film / Si= Silicon

MANUFACTURER: Sie= Siemens / ST= STUDER

ORIG 89/10/09

S T U D E R (00) 89/10/09 DS AUDIO REMOTE SWITCH BOARD 2CH PL 1.328.514.00 PAGE 1

AUDIO REMOTE CONTROL 2CH/4CH 1.328.512/515
-AUDIO REMOTE CTRL. BOARD 2CH+TC 1.328.513.00
-AUDIO REMOTE CTRL. BOARD 4CH+TC 1.328.516.00

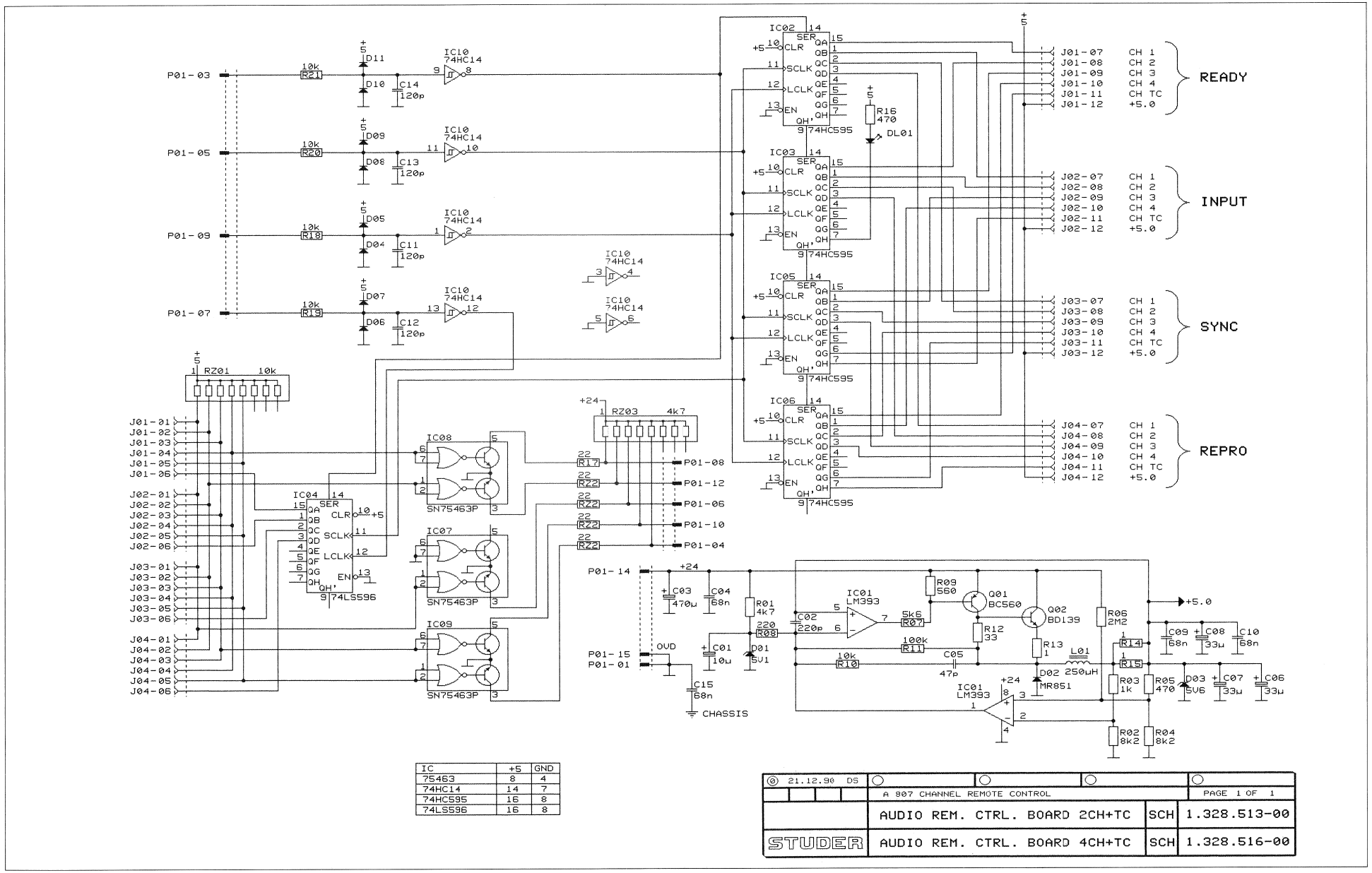

IC	+5	GND
75463	8	4
74HC14	14	7
74HC595	16	8
74LS596	16	8

AUDIO REMOTE CONTROL 2CH 1.328.512.00
-AUDIO REMOTE CTRL. BOARD 2CH+TC 1.328.513.00

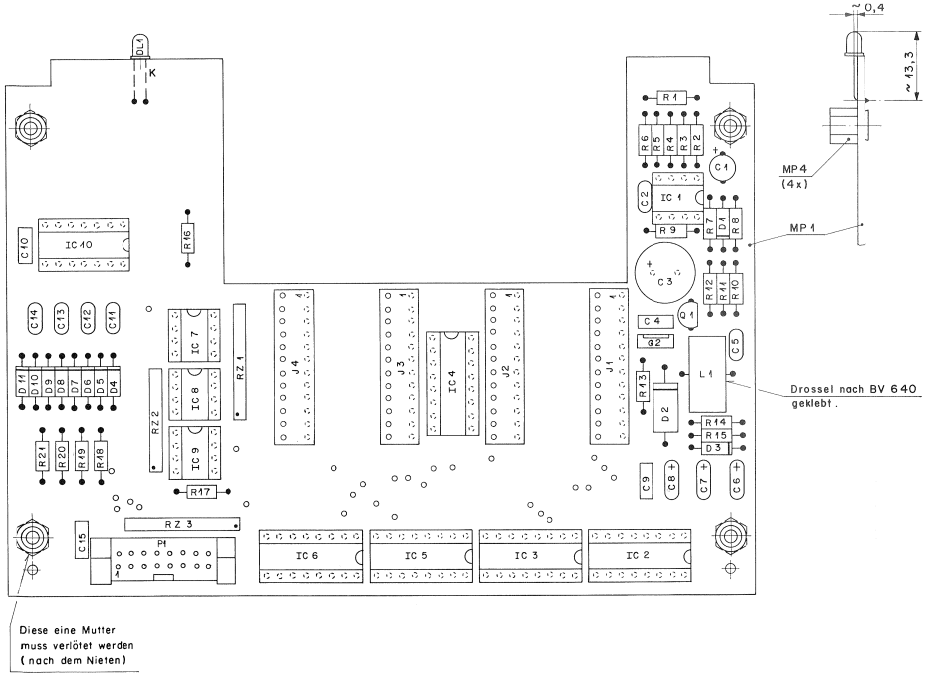

IND.	POS.NO.	PART NO.	VALUE	SPECIFICATIONS / EQUIVALENT	MANUF.
	C.....1	59.22.6100	10 uF	-20% 35V EL	
	C.....2	59.34.4221	220 pF	5% 63V CER	
	C.....3	59.22.6471	470 uF	-20% 40V EL	
	C.....4	59.06.0683	68 nF	10% 63V PETP	
	C.....5	59.34.2470	47 pF	5% 63V CER	
	C.....6	59.26.1330	33 uF	20% 10V ALU	
	C.....7	59.26.1330	33 uF	20% 10V ALU	
	C.....8	59.26.1330	33 uF	20% 10V ALU	
	C.....9	59.06.0683	68 nF	10% 63V PETP	
	C....10	59.06.0683	68 nF	10% 63V PETP	
	C....11	59.34.4221	220 pF	5% 63V CER	
	C....12	59.34.4221	220 pF	5% 63V CER	
	C....13	59.34.4221	220 pF	5% 63V CER	
	C....14	59.34.4221	220 pF	5% 63V CER	
	C....15	59.06.0683	68 nF	10% 63V PETP	
	D.....1	50.04.1112	5.1 V	5% 0.4W Zener	
	D.....2	50.04.0509	MR 851	MR 852, RG 3 B	Mot,GI
	D.....3	50.04.1108	5.6 V	5% 0.4W Zener	
	D.....4	50.04.0125	1N4448	50V Si	
	D.....5	50.04.0125	1N4448	50V Si	
	D.....6	50.04.0125	1N4448	50V Si	
	D.....7	50.04.0125	1N4448	50V Si	
	D.....8	50.04.0125	1N4448	50V Si	
	D.....9	50.04.0125	1N4448	50V Si	
	D....10	50.04.0125	1N4448	50V Si	
	D....11	50.04.0125	1N4448	50V Si	
	DL....1	50.04.2131	LG3360	LED grn D=3mm	Sie
	IC....1	50.05.0283	LM 393	Dual Voltage Comparator	
	IC....2	50.17.1595	74HC595	8-bit Shift Register tri	
	IC....3	50.17.1595	74HC595	8-bit Shift Register tri	
	IC....4	50.06.0696	74LS596	8-bit Shift Register o.c.	
	IC....5	50.17.1595	74HC595	8-bit Shift Register tri	
	IC....6	50.17.1595	74HC595	8-bit Shift Register tri	
	IC....7	50.05.0203	SN75463	Dual OR-Driver o.c.	NS/TI

IND.	POS.NO.	PART NO.	VALUE	SPECIFICATIONS / EQUIVALENT	MANUF.
	IC....8	50.05.0203	SN75463	Dual OR-Driver o.c.	NS/TI
	IC....9	50.05.0203	SN75463	Dual OR-Driver o.c.	NS/TI
	IC....10	50.17.1014	74HC14	Hex Schmitt-Trigger Inverter	
	J.....1	54.01.0215	12-pole	CIS-Socket	AMP
	J.....2	54.01.0215	12-pole	CIS-Socket	AMP
	J.....3	54.01.0215	12-pole	CIS-Socket	AMP
	J.....4	54.01.0215	12-pole	CIS-Socket	AMP
	L.....1	62.03.0005	250 uH/1A	Toroidal Choke	To
	MP....1	1.328.516.11	1 pce	AUDIO REMOTE BASIS PCB	ST
	MP....2	1.328.513.01	0 pce	Nr. Label	ST
	MP....3	43.01.0108	1 pce	EGE Warning Label	
	MP....4	1.010.016.22	4 pce	Rivet-Nut M3x5mm	ST
	P.....1	54.14.2102	16-pole	PCB-Connector for Flat-Cable w/lock	
	Q.....1	50.03.0496	BC 560 B	PNP-Transistor 40V 100mA	
	Q.....2	50.03.0451	BD 139-10	NPN-Transistor 80V 1.5A	
	R.....1	57.11.3472	4.7 kOhm	1% 0.25W MF	
	R.....2	57.11.3822	8.2 kOhm	1% 0.25W MF	
	R.....3	57.11.3102	1 kOhm	1% 0.25W MF	
	R.....4	57.11.3822	8.2 kOhm	1% 0.25W MF	
	R.....5	57.11.3471	470 Ohm	1% 0.25W MF	
	R.....6	57.11.5225	2.2 MOhm	5% 0.25W MF	
	R.....7	57.11.3562	5.6 kOhm	1% 0.25W MF	
	R.....8	57.11.3221	220 Ohm	1% 0.25W MF	
	R.....9	57.11.3561	560 Ohm	1% 0.25W MF	
	R....10	57.11.3103	10 kOhm	1% 0.25W MF	
	R....11	57.11.3104	100 kOhm	1% 0.25W MF	
	R....12	57.11.3330	33 Ohm	1% 0.25W MF	
	R....13	57.11.3109	1 Ohm	1% 0.25W MF	
	R....14	57.11.3109	1 Ohm	1% 0.25W MF	
	R....15	57.11.3109	1 Ohm	1% 0.25W MF	
	R....16	57.11.3471	470 Ohm	1% 0.25W MF	

IND.	POS.NO.	PART NO.	VALUE	SPECIFICATIONS / EQUIVALENT	MANUF.
	R....17	57.11.3220	22 Ohm	1% 0.25W MF	
	R....18	57.11.3103	10 kOhm	1% 0.25W MF	
	R....19	57.11.3103	10 kOhm	1% 0.25W MF	
	R....20	57.11.3103	10 kOhm	1% 0.25W MF	
	R....21	57.11.3103	10 kOhm	1% 0.25W MF	
	RZ....1	57.88.4103	10 kOhm	R-Network 8 x 0.125W 2%	
	RZ....2	57.88.2220	22 Ohm	R-Network 4 x 0.125W 2%	
	RZ....3	57.88.4472	4.7 kOhm	R-Network 8 x 0.125W 2%	
	XIC...1	53.03.0166	8-pole	IC-Socket	
	XIC...2	53.03.0168	16-pole	IC-Socket	
	XIC...3	53.03.0168	16-pole	IC-Socket	
	XIC...4	53.03.0168	16-pole	IC-Socket	
	XIC...5	53.03.0168	16-pole	IC-Socket	
	XIC...6	53.03.0168	16-pole	IC-Socket	
	XIC...7	53.03.0166	8-pole	IC-Socket	
	XIC...8	53.03.0166	8-pole	IC-Socket	
	XIC...9	53.03.0166	8-pole	IC-Socket	
	XIC..10	53.03.0167	14-pole	IC-Socket	

MF= Metal Film Si= Silicon EL= Electrolytic
CER= Ceramic PETP= Polyester

MANUFACTURER: GI= General Instruments Mot= Motorola
NS= National Semiconductor Ph= Philips
Sie= Siemens ST= STUDER
TI= Texas Instruments To= Tokin

ORIG 90/05/17

AUDIO REMOTE CONTROL 4CH 1.328.515.00
-AUDIO REMOTE CTRL. BOARD 4CH+TC 1.328.516.00

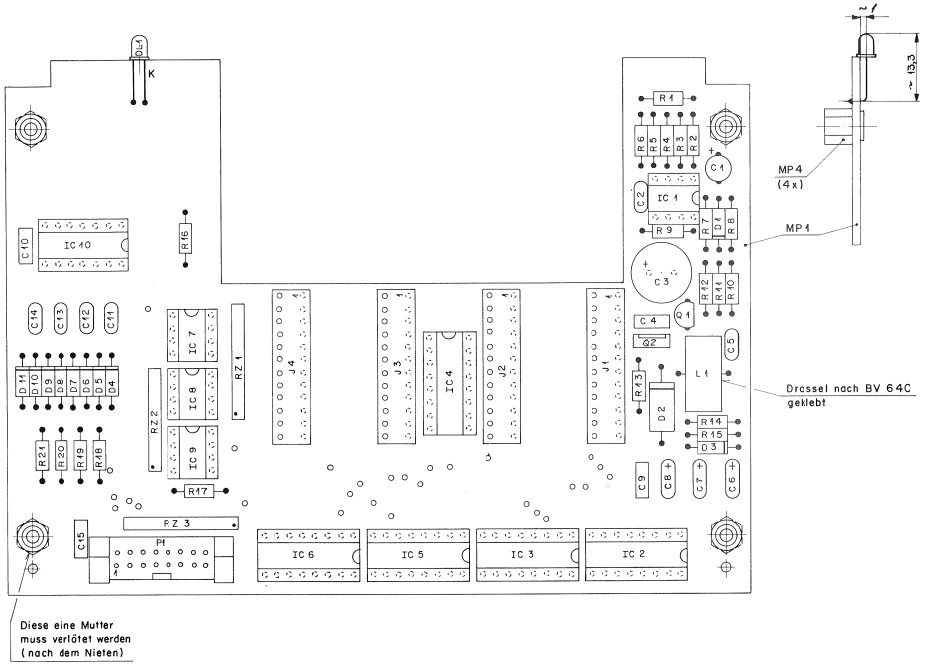

IND.	POS.NO.	PART NO.	VALUE	SPECIFICATIONS / EQUIVALENT	MANUF.
	C....1	59.22.6100	10 uF	-20% 35V EL	
	C....2	59.34.4221	220 pF	5% 63V CER	
	C....3	59.22.6471	470 uF	-20% 40V EL	
	C....4	59.06.0683	68 nF	10% 63V PETP	
	C....5	59.34.2470	47 pF	5% 63V CER	
	C....6	59.26.1330	33 uF	20% 10V ALU	
	C....7	59.26.1330	33 uF	20% 10V ALU	
	C....8	59.26.1330	33 uF	20% 10V ALU	
	C....9	59.06.0683	68 nF	10% 63V PETP	
	C....10	59.06.0683	68 nF	10% 63V PETP	
	C....11	59.34.4221	220 pF	5% 63V CER	
	C....12	59.34.4221	220 pF	5% 63V CER	
	C....13	59.34.4221	220 pF	5% 63V CER	
	C....14	59.34.4221	220 pF	5% 63V CER	
	C....15	59.06.0683	68 nF	10% 63V PETP	
	D....1	50.04.1112	5.1 V	5% 0.4W Zener	
	D....2	50.04.0509	MR 851	MR 852. RG 3 B	Mot,GI
	D....3	50.04.1108	5.6 V	5% 0.4W Zener	
	D....4	50.04.0125	1N4448	50V Si	
	D....5	50.04.0125	1N4448	50V Si	
	D....6	50.04.0125	1N4448	50V Si	
	D....7	50.04.0125	1N4448	50V Si	
	D....8	50.04.0125	1N4448	50V Si	
	D....9	50.04.0125	1N4448	50V Si	
	D....10	50.04.0125	1N4448	50V Si	
	D....11	50.04.0125	1N4448	50V Si	
	DL....1	50.04.2131	LG3360	LED grn D=3mm	Sie
	IC....1	50.05.0283	LM 393	Dual Voltage Comparator	
	IC....2	50.17.1595	74HC595	8-bit Shift Register tri	
	IC....3	50.17.1595	74HC595	8-bit Shift Register tri	
	IC....4	50.06.0596	74LS596	8-bit Shift Register o.c.	
	IC....5	50.17.1595	74HC595	8-bit Shift Register tri	
	IC....6	50.17.1595	74HC595	8-bit Shift Register tri	
	IC....7	50.05.0203	SN75463	Dual OR-Driver o.c.	NS,TI

IND.	POS.NO.	PART NO.	VALUE	SPECIFICATIONS / EQUIVALENT	MANUF.
	IC....8	50.05.0203	SN75463	Dual OR-Driver o.c.	NS,TI
	IC....9	50.05.0203	SN75463	Dual OR-Driver o.c.	NS,TI
	IC....10	50.17.1014	74HC14	Hex Schmitt-Trigger Inverter	
	J....1	54.01.0215	12-pole	CIS-Socket	AMP
	J....2	54.01.0215	12-pole	CIS-Socket	AMP
	J....3	54.01.0215	12-pole	CIS-Socket	AMP
	J....4	54.01.0215	12-pole	CIS-Socket	AMP
	L....1	62.03.0005	250 uH/1A	Toroidal Choke	To
	MP....1	1.328.516.11	1 pce	AUDIO REMOTE BASIS PCB	ST
	MP....2	1.328.516.01	0 pce	Nr. Label	ST
	MP....3	43.01.0108	1 pce	ESE Warning Label	
	MP....4	1.010.016.22	4 pcs	Rivet-Mut M3x5mm	ST
	P....1	54.14.2102	16-pole	PCB-Connector for Flat-Cable w/lock	
	Q....1	50.03.0496	BC 560 B	PNP-Transistor 40V 100mA	
	Q....2	50.03.0451	BD 139-10	NPN-Transistor 80V 1.5A	
	R....1	57.11.3472	4.7 kOhm	1% 0.25W MF	
	R....2	57.11.3822	8.2 kOhm	1% 0.25W MF	
	R....3	57.11.3102	1 kOhm	1% 0.25W MF	
	R....4	57.11.3822	8.2 kOhm	1% 0.25W MF	
	R....5	57.11.3471	470 Ohm	1% 0.25W MF	
	R....6	57.11.5225	2.2 MOhm	5% 0.25W MF	
	R....7	57.11.3562	5.6 kOhm	1% 0.25W MF	
	R....8	57.11.3221	220 Ohm	1% 0.25W MF	
	R....9	57.11.3561	560 Ohm	1% 0.25W MF	
	R....10	57.11.3103	10 kOhm	1% 0.25W MF	
	R....11	57.11.3104	100 kOhm	1% 0.25W MF	
	R....12	57.11.3330	33 Ohm	1% 0.25W MF	
	R....13	57.11.3109	1 Ohm	1% 0.25W MF	
	R....14	57.11.3109	1 Ohm	1% 0.25W MF	
	R....15	57.11.3109	1 Ohm	1% 0.25W MF	
	R....16	57.11.3471	470 Ohm	1% 0.25W MF	

IND.	POS.NO.	PART NO.	VALUE	SPECIFICATIONS / EQUIVALENT	MANUF.
	R....17	57.11.3220	22 Ohm	1% 0.25W MF	
	R....18	57.11.3103	10 kOhm	1% 0.25W MF	
	R....19	57.11.3103	10 kOhm	1% 0.25W MF	
	R....20	57.11.3103	10 kOhm	1% 0.25W MF	
	R....21	57.11.3103	10 kOhm	1% 0.25W MF	
	RZ....1	57.88.4103	10 kOhm	R-Network 8 * 0.125W 2%	
	RZ....2	57.88.2220	22 Ohm	R-Network 4 * 0.125W 2%	
	RZ....3	57.88.4472	4.7 kOhm	R-Network 8 * 0.125W 2%	
	XIC...1	53.03.0166	8-pole	IC-Socket	
	XIC...2	53.03.0168	16-pole	IC-Socket	
	XIC...3	53.03.0168	16-pole	IC-Socket	
	XIC...4	53.03.0168	16-pole	IC-Socket	
	XIC...5	53.03.0168	16-pole	IC-Socket	
	XIC...6	53.03.0168	16-pole	IC-Socket	
	XIC...7	53.03.0166	8-pole	IC-Socket	
	XIC...8	53.03.0166	8-pole	IC-Socket	
	XIC...9	53.03.0166	8-pole	IC-Socket	
	XIC...10	53.03.0167	14-pole	IC-Socket	

MF= Metal Film Si= Silicon EL= Electrolytic
CER= Ceramic PETP= Polyester

MANUFACTURER: GI= General Instruments Mot= Motorola
NS= National Semiconductor Ph= Philips
Sie= Siemens ST= STUDER
TI= Texas Instruments To= Tokin

ORIG 90/05/17

REMOTE TIMER DISPLAY BLOCKDIAGRAM 1.328.330.00

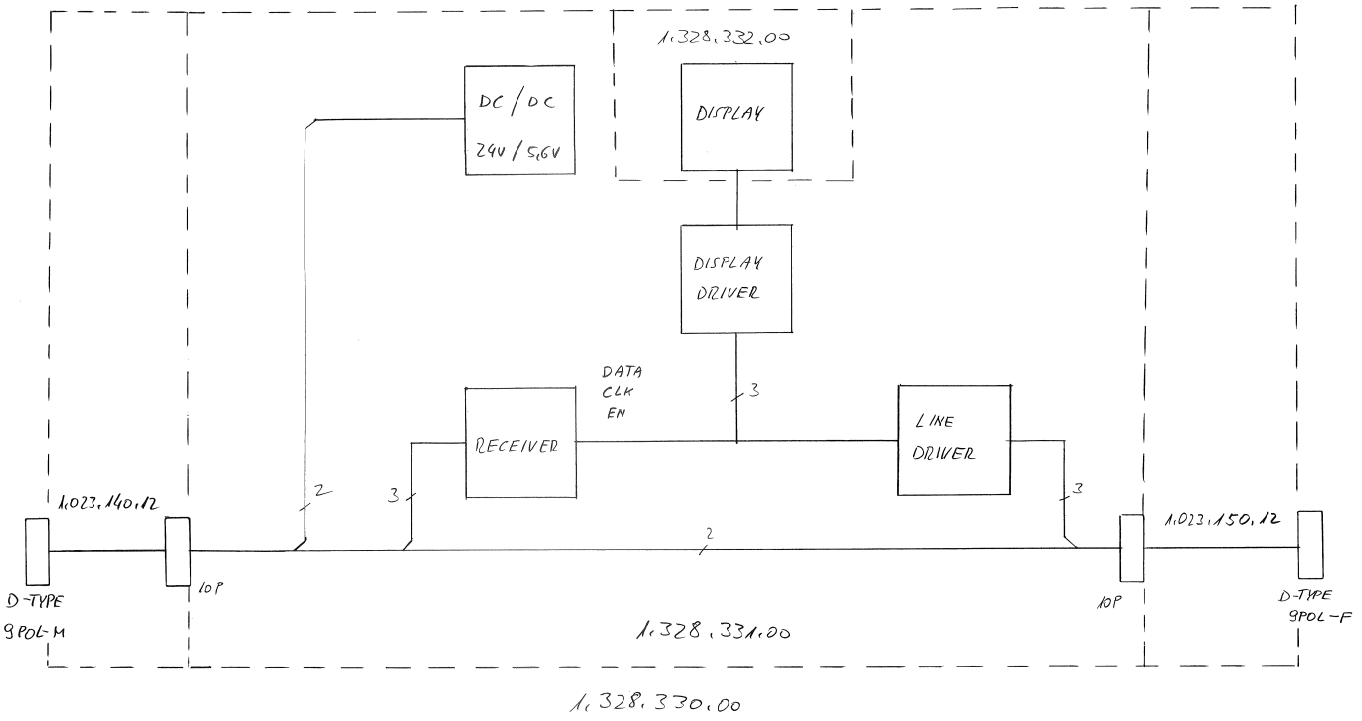

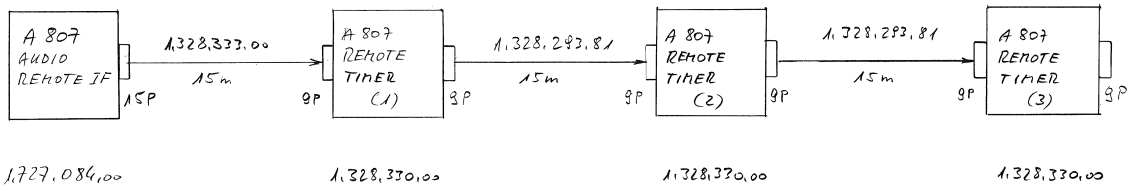

0 8.1.91 WH					
	A 807				PAGE 1 OF 1
STUDER	REMOTE TIMER DISPLAY				1.328.330.00

REMOTE TIMER DISPLAY 1.328.330.00

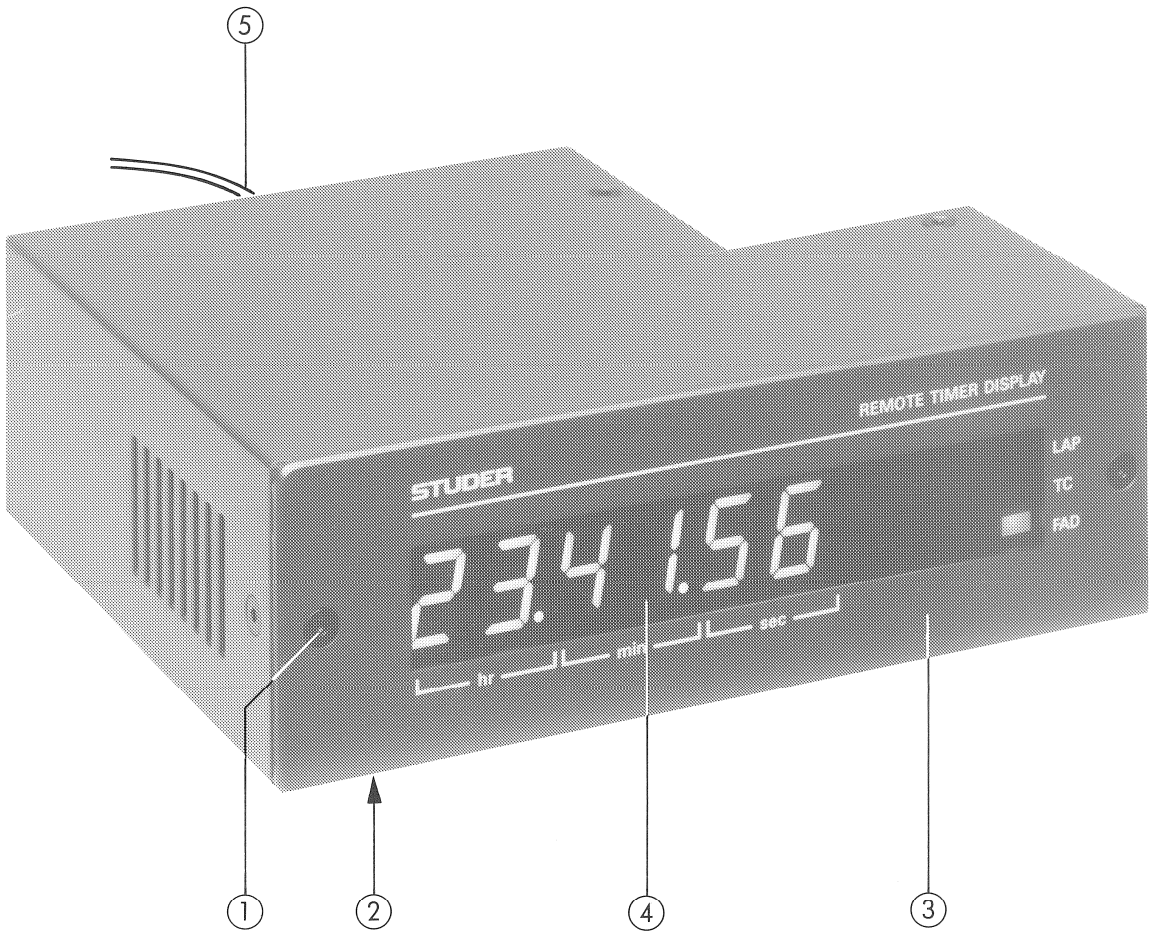

REMOTE TIMER DISPLAY 1.328.330.00

Index	Qty.	Order No.	Part Name	Specification
1	10	1.010.045.21	Screw black	M3x6
2	4	31.02.0211	Foot black	D16x6,5
3	1	1.328.330.03	Front cover	
4	1	1.328.285.04	Display window red	
5	1	1.328.333.81	Connection cable 15m for direct connection to machine	
or	1	1.328.293.81	Connection cable 15m for connection of additional counter	
	1	1.023.140.12	Cable 0,12m flat, 9pol D–Type male	
	1	1.023.150.12	Cable 0,12m flate, 9pol D–Type female	

ACCESSORIES

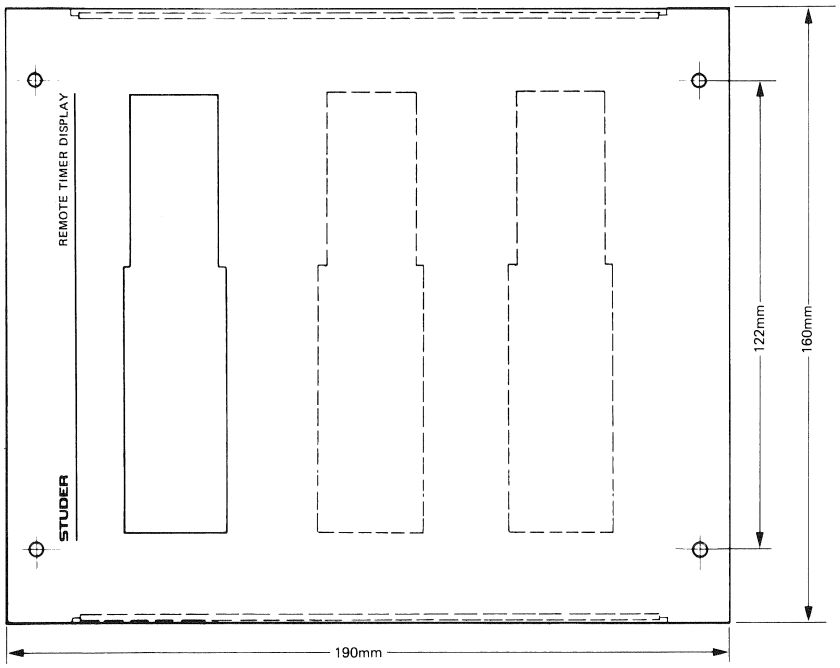

Index	Qty.	Order No.	Part Name	Specification
		1.328.330.31	Mounting frame for 1 display	
		1.328.330.32	Mounting frame for 2 displays	
		1.328.330.33	Mounting frame for 3 displays	
		1.010.043.21	Screw countersunk	M4x6

REMOTE TIMER DISPLAY 1.328.330.00
-DISPLAY DRIVER BOARD 1.328.331.00

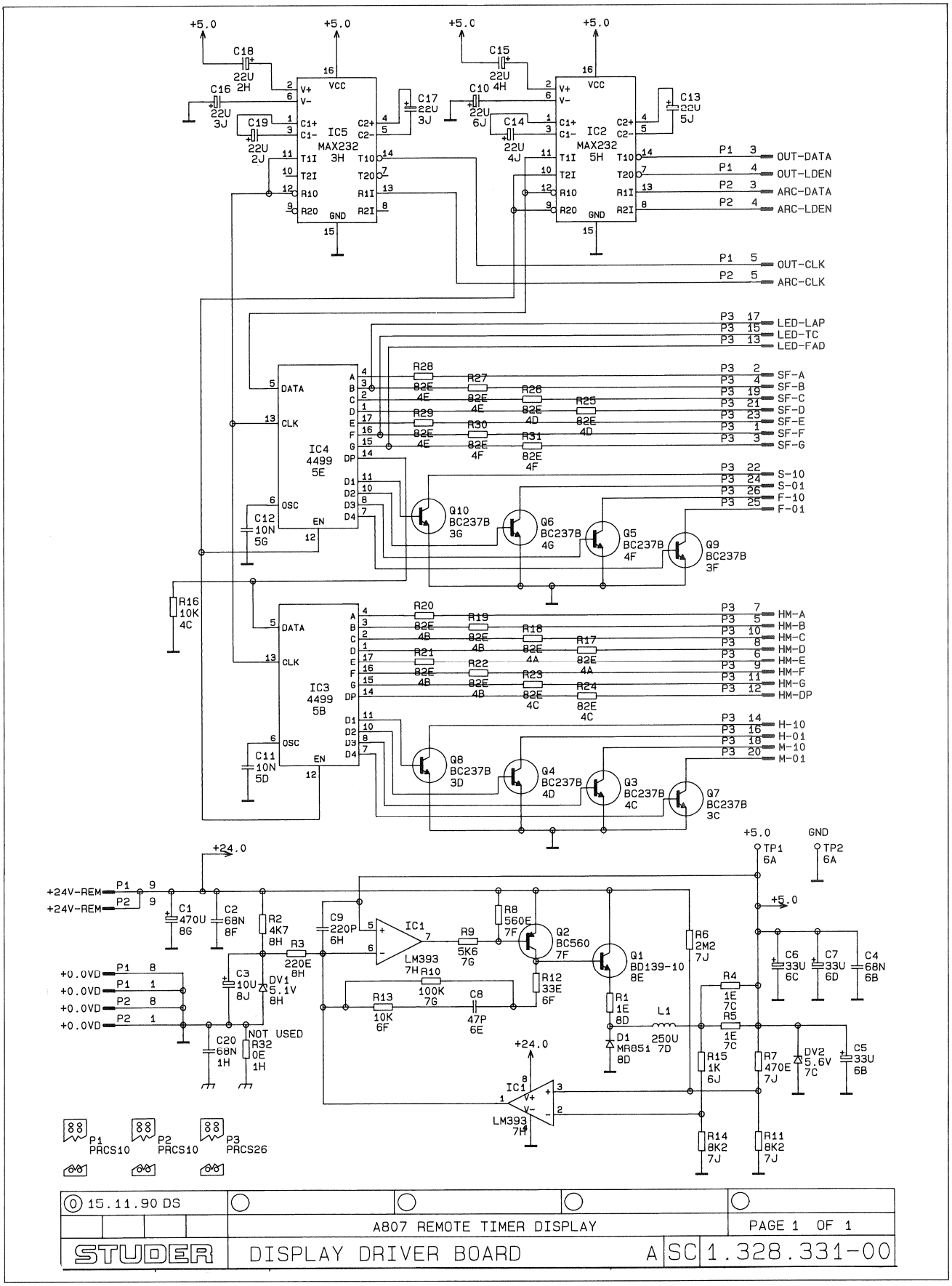

REMOTE TIMER DISPLAY 1.328.330.00
-DISPLAY DRIVER BOARD 1.328.331.00

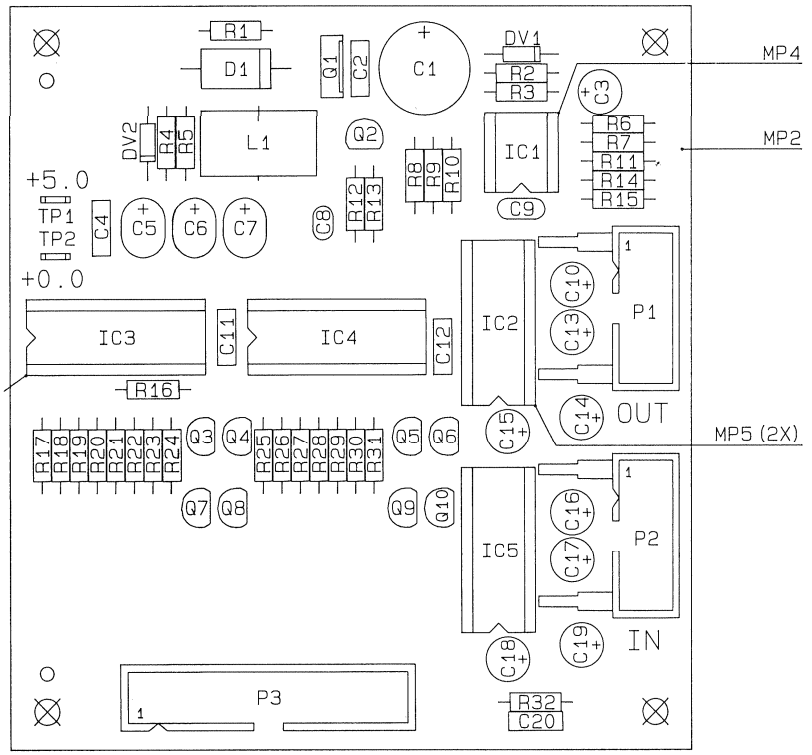

IND.	POS.NO.	PART NO.	VALUE	SPECIFICATIONS / EQUIVALENT	MANUF.
	C.....1	59.22.6471	470u	-20/+50 %, 40V	
	C.....2	59.06.0683	68n	10 %, 63V	
	C.....3	59.22.6100	10u	-20/+50 %, 35V	
	C.....4	59.06.0683	68n	10 %, 63V	
	C.....5	59.26.1330	33u	20 %, 10V	
	C.....6	59.26.1330	33u	20 %, 10V	
	C.....7	59.26.1330	33u	20 %, 10V	
	C.....8	59.34.2470	47p	5 %, 63V, N150	
	C.....9	59.34.4221	220p	5 %, 63V, N750	
	C....10	59.22.5220	22u	-20/+50 %, 25V	
	C....11	59.06.0103	10n	10 %, 63V	
	C....12	59.06.0103	10n	10 %, 63V	
	C....13	59.22.5220	22u	-20/+50 %, 25V	
	C....14	59.22.5220	22u	-20/+50 %, 25V	
	C....15	59.22.5220	22u	-20/+50 %, 25V	
	C....16	59.22.5220	22u	-20/+50 %, 25V	
	C....17	59.22.5220	22u	-20/+50 %, 25V	
	C....18	59.22.5220	22u	-20/+50 %, 25V	
	C....19	59.22.5220	22u	-20/+50 %, 25V	
	C....20	59.06.0683	68n	10 %, 63V	
	D.....1	50.04.0509	MR851		Mot
	DV....1	50.04.1112	5.1V	5 %, 0.5W, Zener	
	DV....2	50.04.1108	5.6V	5 %, 0.5W, Zener	
	IC....1	50.05.0283	LM393	Dual Voltage Comparator	
	IC....2	50.15.0120	MAX232	Dual RS232 Transceiver	Max
	IC....3	50.07.0010	4499	7-Segment Decoder Driver	Mot
	IC....4	50.07.0010	4499	7-Segment Decoder Drive	Mot
	IC....5	50.15.0120	MAX232	Dual RS232 Transceiver	Mot
	L.....1	62.03.0005	250uH	1A, Toroidal Choke	To
	MP....1	1.328.331.10	0 pce	Nr. Label	ST
	MP....2	1.328.331.11	1 pce	DISPLAY DRIVER PCB	ST
	MP....3	43.01.0108	1 pce	ESE Warning Label	

IND.	POS.NO.	PART NO.	VALUE	SPECIFICATIONS / EQUIVALENT	MANUF.
	MP....4	53.03.0166	1 pce	IC-Socket 8-pin	
	MP....5	53.03.0168	2 pcs	IC-Socket 16-pin	
	MP....6	53.03.0175	2 pcs	IC-Socket 18-pin	
	P.....1	54.14.2101	10-P	MALE, Ribbon Cable Plug w/lock	
	P.....2	54.14.2101	10-P	MALE, Ribbon Cable Plug w/lock	
	P.....3	54.14.2003	26-P	MALE, Ribbon Cable Plug	
	Q.....1	50.03.0451	BD139-10	NPN, TO126-1	
	Q.....2	50.03.0496	BC560	PNP, TO92-1	
	Q.....3	50.03.0436	BC237B	NPN, TO92-1	
	Q.....4	50.03.0436	BC237B	NPN, TO92-1	
	Q.....5	50.03.0436	BC237B	NPN, TO92-1	
	Q.....6	50.03.0436	BC237B	NPN, TO92-1	
	Q.....7	50.03.0436	BC237B	NPN, TO92-1	
	Q.....8	50.03.0436	BC237B	NPN, TO92-1	
	Q.....9	50.03.0436	BC237B	NPN, TO92-1	
	Q....10	50.03.0436	BC237B	NPN, TO92-1	
	R.....1	57.11.3109	1E	1 %, 0.6W, MF	
	R.....2	57.11.3472	4k7	1 %, 0.6W, MF	
	R.....3	57.11.3221	220E	1 %, 0.6W, MF	
	R.....4	57.11.3109	1E	1 %, 0.6W, MF	
	R.....5	57.11.3109	1E	1 %, 0.6W, MF	
	R.....6	57.11.5225	2M2	5 %, 0.4W, MF	
	R.....7	57.11.3471	470E	1 %, 0.6W, MF	
	R.....8	57.11.3561	560E	1 %, 0.6W, MF	
	R.....9	57.11.3562	5k6	1 %, 0.6W, MF	
	R....10	57.11.3104	100k	1 %, 0.6W, MF	
	R....11	57.11.3922	9k2	1 %, 0.6W, MF	
	R....12	57.11.3330	33E	1 %, 0.6W, MF	
	R....13	57.11.3103	10k	1 %, 0.6W, MF	
	R....14	57.11.3822	8k2	1 %, 0.6W, MF	
	R....15	57.11.3102	1k	1 %, 0.6W, MF	
	R....16	57.11.3103	10k	1 %, 0.6W, MF	
	R....17	57.11.3820	82E	1 %, 0.6W, MF	
	R....18	57.11.3820	82E	1 %, 0.6W, MF	

IND.	POS.NO.	PART NO.	VALUE	SPECIFICATIONS / EQUIVALENT	MANUF.
	R....19	57.11.3820	82E	1 %, 0.6W, MF	
	R....20	57.11.3820	82E	1 %, 0.6W, MF	
	R....21	57.11.3820	82E	1 %, 0.6W, MF	
	R....22	57.11.3820	82E	1 %, 0.6W, MF	
	R....23	57.11.3820	82E	1 %, 0.6W, MF	
	R....24	57.11.3820	82E	1 %, 0.6W, MF	
	R....25	57.11.3820	82E	1 %, 0.6W, MF	
	R....26	57.11.3820	82E	1 %, 0.6W, MF	
	R....27	57.11.3820	82E	1 %, 0.6W, MF	
	R....28	57.11.3820	82E	1 %, 0.6W, MF	
	R....29	57.11.3820	82E	1 %, 0.6W, MF	
	R....30	57.11.3820	82E	1 %, 0.6W, MF	
	R....31	57.11.3820	82E	1 %, 0.6W, MF	
	R....32			not used	
	TP....1	54.02.0320	1-P	MALE, FLATPIN 2.8*0.8	AMP
	TP....2	54.02.0320	1-P	MALE, FLATPIN 2.8*0.8	AMP

MF= Metal Film

MANUFACTURER:

Mot= Motorola
To= Tokin
Max= Maxtor
ST= STUDER

ORIG 90/10/15

REMOTE TIMER DISPLAY 1.328.330.00
-DISPLAY BOARD 1.328.332.00

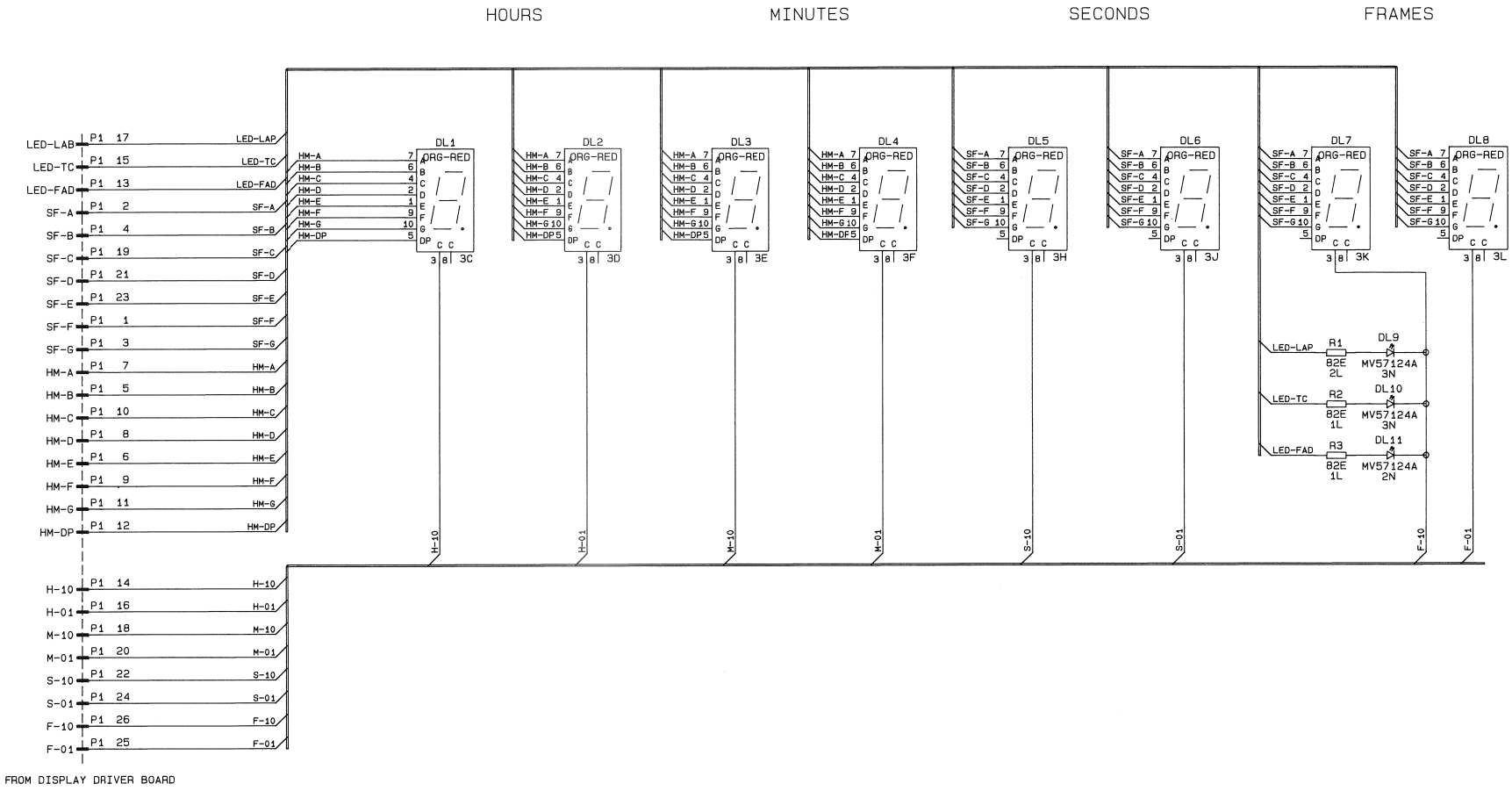

0 12.10.90 DS				
	A807 REMOTE TIMER DISPLAY			PAGE 1 OF 1
STUDER	DISPLAY BOARD		SC	1.328.332-00

REMOTE TIMER DISPLAY 1.328.330.00
-DISPLAY BOARD 1.328.332.00

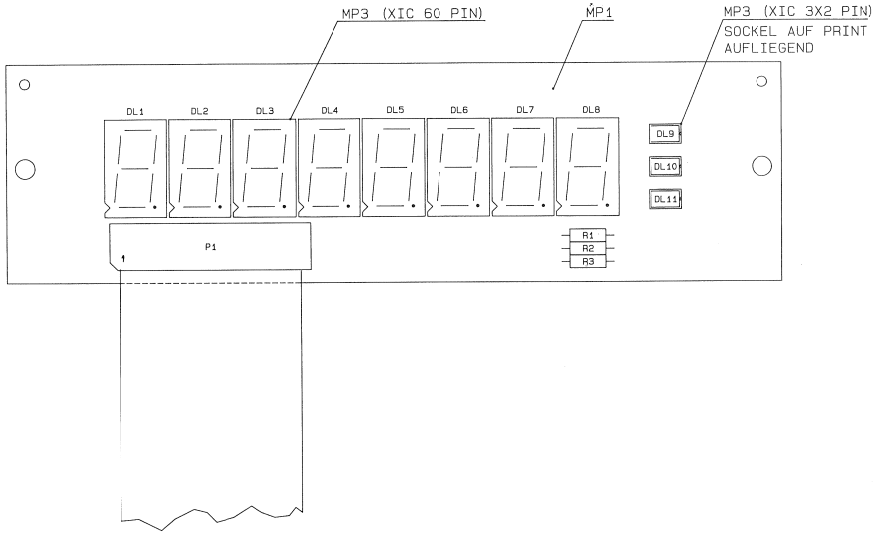

IND.	POS.NO.	PART NO.	VALUE	SPECIFICATIONS / EQUIVALENT	MANUF.
(00)	DL....1	73.01.0124	7-SEG	Common Anode, org	GI,HP
(01)	DL....1	73.01.0140	7-SEG	Common Cathode, org-red	GI,HP
(00)	DL....2	73.01.0124	7-SEG	Common Anode, org	GI,HP
(01)	DL....2	73.01.0140	7-SEG	Common Cathode, org-red	GI,HP
(00)	DL....3	73.01.0124	7-SEG	Common Anode, org	GI,HP
(01)	DL....3	73.01.0140	7-SEG	Common Cathode, org-red	GI,HP
(00)	DL....4	73.01.0124	7-SEG	Common Anode, org	GI,HP
(01)	DL....4	73.01.0140	7-SEG	Common Cathode, org-red	GI,HP
(00)	DL....5	73.01.0124	7-SEG	Common Anode, org	GI,HP
(01)	DL....5	73.01.0140	7-SEG	Common Cathode, org-red	GI,HP
(00)	DL....6	73.01.0124	7-SEG	Common Anode, org	GI,HP
(01)	DL....6	73.01.0140	7-SEG	Common Cathode, org-red	GI,HP
(00)	DL....7			not used	
(01)	DL....7			not used	
(00)	DL....8			not used	
(01)	DL....8			not used	
	DL....9	50.04.2119	MV57124A	LED red 6.35 * 3.81 mm	GI,Li
	DL...10	50.04.2119	MV57124A	LED red 6.35 * 3.81 mm	GI,Li
	DL...11	50.04.2119	MV57124A	LED red 6.35 * 3.81 mm	GI,Li
	MP....1	1.328.332.11	1 pce	DISPLAY PCB	ST
	MP....2	1.328.332.10	0 pce	No. Label	ST
	MP....3	53.03.0228	66 pce	XIC Single Wrap	
	P.....1	1.023.112.02	26-P	Flat-Cable w/Connector soldered on PCB	ST
	R.....1	57.11.3820	82E	0.6W, 1%, 0207, MF	
	R.....2	57.11.3820	82E	0.6W, 1%, 0207, MF	
	R.....3	57.11.3820	82E	0.6W, 1%, 0207, MF	

IND.	POS.NO.	PART NO.	VALUE	SPECIFICATIONS / EQUIVALENT	MANUF.

MF= Meta. Film

MANUFACTURER:

GI= General Instruments HP= Hewlett Packard
Li= Litos ST= STUDER

ORIG 90/10/15 (01) 91/01/28

REMOTE TIMER DISPLAY 1.328.330.00
-CONNECTION CABLE 15/9 POL. 15M 1.328.333.00

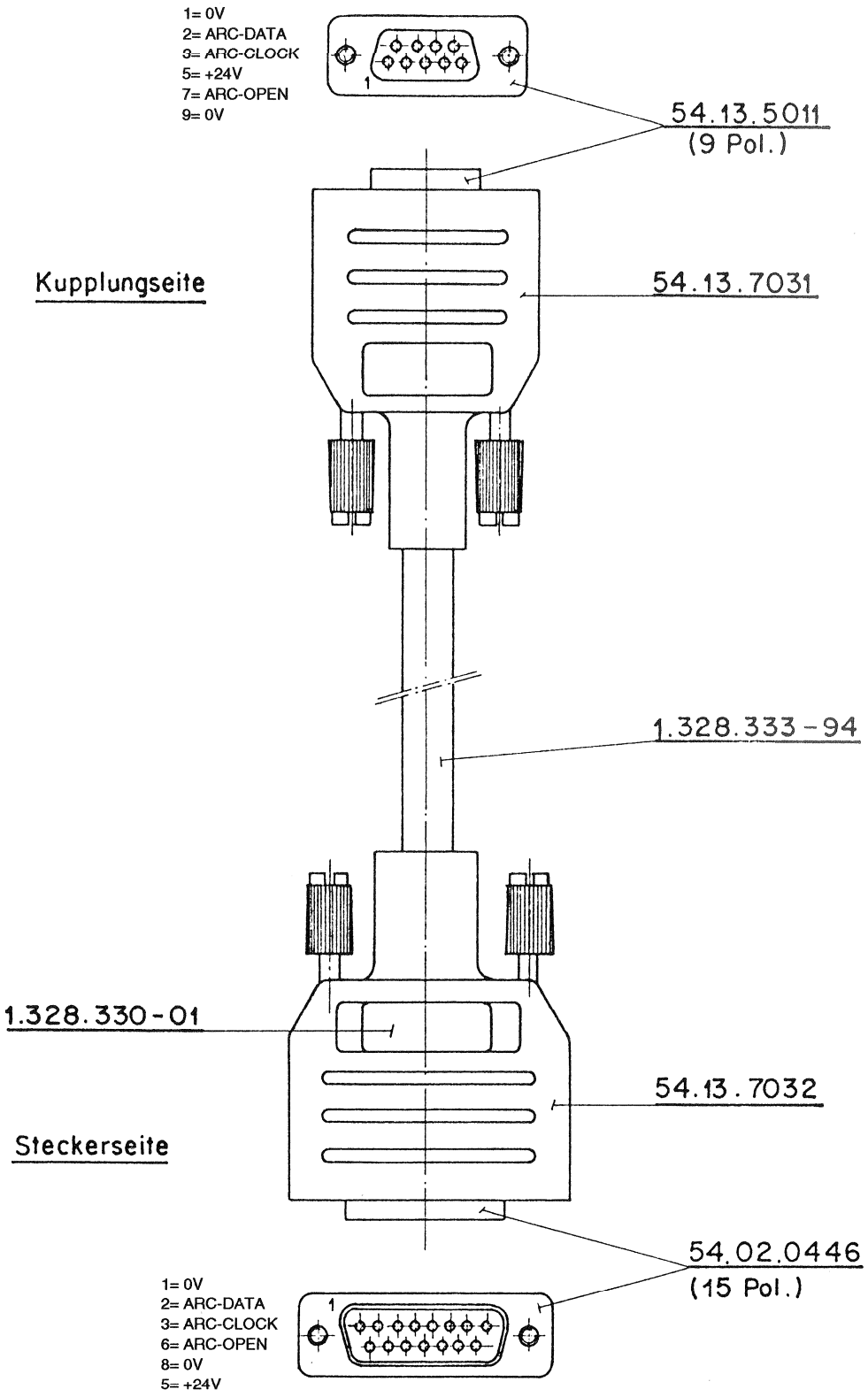

REMOTE TIME CODE DISPLAY 1.328.285.00

REMOTE TIME CODE DISPLAY 1.328.285.00

Index	Qty.	Order No.	Part Name	Specification
1	10	1.010.045.21	Screw black	M3x6
2	4	31.02.0211	Foot black	D16x6,5
3	1	1.328.285.03	Front cover	
4	1	1.328.285.04	Display window	
5	1	1.328.293.81	Connection cable 15m for connection to machine	
	1	1.023.140.12	Cable 0,12m flat, with 9pol D–Type male	

ACCESSORIES

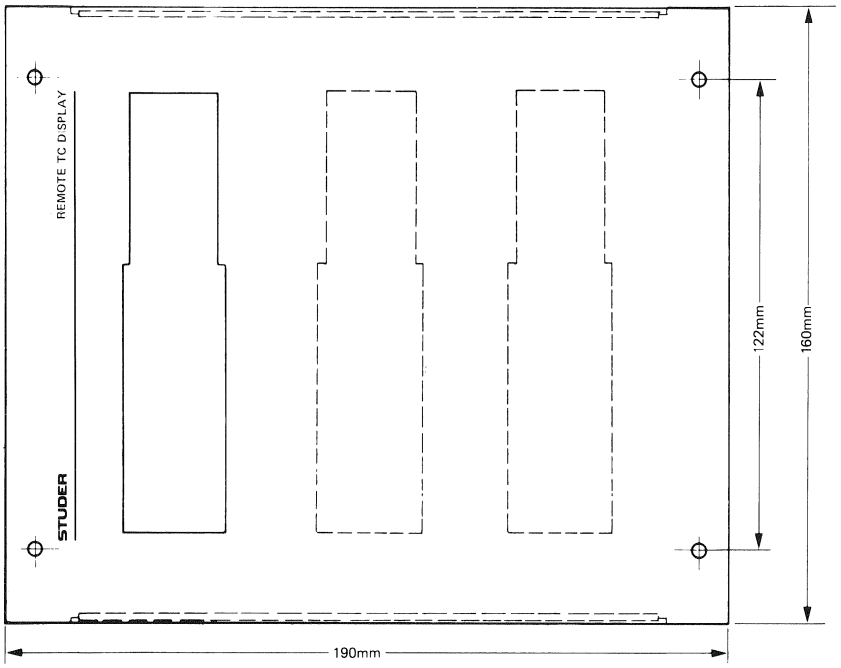

Index	Qty.	Order No.	Part Name	Specification
		1.328.285.31	Mounting frame for 1 display	
		1.328.285.32	Mounting frame for 2 displays	
		1.328.285.33	Mounting frame for 3 displays	
		1.010.043.21	Screw countersunk	M4x6

REMOTE TIME CODE DISPLAY 1.328.285.00
-TC DISPLAY DRIVER BOARD 1.328.284.20

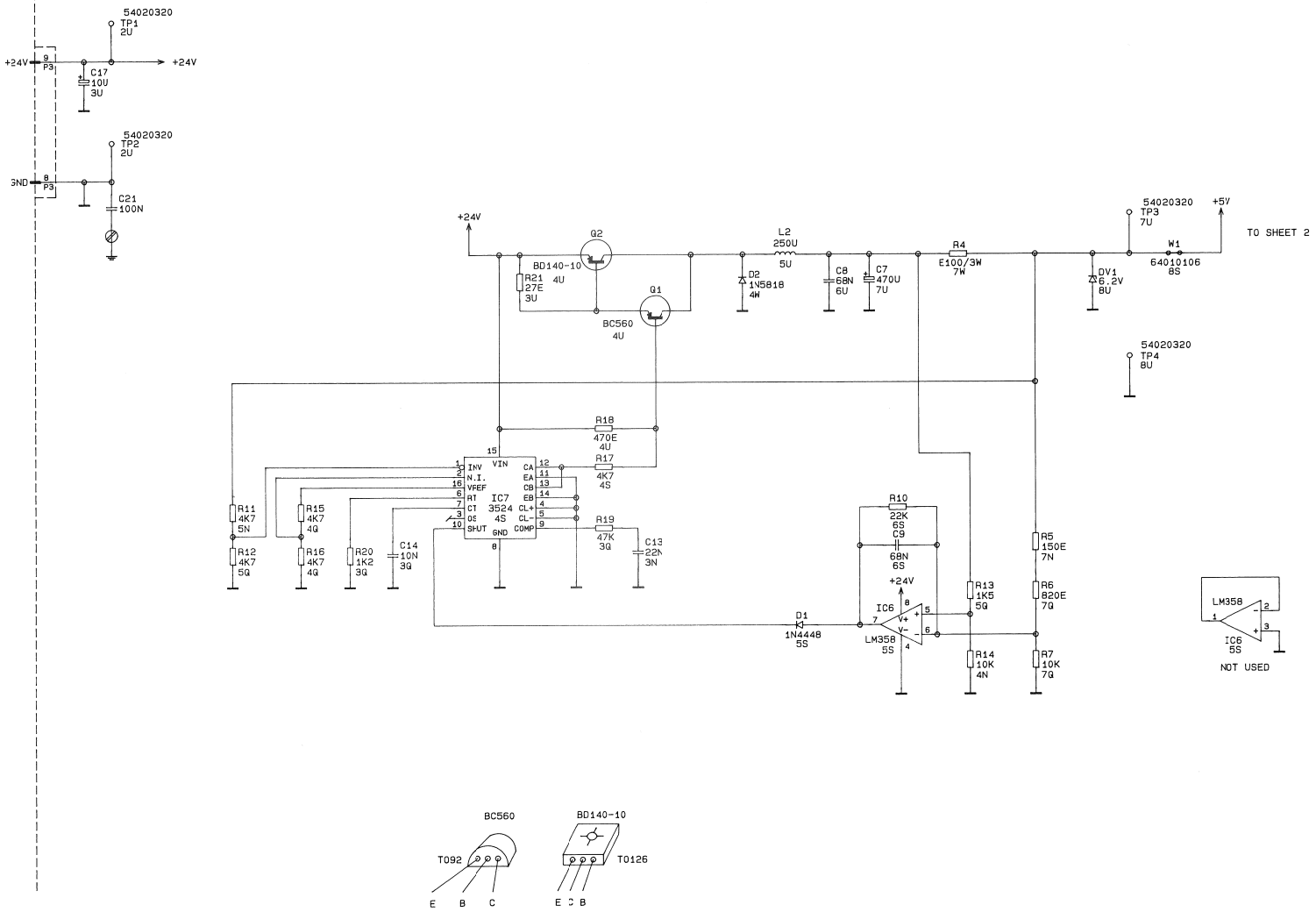

⓪ 08.01.90 MOT	① 22.05.91 MOT	○	○	○
		TIME CODE PROCESSOR A807		PAGE 1 OF 2
STUDER	TC DISPLAY DRIVER BOARD		SC	1.328.284.20

REMOTE TIME CODE DISPLAY 1.328.285.00
-TC DISPLAY DRIVER BOARD 1.328.284.20

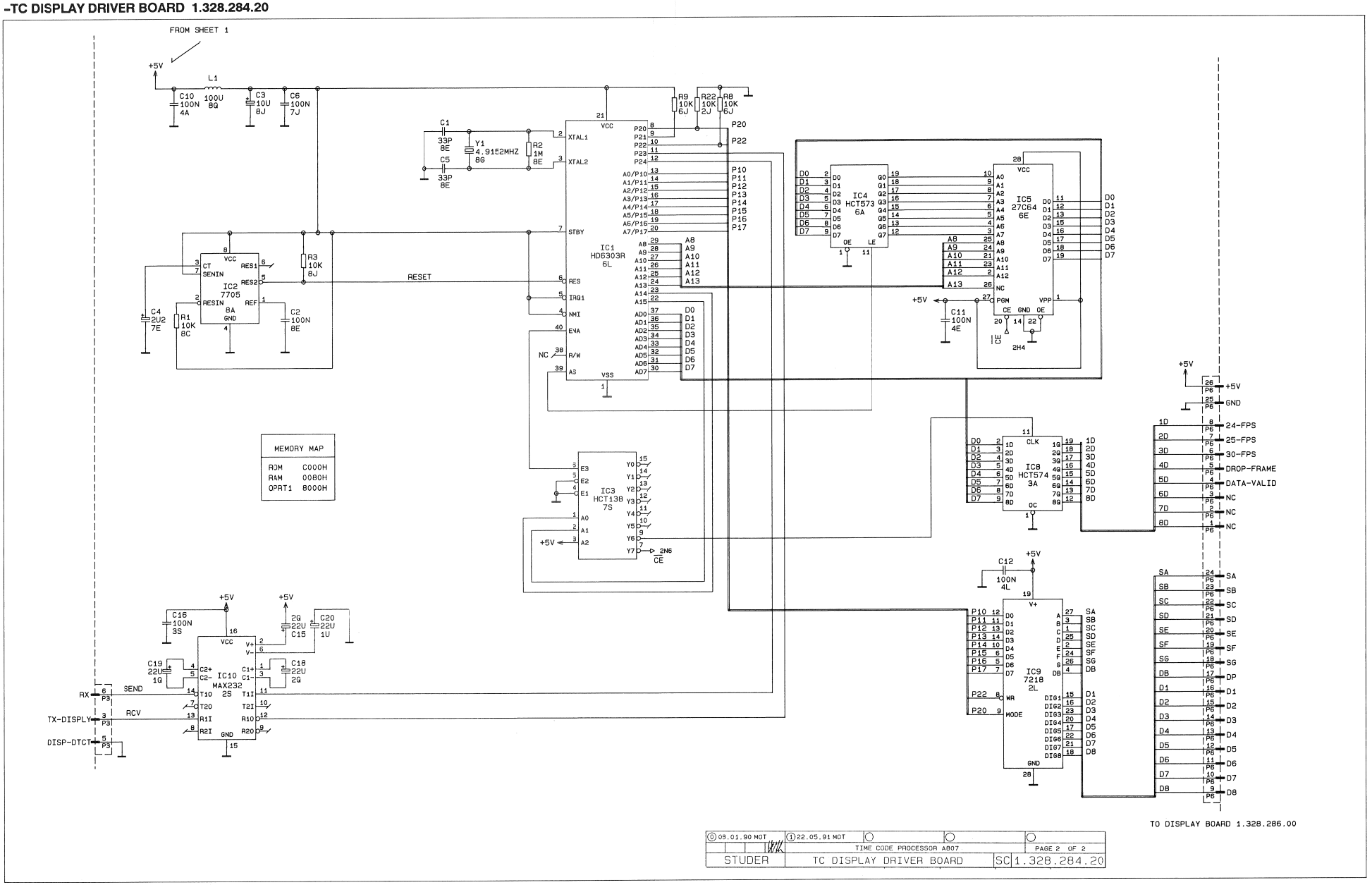

REMOTE TIME CODE DISPLAY 1.328.285.00
-TC DISPLAY DRIVER BOARD 1.328.284.20

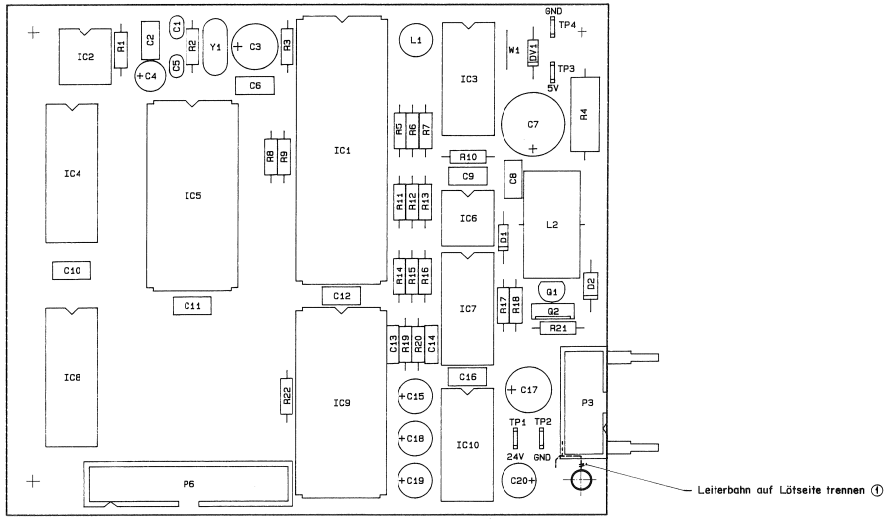

IND.	POS.NO.	PART NO.	VALUE	SPECIFICATIONS / EQUIVALENT	MANUF.
	C....1	59.34.2330	33 pF	10% 63 V CER	
	C....2	59.06.0104	0.1 uF	10% 63 V PETP	
	C....3	59.22.8100	10 uF	-20% 63 V EL	
	C....4	59.22.8229	2.2 uF	-20% 50 V EL	
	C....5	59.34.2330	33 pF	10% 63 V CER	
	C....6	59.06.0104	0.1 uF	10% 63 V PETP	
	C....7	59.22.6471	470 uF	-20% 40 V EL	
	C....8	59.06.0683	68 nF	10% 63 V PETP	
	C....9	59.06.0683	68 nF	10% 63 V PETP	
	C....10	59.06.0104	0.1 uF	10% 63 V PETP	
	C....11	59.06.0104	0.1 uF	10% 63 V PETP	
	C....12	59.06.0104	0.1 uF	10% 63 V PETP	
	C....13	59.06.0223	22 nF	10% 63 V PETP	
	C....14	59.06.0103	10 nF	10% 63 V PETP	
	C....15	59.22.6220	22 uF	-20% 35 V EL	
	C....16	59.06.0104	0.1 uF	10% 63 V PETP	
	C....17	59.22.8100	10 uF	-20% 63 V EL	
	C....18	59.22.6220	22 uF	-20% 35 V EL	
	C....19	59.22.6220	22 uF	-20% 35 V EL	
	C....20	59.22.6220	22 uF	-20% 35 V EL	
(02)	C....21	59.40.0104	0.1 uF	10% 63 V PETP see Note 1	
	D....1	50.04.0125	1N4448	50 V Si	
	D....2	50.04.0512	1N5818	30 V Schottky	
	DV....1	50.04.1118	6.2 V	Z-Diode 5% 0.5W	
	IC....1	50.16.0119	HD 6303 R	8-Bit CMOS MPU	Hi
	IC....2	50.11.0122	TL7705ACP	Reset Generator	TI/SGS
	IC....3	50.17.0138	74HCT138	3-to-8 Decoder/Demultiplexer	
	IC....4	50.17.0573	74HCT573	Octal D-Type Latch tri	
	IC....5	50.14.0155	27C64	EPROM. SW TC-Display 06/90, 1.727.713.20	ST
	IC....6	50.05.0286	LM 358	Dual OpAmp	
	IC....7	50.05.0279	IP 3524BN	Switching Regulator Contr.	IPS
	IC....8	50.17.0574	74HCT574	Octal D-Type Flip-Flop tri	
	IC....9	50.07.0035	ICM7218	8-Digit LED Driver	Int/Max
	IC....10	50.15.0120	MAX232CPE	Dual RS232 Transceiver	Max

IND.	POS.NO.	PART NO.	VALUE	SPECIFICATIONS / EQUIVALENT	MANUF.
	L....1	62.02.3101	100uH	HF-Choke 10%	TDK
	L....2	62.03.0025	250uH	Toroidal Choke	
	MP....1	43.01.0108	1 pce	ESE Warning Label	
	MP....2	1.101.001.20	1 pce	Text Label "Hardware -20"	ST
	MP....3	1.328.284.11	1 pce	TC DISPLAY DRIVER PCB	ST
	MP....4	1.328.284.10	1 pce	No. Label	ST
	P....3	54.14.2101	10-pole	Ribbon Connector with lock	
	P....6	54.14.2003	26-pole	Ribbon Connector	
	Q....1	50.03.0496	BC560	PNP-Transistor TO92-1	
	Q....2	50.03.0452	BD140-10	PNP-Transistor TO126-1	
	R....1	57.11.3103	10 kOhm	1%, 0.25W, MF	
	R....2	57.11.3105	1.0 MOhm	1%, 0.25W, MF	
	R....3	57.11.3103	10 kOhm	1%, 0.25W, MF	
	R....4	57.56.2100	0.1 Ohm	5%, 3 W, Wire	
	R....5	57.11.3151	150 Ohm	1%, 0.25W, MF	
	R....6	57.11.3821	820 Ohm	1%, 0.25W, MF	
	R....7	57.11.3103	10 kOhm	1%, 0.25W, MF	
	R....8	57.11.3103	10 kOhm	1%, 0.25W, MF	
	R....9	57.11.3103	10 kOhm	1%, 0.25W, MF	
	R....10	57.11.3223	22 kOhm	1%, 0.25W, MF	
	R....11	57.11.3472	4.7 kOhm	1%, 0.25W, MF	
	R....12	57.11.3472	4.7 kOhm	1%, 0.25W, MF	
	R....13	57.11.3152	1.5 kOhm	1%, 0.25W, MF	
	R....14	57.11.3103	10 kOhm	1%, 0.25W, MF	
	R....15	57.11.3472	4.7 kOhm	1%, 0.25W, MF	
	R....16	57.11.3472	4.7 kOhm	1%, 0.25W, MF	
	R....17	57.11.3472	4.7 kOhm	1%, 0.25W, MF	
	R....18	57.11.3471	470 Ohm	1%, 0.25W, MF	
	R....19	57.11.3473	47 kOhm	1%, 0.25W, MF	
	R....20	57.11.3122	1.2 kOhm	1%, 0.25W, MF	
	R....21	57.11.3270	27 Ohm	1%, 0.25W, MF	
	R....22	57.11.3103	10 kOhm	1%, 0.25W, MF	

IND.	POS.NO.	PART NO.	VALUE	SPECIFICATIONS / EQUIVALENT	MANUF.
	TP....1	54.02.0320		Plug 2.8*0.8	AMP
	TP....2	54.02.0320		Plug 2.8*0.8	AMP
	TP....3	54.02.0320		Plug 2.8*0.8	AMP
	TP....4	54.02.0320		Plug 2.8*0.8	AMP
(00)	W....1	57.11.3000		Wire-Bridge (0 Ohm Resistor)	
(01)	W....1	64.01.0106		Wire-Bridge	
	XIC...1	53.03.0172	40-Pole	IC Socket	
	XIC...2	53.03.0166	8-Pole	IC Socket	
	XIC...3	53.03.0168	16-Pole	IC Socket	
	XIC...4	53.03.0165	20-Pole	IC Socket	
	XIC...5	53.03.0173	28-Pole	IC Socket	
	XIC...6	53.03.0166	8-Pole	IC Socket	
	XIC...7	53.03.0168	16-Pole	IC Socket	
	XIC...8	53.03.0165	20-Pole	IC Socket	
	XIC...9	53.03.0173	28-Pole	IC Socket	
	XIC..10	53.03.0168	16-Pole	IC Socket	
	Y....1	89.01.0560	4.9152MHz	XTAL Parallel, Case HC49	

Note 1 = In Assembly 1.328.284 not included.

MF= Metal Film / CER= Ceramic / PETP= Polyester / EL= Electrolytic
Si= Silicon

MANUFACTURER: SGS= SGS-Thomson Max= Maxtrr
TI= Texas Instruments ST= STUDER
Int= Intersil Hi= Hitachi

ORIG 90/01/05 (01) 90/07/19 (02) 90/05/22

REMOTE TIME CODE DISPLAY 1.328.285.00
-DISPLAY BOARD 1.328.286.00

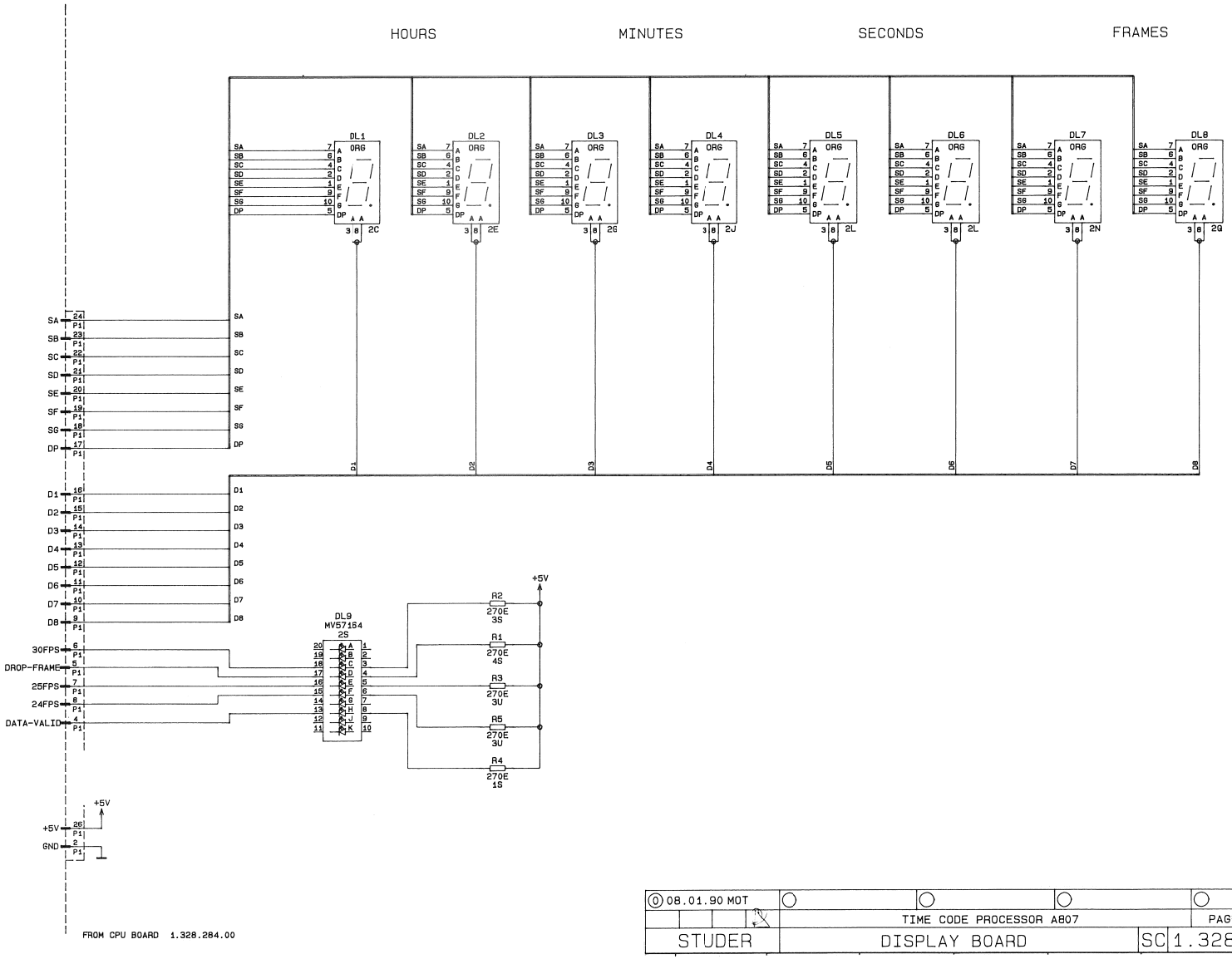

0 08.01.90 MOT				
	TIME CODE PROCESSOR A807			PAGE 1 OF 1
STUDER	DISPLAY BOARD		SC	1.328.286.00

REMOTE TIME CODE DISPLAY 1.328.285.00
-DISPLAY BOARD 1.328.286.00

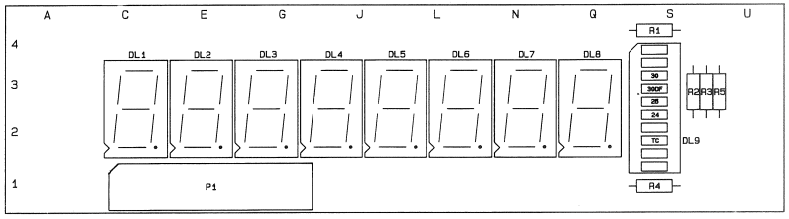

IND.	POS.NO.	PART NO.	VALUE	SPECIFICATIONS / EQUIVALENT	MANUF.
	DL....1	73.01.0124	MAN 6660	7-Segments, org, Brightness 'G'	GI
	DL....2	73.01.0124	MAN 6660	7-Segments, org, Brightness 'G'	GI
	DL....3	73.01.0124	MAN 6660	7-Segments, org, Brightness 'G'	GI
	DL....4	73.01.0124	MAN 6660	7-Segments, org, Brightness 'G'	GI
	DL....5	73.01.0124	MAN 6660	7-Segments, org, Brightness 'G'	GI
	DL....6	73.01.0124	MAN 6660	7-Segments, org, Brightness 'G'	GI
	DL....7	73.01.0124	MAN 6660	7-Segments, org, Brightness 'G'	GI
	DL....8	73.01.0124	MAN 6660	7-Segments, org, Brightness 'G'	GI
	DL....9	50.04.2150	MV 57164	LED Bar-Graph red/diff. 10 Segm.	GI
	MP....1	53.03.0210	100 pce	XIC Single Line, Print	Pr
	MP....2	1.328.286.10	1 pce	No. Label	ST
	MP....3	1.328.286.11	1 pce	Display PCB	ST
	P.....1	1.023.112.02		see note	ST
	R.....1	57.11.3271	270 Ohm	1%, 0.25W, MF	
	R.....2	57.11.3271	270 Ohm	1%, 0.25W, MF	
	R.....3	57.11.3271	270 Ohm	1%, 0.25W, MF	
	R.....4	57.11.3271	270 Ohm	1%, 0.25W, MF	
	R.....5	57.11.3271	270 Ohm	1%, 0.25W, MF	

MF= Metal Film

MANUFACTURER: GI= General Instruments / Pr= Precimation / ST= STUDER

Note : Connector 54.14.5026 (2 x 13 pins) from 26 wires flat cable
1.023.112.03 (100mm) is soldered on print.

ORIG 90/01/05

STUDER (00) 90/01/05 DS DISPLAY BOARD PL 1.328.286.00 PAGE 1

LABELS FOR 1.328.250.00 / 1.328.255.00 / 1.328.275.00

Labels for 1.328.250.00

1.011.210.02 1.011.210.02 1.011.210.03 1.011.210.04 1.011.210.05

1.011.210.07 1.011.210.08 1.011.210.09 1.011.210.14 1.011.210.15 1.011.210.45

Transparent Labels for 1.328.255.00

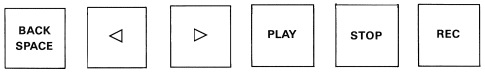

Labels set: 1.328.255.03

Labels for 1.328.275.00

1.011.210.14 1.011.210.15